FD2 Series
FlexDraper® Header with FM200 Float Module

Parts Catalog

262614 Revision A

Original Instruction

FD2 Series FlexDraper® Header with FM200 Float Module

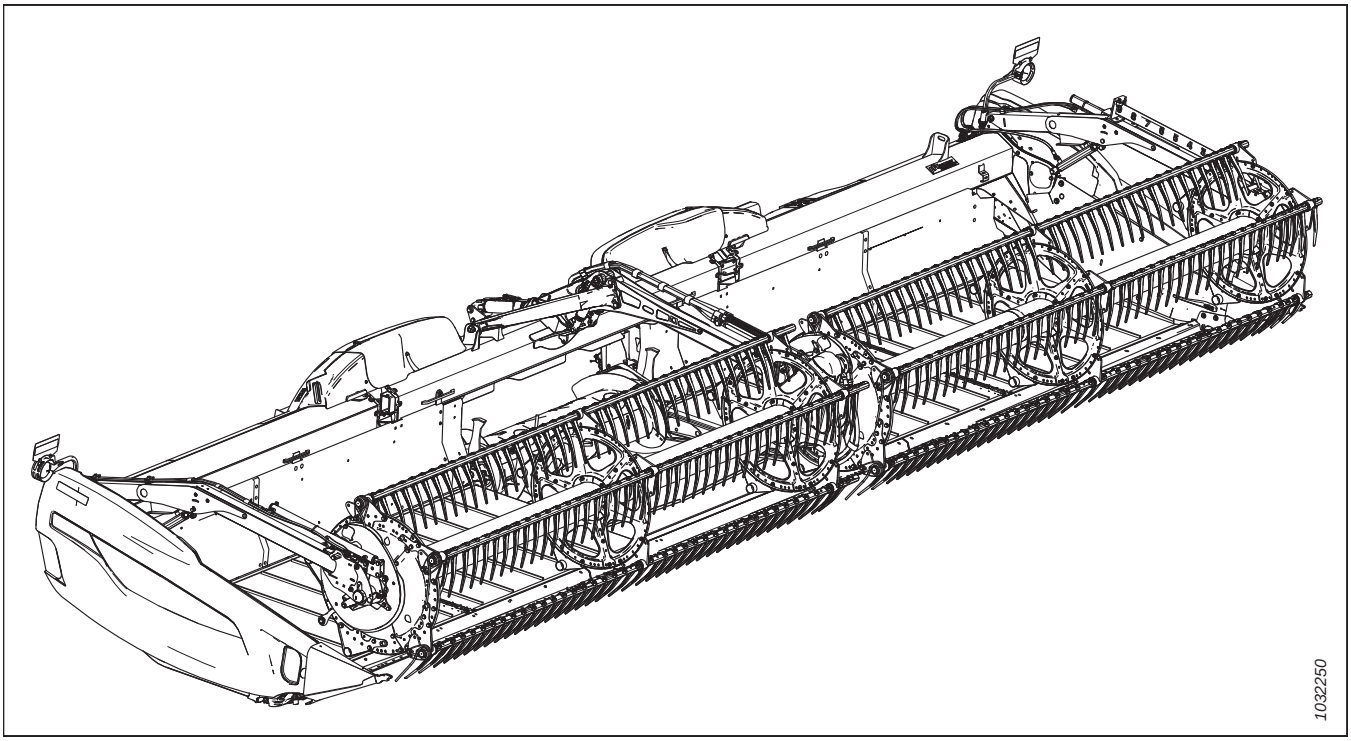

Published: March 2024

Introduction

This Parts Catalog lists all the replacement parts that can be ordered for a FD2 Series FlexDraper® Combine Header (Section *1 Header Frame Components, page 1* to *146 (Option) VertiBlade™ Vertical Knife Components, page 397*) and a FM200 Float Module (Section *147 Frame Components – Float Module, page 403* to *201 (Option) Stripper Bars, page 547*).

When ordering, be sure the complete and proper part number is given. Some parts vary with header size; be sure you are ordering the correct part number for your unit.

Bold text is used to indicate updates made at the current revision level. With each new revision of the catalog, previous revisions are returned to regular text.

Electrical connectors used on MacDon products are available for sale but not listed in this catalog. For the list of available connectors, refer to the Electrical Connectors Parts Catalog (MD #169641).

In this catalog, right and left are determined from the operator's seated position in the combine. An arrow is sometimes used in illustrations to indicate forward position.

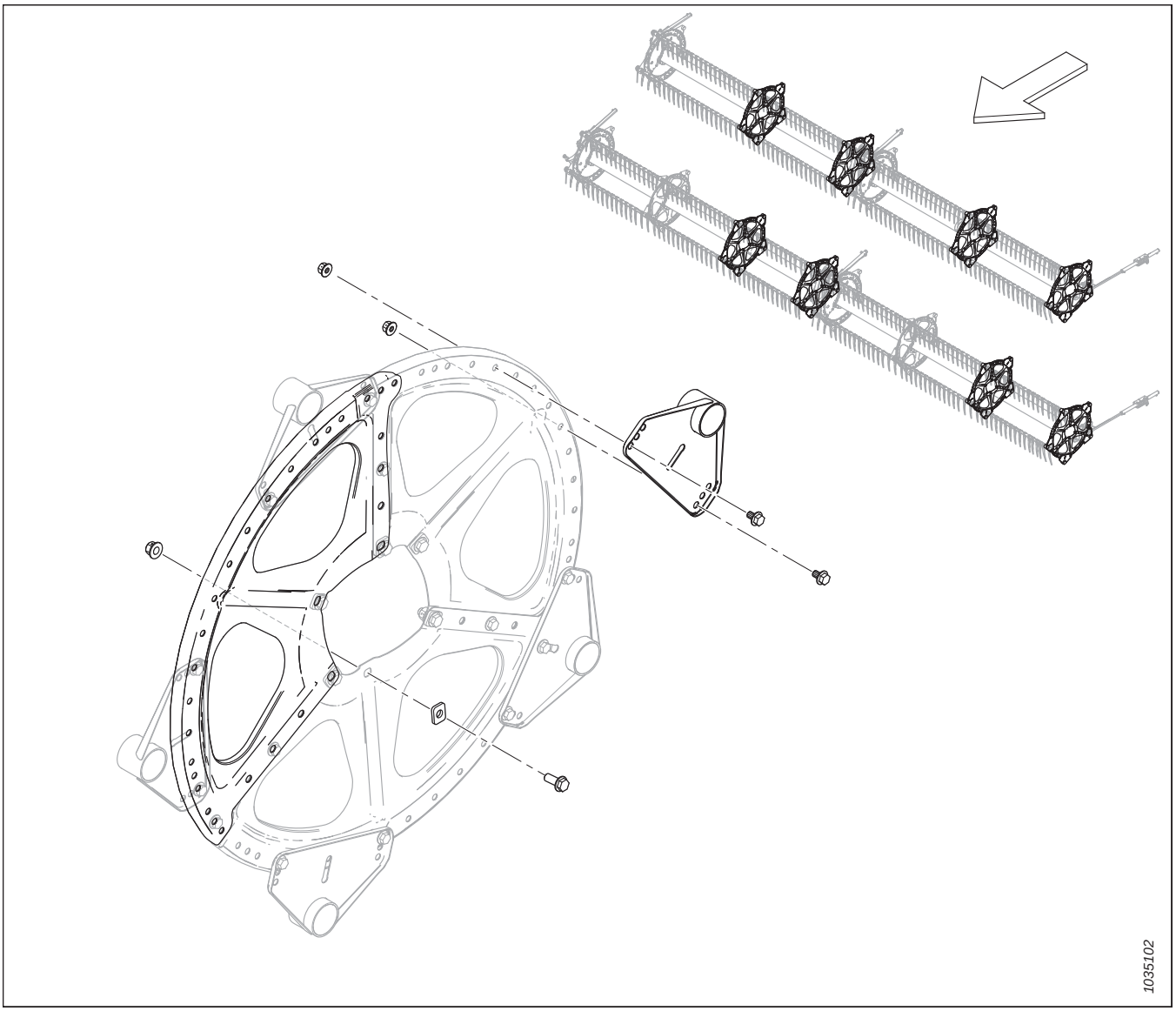

Abbreviations

A/R – as required (quantity varies)	ASSY – assembly	BHRN – button head rib neck
BV – ball valve	CCW – counterclockwise	CON – conical (spring washer)
CSK – countersink	C/W – complete with	CW – clockwise
DBLE – double	DK – double knife	DR – double reel
DT – distorted thread	FLG – flange	GA – gauge
GR – grade	GS – grass seed	HD – head
HDR – header	HFA – hydraulic fore-aft	HH – hex head
HNBR – hydrogenated nitrile butadiene rubber	HYD – hydraulic	I.D. – inside diameter
IP – internal plus (torx plus)	KP – knife pressure	KR – knife return
LG – long	LH – left hand (determined from Operator's position, facing forward)	LK – lock
MACH – machine	MD – MacDon	MFA – manual fore-aft
MY – model year	NC – national coarse thread	NF – national fine thread
NSS – not sold separately	NT – narrow transport	O.D. – outside diameter
OPT – optional	PO – pilot operated	PT – pull-type (mower conditioner)
RC – roller chain	REF – reference, part number called up elsewhere in catalog	REG – regular
RH – right hand (determined from Operator's position, facing forward)	RHSN – round head, square neck or square neck carriage bolt	RHSSN – round head, short, square neck
RTD – rotating tine drum	SAE – Society of Automotive Engineers (part produced to comply with)	SD – side draper
SER – serrated	SK – single knife	SKT HD – socket head
SMTH – smooth	SMV – slow moving vehicle	SOCK – socket
SP – self-propelled (windrower) header	SPCL – special	SPH – spherical
SPI – serrations per inch (knife Sections)	SR – single reel	STL – steel (stainless)
STR – standard	STVR – Stover	TFL – thread full length
THD – thread	TR – triple reel	UCA – upper cross auger
UDK – untimed double knife	UNC – unified coarse thread	UNEF – unified extra fine thread
UNF – unified fine thread	UNS – unified special thread series	VK – veritcal knife
WF – wide frame	ZP – zinc plated	

Serial Number Breaks

The side of the serial number on which the dash (–) appears determines whether the part is used "up to" or "after" the serial number given.

Example:

- –451189 Used on machines up to and including serial number 451189
- 451190– Used on machines including and after serial number 451190

Summary of Changes – FD2 Series and FM200 (MD #262614 Rev. A)

This list covers changes made since the last revision (MD #262232 Rev. C).

Section	Summary of Change	Internal Use Only
2 Header Frame End Panels, page 3	Added end panels 360748 and 360749, and knife opening covers 360750 and 360751 for model year 2024 and later headers. Added footnotes and serial number breaks for clarity.	ECN 64181 Engineering
22 Draper Deflectors – Narrow, page 45	Added narrow deflectors 360520, 360521, 360754, and 360755 for model year 2024 and later headers. Added footnotes and serial number breaks for clarity.	ECN 64181 Engineering
27 Flex Linkage Shield – Triple Reel (FD245 and FD250), page 59	Reversed callouts 13 and 14 to properly reference triple-reel shield braces 319548 and 319549. Updated illustration from 1039360 to 1044260 to show changes.	Publications
109 (Option) Brace Tube Kits, page 281	Added new topic with new illustration 1044048.	ECN 64591
147 Frame Components – Float Module, page 403	Superseded LH cover 314928 with LH cover 378133.	ECN 65040
	Added plug fitting 158174 and added a footnote for clarity. Updated illustration from 1041780 to 1043889 to show changes.	ECN 65226
148 Pump, Gearbox, and Input Drive (Integrated Hydraulic System), page 405	Revised topic title.	ECN 65226
149 Pump Assembly (Integrated Hydraulic System), page 407	Revised topic title.	ECN 65226
150 Integrated Pump – Service Parts (Integrated Hydraulic System), page 409	Revised topic title.	ECN 65226
151 Pump, Gearbox, and Input Drive (Modular Hydraulic System), page 413	Added new topic with new illustration 1043910.	ECN 65226 ECN 65301 ECN 65332
152 Pump Assembly (Modular Hydraulic System), page 415	Added new topic with new illustration 1043923.	ECN 65226 ECN 65259 ECN 65307 ECN 65332
153 Gearbox Brace (Modular Hydraulic System), page 419	Added new topic with new illustration 1043929.	ECN 65226 ECN 65301 ECN 65307 ECN 65332
154 Gearbox Assembly, page 421	Added main drive gearbox 368761 for float modules with a modular hydraulic system, added footnotes throughout for clarity.	ECN 65226
176 Hydraulics – Center-Link and Header Tilt / Reel Fore-Aft, page 483	Replaced edge trim seal 254183 quantity of 1 with “A/R” and added a footnote for clarity. The seal is not required for units with newer float module frames.	ECN 65358
177 Hydraulics – Feed Deck (Integrated Hydraulic System), page 487	Revised topic title.	ECN 65226

Section	Summary of Change	Internal Use Only
178 Hydraulics – Suction and Return (Integrated Hydraulic System), page 489	Revised topic title.	ECN 65226
	Added plug fitting 158174 and added a footnote for clarity. Updated illustration from 1032505 to 1044277 to show changes.	ECN 65358
179 Hydraulics – Feed Deck (Modular Hydraulic System), page 491	Added new topic with new illustration 1043993.	ECN 65226 ECN 65332
180 Hydraulics – Suction and Return (Modular Hydraulic System), page 495	Added new topic with new illustration 1043989.	ECN 65226 ECN 65332
181 Hydraulics – Drives and Float Module Manifold (Modular Hydraulic System), page 497	Added new topic with new illustration 1044000.	ECN 65226 ECN 65259 ECN 65332
182 Hydraulics – Drive Manifold Assembly, Service Parts (Modular Hydraulic System), page 501	Added new topic with new illustration 1044011.	ECN 65259 ECN 65332
183 Hydraulics – Double Reel, Float Module to Header Manifold (Integrated Hydraulic System), page 503	Revised topic title.	ECN 65226
184 Hydraulics – Triple Reel, Float Module to Header Manifold (Integrated Hydraulic System), page 505	Revised topic title.	ECN 65226
185 Hydraulics – Double Reel, Float Module to Header Manifold (Modular Hydraulic System), page 509	Added new topic with new illustration 1043944.	ECN 65226
186 Hydraulics – Triple Reel, Float Module to Header Manifold (Modular Hydraulic System), page 511	Added new topic with new illustration 1043945.	ECN 65226
187 Electrical – Base (Integrated Hydraulic System), page 515	Revised topic title.	ECN 65259
	Removed kit B7196.	Engineering
188 Electrical – Base (Modular Hydraulic System), page 517	Added new topic with new illustration 1044016.	ECN 65259 ECN 65307 ECN 65332
191 New Holland CR/CX – Float Module Completion, page 525	Superseded bundle B7043 with B7476. Superseded CNH transition frame assembly 347300 with 357567. Superseded anchor mount support 357678 with 284976. Added support 357606, adjustment plate 284971, and hardware. Updated illustration from 1034928 to 1044022 show changes.	ECN 63619 ECN 64609 ECN 64872

Section	Summary of Change	Internal Use Only
192 New Holland CR/CX – Hydraulic/Electrical Completion, page 527	Replaced integration harness 368376 with integrated electrical completion kit 284946, added a footnote for clarity.	ECN 64459
	Replaced hardware 134602 and 134603 with 134010 and 134011 in integrated electrical completion kit 284946; updated footnote to reflect changes.	ECN 65360
	Added transistor plug 349362. Updated illustration from 1041705 to 1044023 show changes.	ECN 64689

Introduction i
Abbreviations ii
Serial Number Breaks iii
Summary of Changes – FD2 Series and FM200 (MD #262614 Rev. A) iv

1 Header Frame Components 1
2 Header Frame End Panels 3
3 Header Frame – Split Frame Hardware 5
4 Manual Case, Retaining Pin, and Knife Storage 7
5 Transition Pan 9
6 Divider Cones 11
7 Divider Rods and Storage 13
8 Endshields – New Holland 15
9 Endshield Mount Components 17
10 Draper 21
11 Draper – Backsheet Panels (FD225) 23
12 Draper – Backsheet Panels (FD230, FD235, FD240, and FD241) 25
13 Draper – Backsheet Panels (FD245 and FD250) 27
14 Draper – Tensioner 29
15 Draper – Drive Roller 31
16 Draper – Decks and Tracks (FD225) 33
17 Draper – Decks and Tracks (FD230, FD235, FD240, and FD241) 35
18 Draper – Decks and Tracks (FD245 and FD250) 37
19 Draper – Seals (FD225) 39
20 Draper – Seals (FD230, FD235, and FD240) 41
21 Draper – Seals (FD241, FD245, and FD250) 43
22 Draper Deflectors – Narrow 45
23 Balance Linkage 47
24 Flex Linkage Shield – Backtube Hinge 53
25 Flex Linkage Shield – Single Reel (FD225) and Double Reel (FD230, FD235, FD240, and FD241) 55
26 Flex Linkage Shield – Triple Reel (FD240) 57
27 Flex Linkage Shield – Triple Reel (FD245 and FD250) 59
28 Guards, Hold-Downs, and Cutterbar Shoes – Single Knife, Pointed (FD225, FD230, FD235, and FD240) 61
29 Guards, Hold-Downs, and Cutterbar Shoes – Double Knife, Pointed (FD235, FD240, FD241, FD245, and FD250) 63
30 Guards, Hold-Downs, and Cutterbar Shoes – Single Knife, PlugFree™ (FD225, FD230, FD235, and FD240) 65
31 Guards, Hold-Downs, and Cutterbar Shoes – Double Knife, PlugFree™ (FD240, FD241, FD245, and FD250) 67
32 Knives – Single-Knife Headers (FD225) 69
33 Knives – Single-Knife Headers (FD230, FD235, and FD240) 73
34 Knives – Double-Knife Headers (FD235 and FD240) 77
35 Knives – Double-Knife Headers (FD241) 83
36 Knives – Double-Knife Headers (FD245) 87
37 Knives – Double-Knife Headers (FD250) 91
38 Knife Drive – Single and Double Knife 95
39 Knife Drive Box 97

40 Reel Support Arm and Lift Cylinders – Center Arm (FD230, FD235, FD240, and FD241) 99
41 Reel Support Arm and Lift Cylinders – Center Arm, Right Side (FD240, FD245, and FD250) 101
42 Reel Support Arm and Lift Cylinders – Center Arm, Left Side (FD240, FD245, and FD250) 103
43 Reel Support Arm and Lift Cylinders – Outer Arms, Single Reel 105
44 Reel Support Arm and Lift Cylinders – Outer Arms, Double and Triple Reel 107
45 Reel Arm Components – Right Arm, Single Reel (FD225) 109
46 Reel Arm Components – Right Arm, Double Reel (FD230, FD235, FD240, and FD241) 111
47 Reel Arm Components – Right Arm, Triple Reel (FD240, FD245, and FD250) 113
48 Reel Arm Components – Center Arm (FD230, FD235, FD240, FD241, FD245, and FD250) 115
49 Reel Arm Components – Center Right Arm, Triple Reel (FD240, FD245, and FD250) 117
50 Reel Arm Components – Left Arm (FD225, FD230, FD235, FD240, FD241, FD245, and FD250) 119
51 Reel – Drive, Right Arm, Single Reel 121
52 Reel – Drive, Center Arm, Double and Triple Reel 125
53 Reel – Cam Components, Right Arm 129
54 Reel – Cam Components, Center Right Arm, Triple Reel (FD240, FD245, and FD250) 131
55 Reel – Tine Tube 133
56 Reel Discs – Cam End and Linkage (FD225, FD230, FD235, FD240, FD241, FD245, and FD250) 137
57 Reel Discs – Mid Span, Cam Side (FD225, FD235, FD240, FD241, FD245, and FD250) 139
58 Reel Discs – Mid Span, Tail Side (FD225, FD230, FD235, FD240, FD241, FD245, and FD250) 141
59 Reel Discs – Tail End (FD225, FD230, FD235, FD240, FD241, FD245, and FD250) 143
60 Reel – Center Tubes, Single Reel 145
61 Reel – Center Tubes, Double Reel 147
62 Reel – Center Tubes, Triple Reel 149
63 Reel – Endshields, Cam End, Inboard 151
64 Reel – Endshields, Cam End, Outboard 153
65 Reel – Endshields, Tail End, Inboard 155
66 Reel – Endshields, Tail End, Outboard 157
67 Skid Shoes – End and Center 159
68 Hydraulics – Manifold Fittings and Fasteners 161
69 Hydraulics – Manifold Plugs 163
70 Hydraulics – Knife Drive, Single and Double Knife, Left Side (FD225, FD230, FD235, FD240, FD241, and FD245) 165
71 Hydraulics – Knife Drive, Double Knife, Left Side (FD250) 169
72 Hydraulics – Knife Drive, Double Knife, Right Side (FD235, FD240, and FD241) 173
73 Hydraulics – Knife Drive, Double Knife, Right Side (FD245 and FD250) 177
74 Hydraulics – Draper Drive (FD225, FD230, FD235, FD240, and FD241) 181
75 Hydraulics – Draper Drive (FD245 and FD250) 185
76 Hydraulics – Lift and Fore-Aft, Single Reel, Left Arm (FD225) 187
77 Hydraulics – Lift and Fore-Aft, Single Reel, Right Arm (FD225) 189
78 Hydraulics – Lift and Fore-Aft, Double Reel, Left Arm (FD230, FD235, FD240, and FD241) 193
79 Hydraulics – Lift and Fore-Aft, Double Reel, Center Arm (FD230, FD235, FD240, and FD241) 197
80 Hydraulics – Lift and Fore-Aft, Double Reel, Right Arm (FD230 and FD235) 199
81 Hydraulics – Lift and Fore-Aft, Double Reel, Right Arm (FD240 and FD241) 203

82 Hydraulics – Lift and Fore-Aft, Triple Reel, Left Arm (FD240, FD245, and FD250) 207
83 Hydraulics – Lift and Fore-Aft, Triple Reel, Center Arm, Left Side (FD240, FD245, and FD250) 211
84 Hydraulics – Lift and Fore-Aft, Triple Reel, Center Arm, Right Side (FD240, FD245, and FD250) 213
85 Hydraulics – Lift and Fore-Aft, Triple Reel, Right Arm (FD240, FD245, and FD250) 215
86 Hydraulics – Upper Cross Auger 219
87 Hydraulics – Reel Drive, Single Reel 223
88 Hydraulics – Reel Drive, Double and Triple Reel 227
89 Hydraulics – ContourMax™, Contour Wheels (FD225 and FD230) 231
90 Hydraulics – ContourMax™, Contour Wheels (FD235) 235
91 Hydraulics – ContourMax™, Contour Wheels (FD240, FD241, FD245, and FD250) 239
92 Hydraulics – VertiBlade™ Vertical Knife (FD225, FD230, FD235, FD241, and FD245) 243
93 Hydraulics – VertiBlade™ Vertical Knife (FD250) 247
94 Hydraulic Line Covers (FD225) 249
95 Hydraulic Line Covers (FD230, FD235, and FD240) 251
96 Hydraulic Line Covers (FD241, FD245, and FD250) 253
97 Electrical – Harness (FD225) 255
98 Electrical – Harness (FD230, FD235, FD240, FD241, FD245, and FD250) 257
99 Electrical – Clearance Lights 259
100 Electrical – Reel Height Sensor 261
101 Electrical – Reel Fore-Aft Sensor (2023 and Prior) 263
102 Electrical – Reel Fore-Aft Sensor (2024 and Later) 265
103 Decals and Reflectors – FD2 Series 267
104 Decals – Product Identification, New Holland 271
105 Decals – French 273
106 Decals – Portuguese 275
107 Decals – Russian 277
108 Decals – Spanish 279
109 (Option) Brace Tube Kits 281
110 (Option) ContourMax™ – Outer Contour Wheels 283
111 (Option) ContourMax™ – Inner Contour Wheels 289
112 (Option) ContourMax™ – Gauge Service Kit 293
113 (Option) ContourMax™ – Height Sensing – New Holland 295
114 (Option) Crop Lifters and Storage Rack 299
115 (Option) Divider Storage Bracket 301
116 (Option) EasyMove™ – Slow Speed Transport, Base Kit and Stabilizer Wheels 303
117 (Option) EasyMove™ – Slow Speed Transport, Wheels, Tires, and Tow Poles 311
118 (Option) Flex Linkage Stop Repair 315
119 (Option) Floating Crop Dividers 317
120 (Option) Four-Point Guard Kits, Single Knife 321
121 (Option) Four-Point Guard Kits, Double Knife 323
122 (Option) High Wear Skid Shoes 325
123 (Option) Lodged Crop Reel Fingers 327
124 (Option) Reel Tine Tube Conversion Kits – Double Reel, 5 Bat to 6 Bat 329

125 (Option) Reel Tine Tube Conversion Kits – Double Reel, 6 Bat to 9 Bat 333
126 (Option) Reel – Two Speed 337
127 (Option) Rice Divider Rods 339
128 (Option) Rock Retarder Kit 341
129 (Option) Service Kit – Pointed Guards, Coarse Knives 343
130 (Option) Service Kit – PlugFree™ Guards, Coarse Knives 345
131 (Option) Service Kit Plus – Single Knife 347
132 (Option) Service Kit Plus – Double Knife 351
133 (Option) Side Hill Stabilizer Kit 355
134 (Option) Stabilizer Wheels 357
135 (Option) Steel Finger Kit 361
136 (Option) Steel Reel End Finger Kits 363
137 (Option) Stubble Lights 365
138 (Option) Sunflower Attachment – Base Kit – Lean Bar and Deflectors 367
139 (Option) Sunflower Attachment – Base Kit – Pans and Supports 371
140 (Option) Sunflower Attachment – Deflector Kits (Double Reel) 373
141 (Option) Sunflower Attachment – Deflector Kits (Triple Reel) 375
142 (Option) Sunflower Attachment – Pans 379
143 (Option) Upper Cross Auger – Two-Piece Auger (FD225, FD230, FD235, and FD241) 381
144 (Option) Upper Cross Auger – Three-Piece Auger (FD240, FD245, and FD250) 387
145 (Option) VertiBlade™ Vertical Knife Kit 393
146 (Option) VertiBlade™ Vertical Knife Components 397
147 Frame Components – Float Module 403
148 Pump, Gearbox, and Input Drive (Integrated Hydraulic System) 405
149 Pump Assembly (Integrated Hydraulic System) 407
150 Integrated Pump – Service Parts (Integrated Hydraulic System) 409
151 Pump, Gearbox, and Input Drive (Modular Hydraulic System) 413
152 Pump Assembly (Modular Hydraulic System) 415
153 Gearbox Brace (Modular Hydraulic System) 419
154 Gearbox Assembly 421
155 Input Drive Assembly 425
156 Input Driveline and Support 427
157 Input Driveline and Support – High Angle 429
158 Input Driveline Conversion Kits 433
159 Auger Drum and Internal Components 435
160 Auger Assembly – Right Arm 437
161 Auger Assembly – Left Arm 441
162 Auger – Float Linkage 445
163 Auger Completion 447
164 Auger Conversion Kits – Fingers and Flighting 449
165 Auger – Crop Deflector Kits 451
166 Auger – Grease Lines 453
167 Float Linkage and Float Setting and Measuring 455

168 Float Lock Pivot Rework Kit 459
169 Float Springs 461
170 Float Module Attaching and Filler Components – FM200 to FD2 Series (2021 and Prior) 463
171 Float Module Attaching and Filler Components – FM200 to FD2 Series (2022 and Later) 467
172 Feed Deck – Frame, Pivot Pins, and Front Support 471
173 Feed Deck – Draper 473
174 Feed Deck – Drive/Idler Roller and Tensioner 475
175 Feed Deck – Pans and Fillers 479
176 Hydraulics – Center-Link and Header Tilt / Reel Fore-Aft 483
177 Hydraulics – Feed Deck (Integrated Hydraulic System) 487
178 Hydraulics – Suction and Return (Integrated Hydraulic System) 489
179 Hydraulics – Feed Deck (Modular Hydraulic System) 491
180 Hydraulics – Suction and Return (Modular Hydraulic System) 495
181 Hydraulics – Drives and Float Module Manifold (Modular Hydraulic System) 497
182 Hydraulics – Drive Manifold Assembly, Service Parts (Modular Hydraulic System) 501
183 Hydraulics – Double Reel, Float Module to Header Manifold (Integrated Hydraulic System) 503
184 Hydraulics – Triple Reel, Float Module to Header Manifold (Integrated Hydraulic System) 505
185 Hydraulics – Double Reel, Float Module to Header Manifold (Modular Hydraulic System) 509
186 Hydraulics – Triple Reel, Float Module to Header Manifold (Modular Hydraulic System) 511
187 Electrical – Base (Integrated Hydraulic System) 515
188 Electrical – Base (Modular Hydraulic System) 517
189 Electrical – FM200 to Combine Cab 519
190 Decals and Reflectors – FM200 523
191 New Holland CR/CX – Float Module Completion 525
192 New Holland CR/CX – Hydraulic/Electrical Completion 527
193 New Holland CR/CX – Auger Completion 531
194 New Holland CR/CX – Flighting Completion 533
195 New Holland CR/CX – Deflector Completion 535
196 New Holland 10 Volt Auto Header Height Control Adapter Kit 537
197 (Option) Auger Flighting Kits 539
198 (Option) FM200 Full Interface Filler – FD2 Series 541
199 (Option) FM200 Fillers and Links 543
200 (Option) Hillside Extension 545
201 (Option) Stripper Bars 547
Index 550

1 Header Frame Components

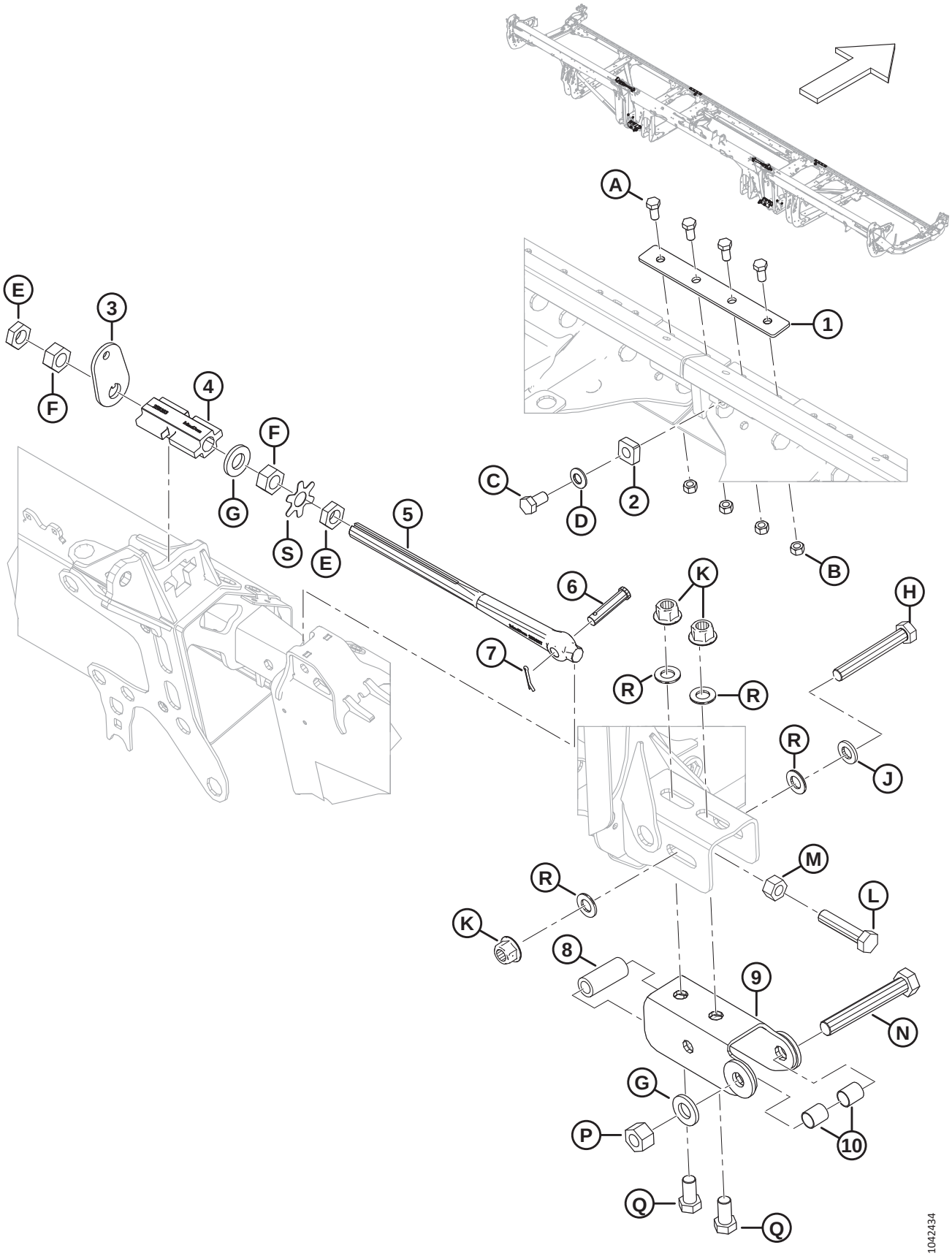

HEADER FRAME COMPONENTS

Ref	Part Number	Description	Qty	Serial Number
1	288438	BAR	2	
2	266277	STOP – HINGE	2	
3	258835	WASHER – WING LOCK	2	
4	258383	LOCK – MACHINED WING LOCK	2	
5	258637	LINK – LOCK LINK ADJ	2	
6	18704	PIN – CLEVIS, 15 MM X 68 MM OAL	2	
7	18607	PIN – COTTER 5/32 DIA X 1.5 ZP	2	
8	52129	SPACER	2	
9	312704	CHANNEL WELDT	2	
10	258843	BUSHING	4	
A	50155	BOLT – HEX HD TFL M12 X 1.75 X 25-8.8-AA1J		
B	184694	NUT – HEX M12 X 1.75-8-AA1J		
C	136143	BOLT – HEX HD TFL M16 X 2 X 30-10.9-AA1J		
D	184718	WASHER – CON SPRING M16 STL SAE 1050-1075		
E	136513	NUT – HEX THIN FINE M24 X 1.5-8-AA1J		
F	136512	NUT – HEX FINE M24 X 1.5-8-AA1J		
G	31774	WASHER – FLAT 1-1/8-30HRC-AC0C		
H	136887	BOLT – HEX HD M20 X 2.5 X 140-10.9		
J	21540	WASHER – HARD ASTM F436M20-340HV-AB2C		
K	136122	NUT – HEX FLG CTR LOC M20 X 2.5-10-AA1J		
L	320169	BOLT – HEX HD TFL M20 X 2.5 X 90-8.8-ZINC		
M	136124	NUT – HEX M20 X 2.5-10-AA1J		
N	320171	BOLT – HEX HD M24 X 3 X 160-10.9-ZINC		
P	136848	NUT – HEX TOP LOC M24 X 3-10-AA1J		
Q	252303	BOLT – HEX HD TFL M20 X 2.5 X 40-10.9-A3L		
R	136701	WASHER – NORDLOCK M20		
S	360835	PLATE – WASHER TAB M24 NUT		

2 Header Frame End Panels

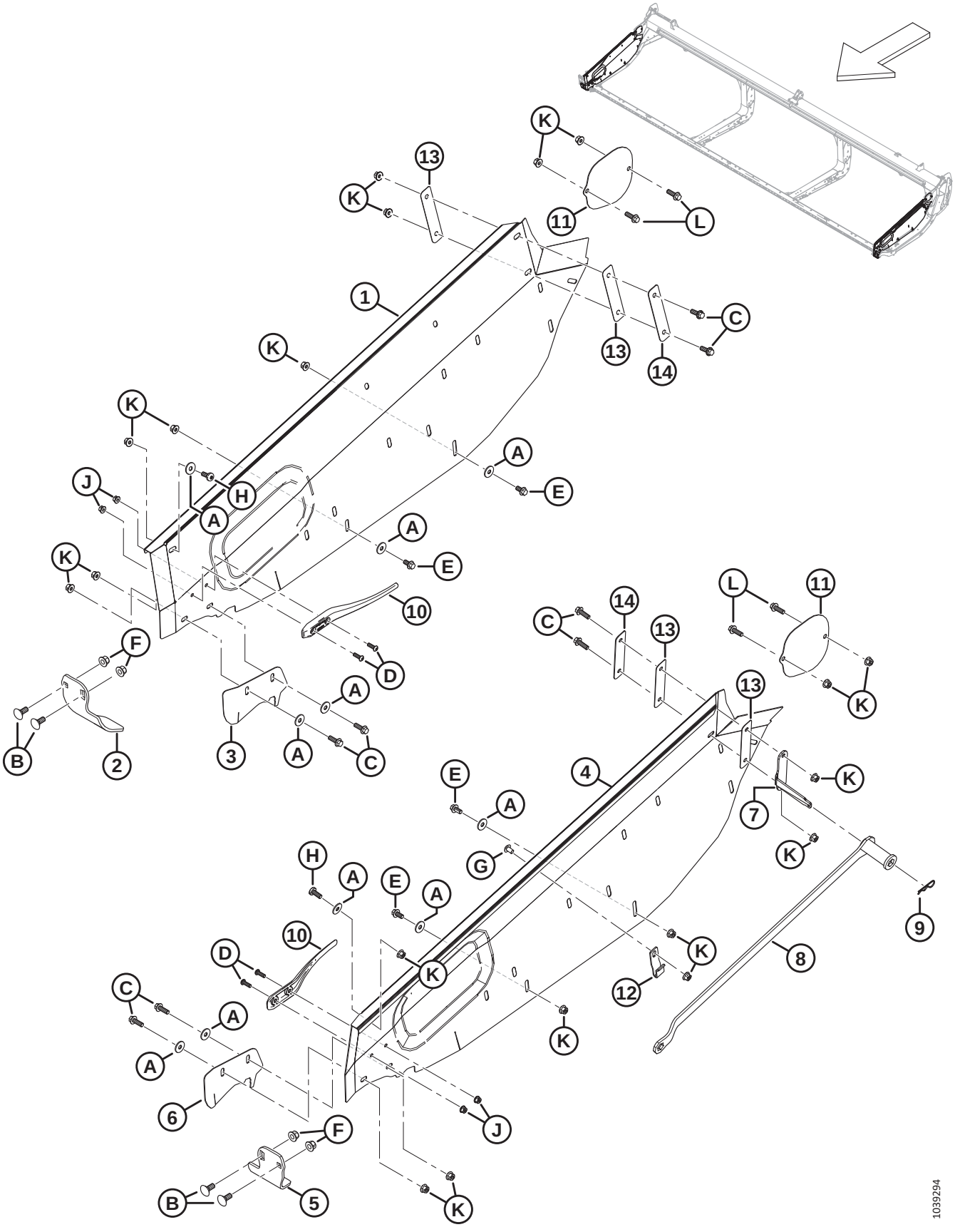

HEADER FRAME END PANELS

Ref	Part Number	Description	Qty	Serial Number
1	368226	END PANEL – RH **(2023 AND PRIOR)** [1]	**1**	**–486189**
	360749	**END PANEL – RH (2024 AND LATER)** [2]	**1**	**486190–**
2	289358	GUARD – RH KNIFE HEAD	1	
3	289349	COVER – RH KNIFE OPENING **(2023 AND PRIOR)** [3]	1	**–486189**
	360751	**COVER – RH KNIFE OPENING (2024 AND LATER)** [4]		**486190–**
4	368225	END PANEL – LH **(2023 AND PRIOR)** [1]	**1**	**–486189**
	360748	**END PANEL – LH (2024 AND LATER)** [2]	**1**	**486190–**
5	289220	GUARD – LH KNIFE HEAD	1	
6	289341	COVER – LH KNIFE OPENING **(2023 AND PRIOR)** [3]	1	**–486189**
	360750	**COVER – LH KNIFE OPENING (2024 AND LATER)** [4]		**486190–**
7	340122	BRACKET – WRENCH HOLDER	1	
8	360361	TOOL – HEADER ADJUSTER WELDT [5]	1	
9	13125	PIN – HAIR	1	
10	289742	DEFLECTOR – FINGER	2	
11	289261	SHIELD – UCA COVER	2	
12	340113	RETAINER – WRENCH FRONT	1	
13	340193	INSULATOR – HEADER PANELS [6]	4	
14	340215	PLATE [7]	2	
A	184712	WASHER – FLAT LARGE M10-200HV		
B	184667	BOLT – RHSN M12 X 1.75 X 30-8.8-ZINC		
C	184665	BOLT – HEX FLG HD M10 X 1.5 X 30-10.9-AA1J		
D	184649	SCREW – HEX SOC BTN HD M8 X 1.25 X 25		
E	152655	BOLT – HEX FLG HD M10 X 1.5 X 20-8.8-AA1J		
F	136431	NUT – HEX FLG CTR LOC M12 X 1.75-10		
G	136640	SCREW – TORX TRUSS HD M10 X 1.5 X 16 X SPCL-8.8-AA1J		
H	320304	SCREW – TORX TRUSS HD M10 X 1.5 X 25-SPCL-8.8-ZINC		
J	135337	NUT – HEX FLG CTR LK M8 X 1.25-8-AA1J		
K	135799	NUT – HEX FLG CTR LOC M10 X 1.5-10		
L	184661	BOLT – HEX HD TFL M10 X 1.5 X 30-8.8-AA1J		

1. Service part only for model year 2023 and prior headers.
2. Service part only for model year 2024 and later headers.
3. Service part only for model year 2023 and prior headers. Not recommended in all conditions; used primarily in rice and fine grasses to keep crop from getting caught in the delivery opening.
4. Service part only for model year 2024 and later headers. Not recommended in all conditions; used primarily in rice and fine grasses to keep crop from getting caught in the delivery opening.
5. Kit includes header adjuster tool (NSS) and instructions.
6. Two plastic washers (MD #150819) were previously used on the inboard side of the end panel.
7. Two large flat washers (MD #184712) were previously used on the inboard side of the end panels, between plastic washers (MD #150819) and M10 hex bolt (MD #184665).

3 Header Frame – Split Frame Hardware

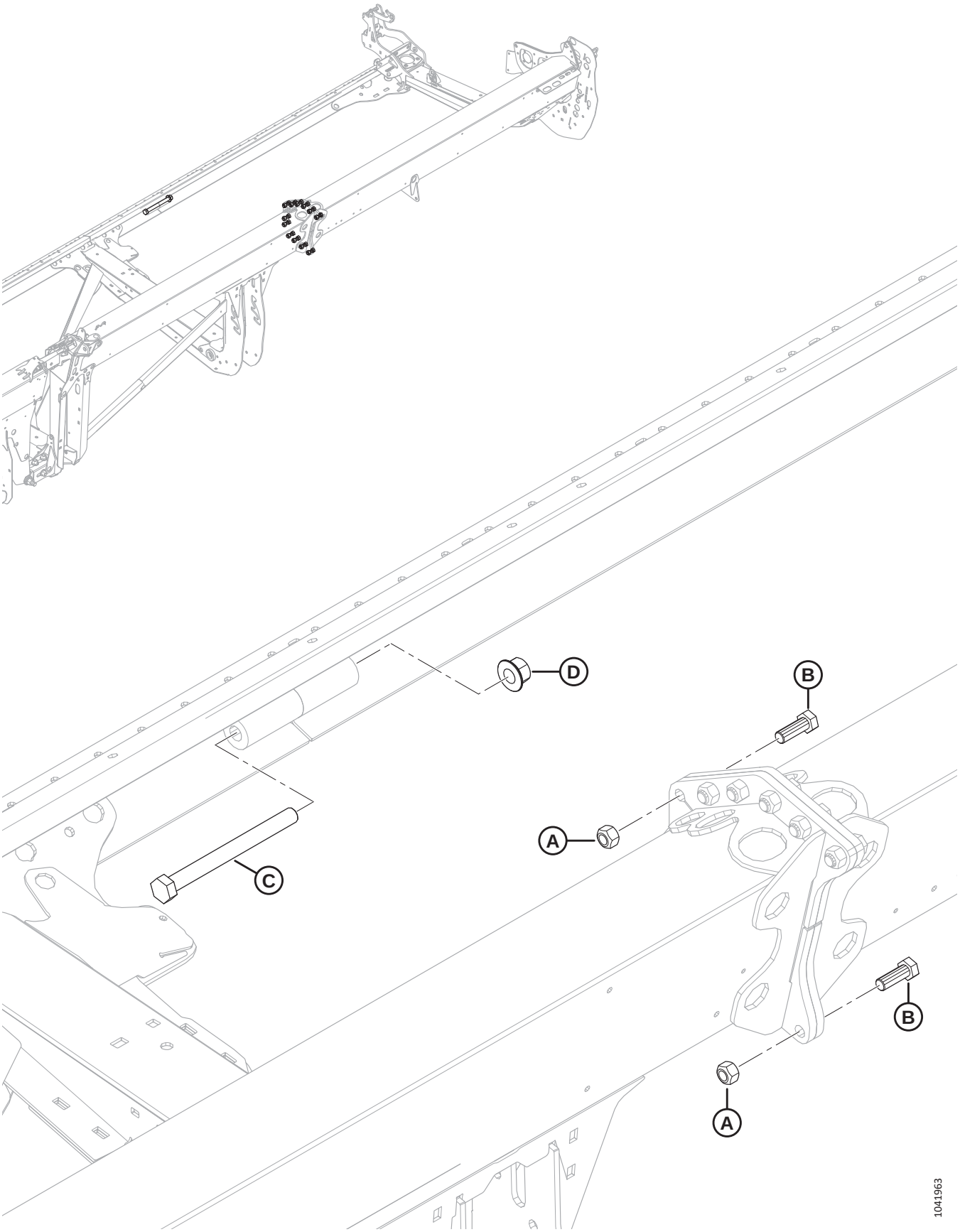

HEADER FRAME – SPLIT FRAME HARDWARE

Ref	Part Number	Description	Qty	Serial Number
A	320026	NUT – HEX TOP LOCK M16 X 2-10-ZINC		
B	136671	BOLT – HEX HD M16 X 2 X 45-10.9-ZINC		
C	252581	BOLT – HEX HD M20 X 2.5 X 220-10.9-AA1J		
D	136122	NUT – HEX FLG CTR LOC M20 X 2.5-10-AA1J		

4 Manual Case, Retaining Pin, and Knife Storage

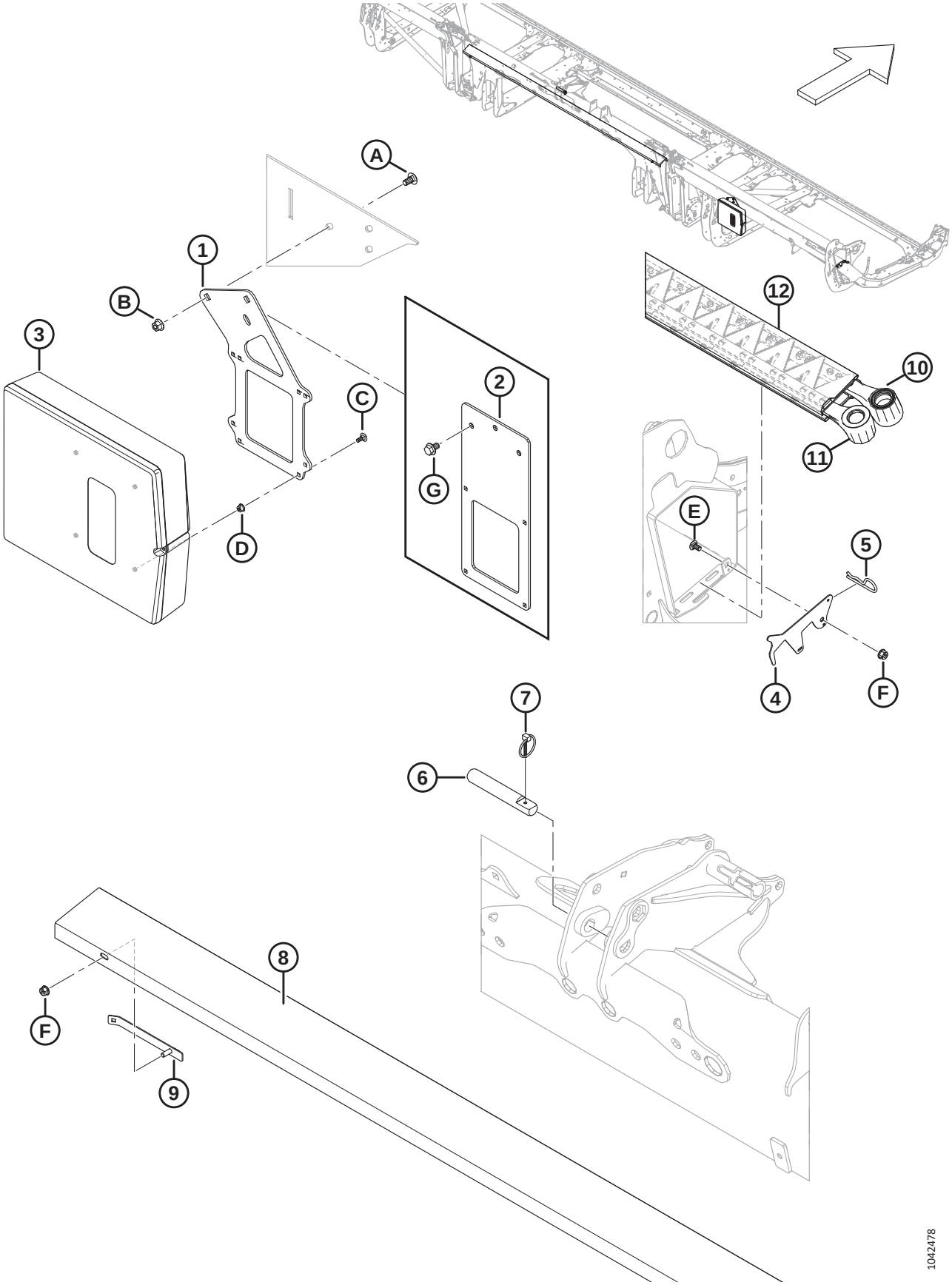

MANUAL CASE, RETAINING PIN, AND KNIFE STORAGE

Ref	Part Number	Description	Qty	Serial Number
1	360175	SUPPORT – MANUAL CASE [8]	1	
2	360176	SUPPORT – MANUAL CASE (FD225) [9]	1	
3	220107	CASE – MANUAL	1	
4	286741	LATCH – RETAINER, KNIFE STORAGE	1	
5	13125	PIN – HAIR	1	
6	313734	PIN – CENTER LINK [10]	1	
7	102264	PIN – LYNCH 3/16 X 1 9/16 IN	1	
8	286502	SUPPORT – SPARE KNIFE, SHORT (FD225, FD230, FD235, FD240, FD241) [11]	1	
	286503	SUPPORT – SPARE KNIFE, LONG (FD245 AND FD250) [12]	1	
9	286725	RETAINER WELDMENT, SPARE KNIFE SUPPORT	2	
10	REF	KNIFE – SPARE, SK [13]	1	
11	REF	KNIFE – SPARE, DK [14]	1	
12	NSS	SHIELD – KNIFE	A/R	
A	184657	BOLT – RHSSN M10 X 1.5 X 20-8.8-AA1J		
B	135799	NUT – HEX FLG CTR LOC M10 X 1.5-10		
C	136748	BOLT – RHSN M6 X 1 X 16-8.8-ZINC		
D	152668	NUT – HEX FLG CTR LOC M6 X 1-8		
E	191489	BOLT – RHSSN TFL M8 X 1.25 X 16-8.8-AA1J		
F	135337	NUT – HEX FLG CTR LK M8 X 1.25-8-AA1J		
G	136151	BOLT – HEX FLG HD TFL M10 X 1.5 X 16-8.8-AA1J [9]		

8. All headers except FD225.
9. FD225 headers only.
10. The center-link pin is used to hold the cylinder from the FM200 center-link; refer to Section *176 Hydraulics – Center-Link and Header Tilt / Reel Fore-Aft, page 483*.
11. Used for FD225, FD230, FD235, FD240, and FD241 headers only.
12. Used for FD245 and FD250 headers only.
13. For service parts, refer to Sections *32 Knives – Single-Knife Headers (FD225), page 69*, *33 Knives – Single-Knife Headers (FD230, FD235, and FD240), page 73*.
14. For service parts, refer to Sections *34 Knives – Double-Knife Headers (FD235 and FD240), page 77*, *35 Knives – Double-Knife Headers (FD241), page 83*, *36 Knives – Double-Knife Headers (FD245), page 87*, or *37 Knives – Double-Knife Headers (FD250), page 91*.

5 Transition Pan

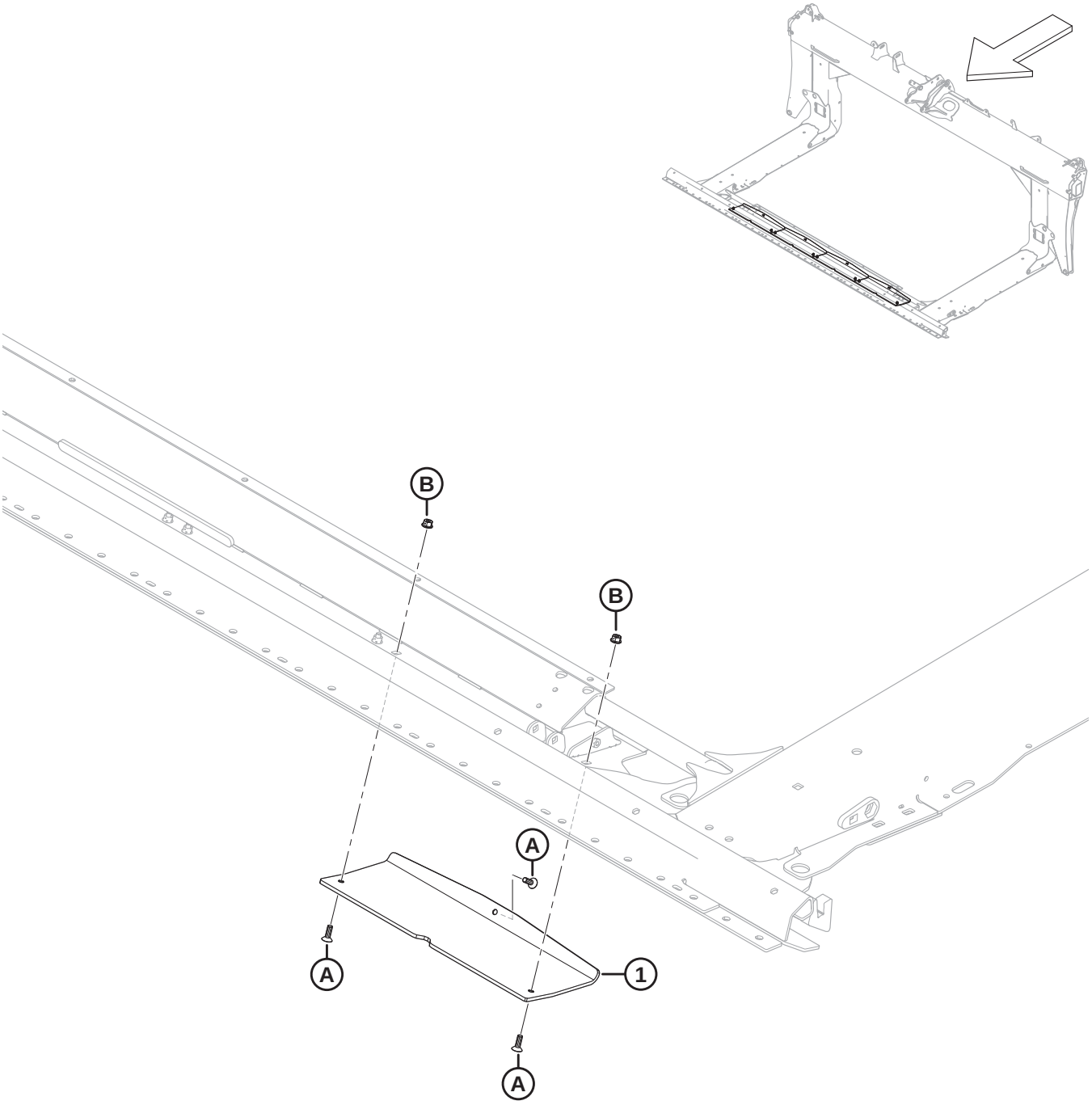

1032288

TRANSITION PAN

Ref	Part Number	Description	Qty	Serial Number
1	357797	SHOE – TRANSITION PAN SKID	4	
A	136492	SCREW – HEX SOC CSK HD TFL M8 X 1.25 X 25-10.9-AA1J		
B	135337	NUT – HEX FLG CTR LK M8 X 1.25-8-AA1J		

6 Divider Cones

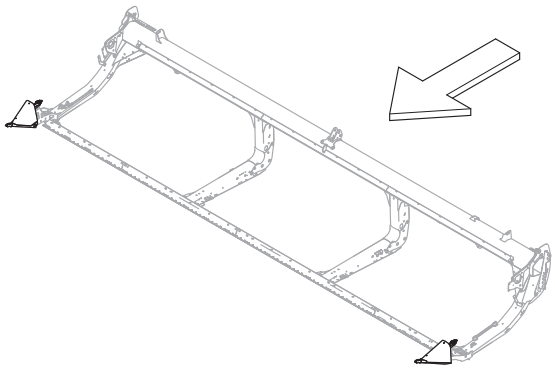

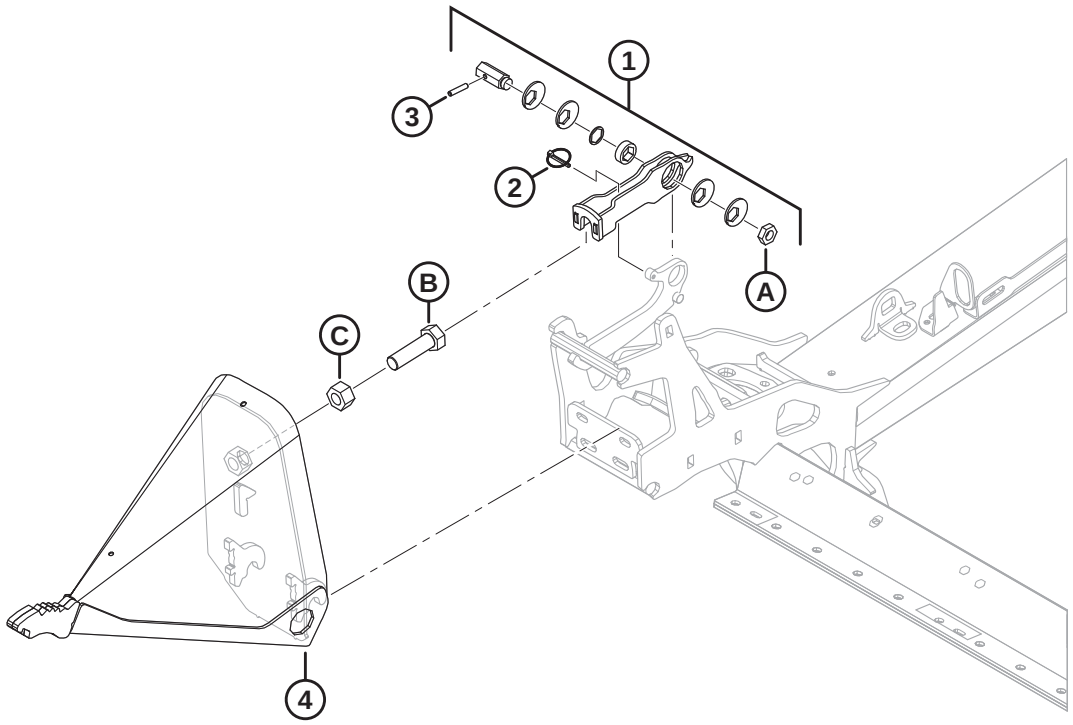

1032287

DIVIDER CONES

Ref	Part Number	Description	Qty	Serial Number
1	313767	KIT – DIVIDER LATCH [15]	2	
2	50193	PIN – LYNCH	2	
3	16266	PIN – SPRING 1/4 DIA X 1.25 LG	2	
4	289235	DIVIDER ASSEMBLY – LH [16]	1	
	289359	DIVIDER ASSEMBLY – RH [16]	1	
A	320218	NUT – HEX THIN M16 X 2-SPCL-5-ZINC		
B	136339	BOLT – HEX HD FINE TFL M20 X 1.5 X 70 X 8.8-ZINC		
C	136342	NUT – HEX FINE M20 X 1.5 X 10-AA3L		

15. The Divider Latch kit includes latch (NSS), lynch pin (MD #50193), spring pin (MD #16266), eccentric disc (NSS), bushing (NSS), hexagonal shaft (NSS), shim (NSS), latch (NSS), decals (MD #289762, MD #289763), and nut (MD #320218). For decals, refer to Section *103 Decals and Reflectors – FD2 Series, page 267*.
16. Includes bolt (MD #136339) and nut (MD #136342).

7 Divider Rods and Storage

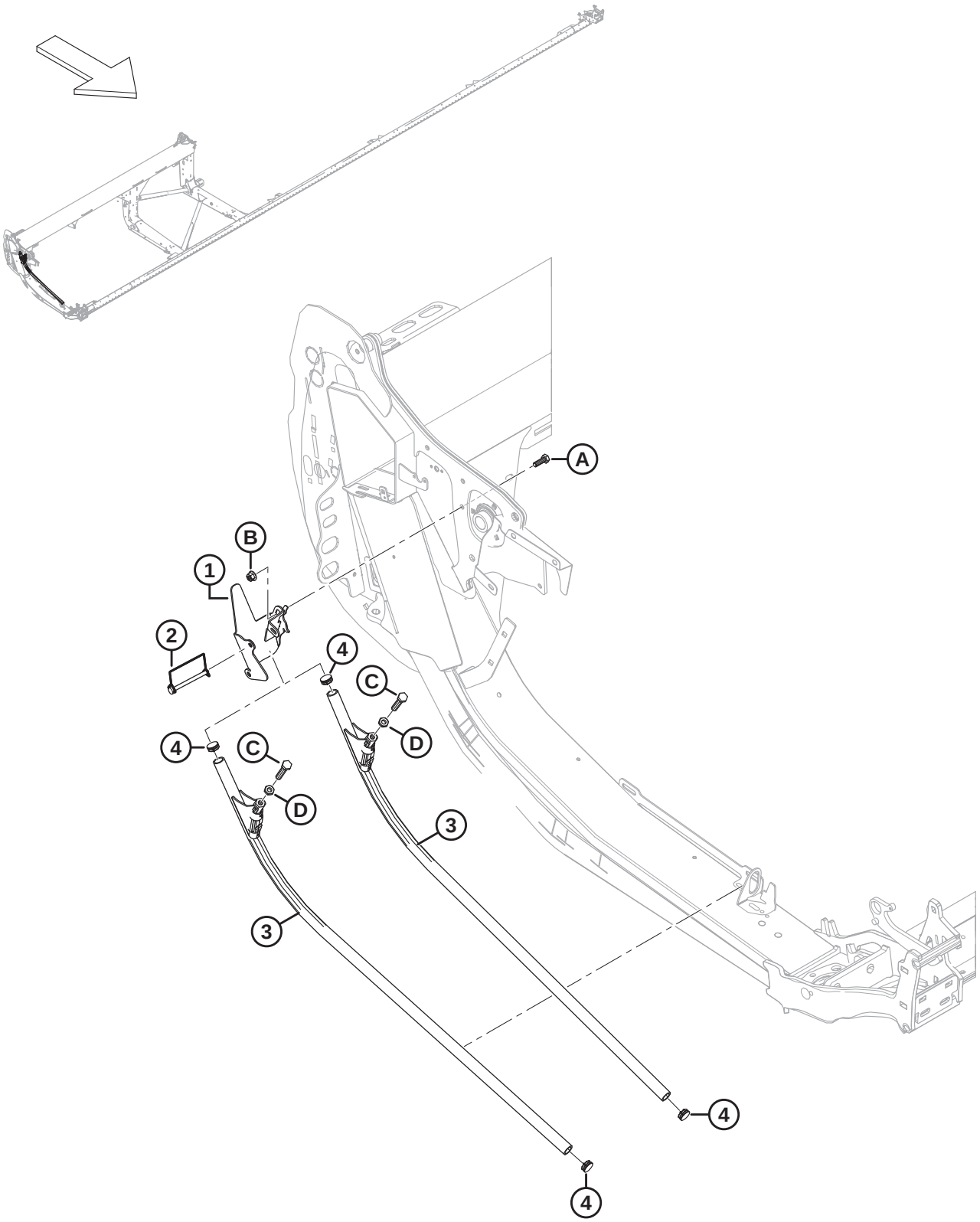

1038599

DIVIDER RODS AND STORAGE

Ref	Part Number	Description	Qty	Serial Number
1	360127	SUPPORT WELDT – ROD STORAGE	1	
2	136749	PIN – LYNCH	1	
3	289654	DIVIDER – ROD ASSY [17]	2	
4	335301	PLUG – PLASTIC, SNAP-IN	2	
A	184661	BOLT – HEX HD TFL M10 X 1.5 X 30-8.8-AA1J		
B	135799	NUT – HEX FLG CTR LOC M10 X 1.5-10		
C	252541	BOLT – HEX HD TFL M12 X 1.75 X 65-8.8-AA3L		
D	184696	NUT – HEX THIN M12 X 1.75-05-AA1J		

17. Includes bolt (MD #252541), nut (MD #184696), and two plugs (MD #335301).

8 Endshields – New Holland

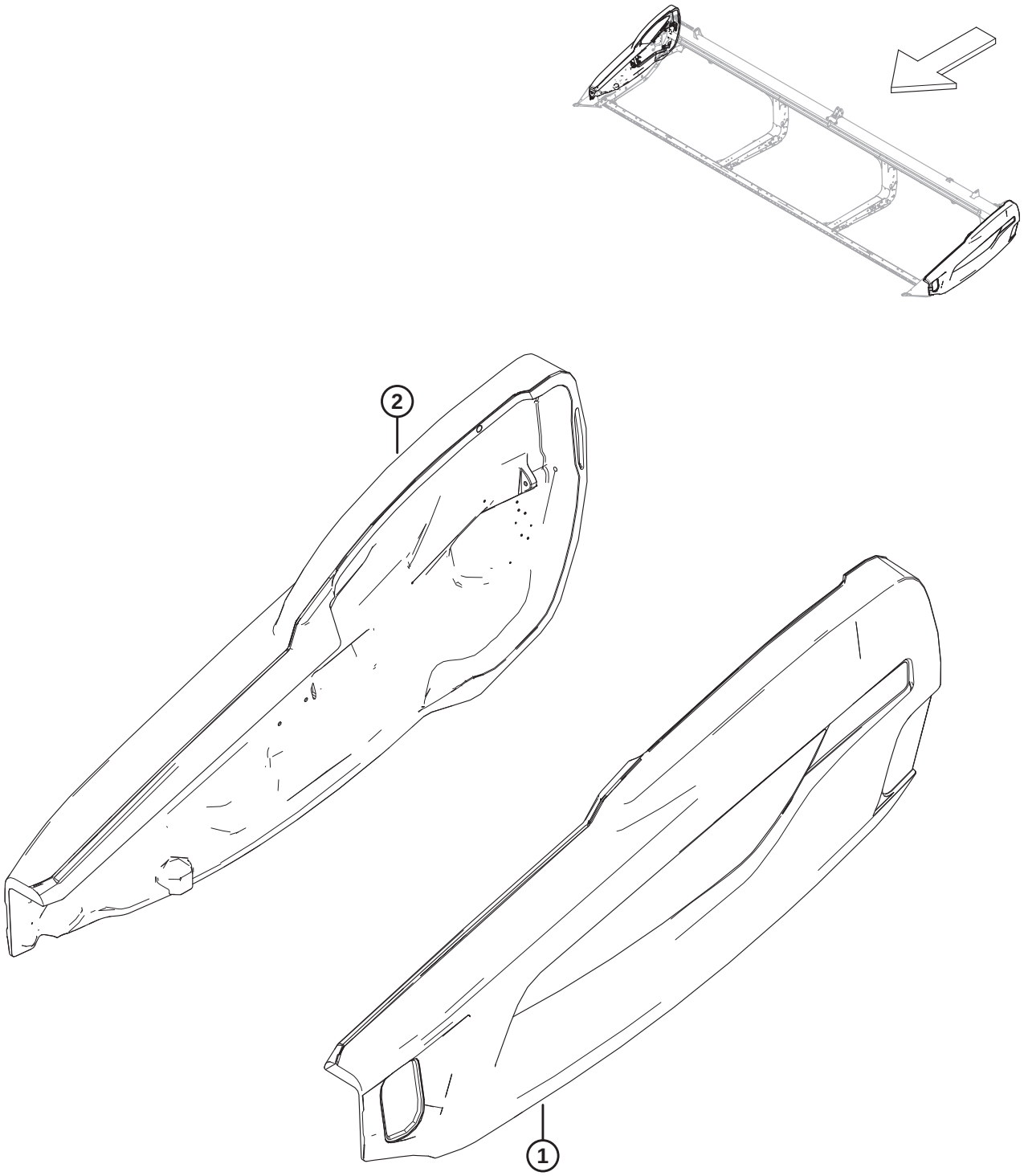

1039650

Ref	Part Number	Description	Qty	Serial Number
1	360553	SHIELD ASSY – NH YELLOW, LH [18]	1	
2	360449	SHIELD ASSY – NH YELLOW, RH [18]	1	
	165524	REFLECTOR – RED, 230 MM [19]		

18. Refer to Section *104 Decals – Product Identification, New Holland, page 271* for product identification decals.
19. Refer to Section *103 Decals and Reflectors – FD2 Series, page 267*. This reflector is used on the right endshield only.

9 Endshield Mount Components

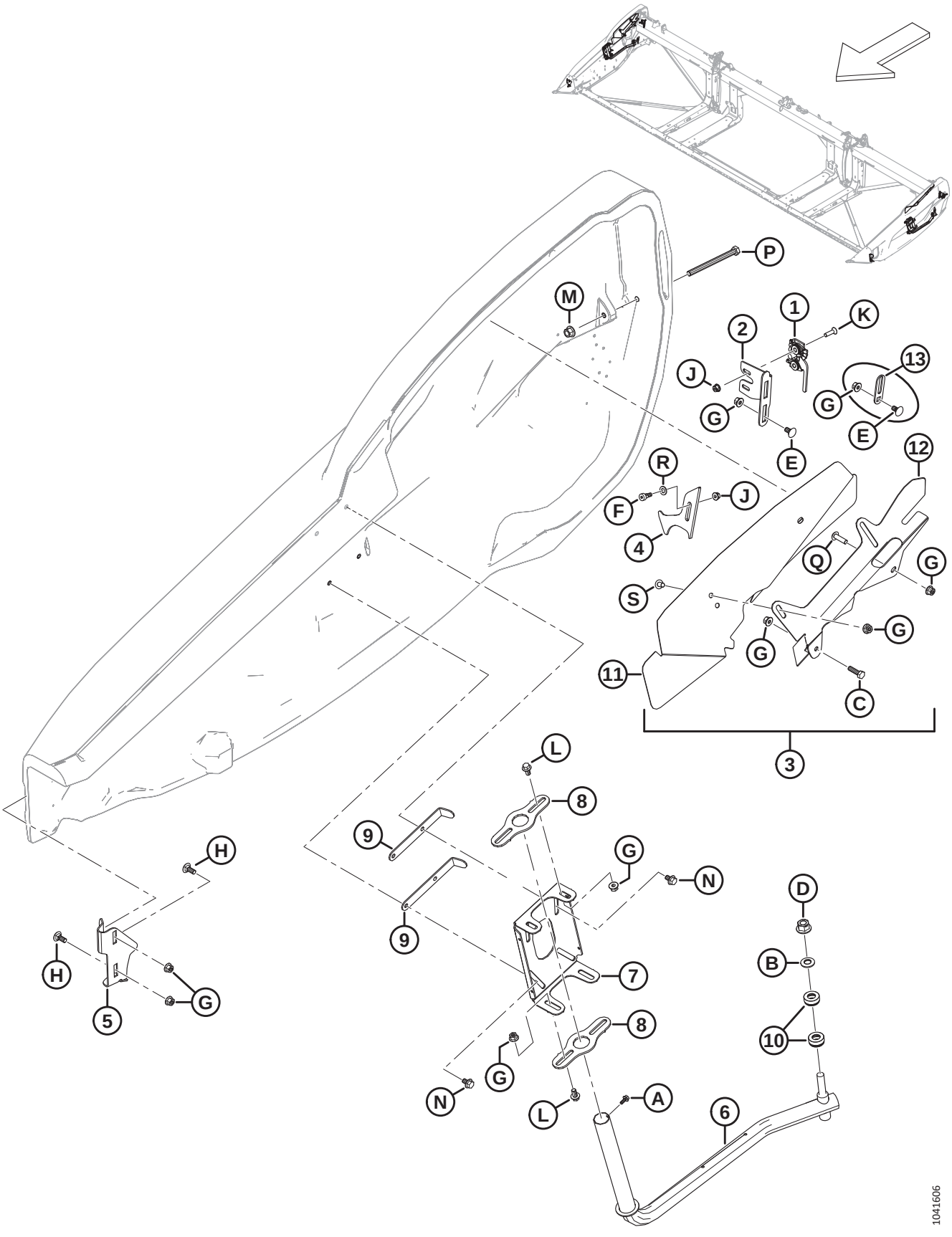

ENDSHIELD MOUNT COMPONENTS

Ref	Part Number	Description	Qty	Serial Number
1	289925	LATCH – RH 2 STAGE	1	
	289924	LATCH – LH 2 STAGE	1	
2	289621	SUPPORT – RH LATCH	1	
	289618	SUPPORT – LH LATCH	1	
3	360785	KIT – NECK SHIELD RH [20]	1	
	360784	KIT – NECK SHIELD LH [21]	1	
4	289519	LATCH – RH	1	
	289520	LATCH – LH	1	
5	289483	SUPPORT – RH FRONT	1	
	289380	SUPPORT – LH FRONT	1	
6	289439	ARM – RH WELDT	1	
	289375	ARM – LH WELDT	1	
7	313432	PIVOT – SHIELD RH	1	
	313303	PIVOT – SHIELD LH	1	
8	313304	PIVOT	4	
9	313783	RETAINER	4	
10	289487	BEARING – THRUST	4	
11	360379	SHIELD – RH NECK [22]	1	
	360378	SHIELD – LH NECK [22]	1	
12	360375	SUPPORT – RH NECK SHIELD [22]	1	
	360374	SUPPORT – LH NECK SHIELD [22]	1	
13	313713	GUIDE – LATCH [23]	2	
A	252284	SCREW – HEX WSHR HD M6 X 1 X 16-450HV		
B	184718	WASHER – CON SPRING M16 STL SAE 1050-1075		
C	184665	BOLT – HEX FLG HD M10 X 1.5 X 30-10.9-AA1J		
D	136736	NUT – HEX FLG TOP LOCK M16 X 1.5-10-AA2L		
E	136178	BOLT – RHSN M10 X 1.5 X 20-8.8-AA1J		
F	135894	SCREW – HEX SOC HD SHLDR M10		
G	135799	NUT – HEX FLG CTR LOC M10 X 1.5-10		
H	135785	BOLT – RHSN M10 X 1.5 X 25-8.8-AA1J		

20. The RH Neck Shield kit is used to service superseded RH neck shields (MD #340714) for model year 2023 and prior units. The kit includes RH neck shield (MD #360379), RH neck shield support (MD #360375), two screws (MD #136640), two nuts (MD #135799), and instructions.
21. The LH Neck Shield kit is used to service superseded LH neck shields (MD #340111) for model year 2023 and prior units. The kit includes LH neck shield (MD #360378), LH neck shield support (MD #360374), two screws (MD #136640), two nuts (MD #135799), and instructions.
22. Used for units made in model year 2024 and later, or for model year 2023 and prior units that have been serviced with neck shield kits (MD #360784 and MD #360785).
23. For export headers only.

ENDSHIELD MOUNT COMPONENTS

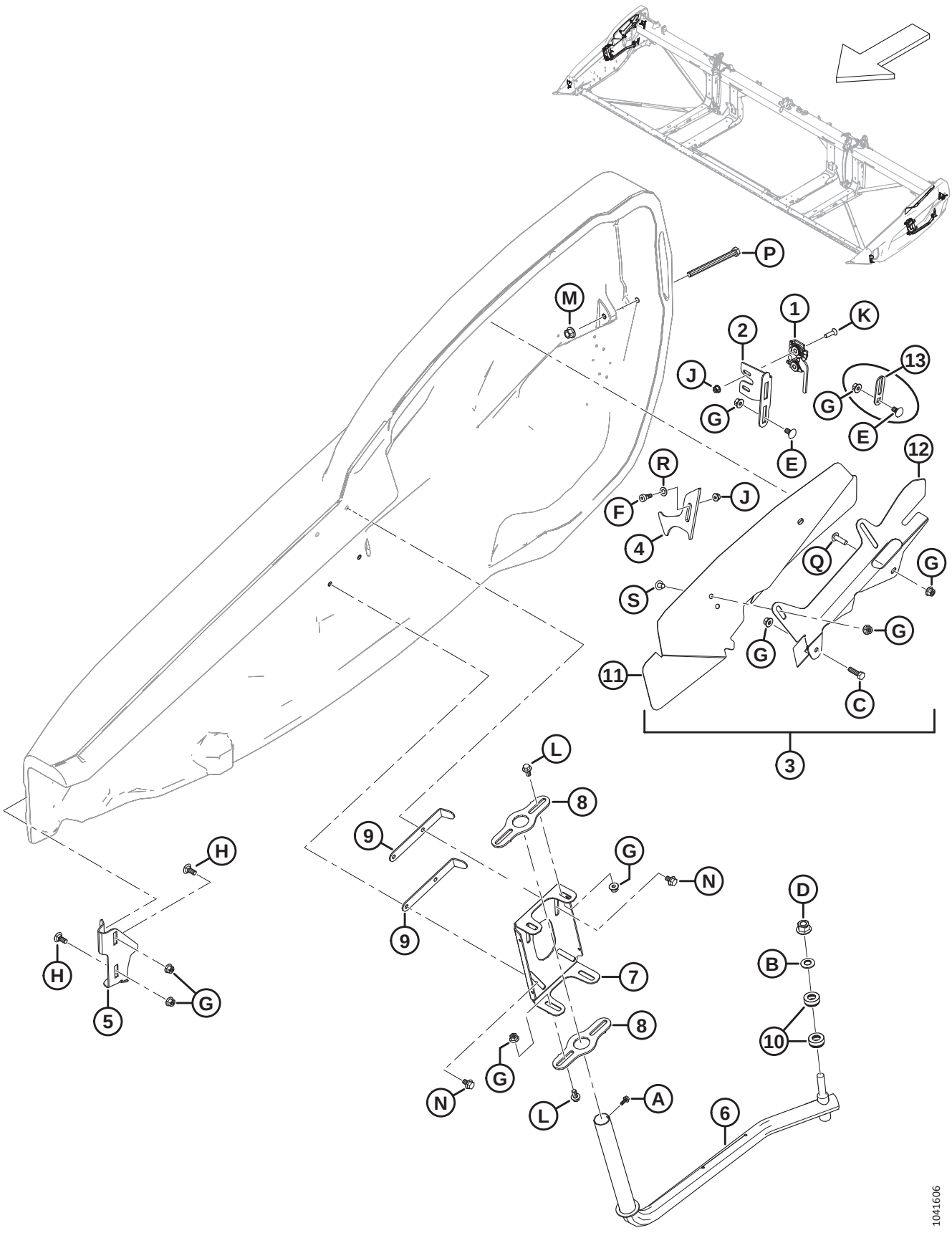

ENDSHIELD MOUNT COMPONENTS

Ref	Part Number	Description	Qty	Serial Number
J	135337	NUT – HEX FLG CTR LK M8 X 1.25-8-AA1J		
K	135336	SCREW – CSK MCH M8 X 1.25 X 30 GR5 AA1J		
L	152655	BOLT – HEX FLG HD M10 X 1.5 X 20-8.8-AA1J		
M	136431	NUT – HEX FLG CTR LOC M12 X 1.75-10		
N	136231	BOLT – HEX SER FLG HD M10 X 1.5 X 16 X SPCL-8.8		
P	135696	BOLT – HEX HD M12 X 1.75 X 150-8.8-AA1J		
Q	320327	SCREW – TORX TRUSS HD M10 X 1.5 X 35-SPCL-8.8-ZINC		
R	184711	WASHER – FLAT REG M10-200HV-AA1J		
S	136640	SCREW – TORX TRUSS HD M10 X 1.5 X 16 X SPCL-8.8-AA1J		

10 Draper

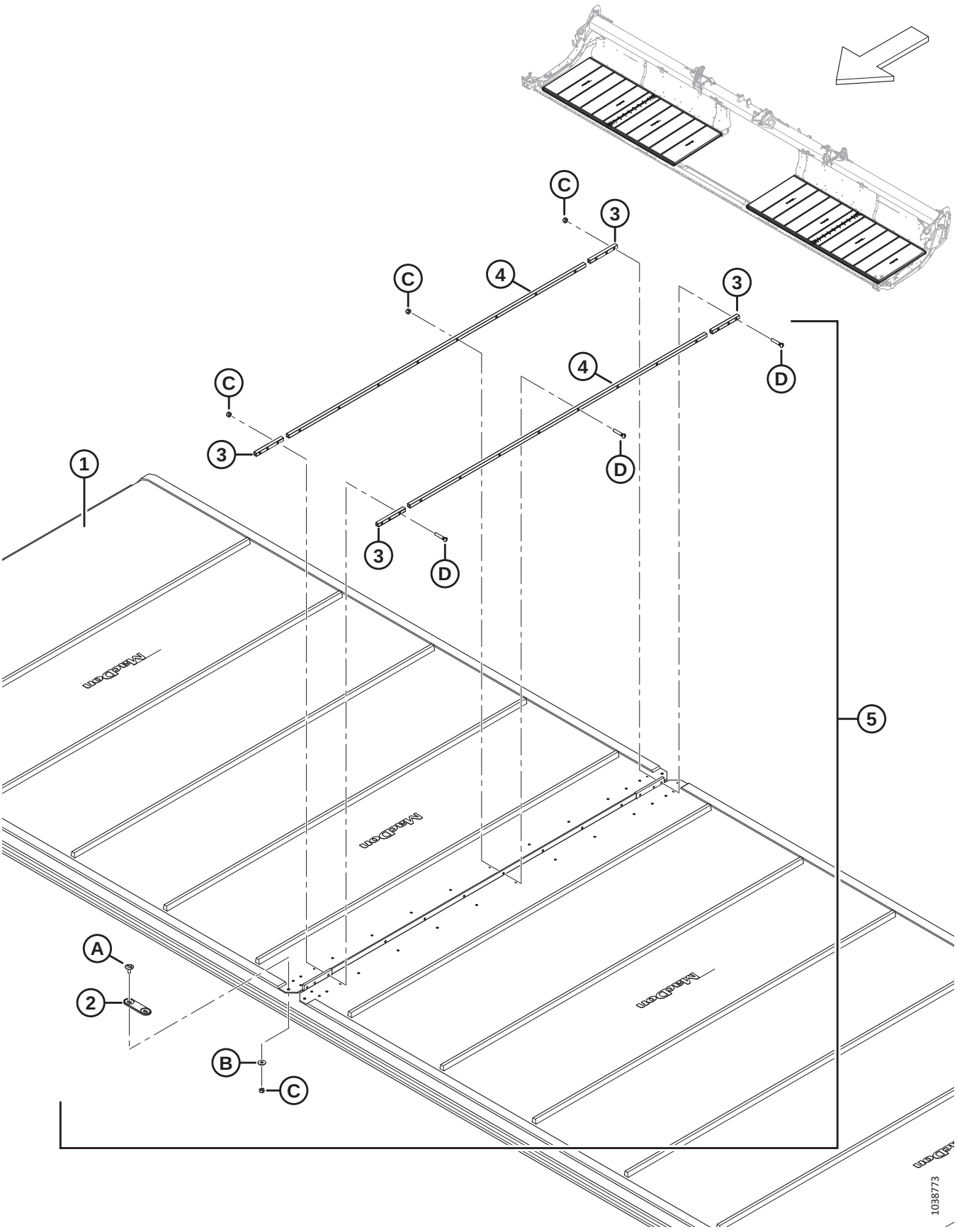

Ref	Part Number	Description	Qty	Serial Number
1	319098	KIT – DRAPER 25 FT, 50 INCH WIDE [24]	2	
	319099	KIT – DRAPER 30 FT, 50 INCH WIDE [24]	2	
	319100	KIT – DRAPER 35 FT, 50 INCH WIDE [24]	2	
	319101	KIT – DRAPER 40 FT, 50 INCH WIDE [24]	2	
	319102	KIT – DRAPER 41 FT, 50 INCH WIDE [24]	2	
	319103	KIT – DRAPER 45 FT, 50 INCH WIDE [24]	2	
	319104	KIT – DRAPER 50 FT, 50 INCH WIDE [24]	2	
	319105	KIT – DRAPER REPAIR 50 INCH, 500 MM (19.7 IN.) LG [25]	A/R	
	319540	KIT – BULK DRAPER 50 IN. [26]	OPT	
2	319662	CONNECTOR – BRIDGE	2	
3	NSS	BAR – CONNECTOR DRAPER HEM [27]	8	
	319347	KIT – DRAPER CONNECTOR 50 INCH, HEM [28]	A/R	
4	NSS	BAR – CONNECTOR DRAPER CENTER [29]	4	
	319346	KIT – DRAPER CONNECTOR 50 INCH, CENTER [30]	A/R	
5	319095	KIT – DRAPER CONNECTOR 50 INCH [31]	2	
A	320148	SCREW – TRUSS SLT HD M6 X 1.0 16-SPCL-8.8-ZINC		
B	184706	WASHER – FLAT LARGE M6-200HV		
C	286479	NUT – CTR LOC CSK M6 X 1 50PK [32]		
D	319345	KIT – SCREW M6 X 34 C/W NUT 30PK [33]		

24. The kit includes draper (NSS) and draper connector kit (MD #319095).
25. The kit includes draper repair piece (NSS) and two draper connector kits (MD #319095).
26. The kit includes a bulk draper roll and instructions.
27. Not sold separately (NSS). Order either the draper hem connector kit (MD #319347) or the draper connector kit (MD #319095).
28. The kit includes two draper hem connector bars (NSS) and hardware (MD #226259 and MD #320240).
29. Not sold separately (NSS). Order either the draper center connector kit (MD #319346) or the draper connector kit (MD #319095).
30. The kit includes two draper center connector bars (NSS) and hardware (MD #226259 and MD #320240).
31. One kit per side; Includes two draper center connector bars (NSS), four draper hem connector bars (NSS), bridge connector (MD #319662), and hardware.
32. The kit includes 50 nuts; used to service hardware C shown in the illustration.
33. The kit includes 30 screws and 30 nuts; used to service hardware D shown in the illustration.

11 Draper – Backsheet Panels (FD225)

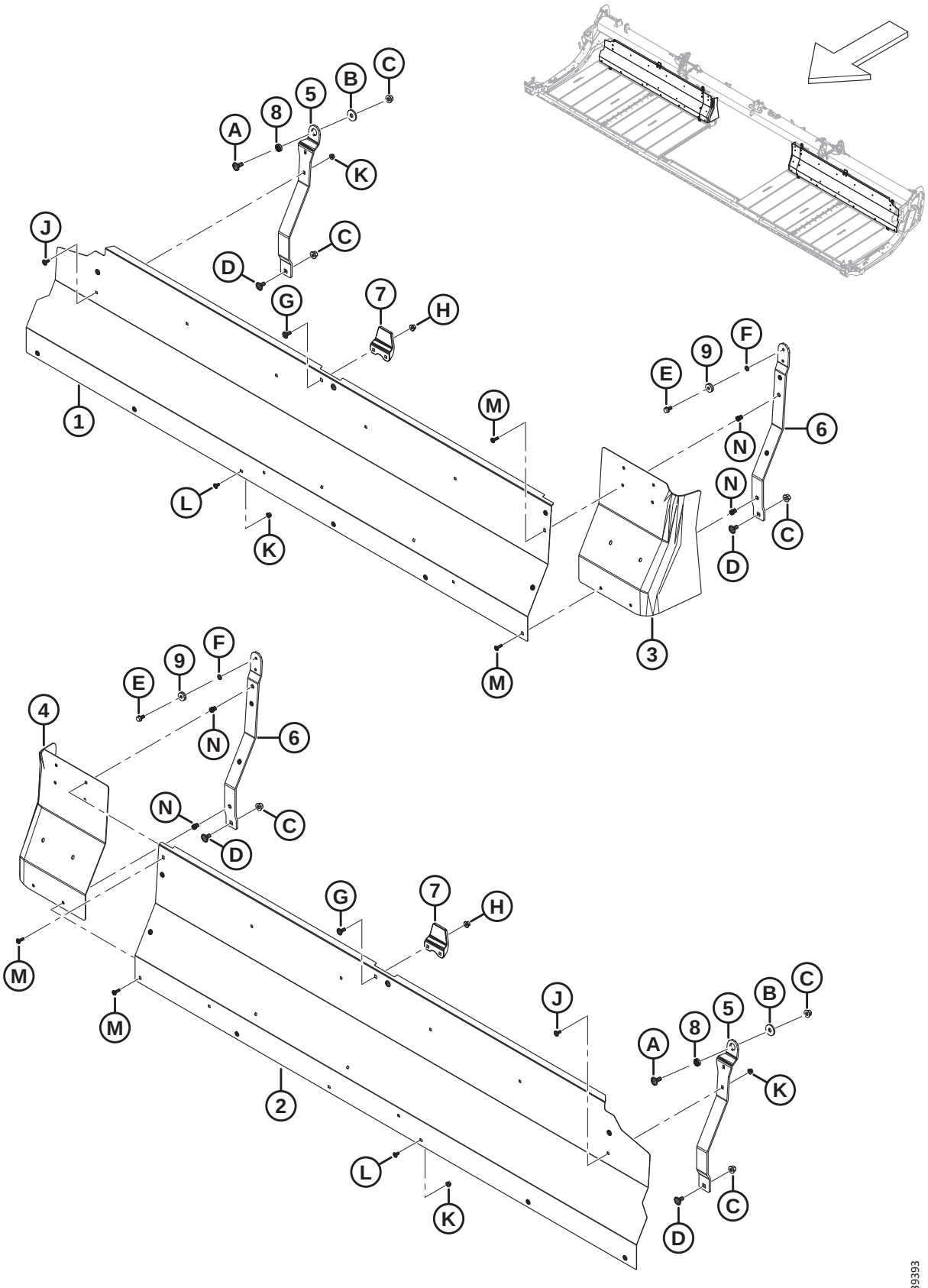

DRAPER – BACKSHEET PANELS (FD225)

Ref	Part Number	Description	Qty	Serial Number
1	275405	PANEL – BACKSHEET 25 FT RH	1	
2	275404	PANEL – BACKSHEET 25 FT LH	1	
3	319223	EXTENSION – BACKSHEET RH	1	
4	319222	EXTENSION – BACKSHEET LH	1	
5	319394	SUPPORT – DECK FLEX OUTBOARD	2	
6	319366	SUPPORT – DECK FLEX INBOARD [34]	2	
7	145840	GUIDE – BACKSHEET	2	
8	275563	SPACER – SPECIAL ROTATION	2	
9	18867	BEARING – BALL CYL OD C/W TWO SEALS	2	
A	184667	BOLT – RHSN M12 X 1.75 X 30-8.8-ZINC		
B	275623	WASHER – FLAT		
C	136431	NUT – HEX FLG CTR LOC M12 X 1.75-10		
D	135903	BOLT – RHSN M12 X 1.75 X 25-8.8-ZINC		
E	101897	SCREW – HEX WASH HD 3/8 NC X 3/4		
F	18637	WASHER – REG. LOCK 3/8 IN. NOM. I.D.		
G	135785	BOLT – RHSN M10 X 1.5 X 25-8.8-AA1J		
H	135799	NUT – HEX FLG CTR LOC M10 X 1.5-10		
J	197171	BOLT – RHSN M8 X 1.25 X 20-8.8-ZINC		
K	135337	NUT – HEX FLG CTR LK M8 X 1.25-8-AA1J		
L	191489	BOLT – RHSSN TFL M8 X 1.25 X 16-8.8-AA1J		
M	320290	SCREW – TORX TRUSS HD M8 X 1.25 X 25-SPCL-8.8-ZINC		
N	320181	RIVNUT – M8 X 1.25 HEX 3.8-7.9		

34. The kit includes inboard flex deck support assembly (NSS) and screw (MD #101897).

12 Draper – Backsheet Panels (FD230, FD235, FD240, and FD241)

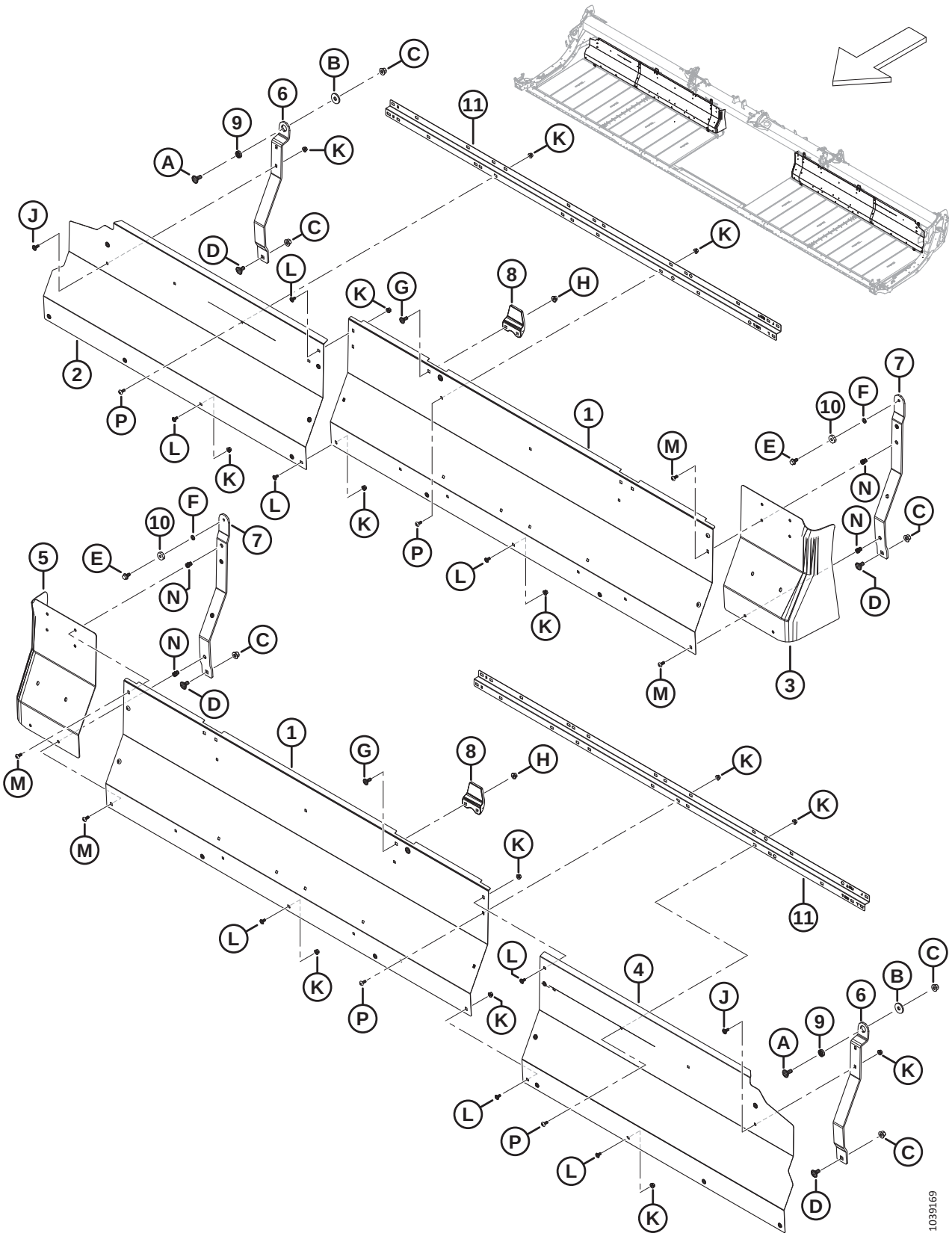

DRAPER – BACKSHEET PANELS (FD230, FD235, FD240, AND FD241)

Ref	Part Number	Description	Qty	Serial Number
1	275837	PANEL – BACKSHEET 30, 35, 40, 41 FT INNER	2	
2	275461	PANEL – BACKSHEET 30 FT RH OUTER	1	
	275320	PANEL – BACKSHEET 35 FT RH OUTER	1	
	275287	PANEL – BACKSHEET 40 FT RH OUTER	1	
	275483	PANEL – BACKSHEET 41 FT RH OUTER	1	
3	319223	EXTENSION – BACKSHEET RH	1	
4	275460	PANEL – BACKSHEET 30 FT LH OUTER	1	
	275319	PANEL – BACKSHEET 35 FT LH OUTER	1	
	275286	PANEL – BACKSHEET 40 FT LH OUTER	1	
	275484	PANEL – BACKSHEET 41 FT LH OUTER	1	
5	319222	EXTENSION – BACKSHEET LH	1	
6	319394	SUPPORT – DECK FLEX OUTBOARD	2	
7	319366	SUPPORT – DECK FLEX INBOARD [35]	2	
8	145840	GUIDE – BACKSHEET	2	
9	275563	SPACER – SPECIAL ROTATION	2	
10	18867	BEARING – BALL CYL OD C/W TWO SEALS	2	
11	360509	SUPPORT – BACKSHEET	2	
A	184667	BOLT – RHSN M12 X 1.75 X 30-8.8-ZINC		
B	275623	WASHER – FLAT		
C	136431	NUT – HEX FLG CTR LOC M12 X 1.75-10		
D	135903	BOLT – RHSN M12 X 1.75 X 25-8.8-ZINC		
E	101897	SCREW – HEX WASH HD 3/8 NC X 3/4		
F	18637	WASHER – REG. LOCK 3/8 IN. NOM. I.D.		
G	135785	BOLT – RHSN M10 X 1.5 X 25-8.8-AA1J		
H	135799	NUT – HEX FLG CTR LOC M10 X 1.5-10		
J	197171	BOLT – RHSN M8 X 1.25 X 20-8.8-ZINC		
K	135337	NUT – HEX FLG CTR LK M8 X 1.25-8-AA1J		
L	191489	BOLT – RHSSN TFL M8 X 1.25 X 16-8.8-AA1J		
M	320290	SCREW – TORX TRUSS HD M8 X 1.25 X 25-SPCL-8.8-ZINC		
N	320181	RIVNUT – M8 X 1.25 HEX 3.8-7.9		
P	320190	SCREW – TORX TRUSS HD M8 X 1.25 X 20-SPCL-8.8-ZINC		

35. The kit includes inboard flex deck support assembly (NSS) and screw (MD #101897).

13 Draper – Backsheet Panels (FD245 and FD250)

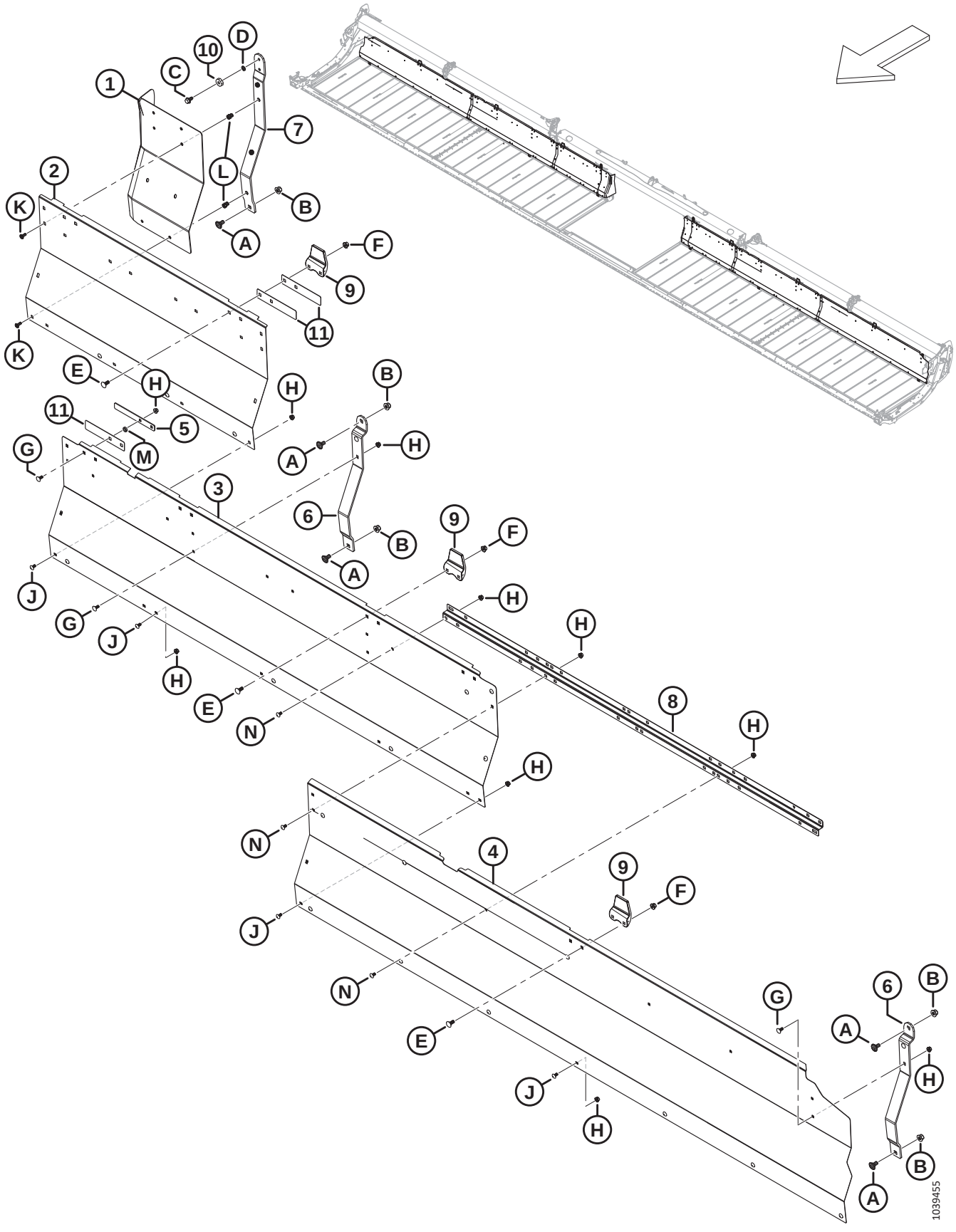

DRAPER – BACKSHEET PANELS (FD245 AND FD250)

Ref	Part Number	Description	Qty	Serial Number
1	319222	EXTENSION – BACKSHEET LH	1	
	319223	EXTENSION – BACKSHEET RH	1	
2	275965	PANEL – BACKSHEET LH/RH INBOARD	2	
3	275676	PANEL – BACKSHEET LH/RH MIDDLE	2	
4	275319	PANEL – BACKSHEET 45 FT LH OUTER	1	
	275320	PANEL – BACKSHEET 45 FT RH OUTER	1	
	275286	PANEL – BACKSHEET 50 FT LH OUTER	1	
	275287	PANEL – BACKSHEET 50 FT RH OUTER	1	
5	319404	PLATE – RETAINER BACKSHEET	2	
6	275675	SUPPORT – DECK	4	
7	319366	SUPPORT – DECK FLEX INBOARD [36]	2	
8	360509	SUPPORT – BACKSHEET	2	
9	145840	GUIDE – BACKSHEET	6	
10	18867	BEARING – BALL CYL OD C/W TWO SEALS	2	
11	319403	PLATE – GUIDE BACKSHEET	6	
A	135903	BOLT – RHSN M12 X 1.75 X 25-8.8-ZINC		
B	136431	NUT – HEX FLG CTR LOC M12 X 1.75-10		
C	101897	SCREW – HEX WASH HD 3/8 NC X 3/4		
D	18637	WASHER – REG. LOCK 3/8 IN. NOM. I.D.		
E	135785	BOLT – RHSN M10 X 1.5 X 25-8.8-AA1J		
F	135799	NUT – HEX FLG CTR LOC M10 X 1.5-10		
G	197171	BOLT – RHSN M8 X 1.25 X 20-8.8-ZINC		
H	135337	NUT – HEX FLG CTR LK M8 X 1.25-8-AA1J		
J	191489	BOLT – RHSSN TFL M8 X 1.25 X 16-8.8-AA1J		
K	320290	SCREW – TORX TRUSS HD M8 X 1.25 X 25-SPCL-8.8-ZINC		
L	320181	RIVNUT – M8 X 1.25 HEX 3.8-7.9		
M	255930	WASHER – FLAT		
N	320190	SCREW – TORX TRUSS HD M8 X 1.25 X 20-SPCL-8.8-ZINC		

36. The kit includes inboard flex deck support assembly (NSS) and screw (MD #101897).

14 Draper – Tensioner

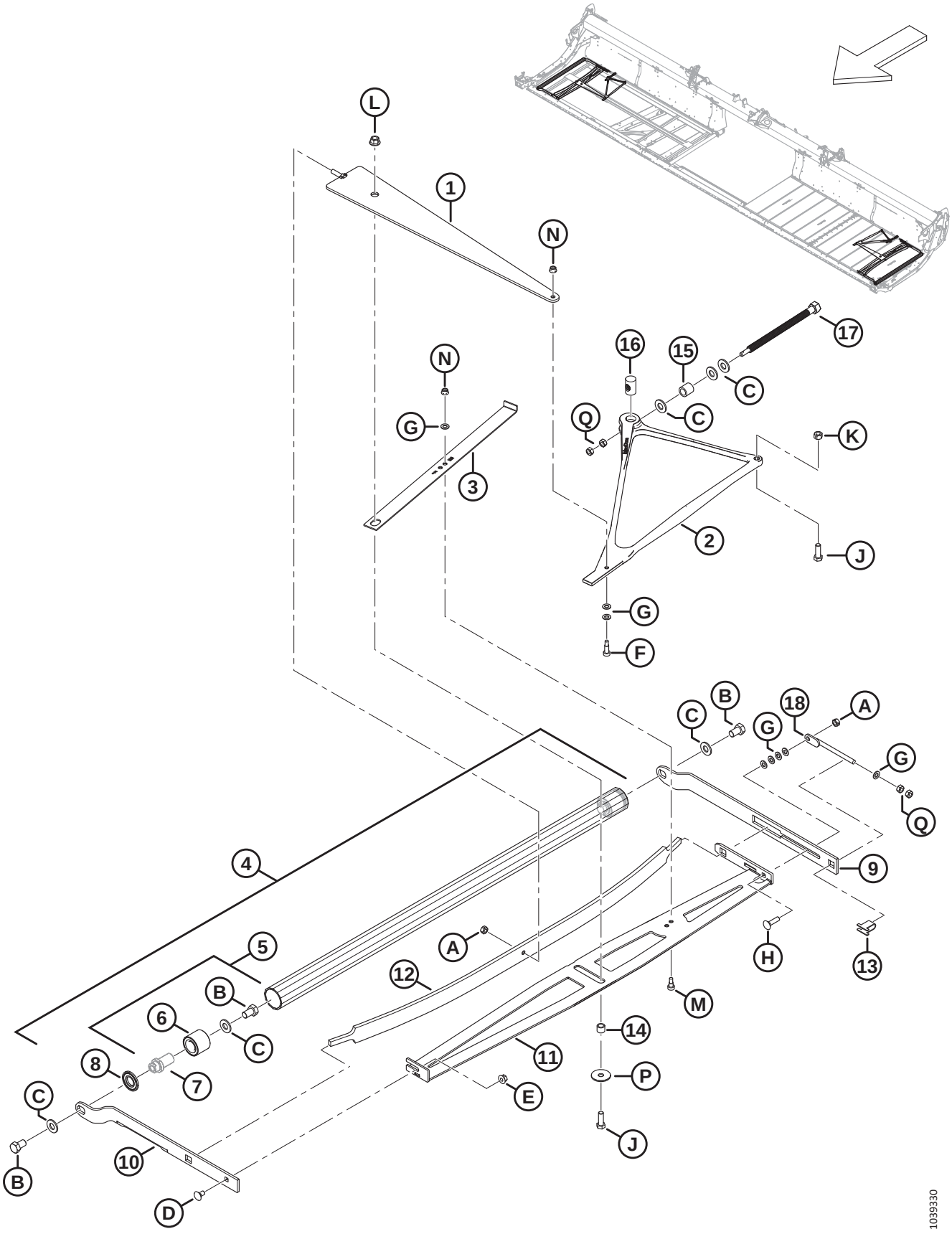

DRAPER – TENSIONER

Ref	Part Number	Description	Qty	Serial Number
1	319051	MEMBER – COMPRESSION WELDT	2	
2	275902	CASTING – TENSIONER BELLCRANK	2	
3	275877	INDICATOR – TENSIONER	2	
4	275211	IDLER ROLLER ASSY SERVICE [37]	2	
5	165735	PIN ASSY – DRAPER ROLLER [38]	4	
6	132607	BEARING – DOUBLE ROW BALL 52 OD X 25 BORE	4	
7	NSS	PIN [39]		
8	120845	SEAL – NILOS LSTO STEEL DISK	4	
9	275324	ARM – IDLER ROLLER REAR	2	
10	319708	ARM – RH FRONT IDLER ROLLER	1	
	319707	ARM – LH FRONT IDLER ROLLER	1	
11	275375	MEMBER – RH STABILIZER WELDT	1	
	275348	MEMBER – LH STABILIZER WELDT	1	
12	227747	SPRING – LEAF	2	
13	275232	SUPPORT – ADJUSTER SCREW	2	
14	132531	SPACER	2	
15	227656	SPACER – TENSIONER BOLT	2	
16	275879	NUT – SPECIAL LEAD-SCREW	2	
17	320167	BOLT – HEX HD M16 X 4.0-SPCL-8.8-AA1J	2	
18	227914	BOLT – ADJUSTER WELDT	2	
A	320206	NUT – HEX CTR LOC M10 X 1.5-8-ZINC		
B	145249	BOLT – HEX HD TFL 5/8-18 X 1.0 GR5-AA1J		
C	30441	WASHER – HARDENED ASTM F436 5/8		
D	135785	BOLT – RHSN M10 X 1.5 X 25-8.8-AA1J		
E	135799	NUT – HEX FLG CTR LOC M10 X 1.5-10		
F	197275	SCREW – HEX SOC HD SHLDR M10 X 20		
G	184711	WASHER – FLAT REG M10-200HV-AA1J		
H	152732	BOLT – RHSN M10 X 1.5 X 40-8.8-AA1J		
J	152730	BOLT – HEX HD TFL M12 X 1.75 X 35-10.9-AA1J		
K	136759	NUT – HEX CTR LOC M12 X 1.75-8-AA1J		
L	136431	NUT – HEX FLG CTR LOC M12 X 1.75-10		
M	135894	SCREW – HEX SOC HD SHLDR M10		
N	135337	NUT – HEX FLG CTR LK M8 X 1.25-8-AA1J		
P	42592	WASHER – FLAT		
Q	30505	NUT – HEX M10 X 1.5-10-AA1J		

37. Includes two pin assemblies (MD #165735) and two seals (MD #120845).
38. Includes pin (NSS), bearing (MD #132607), and hardware (MD #30441, MD #145249).
39. Not sold separately; included in pin assembly (MD #165735).

15 Draper – Drive Roller

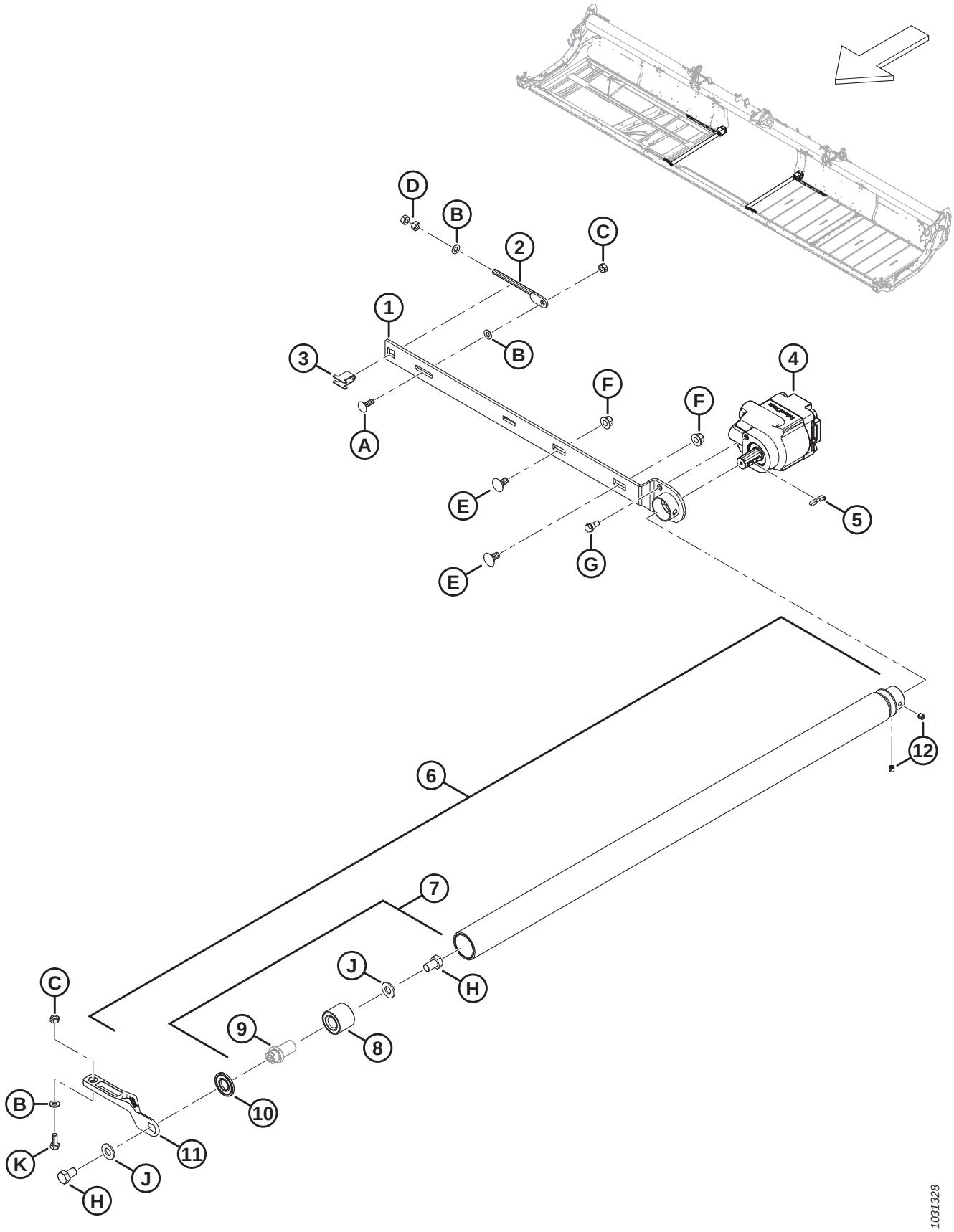

DRAPER – DRIVE ROLLER

Ref	Part Number	Description	Qty	Serial Number
1	275332	ARM – DRIVE ROLLER WELDT	1	
2	227914	BOLT – ADJUSTER WELDT	1	
3	275232	SUPPORT – ADJUSTER SCREW	1	
4	275860	MOTOR – HYD GEAR DRAPER DRIVE	1	
	319583	SEAL KIT – DRAPER DRIVE MOTOR		
5	275864	KEY – DRAPER DRIVE MOTOR	1	
6	319191	DRIVE ROLLER ASSY SERVICE [40]	1	
7	165735	PIN ASSY – DRAPER ROLLER [41]	1	
8	132607	BEARING – DOUBLE ROW BALL 52 OD X 25 BORE	1	
9	NSS	PIN [42]		
10	120845	SEAL – NILOS LSTO STEEL DISK	1	
11	319265	CASTING – RH/LH FRONT DRIVE ARM	2	
12	320182	SCREW – SET SOC M10 X 1.5 X 10-8.8-BO	2	
A	184662	BOLT – RHSN TFL M10 X 1.5 X 30-8.8-AA1J		
B	184711	WASHER – FLAT REG M10-200HV-AA1J		
C	320206	NUT – HEX CTR LOC M10 X 1.5-8-ZINC		
D	30505	NUT – HEX M10 X 1.5-10-AA1J		
E	135903	BOLT – RHSN M12 X 1.75 X 25-8.8-ZINC		
F	136431	NUT – HEX FLG CTR LOC M12 X 1.75-10		
G	172259	BOLT – SHOULDER .375-16 UNC-AA1J		
H	145249	BOLT – HEX HD TFL 5/8-18 X 1.0 GR5-AA1J		
J	30441	WASHER – HARDENED ASTM F436 5/8		
K	184661	BOLT – HEX HD TFL M10 X 1.5 X 30-8.8-AA1J		

40. Includes vulcanized roller (NSS), pin assembly (MD #165735), seal (MD #120845), and two set screws (MD #320182).
41. Includes pin (NSS), bearing (MD #132607), and hardware (MD #30441, MD #145249).
42. Not sold separately; included in pin assembly (MD #165735).

16 Draper – Decks and Tracks (FD225)

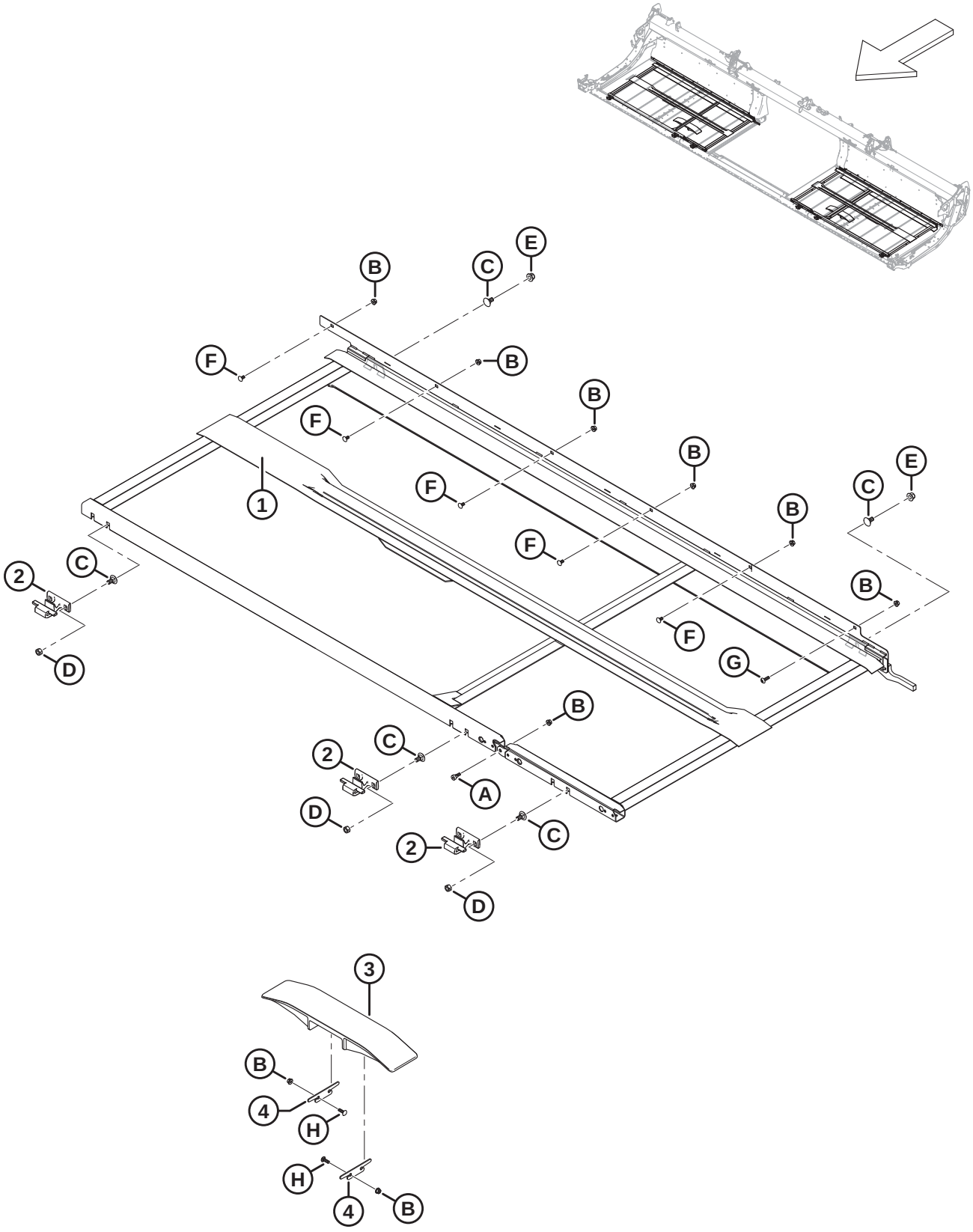

Ref	Part Number	Description	Qty	Serial Number
1	319588	DECK WELDT – 25 FT RH FLEX	1	
	319587	DECK WELDT – 25 FT LH FLEX	1	
2	319225	CASTING – DECK FRONT HOOK	6	
3	340841	TRACK – STANDARD PLASTIC	2	
4	340681	SHIM – DRAPER TRACK	4	
A	135894	SCREW – HEX SOC HD SHLDR M10		
B	135337	NUT – HEX FLG CTR LK M8 X 1.25-8-AA1J		
C	135903	BOLT – RHSN M12 X 1.75 X 25-8.8-ZINC		
D	136759	NUT – HEX CTR LOC M12 X 1.75-8-AA1J		
E	136431	NUT – HEX FLG CTR LOC M12 X 1.75-10		
F	191489	BOLT – RHSSN TFL M8 X 1.25 X 16-8.8-AA1J		
G	320290	SCREW – TORX TRUSS HD M8 X 1.25 X 25-SPCL-8.8-ZINC		
H	136824	BOLT – RHSSN M8 X 1.25 X 25-8.8-AA1J		

17 Draper – Decks and Tracks (FD230, FD235, FD240, and FD241)

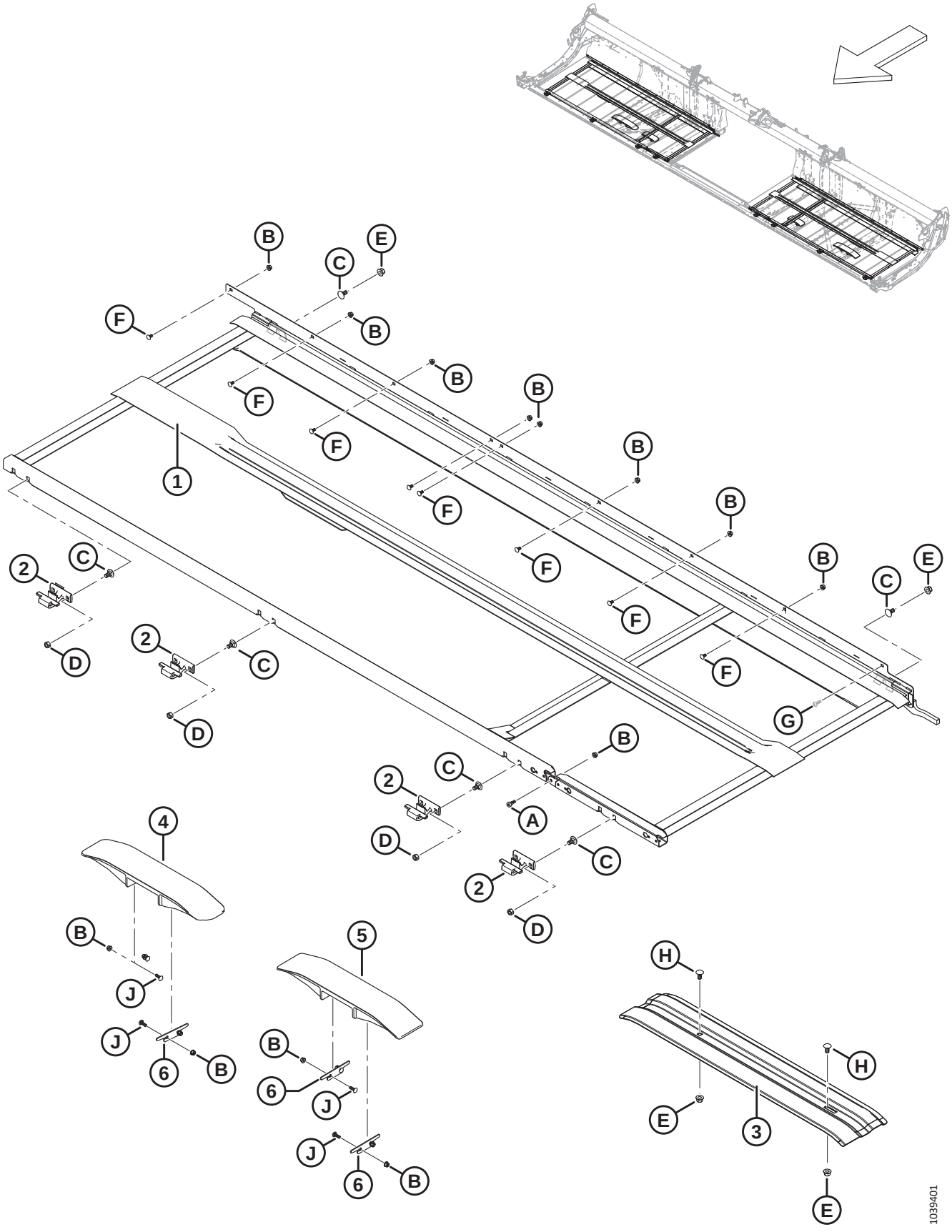

Ref	Part Number	Description	Qty	Serial Number
1	275266	DECK WELDT – 30 FT RH FLEX	1	
	275265	DECK WELDT – 30 FT LH FLEX	1	
	275505	DECK WELDT – 35 FT RH FLEX	1	
	275504	DECK WELDT – 35 FT LH FLEX	1	
	275199	DECK WELDT – 40 FT RH FLEX	1	
	275200	DECK WELDT – 40 FT LH FLEX	1	
	275514	DECK WELDT – 41 FT RH FLEX	1	
	275513	DECK WELDT – 41 FT LH FLEX	1	
2	319225	CASTING – DECK FRONT HOOK [43]		
3	319376	SUPPORT – LOWER DRAPER TRACK (LH FD230, FD235 ONLY) [44]	A/R	–451189
	319378	SUPPORT – LOWER DRAPER TRACK (LH FD240, FD241 ONLY) [44]	A/R	–451189
	319228	SUPPORT – LOWER DRAPER TRACK (RH FD230 ONLY) [44]	A/R	–451189
	319377	SUPPORT – LOWER DRAPER TRACK (RH FD235, FD240, FD241 ONLY) [44]	A/R	–451189
4	360151	TRACK – ANGLED PLASTIC	1	451190–
5	340841	TRACK – STANDARD PLASTIC [45]		451190–
	360150	TRACK – SHORT PLASTIC (FD230 ONLY) [46]		451190–
6	340681	SHIM – DRAPER TRACK	6	451190–
A	135894	SCREW – HEX SOC HD SHLDR M10		
B	135337	NUT – HEX FLG CTR LK M8 X 1.25-8-AA1J		
C	135903	BOLT – RHSN M12 X 1.75 X 25-8.8-ZINC		
D	136759	NUT – HEX CTR LOC M12 X 1.75-8-AA1J		
E	136431	NUT – HEX FLG CTR LOC M12 X 1.75-10		
F	191489	BOLT – RHSSN TFL M8 X 1.25 X 16-8.8-AA1J		
G	320290	SCREW – TORX TRUSS HD M8 X 1.25 X 25-SPCL-8.8-ZINC		
H	152439	BOLT – RHSSN M12 X 1.75 X 25-8.8-AA1J		
J	136824	BOLT – RHSSN M8 X 1.25 X 25-8.8-AA1J		

43. Quantities: FD230 = 8, FD235 = 10, FD240 = 10, and FD241 = 10.
44. Service part only for model year 2022 and prior headers.
45. Quantities: FD230 = 1, FD235 = 3, FD240 = 3, and FD241 = 3.
46. Short plastic tracks are used on the inboard header frame legs for FD230 headers only. Quantities: FD230 = 2.

18 Draper – Decks and Tracks (FD245 and FD250)

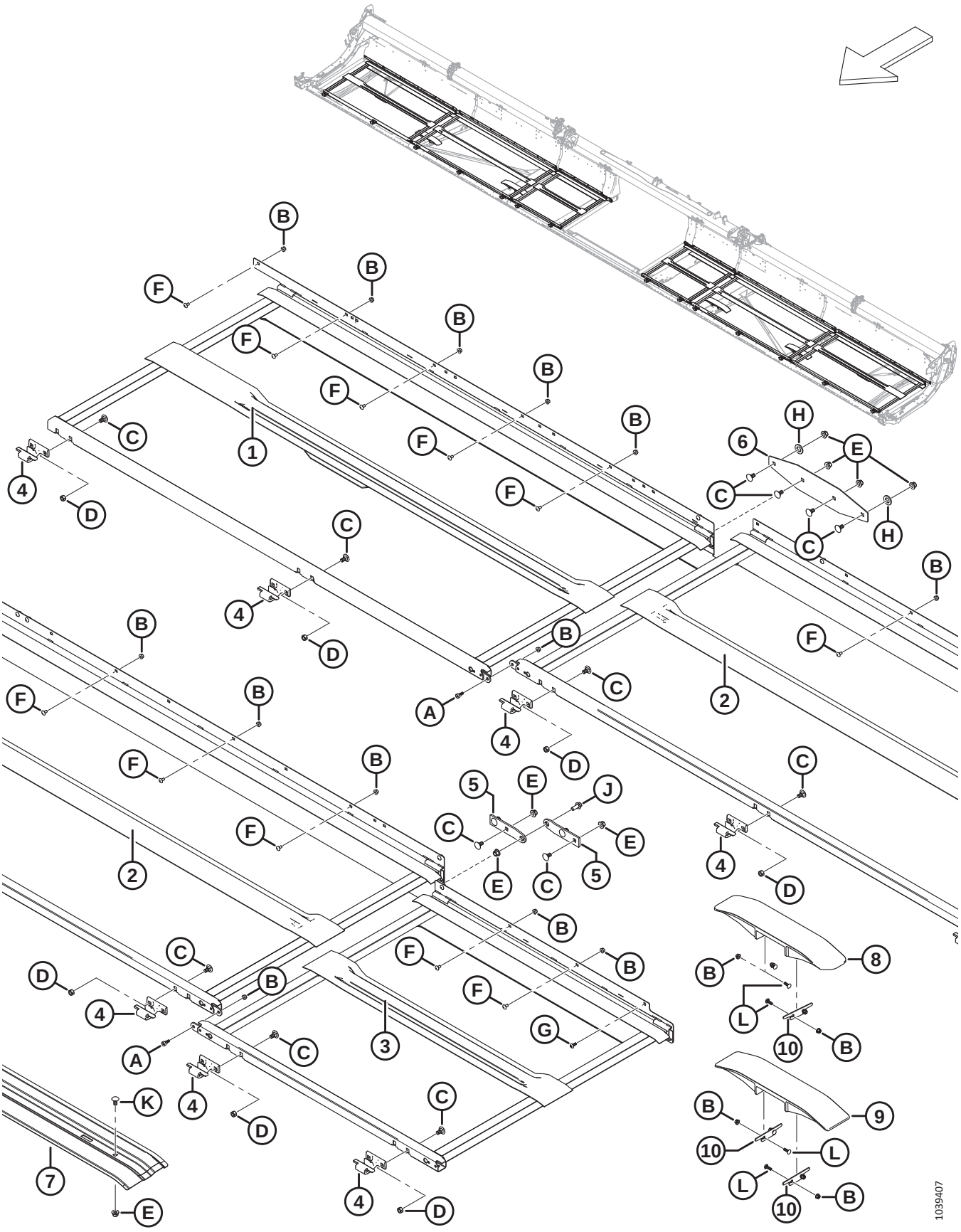

Ref	Part Number	Description	Qty	Serial Number
1	275770	DECK WELDT – RH OUTBOARD	1	
	275960	DECK WELDT – LH OUTBOARD	1	
2	275779	DECK WELDT – 45 FT MIDDLE	2	
	275954	DECK WELDT – 50 FT MIDDLE	2	
3	275641	DECK WELDT – RH INBOARD	1	
	275640	DECK WELDT – LH INBOARD	1	
4	319225	CASTING – DECK FRONT HOOK	14	
5	275688	HINGE – WIDE FRAME DECK	4	
6	275690	PLATE – DECK FRAME JOINT	2	
7	319377	SUPPORT – DRAPER TRACK (RH FD245) [47]	A/R	–451189
	319378	SUPPORT – DRAPER TRACK (LH FD245) [48]	A/R	–451189
	319287	SUPPORT – DRAPER TRACK (FD250) [49]	A/R	–451189
8	360151	TRACK – ANGLED PLASTIC	1	451190–
9	340841	TRACK – STANDARD PLASTIC	3	451190–
10	340681	SHIM – DRAPER TRACK	6	451190–
A	135894	SCREW – HEX SOC HD SHLDR M10		
B	135337	NUT – HEX FLG CTR LK M8 X 1.25-8-AA1J		
C	135903	BOLT – RHSN M12 X 1.75 X 25-8.8-ZINC		
D	136759	NUT – HEX CTR LOC M12 X 1.75-8-AA1J		
E	136431	NUT – HEX FLG CTR LOC M12 X 1.75-10		
F	191489	BOLT – RHSSN TFL M8 X 1.25 X 16-8.8-AA1J		
G	320290	SCREW – TORX TRUSS HD M8 X 1.25 X 25-SPCL-8.8-ZINC		
H	112130	WASHER – HARD ASTM F4363/4 IN. NOM. ID AB0C		
J	148798	BOLT – HEX FLG HD M12 X 1.75 X 30-10.9-AA1J		
K	152439	BOLT – RHSSN M12 X 1.75 X 25-8.8-AA1J		
L	136824	BOLT – RHSSN M8 X 1.25 X 25-8.8-AA1J		

47. RH draper track support for model year 2022 and prior FD245 headers.
48. LH draper track support for model year 2022 and prior FD245 headers.
49. RH and LH draper track support for model year 2022 and prior FD250 headers.

19 Draper – Seals (FD225)

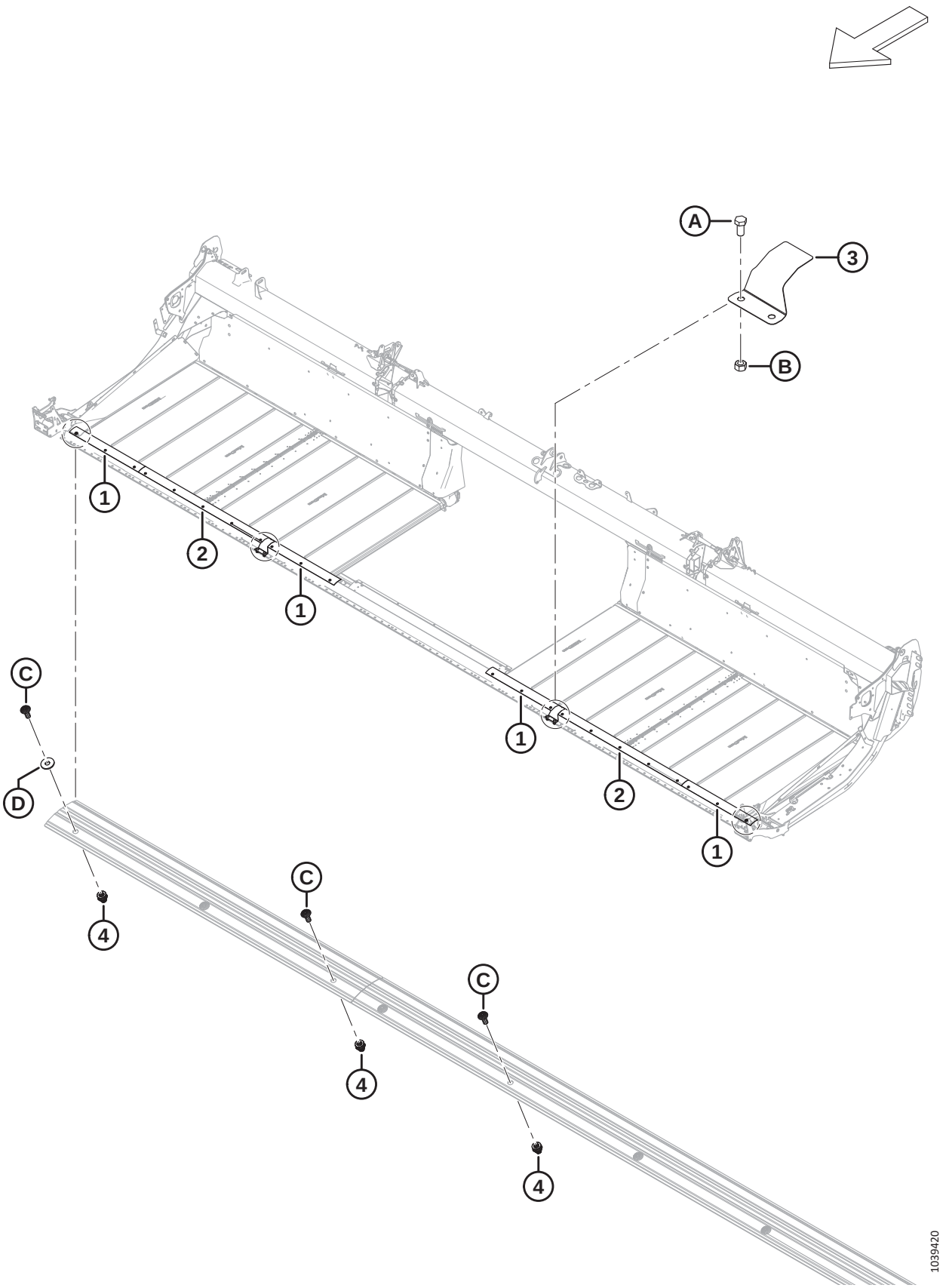

DRAPER – SEALS (FD225)

Ref	Part Number	Description	Qty	Serial Number
1	319231	PLATE – CUTTERBAR SEAL	2	
2	319229	PLATE – CUTTERBAR SEAL	4	
3	319180	COVER – CUTTERBAR HINGE	2	
4	320448	RIVNUT – M8 X 1.25 HEX	22	
A	50155	BOLT – HEX HD TFL M12 X 1.75 X 25-8.8-AA1J		
B	184694	NUT – HEX M12 X 1.75-8-AA1J		
C	320190	SCREW – TORX TRUSS HD M8 X 1.25 X 20-SPCL-8.8-ZINC		
D	184709	WASHER – FLAT LARGE M8-200HV		

20 Draper – Seals (FD230, FD235, and FD240)

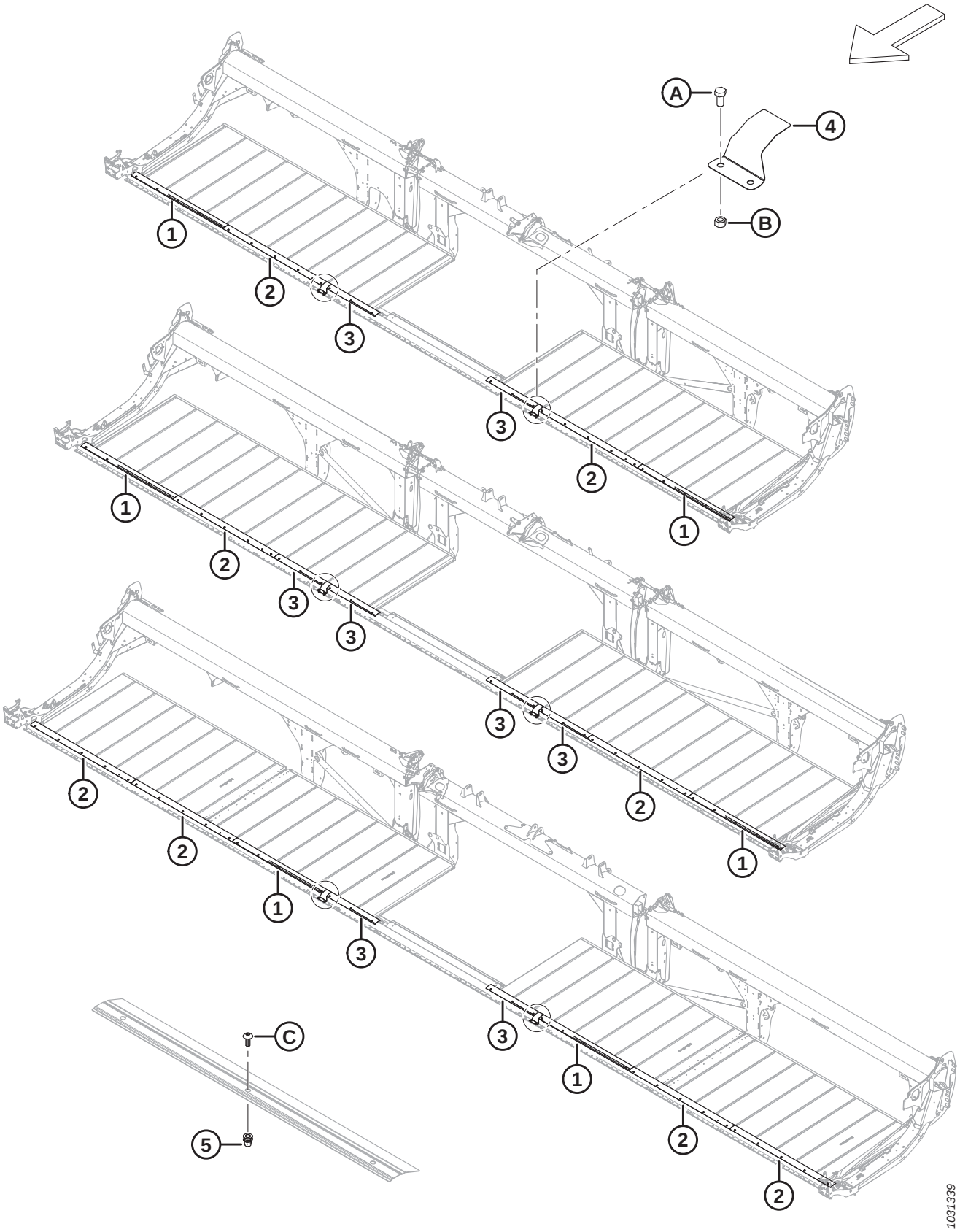

Ref	Part Number	Description	Qty	Serial Number
1	319231	PLATE – CUTTERBAR SEAL [50]		
2	319230	PLATE – CUTTERBAR SEAL [51]		
3	319229	PLATE – CUTTERBAR SEAL [52]		
4	319180	COVER – CUTTERBAR HINGE	2	
5	320448	RIVNUT – M8 X 1.25 HEX [53]		
A	50155	BOLT – HEX HD TFL M12 X 1.75 X 25-8.8-AA1J		
B	184694	NUT – HEX M12 X 1.75-8-AA1J		
C	320190	SCREW – TORX TRUSS HD M8 X 1.25 X 20-SPCL-8.8-ZINC		

50. Quantities: FD230 = 2, FD235 = 2, and FD240 = 2.
51. Quantities: FD230 = 2, FD235 = 2, and FD240 = 4.
52. Quantities: FD230 = 2, FD235 = 4, and FD240 = 2.
53. Quantities: FD230 = 26, FD235 = 32, and FD240 = 36.

21 Draper – Seals (FD241, FD245, and FD250)

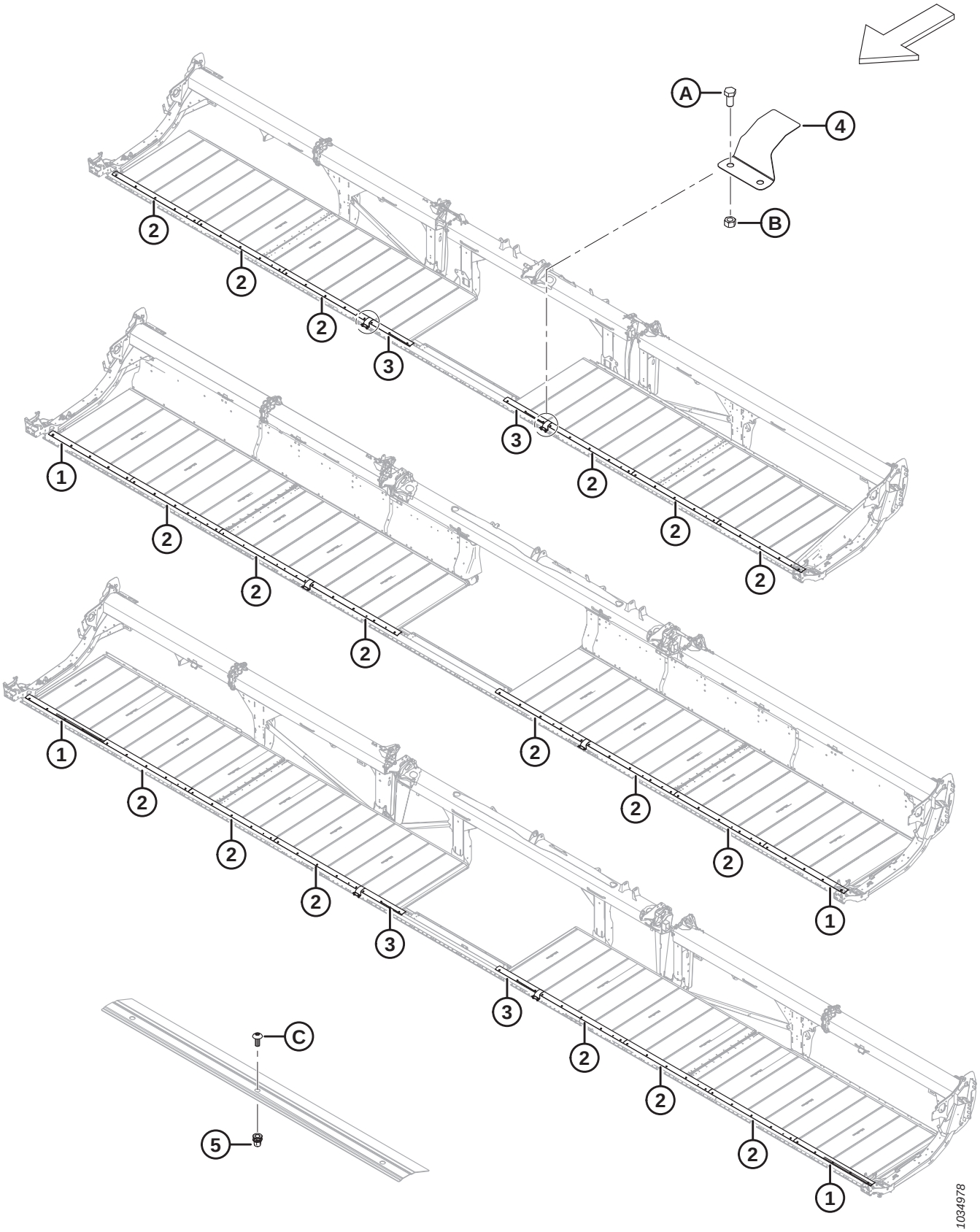

Ref	Part Number	Description	Qty	Serial Number
1	319231	PLATE – CUTTERBAR SEAL [54]		
2	319230	PLATE – CUTTERBAR SEAL [55]		
3	319229	PLATE – CUTTERBAR SEAL [56]		
4	319180	COVER – CUTTERBAR HINGE	2	
5	320448	RIVNUT – M8 X 1.25 HEX [57]		
A	50155	BOLT – HEX HD TFL M12 X 1.75 X 25-8.8-AA1J		
B	184694	NUT – HEX M12 X 1.75-8-AA1J		
C	320190	SCREW – TORX TRUSS HD M8 X 1.25 X 20-SPCL-8.8-ZINC		

54. Quantities: FD241 = 0, FD245 = 2, and FD250 = 2.
55. Quantities: FD241 = 6, FD245 = 6, and FD250 = 6.
56. Quantities: FD241 = 2, FD245 = 0, and FD250 = 2.
57. Quantities: FD241 = 36, FD245 = 40, and FD250 = 46.

22 Draper Deflectors – Narrow

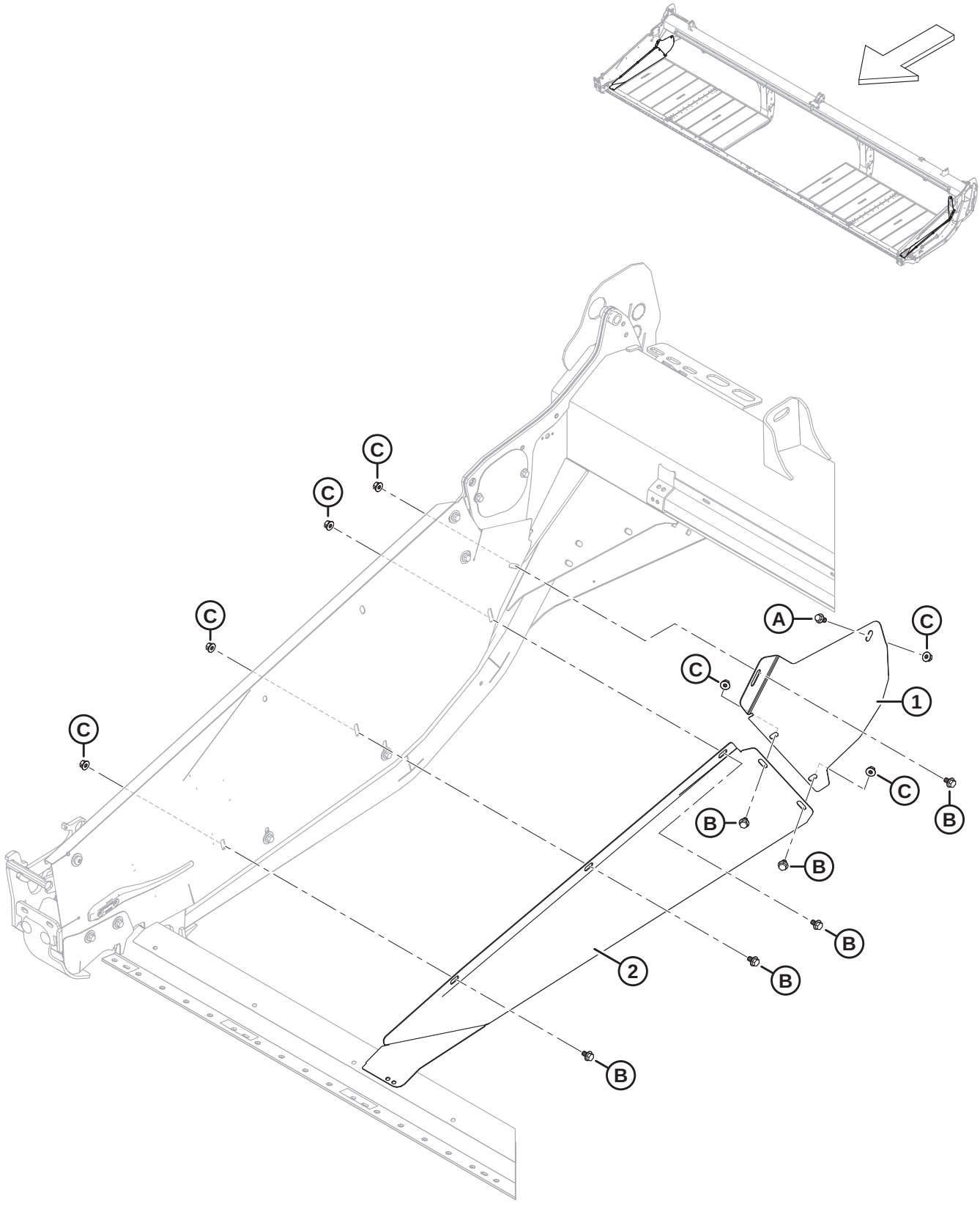

DRAPER DEFLECTORS – NARROW

Ref	Part Number	Description	Qty	Serial Number
1	289357	DEFLECTOR – RH NARROW REAR **(2023 AND PRIOR)** [58]	1	**–486189**
	289347	DEFLECTOR – LH NARROW REAR **(2023 AND PRIOR)** [58]	1	**–486189**
	360755	**DEFLECTOR – RH NARROW REAR (2024 AND LATER)** [59]	**1**	**486190–**
	360754	**DEFLECTOR – LH NARROW REAR (2024 AND LATER)** [59]	**1**	**486190–**
2	289356	DEFLECTOR – RH NARROW FRONT **(2023 AND PRIOR)** [58]	1	**–486189**
	289346	DEFLECTOR – LH NARROW FRONT **(2023 AND PRIOR)** [58]	1	**–486189**
	360521	**DEFLECTOR – RH NARROW FRONT (2024 AND LATER)** [59]	**1**	**486190–**
	360520	**DEFLECTOR – LH NARROW FRONT (2024 AND LATER)** [59]	**1**	**486190–**
A	152655	BOLT – HEX FLG HD M10 X 1.5 X 20-8.8-AA1J		
B	136151	BOLT – HEX FLG HD TFL M10 X 1.5 X 16-8.8-AA1J		
C	135799	NUT – HEX FLG CTR LOC M10 X 1.5-10		

58. Service part only for model year 2023 and prior headers.
59. Service part only for model year 2024 and later headers.

23 Balance Linkage

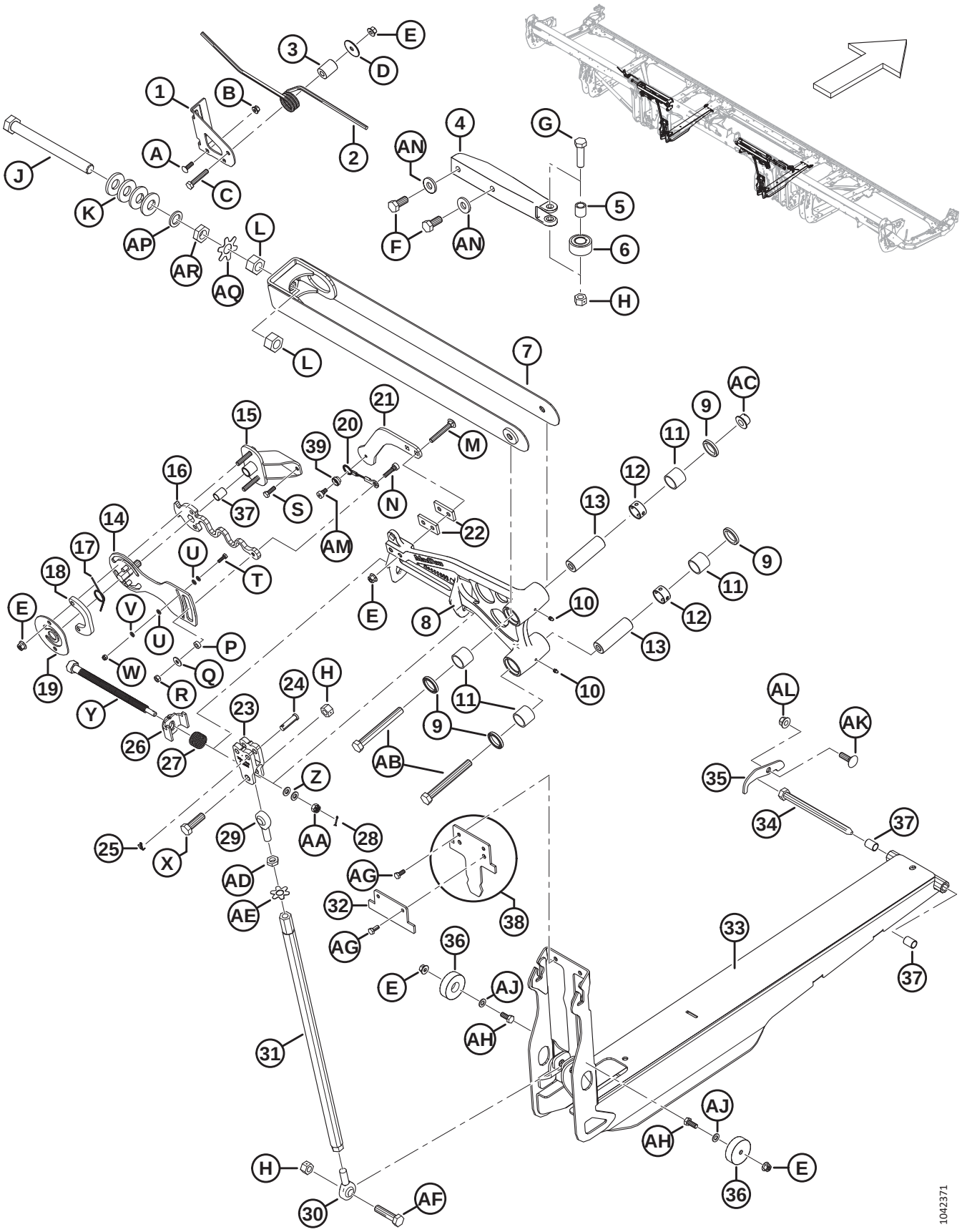

BALANCE LINKAGE

Ref	Part Number	Description	Qty	Serial Number
1	258740	BRACKET – BOLT ON WING LOCK	2	
2	258582	SPRING – WING LOCK	2	
3	258585	SPACER – WING LOCK	2	
4	258627	CASTING – WING STABILIZER MACH	2	
5	229340	BUSHING – WING STABILIZER	2	
6	258041	BEARING – CAM FOLLOWER	2	
7	319508	SUPPORT – TOP LINK WELDT (FD225–FD241) [60]	2	
	258346	SUPPORT – TOP LINK WELDT (FD230–FD241) [61]	2	
	319509	SUPPORT – WIDE TOP LINK WELDT (FD245–FD250) [62]	2	
	258399	SUPPORT – WIDE TOP LINK WELDT (FD245–FD250) [63]	2	
8	335851	BELLCRANK – 25 FT SUB ASSY [64]	2	
	258850	BELLCRANK – 30 FT SUB ASSY [64]	2	
	258849	BELLCRANK – 35 FT SUB ASSY [64]	2	
	258829	BELLCRANK – 40 FT DR SUB ASSY [64]	2	
	258831	BELLCRANK – LH 41 FT SUB ASSY [64]	1	
	258829	BELLCRANK – RH 41 FT SUB ASSY [64]	1	
	258953	BELLCRANK – 40 FT TR SUB ASSY [64]	2	
	258963	BELLCRANK – LH 45 FT SUB ASSY [64]	1	
	258969	BELLCRANK – RH 45 FT SUB ASSY [64]	1	
	258901	BELLCRANK – 50 FT SUB ASSY [64]	**2**	
9	113222	SEAL	8	
10	18671	FITTING – LUBE 1/4 - 28 UNF	4	
11	100500	BEARING – NEEDLE	8	
12	258481	SPACER – BELL CRANK	4	
13	258298	PIN – BELL CRANK	4	
14	258815	PLATE WELDT – FLEX CHECKER	2	
15	258757	ASSY – FLEX CHECKER PIVOT [65]	2	
16	258817	SPRING – FLEX CHECKER	2	
17	258940	SPRING – FLEX ADJUSTER	2	
18	258823	PLATE – FLEX CHECKER SPACER	2	
19	258822	PLATE – FLEX CHECKER RETAINER	2	
20	258986	CABLE – FLEX CHECKER	2	

60. For FD225, and model year 2022 and later FD230–FD241 headers only.
61. For model year 2021 and prior FD230–FD241 headers only.
62. For model year 2022 and later FD245–FD250 headers only.
63. For model year 2021 and prior FD245–FD250 headers only.
64. Includes four seals (MD #113222), two lube fittings (MD #18671), four needle bearings (MD #100500), and two bell crank spacers (MD #258481).
65. Includes bushing (MD #258391).

BALANCE LINKAGE

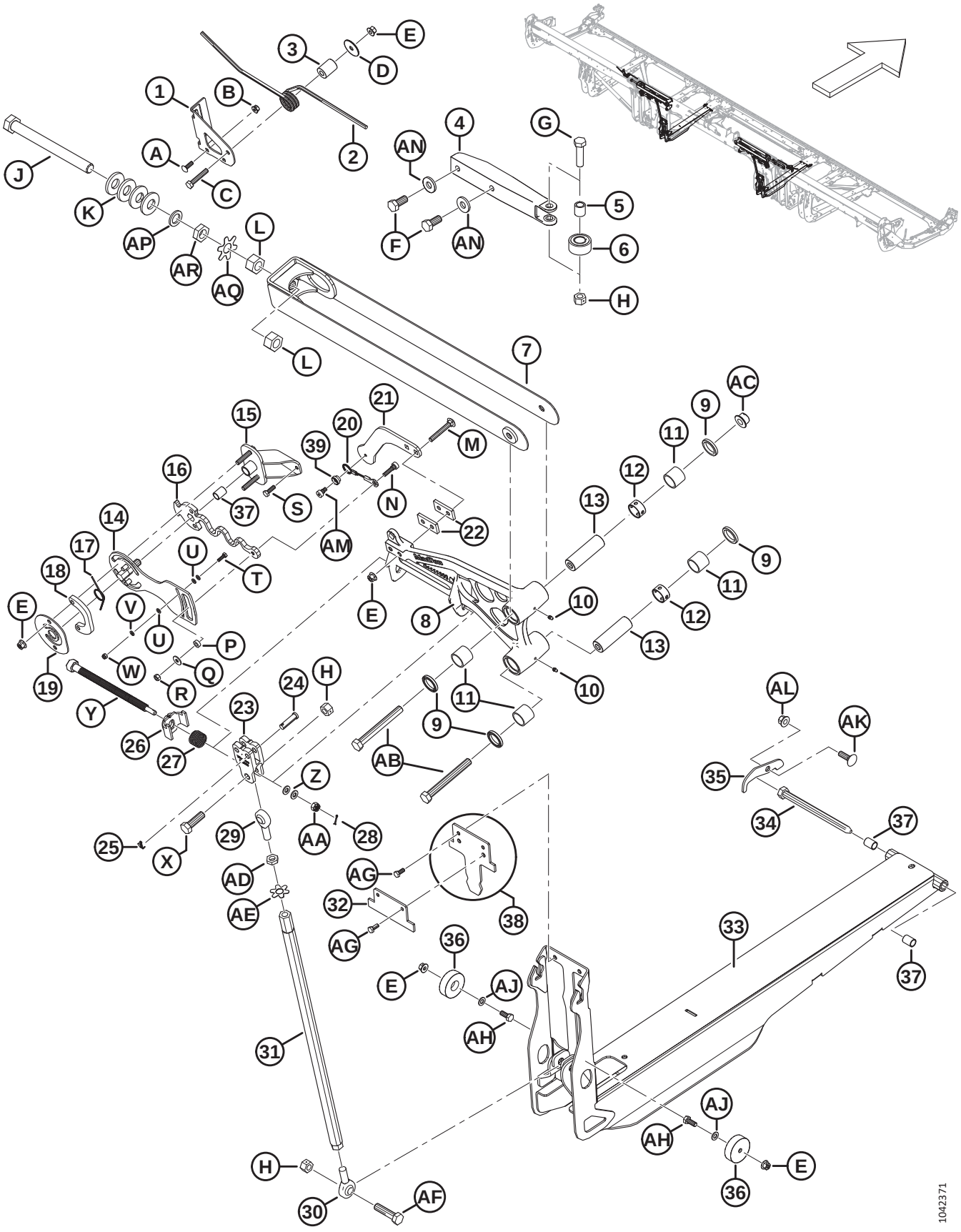

BALANCE LINKAGE

Ref	Part Number	Description	Qty	Serial Number
21	258622	BRACKET – FLEX MEASUREMENT	2	
22	340897	PLATE – FLEX CHECKER SPACER	4	
23	258384	CLEVIS – MACHINED FLEX ADJUSTER	2	
24	184977	PIN – CLEVIS 1/2 IN X 1 3/4 IN ZP	4	
25	18605	PIN – COTTER 1/8 DIA X 1 ZP	4	
26	258761	WELDT – FLEX ADJUSTMENT LOCK	2	
27	258373	SPRING – BELL CRANK LOCK	2	
28	18604	PIN – COTTER 3/32 DIA X 3/4 ZP	2	
29	320109	ROD END – LINK, RH THREAD	2	
30	320110	ROD END – LINK, LH THREAD	2	
31	319474	TUBE WELDT – COMPRESSION LINK	2	
32	340672	PLATE – 25 FT BALANCE CHAN STOP [66]	2	
	258601	PLATE – FLEX FROWN LIMITER [67]	2	
33	319542	BALANCE CHANNEL – C/W BUSHINGS	2	
34	174418	PIN – HEX HD 5/8 X 8.5 LG-AA1J	2	
35	330622	PLATE – FLEX PIN KEEPER	2	
36	258791	GUIDE – PLASTIC	4	
37	258391	BUSHING	6	
38	258990	STOP – 30 FT FLEX LIMITER W/ DECAL (FD230 ONLY) [68]	2	
	258989	DECAL – BALANCE CHANNEL		
39	258980	LOCK – FLEX CHECKING CABLE	2	
A	136824	BOLT – RHSSN M8 X 1.25 X 25-8.8-AA1J		
B	135337	NUT – HEX FLG CTR LK M8 X 1.25-8-AA1J		
C	152193	BOLT – HEX HD M10 X 1.5 X 55 X 8.8-AA1J		
D	258586	WASHER		
E	135799	NUT – HEX FLG CTR LOC M10 X 1.5-10		
F	136137	BOLT – HEX HD TFL M16 X 2 X 35-8.8-AA1J		
G	136141	BOLT – HEX HD M16 X 2 X 60-8.8-AA1J		
H	136476	NUT – HEX CTR LOC M16 X 2-8		
J	320108	BOLT – HEX HD FINE M24 X 1.5 X 250-SPCL-10.9-AA1J		
K	320236	WASHER – CONICAL SPRING, M24-FLAKE		

66. Plate attaches directly to balance channel (MD #319542) on FD225 headers only.
67. Plate attaches directly to balance channel (MD #319542) on FD230, FD235, and FD241 headers. Plate does not exist for triple-reel FD240, FD245, and FD250 headers.
68. Stop is only present on FD230 headers.

BALANCE LINKAGE

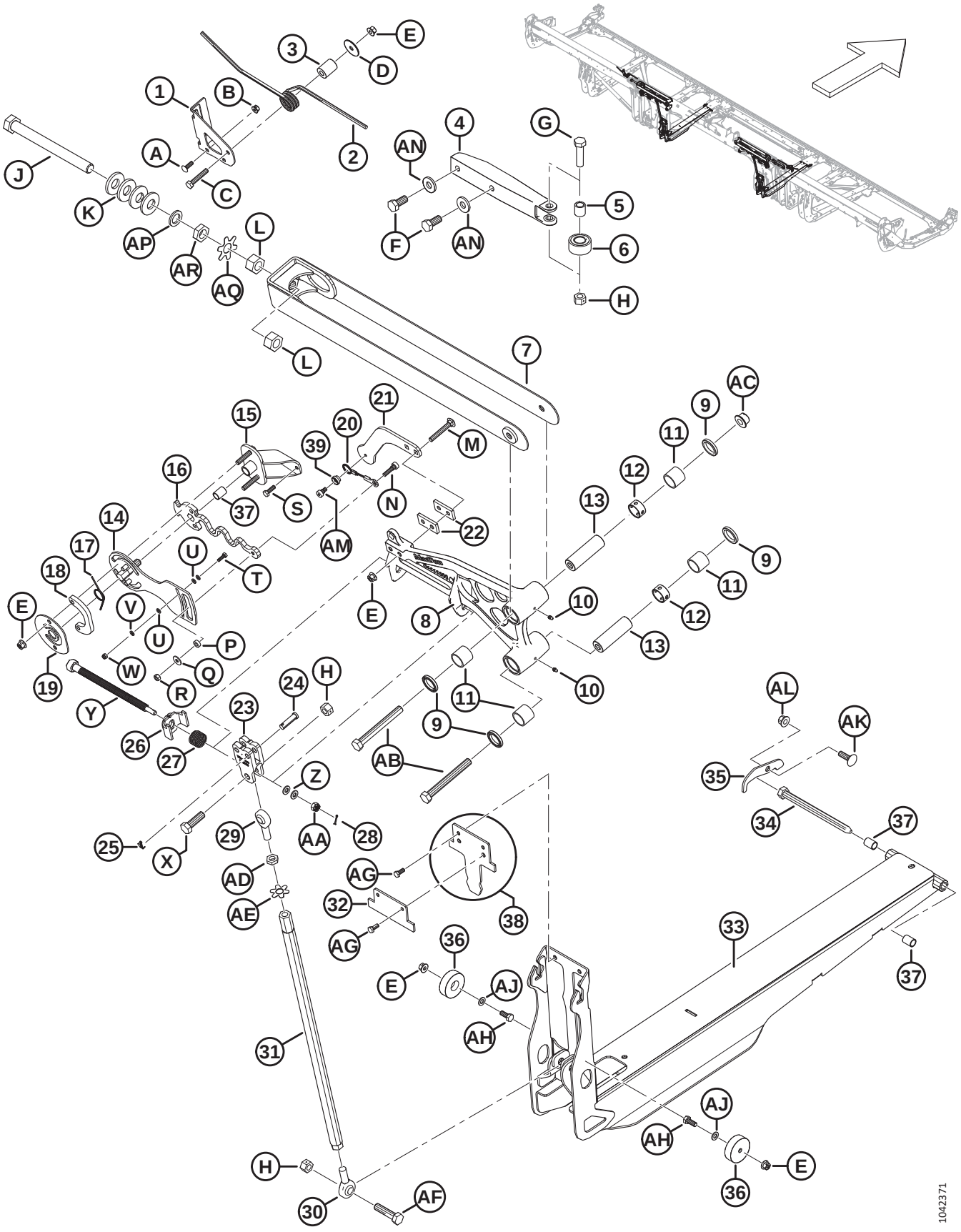

BALANCE LINKAGE

Ref	Part Number	Description	Qty	Serial Number
L	136512	NUT – HEX FINE M24 X 1.5-8-AA1J [69]		
	320486	NUT – HEX FINE M24 X 1.5-10-ZINC [69]		
M	136495	BOLT – RHSN M10 X 1.5 X 70-8.8-AA1J		
N	320160	SCREW – HEX SOC HD SHLDR M10 X 7-M8 X 1.25 X 27-SPCL		
P	258846	WASHER		
Q	184709	WASHER – FLAT LARGE M8-200HV		
R	30856	NUT – HEX M8 X 1.25-9-AA1J		
S	136057	BOLT – HEX HD TFL M8 X 1.25 X 25-10.9-AA1J		
T	184646	BOLT – HEX HD TFL M6 X 1 X 20-8.8-AA1J		
U	184705	WASHER – FLAT M6-200HV-AA1J		
V	30631	WASHER – LOCK SPRING M6		
W	184685	NUT – HEX NYLOC M6 X 1-8-AA1J		
X	184681	BOLT – HEX HD M16 X 2 X 50-8.8-AA1J		
Y	320167	BOLT – HEX HD M16 X 4.0-SPCL-8.8-AA1J		
Z	30655	WASHER – HARD M10-340HV-AB0C		
AA	258758	NUT – HEX SLOTTED M10 X 1.5-8-AA1J		
AB	184677	BOLT – HEX HD M16 X 2 X 140-8.8-AA1J		
AC	152520	NUT – HEX FLG TECH LK M16 X 2-10-AA1J		
AD	136473	NUT – HEX THIN M16 X 2-05-AA1J		
AE	229064	WASHER – M16 TAB		
AF	320199	BOLT – HEX HD M16 X 2 X 65-8.8-ZINC		
AG	30715	BOLT – HEX HD TFL M8 X 1.25 X 20-8.8-AA1J		
AH	30627	BOLT – HEX HD TFL M10 X 1.5 X 25-8.8-A3L		
AJ	184711	WASHER – FLAT REG M10-200HV-AA1J		
AK	135900	BOLT – RHSN TFL M12 X 1.75 X 40-8.8-ZINC		
AL	136431	NUT – HEX FLG CTR LOC M12 X 1.75-10		
AM	320161	SCREW – HEX SOC HD SHLDR M10 X 7-M8 X 1.25 X 9-SPCL		
AN	22072	WASHER – FLAT		
AP	320251	WASHER – FLAT, M24-ZINC		
AQ	360835	PLATE – WASHER TAB M24 NUT		
AR	136513	NUT – HEX THIN FINE M24 X 1.5-8-AA1J		

69. FD225 requires two Class 8 nuts (MD #136512), one per top-link; FD230–FD250 requires four Class 10 nuts (MD #320486), two per top-link.

24 Flex Linkage Shield – Backtube Hinge

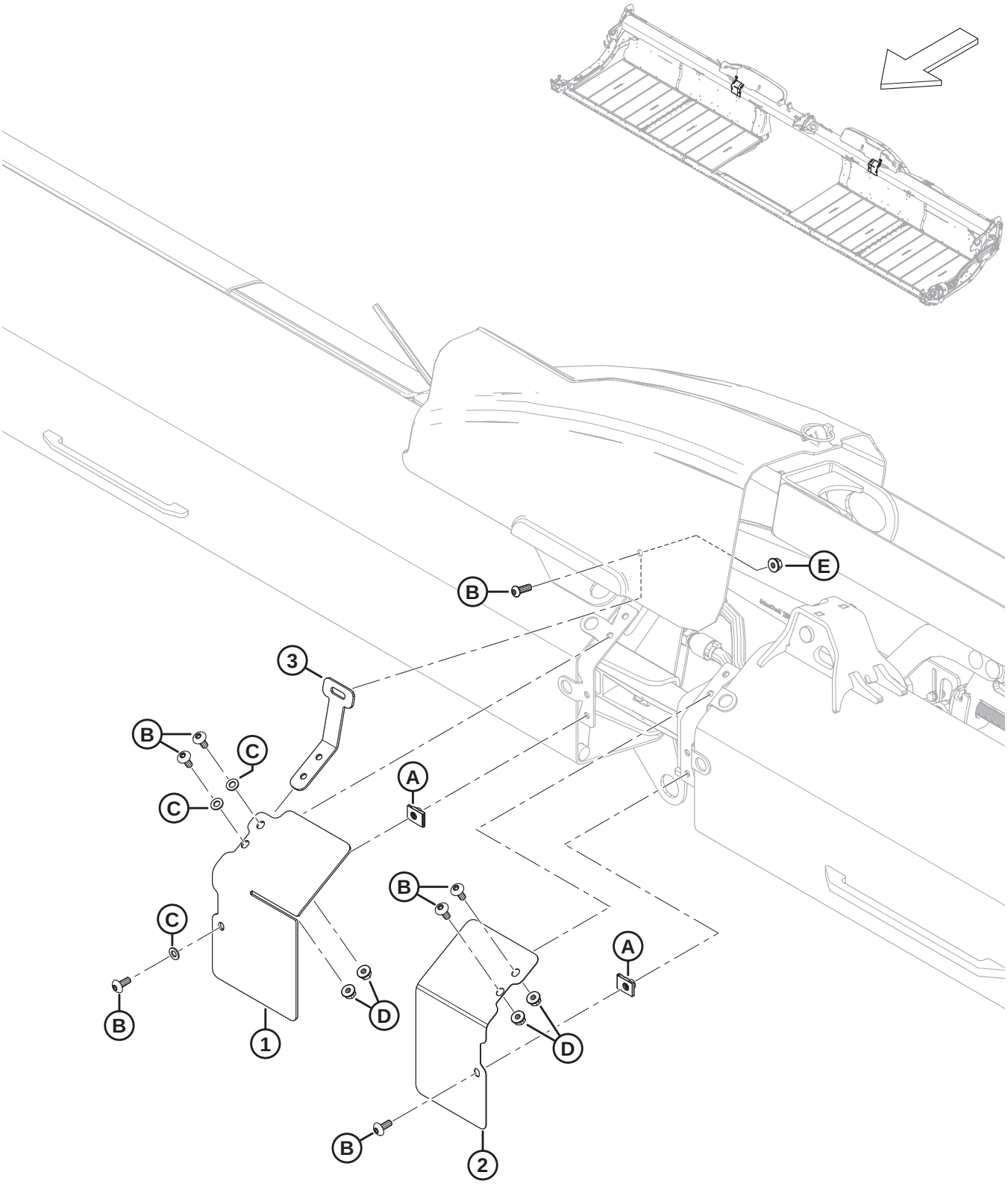

FLEX LINKAGE SHIELD – BACKTUBE HINGE

Ref	Part Number	Description	Qty	Serial Number
1	323086	SHIELD – FRONT TRANSITION, RH WING	1	
	323082	SHIELD – FRONT TRANSITION, LH WING	1	
2	323087	SHIELD – FRONT TRANSITION, RH WING	1	
	323083	SHIELD – FRONT TRANSITION, LH WING	1	
3	258837	BRACKET – FLEX WING SHIELD	2	
A	252839	NUT – CLIP ON M8		
B	320190	SCREW – TORX TRUSS HD M8 X 1.25 X 20-SPCL-8.8-ZINC		
C	184708	WASHER – FLAT M8-200HV-AA1J		
D	135337	NUT – HEX FLG CTR LK M8 X 1.25-8-AA1J		
E	135337	NUT – HEX FLG CTR LK M8 X 1.25-8-AA1J		

25 Flex Linkage Shield – Single Reel (FD225) and Double Reel (FD230, FD235, FD240, and FD241)

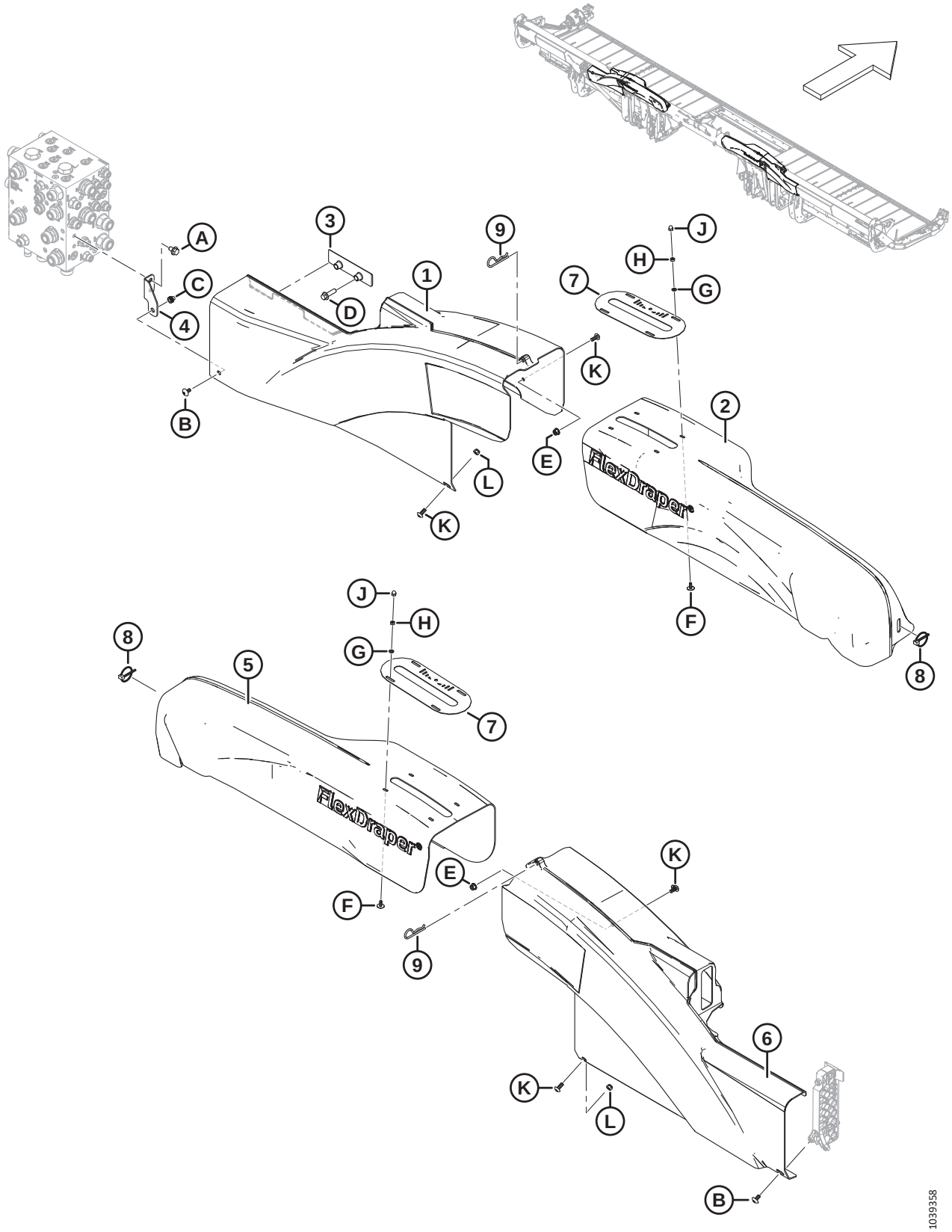

1039358

FLEX LINKAGE SHIELD – SINGLE REEL (FD225) AND DOUBLE REEL (FD230, FD235, FD240, AND FD241)

Ref	Part Number	Description	Qty	Serial Number
1	323032	SHIELD – LH WING	1	
2	258997	SHIELD – LH NF DR BELLCRANK	1	
3	283849	BRACKET – HYD COVER SUPPORT	1	
4	323773	ASSY – RH SHIELD BRACKET [70]	1	
5	258998	SHIELD – RH NF DR BELLCRANK	1	
6	323051	SHIELD – RH WING	1	
7	360299	GAUGE – FLEX POSITION	2	
8	102264	PIN – LYNCH 3/16 X 1 9/16 IN.	2	
9	13125	PIN – HAIR	2	
A	136151	BOLT – HEX FLG HD TFL M10 X 1.5 X 16-8.8-AA1J		
B	320336	SCREW – TORX TRUSS HD M8 X 1.25 X 16-SPCL-8.8-AA1T		
C	320448	RIVNUT – M8 X 1.25 HEX		
D	136211	BOLT – HEX FLG HD M10 X 1.5 X 35-8.8-AA1J		
E	135337	NUT – HEX FLG CTR LK M8 X 1.25-8-AA1J		
F	320148	SCREW – TRUSS SLT HD M6 X 1.0 X 16-SPCL-8.8-ZINC		
G	184705	WASHER – FLAT M6-200HV-AA1J		
H	184683	NUT – HEX ISO 4032 M6 X 1-8-ZINC		
J	320246	NUT – ACORN M6 X 1.0-8-ZINC		
K	320190	SCREW – TORX TRUSS HD M8 X 1.25 X 20-SPCL-8.8-ZINC		
L	184688	NUT – HEX NYLOC M8 X 1.25-8-AA1J		

70. The assembly includes RH shield mounting bracket (NSS) and rivnut (MD #320448). Model year 2022 and prior machines with superseded bracket (MD #283704) used M10 bolt (MD #152655) and nyloc nuts (MD #252807) to secure the LH wing shield to the shield bracket. For model year 2023 and later machines, or for machines that have been serviced with shield bracket assembly (MD #323773), order M8 screw (MD #320336).

26 Flex Linkage Shield – Triple Reel (FD240)

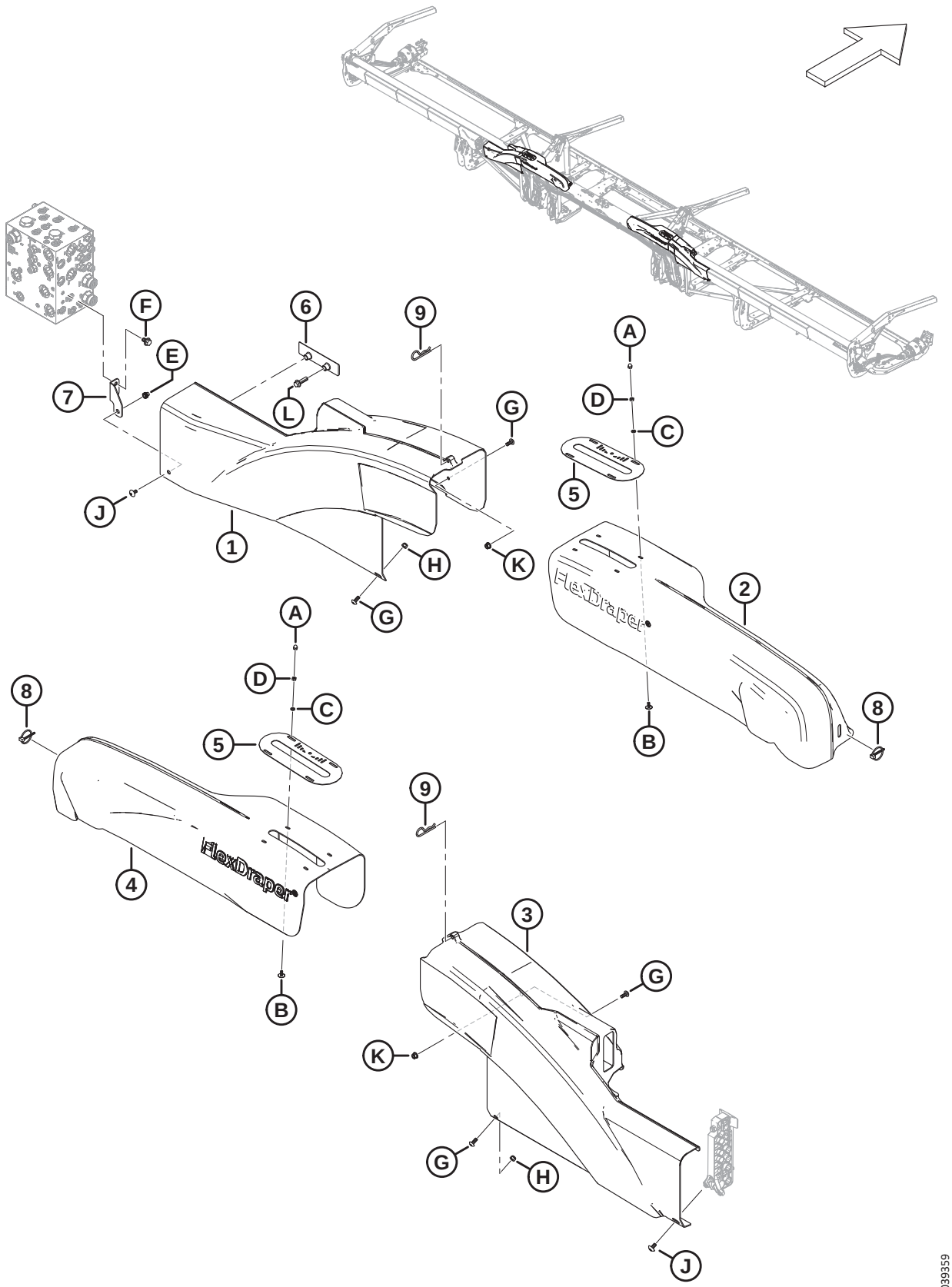

FLEX LINKAGE SHIELD – TRIPLE REEL (FD240)

Ref	Part Number	Description	Qty	Serial Number
1	323032	SHIELD – LH WING	1	
2	323157	SHIELD – LH NF TR BELLCRANK	1	
3	323051	SHIELD – RH WING	1	
4	323158	SHIELD – RH NF TR BELLCRANK	1	
5	360299	GAUGE – FLEX POSITION	2	
6	283849	BRACKET – HYD COVER SUPPORT	1	
7	323773	ASSY – RH SHIELD BRACKET [71]	1	
8	102264	PIN – LYNCH 3/16 X 1 9/16 IN.	2	
9	13125	PIN – HAIR	2	
A	320246	NUT – ACORN M6 X 1.0-8-ZINC		
B	320148	SCREW – TRUSS SLT HD M6 X 1.0 X 16-SPCL-8.8-ZINC		
C	184705	WASHER – FLAT M6-200HV-AA1J		
D	184683	NUT – HEX ISO 4032 M6 X 1-8-ZINC		
E	320448	RIVNUT – M8 X 1.25 HEX		
F	136151	BOLT – HEX FLG HD TFL M10 X 1.5 X 16-8.8-AA1J		
G	320190	SCREW – TORX TRUSS HD M8 X 1.25 X 20-SPCL-8.8-ZINC		
H	184688	NUT – HEX NYLOC M8 X 1.25-8-AA1J		
J	320336	SCREW – TORX TRUSS HD M8 X 1.25 X 16-SPCL-8.8-AA1T		
K	135337	NUT – HEX FLG CTR LK M8 X 1.25-8-AA1J		
L	136211	BOLT – HEX FLG HD M10 X 1.5 X 35-8.8-AA1J		

71. The assembly includes RH shield mounting bracket (NSS) and rivnut (MD #320448). Model year 2022 and prior machines with superseded bracket (MD #283704) used M10 bolt (MD #152655) and nyloc nuts (MD #252807) to secure the LH wing shield to the shield bracket. For model year 2023 and later machines, or for machines that have been serviced with shield bracket assembly (MD #323773), order M8 screw (MD #320336).

27 Flex Linkage Shield – Triple Reel (FD245 and FD250)

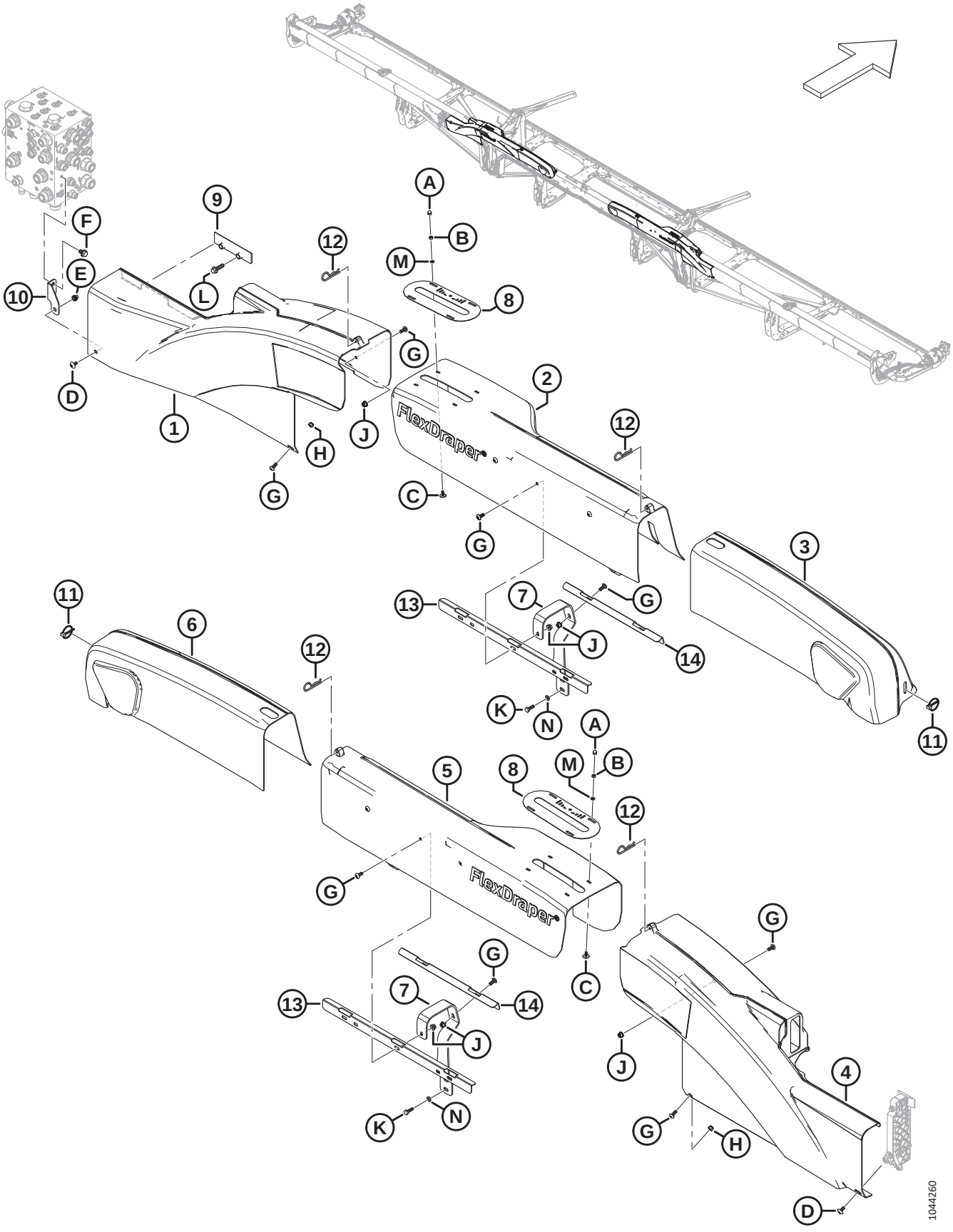

FLEX LINKAGE SHIELD – TRIPLE REEL (FD245 AND FD250)

Ref	Part Number	Description	Qty	Serial Number
1	323032	SHIELD – LH WING	1	
2	319563	SHIELD – WF TR LH FLEX LINKAGE	1	
3	258893	SHIELD – TR LH FLEX LINKAGE	1	
4	323051	SHIELD – RH WING	1	
5	319564	SHIELD – WF TR RH FLEX LINKAGE	1	
6	258932	SHIELD – TR RH FLEX LINKAGE	1	
7	319550	BRACKET – LINKAGE SHIELD	4	
8	360299	GAUGE – FLEX POSITION	2	
9	283849	BRACKET – HYD COVER SUPPORT	1	
10	323773	ASSY – RH SHIELD BRACKET [72]	1	
11	102264	PIN – LYNCH 3/16 X 1 9/16 IN.	2	
12	13125	PIN – HAIR	4	
13	319548	BRACE – TR SHIELDS	2	
14	319549	BRACE – TR SHIELDS FRONT	2	
A	320246	NUT – ACORN M6 X 1.0-8-ZINC		
B	184683	NUT – HEX ISO 4032 M6 X 1-8-AA1J		
C	320148	SCREW – TRUSS SLT HD M6 X 1.0 X 16-SPCL-8.8-ZINC		
D	320336	SCREW – TORX TRUSS HD M8 X 1.25 X 16-SPCL-8.8-AA1T		
E	320448	RIVNUT – M8 X 1.25 HEX		
F	136151	BOLT – HEX FLG HD TFL M10 X 1.5 X 16-8.8-AA1J		
G	320190	SCREW – TORX TRUSS HD M8 X 1.25 X 20-SPCL-8.8-ZINC		
H	184688	NUT – HEX NYLOC M8 X 1.25-8-AA1J		
J	135337	NUT – HEX FLG CTR LK M8 X 1.25-8-AA1J		
K	136057	BOLT – HEX HD TFL M8 X 1.25 X 25-10.9-AA1J		
L	136211	BOLT – HEX FLG HD M10 X 1.5 X 35-8.8-AA1J		
M	184705	WASHER – FLAT M6-200HV-AA1J		
N	184708	WASHER – FLAT M8-200HV-AA1J		

72. The assembly includes RH shield mounting bracket (NSS) and rivnut (MD #320448). Model year 2022 and prior machines with superseded bracket (MD #283704) used M10 bolt (MD #152655) and nyloc nuts (MD #252807) to secure the LH wing shield to the shield bracket. For model year 2023 and later machines, or for machines that have been serviced with shield bracket assembly (MD #323773), order M8 screw (MD #320336).

28 Guards, Hold-Downs, and Cutterbar Shoes – Single Knife, Pointed (FD225, FD230, FD235, and FD240)

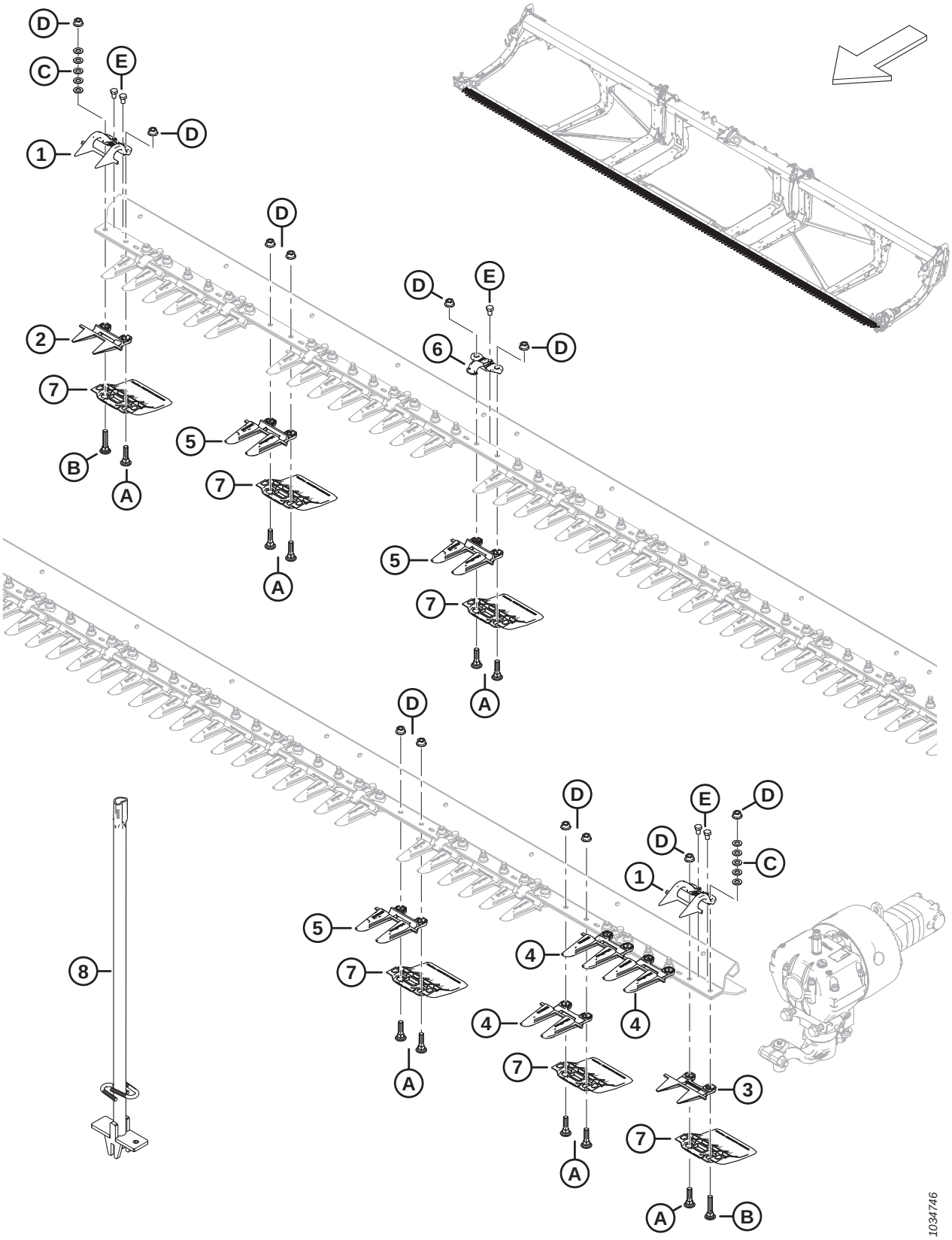

Ref	Part Number	Description	Qty	Serial Number
	286668	KIT – POINTED GUARDS 25 FT SK [73]	A/R	
	286669	KIT – POINTED GUARDS 30 FT SK [74]	A/R	
	286670	KIT – POINTED GUARDS 35 FT SK [75]	A/R	
	286671	KIT – POINTED GUARDS 40 FT SK [76]	A/R	
1	286331	HOLD-DOWN – PLUG FREE END	2	
2	286318	KNIFE GUARD – PLUG FREE SHORT	1	
3	286319	KNIFE GUARD – PLUG FREE END	1	
4	286316	KNIFE GUARD – POINTED END	3	
5	286315	KNIFE GUARD – POINTED [77]		
6	286329	HOLD-DOWN – POINTED [78]		
7	286257	SHOE – WEARPLATE CUTTERBAR [79]		
8	286705	TOOL – WELDT	A/R	
A	226295	BOLT – RHSN SPCL M12 X 47-8.8		
B	226280	BOLT – RHSN SPCL M12 X 60-8.8		
C	184714	WASHER – FLAT REG M12-300HV		
D	136036	NUT – HEX SM FLG M12 X 1.75-8-AA1J		
E	136005	BOLT – HEX HD FINE TFL M10 X 1.25 X 16-8.8-AA1J		

73. The kit includes 45 pointed guards (MD #286315), 3 pointed end guards (MD #286316), 1 PlugFree™ guard (MD #286318), and 1 PlugFree™ end guard (MD #286319).
74. The kit includes 55 pointed guards (MD #286315), 3 pointed end guards (MD #286316), 1 PlugFree™ guard (MD #286318), and 1 PlugFree™ end guard (MD #286319).
75. The kit includes 65 pointed guards (MD #286315), 3 pointed end guards (MD #286316), 1 PlugFree guard (MD #286318), and 1 PlugFree™ end guard (MD #286319).
76. The kit includes 75 pointed guards (MD #286315), 3 pointed end guards (MD #286316), 1 PlugFree™ guard (MD #286318), and 1 PlugFree™ end guard (MD #286319).
77. Quantities: FD225 = 45, FD230 = 55, FD235 = 65, and FD240 = 75.
78. Quantities: FD225 = 24, FD230 = 29, FD235 = 34, and FD240 = 39.
79. Quantities: FD225 = 50, FD230 = 60, FD235 = 70, and FD240 = 80.

29 Guards, Hold-Downs, and Cutterbar Shoes – Double Knife, Pointed (FD235, FD240, FD241, FD245, and FD250)

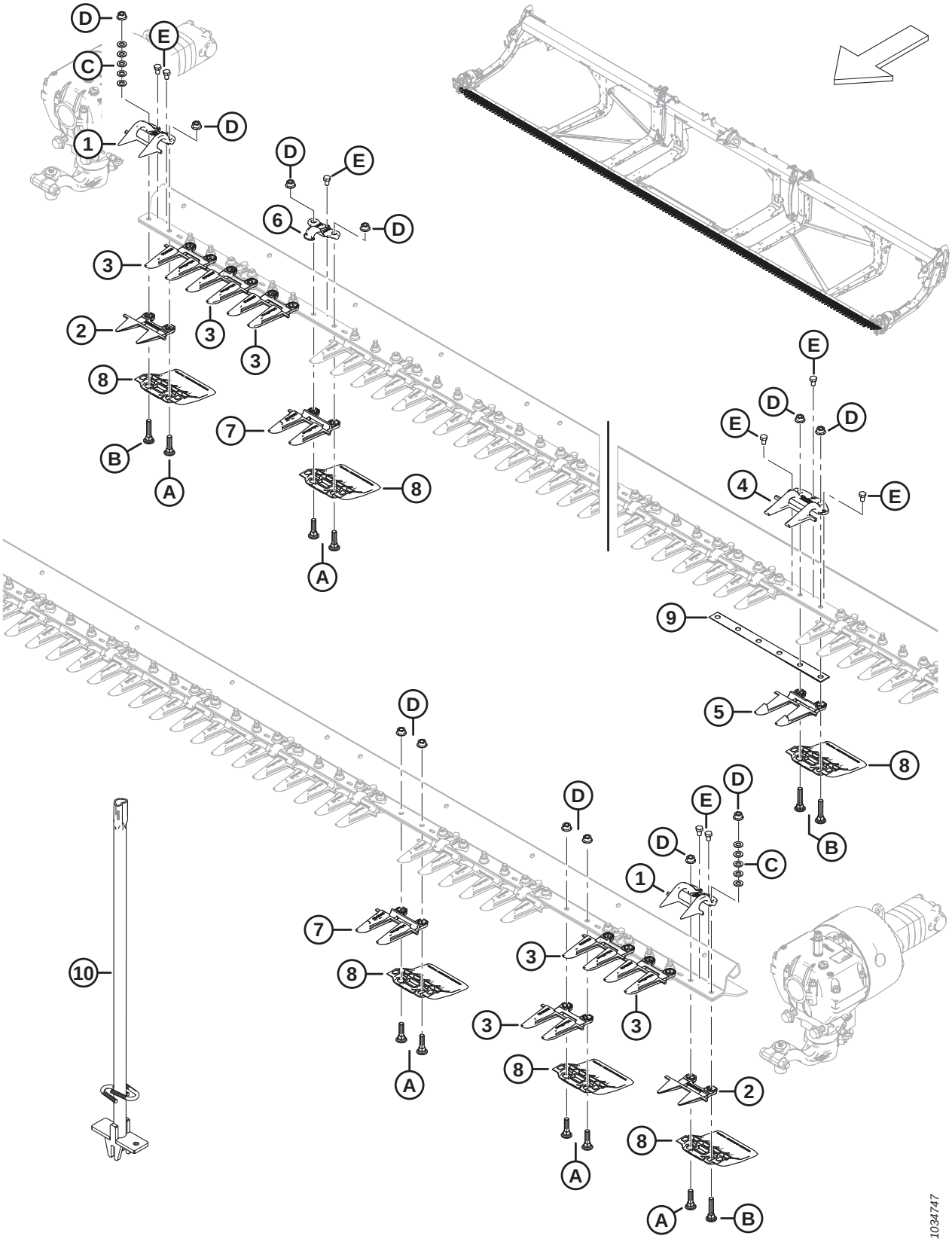

GUARDS, HOLD-DOWNS, AND CUTTERBAR SHOES – DOUBLE KNIFE, POINTED (FD235, FD240, FD241, FD245, AND FD250)

Ref	Part Number	Description	Qty	Serial Number
	286663	KIT – POINTED GUARDS 35 FT DK [80]	A/R	
	286664	KIT – POINTED GUARDS 40 FT DK [81]	A/R	
	286665	KIT – POINTED GUARDS 41 FT DK [82]	A/R	
	286666	KIT – POINTED GUARDS 45 FT DK [83]	A/R	
	286667	KIT – POINTED GUARDS 50 FT DK [84]	A/R	
1	286331	HOLD-DOWN – PLUG FREE END	2	
2	286319	KNIFE GUARD – PLUG FREE END	2	
3	286316	KNIFE GUARD – POINTED END	6	
4	286332	HOLD-DOWN – POINTED CENTER	1	
5	286317	KNIFE GUARD – POINTED CENTER	1	
6	286329	HOLD-DOWN – POINTED [85]		
7	286315	KNIFE GUARD – POINTED [86]		
8	286257	SHOE – WEARPLATE CUTTERBAR [87]		
9	226861	SHIM – DK OVERLAP	1	
10	286705	TOOL – WELDT	A/R	
A	226295	BOLT – RHSN SPCL M12 X 47-8.8		
B	226280	BOLT – RHSN SPCL M12 X 60-8.8		
C	184714	WASHER – FLAT REG M12-300HV		
D	136036	NUT – HEX SM FLG M12 X 1.75-8-AA1J		
E	136005	BOLT – HEX HD FINE TFL M10 X 1.25 X 16-8.8-AA1J		

80. The kit includes 61 pointed guards (MD #286315), 6 pointed end guards (MD #286316), 1 pointed center guard (MD #286317), 2 PlugFree™ end guards (MD #286319), and 1 pointed center hold-down (MD #286332).
81. The kit includes 71 pointed guards (MD #286315), 6 pointed end guards (MD #286316), 1 pointed center guard (MD #286317), 2 PlugFree™ end guards (MD #286319), and 1 pointed center hold-down (MD #286332).
82. The kit includes 73 pointed guards (MD #286315), 6 pointed end guards (MD #286316), 1 pointed center guard (MD #286317), 2 PlugFree™ end guards (MD #286319), and 1 pointed center hold-down (MD #286332).
83. The kit includes 81 pointed guards (MD #286315), 6 pointed end guards (MD #286316), 1 pointed center guard (MD #286317), 2 PlugFree™ end guards (MD #286319), and 1 pointed center hold-down (MD #286332).
84. The kit includes 91 pointed guards (MD #286315), 6 pointed end guards (MD #286316), 1 pointed center guard (MD #286317), 2 PlugFree™ end guards (MD #286319), and 1 pointed center hold-down (MD #286332).
85. Quantities: FD235 = 34, FD240 = 38, FD241 = 39, FD245 = 44, and FD250 = 48.
86. Quantities: FD235 = 61, FD240 = 71, FD241 = 73, FD245 = 81, and FD250 = 91.
87. Quantities: FD235 = 70, FD240 = 80, FD241 = 82, FD245 = 90, and FD250 = 100.

30 Guards, Hold-Downs, and Cutterbar Shoes – Single Knife, PlugFree™ (FD225, FD230, FD235, and FD240)

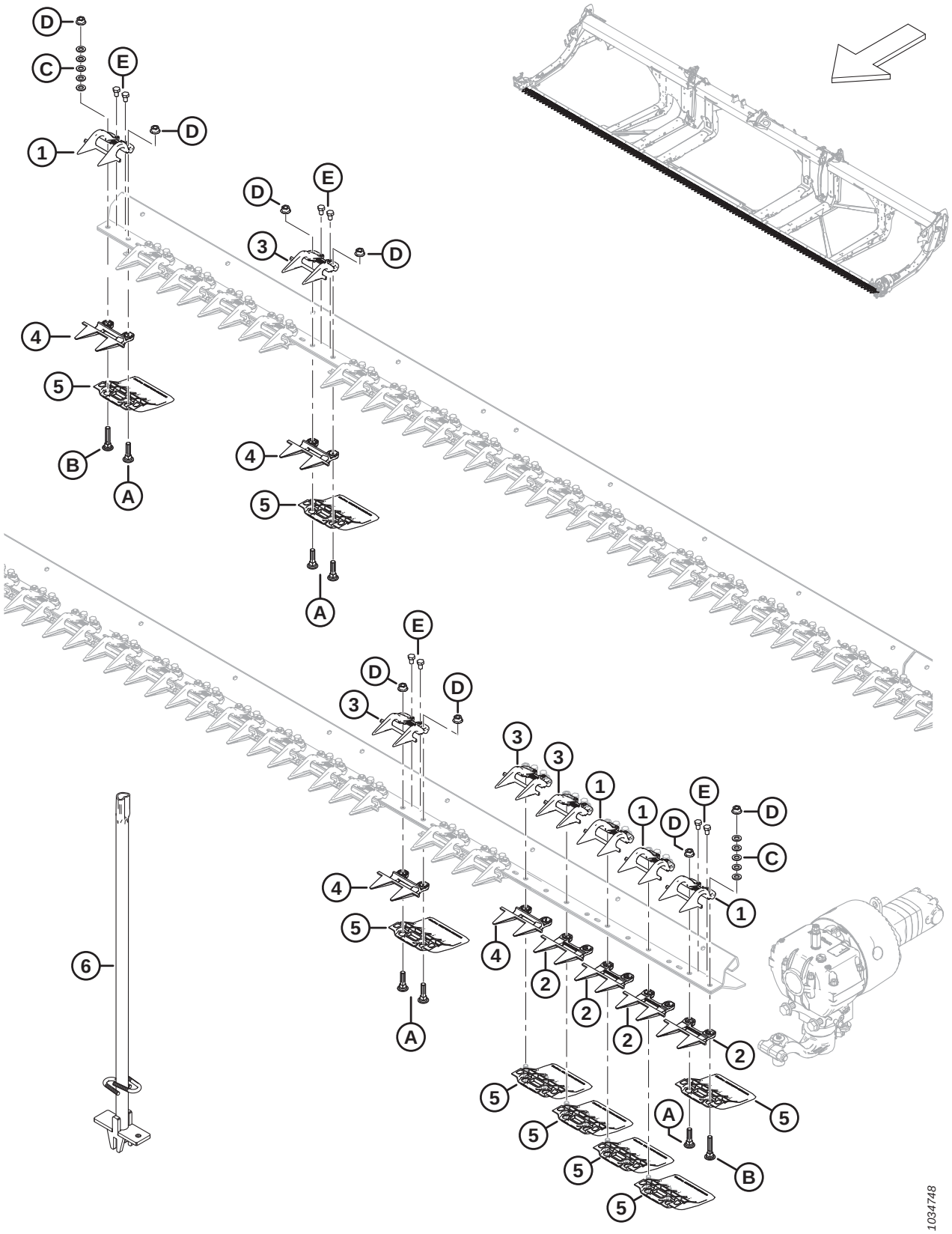

Ref	Part Number	Description	Qty	Serial Number
	286679	KIT – PLUGFREE GUARDS 25 FT SK [88]	A/R	
	286680	KIT – PLUGFREE GUARDS 30 FT SK [89]	A/R	
	286681	KIT – PLUGFREE GUARDS 35 FT SK [90]	A/R	
	286682	KIT – PLUGFREE GUARDS 40 FT SK [91]	A/R	
1	286331	HOLD-DOWN – PLUG FREE END	4	
2	286319	KNIFE GUARD – PLUG FREE END	4	
3	286330	HOLD-DOWN – PLUG FREE [92]		
4	286318	KNIFE GUARD – PLUG FREE SHORT [92]		
5	286257	SHOE – WEARPLATE CUTTERBAR [93]		
6	286705	TOOL – WELDT	A/R	
A	226295	BOLT – RHSN SPCL M12 X 47-8.8		
B	226280	BOLT – RHSN SPCL M12 X 60-8.8		
C	184714	WASHER – FLAT REG M12-300HV		
D	136036	NUT – HEX SM FLG M12 X 1.75-8-AA1J		
E	136005	BOLT – HEX HD FINE TFL M10 X 1.25 X 16-8.8-AA1J		

88. The kit includes 46 PlugFree™ guards (MD #286318) and 4 end guards (MD #286319).
89. The kit includes 56 PlugFree™ guards (MD #286318) and 4 end guards (MD #286319).
90. The kit includes 66 PlugFree™ guards (MD #286318) and 4 end guards (MD #286319).
91. The kit includes 76 PlugFree™ guards (MD #286318) and 4 end guards (MD #286319).
92. Quantities: FD225 = 46, FD230 = 56, FD235 = 66, and FD240 = 76.
93. Quantities: FD225 = 50, FD230 = 60, FD235 = 70, and FD240 = 80.

31 Guards, Hold-Downs, and Cutterbar Shoes – Double Knife, PlugFree™ (FD240, FD241, FD245, and FD250)

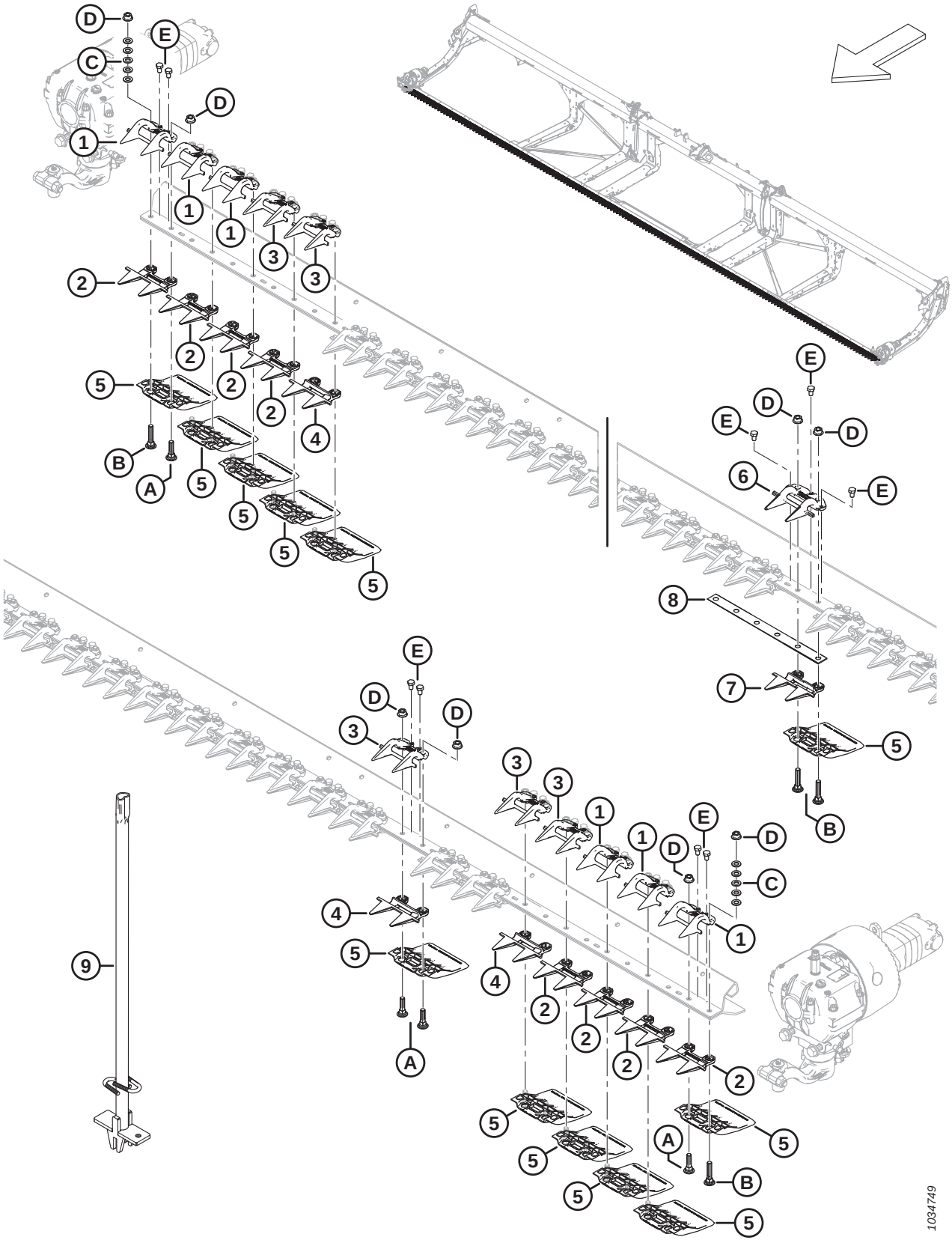

Ref	Part Number	Description	Qty	Serial Number
	286673	KIT – PLUGFREE GUARDS 30 FT DK [94]	A/R	
	286674	KIT – PLUGFREE GUARDS 35 FT DK [95]	A/R	
	286675	KIT – PLUGFREE GUARDS 40 FT DK [96]	A/R	
	286676	KIT – PLUGFREE GUARDS 41 FT DK [97]	A/R	
	286677	KIT – PLUGFREE GUARDS 45 FT DK [98]	A/R	
	286678	KIT – PLUGFREE GUARDS 50 FT DK [99]	A/R	
1	286331	HOLD-DOWN – PLUG FREE END	6	
2	286319	KNIFE GUARD – PLUG FREE END	8	
3	286330	HOLD-DOWN – PLUG FREE [100]		
4	286318	KNIFE GUARD – PLUG FREE SHORT [101]		
5	286257	SHOE – WEARPLATE CUTTERBAR [102]		
6	286333	HOLD-DOWN – PLUG FREE CENTER	1	
7	286320	KNIFE GUARD – PLUG FREE CENTER	1	
8	226861	SHIM – DK OVERLAP	1	
9	286705	TOOL – WELDT	A/R	
A	226295	BOLT – RHSN SPCL M12 X 47-8.8		
B	226280	BOLT – RHSN SPCL M12 X 60-8.8		
C	184714	WASHER – FLAT REG M12-300HV		
D	136036	NUT – HEX SM FLG M12 X 1.75-8-AA1J		
E	136005	BOLT – HEX HD FINE TFL M10 X 1.25 X 16-8.8-AA1J		

94. The kit includes 51 PlugFree™ guards (MD #286318), 8 end guards (MD #286319), 1 center guard (MD #286320), and 1 center hold-down (MD #286333).
95. The kit includes 61 PlugFree™ guards (MD #286318), 8 end guards (MD #286319), 1 center guard (MD #286320), and 1 center hold-down (MD #286333).
96. The kit includes 71 PlugFree™ guards (MD #286318), 8 end guards (MD #286319), 1 center guard (MD #286320), and 1 center hold-down (MD #286333).
97. The kit includes 73 PlugFree™ guards (MD #286318), 8 end guards (MD #286319), 1 center guard (MD #286320), and 1 center hold-down (MD #286333).
98. The kit includes 81 PlugFree™ guards (MD #286318), 8 end guards (MD #286319), 1 center guard (MD #286320), and 1 center hold-down (MD #286333).
99. The kit includes 91 PlugFree™ guards (MD #286318), 8 end guards (MD #286319), 1 center guard (MD #286320), and 1 center hold-down (MD #286333).
100. Quantities: FD240 = 73, FD241 = 75, FD245 = 83, and FD250 = 93.
101. Quantities: FD240 = 71, FD241 = 73, FD245 = 81, and FD250 = 91.
102. Quantities: FD240 = 80, FD241 = 82, FD245 = 90, and FD250 = 100.

32 Knives – Single-Knife Headers (FD225)

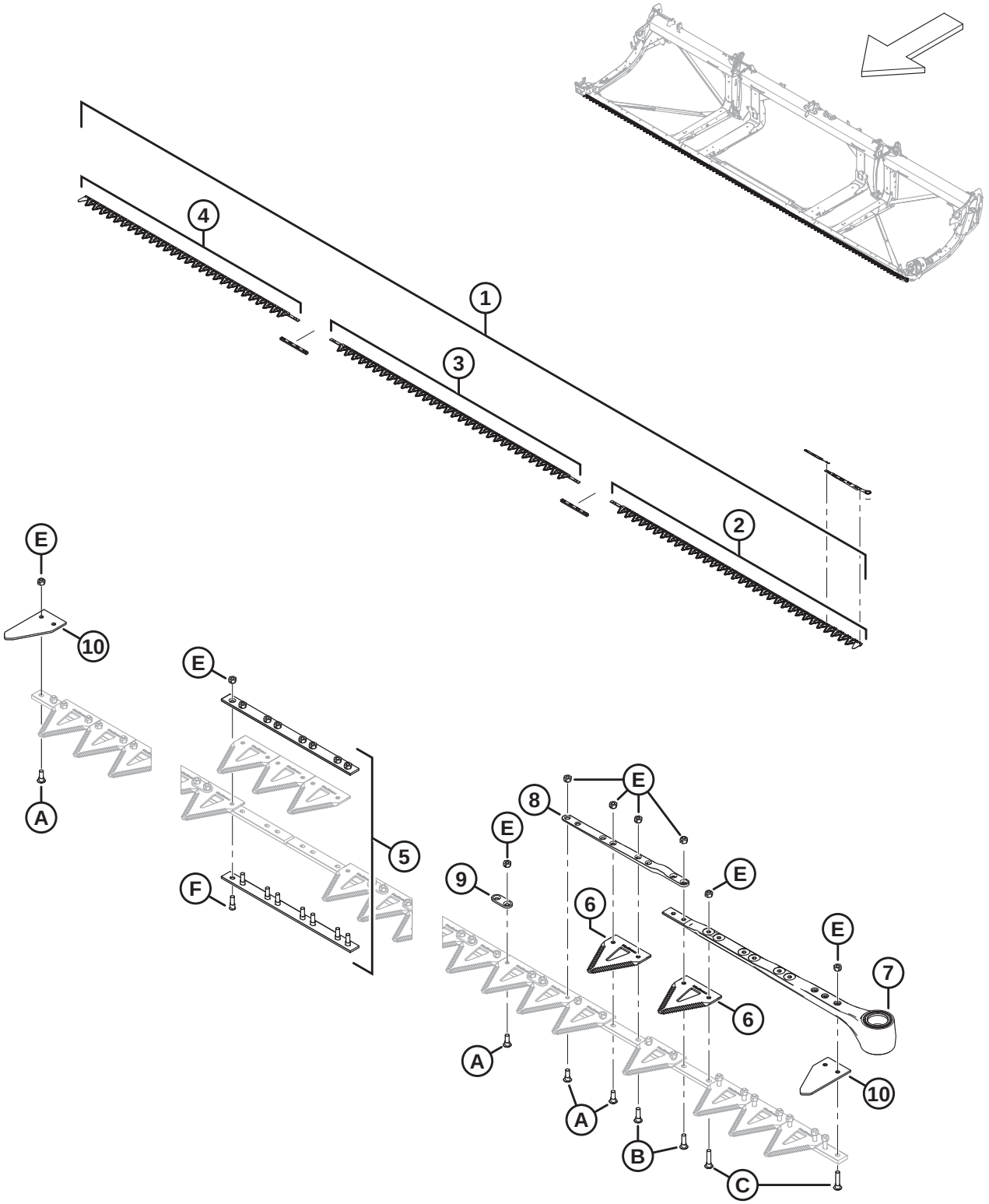

1039416

Ref	Part Number	Description	Qty	Serial Number
1	286597	KIT – KNIFE 25 FT SK COARSE [103]	1	
	286609	KIT – KNIFE 25 FT SK FINE [104]	OPT	
	286779	KIT – KNIFE 25 FT SK ULTRA COARSE [105]	OPT	
2	286562	KNIFE – HEAD SEGMENT LH COARSE 2676 MM	1	
	286579	KNIFE – HEAD SEGMENT LH FINE 2676 MM	OPT	
	286758	KNIFE – HEAD SEGMENT LH ULTRA COARSE 2676 MM	OPT	
3	286564	KNIFE – CENTER SEGMENT COARSE 2663 MM	1	
	286581	KNIFE – CENTER SEGMENT FINE 2663 MM	OPT	
	286760	KNIFE – CENTER SEGMENT ULTRA COARSE 2663 MM	OPT	
4	286566	KNIFE – TAIL SEGMENT SK COARSE 2295 MM	1	
	286583	KNIFE – TAIL SEGMENT SK FINE 2295 MM	OPT	
	286763	KNIFE – TAIL SEGMENT SK ULTRA COARSE 2295 MM	OPT	
5	286493	KIT – KNIFE SPLICE	2	
6	286461	SECTION – CLEARCUT COARSE (25 PACK) [106]		
	286462	SECTION – CLEARCUT FINE (25 PACK) [106]	OPT	
	286627	SECTION – CLEARCUT ULTRA COARSE (25 PACK) [106]	OPT	
7	226941	KNIFE HEAD ASSEMBLY	1	
	115670	O-RING – 1.78 X 34.64	1	
	113937	DISC	1	
	113222	SEAL KIT	1	
	100500	BEARING – NEEDLE	1	
8	286440	BAR – FORGED	1	
9	286481	BAR – REINFORCEMENT (25 PACK)		
10	226983	SECTION – END	2	
A	286475	SCREW – M6 X 18 MM, C/W NUT (50 PACK)		
B	286476	SCREW – M6 X 22 MM, C/W NUT (25 PACK)		
C	286477	SCREW – M6 X 29 MM, C/W NUT (25 PACK)		
D	286478	SCREW – CSK M6 X 14 MM, C/W NUT (25 PACK)		

103. The kit includes one 25-pack of ClearCut™ coarse sections (MD #286461), two knife splice kits (MD #286493), one LH coarse knife head segment (MD #286562), one center coarse knife segment (MD #286564), and one tail coarse knife segment (MD #286566).
104. The kit includes one 25-pack of ClearCut™ fine sections (MD #286462), two knife splice kits (MD #286493), one LH fine knife head segment (MD #286579), one center fine knife segment (MD #286581), and one tail fine knife segment (MD #286583).
105. The kit includes one 25-pack of ClearCut™ ultra coarse sections (MD #286627), two knife splice kits (MD #286493), one LH ultra coarse knife head segment (MD #286758), one center ultra coarse knife segment (MD #286760), and one tail ultra coarse knife segment (MD #286763).
106. Section quantity is 99.

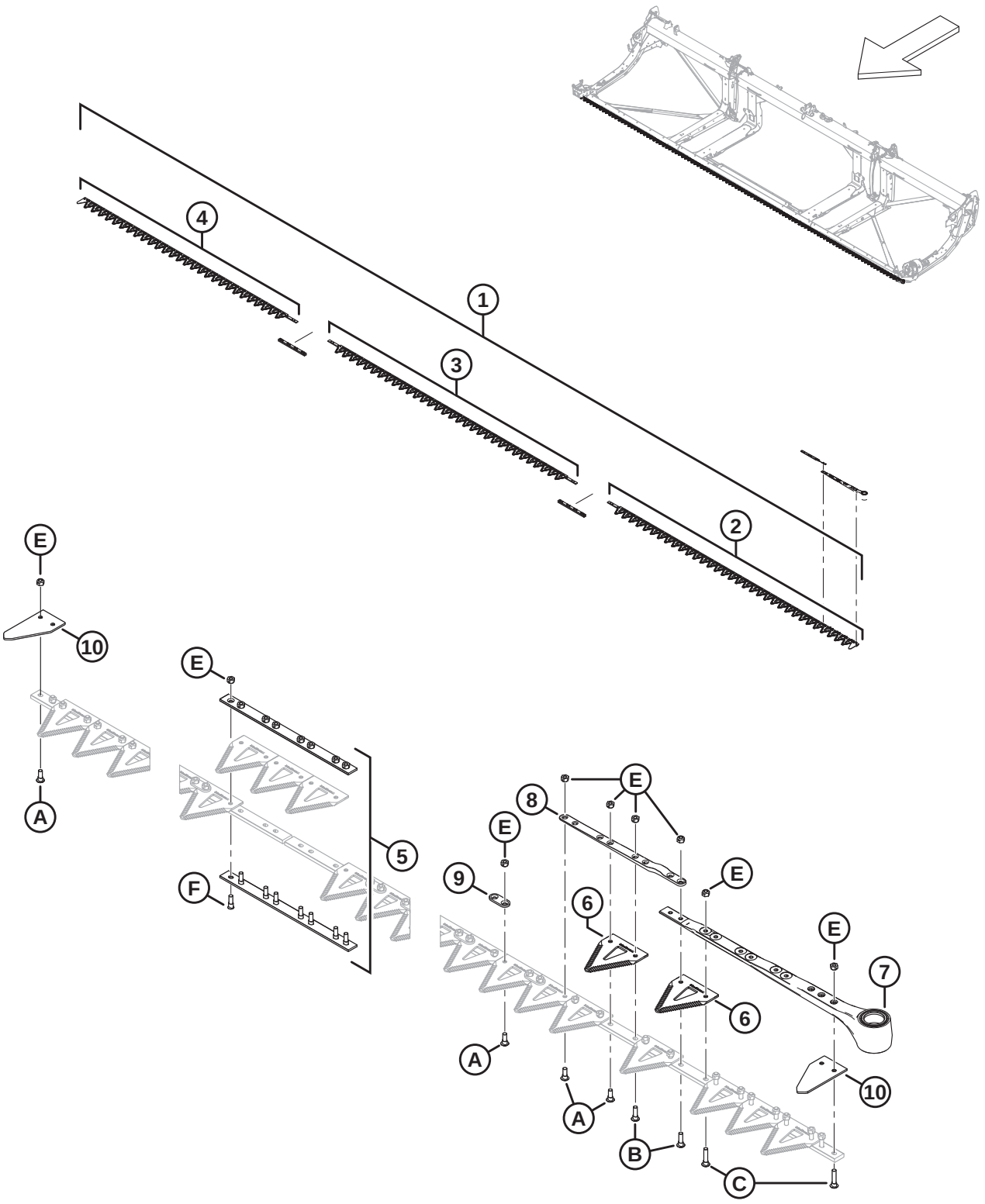

1039416

Ref	Part Number	Description	Qty	Serial Number
E	286479	NUT – CTR LOC CSK M6 X 1 (50 PACK)		
F	286621	SCREW – CSK M6 X 22 MM, C/W NUT (25 PACK)		

33 Knives – Single-Knife Headers (FD230, FD235, and FD240)

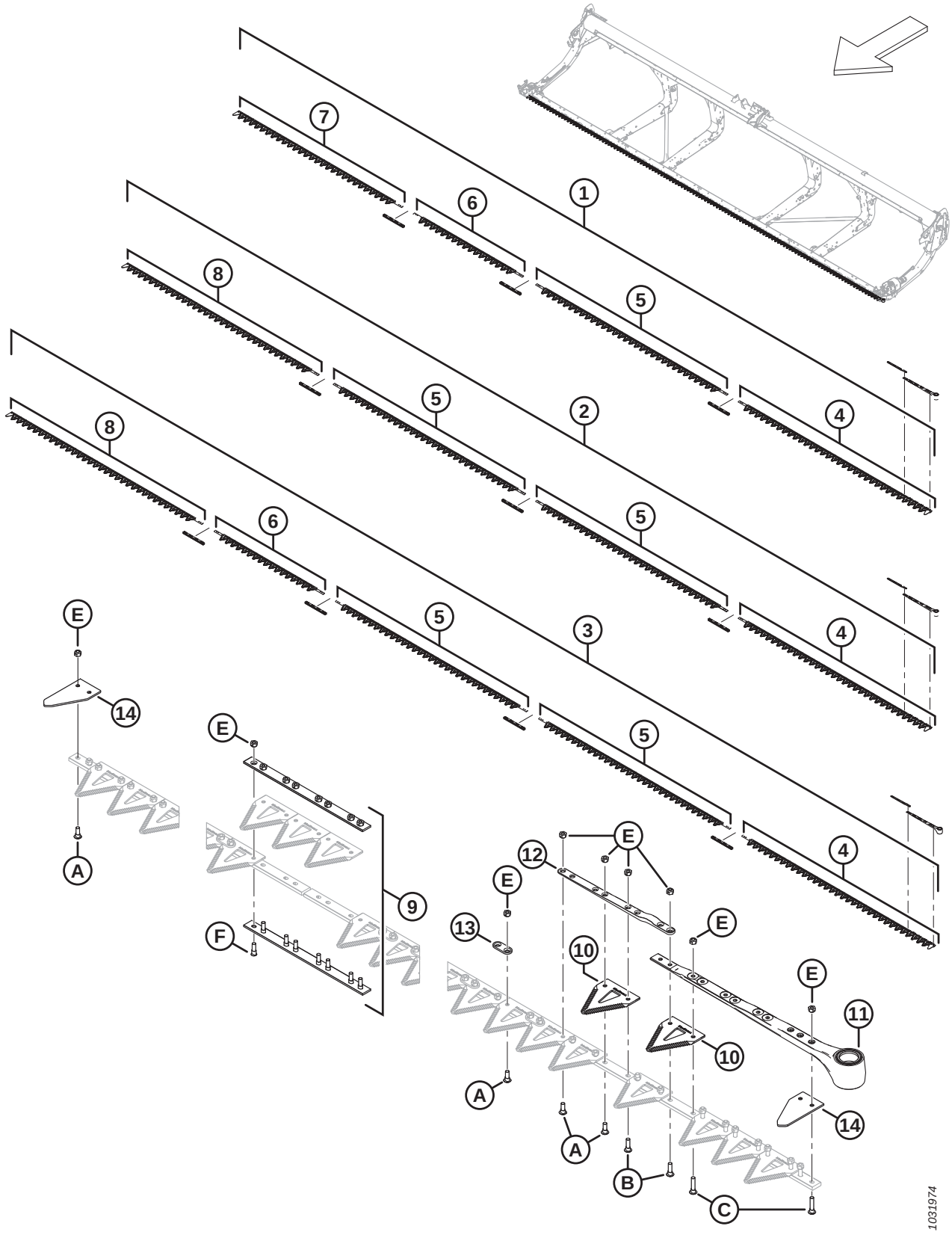

Ref	Part Number	Description	Qty	Serial Number
1	286598	KIT – KNIFE 30 FT SK COARSE [107]	1	
	286610	KIT – KNIFE 30 FT SK FINE [108]	OPT	
	286780	KIT – KNIFE 30 FT SK ULTRA COARSE [109]	OPT	
2	286599	KIT – KNIFE 35 FT SK COARSE [110]	1	
	286611	KIT – KNIFE 35 FT SK FINE [111]	OPT	
	286781	KIT – KNIFE 35 FT SK ULTRA COARSE [112]	OPT	
3	286600	KIT – KNIFE 40 FT SK COARSE [113]	1	
	286612	KIT – KNIFE 40 FT SK FINE [114]	OPT	
	286782	KIT – KNIFE 40 FT SK ULTRA COARSE [115]	OPT	
4	286562	KNIFE – HEAD SEGMENT LH COARSE 2676 MM	1	
	286579	KNIFE – HEAD SEGMENT LH FINE 2676 MM	OPT	
	286758	KNIFE – HEAD SEGMENT LH ULTRA COARSE 2676 MM	OPT	
5	286564	KNIFE – CENTER SEGMENT COARSE 2663 MM [116]		
	286581	KNIFE – CENTER SEGMENT FINE 2663 MM [117]	OPT	
	286760	KNIFE – CENTER SEGMENT ULTRA COARSE 2663 MM [117]	OPT	

107. The kit includes one 25-pack of ClearCut™ coarse sections (MD #286461), three knife splice kits (MD #286493), one LH coarse knife head segment (MD #286562), one center coarse knife segment (MD #286564), one center coarse knife segment (MD #286565), and one tail coarse knife segment (MD #286566).
108. The kit includes one 25-pack of ClearCut™ fine sections (MD #286462), three knife splice kits (MD #286493), one LH fine knife head segment (MD #286579), one center fine knife segment (MD #286581), one center fine knife segment (MD #286582), and one tail fine knife segment (MD #286583).
109. The kit includes one 25-pack of ClearCut™ ultra coarse sections (MD #286627), three knife splice kits (MD #286493), one LH ultra coarse knife head segment (MD #286758), one center ultra coarse knife segment (MD #286760), one center ultra coarse knife segment (MD #286761), and one tail ultra coarse knife segment (MD #286763).
110. The kit includes one 25-pack of ClearCut™ coarse sections (MD #286461), three knife splice kits (MD #286493), one LH coarse knife head segment (MD #286562), two center coarse knife segments (MD #286564), and one tail coarse knife segment (MD #286567).
111. The kit includes one 25-pack of ClearCut™ fine sections (MD #286462), three knife splice kits (MD #286493), one LH fine knife head segment (MD #286579), two center fine knife segments (MD #286581), and one tail fine knife segment (MD #286584).
112. The kit includes one 25-pack of ClearCut™ ultra coarse sections (MD #286627), three knife splice kits (MD #286493), one LH ultra coarse knife head segment (MD #286758), two center ultra coarse knife segments (MD #286760), and one tail ultra coarse knife segment (MD #286764).
113. The kit includes one 25-pack of ClearCut™ coarse sections (MD #286461), four knife splice kits (MD #286493), one LH coarse knife head segment (MD #286562), two center coarse knife segments (MD #286564), one center coarse knife segment (MD #286565), and one tail coarse knife segment (MD #286567).
114. The kit includes one 25-pack of ClearCut™ fine sections (MD #286462), four knife splice kits (MD #286493), one LH fine knife head segment (MD #286579), two center fine knife segments (MD #286581), one center fine knife segment (MD #286582), and one tail fine knife segment (MD #286584).
115. The kit includes one 25-pack of ClearCut™ ultra coarse sections (MD #286627), four knife splice kits (MD #286493), one LH ultra coarse knife head segment (MD #286758), two center ultra coarse knife segments (MD #286760), one center ultra coarse knife segment (MD #286761), and one tail ultra coarse knife segment (MD #286764).
116. Quantities (individual segments: FD230 = 1, FD235 = 2, and FD240 = 2.
117. Quantities (individual segments: FD230 = 1, FD235 = 2, and FD240 = 2.

KNIVES – SINGLE-KNIFE HEADERS (FD230, FD235, AND FD240)

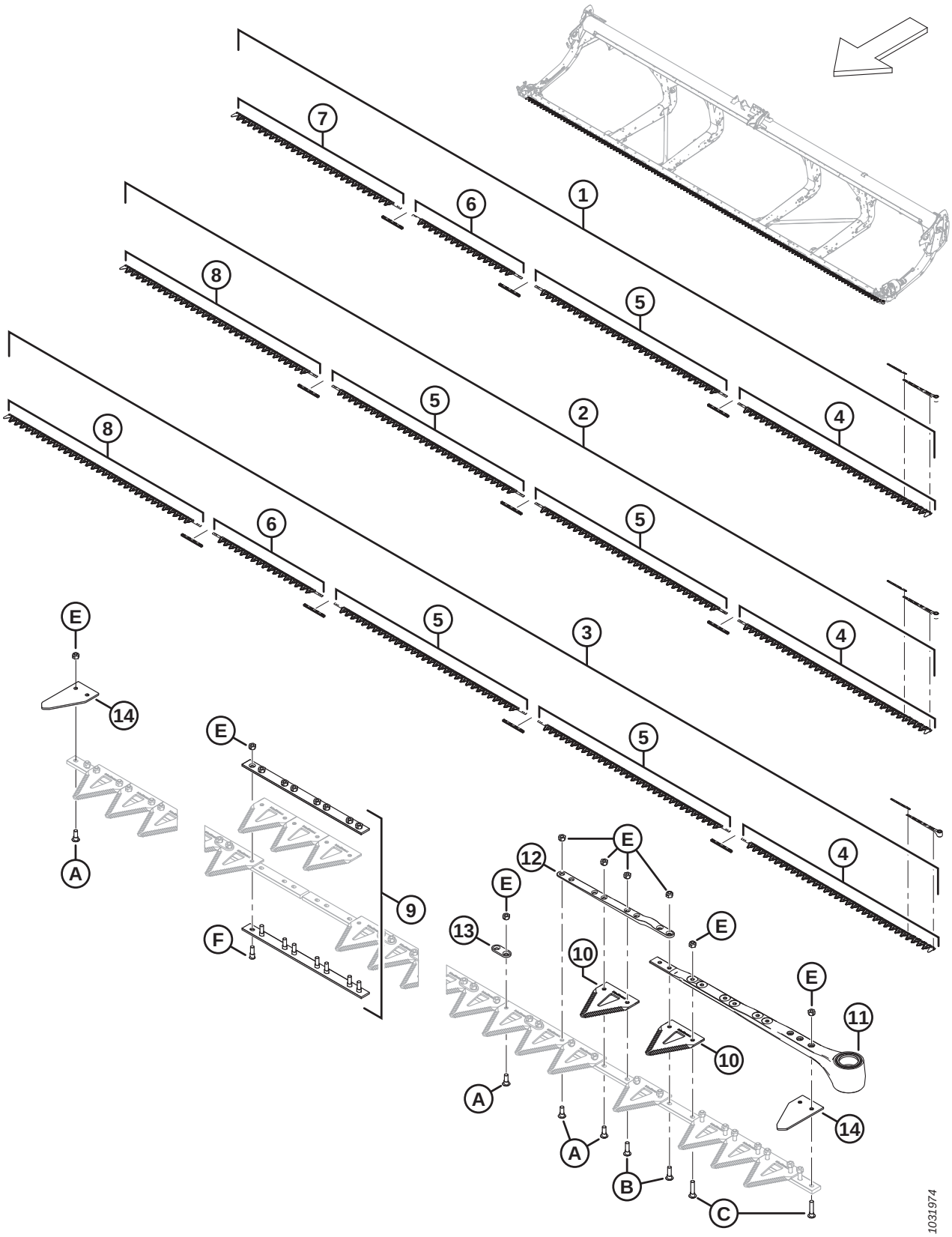

Ref	Part Number	Description	Qty	Serial Number
6	286565	KNIFE – CENTER SEGMENT COARSE 1520 MM [118]		
	286582	KNIFE – CENTER SEGMENT FINE 1520 MM [119]	OPT	
	286761	KNIFE – CENTER SEGMENT ULTRA COARSE 1520 MM [119]	OPT	
7	286566	KNIFE – TAIL SEGMENT SK COARSE 2295 MM [120]		
	286583	KNIFE – TAIL SEGMENT SK FINE 2295 MM [121]	OPT	
	286763	KNIFE – TAIL SEGMENT SK ULTRA COARSE 2295 MM [121]	OPT	
8	286567	KNIFE – TAIL SEGMENT SK COARSE 2676 MM [122]		
	286584	KNIFE – TAIL SEGMENT SK FINE 2676 MM [123]	OPT	
	286764	KNIFE – TAIL SEGMENT SK ULTRA COARSE 2676 MM [123]	OPT	
9	286493	KIT – KNIFE SPLICE [124]		
10	286461	SECTION – CLEARCUT COARSE (25 PACK) [125]		
	286462	SECTION – CLEARCUT FINE (25 PACK) [126]	OPT	
	286627	SECTION – CLEARCUT ULTRA COARSE (25 PACK) [126]	OPT	
11	226941	KNIFE HEAD ASSEMBLY	1	
	115670	O-RING – 1.78 X 34.64	1	
	113937	DISC	1	
	113222	SEAL KIT	1	
	100500	BEARING – NEEDLE	1	
12	286440	BAR – FORGED	1	
13	286481	BAR – REINFORCEMENT (25 PACK)		
14	226983	SECTION – END	2	
A	286475	SCREW – M6 X 18 MM, C/W NUT (50 PACK)		
B	286476	SCREW – M6 X 22 MM, C/W NUT (25 PACK)		
C	286477	SCREW – M6 X 29 MM, C/W NUT (25 PACK)		
D	286478	SCREW – CSK M6 X 14 MM, C/W NUT (25 PACK)		
E	286479	NUT – CTR LOC CSK M6 X 1 (50 PACK)		
F	286621	SCREW – CSK M6 X 22 MM, C/W NUT (25 PACK)		

118. Quantities (individual segments: FD230 = 1, FD235 = 0, and FD240 = 1.
119. Quantities (individual segments: FD230 = 1, FD235 = 0, and FD240 = 1.
120. Quantities (individual segments): FD230 = 1, FD235 = 0, and FD240 = 0.
121. Quantities (individual segments): FD230 = 1, FD235 = 0, and FD240 = 0.
122. Quantities (individual segments): FD230 = 0, FD235 = 1, and FD240 = 1.
123. Quantities (individual segments): FD230 = 0, FD235 = 1, and FD240 = 1.
124. Quantities: FD230 = 3, FD235 = 3, and FD240 = 4.
125. Quantities (individual sections): FD230 = 119, FD235 = 139, and FD240 = 159.
126. Quantities (individual sections): FD230 = 119, FD235 = 139, and FD240 = 159.

34 Knives – Double-Knife Headers (FD235 and FD240)

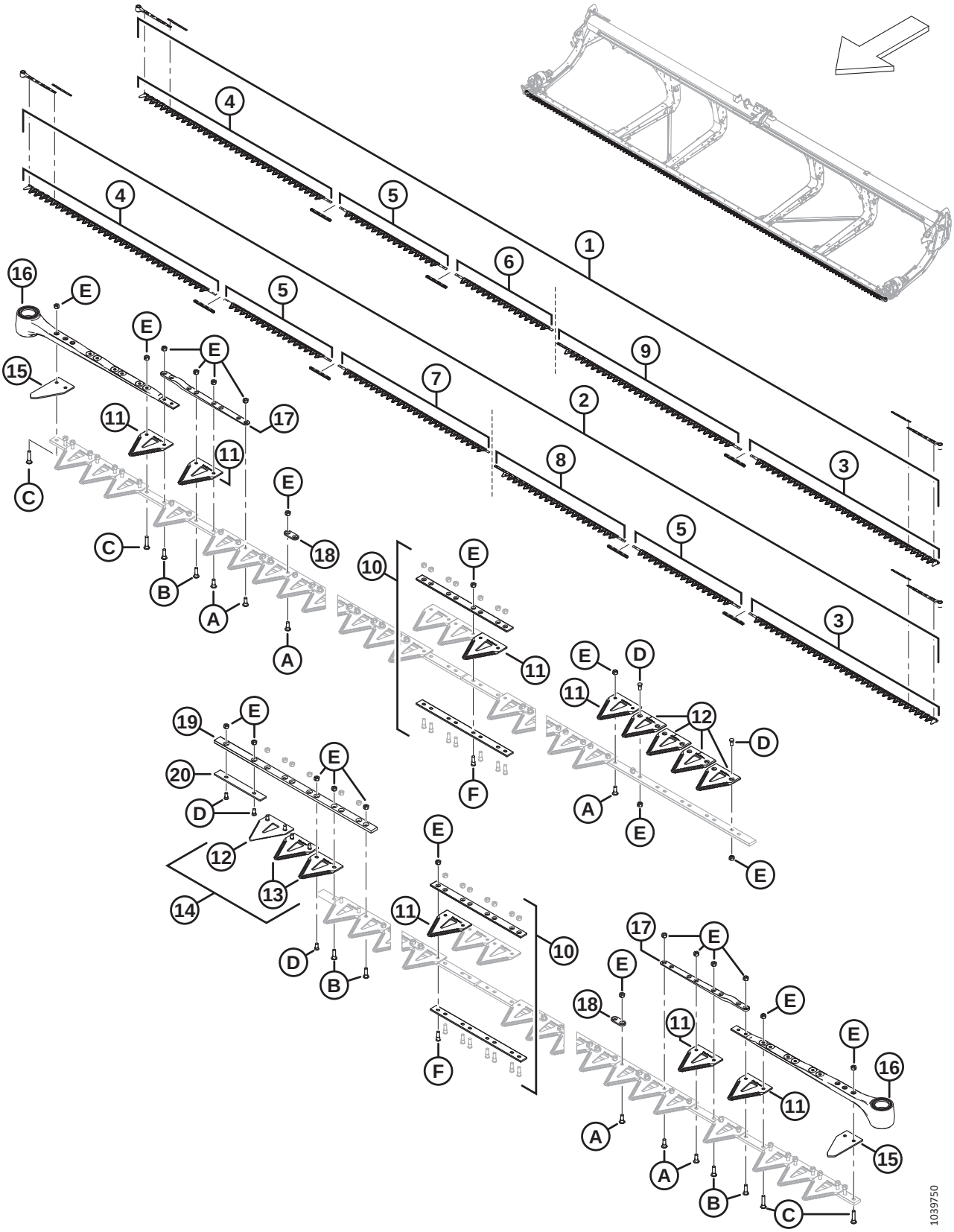

Ref	Part Number	Description	Qty	Serial Number
1	286886	KIT – KNIFE 35 FT DK COARSE [127]	1	
	286616	KIT – KNIFE 35 FT DK FINE [128]	OPT	
	286787	KIT – KNIFE 35 FT DK ULTRA COARSE [129]	OPT	
2	286887	KIT – KNIFE 40 FT DK COARSE [130]	1	
	286617	KIT – KNIFE 40 FT DK FINE [131]	OPT	
	286788	KIT – KNIFE 40 FT DK ULTRA COARSE [132]	OPT	
3	286562	KNIFE – HEAD SEGMENT LH COARSE 2676 MM	1	
	286579	KNIFE – HEAD SEGMENT LH FINE 2676 MM	OPT	
	286758	KNIFE – HEAD SEGMENT LH ULTRA COARSE 2676 MM	OPT	
4	286563	KNIFE – HEAD SEGMENT RH COARSE 2676 MM	1	
	286580	KNIFE – HEAD SEGMENT RH FINE 2676 MM	OPT	
	286759	KNIFE – HEAD SEGMENT RH ULTRA COARSE 2676 MM	OPT	
5	286565	KNIFE – CENTER SEGMENT COARSE 1520 MM [133]		
	286582	KNIFE – CENTER SEGMENT FINE 1520 MM [133]	OPT	
	286761	KNIFE – CENTER SEGMENT ULTRA COARSE 1520 MM [133]	OPT	
6	286865	KNIFE – TAIL SEGMENT RH COARSE 1385 MM [134]		
	286870	KNIFE – TAIL SEGMENT RH FINE 1385 MM [134]	OPT	
	286875	KNIFE – TAIL SEGMENT RH ULTRA COARSE 1385 MM [134]	OPT	

127. The kit includes one 25-pack of ClearCut™ coarse sections (MD #286461), three knife splice kits (MD #286493), one LH coarse knife head segment (MD #286562), one RH coarse knife head segment (MD #286563), one center coarse knife segment (MD #286565), one RH tail coarse knife segment (MD #286865), and one LH tail coarse knife segment (MD #286575).
128. The kit includes one 25-pack of ClearCut™ fine sections (MD #286462), three knife splice kits (MD #286493), one LH fine knife head segment (MD #286579), one RH fine knife head segment (MD #286580), one center fine knife segment (MD #286582), one RH tail fine knife segment (MD #286870), and one LH tail fine knife segment (MD #286592).
129. The kit includes one 25-pack of ClearCut™ ultra coarse sections (MD #286627), three knife splice kits (MD #286493), one LH ultra coarse knife head segment (MD #286758), one RH ultra coarse knife head segment (MD #286759), one center ultra coarse knife segment (MD #286761), one RH tail ultra coarse knife segment (MD #286875), and one LH tail ultra coarse knife segment (MD #286768).
130. The kit includes one 25-pack of ClearCut™ coarse sections (MD #286461), four knife splice kits (MD #286493), one LH coarse knife head segment (MD #286562), one RH coarse knife head segment (MD #286563), two center coarse knife segments (MD #286565), one RH tail coarse knife segment (MD #286866), and one LH tail coarse knife segment (MD #286574).
131. The kit includes one 25-pack of ClearCut™ coarse sections (MD #286462), four knife splice kits (MD #286493), one LH coarse knife head segment (MD #286579), one RH coarse knife head segment (MD #286580), two center coarse knife segments (MD #286582), one RH tail coarse knife segment (MD #286871), and one LH tail coarse knife segment (MD #286591).
132. The kit includes one 25-pack of ClearCut™ coarse sections (MD #286627), four knife splice kits (MD #286493), one LH coarse knife head segment (MD #286758), one RH coarse knife head segment (MD #286759), two center coarse knife segments (MD #286761), one RH tail coarse knife segment (MD #286876), and one LH tail coarse knife segment (MD #286767).
133. Quantities (individual segments): FD235 = 1 and FD240 = 2.
134. Quantities (individual segments): FD235 = 1 and FD240 = 0.

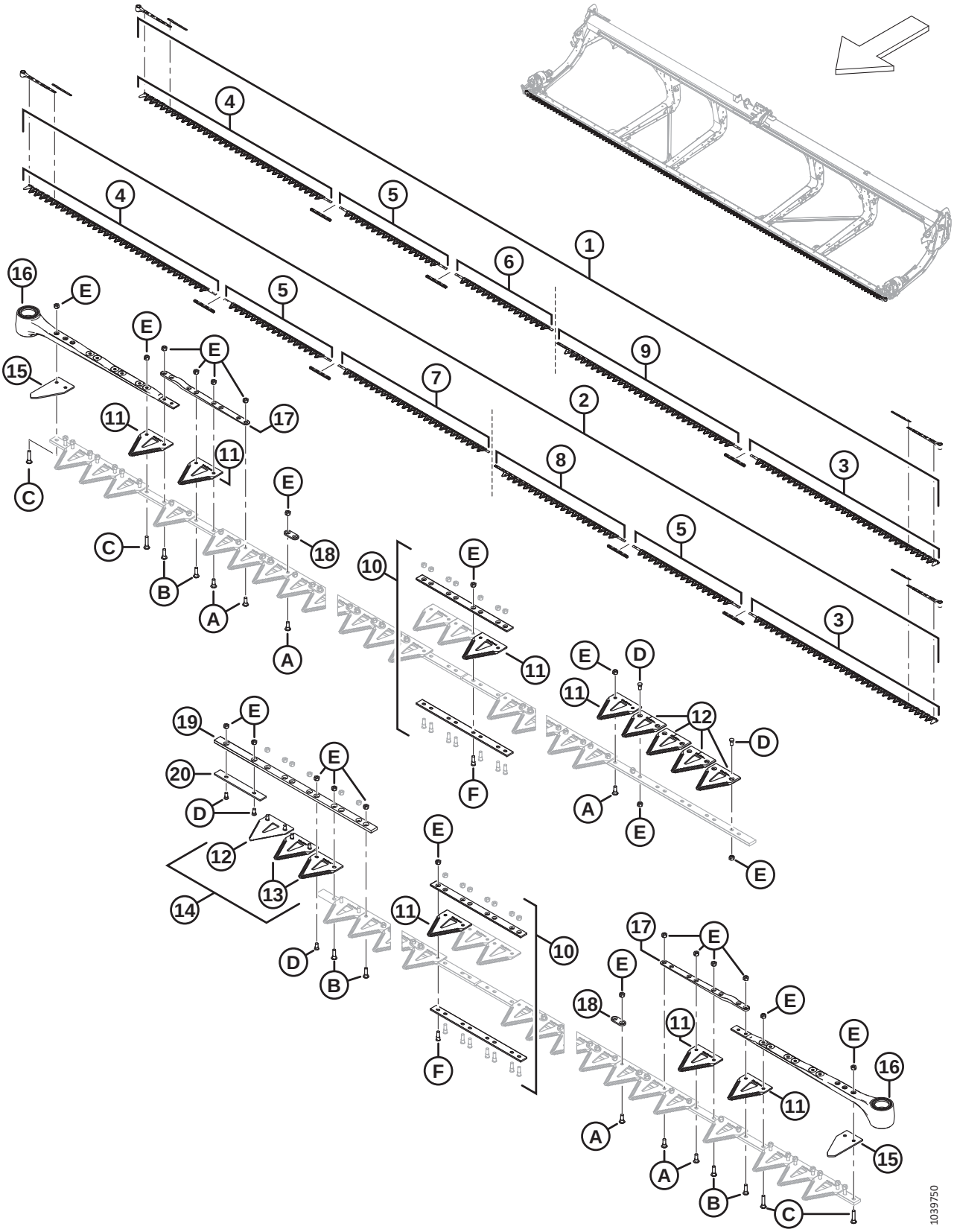
1039750

Ref	Part Number	Description	Qty	Serial Number
7	286866	KNIFE – TAIL SEGMENT RH COARSE 2147 MM [135]		
	286871	KNIFE – TAIL SEGMENT RH FINE 2147 MM [135]	OPT	
	286876	KNIFE – TAIL SEGMENT RH ULTRA COARSE 2147 MM [135]	OPT	
8	286574	KNIFE – TAIL SEGMENT LH COARSE 1856 MM [135]		
	286591	KNIFE – TAIL SEGMENT LH FINE 1856 MM [135]	OPT	
	286767	KNIFE – TAIL SEGMENT LH ULTRA COARSE 1856 MM [135]	OPT	
9	286575	KNIFE – TAIL SEGMENT LH COARSE 2618 MM [134]		
	286592	KNIFE – TAIL SEGMENT LH FINE 2618 MM [134]	OPT	
	286768	KNIFE – TAIL SEGMENT LH ULTRA COARSE 2618 MM [134]	OPT	
10	286493	KIT – KNIFE SPLICE [136]		
11	286461	SECTION – CLEARCUT COARSE (25 PACK) [137]		
	286462	SECTION – CLEARCUT FINE (25 PACK) [137]	OPT	
	286627	SECTION – CLEARCUT ULTRA COARSE (25 PACK) [137]	OPT	
12	286463	SECTION – CLEARCUT COARSE TOP CSK (10 PACK) [138]		
	286465	SECTION – CLEARCUT FINE TOP CSK (10 PACK) [138]	OPT	
	286628	SECTION – CLEARCUT ULTRA COARSE TOP CSK (10 PACK) [138]	OPT	
13	286464	SECTION – CLEARCUT COARSE BOTTOM CSK (10 PACK) [139]		
	286466	SECTION – CLEARCUT FINE BOTTOM CSK (10 PACK) [139]	OPT	
	286629	SECTION – CLEARCUT ULTRA COARSE BOTTOM CSK (10 PACK) [139]	OPT	
14	286861	KIT – CLEARCUT COARSE CENTER [140]		
	286862	KIT – CLEARCUT FINE CENTER [141]	OPT	
	286863	KIT – CLEARCUT ULTRA COARSE CENTER [142]	OPT	
15	226983	SECTION – END	2	
16	226941	KNIFE HEAD ASSEMBLY	2	
	115670	O-RING – 1.78 X 34.64		
	113937	DISC		
	113222	SEAL KIT		
	100500	BEARING – NEEDLE		

135. Quantities (individual segments): FD235 = 0 and FD240 = 1.
136. The kit includes bottom splice bar (NSS), top splice bar (NSS), eight screws (MD #286314), and eight nuts (MD #226259). Quantities: FD235 = 3 and FD240 = 4.
137. Quantities (individual sections): FD235 = 139 and FD240 = 159.
138. Quantities (individual sections): FD235 = 5 and FD240 = 5.
139. Quantities (individual sections): FD235 = 2 and FD240 = 2.
140. The kit includes five ClearCut™ coarse top CSK sections (NSS), two ClearCut™ coarse bottom CSK sections (NSS), and hardware.
141. The kit includes five ClearCut™ fine top CSK sections (NSS), two ClearCut™ fine bottom CSK sections (NSS), and hardware.
142. The kit includes five ClearCut™ ultra coarse top CSK sections (NSS), two ClearCut™ ultra coarse bottom CSK sections (NSS), and hardware.

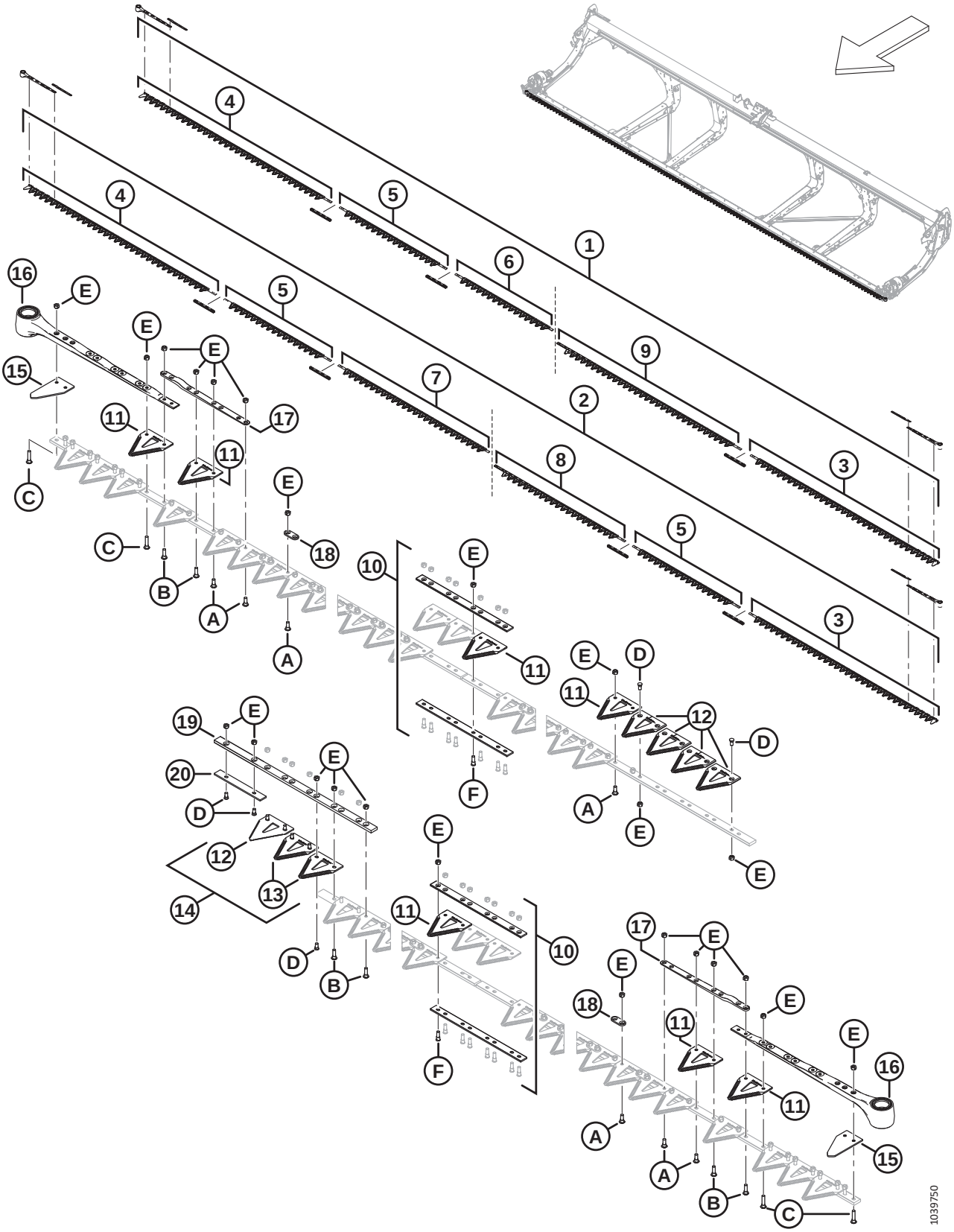
1039750

Ref	Part Number	Description	Qty	Serial Number
17	286440	BAR – FORGED	1	
18	286481	BAR – REINFORCEMENT (25 PACK) [143]		
19	286362	BAR – KNIFE OVERLAP GUIDE	1	
20	286363	BAR – WEAR	1	
A	286475	SCREW – M6 X 18 MM, C/W NUT (50 PACK)		
B	286476	SCREW – M6 X 22 MM, C/W NUT (25 PACK)		
C	286477	SCREW – M6 X 29 MM, C/W NUT (25 PACK)		
D	286478	SCREW – CSK M6 X 14 MM, C/W NUT (25 PACK)		
E	286479	NUT – CTR LOC CSK M6 X 1 (50 PACK)		
F	286621	SCREW – CSK M6 X 22 MM, C/W NUT (25 PACK)		

143. Quantities (individual bars): FD235 = 72 and FD240 = 88.

35 Knives – Double-Knife Headers (FD241)

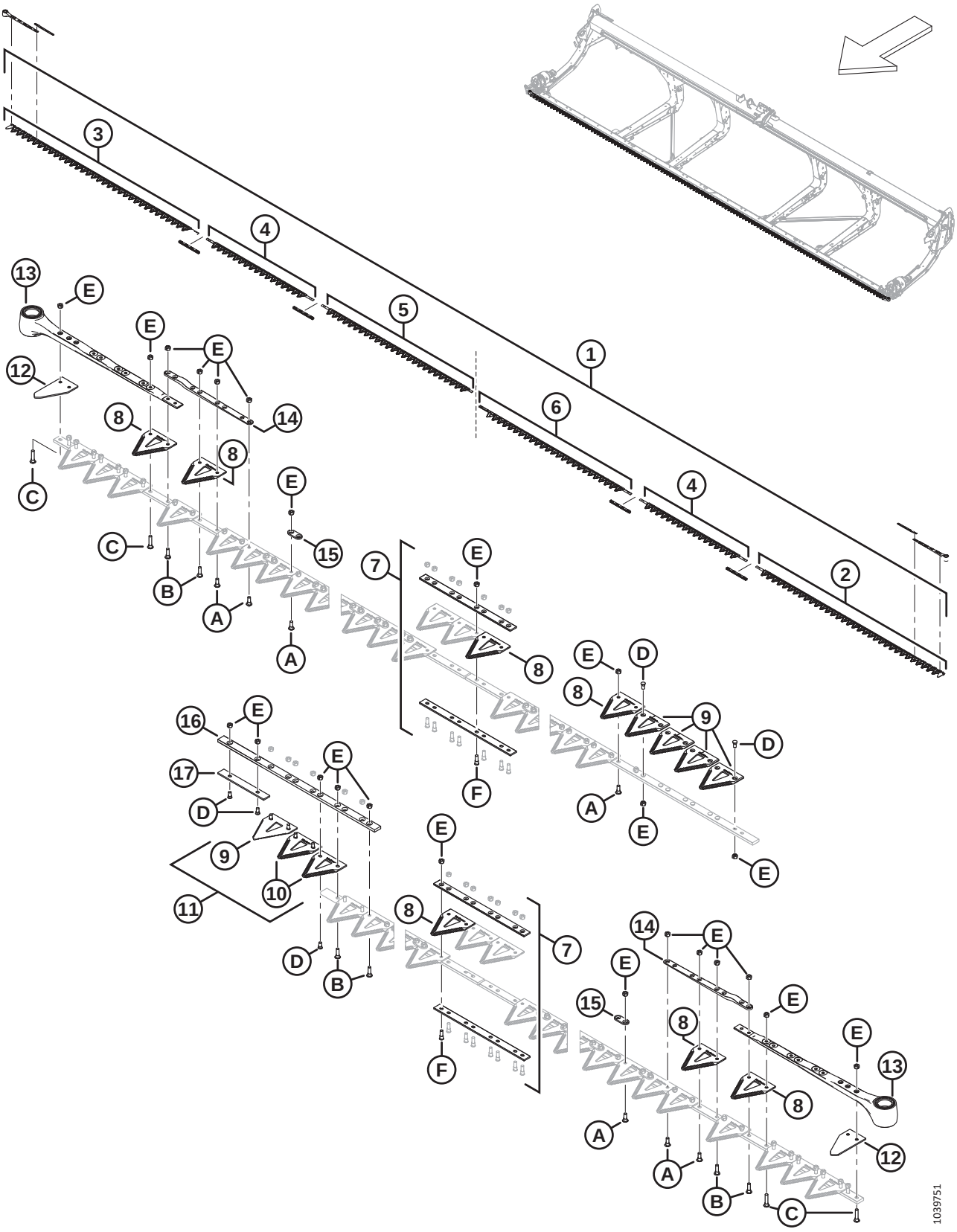

Ref	Part Number	Description	Qty	Serial Number
1	286888	KIT – KNIFE 41 FT DK COARSE [144]	1	
	286618	KIT – KNIFE 41 FT DK FINE [145]	OPT	
	286789	KIT – KNIFE 41 FT DK ULTRA COARSE [146]	OPT	
2	286562	KNIFE – HEAD SEGMENT LH COARSE 2676 MM	1	
	286579	KNIFE – HEAD SEGMENT LH FINE 2676 MM	OPT	
	286758	KNIFE – HEAD SEGMENT LH ULTRA COARSE 2676 MM	OPT	
3	286563	KNIFE – HEAD SEGMENT RH COARSE 2676 MM	1	
	286580	KNIFE – HEAD SEGMENT RH FINE 2676 MM	OPT	
	286759	KNIFE – HEAD SEGMENT RH ULTRA COARSE 2676 MM	OPT	
4	286565	KNIFE – CENTER SEGMENT COARSE 1520 MM	2	
	286582	KNIFE – CENTER SEGMENT FINE 1520 MM	OPT	
	286761	KNIFE – CENTER SEGMENT ULTRA COARSE 1520 MM	OPT	
5	286866	KNIFE – TAIL SEGMENT RH COARSE 2147 MM	1	
	286871	KNIFE – TAIL SEGMENT RH FINE 2147 MM	OPT	
	286876	KNIFE – TAIL SEGMENT RH ULTRA COARSE 2147 MM	OPT	
6	286576	KNIFE – TAIL SEGMENT LH COARSE 2161 MM	1	
	286593	KNIFE – TAIL SEGMENT LH FINE 2161 MM	OPT	
	286769	KNIFE – TAIL SEGMENT LH ULTRA COARSE 2161 MM	OPT	
7	286493	KIT – KNIFE SPLICE [147]	4	
8	286461	SECTION – CLEARCUT COARSE (25 PACK) [148]		
	286462	SECTION – CLEARCUT FINE (25 PACK) [148]	OPT	
	286627	SECTION – CLEARCUT ULTRA COARSE (25 PACK) [148]	OPT	
9	286463	SECTION – CLEARCUT COARSE TOP CSK (10 PACK) [149]		
	286465	SECTION – CLEARCUT FINE TOP CSK (10 PACK) [149]	OPT	
	286628	SECTION – CLEARCUT ULTRA COARSE TOP CSK (10 PACK) [149]	OPT	

144. The kit includes one 25-pack of ClearCut™ coarse sections (MD #286461), four knife splice kits (MD #286493), one LH coarse knife head segment (MD #286562), one RH coarse knife head segment (MD #286563), two center coarse knife segments (MD #286565), one RH tail coarse knife segment (MD #286866), and one LH tail coarse knife segment (MD #286576).
145. The kit includes one 25-pack of ClearCut™ fine sections (MD #286462), four knife splice kits (MD #286493), one LH fine knife head segment (MD #286579), one RH fine knife head segment (MD #286580), two center fine knife segments (MD #286582), one RH tail fine knife segment (MD #286871), and one LH tail fine knife segment (MD #286593).
146. The kit includes one 25-pack of ClearCut™ ultra coarse sections (MD #286627), four knife splice kits (MD #286493), one LH ultra coarse knife head segment (MD #286758), one RH ultra coarse knife head segment (MD #286759), two center ultra coarse knife segments (MD #286761), one RH tail ultra coarse knife segment (MD #286876), and one LH tail ultra coarse knife segment (MD #286769).
147. The kit includes bottom splice bar (NSS), top splice bar (NSS), eight screws (MD #286314), and eight nuts (MD #226259).
148. Quantities (individual sections): 163.
149. Quantities (individual sections): 5.

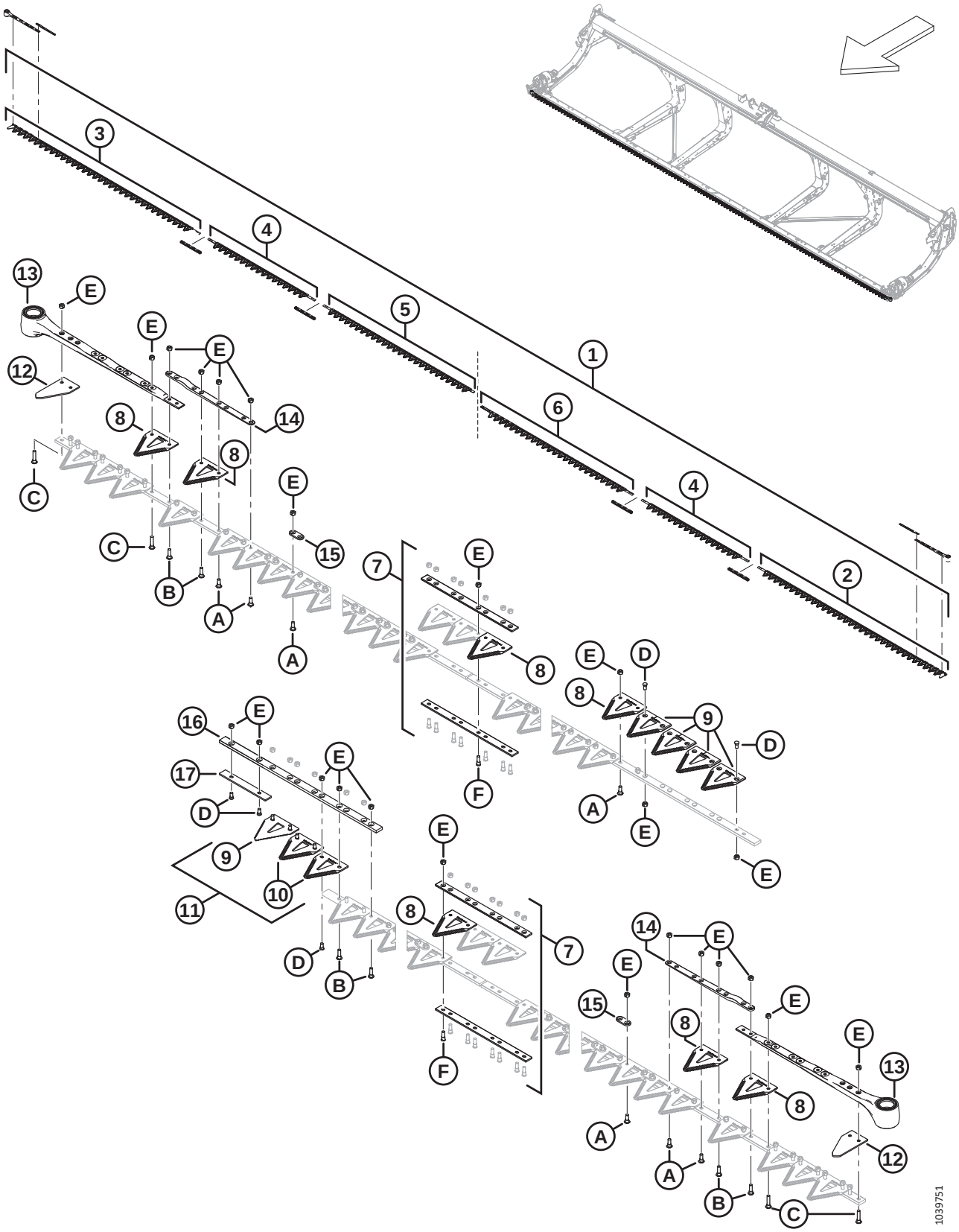
1039751

Ref	Part Number	Description	Qty	Serial Number
10	286464	SECTION – CLEARCUT COARSE BOTTOM CSK (10 PACK) [150]		
	286466	SECTION – CLEARCUT FINE BOTTOM CSK (10 PACK) [150]	OPT	
	286629	SECTION – CLEARCUT ULTRA COARSE BOTTOM CSK (10 PACK) [150]	OPT	
11	286861	KIT – CLEARCUT COARSE CENTER [151]	A/R	
	286862	KIT – CLEARCUT FINE CENTER [152]	OPT	
	286863	KIT – CLEARCUT ULTRA COARSE CENTER [153]	OPT	
12	226983	SECTION – END	2	
13	226941	KNIFE HEAD ASSEMBLY	2	
	115670	O-RING – 1.78 X 34.64		
	113937	DISC		
	113222	SEAL KIT		
	100500	BEARING – NEEDLE		
14	286440	BAR – FORGED	2	
15	286481	BAR – REINFORCEMENT (25 PACK) [154]		
16	286362	BAR – KNIFE OVERLAP GUIDE	1	
17	286363	BAR – WEAR	1	
A	286475	SCREW – M6 X 18 MM, C/W NUT (50 PACK)		
B	286476	SCREW – M6 X 22 MM, C/W NUT (25 PACK)		
C	286477	SCREW – M6 X 29 MM, C/W NUT (25 PACK)		
D	286478	SCREW – CSK M6 X 14 MM, C/W NUT (25 PACK)		
E	286479	NUT – CTR LOC CSK M6 X 1 (50 PACK)		
F	286621	SCREW – CSK M6 X 22 MM, C/W NUT (25 PACK)		

150. Quantities (individual sections): 2.
151. The kit includes five ClearCut™ coarse top CSK sections (NSS), two ClearCut™ coarse bottom CSK sections (NSS), and hardware.
152. The kit includes five ClearCut™ fine top CSK sections (NSS), two ClearCut™ fine bottom CSK sections (NSS), and hardware.
153. The kit includes five ClearCut™ ultra coarse top CSK sections (NSS), two ClearCut™ ultra coarse bottom CSK sections (NSS), and hardware.
154. Quantities (individual bars): 88.

36 Knives – Double-Knife Headers (FD245)

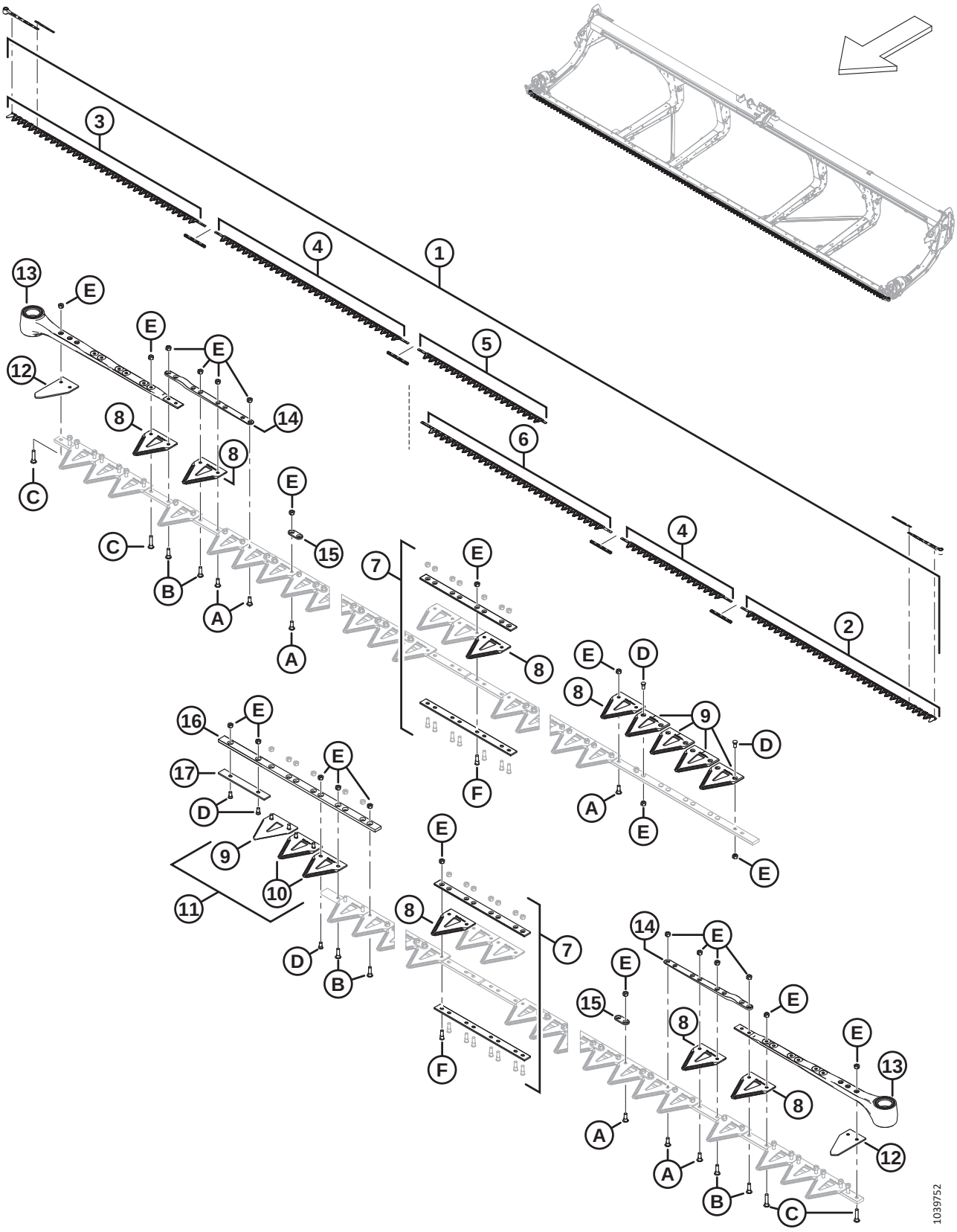

Ref	Part Number	Description	Qty	Serial Number
1	286889	KIT – KNIFE 45 FT DK COARSE [155]	1	
	286619	KIT – KNIFE 45 FT DK FINE [156]	OPT	
	286790	KIT – KNIFE 45 FT DK ULTRA COARSE [157]	OPT	
2	286562	KNIFE – HEAD SEGMENT LH COARSE 2676 MM	1	
	286579	KNIFE – HEAD SEGMENT LH FINE 2676 MM	OPT	
	286758	KNIFE – HEAD SEGMENT LH ULTRA COARSE 2676 MM	OPT	
3	286563	KNIFE – HEAD SEGMENT RH COARSE 2676 MM	1	
	286580	KNIFE – HEAD SEGMENT RH FINE 2676 MM	OPT	
	286759	KNIFE – HEAD SEGMENT RH ULTRA COARSE 2676 MM	OPT	
4	286564	KNIFE – CENTER SEGMENT COARSE 2663 MM	1	
	286565	KNIFE – CENTER SEGMENT COARSE 1520 MM	1	
	286581	KNIFE – CENTER SEGMENT FINE 2663 MM	OPT	
	286582	KNIFE – CENTER SEGMENT FINE 1520 MM	OPT	
	286760	KNIFE – CENTER SEGMENT ULTRA COARSE 2663 MM	OPT	
	286581	KNIFE – CENTER SEGMENT ULTRA COARSE 1520 MM	OPT	
5	286867	KNIFE – TAIL SEGMENT RH COARSE 1766 MM	1	
	286872	KNIFE – TAIL SEGMENT RH FINE 1766 MM	OPT	
	286877	KNIFE – TAIL SEGMENT RH ULTRA COARSE 1766 MM	OPT	
6	286575	KNIFE – TAIL SEGMENT LH COARSE 2618 MM	1	
	286592	KNIFE – TAIL SEGMENT LH FINE 2618 MM	OPT	
	286768	KNIFE – TAIL SEGMENT LH ULTRA COARSE 2618 MM	OPT	
7	286493	KIT – KNIFE SPLICE [158]	4	
8	286461	SECTION – CLEARCUT COARSE (25 PACK) [159]		
	286462	SECTION – CLEARCUT FINE (25 PACK) [160]	OPT	
	286627	SECTION – CLEARCUT ULTRA COARSE (25 PACK) [160]	OPT	

155. The kit includes one 25-pack of ClearCut™ coarse sections (MD #286461), four knife splice kits (MD #286493), one LH coarse knife head segment (MD #286562), one RH coarse knife head segment (MD #286563), one center coarse knife segment (2663 mm) (MD #286564), one center coarse knife segment (1520 mm) (MD #286565), one RH tail coarse knife segment (MD #286867), and one LH tail coarse knife segment (MD #286575).
156. The kit includes one 25-pack of ClearCut™ fine sections (MD #286462), four knife splice kits (MD #286493), one LH fine knife head segment (MD #286579), one RH fine knife head segment (MD #286580), one center fine knife segment (2663 mm) (MD #286581), one center fine knife segment (1520 mm) (MD #286582), one RH tail fine knife segment (MD #286872), and one LH tail fine knife segment (MD #286592).
157. The kit includes one 25-pack of ClearCut™ ultra coarse sections (MD #286627), four knife splice kits (MD #286493), one LH ultra coarse knife head segment (MD #286758), one RH ultra coarse knife head segment (MD #286759), one center ultra coarse knife segment (2663 mm) (MD #286760), one center ultra coarse knife segment (1520 mm) (MD #286761), one RH tail ultra coarse knife segment (MD #286877), and one LH tail ultra coarse knife segment (MD #286768).
158. The kit includes bottom splice bar (NSS), top splice bar (NSS), eight screws (MD #286314), and eight nuts (MD #226259).
159. Quantities (individual sections): 179.
160. Quantities (individual sections): 179.

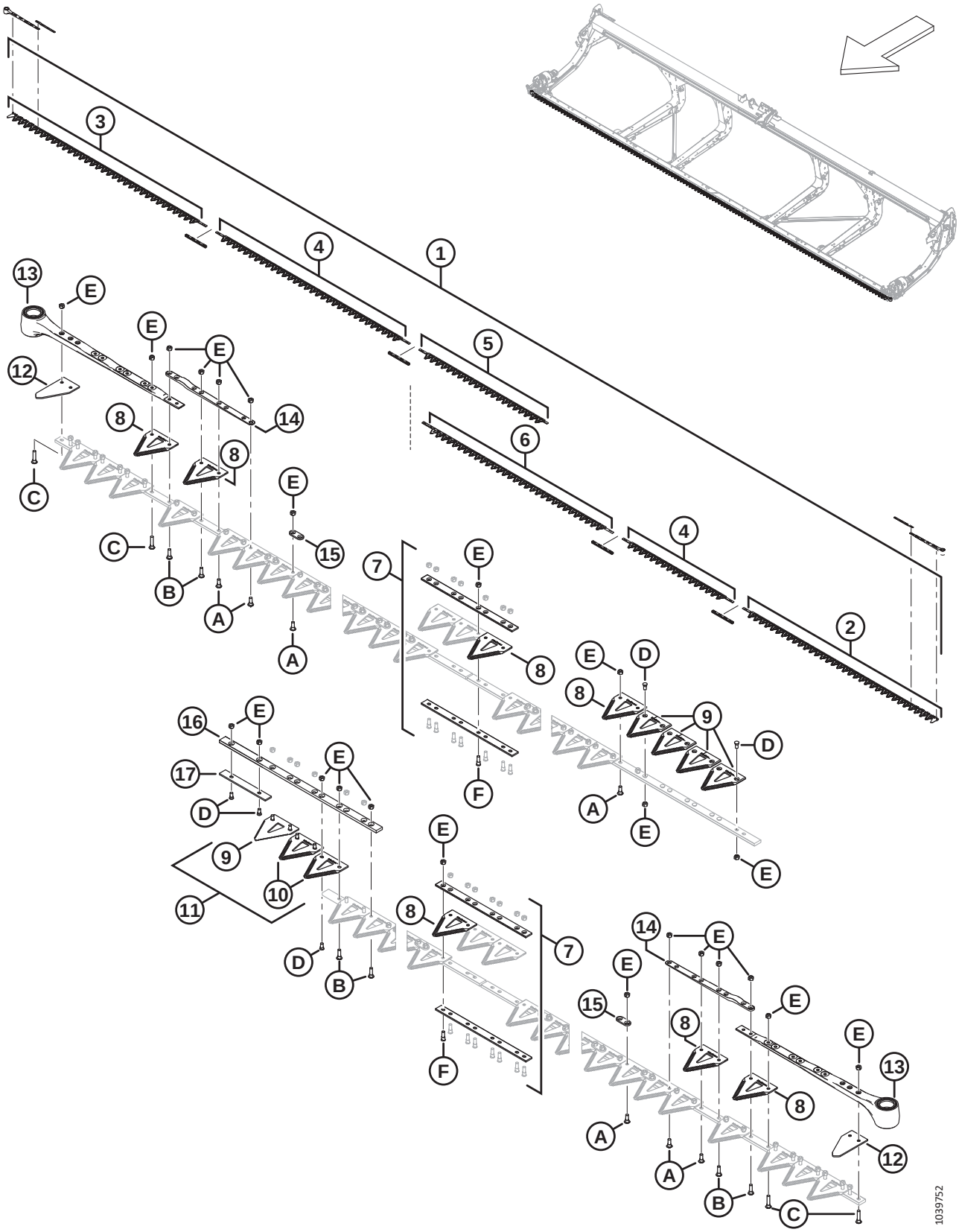
1039752

Ref	Part Number	Description	Qty	Serial Number
9	286463	SECTION – CLEARCUT COARSE TOP CSK (10 PACK) [161]		
	286465	SECTION – CLEARCUT FINE TOP CSK (10 PACK) [162]	OPT	
	286628	SECTION – CLEARCUT ULTRA COARSE TOP CSK (10 PACK) [162]	OPT	
10	286464	SECTION – CLEARCUT COARSE BOTTOM CSK (10 PACK) [163]		
	286466	SECTION – CLEARCUT FINE BOTTOM CSK (10 PACK) [164]	OPT	
	286629	SECTION – CLEARCUT ULTRA COARSE BOTTOM CSK (10 PACK) [164]	OPT	
11	286861	KIT – CLEARCUT COARSE CENTER [165]		
	286862	KIT – CLEARCUT FINE CENTER [166]	OPT	
	286863	KIT – CLEARCUT ULTRA COARSE CENTER [167]	OPT	
12	226983	SECTION – END	2	
13	226941	KNIFE HEAD ASSEMBLY	2	
	115670	O-RING – 1.78 X 34.64		
	113937	DISC		
	113222	SEAL KIT		
	100500	BEARING – NEEDLE		
14	286440	BAR – FORGED	2	
15	286481	BAR – REINFORCEMENT (25 PACK) [168]		
16	286362	BAR – KNIFE OVERLAP GUIDE	1	
17	286363	BAR – WEAR	1	
A	286475	SCREW – M6 X 18 MM, C/W NUT (50 PACK)		
B	286476	SCREW – M6 X 22 MM, C/W NUT (25 PACK)		
C	286477	SCREW – M6 X 29 MM, C/W NUT (25 PACK)		
D	286478	SCREW – CSK M6 X 14 MM, C/W NUT (25 PACK)		
E	286479	NUT – CTR LOC CSK M6 X 1 (50 PACK)		
F	286621	SCREW – CSK M6 X 22 MM, C/W NUT (25 PACK)		

161. Quantities (individual sections): 5.
162. Quantities (individual sections): 5.
163. Quantities (individual sections): 2.
164. Quantities (individual sections): 2.
165. The kit includes five ClearCut™ coarse top CSK sections (NSS), two ClearCut™ coarse bottom CSK sections (NSS), and hardware.
166. The kit includes five ClearCut™ fine top CSK sections (NSS), two ClearCut™ fine bottom CSK sections (NSS), and hardware.
167. The kit includes five ClearCut™ ultra coarse top CSK sections (NSS), two ClearCut™ ultra coarse bottom CSK sections (NSS), and hardware.
168. Quantities (individual bars): 103.

37 Knives – Double-Knife Headers (FD250)

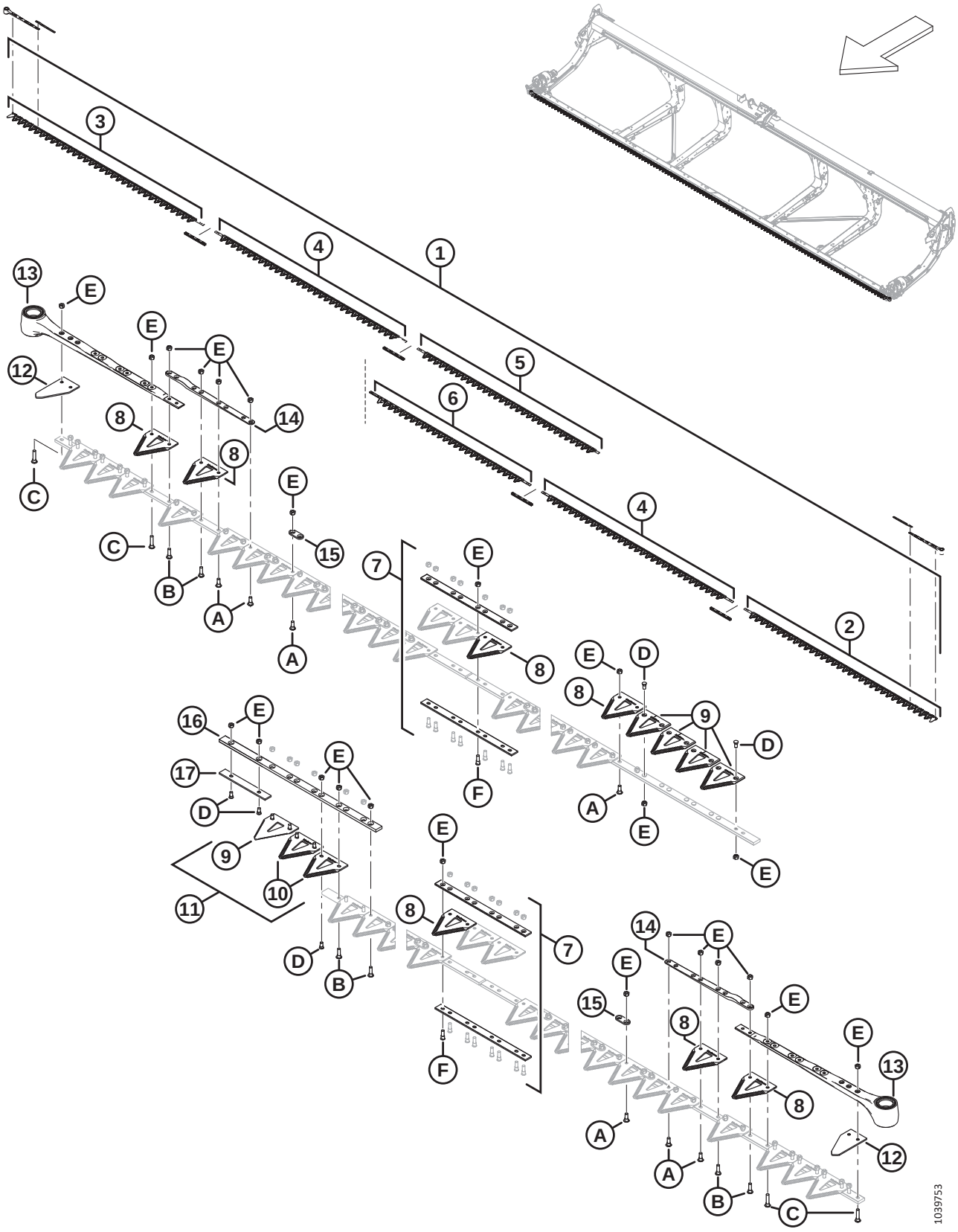

Ref	Part Number	Description	Qty	Serial Number
1	286890	KIT – KNIFE 50 FT DK COARSE [169]	1	
	286620	KIT – KNIFE 50 FT DK FINE [170]	OPT	
	286791	KIT – KNIFE 50 FT DK ULTRA COARSE [171]	OPT	
2	286562	KNIFE – HEAD SEGMENT LH COARSE 2676 MM	1	
	286579	KNIFE – HEAD SEGMENT LH FINE 2676 MM	OPT	
	286758	KNIFE – HEAD SEGMENT LH ULTRA COARSE 2676 MM	OPT	
3	286563	KNIFE – HEAD SEGMENT RH COARSE 2676 MM	1	
	286580	KNIFE – HEAD SEGMENT RH FINE 2676 MM	OPT	
	286759	KNIFE – HEAD SEGMENT RH ULTRA COARSE 2676 MM	OPT	
4	286564	KNIFE – CENTER SEGMENT COARSE 2663 MM	2	
	286581	KNIFE – CENTER SEGMENT FINE 2663 MM	OPT	
	286760	KNIFE – CENTER SEGMENT ULTRA COARSE 2663 MM	OPT	
5	286868	KNIFE – TAIL SEGMENT RH COARSE 2528 MM	1	
	286873	KNIFE – TAIL SEGMENT RH FINE 2528 MM	OPT	
	286878	KNIFE – TAIL SEGMENT RH ULTRA COARSE 2528 MM	OPT	
6	286578	KNIFE – TAIL SEGMENT LH COARSE 2237 MM	1	
	286595	KNIFE – TAIL SEGMENT LH FINE 2237 MM	OPT	
	286770	KNIFE – TAIL SEGMENT LH ULTRA COARSE 2237 MM	OPT	
7	286493	KIT – KNIFE SPLICE [172]	4	
8	286461	SECTION – CLEARCUT COARSE (25 PACK) [173]		
	286462	SECTION – CLEARCUT FINE (25 PACK) [174]	OPT	
	286627	SECTION – CLEARCUT ULTRA COARSE (25 PACK) [174]	OPT	
9	286463	SECTION – CLEARCUT COARSE TOP CSK (10 PACK) [175]		
	286465	SECTION – CLEARCUT FINE TOP CSK (10 PACK) [176]	OPT	
	286628	SECTION – CLEARCUT ULTRA COARSE TOP CSK (10 PACK) [176]	OPT	

169. The kit includes one 25-pack of ClearCut™ coarse sections (MD #286461), four knife splice kits (MD #286493), one LH coarse knife head segment (MD #286562), one RH coarse knife head segment (MD #286563), two center coarse knife segments (MD #286564), one RH tail coarse knife segment (MD #286868), and one LH tail coarse knife segment (MD #286578).
170. The kit includes one 25-pack of ClearCut™ fine sections (MD #286462), four knife splice kits (MD #286493), one LH fine knife head segment (MD #286579), one RH fine knife head segment (MD #286580), two center fine knife segments (MD #286581), one RH tail fine knife segment (MD #286873), and one LH tail fine knife segment (MD #286595).
171. The kit includes one 25-pack of ClearCut™ ultra coarse sections (MD #286627), four knife splice kits (MD #286493), one LH ultra coarse knife head segment (MD #286758), one RH ultra coarse knife head segment (MD #286759), two center ultra coarse knife segments (MD #286760), one RH tail ultra coarse knife segment (MD #286878), and one LH tail ultra coarse knife segment (MD #286770).
172. The kit includes bottom splice bar (NSS), top splice bar (NSS), eight screws (MD #286314), and eight nuts (MD #226259).
173. Quantities (individual sections): 199.
174. Quantities (individual sections): 199.
175. Quantities (individual sections): 5.
176. Quantities (individual sections): 5.

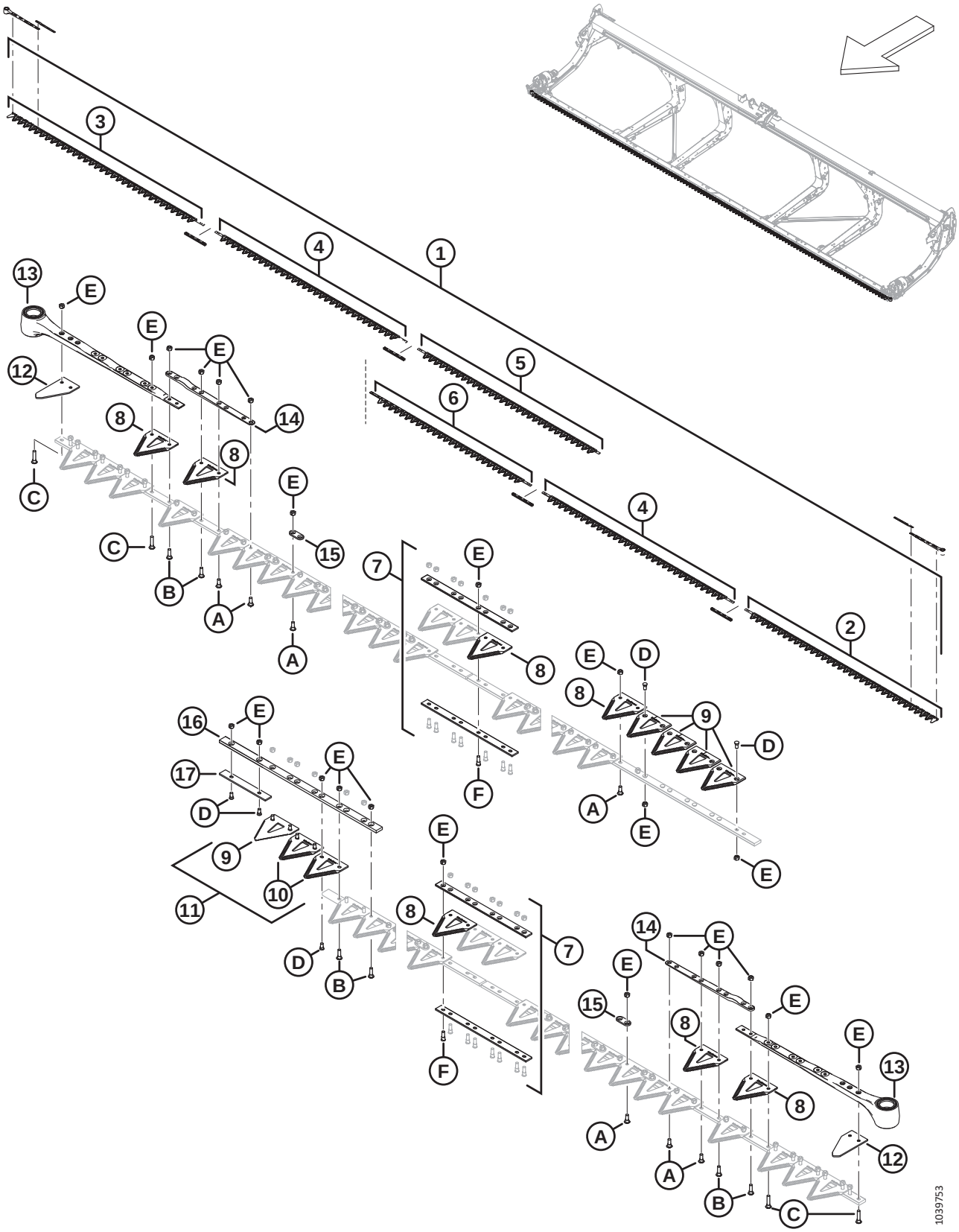
1039753

Ref	Part Number	Description	Qty	Serial Number
10	286464	SECTION – CLEARCUT COARSE BOTTOM CSK (10 PACK) [177]		
	286466	SECTION – CLEARCUT FINE BOTTOM CSK (10 PACK) [178]	OPT	
	286629	SECTION – CLEARCUT ULTRA COARSE BOTTOM CSK (10 PACK) [178]	OPT	
11	286861	KIT – CLEARCUT COARSE CENTER [179]		
	286862	KIT – CLEARCUT FINE CENTER [180]	OPT	
	286863	KIT – CLEARCUT ULTRA COARSE CENTER [181]	OPT	
12	226983	SECTION – END	2	
13	226941	KNIFE HEAD ASSEMBLY	2	
	115670	O-RING – 1.78 X 34.64		
	113937	DISC		
	113222	SEAL KIT		
	100500	BEARING – NEEDLE		
14	286440	BAR – FORGED	2	
15	286481	BAR – REINFORCEMENT (25 PACK) [182]	2	
16	286362	BAR – KNIFE OVERLAP GUIDE	1	
17	286363	BAR – WEAR	1	
A	286475	SCREW – M6 X 18 MM, C/W NUT (50 PACK)		
B	286476	SCREW – M6 X 22 MM, C/W NUT (25 PACK)		
C	286477	SCREW – M6 X 29 MM, C/W NUT (25 PACK)		
D	286478	SCREW – CSK M6 X 14 MM, C/W NUT (25 PACK)		
E	286479	NUT – CTR LOC CSK M6 X 1 (50 PACK)		
F	286621	SCREW – CSK M6 X 22 MM, C/W NUT (25 PACK)		

177. Quantities (individual sections): 2.
178. Quantities (individual sections): 2.
179. The kit includes five ClearCut™ coarse top CSK sections (NSS), two ClearCut™ coarse bottom CSK sections (NSS), and hardware.
180. The kit includes five ClearCut™ fine top CSK sections (NSS), two ClearCut™ fine bottom CSK sections (NSS), and hardware.
181. The kit includes five ClearCut™ ultra coarse top CSK sections (NSS), two ClearCut™ ultra coarse bottom CSK sections (NSS), and hardware.
182. Quantities (individual bars): 117.

38 Knife Drive – Single and Double Knife

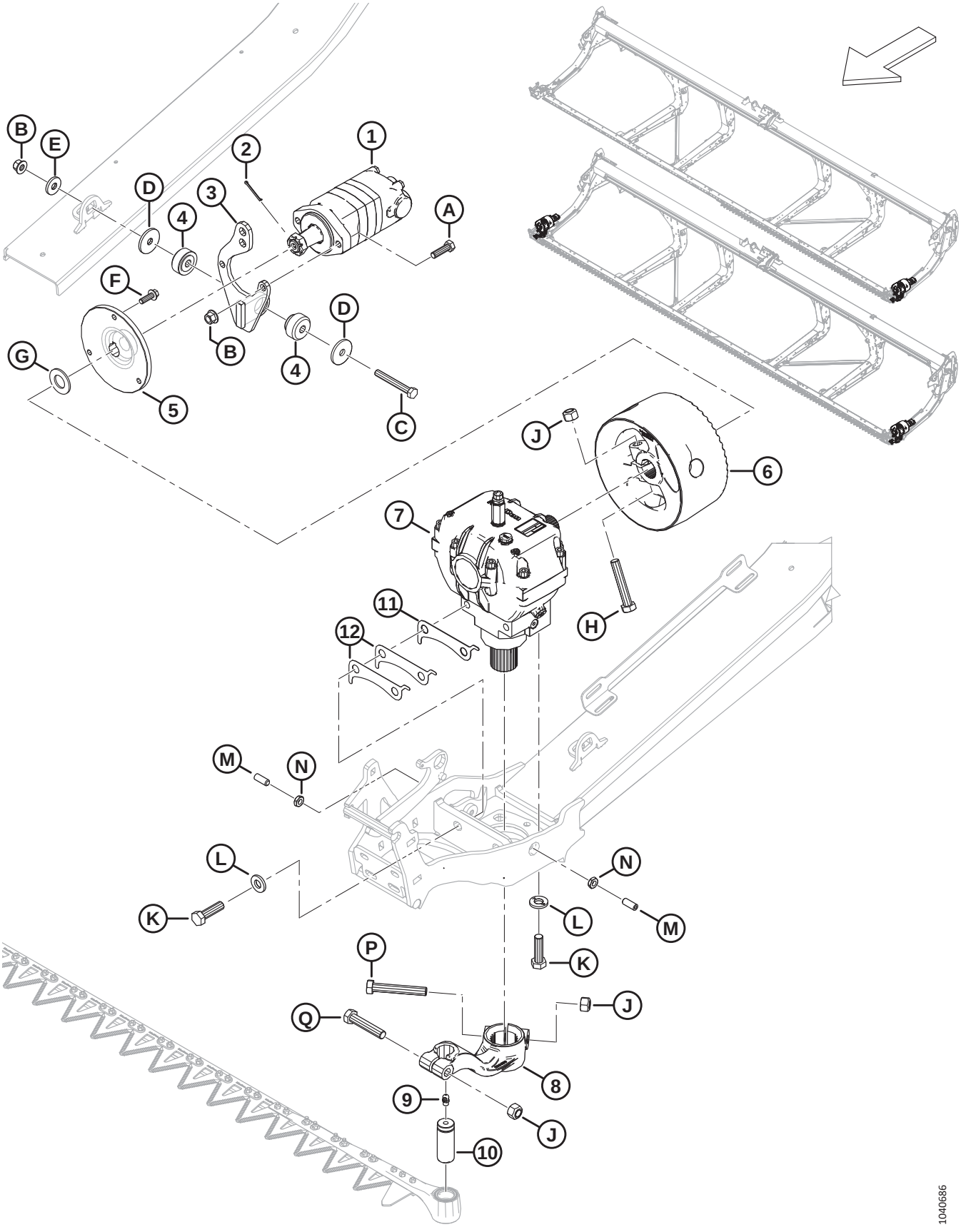

KNIFE DRIVE – SINGLE AND DOUBLE KNIFE

Ref	Part Number	Description	Qty	Serial Number
1	283002	MOTOR – EATON 2000 100 CC [183]	1	
	174304	SEAL KIT – EATON 2000 MOTOR		
	137375	NUT – SLTD JAM 1.0 -20 UNEF		
2	18606	PIN – COTTER 1/8 DIA X 1.5 ZP	1	
3	286826	SUPPORT – WELDT SAE-A MOTOR	1	
4	143107	BUSHING – RUBBER [184]	1	
5	286087	HUB – MACHINED	1	
6	286703	FLYWHEEL – KNIFE DRIVE C/W DECAL	1	
7	286089	DRIVE – KNIFE [185]	1	
8	226926	ARM – LH KNIFE DRIVE C/W DECAL	1	
	226927	ARM – RH KNIFE DRIVE C/W DECAL (DOUBLE KNIFE ONLY) [186]	1	
9	21194	FITTING – LUBRICATION 90° 1/8 NPT	1	
10	113229	PIN – SICKLE HEAD	1	
11	226400	SHIM – KNIFE DRIVE BOX, 1.2 MM [187]		
12	360870	SHIM – KNIFE DRIVE BOX, 0.6 MM [187]		
A	184669	BOLT – HEX HD M12 X 1.75 X 40-8.8-AA1J	2	
B	136431	NUT – HEX FLG CTR LOC M12 X 1.75-10	3	
C	184673	BOLT – HEX HD M12 X 1.75 X 90-10.9-AA1J	1	
D	11695	WASHER – FLAT	2	
E	4761	WASHER – FLAT	1	
F	184663	BOLT – HEX HD TFL M10 X 1.5 X 30-10.9-AA1J	3	
G	18603	WASHER – FLAT SAE 1 1/16 ID X 2.0 IN OD AA1J	1	
H	320214	BOLT – HEX HD M16 X 2 X 90-10.9-ZINC	1	
J	320026	NUT – HEX TOP LOCK M16 X 2-10-ZINC	3	
K	320311	BOLT – HEX HD M16 X 2 X 55-12.9-ZINC	4	
L	120901	WASHER – HARD L9 SPCL 5/8-82/85 HR 15N-AB0C	4	
M	320089	SCREW – SET M12 X 1.75 X 30 [188]	2	
N	184696	NUT – HEX THIN M12 X 1.75-05-AA1J	2	
P	320215	BOLT – HEX HD M16 X 2 X 100-10.9-ZINC	1	
Q	152602	BOLT – HEX HD M16 X 2 X 80-10.9-AA1J	1	

183. Motor includes seal kit (MD #174304), key, and slotted nut (MD #137375).
184. The rubber bushing (MD #143107) includes both halves shown in the illustration.
185. For repair parts, refer to Section *39 Knife Drive Box, page 97*.
186. Double-knife headers only.
187. Shim quantity varies for assembly clearances. Maximum allowable shims is four 1.2 mm shims (MD #226400) (or three 1.2 mm shims and two 0.6 mm shims [MD #360870]).
188. Set screw is used to adjust knife drive (MD #286089) left to right within the specified tolerance. Tighten lock nut (MD #184696) once knife drive has been adjusted correctly.

39 Knife Drive Box

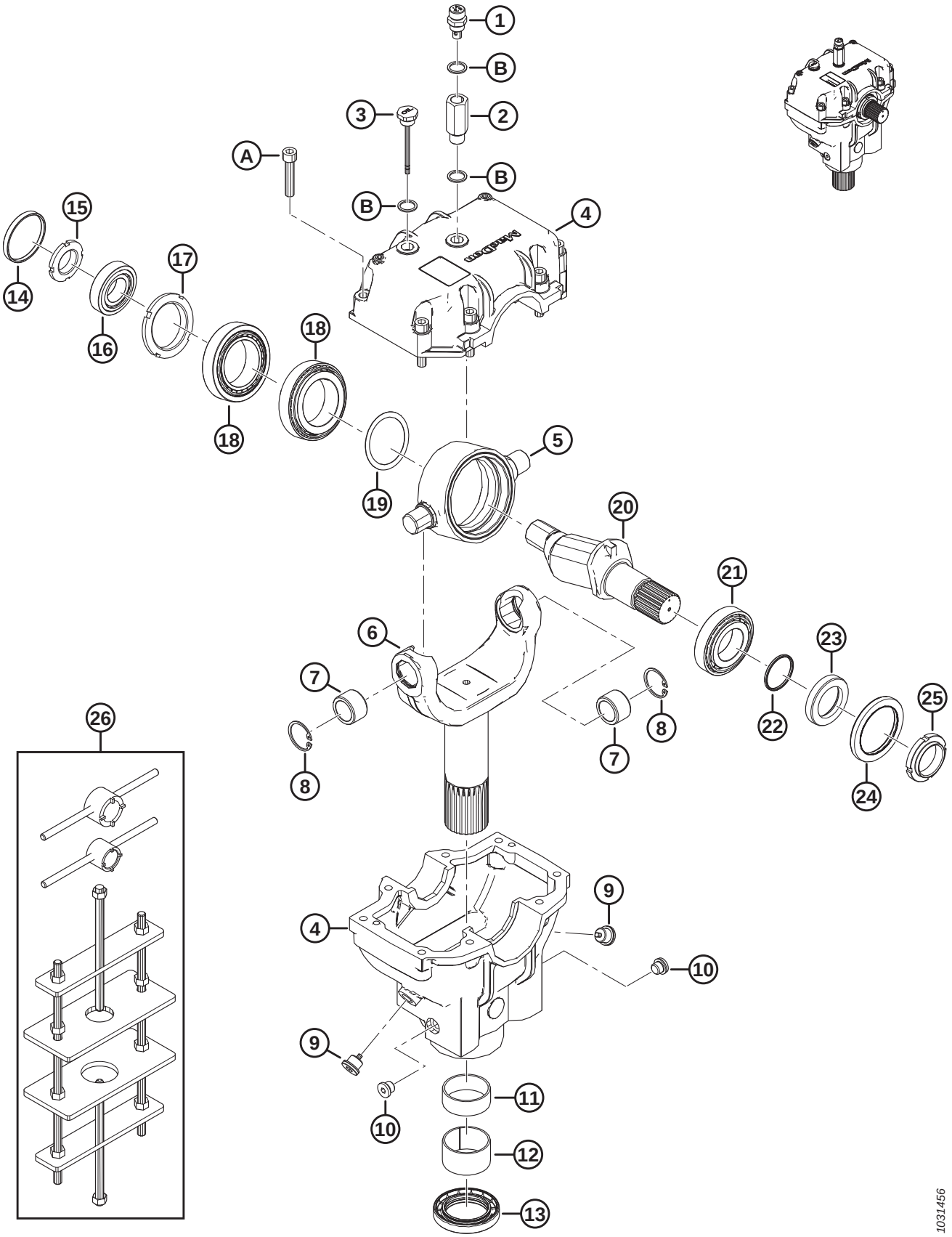

KNIFE DRIVE BOX

Ref	Part Number	Description	Qty	Serial Number
	286089	DRIVE – KNIFE		
1	286489	PLUG – BREATHER	1	
2	257089	EXTENSION	1	
3	286490	PLUG – LEVEL	1	
4	286485	CASTING – KNIFE DRIVE BOX [189]	1	
5	100721	PIVOT	1	
6	286483	YOKE	1	
7	100723	BUSHING – BRONZE	2	
8	100722	RING – RETAINING INTERNAL	2	
9	286488	PLUG – DRAIN	2	
10	252423	PLUG – DRAIN	2	
11	100726	BUSHING – STEEL	1	
12	286486	BUSHING – STEEL	1	
13	286445	SEAL – OIL	1	
14	100719	CAP – DUST	1	
15	100718	NUT – SPECIAL LOCK M30 X 1.5 CLASS 8.8	1	
16	100717	ASSSEMBLY – BEARING (CUP AND CONE)	1	
17	100715	NUT – SPECIAL LOCK M55 X 2 CLASS 8.8	1	
18	100720	ASSEMBLY – BEARING (CUP AND CONE)	2	
19	113152	KIT – SHIM	1	
20	100710	SHAFT	1	
21	100714	BEARING – ASSEMBLY CUP AND CONE	1	
22	100712	O-RING – 2.62 X 40.95	1	
23	102629	SPACER	1	
24	102630	SEAL – OIL (DOUBLE LIP)	1	
25	100709	NUT – SPECIAL M40 X 1.5 CLASS 8.8	1	
26	139003	KIT – WOBBLE BOX TOOL [190]	A/R	
A	113153	SCREW – HEX SOC HD M10 X 1.5 X 50-8.8-BO		
B	257054	WASHER – COPPER		

189. The knife drive box casting includes top and bottom knife drive box castings and eight screws (MD #113153).
190. The kit includes large socket tool, small socket tool, and wobble box jig frame.

40 Reel Support Arm and Lift Cylinders – Center Arm (FD230, FD235, FD240, and FD241)

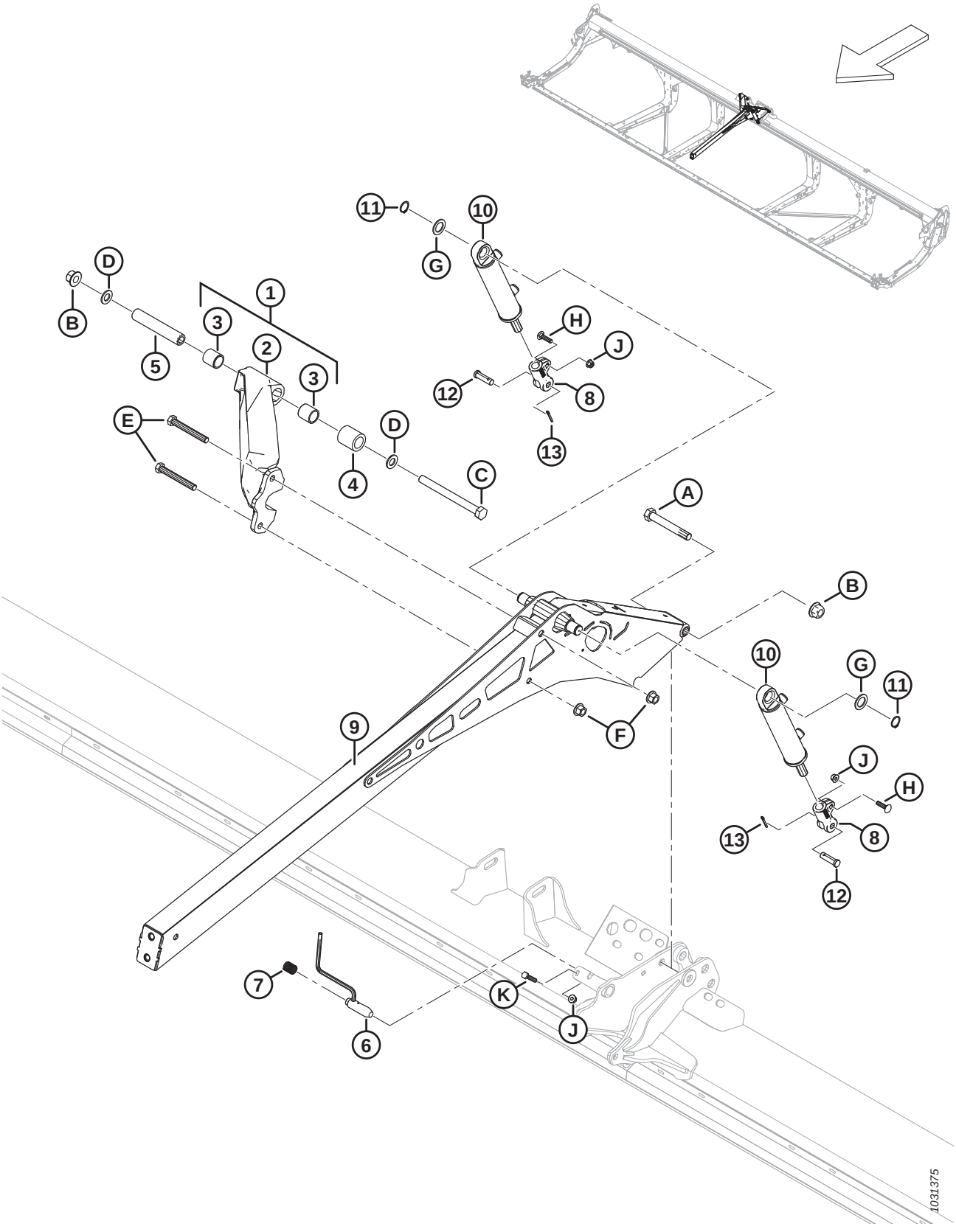

REEL SUPPORT ARM AND LIFT CYLINDERS – CENTER ARM (FD230, FD235, FD240, AND FD241)

Ref	Part Number	Description	Qty	Serial Number
1	311627	BRACE – SUB ASSY C/W BUSHINGS [191]	1	
2	NSS	BRACE – MACHINED [192]	1	
3	311613	BUSHING	2	
4	311612	SPACER – BRACE REEL PIVOT	1	
5	311611	TUBE – PIVOT REEL BRACE	1	
6	273680	WELDT – PIN	1	
7	289880	SPRING – COMPRESSION	1	
8	273860	CLEVIS – CYL END MACHINED	2	
9	273795	ARM – CENTER WELDT	1	
10	273790	CYLINDER – HYD	2	
	311285	SEAL KIT		
11	30144	RING – EXT RETAINING	2	
12	18621	PIN – CLEVIS	2	
13	18648	PIN – COTTER 3/16 DIA X 1.25 ZP	2	
A	320196	BOLT – HEX HD M20 X 2.5 X 140-SPCL-10.9-ZINC		
B	136122	NUT – HEX FLG CTR LOC M20 X 2.5-10-AA1J		
C	252581	BOLT – HEX HD M20 X 2.5 X 220-10.9-AA1J		
D	136701	WASHER – NORDLOCK M20		
E	320168	BOLT – HEX HD M16 X 2 X 125-8.8-ZINC		
F	136440	NUT – HEX FLG CTR LK M16 X 2-10-AA1J		
G	156178	WASHER – THRUST		
H	152732	BOLT – RHSN M10 X 1.5 X 40-8.8-AA1J		
J	135799	NUT – HEX FLG CTR LOC M10 X 1.5-10		
K	30629	BOLT – HEX HD M10 X 1.5 X 50-8.8-A3L		

191. Includes machined brace (NSS) and two bushings (MD #311613).
192. Not sold separately; to service this part, order brace assembly complete with bushings (MD #311627).

41 Reel Support Arm and Lift Cylinders – Center Arm, Right Side (FD240, FD245, and FD250)

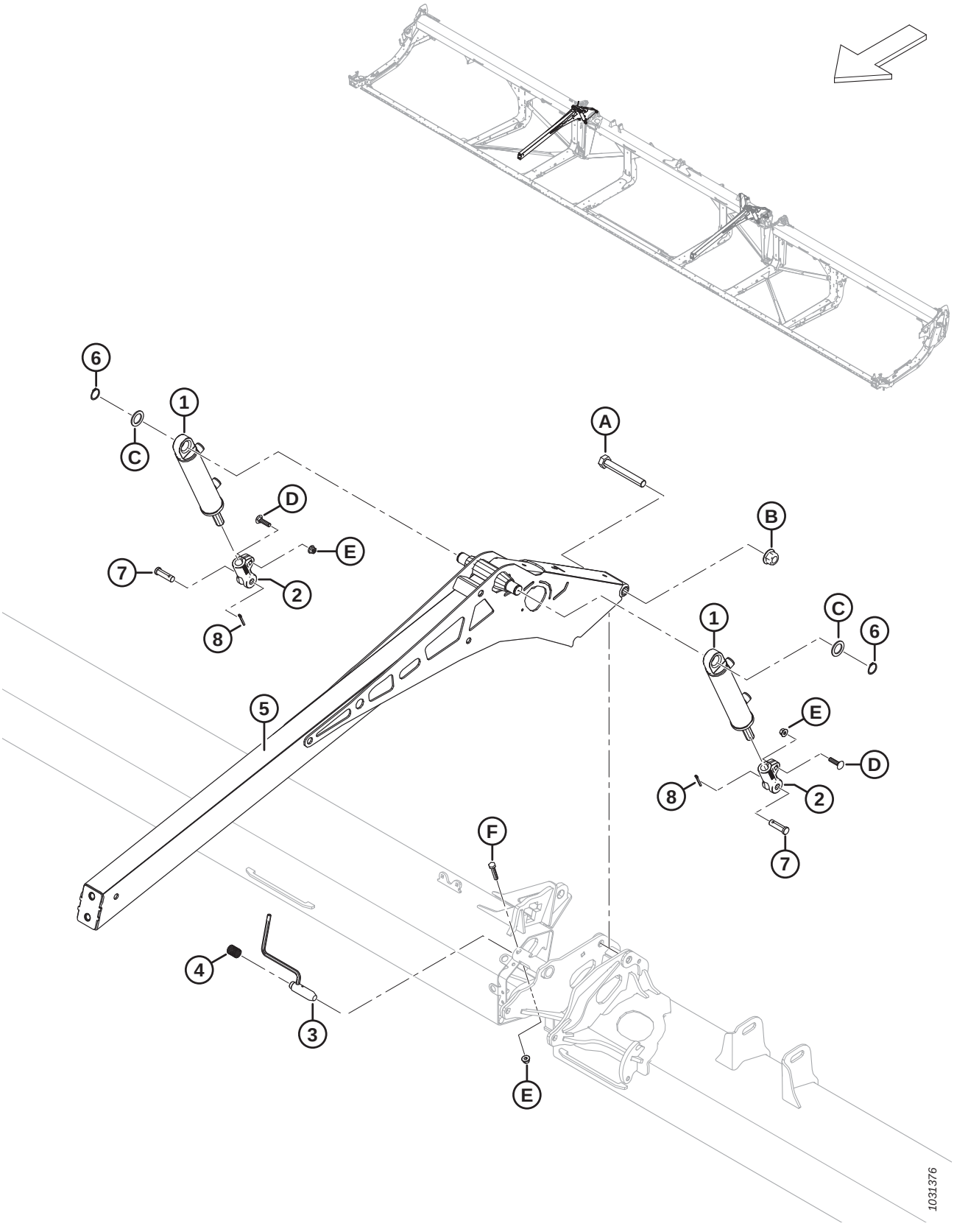

REEL SUPPORT ARM AND LIFT CYLINDERS – CENTER ARM, RIGHT SIDE (FD240, FD245, AND FD250)

Ref	Part Number	Description	Qty	Serial Number
1	273790	CYLINDER – HYD	2	
	311285	SEAL KIT		
2	273860	CLEVIS – CYL END MACHINED	2	
3	273680	WELDT – PIN	1	
4	289880	SPRING – COMPRESSION	1	
5	273795	ARM – CENTER WELDT	2	
6	30144	RING – EXT RETAINING	2	
7	18621	PIN – CLEVIS	2	
8	18648	PIN – COTTER 3/16 DIA X 1.25 ZP	2	
A	320196	BOLT – HEX HD M20 X 2.5 X 140-SPCL-10.9-ZINC	2	
B	136122	NUT – HEX FLG CTR LOC M20 X 2.5-10-AA1J	3	
C	156178	WASHER – THRUST	4	
D	152732	BOLT – RHSN M10 X 1.5 X 40-8.8-AA1J	4	
E	135799	NUT – HEX FLG CTR LOC M10 X 1.5-10	6	
F	30629	BOLT – HEX HD M10 X 1.5 X 50-8.8-A3L	2	

42 Reel Support Arm and Lift Cylinders – Center Arm, Left Side (FD240, FD245, and FD250)

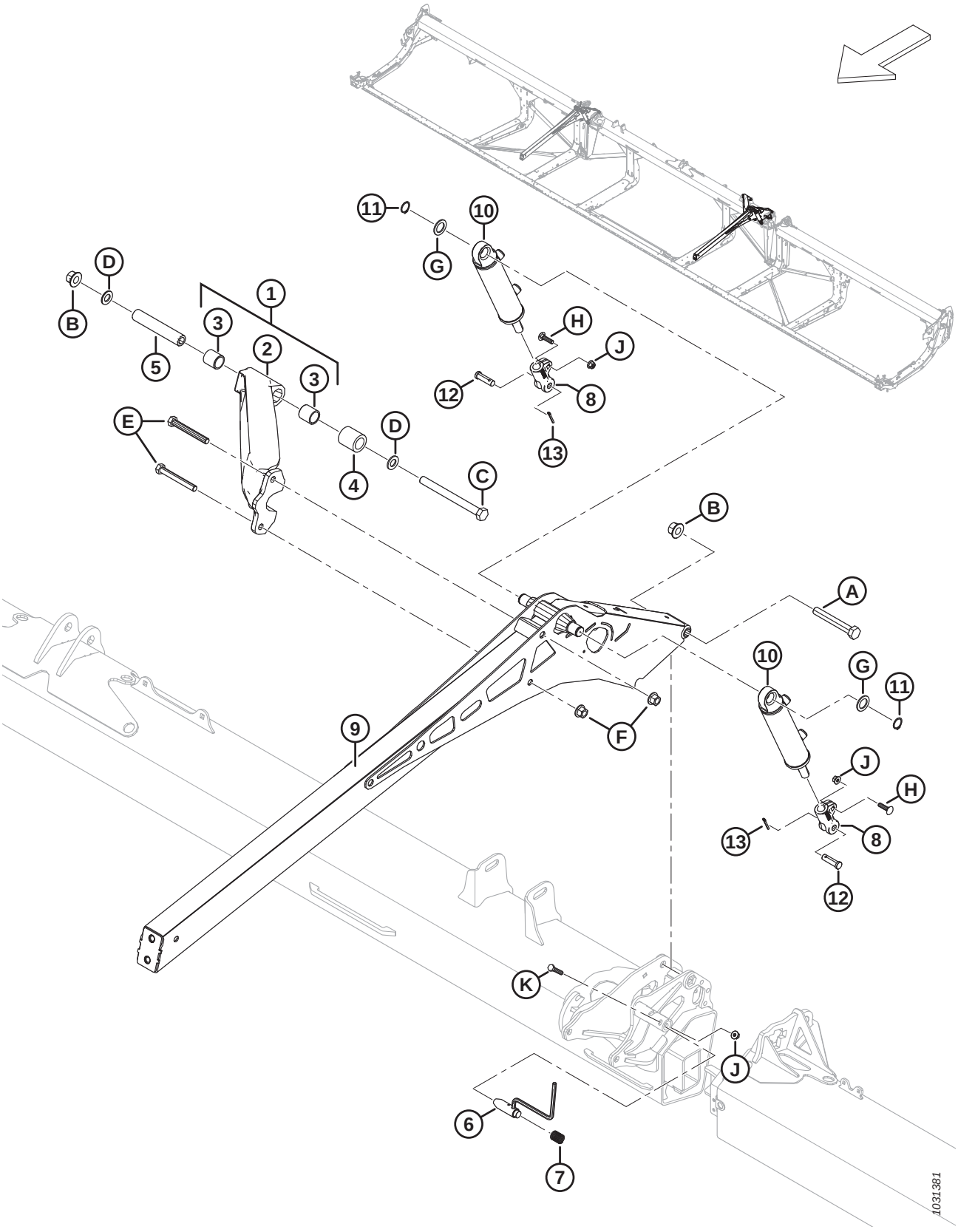

REEL SUPPORT ARM AND LIFT CYLINDERS – CENTER ARM, LEFT SIDE (FD240, FD245, AND FD250)

Ref	Part Number	Description	Qty	Serial Number
1	311627	BRACE – SUB ASSY C/W BUSHINGS [193]	1	
2	NSS	BRACE – MACHINED [194]	1	
3	311613	BUSHING	2	
4	311612	SPACER – BRACE REEL PIVOT	1	
5	311611	TUBE – PIVOT REEL BRACE	1	
6	273680	WELDT – PIN	1	
7	289880	SPRING – COMPRESSION	1	
8	273860	CLEVIS – CYL END MACHINED	2	
9	273795	ARM – CENTER WELDT	1	
10	273791	CYLINDER – HYD	2	
	313794	SEAL KIT		
11	30144	RING – EXT RETAINING	2	
12	18621	PIN – CLEVIS	2	
13	18648	PIN – COTTER 3/16 DIA X 1.25 ZP	2	
A	320196	BOLT – HEX HD M20 X 2.5 X 140-SPCL-10.9-ZINC		
B	136122	NUT – HEX FLG CTR LOC M20 X 2.5-10-AA1J		
C	252581	BOLT – HEX HD M20 X 2.5 X 220-10.9-AA1J		
D	136701	WASHER – NORDLOCK M20		
E	320168	BOLT – HEX HD M16 X 2 X 125-8.8-ZINC		
F	136440	NUT – HEX FLG CTR LK M16 X 2-10-AA1J		
G	156178	WASHER – THRUST		
H	152732	BOLT – RHSN M10 X 1.5 X 40-8.8-AA1J		
J	135799	NUT – HEX FLG CTR LOC M10 X 1.5-10		
K	30629	BOLT – HEX HD M10 X 1.5 X 50-8.8-A3L		

193. Assembly includes machined brace (NSS) and two bushings (MD #311613).
194. Not sold separately; to service this part, order brace assembly complete with bushings (MD #311627).

43 Reel Support Arm and Lift Cylinders – Outer Arms, Single Reel

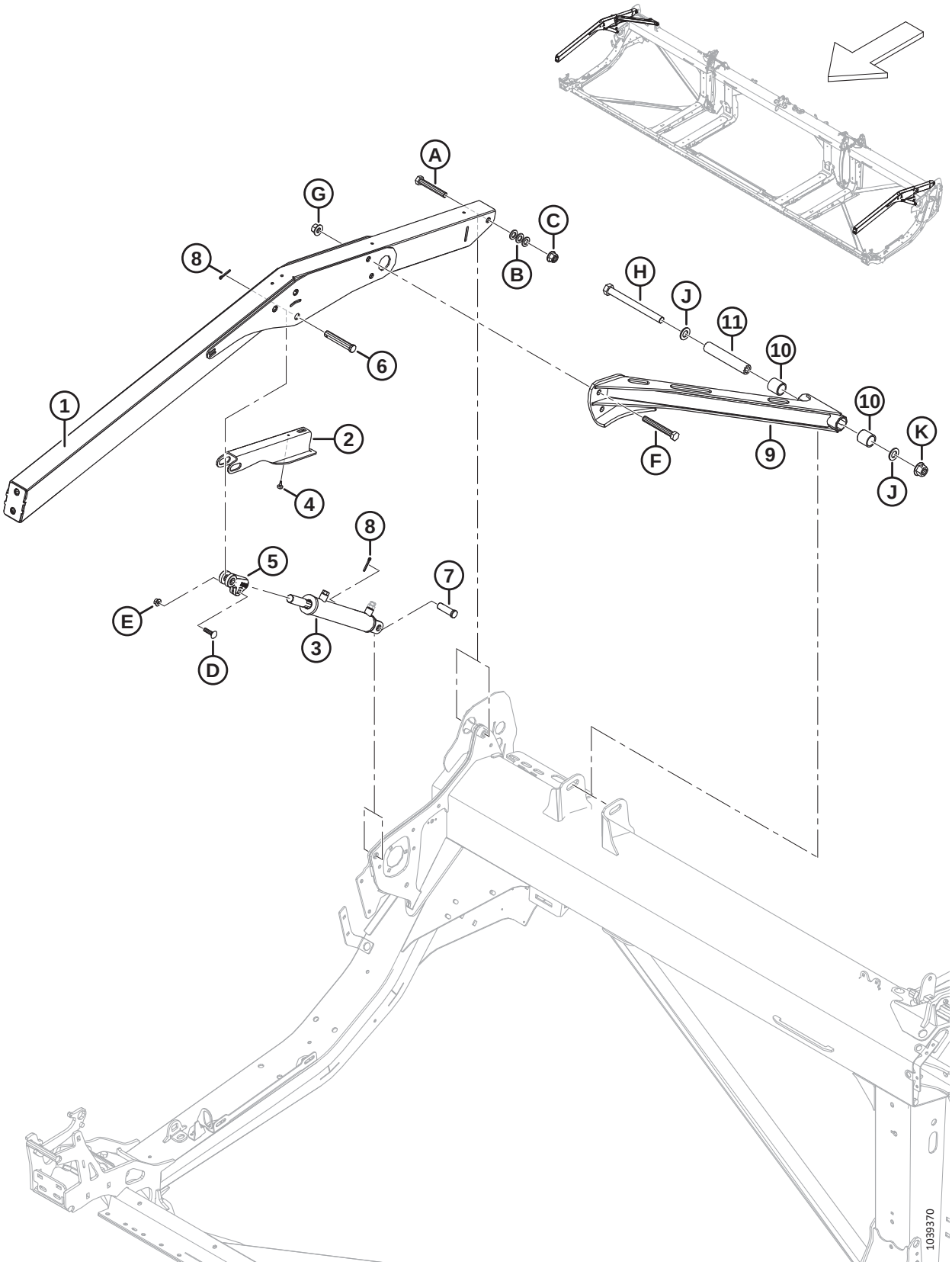

Ref	Part Number	Description	Qty	Serial Number
1	360035	ASSY – SR OUTER ARM W/ DECAL [195]	2	
2	340191	SUPPORT – REEL PROP	2	
3	273788	CYLINDER – HYD (RH) [196]	1	
	323687	SEAL KIT		
	273789	CYLINDER – HYD (LH) [196]	1	
	323688	SEAL KIT		
	174879	BREATHER – ORB #6		
4	273653	BUMPER – RUBBER	2	
5	228338	CLEVIS – CYL END MACHINED	2	
6	18629	PIN – CLEVIS	2	
7	18626	PIN – CLEVIS (RH) [197]	1	
	322970	PIN – CLEVIS 3/4 X 1-31/32 (LH) [197]	1	
8	18648	PIN – COTTER 3/16 DIA X 1.25 ZP	4	
9	340648	BRACE – SR W/ BUSHINGS [198]	1	
10	311613	BUSHING	2	
11	311611	TUBE – PIVOT REEL BRACE	1	
A	136310	BOLT – HEX HD M16 X 2 X 105-SPCL-8.8-AA1J		
B	184717	WASHER – FLAT REG M16-200HV-AA1J		
C	152520	NUT – HEX FLG TECH LK M16 X 2-10-AA1J		
D	152732	BOLT – RHSN M10 X 1.5 X 40-8.8-AA1J		
E	135799	NUT – HEX FLG CTR LOC M10 X 1.5-10		
F	320168	BOLT – HEX HD M16 X 2 X 125-8.8-AA1J		
G	136440	NUT – HEX FLG CTR LK M16 X 2-10-AA1J		
H	252581	BOLT – HEX HD M20 X 2.5 X 220-10.9-AA1J		
J	136701	WASHER – NORDLOCK M20		
K	136122	NUT – HEX FLG CTR LOC M20 X 2.5-10-AA1J		

195. Arm includes two reel entanglement hazard decals (MD #360541).
196. For RH cylinder (MD #273788), order seal kit (MD #323687); for LH cylinder (MD #273789), order seal kit (MD #323688).
197. To secure the RH cylinder to the right endsheet, use clevis pin (MD #18626); to secure the LH cylinder to the left endsheet, use clevis pin (MD #322970).
198. The brace includes two bushings (MD #311613).

44 Reel Support Arm and Lift Cylinders – Outer Arms, Double and Triple Reel

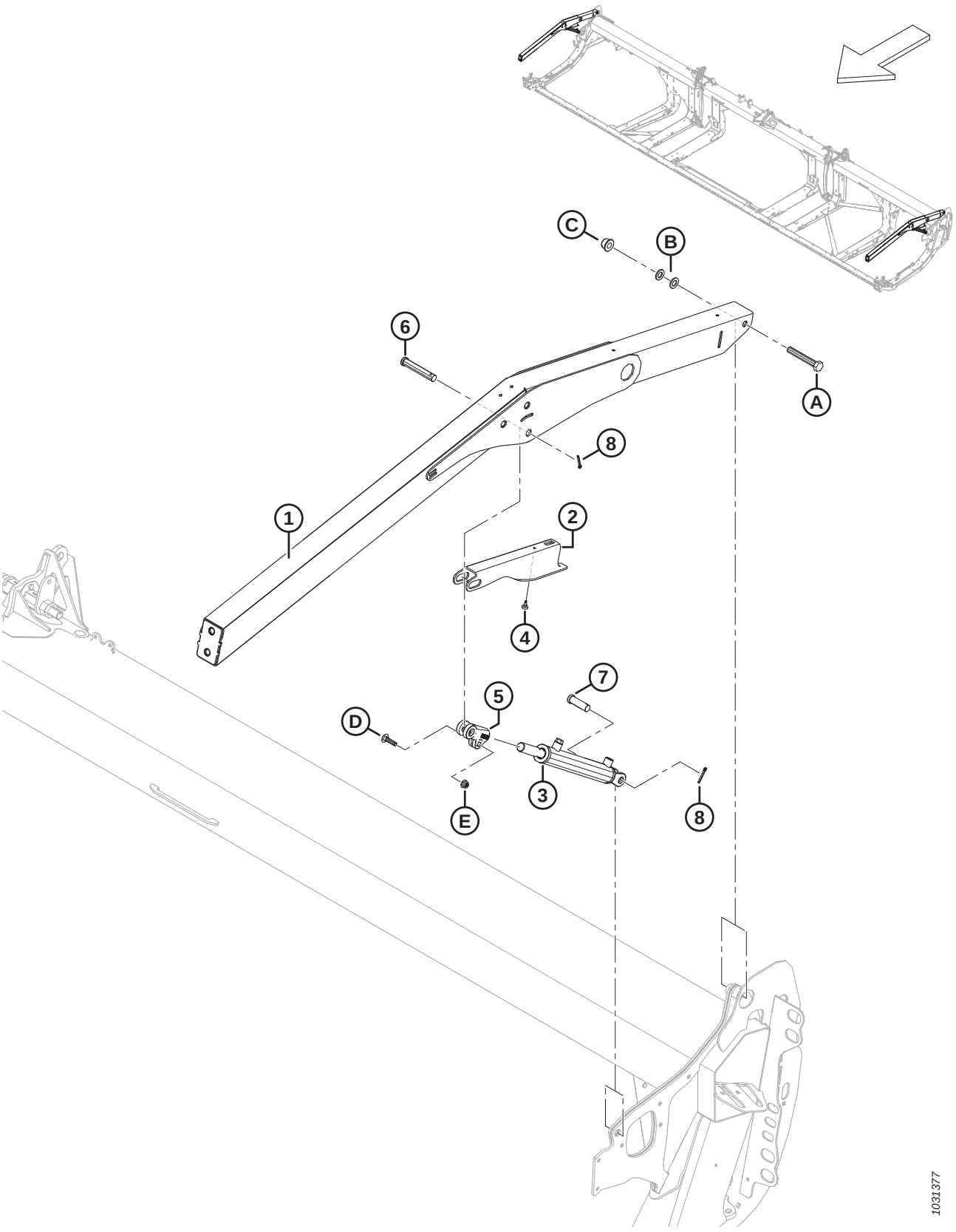

REEL SUPPORT ARM AND LIFT CYLINDERS – OUTER ARMS, DOUBLE AND TRIPLE REEL

Ref	Part Number	Description	Qty	Serial Number
1	311949	ARM – OUTER W/ DECAL [199]	2	
2	340191	SUPPORT – REEL PROP	2	
3	273787	CYLINDER – HYD	2	
	311284	SEAL KIT		
	174879	BREATHER – ORB #6		
4	273653	BUMPER – RUBBER	2	
5	228338	CLEVIS – CYL END MACHINED	2	
6	18629	PIN – CLEVIS	2	
7	18626	PIN – CLEVIS	2	
8	18648	PIN – COTTER 3/16 DIA X 1.25 ZP	4	
A	136310	BOLT – HEX HD M16 X 2 X 105-SPCL-8.8-AA1J		
B	184717	WASHER – FLAT REG M16-200HV-AA1J		
C	152520	NUT – HEX FLG TECH LK M16 X 2-10-AA1J		
D	152732	BOLT – RHSN M10 X 1.5 X 40-8.8-AA1J		
E	135799	NUT – HEX FLG CTR LOC M10 X 1.5-10		

199. Arm includes two reel entanglement hazard decals (MD #360541).

45 Reel Arm Components – Right Arm, Single Reel (FD225)

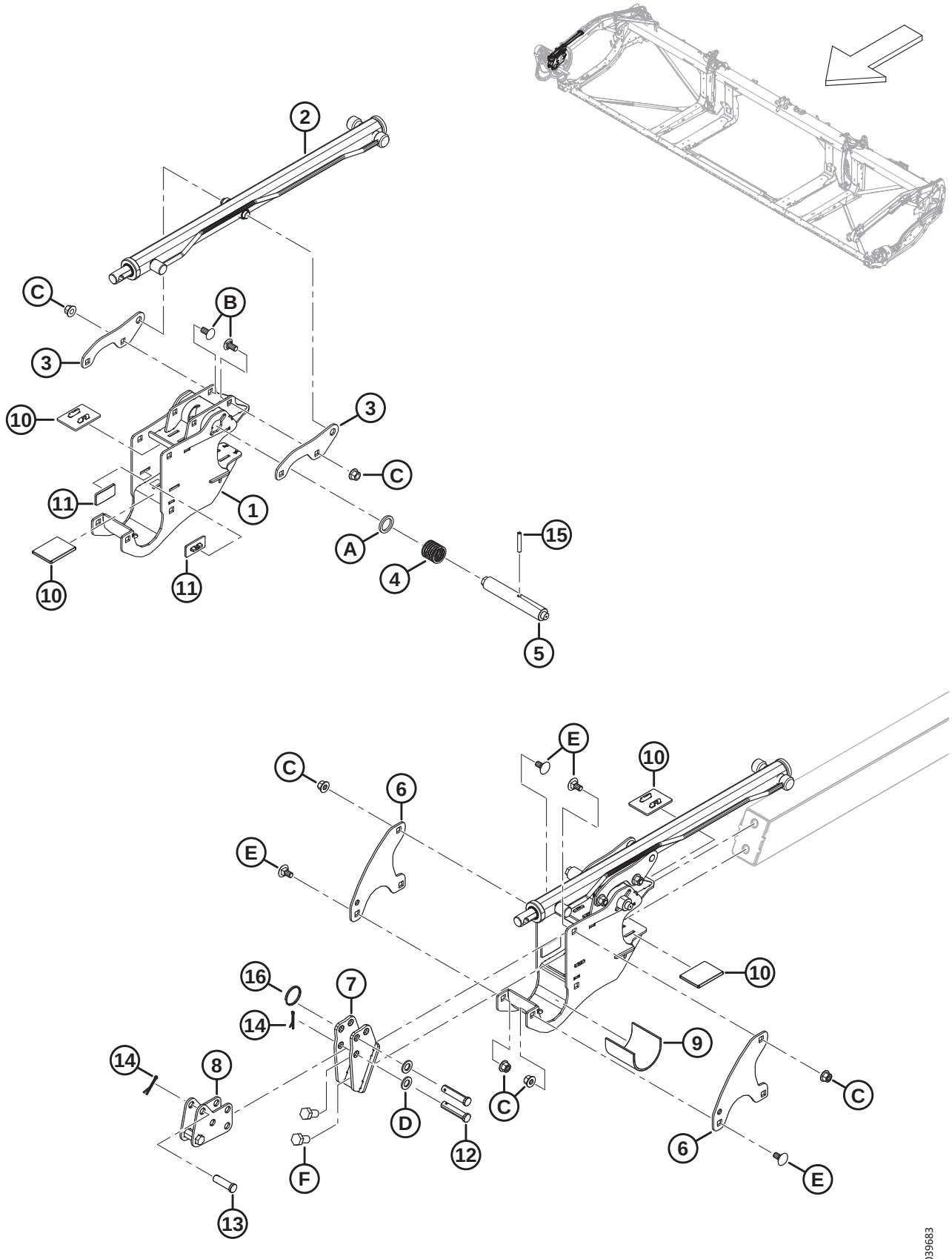

REEL ARM COMPONENTS – RIGHT ARM, SINGLE REEL (FD225)

Ref	Part Number	Description	Qty	Serial Number
1	340224	SUPPORT – REEL C/W DECAL	1	
2	273283	CYLINDER – FORE AFT [200]	1	
	313964	SEAL KIT		
3	273138	LUG	2	
4	273861	SPRING – COMP - LEFT HAND HELIX	1	
5	273278	PIN – CAM LATCH, DRIVES RH	1	
6	273122	PLATE – REEL RETAINER	2	
7	311237	SUPPORT – FRONT ANCHOR WELDT	1	
8	311238	ANCHOR – FORE AFT SUB WELDT	1	
9	228381	SLEEVE – REEL HUB SUPPORT	1	
10	273831	PAD – REEL DRIVE WEAR	4	
11	273777	PAD – REEL DRIVE WEAR	2	
12	18704	PIN – CLEVIS, 15 MM X 68 MM OAL	2	
13	18621	PIN – CLEVIS, 15 MM X 50 MM OAL	1	
14	18607	PIN – COTTER 5/32 DIA X 1.5 ZP	2	
15	16681	PIN – SPRING 5/16 DIA X 2.0 LG	1	
16	320207	RING – SPLIT	1	
A	273304	WASHER – CAM LATCH		
B	152439	BOLT – RHSSN M12 X 1.75 X 25-8.8-AA1J		
C	136431	NUT – HEX FLG CTR LOC M12 X 1.75-10		
D	184717	WASHER – FLAT REG M16-200HV-AA1J		
E	135903	BOLT – RHSN M12 X 1.75 X 25-8.8-ZINC		
F	136143	BOLT – HEX HD TFL M16 X 2 X 30-10.9-AA1J		

200. Right arm, single reel only.

46 Reel Arm Components – Right Arm, Double Reel (FD230, FD235, FD240, and FD241)

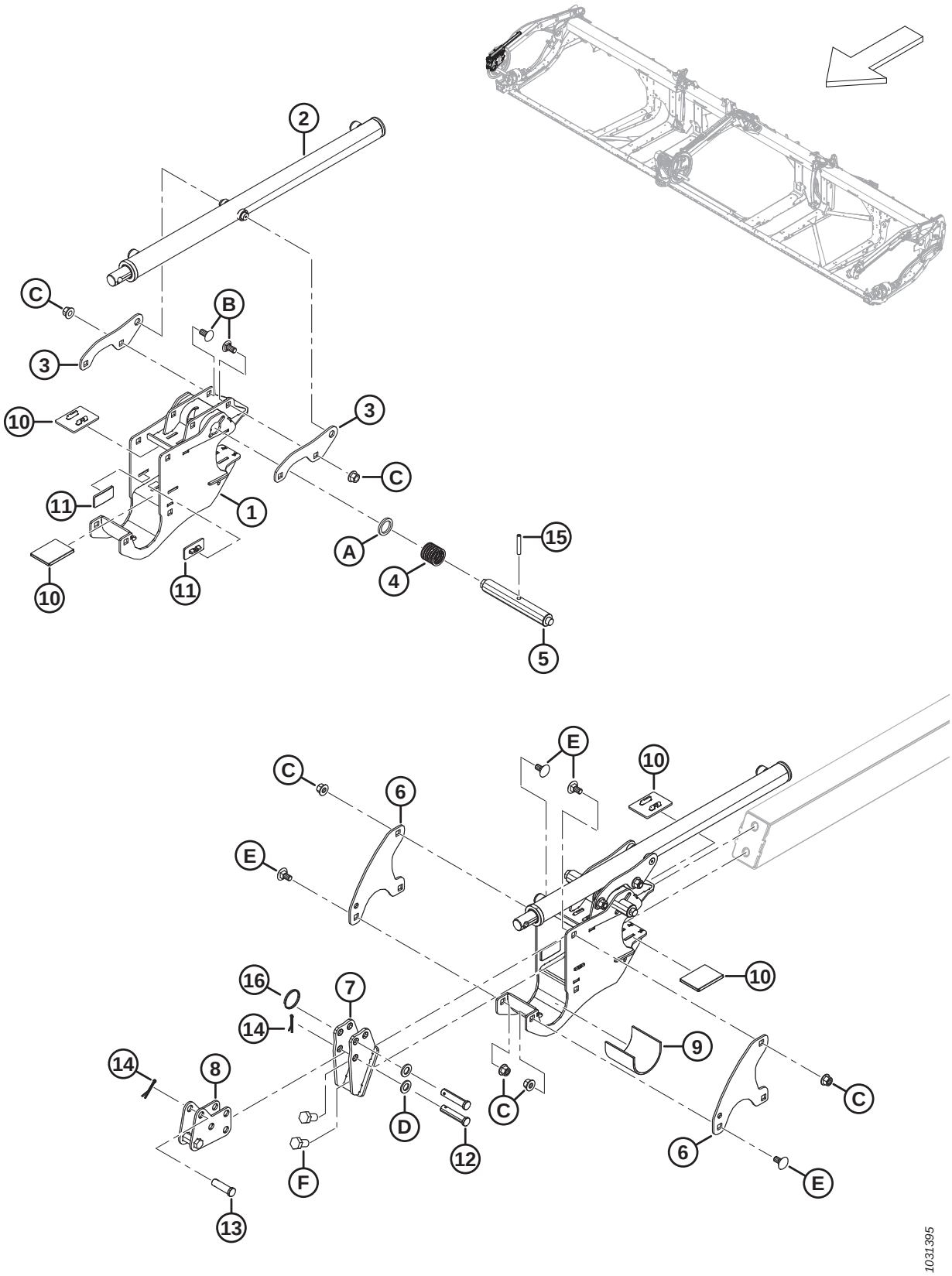

REEL ARM COMPONENTS – RIGHT ARM, DOUBLE REEL (FD230, FD235, FD240, AND FD241)

Ref	Part Number	Description	Qty	Serial Number
1	340224	SUPPORT – REEL CENTER C/W DECAL	1	
2	273284	CYLINDER – FORE AFT (RIGHT ARM ONLY)	1	
	313964	SEAL KIT		
3	273138	LUG	2	
4	273861	SPRING – COMP - LEFT HAND HELIX	1	
5	273281	PIN – CAM LATCH RH CAMS	1	
6	273122	PLATE – REEL RETAINER	2	
7	311237	SUPPORT – FRONT ANCHOR WELDT	1	
8	311238	ANCHOR – FORE AFT SUB WELDT	1	
9	228381	SLEEVE – REEL HUB SUPPORT	1	
10	273831	PAD – REEL DRIVE WEAR	4	
11	273777	PAD – REEL DRIVE WEAR	2	
12	18704	PIN – CLEVIS, 15 MM X 68 MM OAL	2	
13	18621	PIN – CLEVIS, 15 MM X 50 MM OAL	1	
14	18607	PIN – COTTER 5/32 DIA X 1.5 ZP	3	
15	16681	PIN – SPRING 5/16 DIA X 2.0 LG	1	
16	320207	RING – SPLIT	1	
A	273304	WASHER – CAM LATCH		
B	152439	BOLT – RHSSN M12 X 1.75 X 25-8.8-AA1J		
C	136431	NUT – HEX FLG CTR LOC M12 X 1.75-10		
D	184717	WASHER – FLAT REG M16-200HV-AA1J		
E	135903	BOLT – RHSN M12 X 1.75 X 25-8.8-ZINC		
F	136143	BOLT – HEX HD TFL M16 X 2 X 30-10.9-AA1J		

47 Reel Arm Components – Right Arm, Triple Reel (FD240, FD245, and FD250)

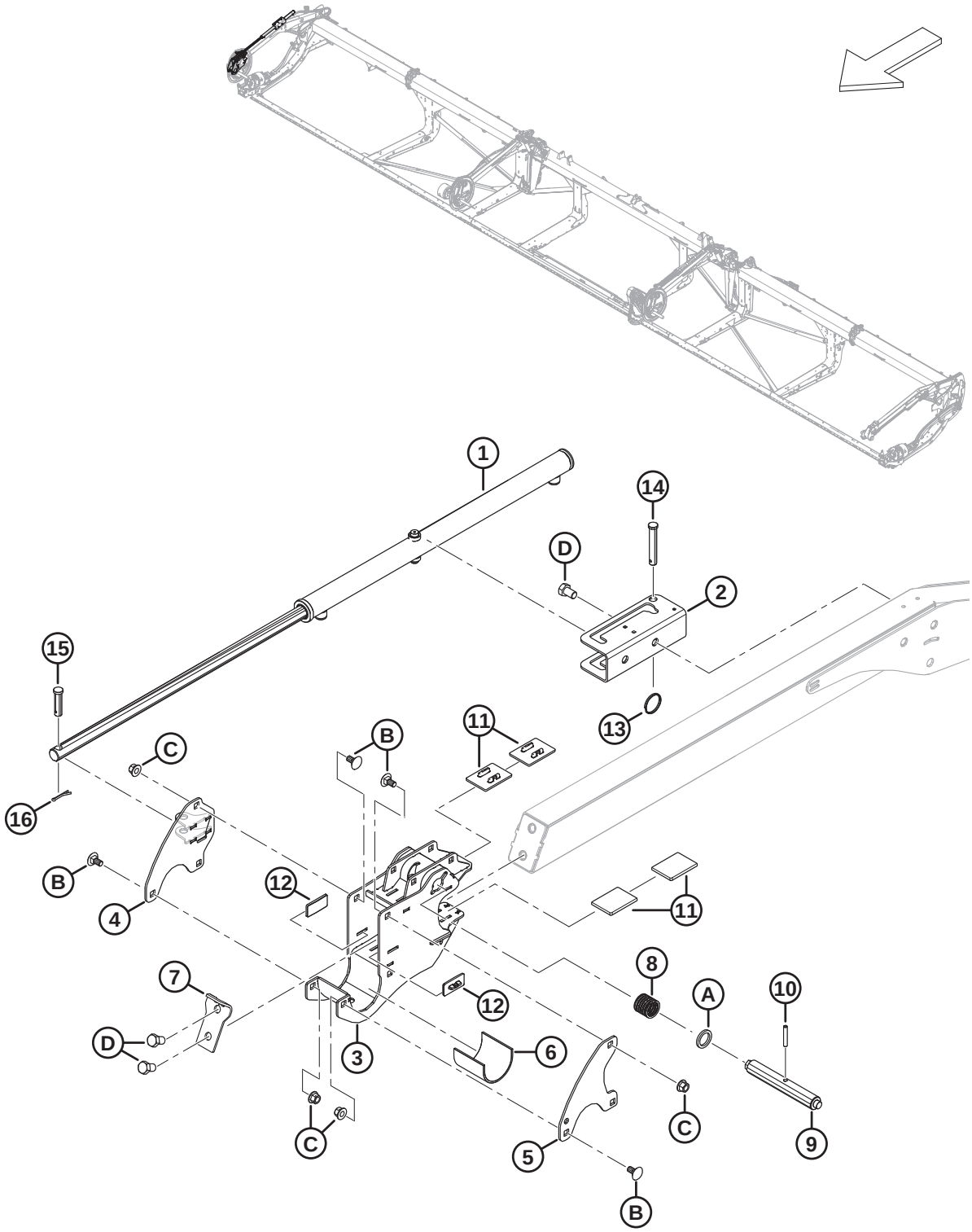

REEL ARM COMPONENTS – RIGHT ARM, TRIPLE REEL (FD240, FD245, AND FD250)

Ref	Part Number	Description	Qty	Serial Number
1	273284	CYLINDER – FORE AFT	1	
	313964	SEAL KIT		
2	273637	BRACKET – CYLINDER MOUNT	1	
3	340224	SUPPORT – REEL CENTER C/W DECAL	1	
4	340571	BRACKET WELDT – FORE AFT RH CAM	1	
5	273122	PLATE – REEL RETAINER	1	
6	228381	SLEEVE – REEL HUB SUPPORT	1	
7	311359	PLATE – STOP REEL	1	
8	273861	SPRING – COMP - LEFT HAND HELIX	1	
9	273281	PIN – CAM LATCH RH CAMS	1	
10	16681	PIN – SPRING 5/16 DIA X 2.0 LG	1	
11	273831	PAD – REEL DRIVE WEAR	4	
12	273777	PAD – REEL DRIVE WEAR	2	
13	320207	RING – SPLIT	1	
14	19958	PIN – CLEVIS	1	
15	103879	PIN – CLEVIS	1	
16	18607	PIN – COTTER 5/32 DIA X 1.5 ZP	1	
A	273304	WASHER – CAM LATCH		
B	135903	BOLT – RHSN M12 X 1.75 X 25-8.8-ZINC		
C	136431	NUT – HEX FLG CTR LOC M12 X 1.75-10		
D	136143	BOLT – HEX HD TFL M16 X 2 X 30-10.9-AA1J		

48 Reel Arm Components – Center Arm (FD230, FD235, FD240, FD241, FD245, and FD250)

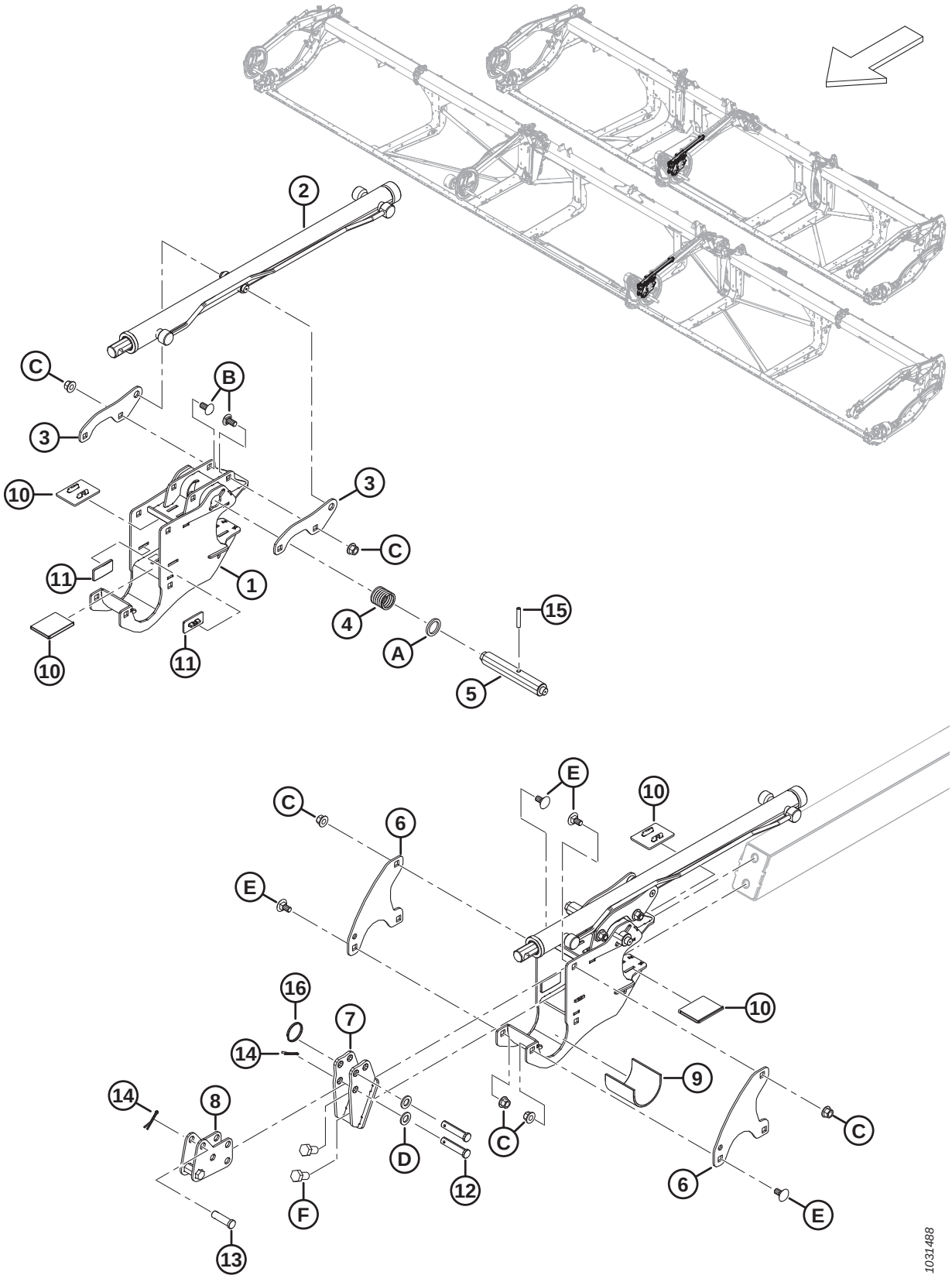

REEL ARM COMPONENTS – CENTER ARM (FD230, FD235, FD240, FD241, FD245, AND FD250)

Ref	Part Number	Description	Qty	Serial Number
1	340224	SUPPORT – REEL CENTER C/W DECAL	1	
2	273283	CYLINDER – FORE AFT	1	
	313964	SEAL KIT		
3	273138	LUG	2	
4	273861	SPRING – COMP - LEFT HAND HELIX	1	
5	273278	PIN – CAM LATCH-DRIVES AND RH CTR	1	
6	273122	PLATE – REEL RETAINER	2	
7	311237	SUPPORT – FRONT ANCHOR WELDT	1	
8	311238	ANCHOR – FORE AFT SUB WELDT	1	
9	228381	SLEEVE – REEL HUB SUPPORT	1	
10	273831	PAD – REEL DRIVE WEAR	4	
11	273777	PAD – REEL DRIVE WEAR	2	
12	18704	PIN – CLEVIS, 15 MM X 68 MM OAL	2	
13	18621	PIN – CLEVIS, 15 MM X 50 MM OAL	1	
14	18607	PIN – COTTER 5/32 DIA X 1.5 ZP	3	
15	16681	PIN – SPRING 5/16 DIA X 2.0 LG	1	
16	320207	RING – SPLIT	1	
A	273304	WASHER – CAM LATCH		
B	152439	BOLT – RHSSN M12 X 1.75 X 25-8.8-AA1J		
C	136431	NUT – HEX FLG CTR LOC M12 X 1.75-10		
D	184717	WASHER – FLAT REG M16-200HV-AA1J		
E	135903	BOLT – RHSN M12 X 1.75 X 25-8.8-ZINC		
F	136143	BOLT – HEX HD TFL M16 X 2 X 30-10.9-AA1J		

49 Reel Arm Components – Center Right Arm, Triple Reel (FD240, FD245, and FD250)

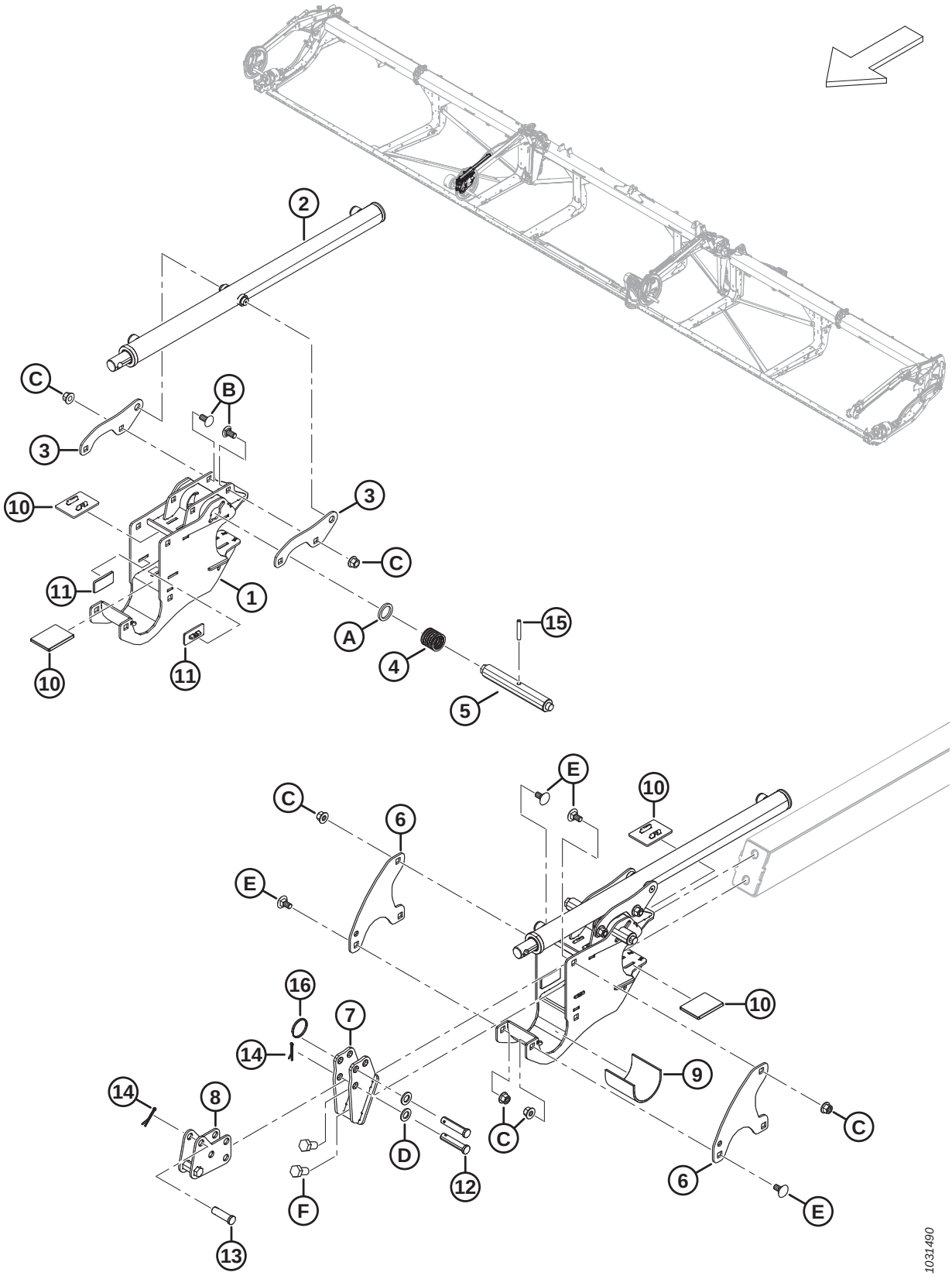

REEL ARM COMPONENTS – CENTER RIGHT ARM, TRIPLE REEL (FD240, FD245, AND FD250)

Ref	Part Number	Description	Qty	Serial Number
1	340224	SUPPORT – REEL CENTER C/W DECAL	1	
2	273284	CYLINDER – FORE AFT	1	
	313964	SEAL KIT		
3	273138	LUG	2	
4	273861	SPRING – COMP - LEFT HAND HELIX	1	
5	273278	PIN – CAM LATCH-DRIVES AND RH CTR	1	
6	273122	PLATE – REEL RETAINER	2	
7	311237	SUPPORT – FRONT ANCHOR WELDT	1	
8	311238	ANCHOR – FORE AFT SUB WELDT	1	
9	228381	SLEEVE – REEL HUB SUPPORT	1	
10	273831	PAD – REEL DRIVE WEAR	4	
11	273777	PAD – REEL DRIVE WEAR	2	
12	18704	PIN – CLEVIS, 15 MM X 68 MM OAL	2	
13	18621	PIN – CLEVIS, 15 MM X 50 MM OAL	1	
14	18607	PIN – COTTER 5/32 DIA X 1.5 ZP	3	
15	16681	PIN – SPRING 5/16 DIA X 2.0 LG	1	
16	320207	RING – SPLIT	1	
A	273304	WASHER – CAM LATCH		
B	152439	BOLT – RHSSN M12 X 1.75 X 25-8.8-AA1J		
C	136431	NUT – HEX FLG CTR LOC M12 X 1.75-10		
D	184717	WASHER – FLAT REG M16-200HV-AA1J		
E	135903	BOLT – RHSN M12 X 1.75 X 25-8.8-ZINC		
F	136143	BOLT – HEX HD TFL M16 X 2 X 30-10.9-AA1J		

50 Reel Arm Components – Left Arm (FD225, FD230, FD235, FD240, FD241, FD245, and FD250)

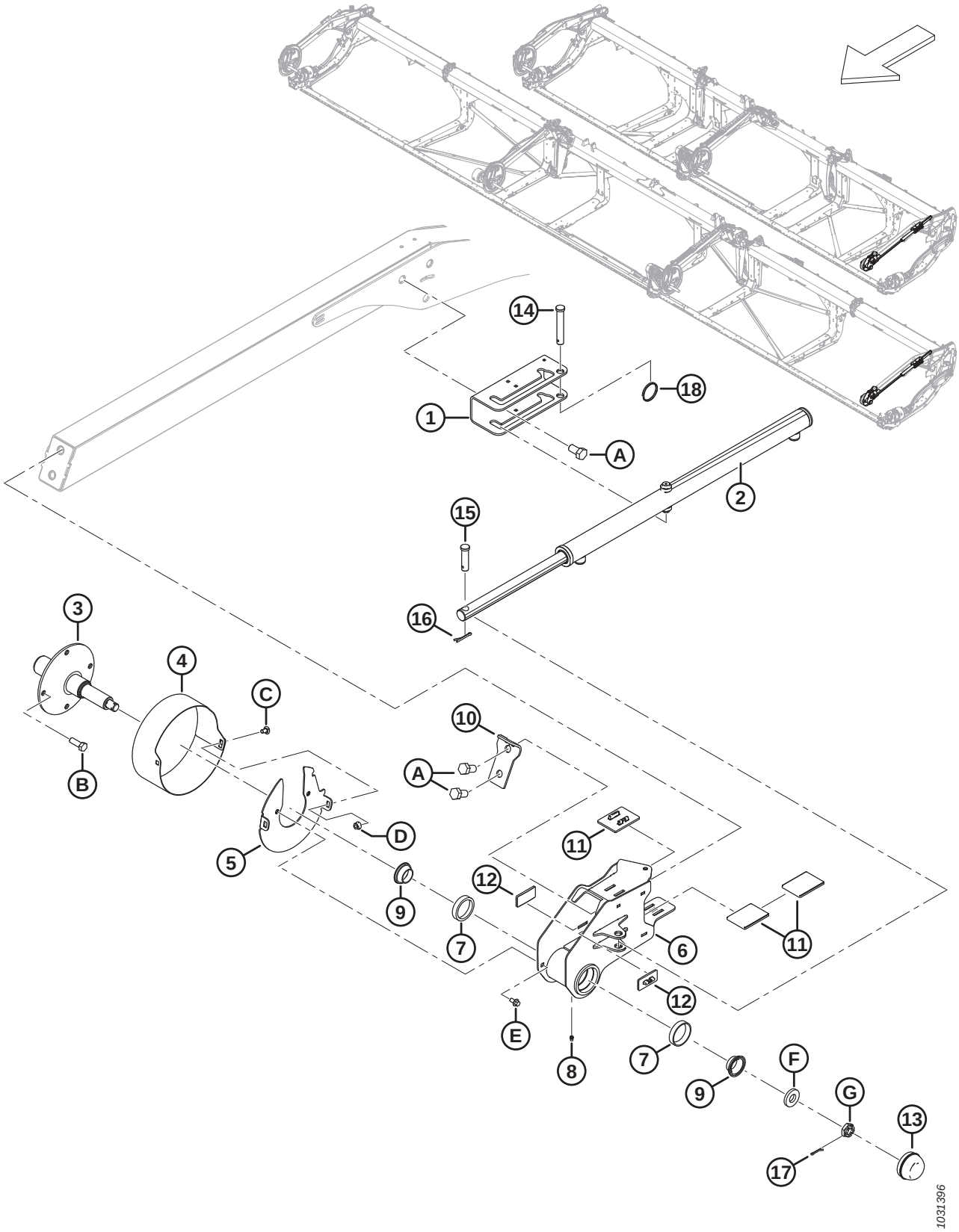

REEL ARM COMPONENTS – LEFT ARM (FD225, FD230, FD235, FD240, FD241, FD245, AND FD250)

Ref	Part Number	Description	Qty	Serial Number
1	273637	BRACKET – CYLINDER MOUNT	1	
2	273284	CYLINDER – FORE AFT	1	
	313964	SEAL KIT		
3	228322	SHAFT – TAIL MACHINED	1	
4	273309	SHIELD – LH REEL TAIL END	1	
5	311632	DISC – WELDMENT	1	
6	273772	TAIL END REEL SUPPORT – C/W CUPS [201]	1	
7	164215	BEARING – CUP ROLLER	2	
8	18671	FITTING – LUBE 1/4 - 28 UNF	1	
9	164216	BEARING – CONE C/W SEAL	2	
10	311359	PLATE – STOP REEL	1	
11	273831	PAD – REEL DRIVE WEAR	3	
12	273777	PAD – REEL DRIVE WEAR	2	
13	30520	CAP – DUST	1	
14	19958	PIN – CLEVIS	1	
15	103879	PIN – CLEVIS	1	
16	18607	PIN – COTTER 5/32 DIA X 1.5 ZP	2	
17	18605	PIN – COTTER 1/8 DIA X 1 ZP	1	
18	320207	RING – SPLIT	1	
A	136143	BOLT – HEX HD TFL M16 X 2 X 30-10.9-AA1J		
B	152730	BOLT – HEX HD TFL M12 X 1.75 X 35-10.9-AA1J		
C	191489	BOLT – RHSSN TFL M8 X 1.25 X 16-8.8-AA1J		
D	135337	NUT – HEX FLG CTR LK M8 X 1.25-8-AA1J		
E	136485	BOLT – HEX FLG HD TFL M8 X 1.25 X 16-8.8-AA1J		
F	16235	WASHER – FLAT		
G	136445	NUT – HEX SLTD FINE M20 X 1.5-SPCL-22HA-ZINC		

201. The tail end reel support includes lube fitting (MD #18671) and two cup roller bearings (MD #164215).

51 Reel – Drive, Right Arm, Single Reel

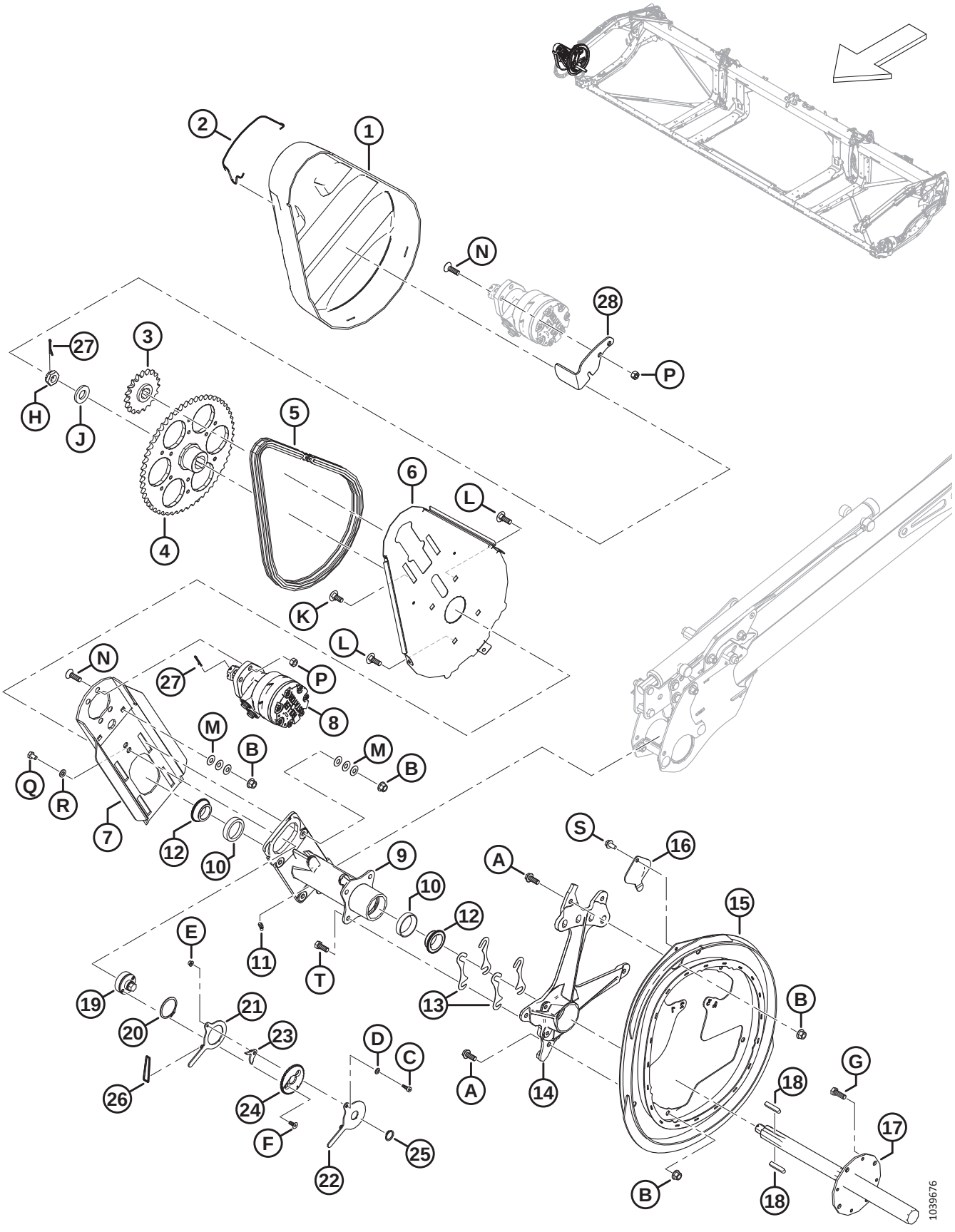

REEL – DRIVE, RIGHT ARM, SINGLE REEL

Ref	Part Number	Description	Qty	Serial Number
1	228614	COVER – REEL DRIVE SR	1	
2	228611	SPRING – REEL DRIVE COVER	1	
3	273875	SPROCKET – RC 60, 19 TOOTH	1	
4	228299	SPROCKET – MACHINING 56 TOOTH	1	
5	273907	CHAIN – RC 60 ENDLESS 76 LINKS	1	
	273963	CHAIN – RC C/W CONNECTOR 76 LINKS	OPT	
6	228604	SUPPORT – REEL DRIVE BACKPLATE	1	
7	360144	PLATE – MOTOR MOUNT W/ GRAPHITE	1	
8	273258	MOTOR – HYD-15.9 CU.IN. 506 SERIES [202]	1	
	273259	SEAL KIT [203]		
	273078	MOTOR – HYD-260 CC HIGH CAPACITY BEARING [204]	OPT	
	311620	SEAL KIT [205]		
	137375	NUT – SLTD JAM 1.0-20 UNEF		
9	273758	HUB – REEL DRIVE [206]	1	
10	164214	BEARING – CUP	2	
11	21301	FITTING – LUBRICATION	1	
12	164213	BEARING – CONE C/W SEAL	2	
13	164061	SHIM – HUB TO CAM	4	
14	228292	SUPPORT – CAM MACHINING	1	
15	273926	CAM – WELDMENT	1	
16	137476	COVER – CAM BEARING ACCESS	1	
17	228301	SHAFT – REEL DRIVE MACHINED	1	
18	137721	KEY – REEL DRIVE SHAFT	2	
19	228460	TIGHTENER – CHAIN	1	
20	111521	RING – RETAINING	1	
21	228478	ARM – INNER	1	
22	228479	ARM – OUTER	1	
23	228485	LATCH	1	
24	228477	DISC – LOCK	1	
25	191353	RING – RETAINING EXTERNAL	1	
26	136882	O-RING – 3.5 X 40.5	1	
27	18607	PIN – COTTER 5/32 DIA X 1.5 ZP	2	
28	360186	RETAINER – COVER	1	

202. Standard factory-installed motor.
203. Seal kit for standard motor (273258).
204. Optional high capacity motor for high reel loads.
205. Seal kit for optional high capacity motor (273078).
206. Hub includes two cup bearings (MD #164214) and lubrication fitting (MD #21301).

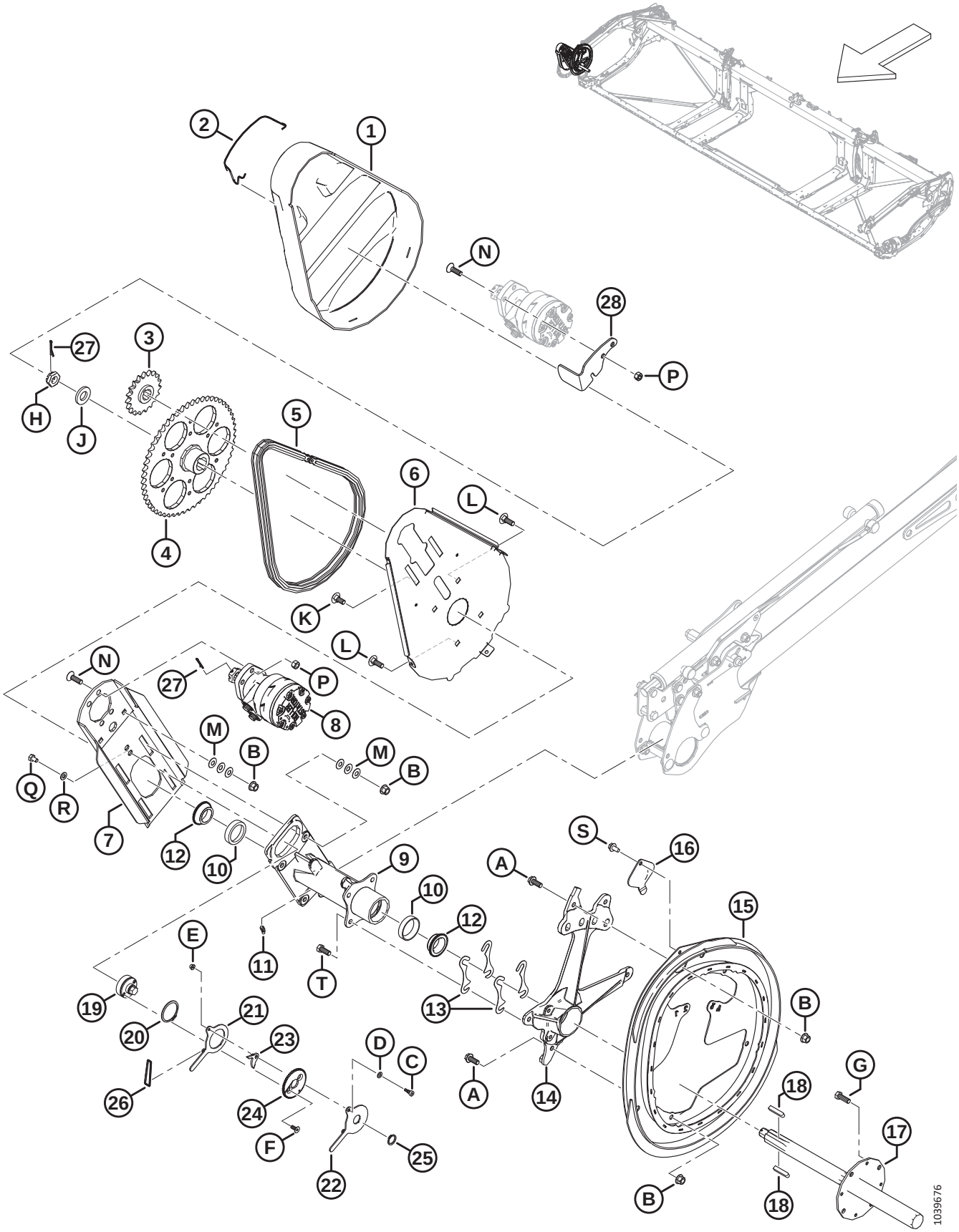
1
2
3
4
5
6
7
8
9
10
11
12
13
14
15
16
17
18
19
20
21
22
23
24
25
26
27
28
A
B
C
D
E
F
G
H
J
K
L
M
N
P
Q
R
S
T
1039676

REEL – DRIVE, RIGHT ARM, SINGLE REEL

Ref	Part Number	Description	Qty	Serial Number
A	320180	BOLT – HEX FLG HD M12 X 1.75 X 30-SPCL-8.8-AA1J		
B	136431	NUT – HEX FLG CTR LOC M12 X 1.75-10		
C	197135	SCREW – HEX SOC HD SHLDR M8 X 10		
D	184708	WASHER – FLAT M8-200HV-AA1J		
E	152668	NUT – HEX FLG CTR LOC M6 X 1-8		
F	136592	SCREW – HEX SOC CSK HD TFL M8 X 1.25 X 20-8.8-ZINC		
G	152730	BOLT – HEX HD TFL M12 X 1.75 X 35-10.9-AA1J		
H	136446	NUT – HEX SLTD FINE M24 X 1.5-SPCL-22HA-ZINC		
J	31774	WASHER – FLAT 1-1/8-30HRC-AC0C		
K	184667	BOLT – RHSN M12 X 1.75 X 30-8.8-ZINC		
L	136291	BOLT – RHSN TFL M12 X 1.75 X 35-8.8-ZINC		
M	136702	WASHER – CON SPRING M12-ZINC		
N	136401	SCREW – CSK HEX SOC M12 X 1.75 X 40-10.9-AA1J		
P	136759	NUT – HEX CTR LOC M12 X 1.75-8-AA1J		
Q	136842	BOLT – HEX HD TFL M10 X 1.5 X 16-8.8-ZINC		
R	30655	WASHER – HARD M10-340HV-AB0C		
S	136209	SCREW – HEX WSHR M10 X 1.5X20-450HV		
T	30630	BOLT – HEX HD TFL M12 X 1.75 X 30-8.8-A3L		

52 Reel – Drive, Center Arm, Double and Triple Reel

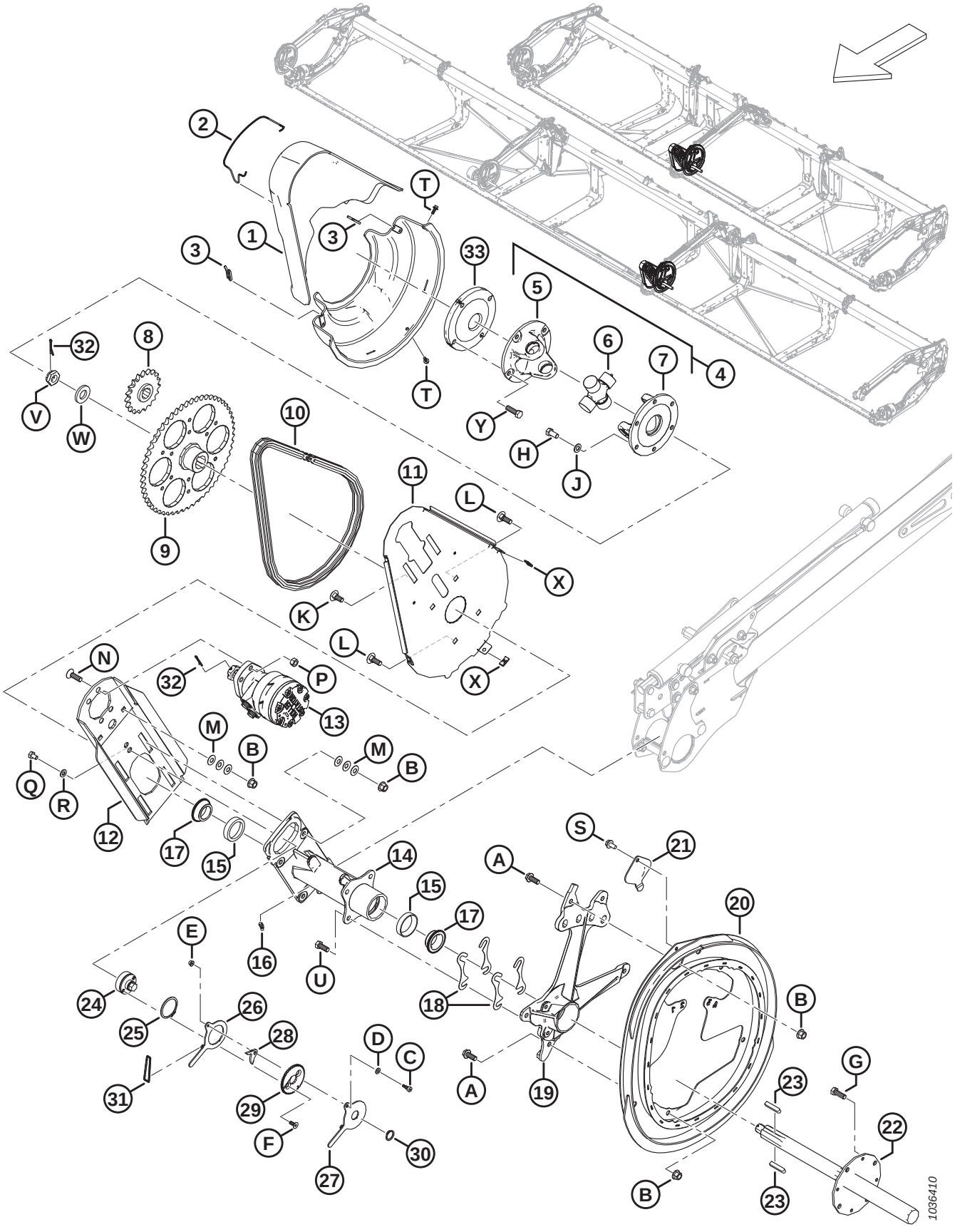

Ref	Part Number	Description	Qty	Serial Number
1	228619	COVER SET – CENTER REEL DRIVE [207]	1	
2	228611	SPRING – REEL DRIVE COVER	1	
3	228848	CLIP – COVER DUAL REEL DRIVE	2	
4	228382	REEL DRIVE U-JOINT [208]	1	
5	228384	YOKE – FLANGE 4 BOLT	1	
6	137825	CROSS JOURNAL ASSEMBLY	1	
7	228385	YOKE – FLANGE 6 BOLT	1	
8	273875	SPROCKET – RC 60, 19 TOOTH	1	
9	228299	SPROCKET – MACHINING 56 TOOTH	1	
10	273907	CHAIN – RC 60 ENDLESS 76 LINKS	1	
	273963	CHAIN – RC C/W CONNECTOR 76 LINKS	OPT	
11	228604	SUPPORT – REEL DRIVE BACKPLATE	1	
12	340216	PLATE – MOTOR MOUNT W/ GRAPHITE	1	
13	273258	MOTOR – HYD-15.9 CU.IN. 506 SERIES [209]	1	
	273259	SEAL KIT [210]		
	273078	MOTOR – HYD-260 CC HIGH CAPACITY BEARING [211]	OPT	
	311620	SEAL KIT [212]		
	137375	NUT – SLTD JAM 1.0-20 UNEF		
14	273758	HUB – REEL DRIVE [213]	1	
15	164214	BEARING – CUP	2	
16	21301	FITTING – LUBRICATION	1	
17	164213	BEARING – CONE C/W SEAL	2	
18	164061	SHIM – HUB TO CAM	4	
19	228292	SUPPORT – CAM MACHINING	1	
20	273926	CAM – WELDMENT	1	
21	137476	COVER – CAM BEARING ACCESS	1	
22	228301	SHAFT – REEL DRIVE MACHINED	1	
23	137721	KEY – REEL DRIVE SHAFT	2	
24	228460	TIGHTENER – CHAIN	1	
25	111521	RING – RETAINING	1	
26	228478	ARM – INNER	1	
27	228479	ARM – OUTER	1	

207. Set includes upper and lower drive reel covers.
208. U-joint includes cross journal assembly (MD #137825), four bolt flange yoke (MD #228384), and six bolt flange yoke (MD #228385).
209. Standard factory-installed motor.
210. Seal kit for standard motor (MD #273258).
211. Optional high capacity motor for high reel loads.
212. Seal kit for optional high capacity motor (MD #273078).
213. Hub includes two cup bearings (MD #164214) and lubrication fitting (MD #21301).

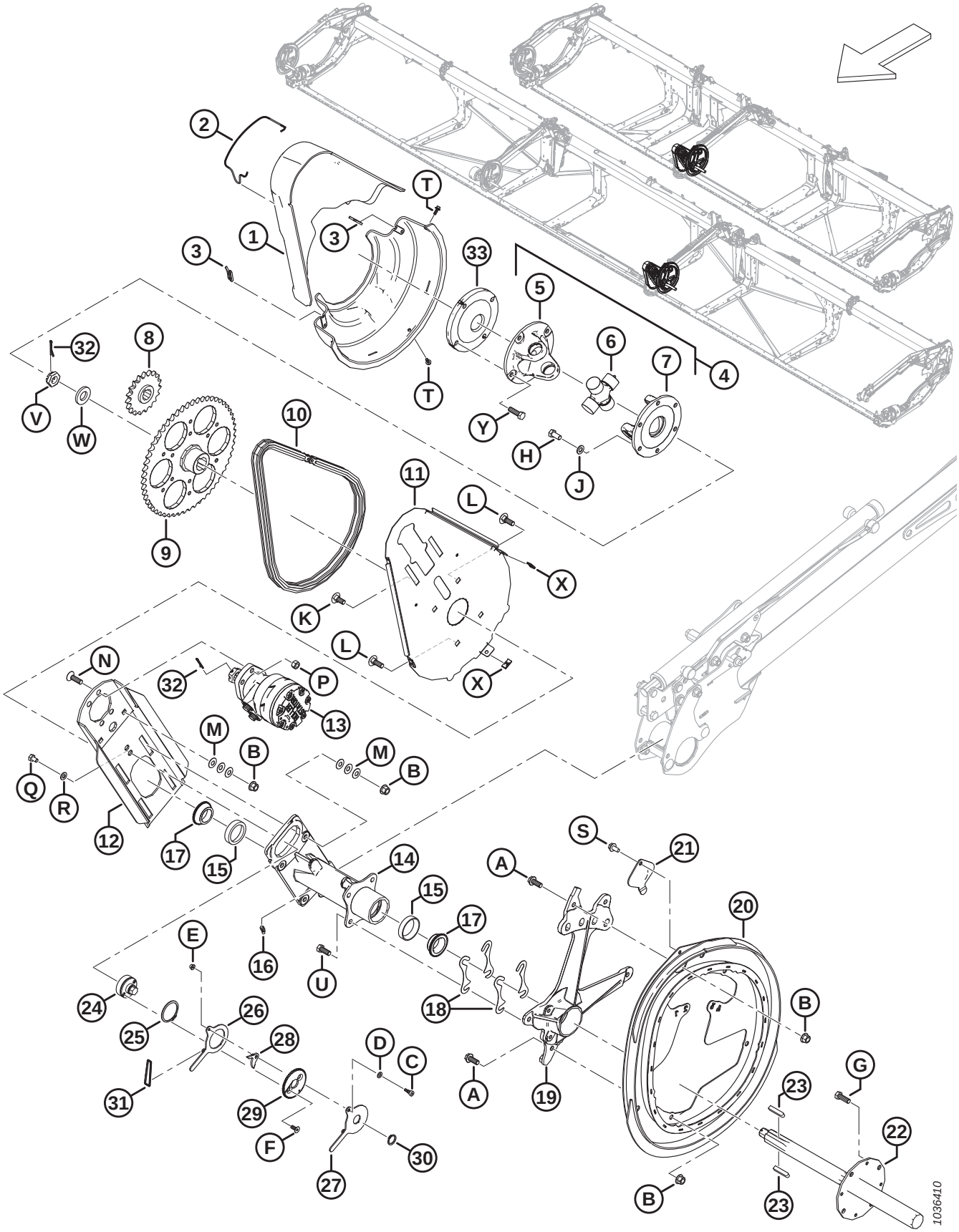
1036410

Ref	Part Number	Description	Qty	Serial Number
28	228485	LATCH	1	
29	228477	DISC – LOCK	1	
30	191353	RING – RETAINING EXTERNAL	1	
31	136882	O-RING – 3.5 X 40.5	1	
32	18607	PIN – COTTER 5/32 DIA X 1.5 ZP	2	
33	273576	DISC – SHIM TRIPLE REEL [214]	1	
A	320180	BOLT – HEX FLG HD M12 X 1.75 X 30-SPCL-8.8-AA1J		
B	136431	NUT – HEX FLG CTR LOC M12 X 1.75-10		
C	197135	SCREW – HEX SOC HD SHLDR M8 X 10		
D	184708	WASHER – FLAT M8-200HV-AA1J		
E	152668	NUT – HEX FLG CTR LOC M6 X 1-8		
F	136592	SCREW – HEX SOC CSK HD TFL M8 X 1.25 X 20-8.8-ZINC		
G	152730	BOLT – HEX HD TFL M12 X 1.75 X 35-10.9-AA1J		
H	50155	BOLT – HEX HD TFL M12 X 1.75 X 25-8.8-AA1J		
J	184714	WASHER – FLAT REG M12-300HV		
K	184667	BOLT – RHSN M12 X 1.75 X 30-8.8-ZINC		
L	136291	BOLT – RHSN TFL M12 X 1.75 X 35-8.8-ZINC		
M	136702	WASHER – CON SPRING M12-ZINC		
N	136401	SCREW – CSK HEX SOC M12 X 1.75 X 40-10.9-AA1J		
P	136759	NUT – HEX CTR LOC M12 X 1.75-8-AA1J		
Q	136842	BOLT – HEX HD TFL M10 X 1.5 X 16-8.8-ZINC		
R	30655	WASHER – HARD M10-340HV-AB0C		
S	136209	SCREW – HEX WSHR M10 X 1.5X20-450HV		
T	135959	BOLT – HEX FLG HD M6 X 1 X 16-10.9-AA1J		
U	30630	BOLT – HEX HD TFL M12 X 1.75 X 30-8.8-A3L		
V	136446	NUT – HEX SLTD FINE M24 X 1.5-SPCL-22HA-ZINC		
W	31774	WASHER – FLAT 1-1/8-30HRC-AC0C		
X	136443	NUT – SPRING "U" TYPE M6 X 1		
Y	152730	BOLT – HEX HD TFL M12 X 1.75 X 35-10.9-AA1J [215]		
	184669	BOLT – HEX HD M12 X 1.75 X 40-8.8-AA1J [214]		

214. Triple-reel headers only.
215. Double-reel headers only.

53 Reel – Cam Components, Right Arm

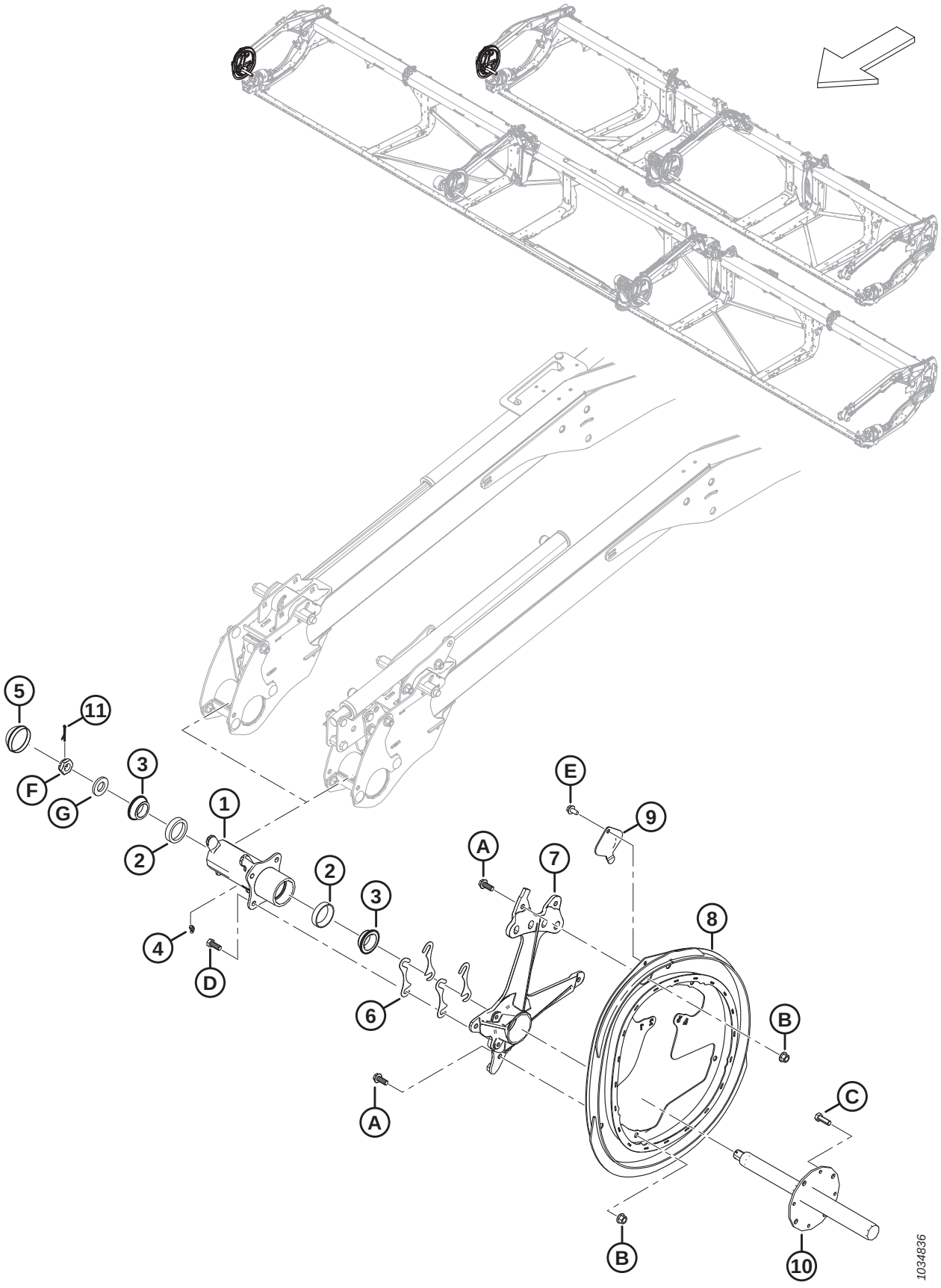

REEL – CAM COMPONENTS, RIGHT ARM

Ref	Part Number	Description	Qty	Serial Number
1	273759	HUB ASSEMBLY – RH CAM [216]	1	
2	164214	BEARING – CUP	2	
3	164213	BEARING – CONE C/W SEAL	2	
4	21301	FITTING – LUBRICATION	1	
5	140250	CAP – DUST	1	
6	164061	SHIM – HUB TO CAM	4	
7	228292	SUPPORT – CAM MACHINING	1	
8	273926	CAM – WELDMENT	1	
9	137476	COVER – CAM BEARING ACCESS	1	
10	228302	SHAFT – MACHINED RH REEL	1	
11	18607	PIN – COTTER 5/32 DIA X 1.5 ZP	1	
A	320180	BOLT – HEX FLG HD M12 X 1.75 X 30-SPCL-8.8-AA1J		
B	136431	NUT – HEX FLG CTR LOC M12 X 1.75-10		
C	152730	BOLT – HEX HD TFL M12 X 1.75 X 35-10.9-AA1J		
D	30630	BOLT – HEX HD TFL M12 X 1.75 X 30-8.8-A3L		
E	136209	SCREW – HEX WSHR M10 X 1.5 X 20-450HV		
F	136446	NUT – HEX SLTD FINE M24 X 1.5-SPCL-22HA-ZINC		
G	31774	WASHER – FLAT 1-1/8-30 HRC-AC0C		

216. The hub assembly includes two bearing cups (MD #164214) and lubrication fitting (MD #21301).

54 Reel – Cam Components, Center Right Arm, Triple Reel (FD240, FD245, and FD250)

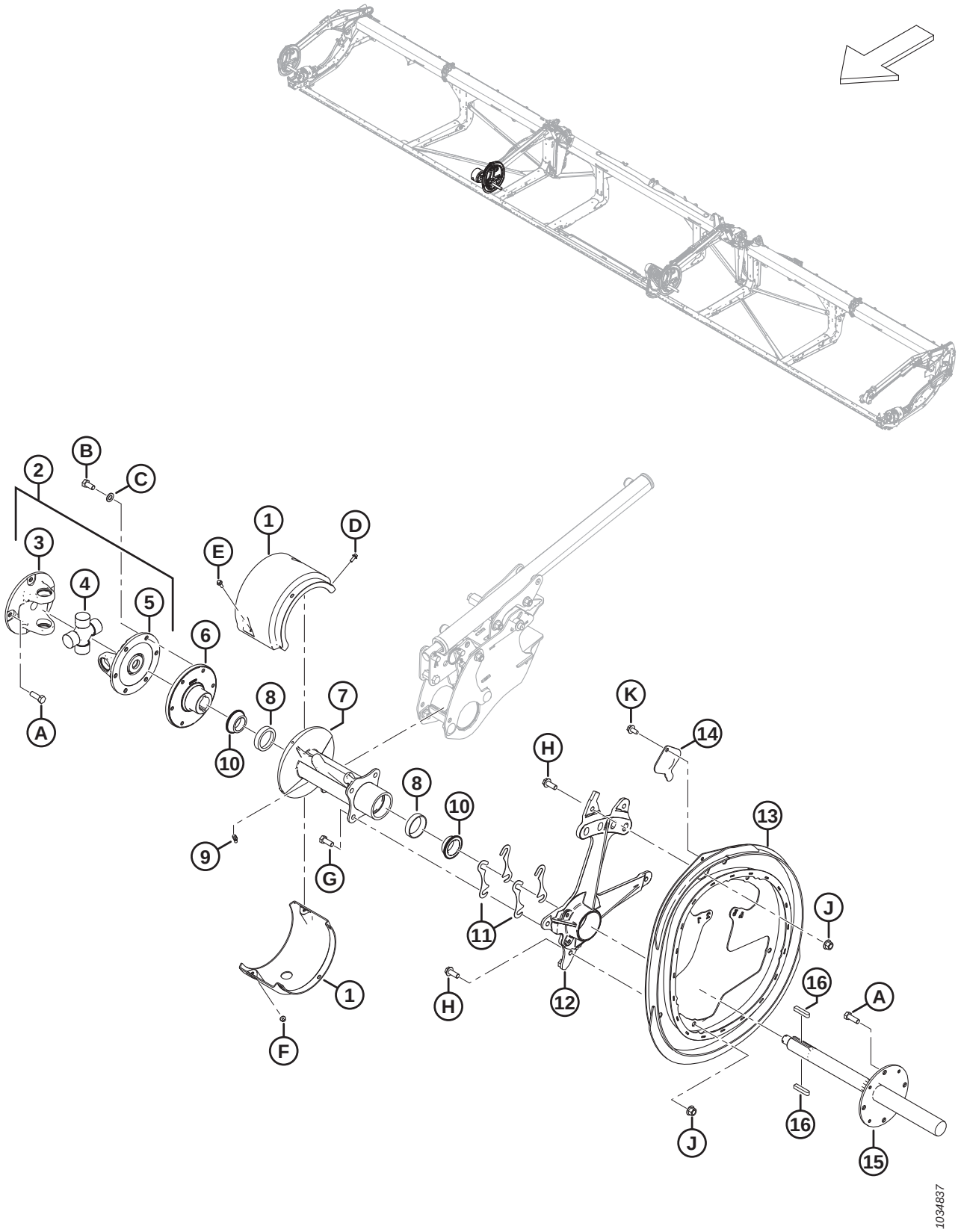

REEL – CAM COMPONENTS, CENTER RIGHT ARM, TRIPLE REEL (FD240, FD245, AND FD250)

Ref	Part Number	Description	Qty	Serial Number
1	311724	COVER SET – TRIPLE REEL [217]	1	
2	228382	REEL DRIVE U-JOINT [218]	1	
3	228384	YOKE – FLANGE 4 BOLT	1	
4	137825	CROSS JOURNAL ASSEMBLY	1	
5	228385	YOKE – FLANGE 6 BOLT	1	
6	273770	HUB – MACHINING U-JOINT MT-TR	1	
7	273760	HUB – TRC W/ BEARING CUPS [219]	1	
8	164214	BEARING – CUP	2	
9	21301	FITTING – LUBRICATION	1	
10	164213	BEARING – CONE C/W SEAL	2	
11	164061	SHIM – HUB TO CAM	4	
12	228292	SUPPORT – CAM MACHINING	1	
13	273926	CAM – WELDMENT	1	
14	137476	COVER – CAM BEARING ACCESS	1	
15	228301	SHAFT – REEL DRIVE MACHINED	1	
16	137721	KEY – REEL DRIVE SHAFT	2	
A	152730	BOLT – HEX HD TFL M12 X 1.75 X 35-10.9-AA1J		
B	50155	BOLT – HEX HD TFL M12 X 1.75 X 25-8.8-AA1J		
C	184714	WASHER – FLAT REG M12-300HV		
D	252639	BOLT – HEX FLG HD M6 X 1 X 16 X SPCL-8.8-AA2L		
E	136324	BOLT – HEX FLG HD TFL M6 X 1 X 20-10.9-AA1J		
F	152668	NUT – HEX FLG CTR LOC M6 X 1-8		
G	30630	BOLT – HEX HD TFL M12 X 1.75 X 30-8.8-A3L		
H	320180	BOLT – HEX FLG HD M12 X 1.75 X 30-SPCL-8.8-AA1J		
J	136431	NUT – HEX FLG CTR LOC M12 X 1.75-10		
K	136209	SCREW – HEX WSHR M10 X 1.5 X 20-450HV		

217. Set includes top and bottom triple-reel covers.
218. U-joint includes cross journal assembly (MD #137825), four bolt flange yoke (MD #228384), and six bolt flange yoke (MD #228385).
219. Hub includes two bearing cups (MD #164214) and lubrication fitting (MD #21301).

55 Reel – Tine Tube

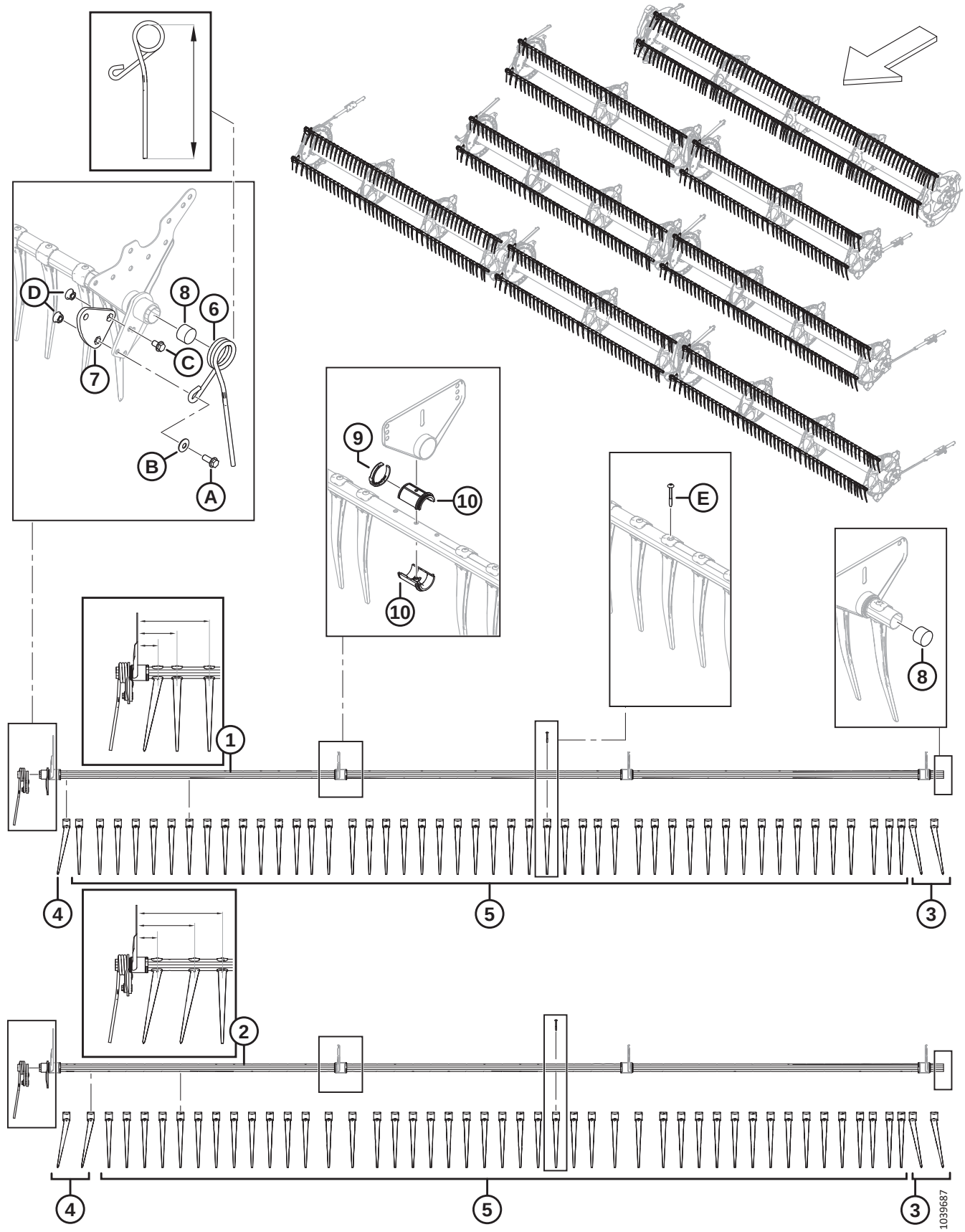

NOTE:

Finger configuration varies for narrow or wide and left, right, and center tine tubes.

Ref	Part Number	Description	Qty	Serial Number
1	360201	TINE TUBE WELDT – 25 FT SR NARROW [220]	3	
	311368	TINE TUBE WELDT – 30 FT DR NARROW [220]	6	
	311207	TINE TUBE WELDT – 35 FT DR NARROW [220]	6	
	311190	TINE TUBE WELDT – 40 FT DR NARROW [220]	6	
	311303	TINE TUBE WELDT – 41 FT DR NARROW [220]	6	
	311408	TINE TUBE WELDT – 40 FT TR AND 45 FT TR NARROW [220]	6	
	311745	TINE TUBE WELDT – 40 FT TR NARROW (CENTER) [220]	3	
	311675	TINE TUBE WELDT – 50 FT TR NARROW [220]	6	
	311408	TINE TUBE WELDT – 45 FT TR AND 50 FT TR NARROW (CENTER) [220]	3	
2	360199	TINE TUBE WELDT – 25 FT SR WIDE [220]	2	
	311365	TINE TUBE WELDT – 30 FT DR WIDE [220]	4	
	311210	TINE TUBE WELDT – 35 FT DR WIDE [220]	4	
	311193	TINE TUBE WELDT – 40 FT DR WIDE [220]	4	
	311306	TINE TUBE WELDT – 41 FT DR WIDE [220]	4	
	311405	TINE TUBE WELDT – 40 FT TR AND 45 FT TR WIDE [220]	4	
	311746	TINE TUBE WELDT – 40 FT TR WIDE (CENTER) [220]	2	
	311676	TINE TUBE WELDT – 50 FT TR WIDE [220]	4	
	311405	TINE TUBE WELDT – 45 FT TR AND 50 FT TR WIDE (CENTER) [220]	2	
3	360540	FINGER – PLASTIC, LH ANGLED (10 PACK)	A/R	
4	311523	FINGER – PLASTIC, RH ANGLED (10 PACK)	A/R	
5	174849	FINGER – PLASTIC, STRAIGHT (10 PACK) [221]		
6	311327	FINGER – CAM END BENT, LH REEL (315 MM LG) [222]	1	
	311325	FINGER – CAM END OUTBOARD, RH REEL (305 MM LG) [222]	1	

220. Narrow or wide tine tubes can be distinguished from the first three fingers of the RH side. Narrow tine tubes have one RH angled finger (MD #311523) followed by two straight fingers (MD #174849) and measure 76 mm, 146 mm, and 265 mm as illustrated. Wide tine tubes have two RH angled fingers (MD #311523) followed by one straight finger (MD #174849) and measure 76 mm, 214 mm, and 315 mm as illustrated.
221. Quantities per tine tube (LH/RH/Center): NARROW – FD230 = 40/41/0, FD235 = 47/48/0, FD240 DR = 55/56/0, FD240 TR = 40/41/26, FD241 = 56/57/0, FD245 = 40/41/41, and FD250 = 47/48/41. WIDE – FD230 = 37/38/0, FD235 = 44/45/0, FD240 DR = 51/52/0, FD240 TR = 37/38/23, FD241 = 52/54/0, FD245 = 37/38/38, and FD250 = 44/45/38. Quantities per tine tube (single reel): NARROW – FD225 = 70. WIDE – FD225 = 71.
222. There are two lengths of finger that can be ordered. The finger at the RH side of the reel is shorter than fingers at the center of the header. The correct finger must be installed in the correct position to prevent damage. Determine the proper length (315 or 305 mm) of a finger by measuring the finger from the inside top loop to the finger tip as shown in illustration.

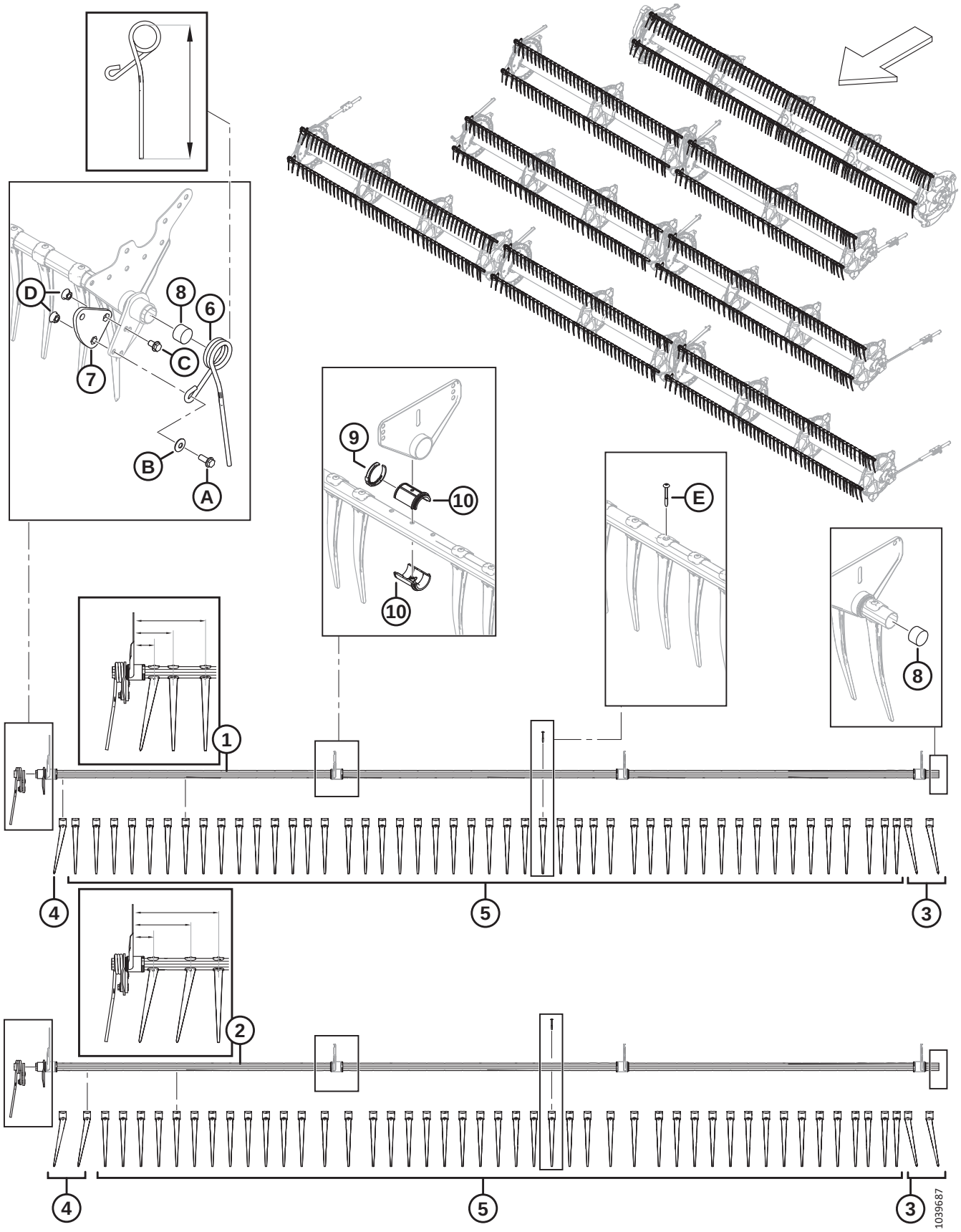
D
8
6
C
7
B
A
9
10
10
E
8
1
4
5
3
2
4
5
3
1039687

REEL – TINE TUBE

Ref	Part Number	Description	Qty	Serial Number
7	228319	ARM – CRANK MACHINING (SR, DR) [223]	1	
	273877	ARM – CRANK MACHINING (TR) [224]	1	
8	137980	PLUG – TINE TUBE	2	
9	220941	CLAMP – TINE TUBE BUSHING, CENTER RIB (5 PACK)	A/R	
10	220939	TINE TUBE BUSHING (25 PACK)	A/R	
A	320192	BOLT – HEX FLG HD M12 X 1.75 X 30-SPCL-8.8-AA1J		
B	184597	WASHER – CON SPRING M12-AA1J [225]		
C	320187	BOLT – HEX FLG HD M12 X 1.75 X 20-SPCL-8.8-AA1J		
D	184697	NUT – HEX SER FLG M12 X 1.75-8-AA1J		
E	252687	SCREW – 48° PLASTITE TWIN HELIX		

223. Steel with three holes; for single- and double-reel headers only.
224. Aluminum with four holes; for triple-reel headers only.
225. Be sure to note the orientation of washer (MD #184597). The concave (inward facing) surface of the washer should be installed facing away from the tine tube crank arm assembly.

56 Reel Discs – Cam End and Linkage (FD225, FD230, FD235, FD240, FD241, FD245, and FD250)

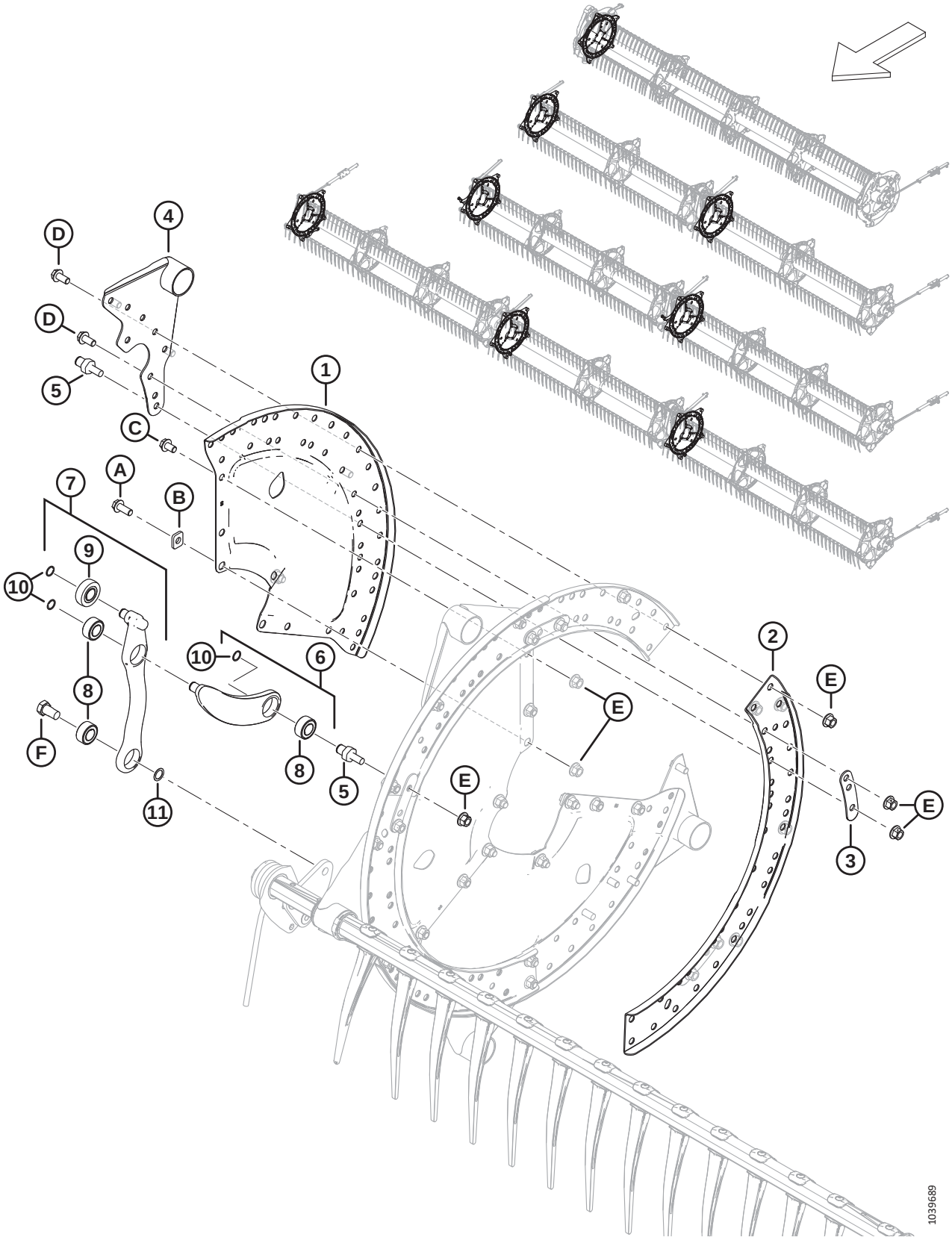

Ref	Part Number	Description	Qty	Serial Number
1	273373	SECTOR – CAM END	3	
2	273376	CHANNEL – CAM DISC	3	
3	311672	STRAP	5	
4	335924	ARM WELDT – CAM END	5	
5	340146	STUD (FOR LINKAGE)	5	
6	311615	ARM – ASSEMBLY [226]	5	
7	311617	ARM – TINE CONTROL ASSY [227]	5	
8	273347	BEARING	A/R	
9	273524	BEARING – CAM FOLLOWER	A/R	
10	273536	RING – RETAINING	10	
11	137529	SHIM – CRANK BEARING		
A	320180	BOLT – HEX FLG HD M12 X 1.75 X 30-SPCL-8.8-AA1J		
B	273666	WASHER		
C	320179	BOLT – HEX FLG HD TFL M12 X 1.75 X 20-SPCL-8.8-AA1J		
D	320175	BOLT – HEX FLG HD TFL M12 X 1.75 X 25-SPCL-8.8-AA1J		
E	136431	NUT – HEX FLG CTR LOC M12 X 1.75-10		
F	228316	BOLT – HEX HD M16 X 1.5 X 15-SPCL-8.8-AA1J		

226. The arm assembly includes arm (NSS), bearing (MD #273347), and retaining ring (MD #273536).
227. The tine control assembly includes arm (NSS), cam follower bearing (MD #273524), two bearings (MD #273347), and retaining ring (MD #273536).

57 Reel Discs – Mid Span, Cam Side (FD225, FD235, FD240, FD241, FD245, and FD250)

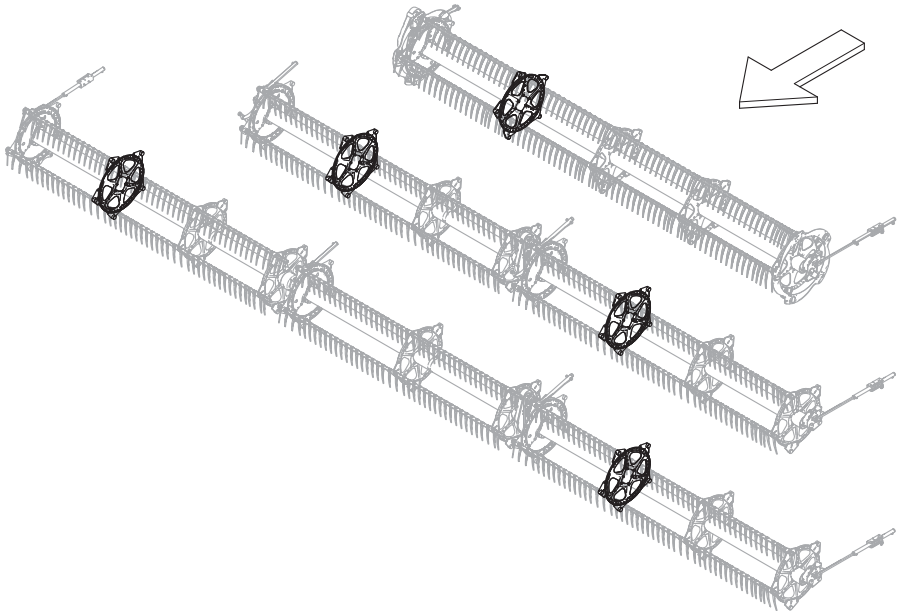

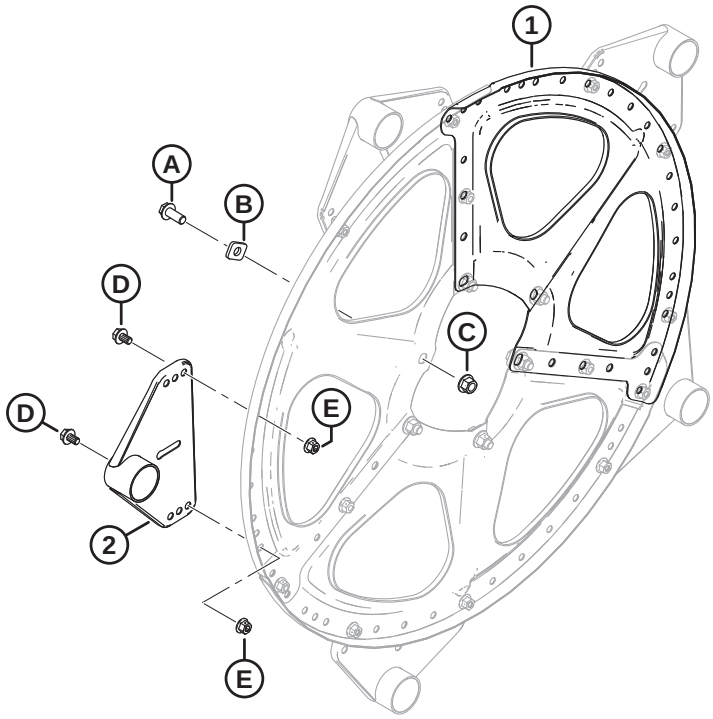

1039691

REEL DISCS – MID SPAN, CAM SIDE (FD225, FD235, FD240, FD241, FD245, AND FD250)

Ref	Part Number	Description	Qty	Serial Number
1	273375	SECTOR – MID SPAN AND TAIL END	3	
2	273523	ARM WELDT – MID SPAN	5	
A	320180	BOLT – HEX FLG HD M12 X 1.75 X 30-SPCL-8.8-AA1J		
B	273666	WASHER		
C	136431	NUT – HEX FLG CTR LOC M12 X 1.75-10		
D	136151	BOLT – HEX FLG HD TFL M10 X 1.5 X 16-8.8-AA1J		
E	135799	NUT – HEX FLG CTR LOC M10 X 1.5-10		

58 Reel Discs – Mid Span, Tail Side (FD225, FD230, FD235, FD240, FD241, FD245, and FD250)

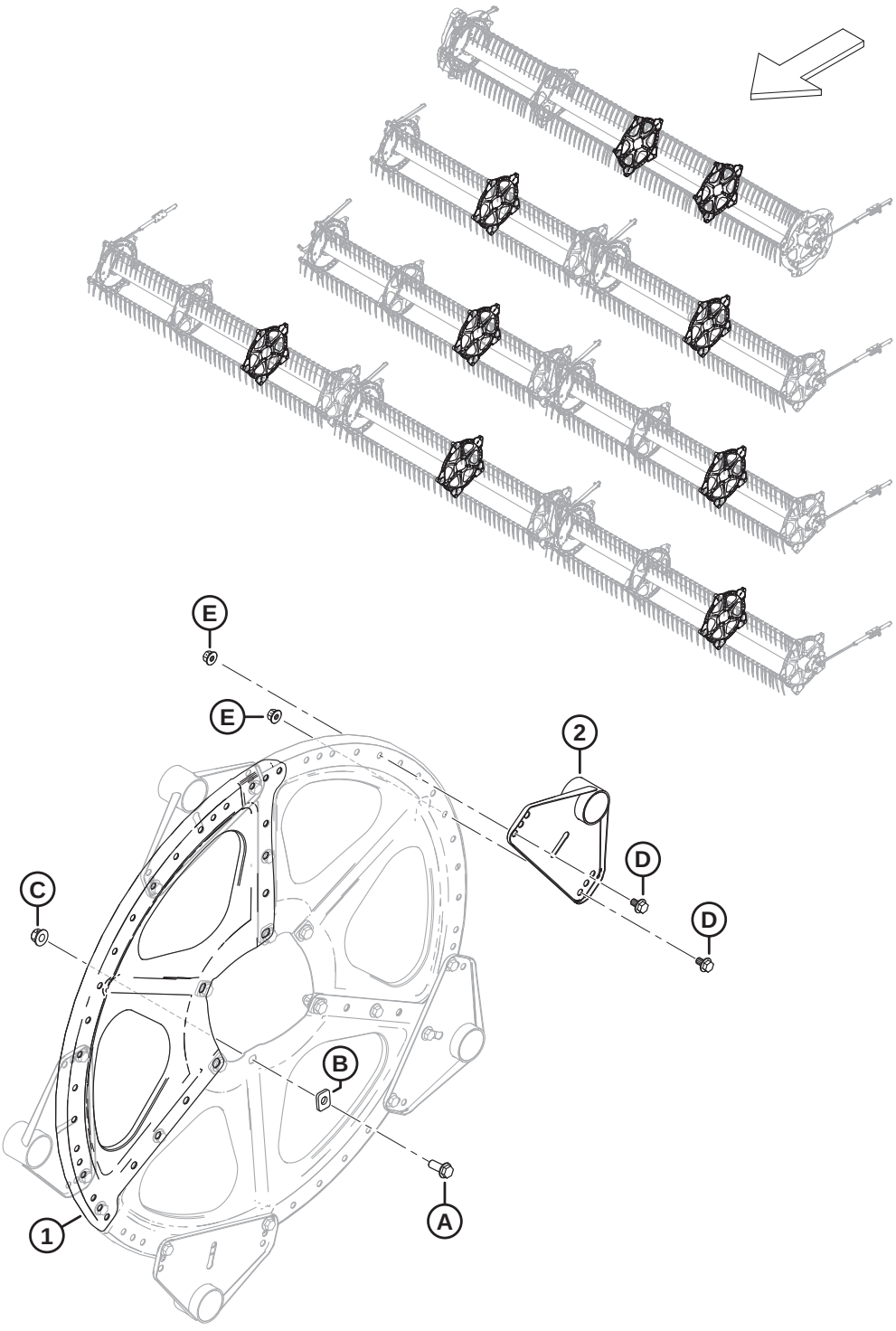

REEL DISCS – MID SPAN, TAIL SIDE (FD225, FD230, FD235, FD240, FD241, FD245, AND FD250)

Ref	Part Number	Description	Qty	Serial Number
1	273375	SECTOR – MID SPAN AND TAIL END	3	
2	273523	ARM WELDT – MID SPAN	5	
A	320180	BOLT – HEX FLG HD M12 X 1.75 X 30-SPCL-8.8-AA1J		
B	273666	WASHER		
C	136431	NUT – HEX FLG CTR LOC M12 X 1.75-10		
D	136151	BOLT – HEX FLG HD TFL M10 X 1.5 X 16-8.8-AA1J		
E	135799	NUT – HEX FLG CTR LOC M10 X 1.5-10		

59 Reel Discs – Tail End (FD225, FD230, FD235, FD240, FD241, FD245, and FD250)

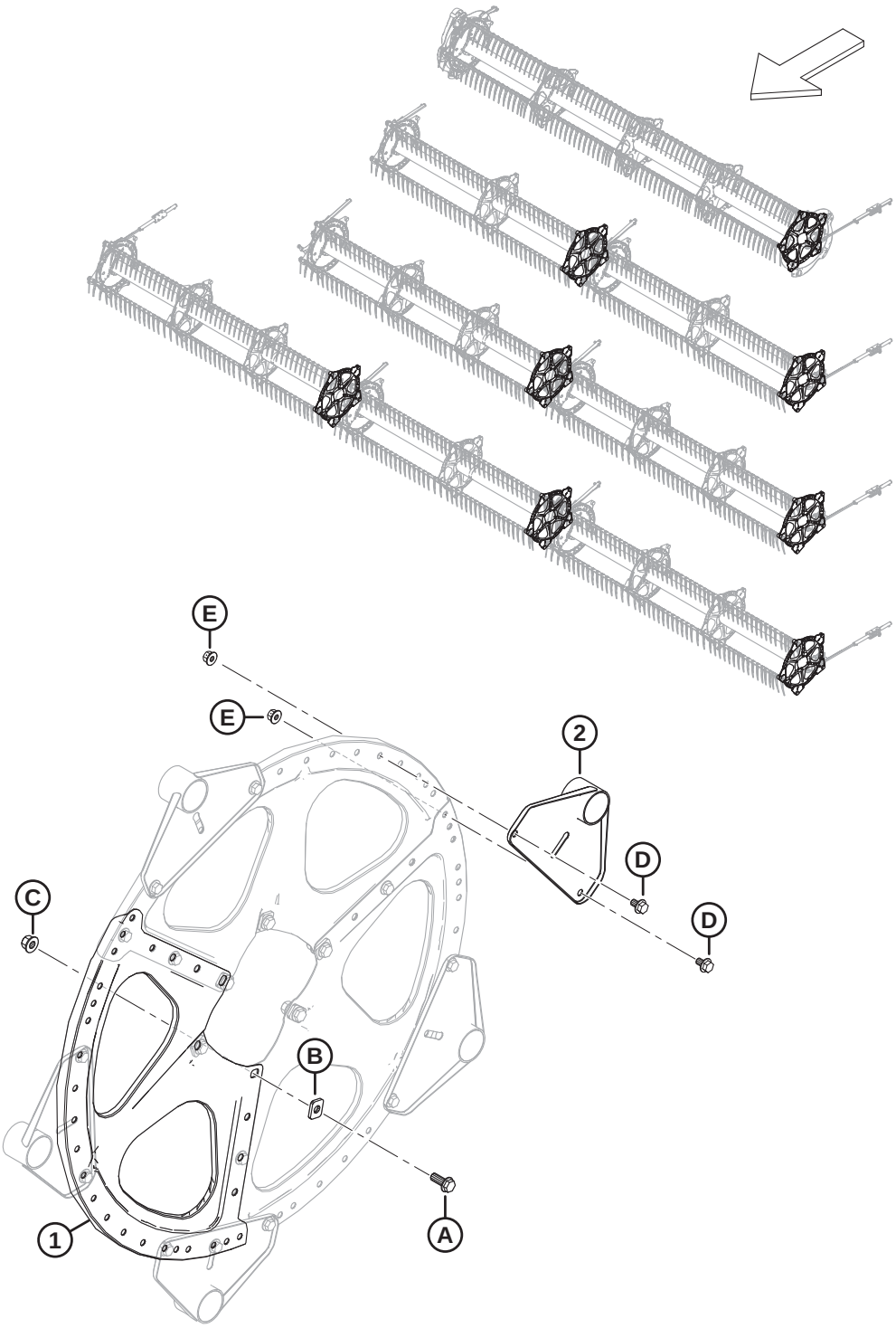

REEL DISCS – TAIL END (FD225, FD230, FD235, FD240, FD241, FD245, AND FD250)

Ref	Part Number	Description	Qty	Serial Number
1	273375	SECTOR – MID SPAN AND TAIL END	3	
2	311347	ARM WELDT – TAIL END	5	
A	320180	BOLT – HEX FLG HD M12 X 1.75 X 30-SPCL-8.8-AA1J		
B	273666	WASHER		
C	136431	NUT – HEX FLG CTR LOC M12 X 1.75-10		
D	136151	BOLT – HEX FLG HD TFL M10 X 1.5 X 16-8.8-AA1J		
E	135799	NUT – HEX FLG CTR LOC M10 X 1.5-10		

60 Reel – Center Tubes, Single Reel

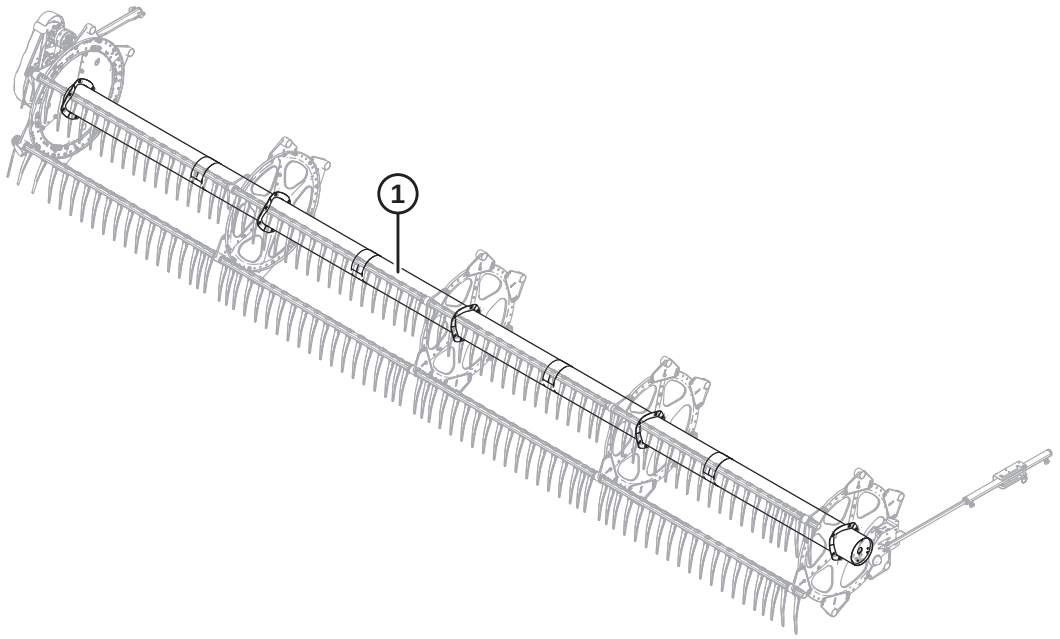

1039380

Ref	Part Number	Description	Qty	Serial Number
1	360376	CENTER TUBE – W/ DECALS, 25 FT (AMBER, RED-ORANGE DECALS) [228]	1	

228. FD225 single reel.

61 Reel – Center Tubes, Double Reel

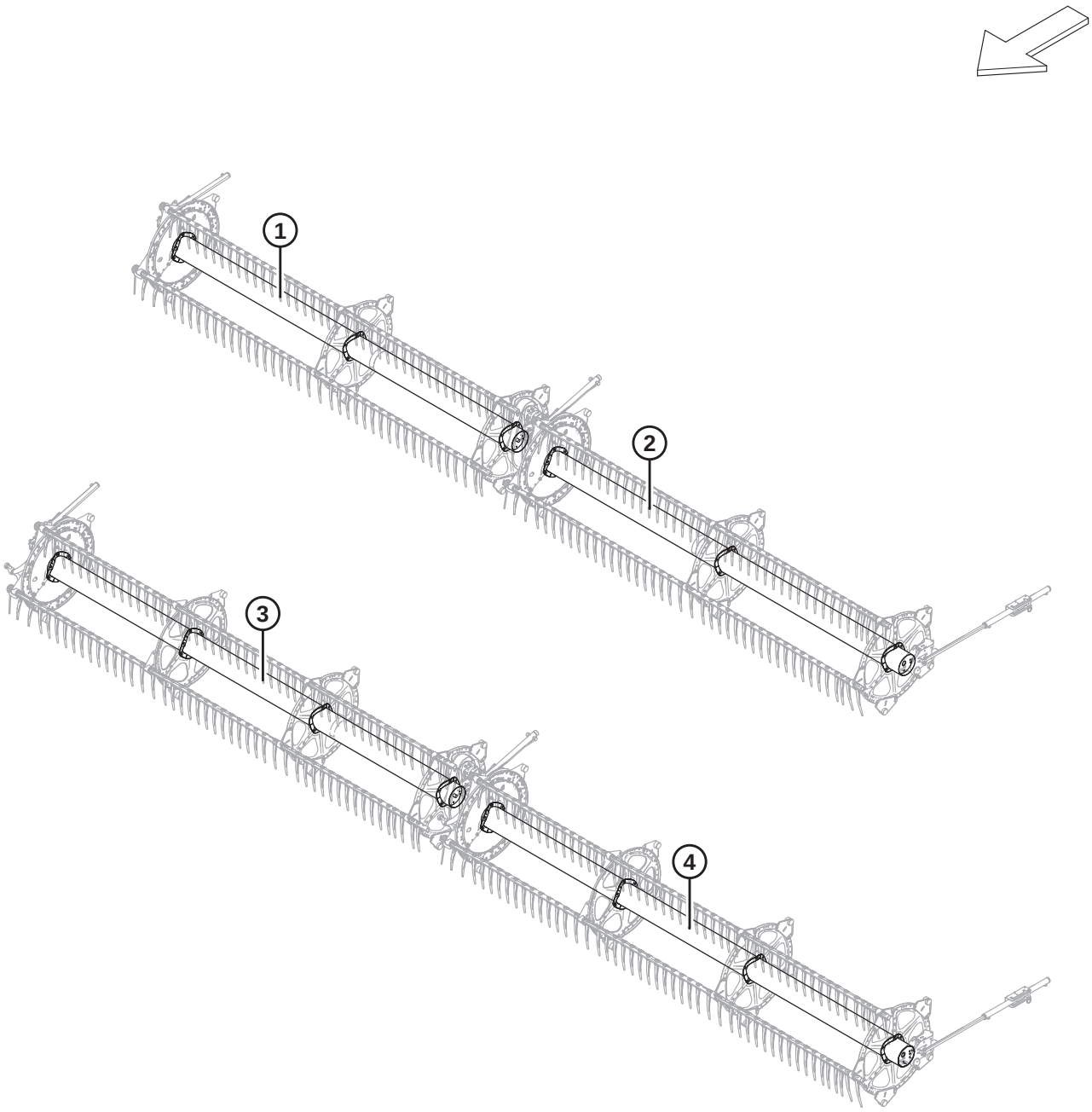

1038508

Ref	Part Number	Description	Qty	Serial Number
1	311644	CENTER TUBE – W/ DECALS, 30 FT (AMBER, RED-ORANGE DECALS) [229]	1	
2	311643	CENTER TUBE – W/ DECALS, 30 FT (AMBER, RED-ORANGE DECALS) [230]	1	
3	311646	CENTER TUBE – W/ DECALS, 35 FT (AMBER, RED-ORANGE DECALS) [231]	1	
	311195	CENTER TUBE – W/ DECALS, 40 FT (AMBER DECALS) [232]	1	
	311648	CENTER TUBE – W/ DECALS, 41 FT (AMBER, RED-ORANGE DECALS) [233]	1	
4	311645	CENTER TUBE – W/ DECALS, 35 FT (AMBER, RED-ORANGE DECALS) [234]	1	
	311658	CENTER TUBE – W/ DECALS, 40 FT (AMBER, RED-ORANGE DECALS) [235]	1	
	311647	CENTER TUBE – W/ DECALS, 41 FT (AMBER, RED-ORANGE DECALS) [236]	1	

229. FD230 RH double reel.
230. FD230 LH double reel.
231. FD235 RH double reel.
232. FD240 RH double reel.
233. FD241 RH double reel.
234. FD235 LH double reel.
235. FD240 LH double reel.
236. FD241 LH double reel.

62 Reel – Center Tubes, Triple Reel

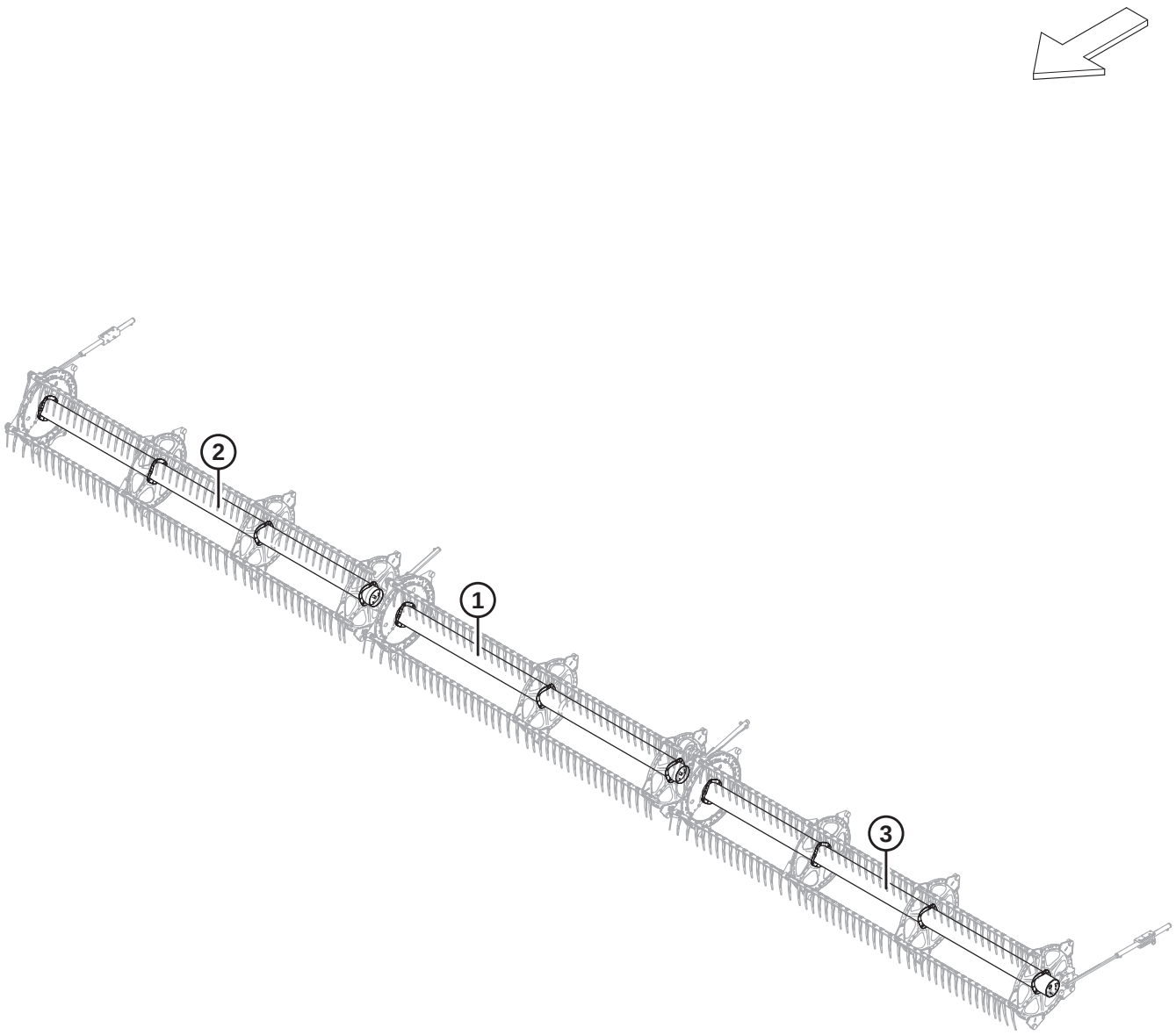

1038505

Ref	Part Number	Description	Qty	Serial Number
1	311644	CENTER TUBE – W/ DECALS, 45 AND 50 FT (AMBER, RED-ORANGE DECALS) [237]	1	
	311038	CENTER TUBE – W/ DECALS, 40 FT (AMBER DECALS) [238]	1	
2	311646	CENTER TUBE – W/ DECALS, 50 FT (AMBER, RED-ORANGE DECALS) [239]	1	
	311644	CENTER TUBE – W/ DECALS, 40 AND 45 FT (AMBER, RED-ORANGE DECALS) [240]	1	
3	311645	CENTER TUBE – W/ DECALS, 50 FT (AMBER, RED-ORANGE DECALS) [241]	1	
	311643	CENTER TUBE – W/ DECALS, 40 AND 45 FT (AMBER, RED-ORANGE DECALS) [242]	1	

237. FD245 and FD250 center triple reel.
238. FD240 center triple reel.
239. FD250 RH triple reel.
240. FD240 RH triple reel and FD245 RH triple reel.
241. FD250 LH triple reel.
242. FD240 LH triple reel and FD245 LH triple reel.

63 Reel – Endshields, Cam End, Inboard

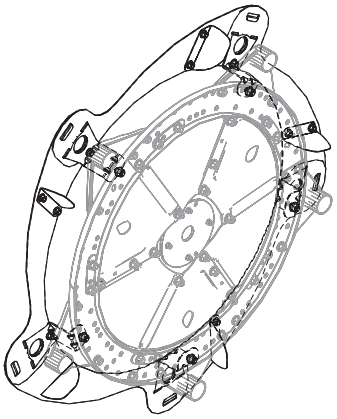

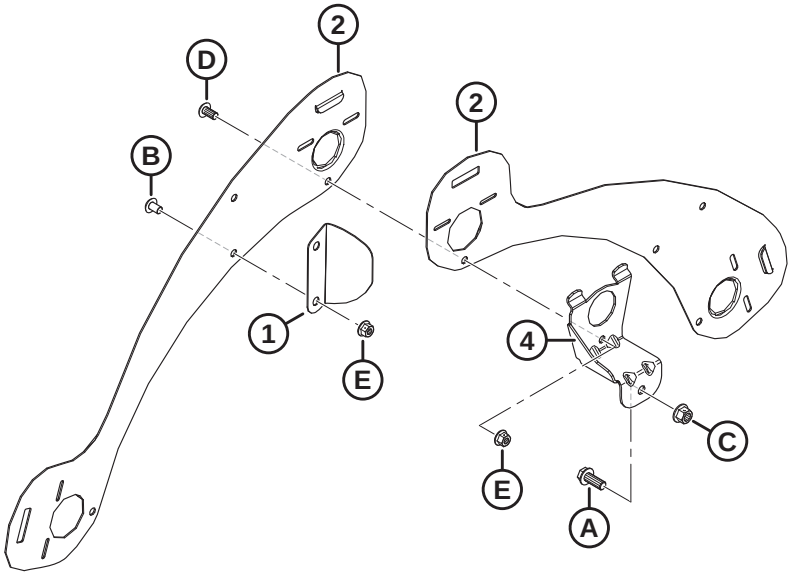

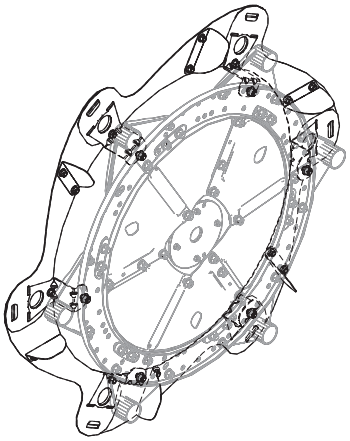

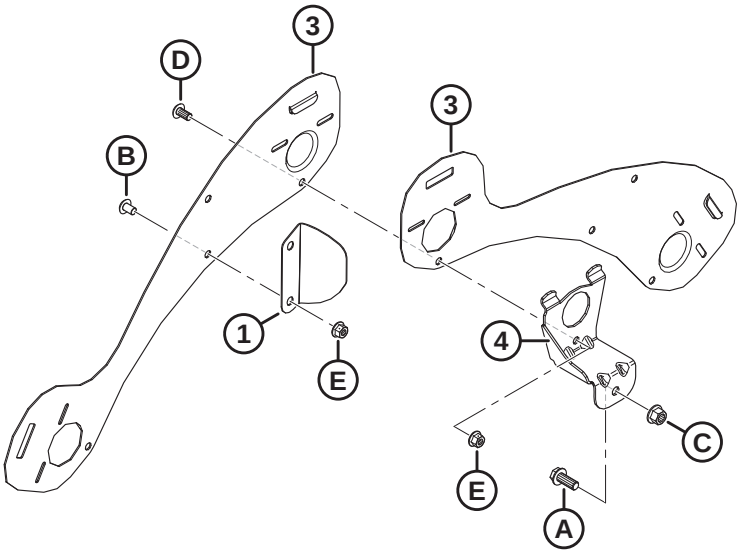

1036485

NOTE:

Top illustration shows 5 bat; bottom illustration shows 6 bat.

Ref	Part Number	Description	Qty	Serial Number
1	311906	DEFLECTOR – CAM INBOARD [243]		
2	273823	SHIELD – 5 BAT LH REEL CAM END	5	
3	273813	SHIELD – 6 BAT LH REEL CAM END	6	
4	311964	SUPPORT – WELDT CAM END [243]		
A	320180	BOLT – HEX FLG HD M12 X 1.75 X 30-SPCL-8.8-ZINC		
B	136640	SCREW – TORX TRUSS HD M10 X 1.5 X 16 X SPCL-8.8-AA1J		
C	136431	NUT – HEX FLG CTR LOC M12 X 1.75-10		
D	136395	SCREW – TORX TRUSS HD M10 X 1.5 X 20 X SPCL-8.8-A3L		
E	135799	NUT – HEX FLG CTR LOC M10 X 1.5-10		

243. Quantities: 5 bat = 5, 6 bat = 6.

64 Reel – Endshields, Cam End, Outboard

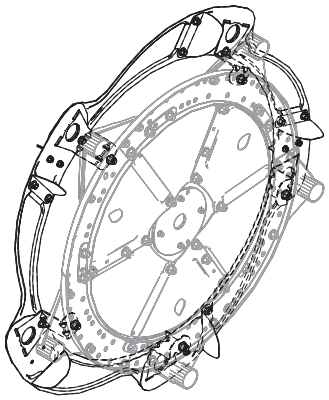

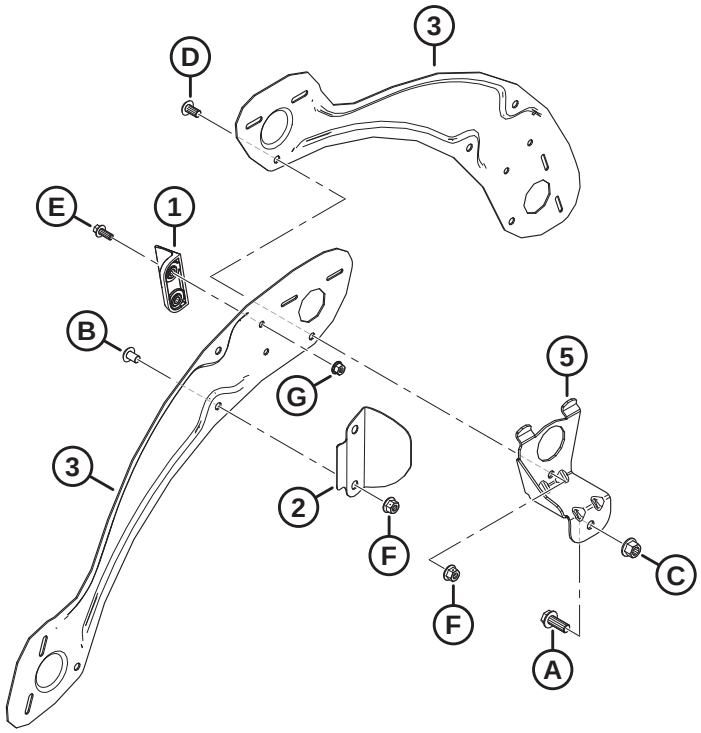

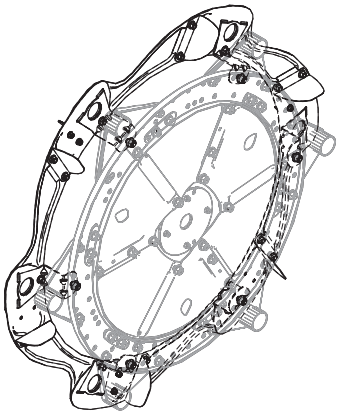

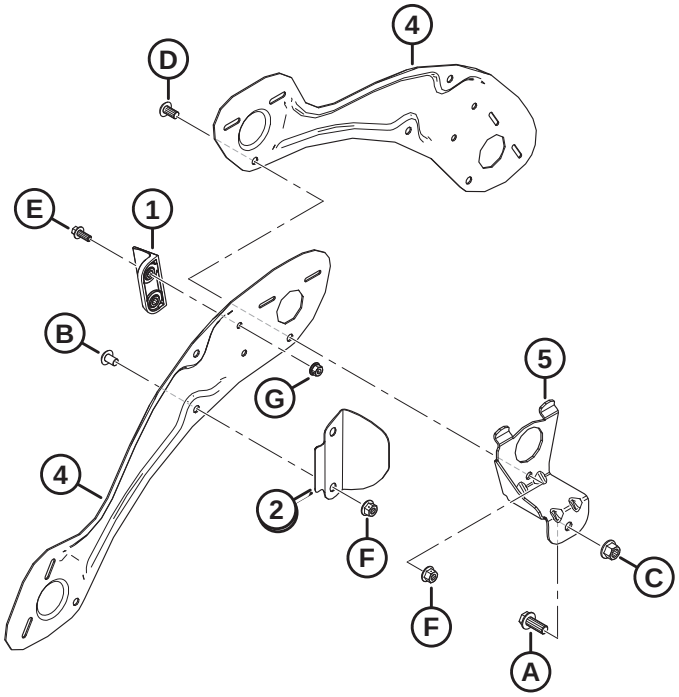

1036486

NOTE:

Top illustration shows 5 bat; bottom illustration shows 6 bat.

Ref	Part Number	Description	Qty	Serial Number
1	313035	PADDLE – REEL END, HYTREL	3	
2	311729	DEFLECTOR – CAM OUTBOARD [244]		
3	311694	SHIELD – OUTBOARD RH 5 BAT	5	
4	311752	SHIELD – OUTBOARD RH 6 BAT	6	
5	311964	SUPPORT – WELDT CAM END [244]		
A	320180	BOLT – HEX FLG HD M12 X 1.75 X 30-SPCL-8.8-ZINC		
B	136640	SCREW – TORX TRUSS HD M10 X 1.5 X 16 X SPCL-8.8-AA1J		
C	136431	NUT – HEX FLG CTR LOC M12 X 1.75-10		
D	136395	SCREW – TORX TRUSS HD M10 X 1.5 X 20 X SPCL-8.8-A3L		
E	136300	BOLT – HEX FLG HD TFL M8 X 1.25 X 20-8.8-AA3L		
F	135799	NUT – HEX FLG CTR LOC M10 X 1.5-10		
G	135337	NUT – HEX FLG CTR LK M8 X 1.25-8-AA1J		

244. Quantities: 5 bat = 5, 6 bat = 6.

65 Reel – Endshields, Tail End, Inboard

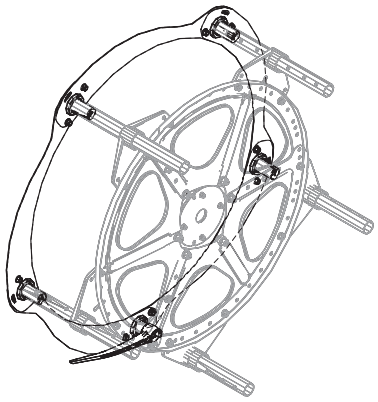

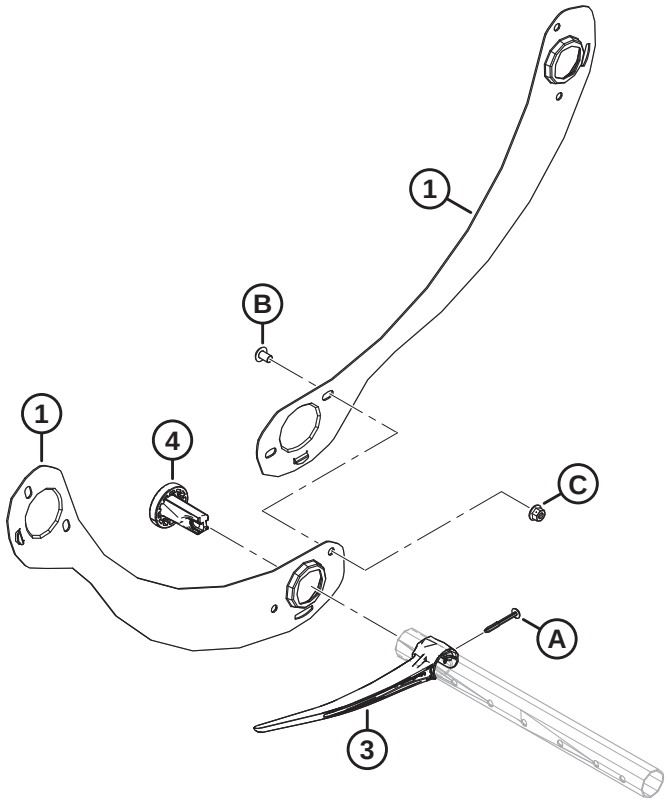

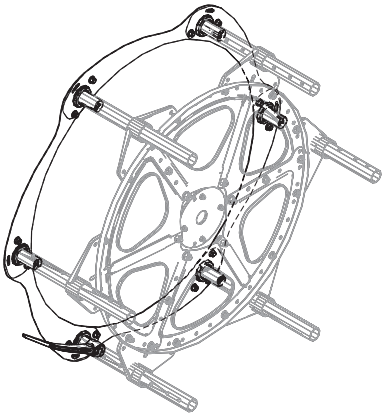

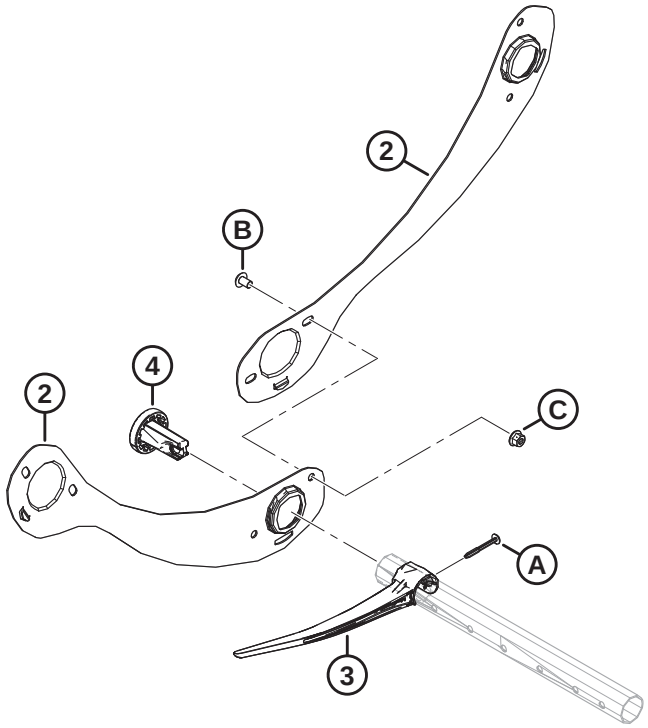

1036769

NOTE:

Top illustration shows 5 bat; bottom illustration shows 6 bat.

Ref	Part Number	Description	Qty	Serial Number
1	311795	SHIELD – 5 BAT RH REEL, TAIL END	5	
2	311822	SHIELD – 6 BAT RH REEL TAIL END	6	
3	311524	FINGER – PLASTIC, LH ANGLED (10 PACK) [245]		
4	273968	BUSHING – ENDSHIELD	5	
A	252687	SCREW – 48° PLASTITE TWIN HELIX		
B	136640	SCREW – TORX TRUSS HD M10 X1.5 X 16 X SPCL-8.8-AA1J		
C	135799	NUT – HEX FLG CTR LOC M10 X 1.5-10		

245. Quantities: 5 bat = 5, 6 bat = 6.

66 Reel – Endshields, Tail End, Outboard

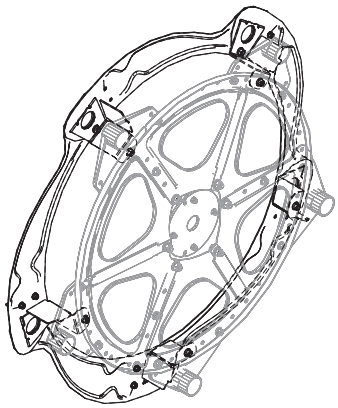

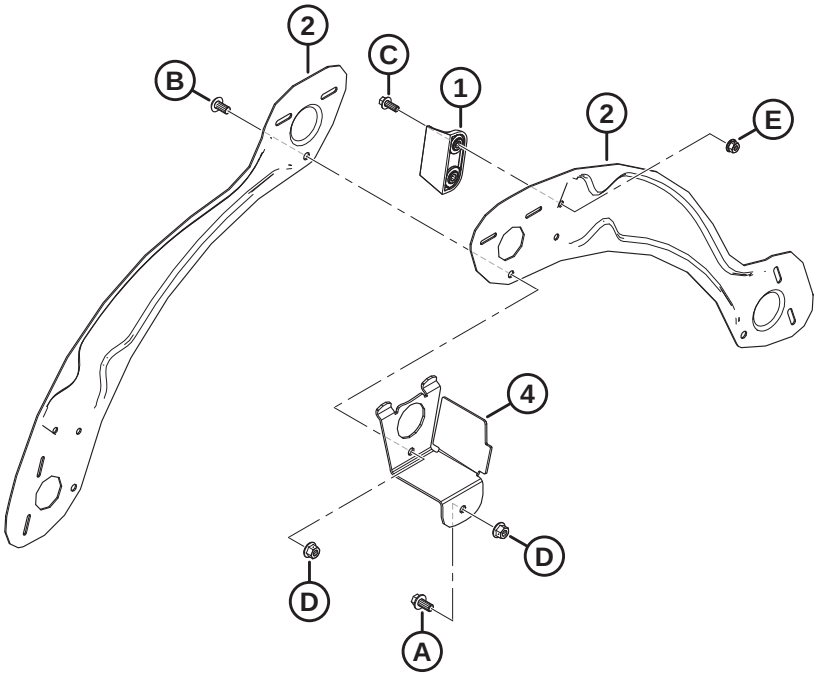

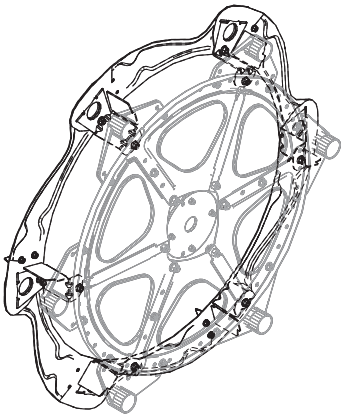

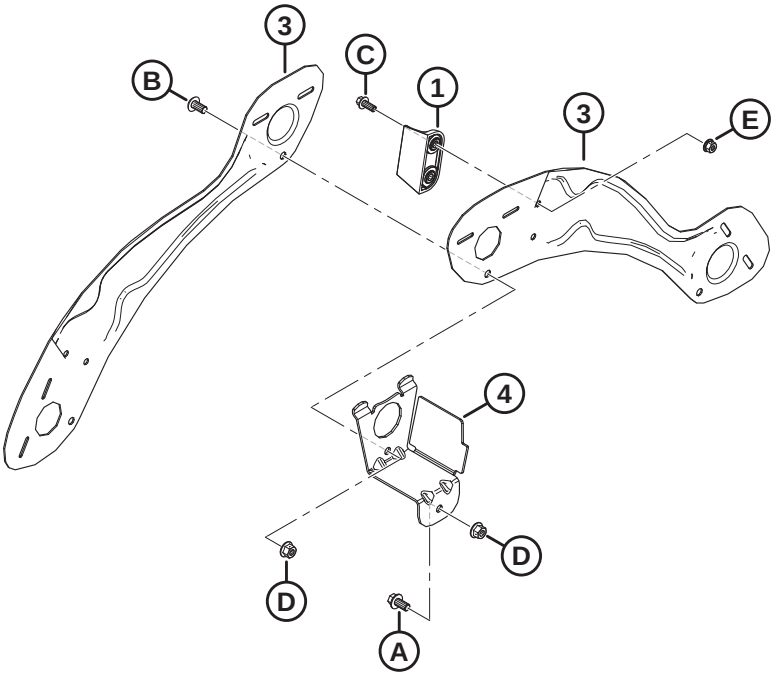

1036771

NOTE:

Top illustration shows 5 bat; bottom illustration shows 6 bat.

Ref	Part Number	Description	Qty	Serial Number
1	313035	PADDLE – REEL END, HYTREL	3	
2	311695	SHIELD – OUTBOARD LH 5 BAT	5	
3	311753	SHIELD – OUTBOARD LH 6 BAT	6	
4	311965	SUPPORT – WELDT TAIL END [246]		
A	152655	BOLT – HEX FLG HD M10 X 1.5 X 20-8.8-AA1J		
B	136395	SCREW – TORX TRUSS HD M10 X 1.5 X 20 X SPCL-8.8-A3L		
C	136300	BOLT – HEX FLG HD TFL M8 X 1.25 X 20-8.8-AA3L		
D	135799	NUT – HEX FLG CTR LOC M10 X 1.5-10		
E	135337	NUT – HEX FLG CTR LK M8 X 1.25-8-AA1J		

246. Quantities: 5 bat = 5, 6 bat = 6.

67 Skid Shoes – End and Center

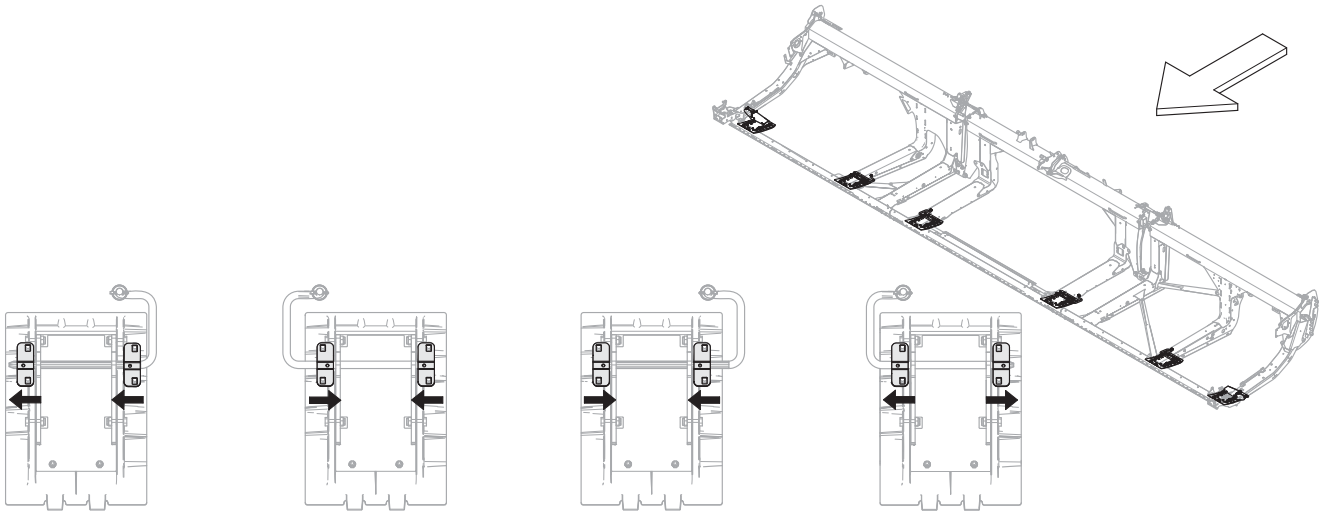

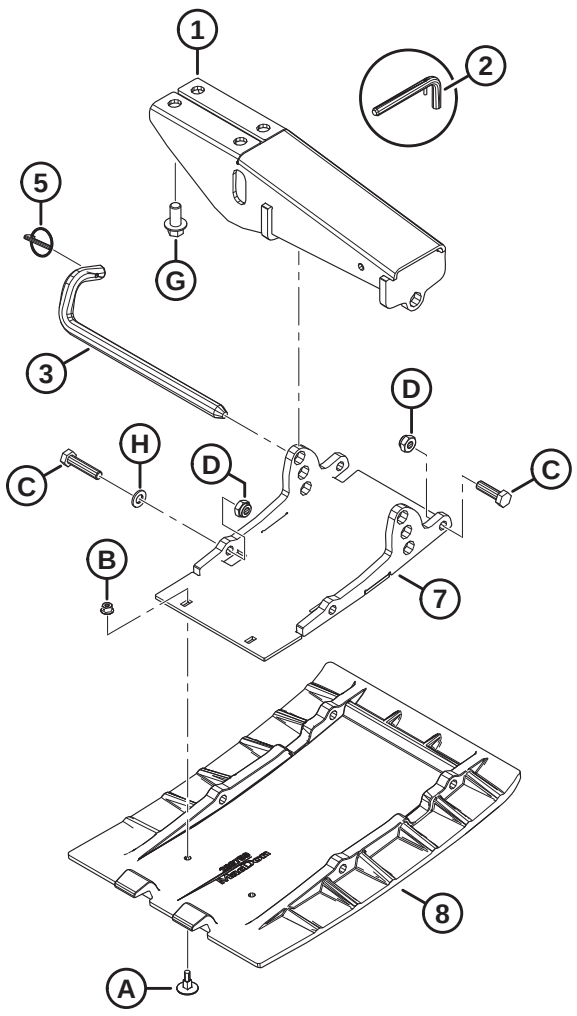

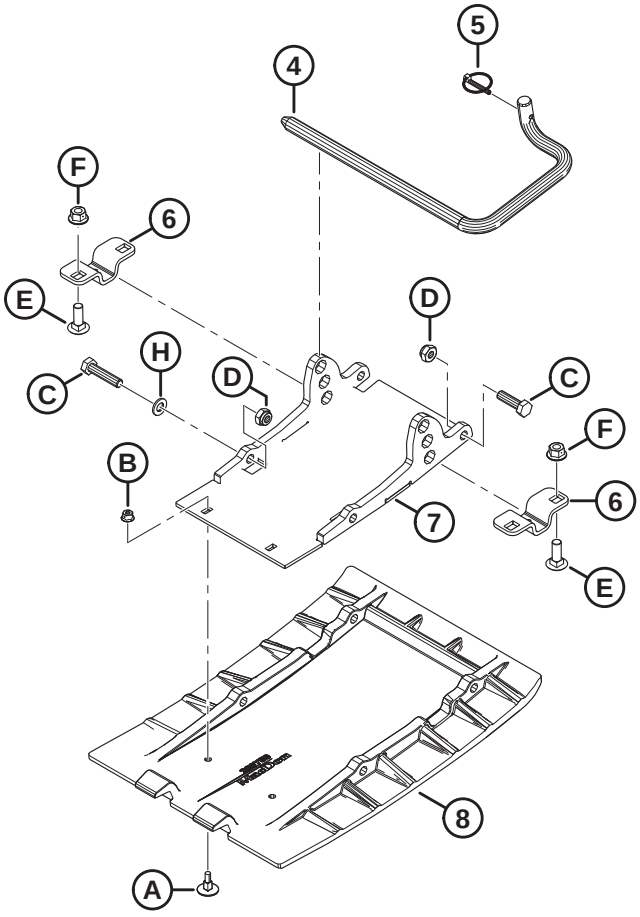

1043569

SKID SHOES – END AND CENTER

Ref	Part Number	Description	Qty	Serial Number
1	312680	MOUNT WELDT – SKID SHOE (END)	2	
	312777	KIT – OUTER SHOE MOUNT C/W PIN [247]	A/R	
2	313965	ASSY – PIN (SERVICE ONLY) [248]	A/R	
3	312675	ROD – ENGAGING	2	
	312777	KIT – OUTER SHOE MOUNT C/W PIN [247]	A/R	
4	165588	ROD – ENGAGING RH [249]	2	
	165168	ROD – ENGAGING LH [249]	2	
5	50193	PIN – LYNCH [250]	6	
6	232806	BRACKET – SHOE SUPPORT [251]	8	
7	289869	SUPPORT WELDT – PLATE [250]	6	
8	289759	SHOE – WEARPLATE, POLYETHYLENE [250]	6	
A	252176	BOLT – ELEV CSK M6 X 1 X 23-8.8		
B	152668	NUT – HEX FLG CTR LOC M6 X 1-8		
C	135335	BOLT – HEX HD M10 X 1.5 X 45-8.8-AA1J		
D	184692	NUT – HEX NYLOC M10 X 1.5-8-AA1J		
E	184662	BOLT – RHSN TFL M10 X 1.5 X 30-8.8-AA1J		
F	135799	NUT – HEX FLG CTR LOC M10 X 1.5-10		
G	136399	BOLT – HEX FLG HD TFL M12 X 1.75 X 25-8.8-AA1J		
H	184711	WASHER – FLAT REG M10-200HV-AA1J		

247. The kit includes end skid shoe mount (MD #312680), engaging rod (MD #312675), and lynch pin (MD #50193). Kit is used to service headers with superseded mounts (MD #251872) and superseded rods (MD #232674).
248. Pin assembly includes lock pin (MD #23370) and spring pin (MD #30907). Pin assembly (MD #313965) remains available for service only.
249. Right engaging rod is shown in the illustration. Quantities of RH engaging rod (MD #165588) and LH engaging rod (MD #165168) are one of each for FD225 headers, and two of each for FD230–FD250 headers.
250. Quantities: FD225 = 4, FD230–FD250 = 6.
251. Orientation of this bracket varies, be sure to install as per shown for each center skid shoe. Compare location of small hole with arrows. Quantities: FD225 = 4, FD230–FD250 = 8.

68 Hydraulics – Manifold Fittings and Fasteners

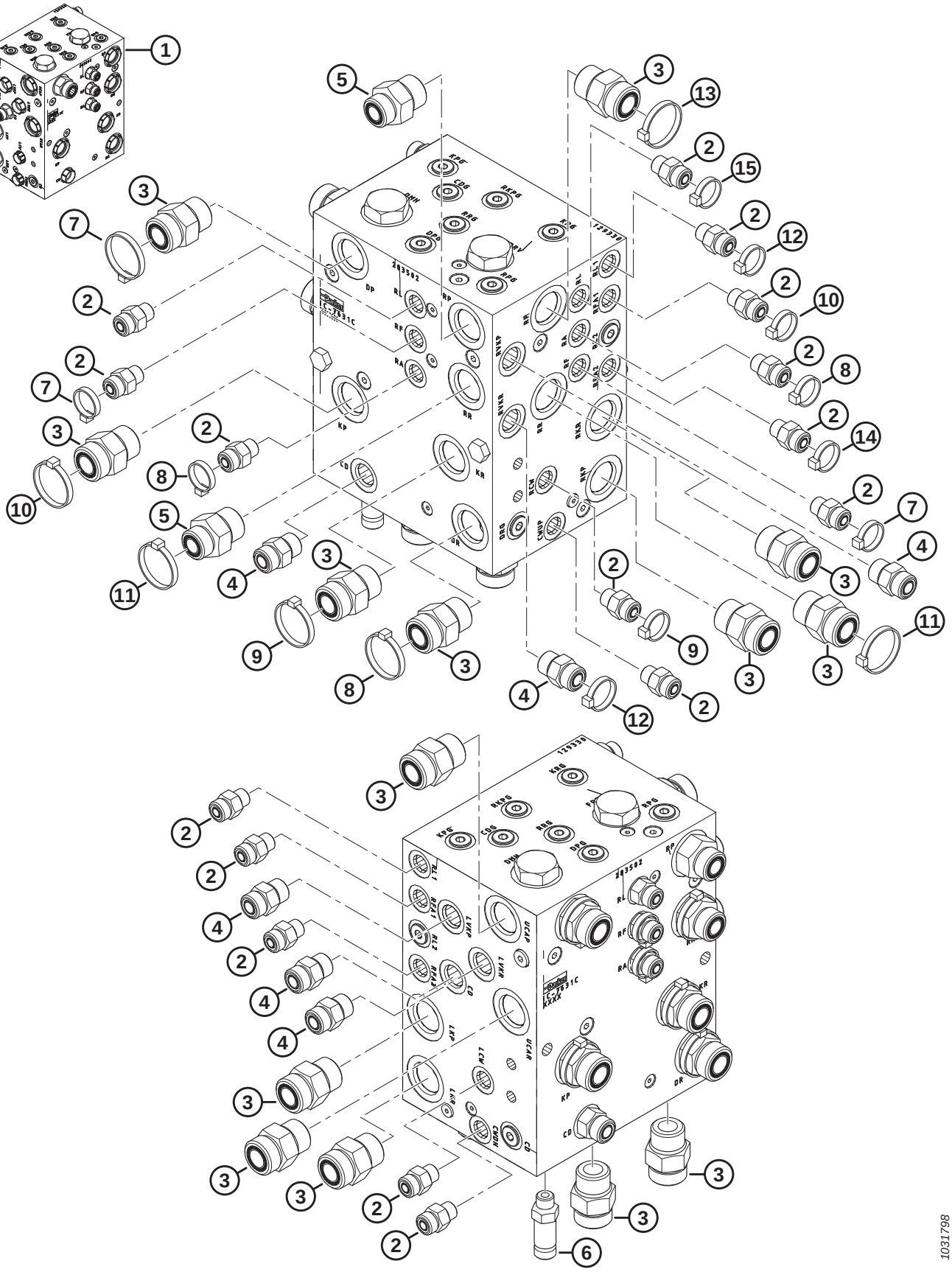

Ref	Part Number	Description	Qty	Serial Number
1	283502	MANIFOLD ASSY – DK UNTIMED [252]	A/R	
	283500	MANIFOLD ASSY – SK [253]	A/R	
2	135778	FITTING – ADAPTER	15	
	50219	O-RING – Ø1.98 X Ø11.89		
	135865	O-RING – Ø1.78 X Ø9.25		
3	135788	FITTING – ADAPTER	14	
	30971	O-RING – Ø2.95 X Ø23.47		
	135868	O-RING – Ø1.78 X Ø18.77		
4	135780	FITTING – ADAPTER	6	
	44209	O-RING – Ø2.21 X Ø16.36		
	135866	O-RING – Ø1.78 X Ø12.42		
5	135786	FITTING – ADAPTER	2	
	30971	O-RING – Ø2.95 X Ø23.47		
	135867	O-RING – Ø1.78 X Ø15.60		
6	252902	FITTING – HYD CONNECTOR, LONG	1	
	50219	O-RING – Ø1.98 X Ø11.89		
	135865	O-RING – Ø1.78 X Ø9.25		
7	49227	FASTENER – CABLE TIE, GREEN	3	
8	40702	FASTENER – CABLE TIE, RED	3	
9	40703	FASTENER – CABLE TIE, BLUE	2	
10	40704	FASTENER – CABLE TIE, ORANGE	2	
11	40701	FASTENER – CABLE TIE, YELLOW	2	
12	252795	FASTENER – CABLE TIE, PINK	2	
13	49232	FASTENER – CABLE TIE, WHITE	1	
14	135266	FASTENER – CABLE TIE, LIGHT BLUE	1	
15	21763	FASTENER – CABLE TIE, BLACK	1	

252. Manifold assembly (MD #283502) includes 12 plugs (MD #100577), 2 plugs (MD #103575), 12 fittings (MD #135778), 1 fitting (MD #135780), 4 fittings (MD #135788), 1 plug (MD #136524), 3 plugs (MD #158174), and 2 plugs (MD #283567). For manifold plugs, refer to Section *69 Hydraulics – Manifold Plugs, page 163*.
253. Manifold assembly (MD #283500) includes 10 plugs (MD #100577), 2 plugs (MD #103575), 12 fittings (MD #135778), 1 fitting (MD #135780), 2 fittings (MD #135788), 2 plugs (MD #136269), 1 plug (MD #136524), 2 plugs (MD #158174), and 2 plugs (MD #283567). For manifold plugs, refer to Section *69 Hydraulics – Manifold Plugs, page 163*.

69 Hydraulics – Manifold Plugs

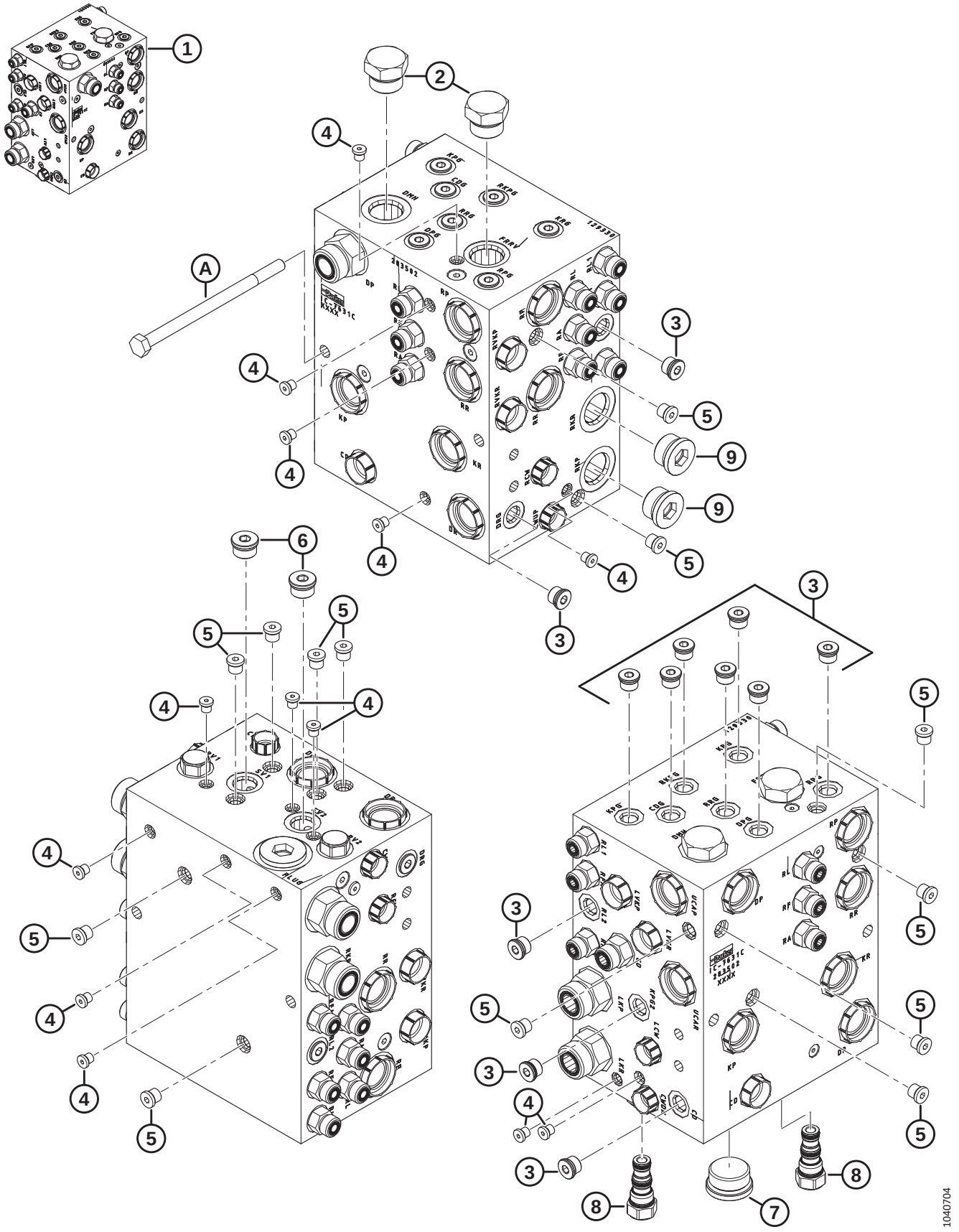

Ref	Part Number	Description	Qty	Serial Number
1	283502	MANIFOLD ASSY – DK UNTIMED [254]	A/R	
	283500	MANIFOLD ASSY – SK [255]	A/R	
2	103575	PLUG – HEX C/W O-RING	2	
3	100577	PLUG – HEX SOCKET C/W O-RING	12	
	50219	O-RING – Ø1.98 X Ø11.89		
4	135952	PLUG – HEX SOCKET C/W O-RING	13	
5	102711	PLUG – HEX SOCKET C/W O-RING	13	
6	158174	PLUG – HEX SOCKET C/W O-RING	2	
	44209	O-RING – Ø2.21 X Ø16.36		
7	136524	PLUG – HEX SOCKET	1	
	50220	O-RING – Ø2.95 X Ø29.74		
8	283567	PLUG – CAVITY	2	
	283569	SEAL KIT		
9	136269	FITTING – PLUG HYD 12 ORB HEX SOC [256]	2	
	30971	O-RING – Ø2.95 X Ø23.47		
A	136850	BOLT – HEX HD M10 X 1.5 X 160-8.8-AA1J		

254. Manifold assembly (MD #283502) includes 12 plugs (MD #100577), 2 plugs (MD #103575), 12 fittings (MD #135778), 1 fitting (MD #135780), 4 fittings (MD #135788), 1 plug (MD #136524), 3 plugs (MD #158174), and 2 plugs (MD #283567). For manifold plugs, refer to Section *68 Hydraulics – Manifold Fittings and Fasteners, page 161*.
255. Manifold assembly (MD #283500) includes 10 plugs (MD #100577), 2 plugs (MD #103575), 12 fittings (MD #135778), 1 fitting (MD #135780), 2 fittings (MD #135788), 2 plugs (MD #136269), 1 plug (MD #136524), 2 plugs (MD #158174), and 2 plugs (MD #283567). For manifold fittings, refer to Section *68 Hydraulics – Manifold Fittings and Fasteners, page 161*.
256. Single-knife configurations only.

70 Hydraulics – Knife Drive, Single and Double Knife, Left Side (FD225, FD230, FD235, FD240, FD241, and FD245)

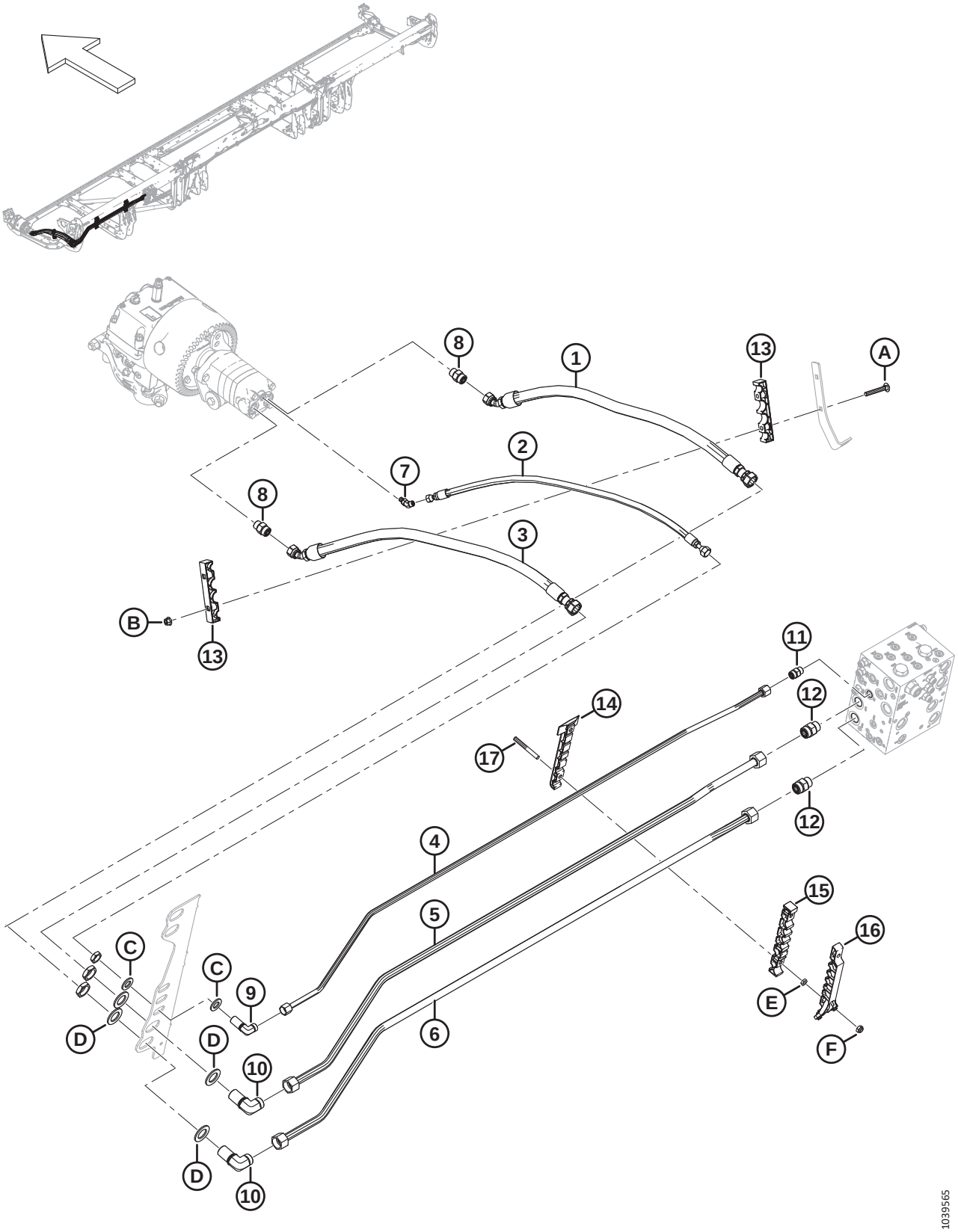

Ref	Part Number	Description	Qty	Serial Number
1	283063	HOSE – HYD	1	
2	283065	HOSE – HYD	1	
3	283202	HOSE – HYD	1	
4	283233	LINE – HYDRAULIC (FD225) [257]	1	
	283048	LINE – HYDRAULIC (FD230) [258]	1	
	283201	LINE – HYDRAULIC (FD235) [259]	1	
	283411	LINE – HYDRAULIC (FD240) [260]	1	
	283458	LINE – HYDRAULIC (FD241) [261]	1	
	283411	LINE – HYDRAULIC (FD245) [262]	1	
5	283232	LINE – HYDRAULIC (FD225) [263]	1	
	283047	LINE – HYDRAULIC (FD230) [264]	1	
	283104	LINE – HYDRAULIC (FD235) [265]	1	
	283410	LINE – HYDRAULIC (FD240) [266]	1	
	283457	LINE – HYDRAULIC (FD241) [267]	1	
	283410	LINE – HYDRAULIC (FD245) [268]	1	
6	283231	LINE – HYDRAULIC (FD225) [263]	1	
	283046	LINE – HYDRAULIC (FD230) [264]	1	
	283102	LINE – HYDRAULIC (FD235) [265]	1	
	283409	LINE – HYDRAULIC (FD240) [266]	1	
	283456	LINE – HYDRAULIC (FD241) [267]	1	
	283409	LINE – HYDRAULIC (FD245) [268]	1	
7	252307	FITTING – ELBOW 45° HYD	1	
	50223	O-RING – Ø1.83 X Ø8.92		
	135957	O-RING – Ø1.78 X Ø7.65		
8	184461	FITTING – ADAPTER HYD	2	
	44210	O-RING – Ø2.46 X Ø19.18		
	135867	O-RING – Ø1.78 X Ø15.60		

257. Used for FD225 headers.
258. Used for FD230 headers.
259. Used for FD235 headers.
260. Used for FD240 headers.
261. Used for FD241 headers.
262. Used for FD245 headers.
263. Used for FD225 headers.
264. Used for FD230 headers.
265. Used for FD235 headers.
266. Used for FD240 headers.
267. Used for FD241 headers.
268. Used for FD245 headers.

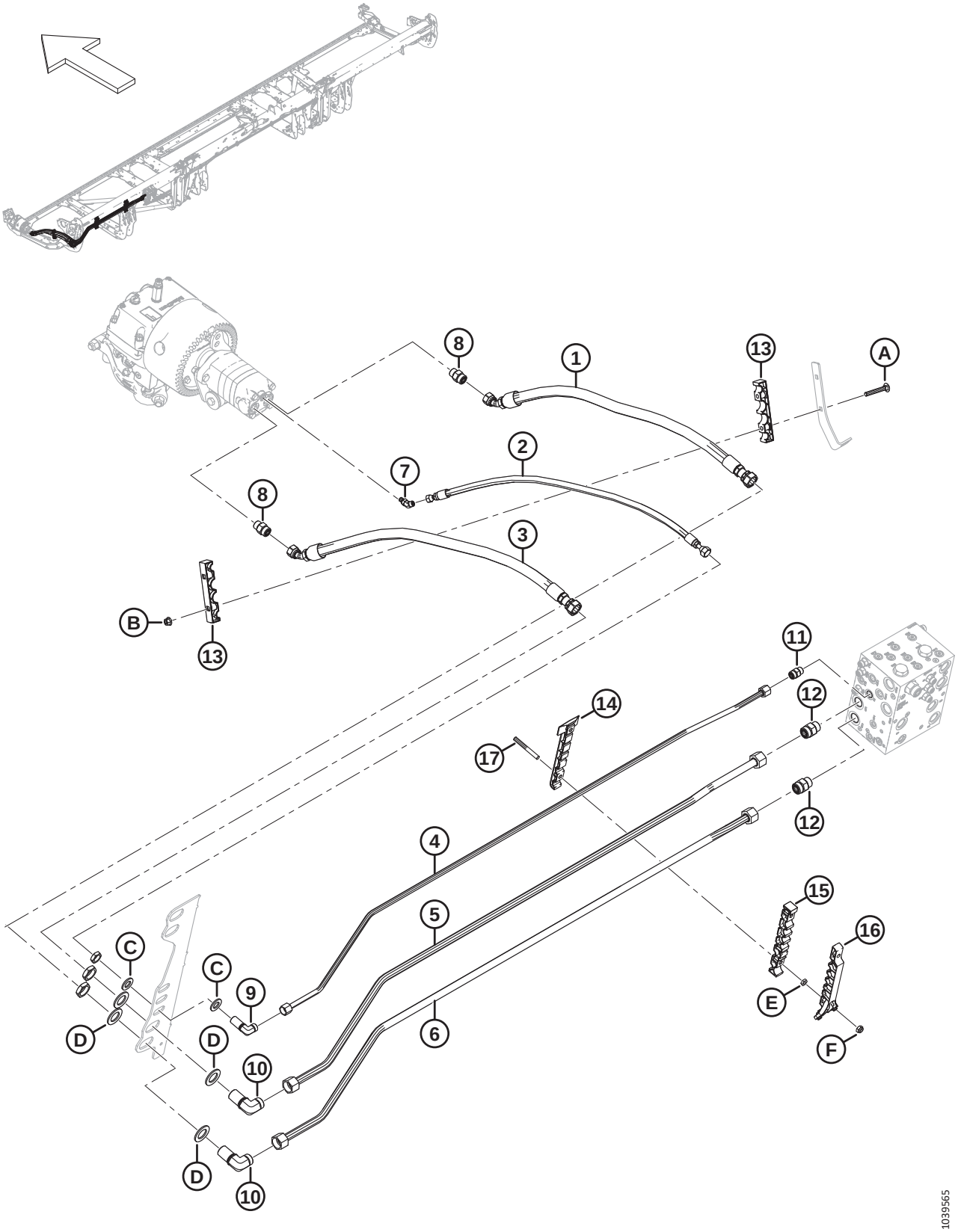
8
1
13
A
2
7
8
3
B
13
11
12
14
17
12
4
5
6
15
16
E
F
C
C
9
D
D
10
D
10
1039565

Ref	Part Number	Description	Qty	Serial Number
9	136244	FITTING – ELBOW 90° BULKHEAD HYD [269]	1	
	135866	O-RING – Ø1.78 X Ø12.42		
10	136245	FITTING – ELBOW 90° BULKHEAD HYD [269]	2	
	135868	O-RING – Ø1.78 X Ø18.77		
11	135780	FITTING – ADAPTER	1	
	44209	O-RING – Ø2.21 X Ø16.36		
	135866	O-RING – Ø1.78 X Ø12.42		
12	135788	FITTING – ADAPTER	2	
	30971	O-RING – Ø2.95 X Ø23.47		
	135868	O-RING – Ø1.78 X Ø18.77		
13	283984	CLAMP – LINE KNIFE	2	
14	283797	CLAMP – LINE BOTTOM LH [270]		
15	283807	CLAMP – LINE MIDDLE LH [270]		
16	311233	CLAMP – LINE TOP LH [270]		
17	312654	STUD – THRD CLAMP PATCH WING [271]		
A	136495	BOLT – RHSN M10 X 1.5 X 70-8.8-AA1J	2	
B	135799	NUT – HEX FLG CTR LOC M10 X 1.5-10	2	
C	18601	WASHER – FLAT SAE	2	
D	136355	WASHER – FLAT 2.0 IN OD ZP	4	
E	136442	NUT – HEX THIN M10 X 1.5-05-AA1J		
F	184692	NUT – HEX NYLOC M10 X 1.5-8-AA1J		

269. The fitting includes a securing nut.
270. Quantities: FD225 = 1, FD230 = 2, FD235 = 3, FD240 = 4, FD241 = 4, and FD245 = 4.
271. Quantities: FD225 = 2, FD230 = 4, FD235 = 6, FD240 = 8, FD241 = 8, and FD245 = 8.

71 Hydraulics – Knife Drive, Double Knife, Left Side (FD250)

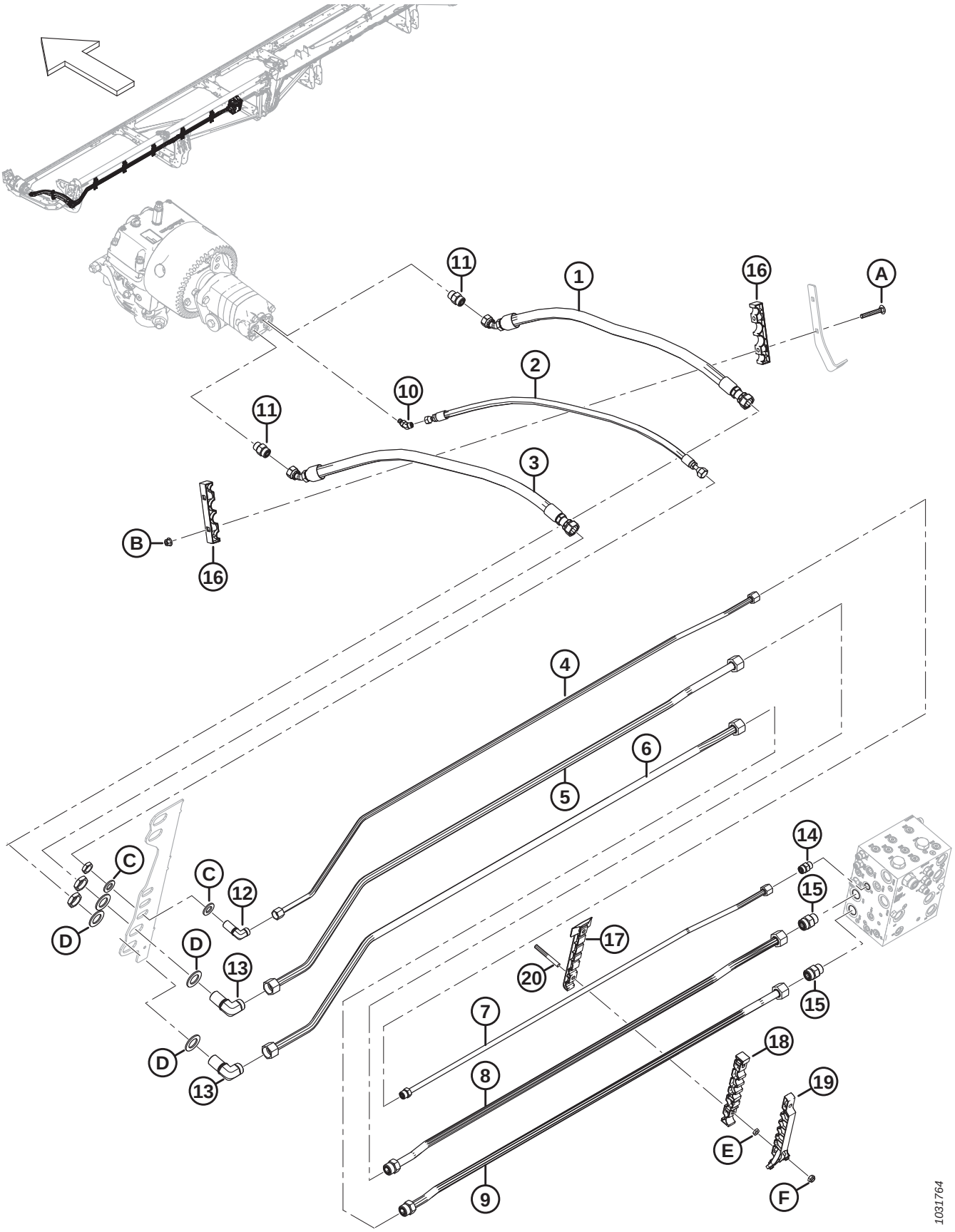

Ref	Part Number	Description	Qty	Serial Number
1	283063	HOSE – HYD	1	
2	283065	HOSE – HYD	1	
3	283202	HOSE – HYD	1	
4	283465	LINE – HYDRAULIC (FD250)	1	
5	283464	LINE – HYDRAULIC (FD250)	1	
6	283463	LINE – HYDRAULIC (FD250)	1	
7	283174	LINE – HYDRAULIC (FD250)	1	
	135866	O-RING – Ø1.78 X Ø12.42		
8	283173	LINE – HYDRAULIC (FD250)	1	
	135868	O-RING – Ø1.78 X Ø18.77		
9	283172	LINE – HYDRAULIC (FD250)	1	
	135868	O-RING – Ø1.78 X Ø18.77		
10	252307	FITTING – ELBOW 45° HYD	1	
	50223	O-RING – Ø1.83 X Ø8.92		
	135957	O-RING – Ø1.78 X Ø7.65		
11	184461	FITTING – ADAPTER HYD	2	
	44210	O-RING – Ø2.46 X Ø19.18		
	135867	O-RING – Ø1.78 X Ø15.60		
12	136244	FITTING – ELBOW 90° BULKHEAD HYD [272]	1	
	135866	O-RING – Ø1.78 X Ø12.42		
13	136245	FITTING – ELBOW 90° BULKHEAD HYD [272]	2	
	135868	O-RING – Ø1.78 X Ø18.77		
14	135780	FITTING – ADAPTER	1	
	44209	O-RING – Ø2.21 X Ø16.36		
	135866	O-RING – Ø1.78 X Ø12.42		
15	135788	FITTING – ADAPTER	2	
	30971	O-RING – Ø2.95 X Ø23.47		
	135868	O-RING – Ø1.78 X Ø18.77		
16	283984	CLAMP – LINE KNIFE	2	
17	283797	CLAMP – LINE BOTTOM LH	5	
18	283807	CLAMP – LINE MIDDLE LH	5	
19	311233	CLAMP – LINE TOP LH	5	
20	312654	STUD – THRD CLAMP PATCH WING	10	
A	136495	BOLT – RHSN M10 X 1.5 X 70-8.8-AA1J		
B	135799	NUT – HEX FLG CTR LOC M10 X 1.5-10		

272. The fitting includes a securing nut.

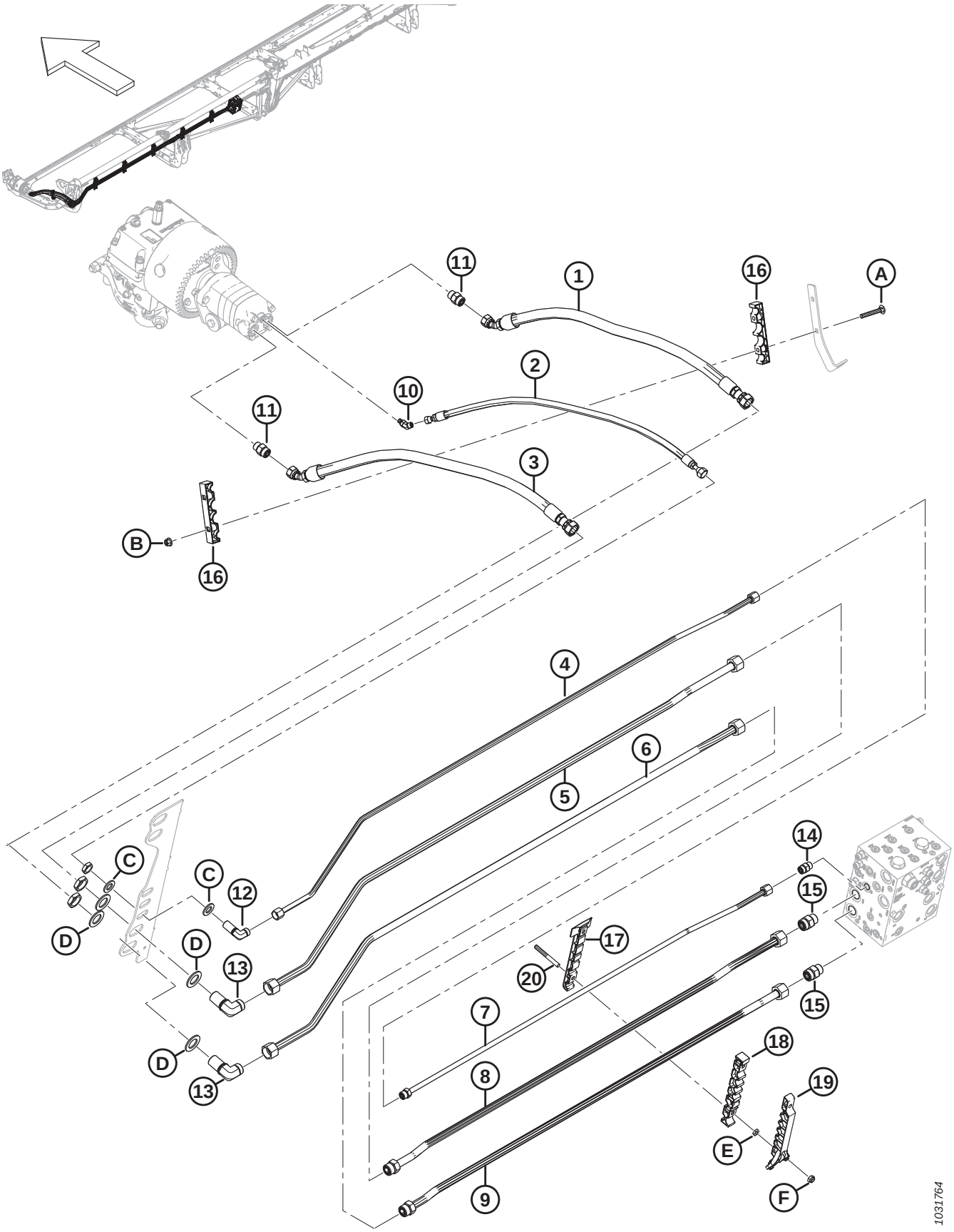
11
1
16
A
2
10
11
3
B
16
4
5
6
C
C
12
D
D
13
D
13
14
15
17
20
7
15
18
8
19
E
9
F
1031764

Ref	Part Number	Description	Qty	Serial Number
C	18601	WASHER – FLAT SAE		
D	136355	WASHER – FLAT 2.0 IN OD ZP		
E	136442	NUT – HEX THIN M10 X 1.5-05-AA1J		
F	184692	NUT – HEX NYLOC M10 X 1.5-8-AA1J		

72 Hydraulics – Knife Drive, Double Knife, Right Side (FD235, FD240, and FD241)

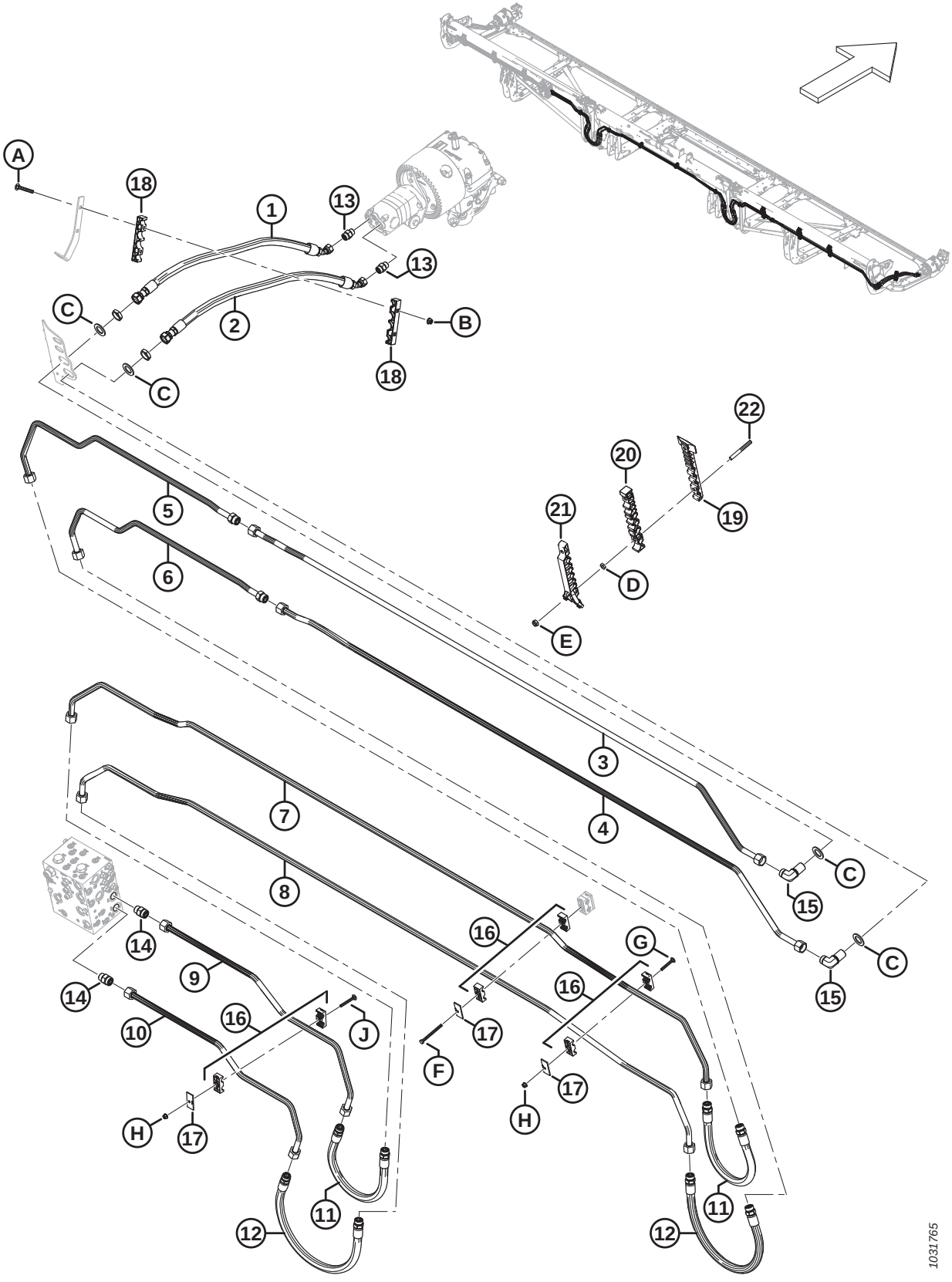

Ref	Part Number	Description	Qty	Serial Number
1	283202	HOSE – HYD	1	
2	283063	HOSE – HYD	1	
3	283413	LINE – HYDRAULIC (FD235–FD241)	1	
4	283412	LINE – HYDRAULIC (FD235–FD241)	1	
5	283203	LINE – HYDRAULIC (FD235) [273]	1	
	283422	LINE – HYDRAULIC (FD240) [274]	1	
	283427	LINE – HYDRAULIC (FD241) [275]	1	
	135868	O-RING – Ø1.78 X Ø18.77		
6	283204	LINE – HYDRAULIC (FD235) [276]	1	
	283421	LINE – HYDRAULIC (FD240) [277]	1	
	283426	LINE – HYDRAULIC (FD241) [278]	1	
	135868	O-RING – Ø1.78 X Ø18.77		
7	283036	LINE – HYDRAULIC (FD235–FD241)	1	
8	283035	LINE – HYDRAULIC (FD235–FD241)	1	
9	283069	LINE – HYDRAULIC (FD235–FD241)	1	
10	283068	LINE – HYDRAULIC (FD235–FD241)	1	
11	283070	HOSE – HYD	2	
	135868	O-RING – Ø1.78 X Ø18.77		
12	283378	HOSE – HYD	2	
	135868	O-RING – Ø1.78 X Ø18.77		
13	184461	FITTING – ADAPTER HYD	2	
	44210	O-RING – Ø2.46 X Ø19.18		
	135867	O-RING – Ø1.78 X Ø15.60		
14	135788	FITTING – ADAPTER	2	
	30971	O-RING – Ø2.95 X Ø23.47		
	135868	O-RING – Ø1.78 X Ø18.77		
15	136245	FITTING – ELBOW 90° BULKHEAD HYD [279]	2	
	135868	O-RING – Ø1.78 X Ø18.77		
16	232397	CLAMP – ASSY [280]	6	
17	232233	CLAMP – COVER PLATE	6	

273. Used for FD235 headers.
274. Used for FD240 headers.
275. Used for FD241 headers.
276. Used for FD235 headers.
277. Used for FD240 headers.
278. Used for FD241 headers.
279. The fitting includes a securing nut (NSS).
280. The clamp assembly includes two clamp halves (NSS). It does NOT include the cover plate or hardware.

HYDRAULICS – KNIFE DRIVE, DOUBLE KNIFE, RIGHT SIDE (FD235, FD240, AND FD241)

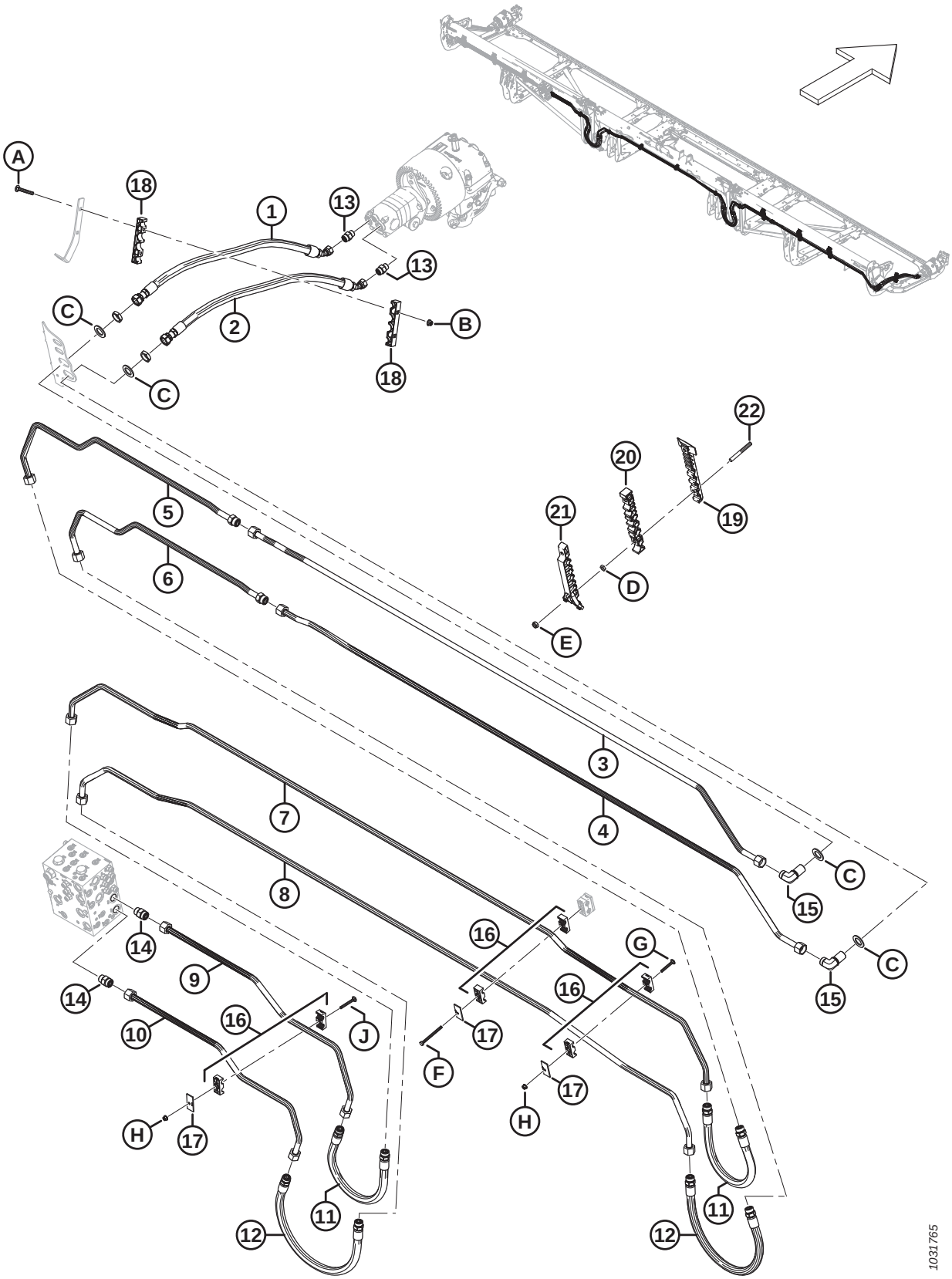

Ref	Part Number	Description	Qty	Serial Number
18	283984	CLAMP – LINE KNIFE	2	
19	283797	CLAMP – LINE BOTTOM LH		
20	283807	CLAMP – LINE MIDDLE LH		
21	311233	CLAMP – LINE TOP LH		
22	312654	STUD – THRD CLAMP PATCH WING		
A	136495	BOLT – RHSN M10 X 1.5 X 70-8.8-AA1J		
B	135799	NUT – HEX FLG CTR LOC M10 X 1.5-10		
C	136355	WASHER – FLAT 2.0 IN OD ZP		
D	136442	NUT – HEX THIN M10 X 1.5-05-AA1J		
E	184692	NUT – HEX NYLOC M10 X 1.5-8-AA1J		
F	252002	BOLT – HEX HD M8 X 1.25 X 100-8.8-AA1J		
G	136486	BOLT – RHSN M8 X 1.25 X 60-8.8-AA1J		
H	135337	NUT – HEX FLG CTR LK M8 X 1.25-8-AA1J		
J	136779	BOLT – RHSN M8 X 1.25 X 70-8.8-AA1J		

73 Hydraulics – Knife Drive, Double Knife, Right Side (FD245 and FD250)

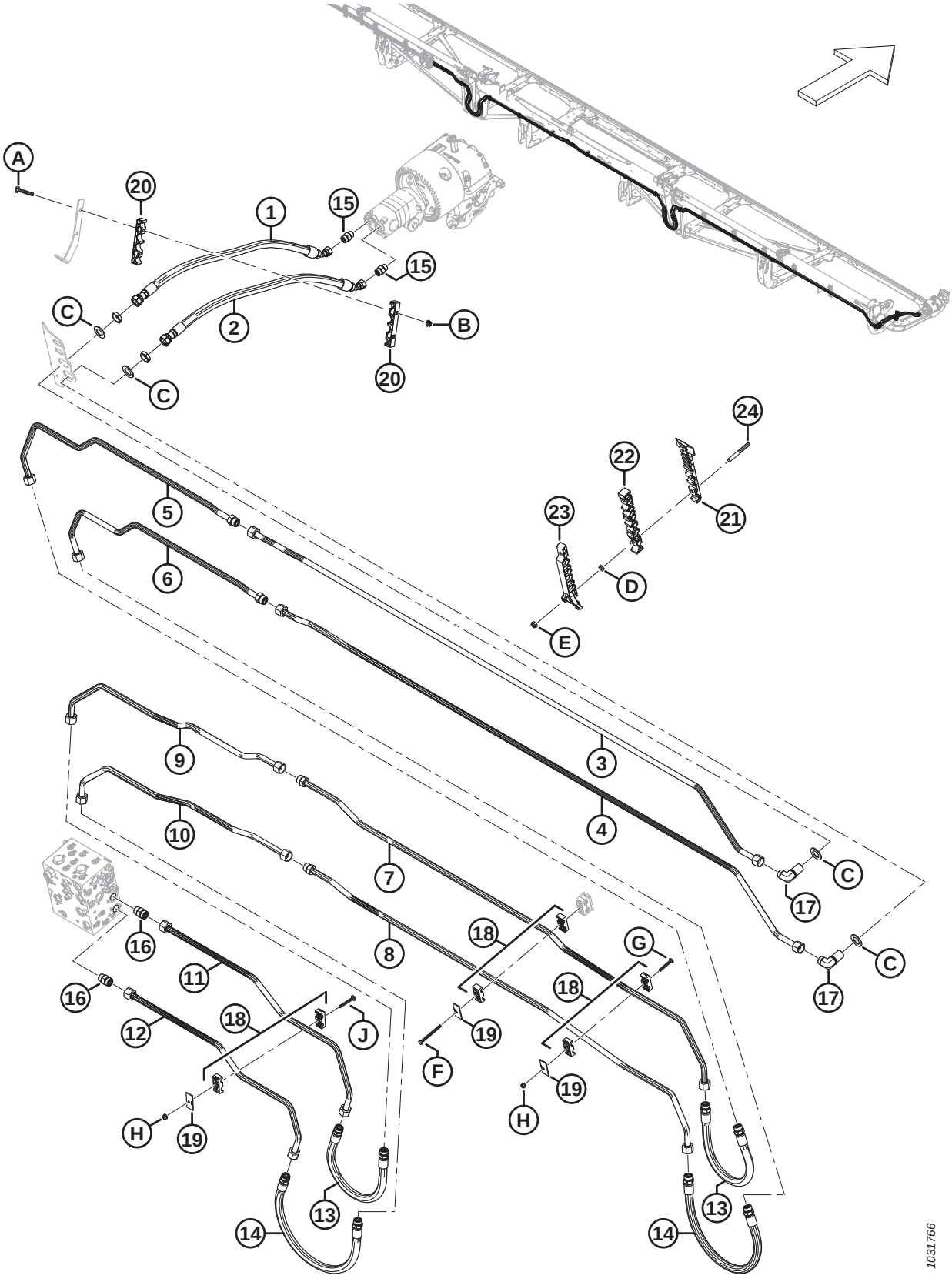

Ref	Part Number	Description	Qty	Serial Number
1	283202	HOSE – HYD	1	
2	283063	HOSE – HYD	1	
3	283413	LINE – HYDRAULIC (FD245 AND FD250)	1	
4	283412	LINE – HYDRAULIC (FD245 AND FD250)	1	
5	283422	LINE – HYDRAULIC (FD245) [281]	1	
	283176	LINE – HYDRAULIC (FD250) [282]	1	
	135868	O-RING – Ø1.78 X Ø18.77		
6	283421	LINE – HYDRAULIC (FD245) [283]	1	
	283175	LINE – HYDRAULIC (FD250) [284]	1	
	135868	O-RING – Ø1.78 X Ø18.77		
7	283443	LINE – HYDRAULIC (FD245 AND FD250)	1	
	135868	O-RING – Ø1.78 X Ø18.77		
8	283441	LINE – HYDRAULIC (FD245 AND FD250)	1	
	135868	O-RING – Ø1.78 X Ø18.77		
9	283442	LINE – HYDRAULIC (FD245 AND FD250)	1	
10	283440	LINE – HYDRAULIC (FD245 AND FD250)	1	
11	283069	LINE – HYDRAULIC (FD245 AND FD250)	1	
12	283068	LINE – HYDRAULIC (FD245 AND FD250)	1	
13	283070	HOSE – HYD	2	
	135868	O-RING – Ø1.78 X Ø18.77		
14	283378	HOSE – HYD	2	
	135868	O-RING – Ø1.78 X Ø18.77		
15	184461	FITTING – ADAPTER HYD	2	
	44210	O-RING – Ø2.46 X Ø19.18		
	135867	O-RING – Ø1.78 X Ø15.60		
16	135788	FITTING – ADAPTER	2	
	30971	O-RING – Ø2.95 X Ø23.47		
	135868	O-RING – Ø1.78 X Ø18.77		
17	136245	FITTING – ELBOW 90° BULKHEAD HYD [285]	2	
	135868	O-RING – Ø1.78 X Ø18.77		
18	232397	CLAMP – ASSY [286]	6	
19	232233	CLAMP – COVER PLATE	6	

281. Used for FD245 headers.
282. Used for FD250 headers.
283. Used for FD245 headers.
284. Used for FD250 headers.
285. The fitting includes a securing nut (NSS).
286. The clamp assembly includes two clamp halves (NSS). It does NOT include the cover plate or hardware.

HYDRAULICS – KNIFE DRIVE, DOUBLE KNIFE, RIGHT SIDE (FD245 AND FD250)

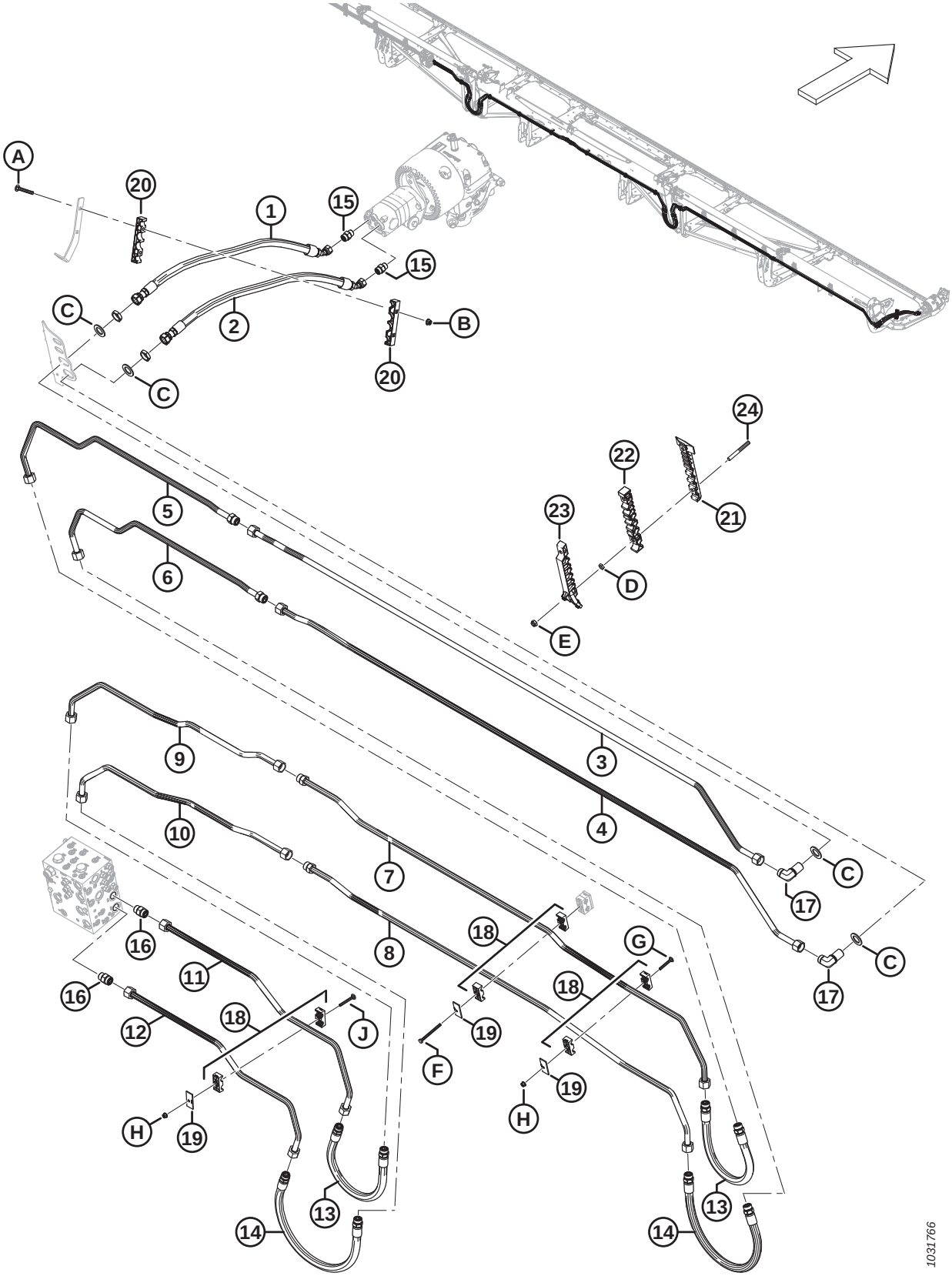

Ref	Part Number	Description	Qty	Serial Number
20	283984	CLAMP – LINE KNIFE	2	
21	283797	CLAMP – LINE BOTTOM LH [287]		
22	283807	CLAMP – LINE MIDDLE LH [287]		
23	311233	CLAMP – LINE TOP LH [287]		
24	312654	STUD – THRD CLAMP PATCH WING [288]		
A	136495	BOLT – RHSN M10 X 1.5 X 70-8.8-AA1J		
B	135799	NUT – HEX FLG CTR LOC M10 X 1.5-10		
C	136355	WASHER – FLAT 2.0 IN OD ZP		
D	136442	NUT – HEX THIN M10 X 1.5-05-AA1J		
E	184692	NUT – HEX NYLOC M10 X 1.5-8-AA1J		
F	252002	BOLT – HEX HD M8 X 1.25 X 100-8.8-AA1J		
G	136486	BOLT – RHSN M8 X 1.25 X 60-8.8-AA1J		
H	135337	NUT – HEX FLG CTR LK M8 X 1.25-8-AA1J		
J	136779	BOLT – RHSN M8 X 1.25 X 70-8.8-AA1J		

287. Quantities: FD245 = 4 and FD250 = 4.
288. Quantities: FD245 = 8 and FD250 = 8.

74 Hydraulics – Draper Drive (FD225, FD230, FD235, FD240, and FD241)

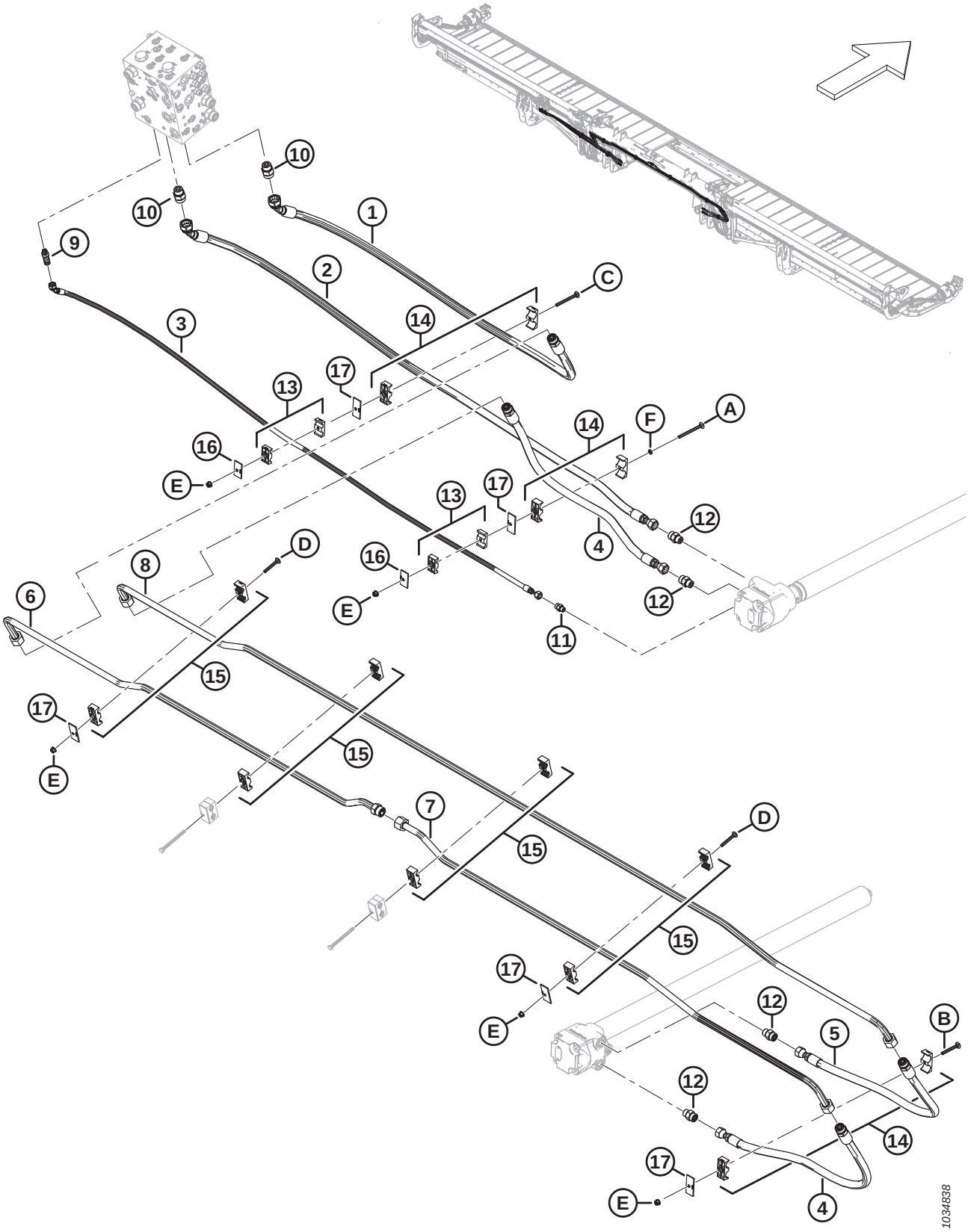

Ref	Part Number	Description	Qty	Serial Number
1	283099	HOSE – HYD	1	
	135868	O-RING – Ø1.78 X Ø18.77		
2	283098	HOSE – HYD	1	
3	283109	HOSE – HYD	1	
4	283091	HOSE – HYD	2	
	135868	O-RING – Ø1.78 X Ø18.77		
5	283108	HOSE – HYD	1	
	135868	O-RING – Ø1.78 X Ø18.77		
6	283038	LINE – HYDRAULIC	1	
	135868	O-RING – Ø1.78 X Ø18.77		
7	283039	LINE – HYDRAULIC	1	
8	283037	LINE – HYDRAULIC	1	
9	252902	FITTING – HYD CONNECTOR, LONG (CD) [289]	1	
	50219	O-RING – Ø1.98 X Ø11.89		
	135865	O-RING – Ø1.78 X Ø9.25		
10	135788	FITTING – ADAPTER (DP, DR) [290]	2	
	30971	O-RING – Ø2.95 X Ø23.47		
	135868	O-RING – Ø1.78 X Ø18.77		
11	135778	FITTING – ADAPTER	1	
	50219	O-RING – Ø1.98 X Ø11.89		
	135865	O-RING – Ø1.78 X Ø9.25		
12	184461	FITTING – ADAPTER HYD	4	
	44210	O-RING – Ø2.46 X Ø19.18		
	135867	O-RING – Ø1.78 X Ø15.60		
13	232395	CLAMP – ASSY [291]	2	
14	232219	CLAMP – ASSY [291]	3	
15	232397	CLAMP – ASSY [291]	4	
16	184303	CLAMP – COVER PLATE	2	
17	232233	CLAMP – COVER PLATE	5	
A	320274	BOLT – RHSN SPCL M8 X 1.25 X 100-8.8-ZINC		
B	136779	BOLT – RHSN M8 X 1.25 X 70-8.8-AA1J		
C	136746	BOLT – RHSN M8 X 1.25 X 90-8.8-AA1J		
D	136486	BOLT – RHSN M8 X 1.25 X 60-8.8-AA1J		

289. Connects to port CD.
290. Connects to port DP and DR.
291. The clamp assembly includes two clamp halves (NSS). It does NOT include the cover plate or hardware.

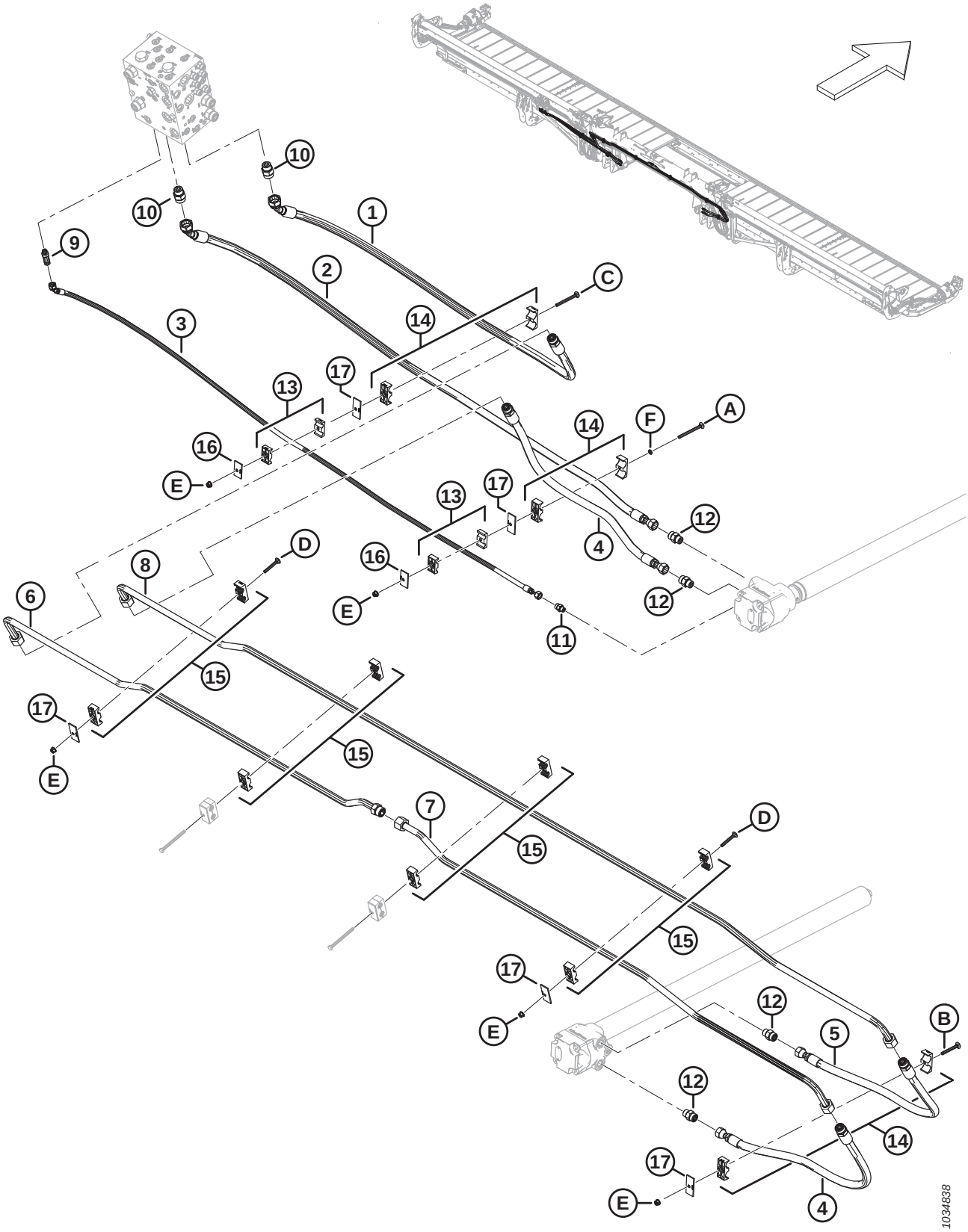
1034838

Ref	Part Number	Description	Qty	Serial Number
E	135337	NUT – HEX FLG CTR LK M8 X 1.25-8-AA1J		
F	184721	WASHER – NYLON RETAINING 1/4 IN.		

75 Hydraulics – Draper Drive (FD245 and FD250)

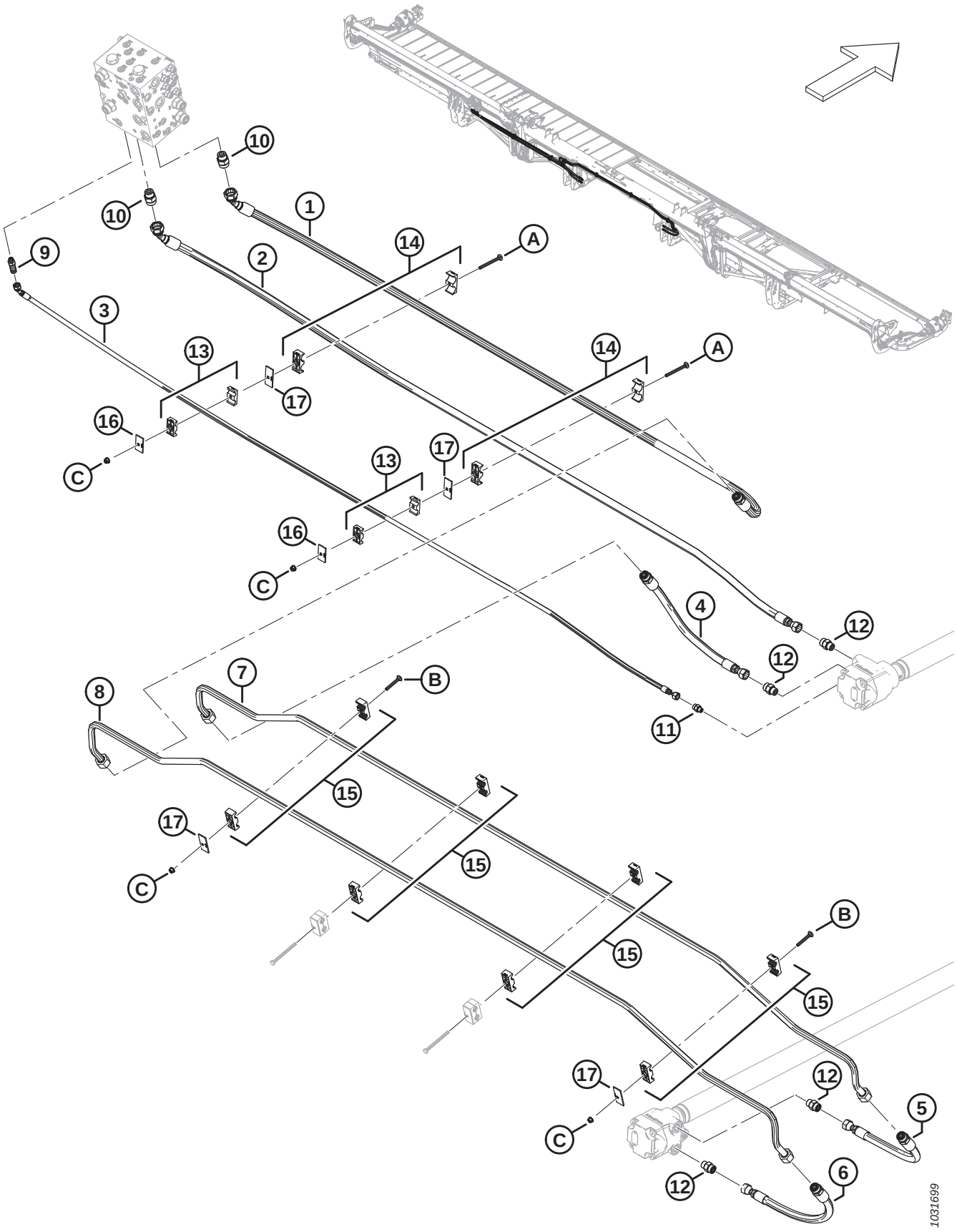

Ref	Part Number	Description	Qty	Serial Number
1	283562	HOSE – HYD	1	
	135868	O-RING – Ø1.78 X Ø18.77		
2	283561	HOSE – HYD	1	
3	283566	HOSE – HYD	1	
4	283563	HOSE – HYD	1	
	135868	O-RING – Ø1.78 X Ø18.77		
5	283564	HOSE – HYD	1	
	135868	O-RING – Ø1.78 X Ø18.77		
6	283565	HOSE – HYD	1	
	135868	O-RING – Ø1.78 X Ø18.77		
7	283508	LINE – HYDRAULIC	1	
8	283509	LINE – HYDRAULIC	1	
9	252902	FITTING – HYD CONNECTOR, LONG	1	
	50219	O-RING – Ø1.98 X Ø11.89		
	135865	O-RING – Ø1.78 X Ø9.25		
10	135788	FITTING – ADAPTER	2	
	30971	O-RING – Ø2.95 X Ø23.47		
	135868	O-RING – Ø1.78 X Ø18.77		
11	135778	FITTING – ADAPTER	1	
	50219	O-RING – Ø1.98 X Ø11.89		
	135865	O-RING – Ø1.78 X Ø9.25		
12	184461	FITTING – ADAPTER HYD	4	
	44210	O-RING – Ø2.46 X Ø19.18		
	135867	O-RING – Ø1.78 X Ø15.60		
13	232395	CLAMP – ASSY [292]	2	
14	232219	CLAMP – ASSY [292]	2	
15	232397	CLAMP – ASSY [292]	4	
16	184303	CLAMP – COVER PLATE	2	
17	232233	CLAMP – COVER PLATE	4	
A	136746	BOLT – RHSN M8 X 1.25 X 90-8.8-AA1J	2	
B	136486	BOLT – RHSN M8 X 1.25 X 60-8.8-AA1J	2	
C	135337	NUT – HEX FLG CTR LK M8 X 1.25-8-AA1J	4	

292. The clamp assembly includes two clamp halves (NSS). It does NOT include the cover plate or hardware.

76 Hydraulics – Lift and Fore-Aft, Single Reel, Left Arm (FD225)

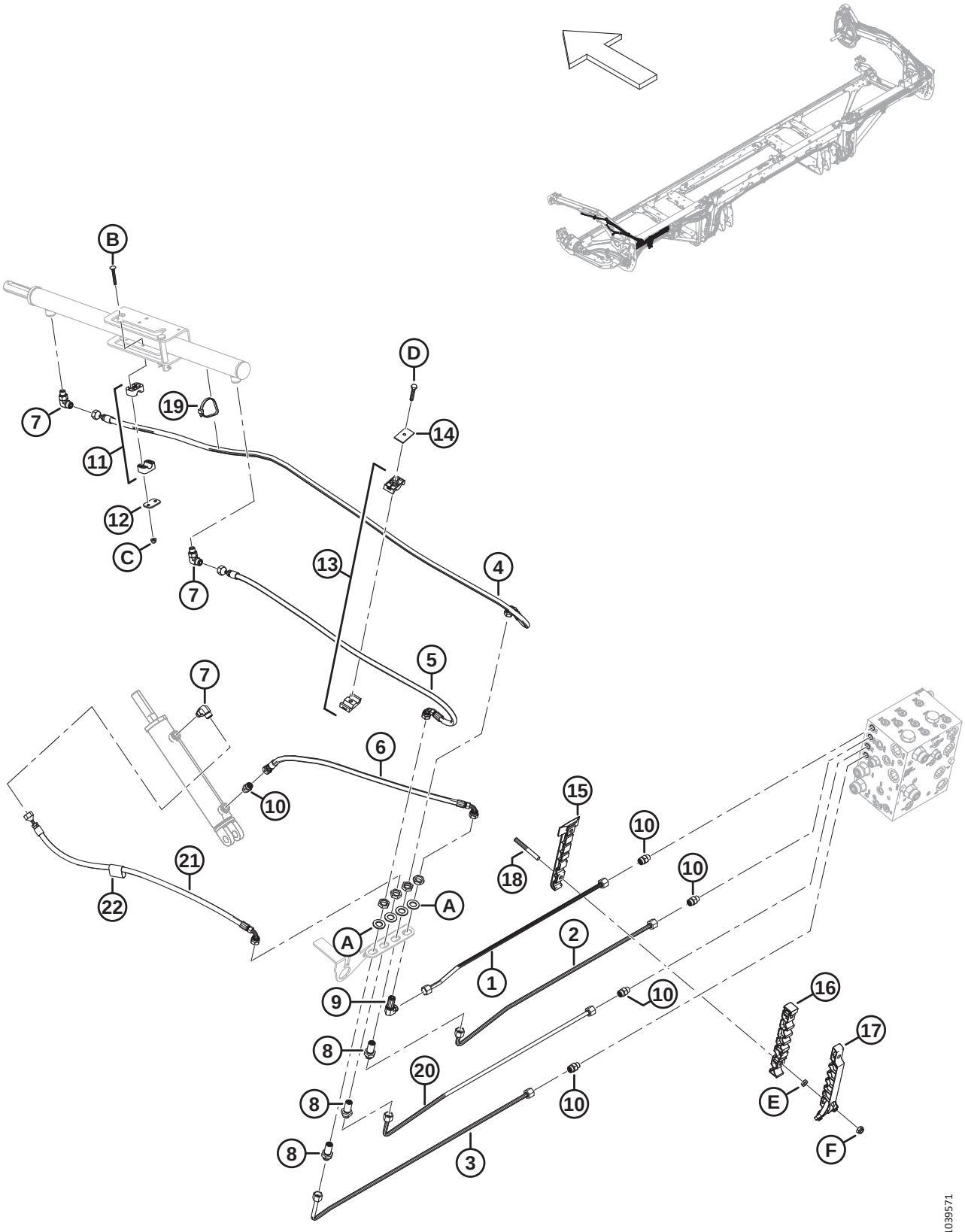

Ref	Part Number	Description	Qty	Serial Number
1	283249	LINE – HYDRAULIC (FD225)	1	
2	283248	LINE – HYDRAULIC (FD225)	1	
3	283246	LINE – HYDRAULIC (FD225)	1	
4	283057	HOSE – HYD	1	
5	283058	HOSE – HYD	1	
6	283059	HOSE – HYD	1	
7	136095	FITTING – ELBOW 90° HYD	3	
8	136145	FITTING – BULKHEAD UNION HYD [293]	3	
9	136150	FITTING – ELBOW 90° BLKHD HYD [293]	1	
10	135778	FITTING – ADAPTER	5	
11	283791	CLAMP – ASSY [294]	1	
12	255461	PLATE – COVER	1	
13	232395	CLAMP – ASSY [294]	1	
14	184303	CLAMP – COVER PLATE	1	
15	283797	CLAMP – LINE BOTTOM LH	1	
16	283807	CLAMP – LINE MIDDLE LH	1	
17	311233	CLAMP – LINE TOP LH	1	
18	312654	STUD – THRD CLAMP PATCH WING	2	
19	30753	FASTENER – CABLE TIE, BLACK	1	
20	283247	LINE – HYDRAULIC (FD225)	1	
21	283060	HOSE – HYD	1	
22	135443	CINCH STRAP – 4 IN. LG	1	
A	136540	WASHER – FLAT		
B	184644	BOLT – RHSN M6 X 1 X 50-8.8-ZINC		
C	152668	NUT – HEX FLG CTR LOC M6 X 1-8		
D	30660	BOLT – HEX HD M8 X 1.25 X 45-8.8-AA1J		
E	136442	NUT – HEX THIN M10 X 1.5-05-AA1J		
F	184692	NUT – HEX NYLOC M10 X 1.5-8-AA1J		

293. The fitting includes a securing nut (NSS).
294. The clamp assembly includes two clamp halves (NSS). It does NOT include the cover plate or hardware.

77 Hydraulics – Lift and Fore-Aft, Single Reel, Right Arm (FD225)

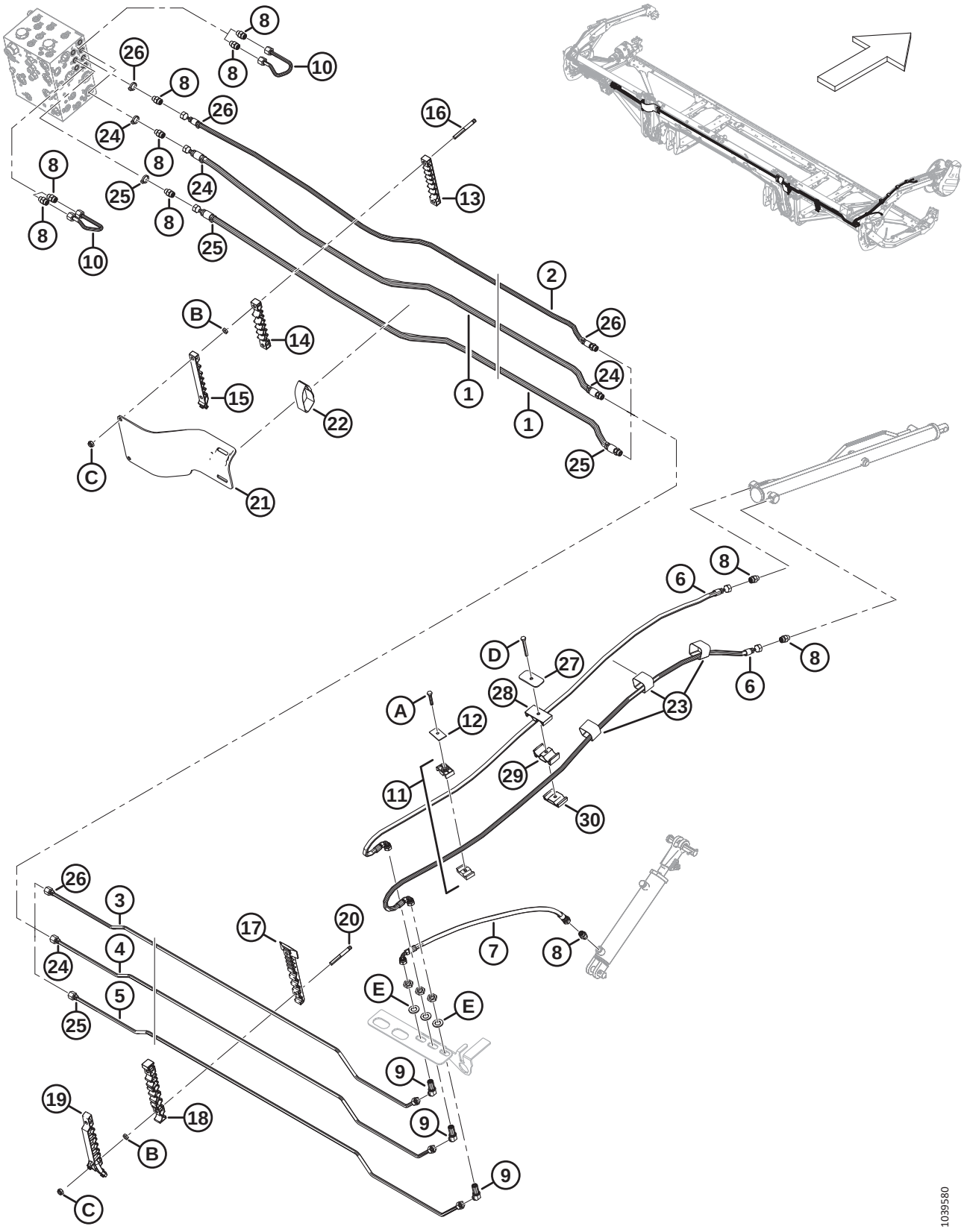

Ref	Part Number	Description	Qty	Serial Number
1	283096	HOSE – HYD	2	
	135865	O-RING Ø1.78 X Ø9.25		
2	323356	HOSE – HYD	1	
3	323343	LINE – HYDRAULIC (FD225)	1	
4	323344	LINE – HYDRAULIC (FD225)	1	
5	323345	LINE – HYDRAULIC (FD225)	1	
6	283327	HOSE – HYD	2	
7	283059	HOSE – HYD	1	
8	135778	FITTING – ADAPTER	10	
9	136146	FITTING – ELBOW 45° BLKHD HYD [295]	3	
10	283251	LINE – HYDRAULIC	2	
11	232395	CLAMP – ASSY [296]	1	
12	184303	CLAMP – COVER PLATE	1	
13	283909	CLAMP – LINE TOP FLEX LH	1	
	283906	CLAMP – LINE TOP FLEX RH	1	
14	283910	CLAMP – LINE MIDDLE FLEX LH	1	
	283907	CLAMP – LINE MIDDLE FLEX RH	1	
15	311461	CLAMP – LINE TOP FLEX LH	1	
	311462	CLAMP – LINE TOP FLEX RH	1	
16	312655	STUD – THRD CLAMP PATCH BLACK	2	
17	283820	CLAMP – LINE BOTTOM RH	1	
18	283818	CLAMP – LINE MIDDLE RH	1	
19	311451	CLAMP – LINE TOP RH	1	
20	312654	STUD – THRD CLAMP PATCH WING	4	
21	311354	SHIELD – HOSE TRANSITION LH	1	
	311360	SHIELD – HOSE TRANSITION RH	1	
22	170851	CINCH STRAP – 10 IN. LG	2	
23	135444	CINCH STRAP – 4 IN. LG	3	
24	40704	CABLE TIE – ORANGE	4	
25	40702	CABLE TIE – RED	4	
26	21763	CABLE TIE – BLACK	4	
27	323023	PLATE – CLAMP CENTER REEL ARM	1	
28	283989	PLATE – HOSE REEL TOP	1	
29	283988	PLATE – HOSE REEL MIDDLE	1	
30	283987	PLATE – HOSE REEL BOTTOM	1	

295. The fitting includes a securing nut (NSS).
296. The clamp assembly includes two clamp halves (NSS). It does NOT include the cover plate or hardware.

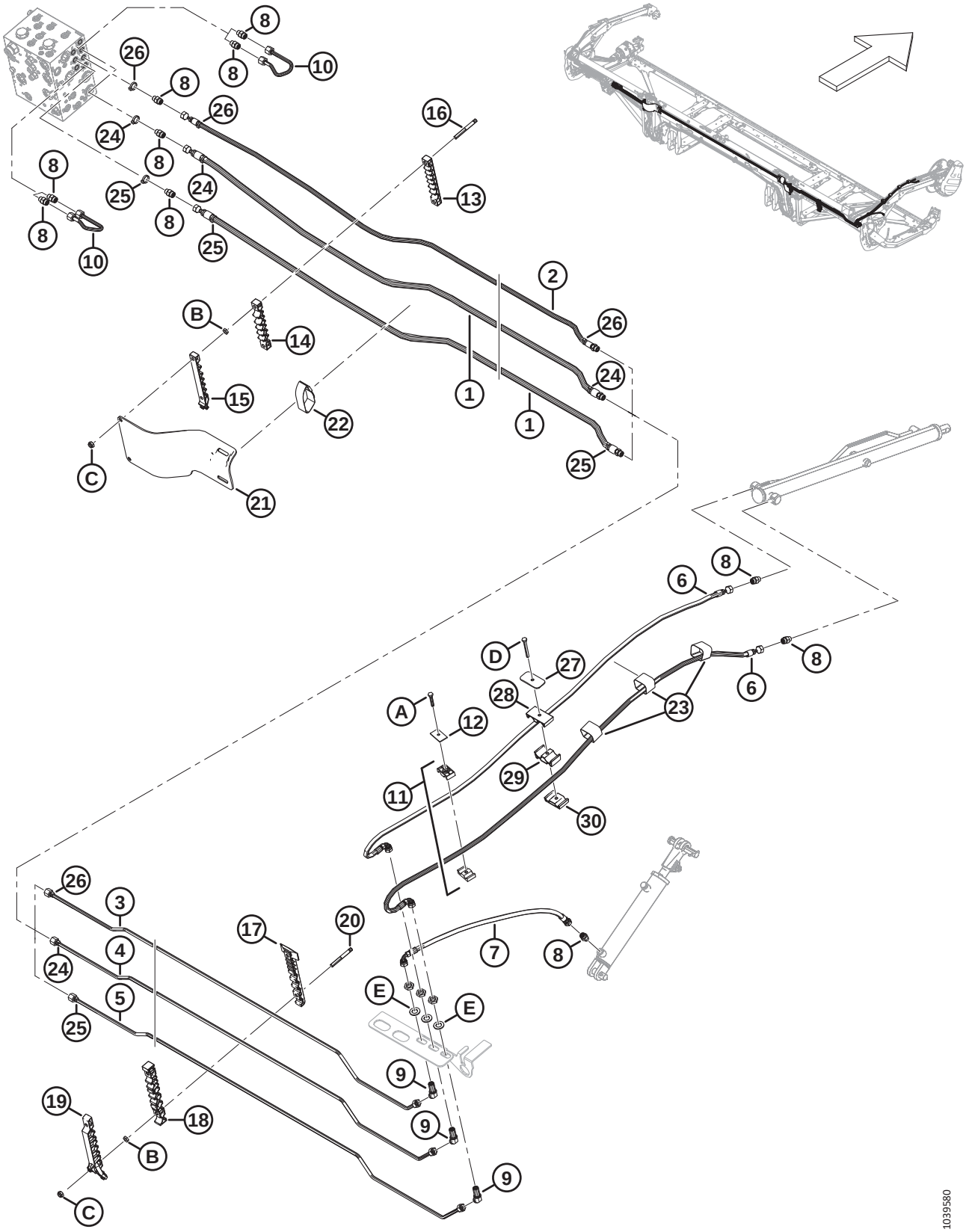
1039580

Ref	Part Number	Description	Qty	Serial Number
A	30660	BOLT – HEX HD M8 X 1.25 X 45-8.8-AA1J		
B	136442	NUT – HEX THIN M10 X 1.5-05-AA1J		
C	184692	NUT – HEX NYLOC M10 X 1.5-8-AA1J		
D	184656	BOLT – HEX HD M8 X 1.25 X 70-8.8-AA1J		
E	136540	WASHER – FLAT		

78 Hydraulics – Lift and Fore-Aft, Double Reel, Left Arm (FD230, FD235, FD240, and FD241)

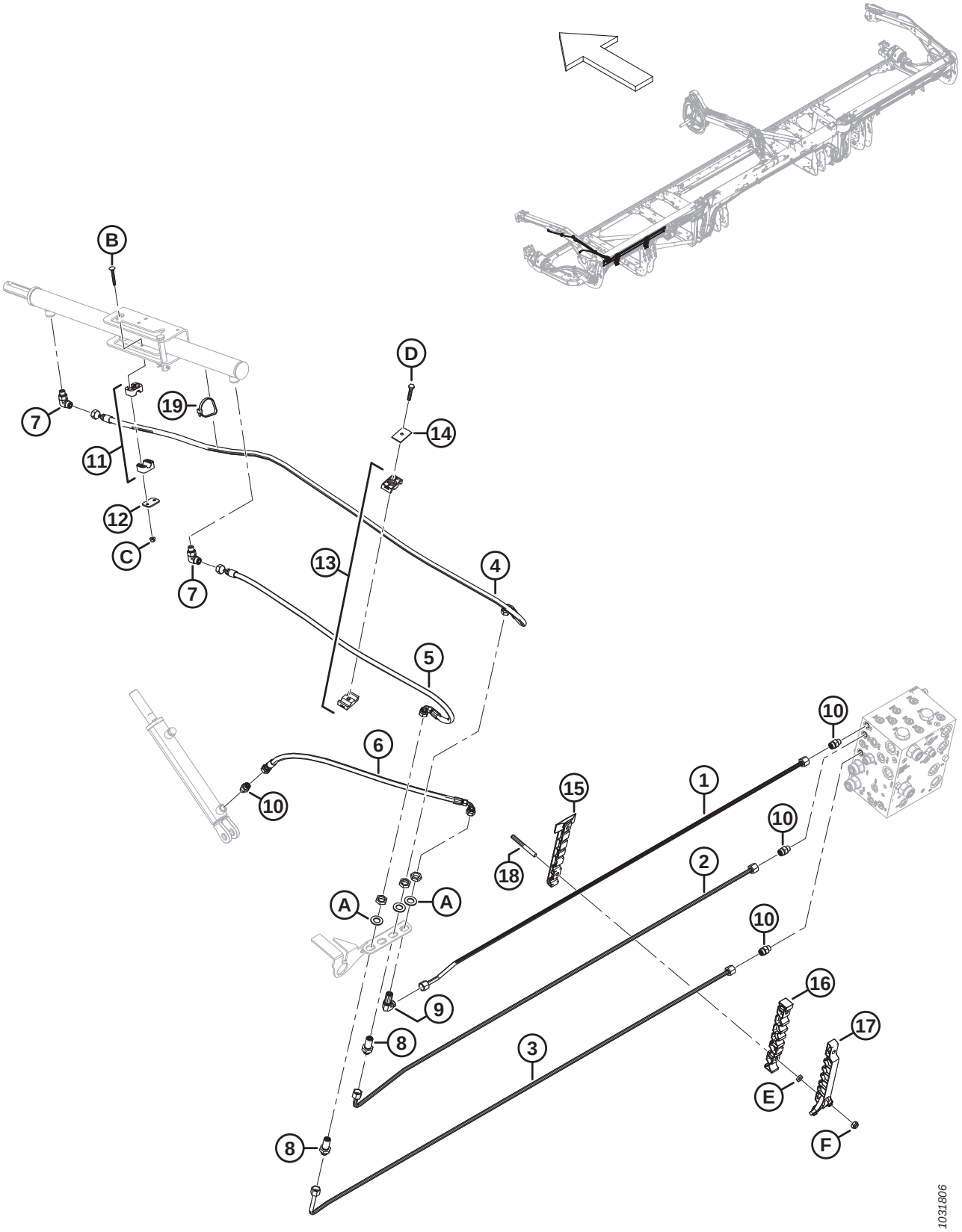

Ref	Part Number	Description	Qty	Serial Number
1	283056	LINE – HYDRAULIC (FD230) [297]	1	
	283144	LINE – HYDRAULIC (FD235) [298]	1	
	283420	LINE – HYDRAULIC (FD240) [299]	1	
	283183	LINE – HYDRAULIC (FD241) [300]	1	
2	283055	LINE – HYDRAULIC (FD230) [301]	1	
	283143	LINE – HYDRAULIC (FD235) [302]	1	
	283419	LINE – HYDRAULIC (FD240) [303]	1	
	283182	LINE – HYDRAULIC (FD241) [304]	1	
3	283053	LINE – HYDRAULIC (FD230) [301]	1	
	283141	LINE – HYDRAULIC (FD235) [302]	1	
	283417	LINE – HYDRAULIC (FD240) [303]	1	
	283180	LINE – HYDRAULIC (FD241) [304]	1	
4	283057	HOSE – HYD (FD230–FD241)	1	
5	283058	HOSE – HYD (FD230–FD241)	1	
6	283059	HOSE – HYD (FD230–FD241)	1	
7	136095	FITTING – ELBOW 90° HYD	2	
8	136145	FITTING – BULKHEAD UNION HYD [305]	2	
9	136150	FITTING – ELBOW 90° BLKHD HYD [305]	1	
10	135778	FITTING – ADAPTER	4	
11	283791	CLAMP – ASSY [306]	1	
12	255461	PLATE – COVER	1	
13	232395	CLAMP – ASSY [306]	1	
14	184303	CLAMP – COVER PLATE	1	
15	283797	CLAMP – LINE BOTTOM LH [307]		
16	283807	CLAMP – LINE MIDDLE LH [307]		
17	311233	CLAMP – LINE TOP LH [307]		
18	312654	STUD – THRD CLAMP PATCH WING [308]		
19	30753	FASTENER – CABLE TIE, BLACK	1	

297. Used for FD230 headers.
298. Used for FD235 headers.
299. Used for FD240 headers.
300. Used for FD241 headers.
301. Used for FD230 headers.
302. Used for FD235 headers.
303. Used for FD240 headers.
304. Used for FD241 headers.
305. The fitting includes a securing nut (NSS).
306. The clamp assembly includes two clamp halves (NSS). It does NOT include the cover plate or hardware.
307. Quantities: FD230 = 2, FD235 = 3, FD240 = 4, and FD241 = 4.
308. Quantities: FD230 = 4, FD235 = 6, FD240 = 8, and FD241 = 8.

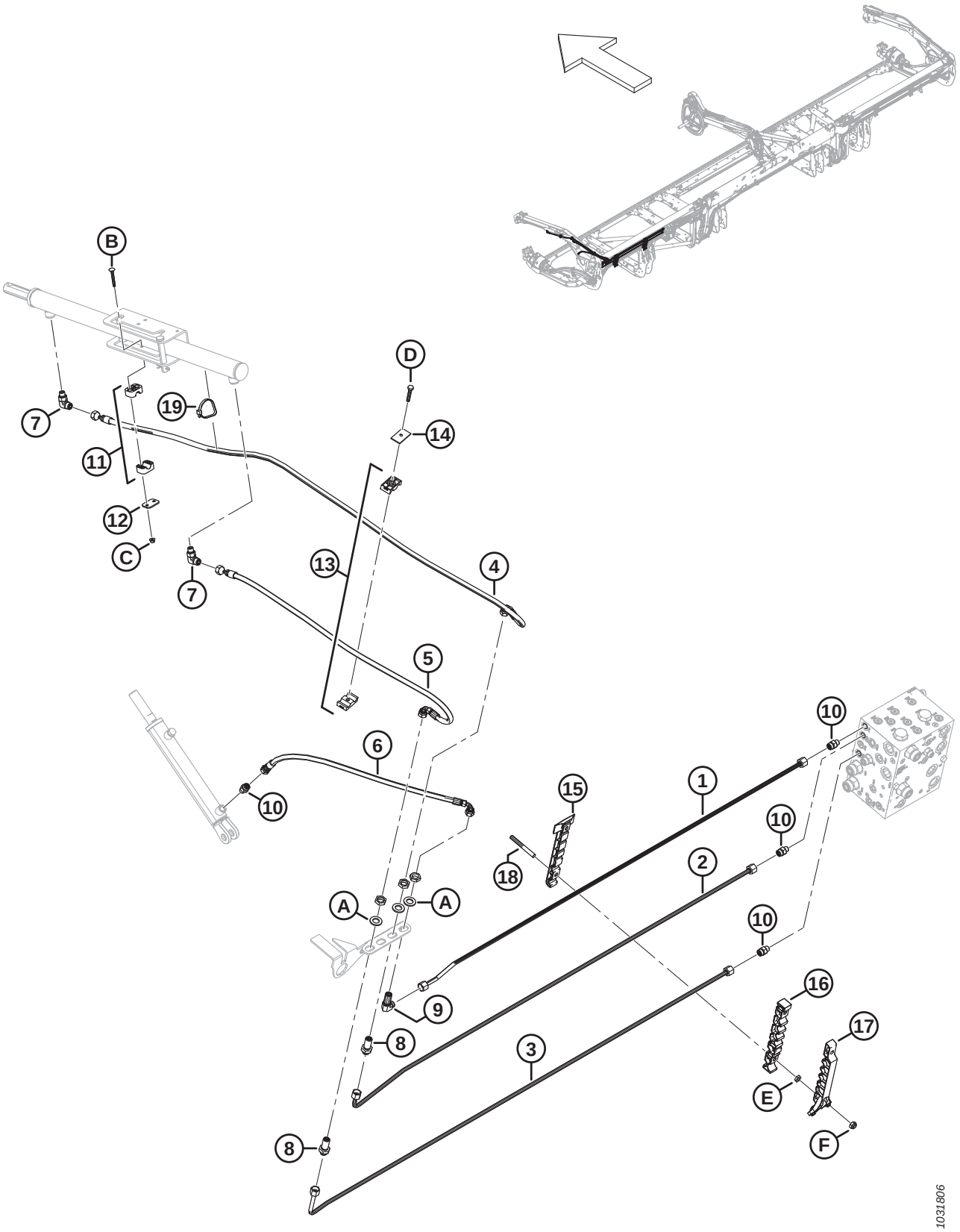
B
D
19
7
14
11
12
C
13
4
7
5
6
10
10
15
1
18
10
2
A
A
10
9
16
8
3
17
E
8
F
1031806

Ref	Part Number	Description	Qty	Serial Number
A	136540	WASHER – FLAT		
B	184644	BOLT – RHSN M6 X 1 X 50-8.8-ZINC		
C	152668	NUT – HEX FLG CTR LOC M6 X 1-8		
D	30660	BOLT – HEX HD M8 X 1.25 X 45-8.8-AA1J		
E	136442	NUT – HEX THIN M10 X 1.5-05-AA1J		
F	184692	NUT – HEX NYLOC M10 X 1.5-8-AA1J		

79 Hydraulics – Lift and Fore-Aft, Double Reel, Center Arm (FD230, FD235, FD240, and FD241)

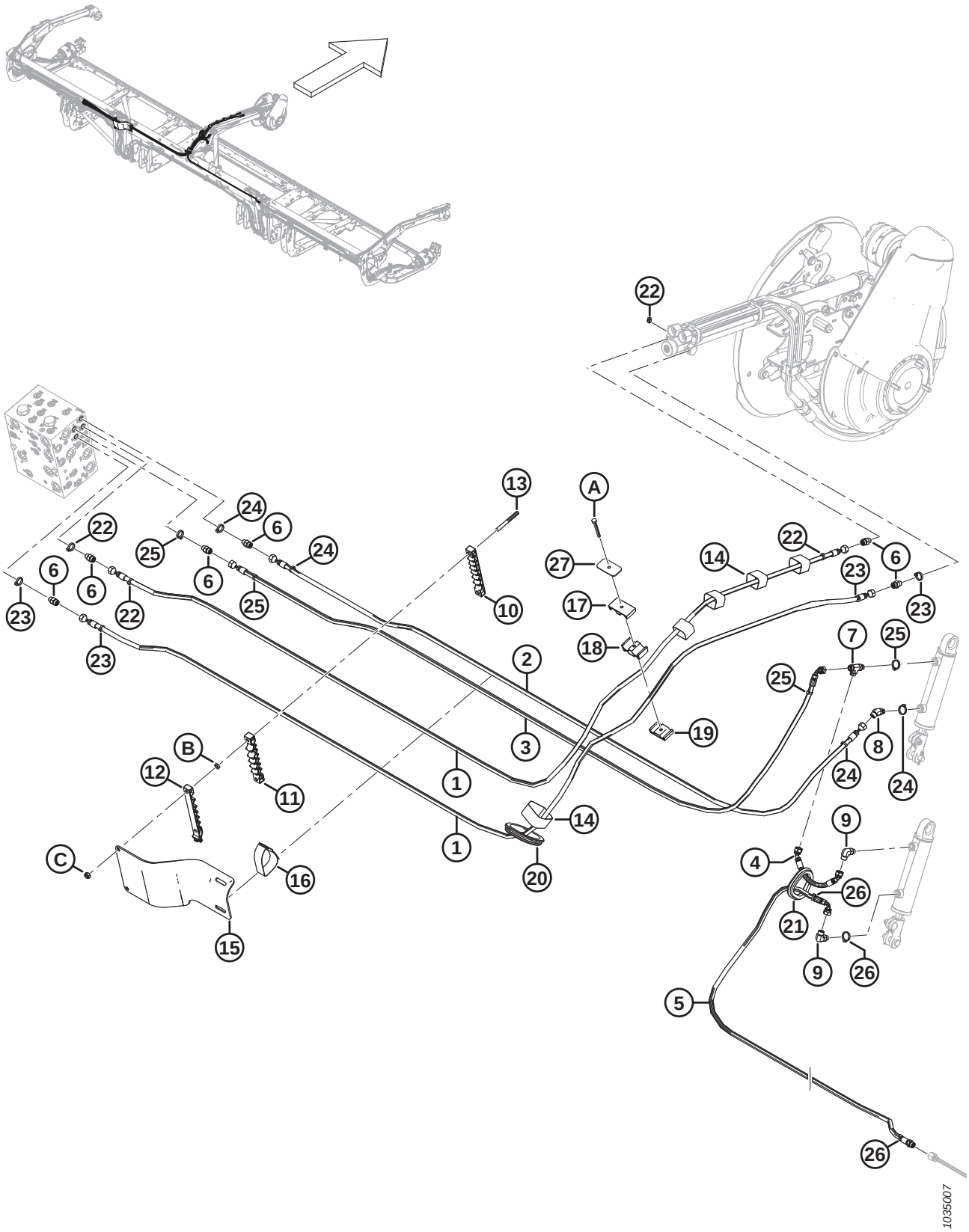

Ref	Part Number	Description	Qty	Serial Number
1	323660	HOSE – HYD, 1/4 IN ID, 4230 MM LG, 100R17	2	
2	323659	HOSE – HYD, 1/4 IN ID, 3060 MM LG, 100R17	1	
3	323661	HOSE – HYD, 1/4 IN ID, 3215 MM LG, 100R17	1	
4	283785	HOSE – HYD, 1/4 IN ID, 240 MM LG, 100R17	1	
5	323663	HOSE – HYD, 1/4 IN ID, 2750 MM LG, 100R17	1	
	135865	O-RING – Ø1.78 X Ø9.25		
6	135778	FITTING – ADAPTER	6	
7	136240	FITTING – TEE HYD	1	
8	136144	FITTING – ELBOW 45° HYD	1	
9	136095	FITTING – ELBOW 90° HYD	2	
10	283909	CLAMP – LINE BOTTOM FLEX LH	1	
11	283910	CLAMP – LINE MIDDLE FLEX LH	1	
12	311461	CLAMP – LINE TOP FLEX LH	1	
13	312655	STUD – THRD CLAMP PATCH BLACK	2	
14	135444	CINCH STRAP – 6 IN. LG	5	
15	311354	SHIELD – HOSE TRANSITION LH	1	
16	295929	CINCH STRAP – 12 IN. LG	1	
17	283989	CLAMP – HOSE REEL TOP	1	
18	283988	CLAMP – HOSE REEL MIDDLE	1	
19	283987	CLAMP – HOSE REEL BOTTOM	1	
20	125377	GROMMET – 91 MM I.D.	1	
21	283889	GROMMET – RUBBER	1	
22	40704	FASTENER – CABLE TIE, ORANGE	4	
23	40702	FASTENER – CABLE TIE, RED	4	
24	252795	FASTENER – CABLE TIE, PINK	4	
25	21763	FASTENER – CABLE TIE, BLACK	4	
26	252794	FASTENER – CABLE TIE, PURPLE	3	
27	323023	PLATE – CLAMP CENTER REEL ARM	1	
A	184656	BOLT – HEX HD M8 X 1.25 X 70-8.8-AA1J		
B	136442	NUT – HEX THIN M10 X 1.5-05-AA1J		
C	184692	NUT – HEX NYLOC M10 X 1.5-8-AA1J		

80 Hydraulics – Lift and Fore-Aft, Double Reel, Right Arm (FD230 and FD235)

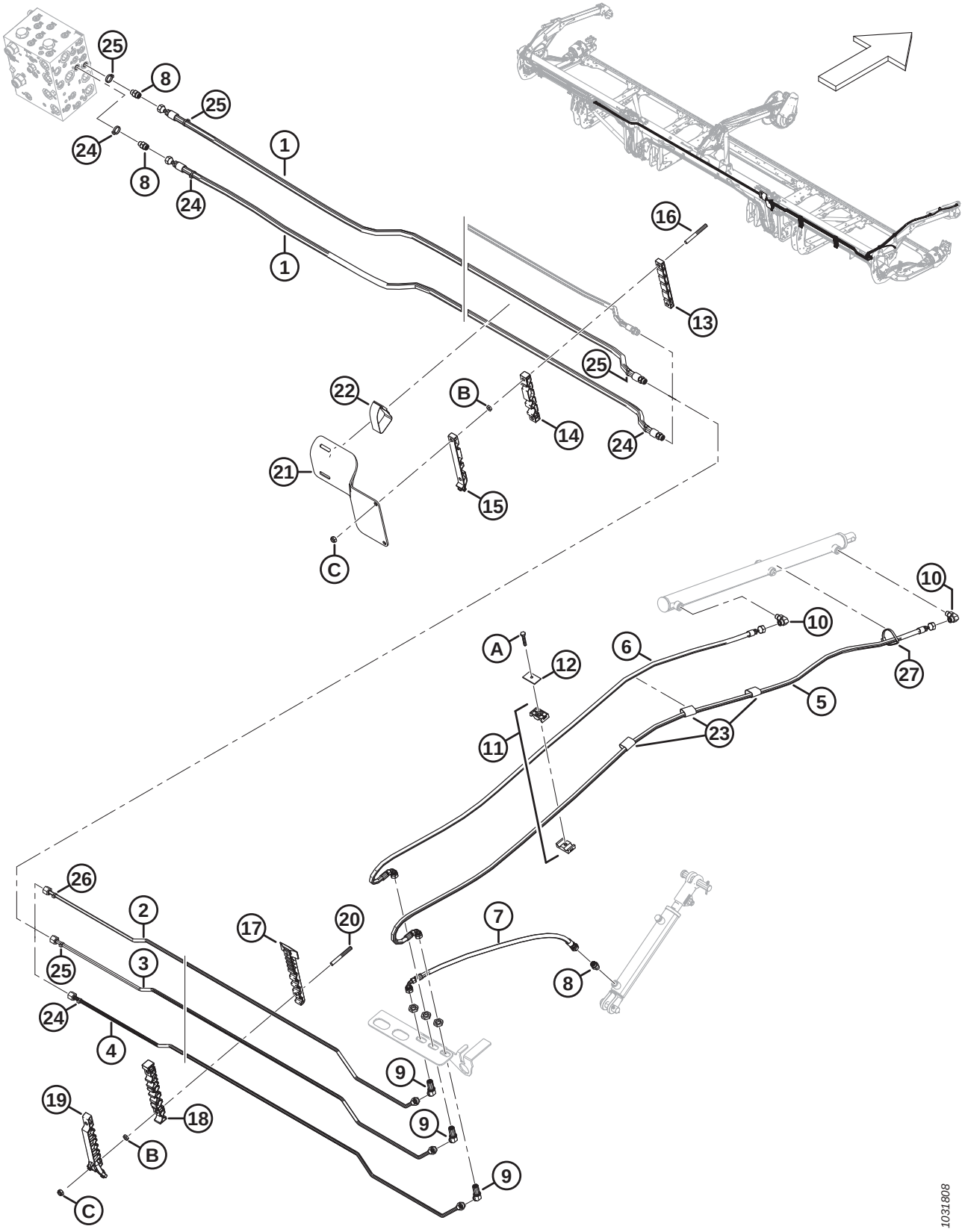

Ref	Part Number	Description	Qty	Serial Number
1	283096	HOSE – HYD	2	
	135865	O-RING – Ø1.78 X Ø9.25		
2	283078	LINE – HYDRAULIC (FD230) [309]	1	
	283145	LINE – HYDRAULIC (FD235) [310]	1	
3	283079	LINE – HYDRAULIC (FD230) [311]	1	
	283146	LINE – HYDRAULIC (FD235) [312]	1	
4	283080	LINE – HYDRAULIC (FD230) [311]	1	
	283147	LINE – HYDRAULIC (FD235) [312]	1	
5	283074	HOSE – HYD	1	
6	283075	HOSE – HYD	1	
7	283059	HOSE – HYD	1	
8	135778	FITTING – ADAPTER	3	
9	136146	FITTING – ELBOW 45° BLKHD HYD [313]	3	
10	136095	FITTING – ELBOW 90° HYD	2	
11	232395	CLAMP – ASSY [314]	2	
12	184303	CLAMP – COVER PLATE	2	
13	283906	CLAMP – LINE TOP FLEX RH	1	
14	283907	CLAMP – LINE MIDDLE FLEX RH	1	
15	311462	CLAMP – LINE TOP FLEX RH	1	
16	312655	STUD – THRD CLAMP PATCH BLACK	2	
17	283820	CLAMP – LINE BOTTOM RH [315]		
18	283818	CLAMP – LINE MIDDLE RH [315]		
19	311451	CLAMP – LINE TOP RH [315]		
20	312654	STUD – THRD CLAMP PATCH WING [316]		
21	311360	SHIELD – HOSE TRANSITION RH	1	
22	170851	CINCH STRAP – 10 IN. LG	1	
23	135443	CINCH STRAP – 4 IN. LG	3	
24	49227	FASTENER – CABLE TIE, GREEN	4	
25	135266	FASTENER – CABLE TIE, LIGHT BLUE	4	
26	252794	FASTENER – CABLE TIE, PURPLE	1	
27	30753	FASTENER – CABLE TIE, BLACK	1	

309. Used for FD230 headers.
310. Used for FD235 headers.
311. Used for FD230 headers.
312. Used for FD235 headers.
313. The fitting includes a securing nut (NSS).
314. The clamp assembly includes two clamp halves (NSS). It does NOT include the cover plate or hardware.
315. Quantities: FD230 = 2, FD235 = 3.
316. Quantities: FD230 = 4, FD235 = 6.

HYDRAULICS – LIFT AND FORE-AFT, DOUBLE REEL, RIGHT ARM (FD230 AND FD235)

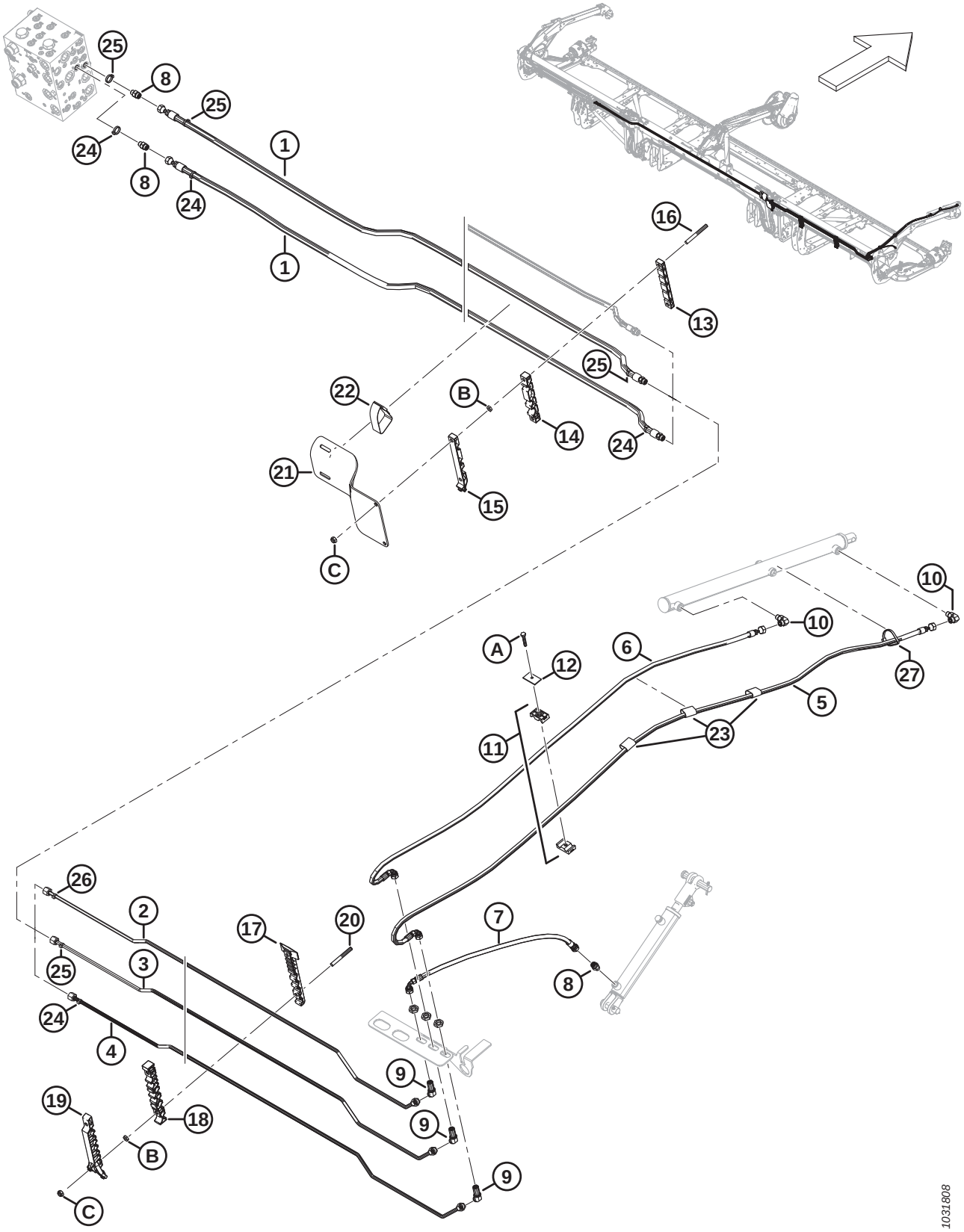

Ref	Part Number	Description	Qty	Serial Number
A	30660	BOLT – HEX HD M8 X 1.25 X 45-8.8-AA1J		
B	136442	NUT – HEX THIN M10 X 1.5-05-AA1J		
C	184692	NUT – HEX NYLOC M10 X 1.5-8-AA1J		

81 Hydraulics – Lift and Fore-Aft, Double Reel, Right Arm (FD240 and FD241)

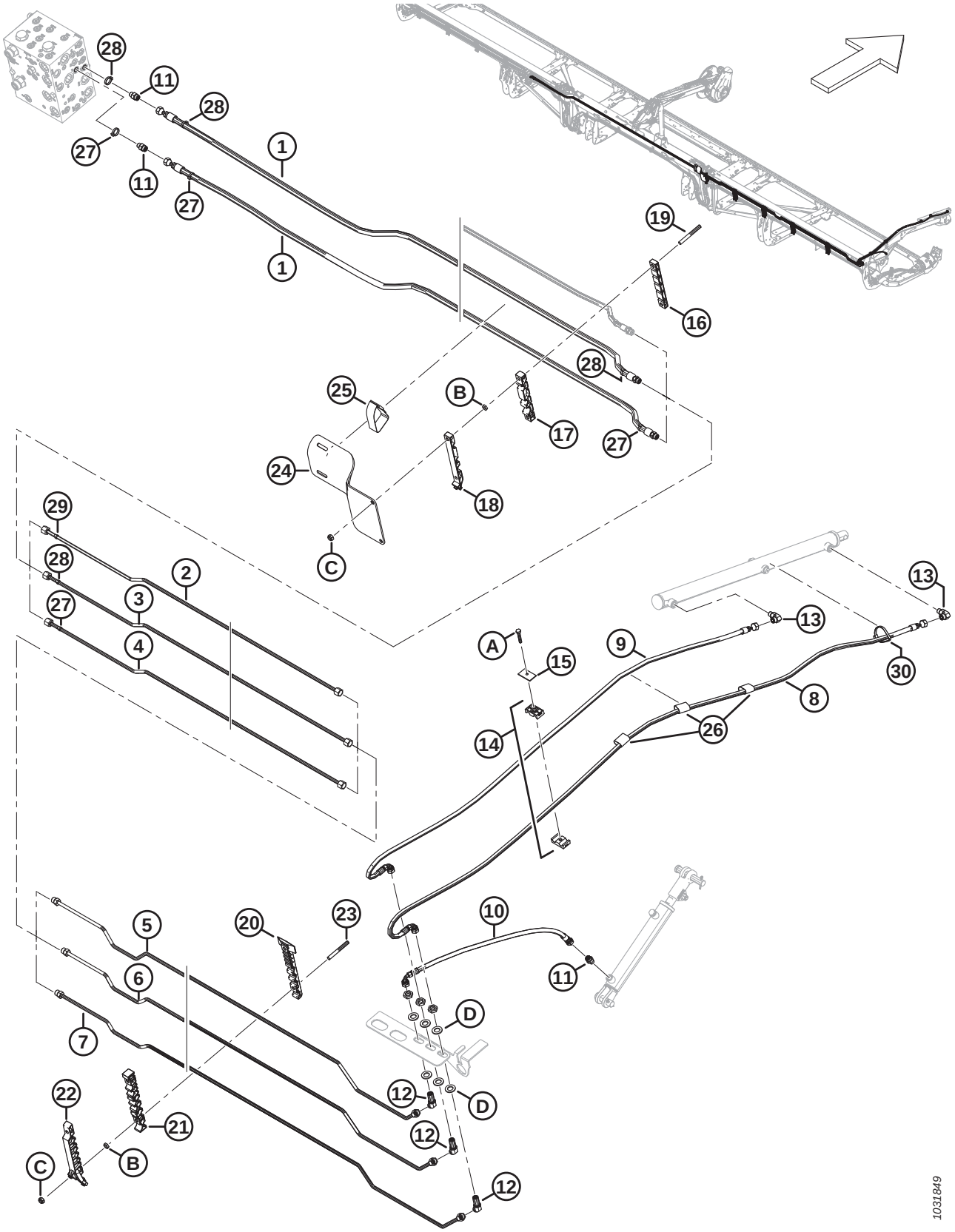

Ref	Part Number	Description	Qty	Serial Number
1	283096	HOSE – HYD	2	
	135865	O-RING – Ø1.78 X Ø9.25		
2	283428	LINE – HYDRAULIC (FD240) [317]	1	
	283184	LINE – HYDRAULIC (FD241) [318]	1	
3	283429	LINE – HYDRAULIC (FD240) [319]	1	
	283185	LINE – HYDRAULIC (FD241) [320]	1	
4	283430	LINE – HYDRAULIC (FD240) [319]	1	
	283186	LINE – HYDRAULIC (FD241) [320]	1	
5	283431	LINE – HYDRAULIC	1	
	135865	O-RING – Ø1.78 X Ø9.25		
6	283432	LINE – HYDRAULIC	1	
	135865	O-RING – Ø1.78 X Ø9.25		
7	283433	LINE – HYDRAULIC	1	
	135865	O-RING – Ø1.78 X Ø9.25		
8	283074	HOSE – HYD	1	
9	283075	HOSE – HYD	1	
10	283059	HOSE – HYD	1	
11	135778	FITTING – ADAPTER	3	
12	136146	FITTING – ELBOW 45° BLKHD HYD [321]	3	
13	136095	FITTING – ELBOW 90° HYD	2	
14	232395	CLAMP – ASSY [322]	2	
15	184303	CLAMP – COVER PLATE	2	
16	283906	CLAMP – LINE TOP FLEX RH	1	
17	283907	CLAMP – LINE MIDDLE FLEX RH	1	
18	311462	CLAMP – LINE TOP FLEX RH	1	
19	312655	STUD – THRD CLAMP PATCH BLACK	2	
20	283820	CLAMP – LINE BOTTOM RH [323]		
21	283818	CLAMP – LINE MIDDLE RH [323]		
22	311451	CLAMP – LINE TOP RH [323]		
23	312654	STUD – THRD CLAMP PATCH WING [324]		
24	311360	SHIELD – HOSE TRANSITION RH	1	

317. Used for FD240 headers.
318. Used for FD241 headers.
319. Used for FD240 headers.
320. Used for FD241 headers.
321. The fitting includes a securing nut (NSS).
322. The clamp assembly includes two clamp halves (NSS). It does NOT include the cover plate or hardware.
323. Quantities: FD240 = 4, FD241 = 4.
324. Quantities: FD240 = 8, FD241 = 8.

HYDRAULICS – LIFT AND FORE-AFT, DOUBLE REEL, RIGHT ARM (FD240 AND FD241)

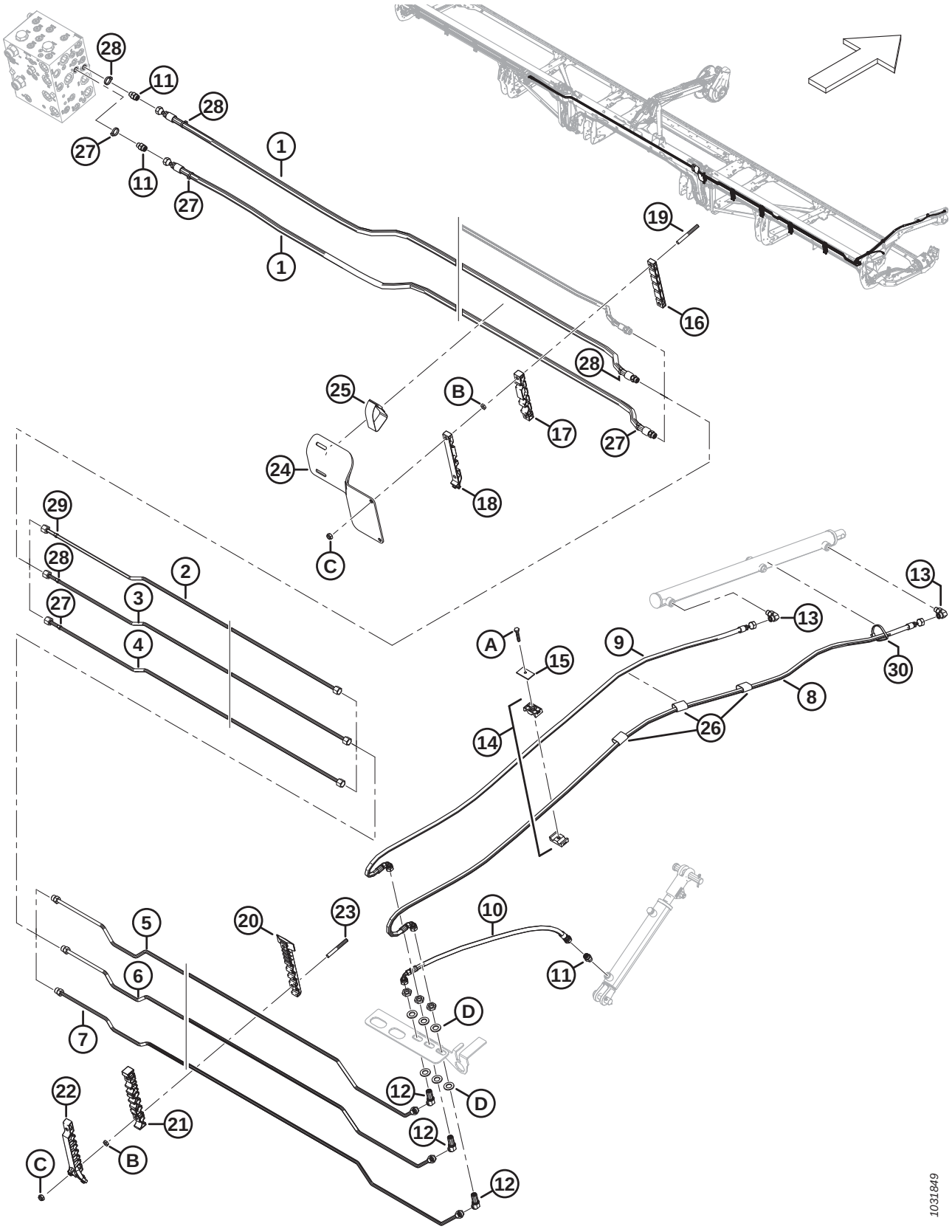

Ref	Part Number	Description	Qty	Serial Number
25	170851	CINCH STRAP – 10 IN. LG	1	
26	135443	CINCH STRAP – 4 IN. LG	3	
27	49227	FASTENER – CABLE TIE, GREEN	4	
28	135266	FASTENER – CABLE TIE, LIGHT BLUE	4	
29	252794	FASTENER – CABLE TIE, PURPLE	1	
30	30753	FASTENER – CABLE TIE, BLACK	1	
A	30660	BOLT – HEX HD M8 X 1.25 X 45-8.8-AA1J		
B	136442	NUT – HEX THIN M10 X 1.5-05-AA1J		
C	184692	NUT – HEX NYLOC M10 X 1.5-8-AA1J		
D	136540	WASHER – FLAT		

82 Hydraulics – Lift and Fore-Aft, Triple Reel, Left Arm (FD240, FD245, and FD250)

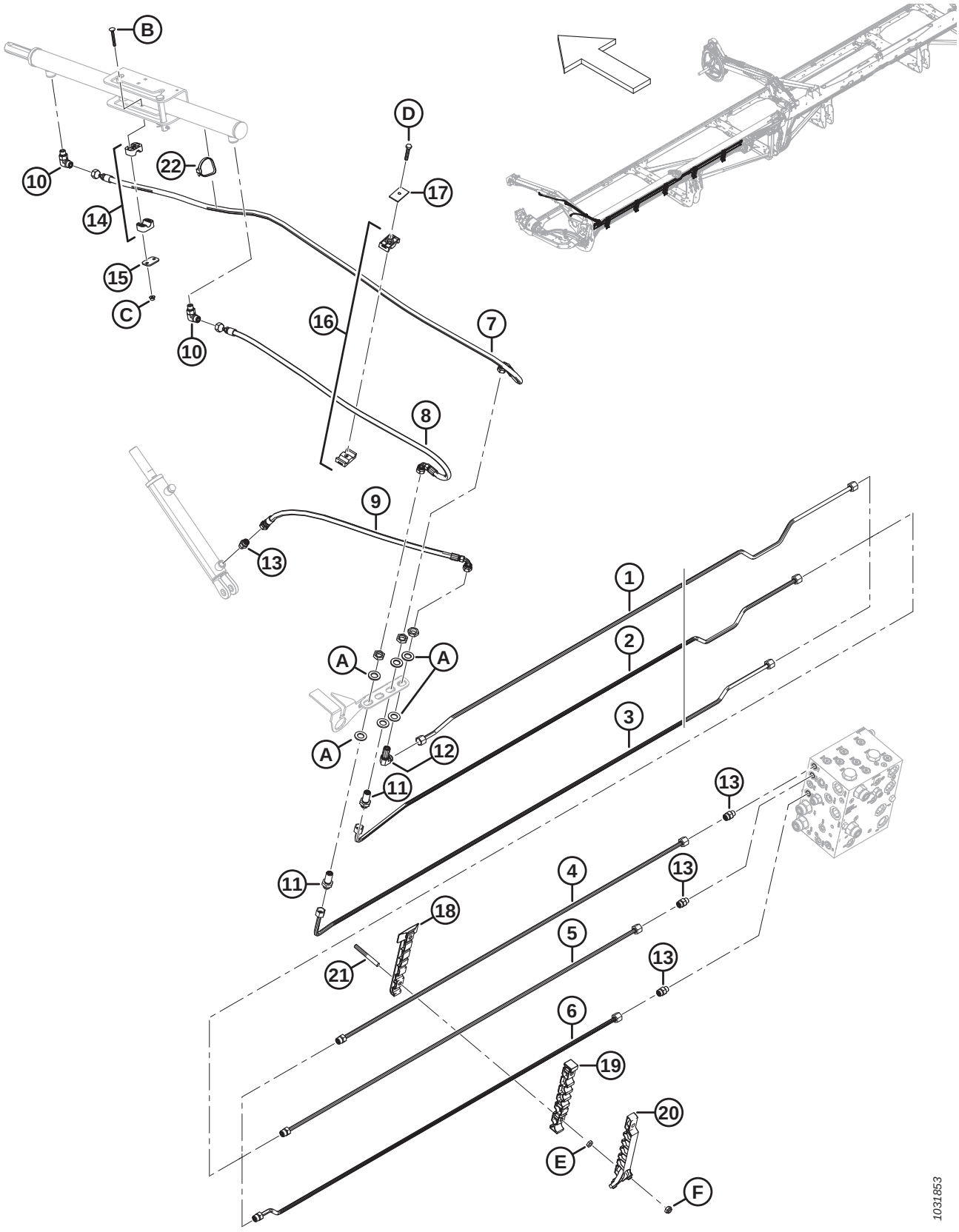

Ref	Part Number	Description	Qty	Serial Number
1	283420	LINE – HYDRAULIC (FD240 AND FD245) [325]	1	
	283824	LINE – HYDRAULIC (FD250) [326]	1	
2	283419	LINE – HYDRAULIC (FD240 AND FD245) [327]	1	
	283823	LINE – HYDRAULIC (FD250) [328]	1	
3	283417	LINE – HYDRAULIC (FD240 AND FD245) [327]	1	
	283822	LINE – HYDRAULIC (FD250) [328]	1	
4	283450	LINE – HYDRAULIC (FD250) [328]	1	
	135865	O-RING – Ø1.78 X Ø9.25		
5	283449	LINE – HYDRAULIC (FD250) [328]	1	
	135865	O-RING – Ø1.78 X Ø9.25		
6	283447	LINE – HYDRAULIC (FD250) [328]	1	
	135865	O-RING – Ø1.78 X Ø9.25		
7	283057	HOSE – HYD	1	
8	283058	HOSE – HYD	1	
9	283059	HOSE – HYD	1	
10	136095	FITTING – ELBOW 90° HYD	2	
11	136145	FITTING – BULKHEAD UNION HYD [329]	2	
12	136150	FITTING – ELBOW 90° BLKHD HYD [329]	1	
13	135778	FITTING – ADAPTER	4	
14	283791	CLAMP – ASSY [330]	1	
15	255461	PLATE – COVER	1	
16	232395	CLAMP – ASSY [330]	1	
17	184303	CLAMP – COVER PLATE	1	
18	283797	CLAMP – LINE BOTTOM LH	5	
19	283807	CLAMP – LINE MIDDLE LH	5	
20	311233	CLAMP – LINE TOP LH	5	
21	312654	STUD – THRD CLAMP PATCH WING	10	
22	30753	FASTENER – CABLE TIE, BLACK	1	
A	136540	WASHER – FLAT		
B	184644	BOLT – RHSN M6 X 1 X 50-8.8-ZINC		
C	152668	NUT – HEX FLG CTR LOC M6 X 1-8		
D	30660	BOLT – HEX HD M8 X 1.25 X 45-8.8-AA1J		

325. Used for FD240 and FD245 headers.
326. Used for FD250 headers.
327. Used for FD240 and FD245 headers.
328. Used for FD250 headers.
329. The fitting includes a securing nut (NSS).
330. The clamp assembly includes two clamp halves (NSS). It does NOT include the cover plate or hardware.

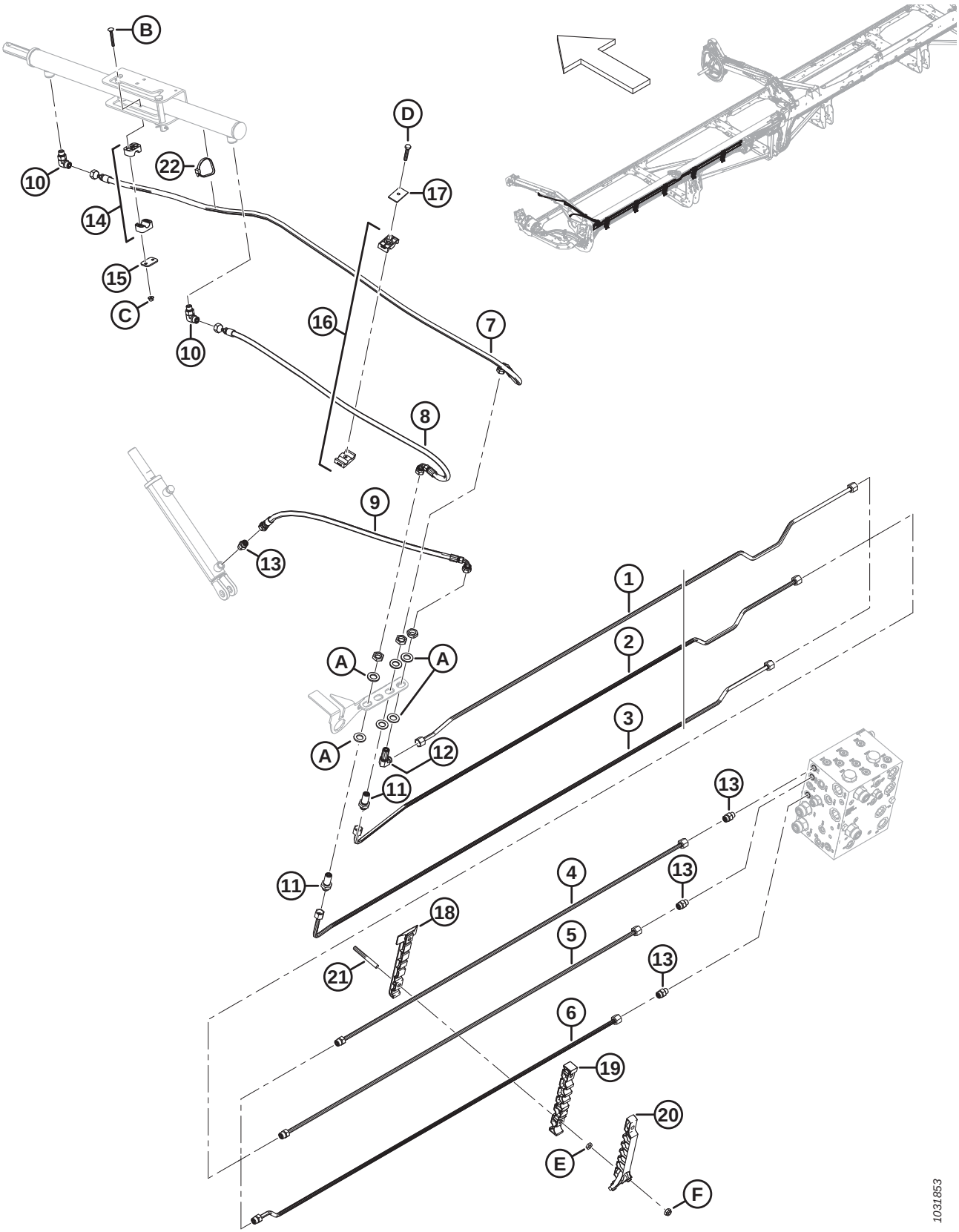
B
D
22
10
17
14
15
C
16
7
10
8
9
13
1
2
A
A
3
A
12
11
13
11
4
13
18
5
21
13
6
19
20
E
F
1031853

Ref	Part Number	Description	Qty	Serial Number
E	136442	NUT – HEX THIN M10 X 1.5-05-AA1J		
F	184692	NUT – HEX NYLOC M10 X 1.5-8-AA1J		

83 Hydraulics – Lift and Fore-Aft, Triple Reel, Center Arm, Left Side (FD240, FD245, and FD250)

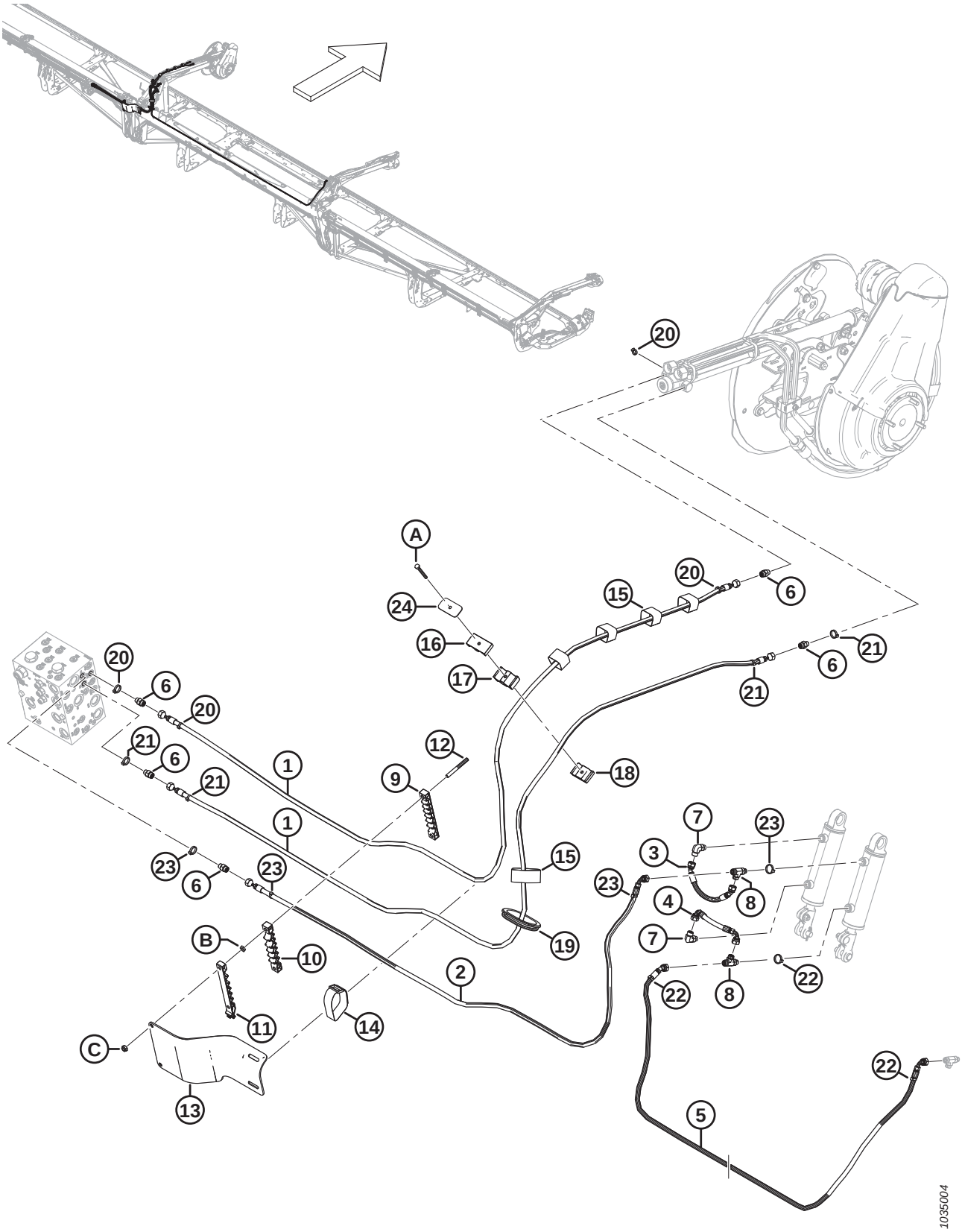

Ref	Part Number	Description	Qty	Serial Number
1	323665	HOSE – HYD	2	
2	323666	HOSE – HYD	1	
3	283785	HOSE – HYD	1	
4	283786	HOSE – HYD	1	
5	323670	HOSE – HYD (FD240) [331]	1	
	323673	HOSE – HYD (FD245 AND FD250) [332]	1	
6	135778	FITTING – ADAPTER	5	
7	136095	FITTING – ELBOW 90° HYD	2	
8	136240	FITTING – TEE HYD	2	
9	283909	CLAMP – LINE BOTTOM FLEX LH	1	
10	283910	CLAMP – LINE MIDDLE FLEX LH	1	
11	311461	CLAMP – LINE TOP FLEX LH	1	
12	312655	STUD – THRD CLAMP PATCH BLACK	2	
13	311354	SHIELD – HOSE TRANSITION LH	1	
14	295929	CINCH STRAP – 12 IN. LG	1	
15	135444	CINCH STRAP – 6 IN. LG	5	
16	283989	CLAMP – HOSE REEL TOP	1	
17	283988	CLAMP – HOSE REEL MIDDLE	1	
18	283987	CLAMP – HOSE REEL BOTTOM	1	
19	125377	GROMMET – 91 MM I.D.	1	
20	40704	FASTENER – CABLE TIE, ORANGE	4	
21	40702	FASTENER – CABLE TIE, RED	4	
22	40703	FASTENER – CABLE TIE, BLUE	3	
23	21763	FASTENER – CABLE TIE, BLACK	4	
24	323023	PLATE – CLAMP CENTER REEL ARM	1	
A	184656	BOLT – HEX HD M8 X 1.25 X 70-8.8-AA1J		
B	136442	NUT – HEX THIN M10 X 1.5-05-AA1J		
C	184692	NUT – HEX NYLOC M10 X 1.5-8-AA1J		

331. Used for FD240 headers only.
332. Used for FD245 and FD250 headers only.

84 Hydraulics – Lift and Fore-Aft, Triple Reel, Center Arm, Right Side (FD240, FD245, and FD250)

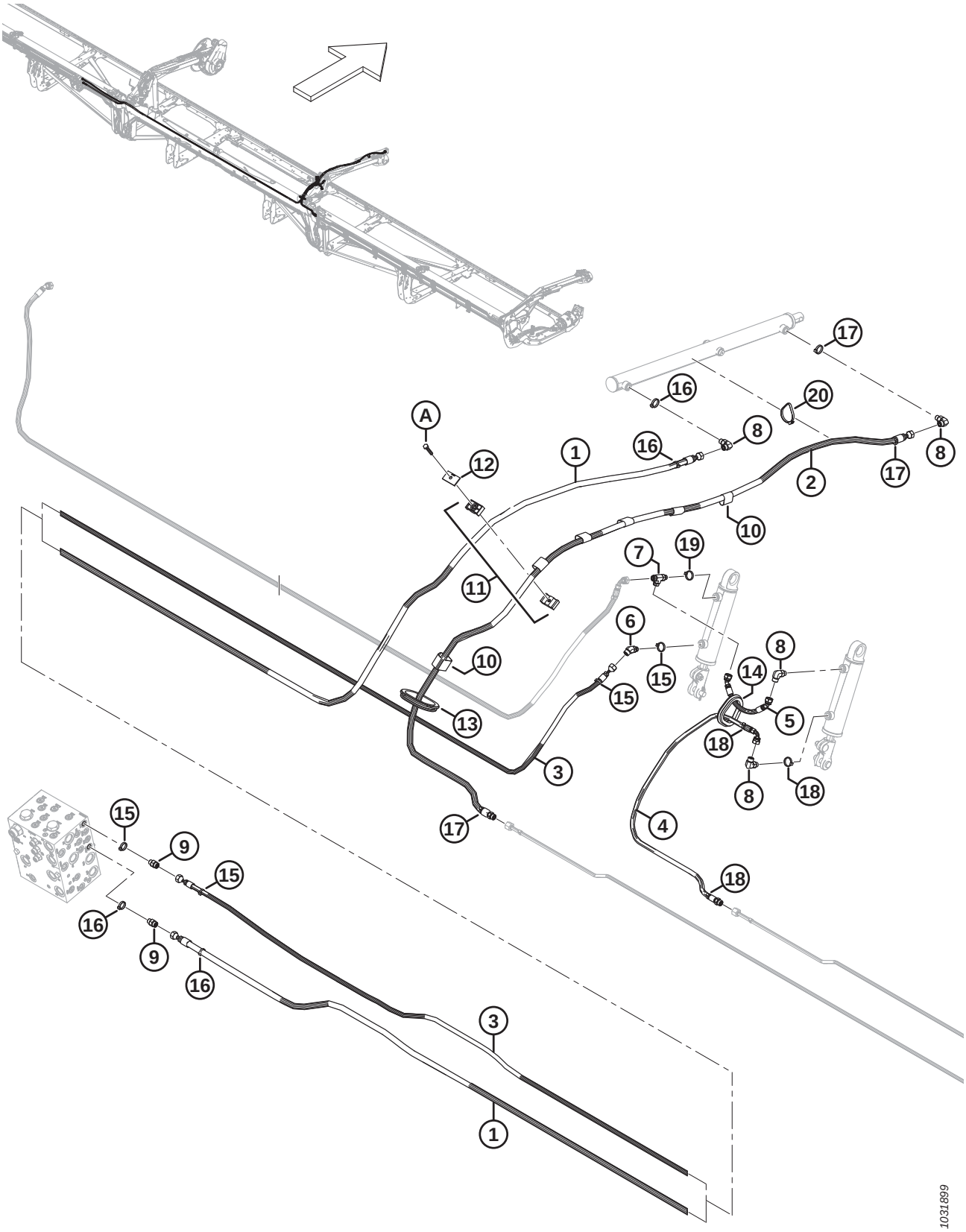

Ref	Part Number	Description	Qty	Serial Number
1	323671	HOSE – HYD (FD240) [333]	1	
	323674	HOSE – HYD (FD245 AND FD250) [334]	1	
2	323669	HOSE – HYD	1	
	135865	O-RING – Ø1.78 X Ø9.25		
3	323664	HOSE – HYD (FD240) [335]	1	
	323672	HOSE – HYD (FD245 AND FD250) [336]	1	
4	323668	HOSE – HYD	1	
	135865	O-RING – Ø1.78 X Ø9.25		
5	283785	HOSE – HYD	1	
6	136144	FITTING – ELBOW 45° HYD	1	
7	136240	FITTING – TEE HYD	1	
8	136095	FITTING – ELBOW 90° HYD	4	
9	135778	FITTING – ADAPTER	2	
10	135443	CINCH STRAP – 4 IN. LG	6	
11	232395	CLAMP – ASSY [337]	1	
12	184303	PLATE – COVER	1	
13	125377	GROMMET – 91 MM I.D.	1	
14	283889	GROMMET – RUBBER	1	
15	252795	FASTENER – CABLE TIE, PINK	4	
16	135226	FASTENER – CABLE TIE, LIGHT BLUE	4	
17	40701	FASTENER – CABLE TIE, YELLOW	3	
18	252794	FASTENER – CABLE TIE, PURPLE	3	
19	40703	FASTENER – CABLE TIE, BLUE	1	
20	30753	FASTENER – CABLE TIE, BLACK	1	
A	30660	BOLT – HEX HD M8 X 1.25 X 45-8.8-AA1J		

333. Used for FD240 headers.
334. Used for FD245 and FD250 headers.
335. Used for FD240 headers.
336. Used for FD245 and FD250 headers.
337. The clamp assembly includes two clamp halves (NSS). It does NOT include the cover plate or hardware.

85 Hydraulics – Lift and Fore-Aft, Triple Reel, Right Arm (FD240, FD245, and FD250)

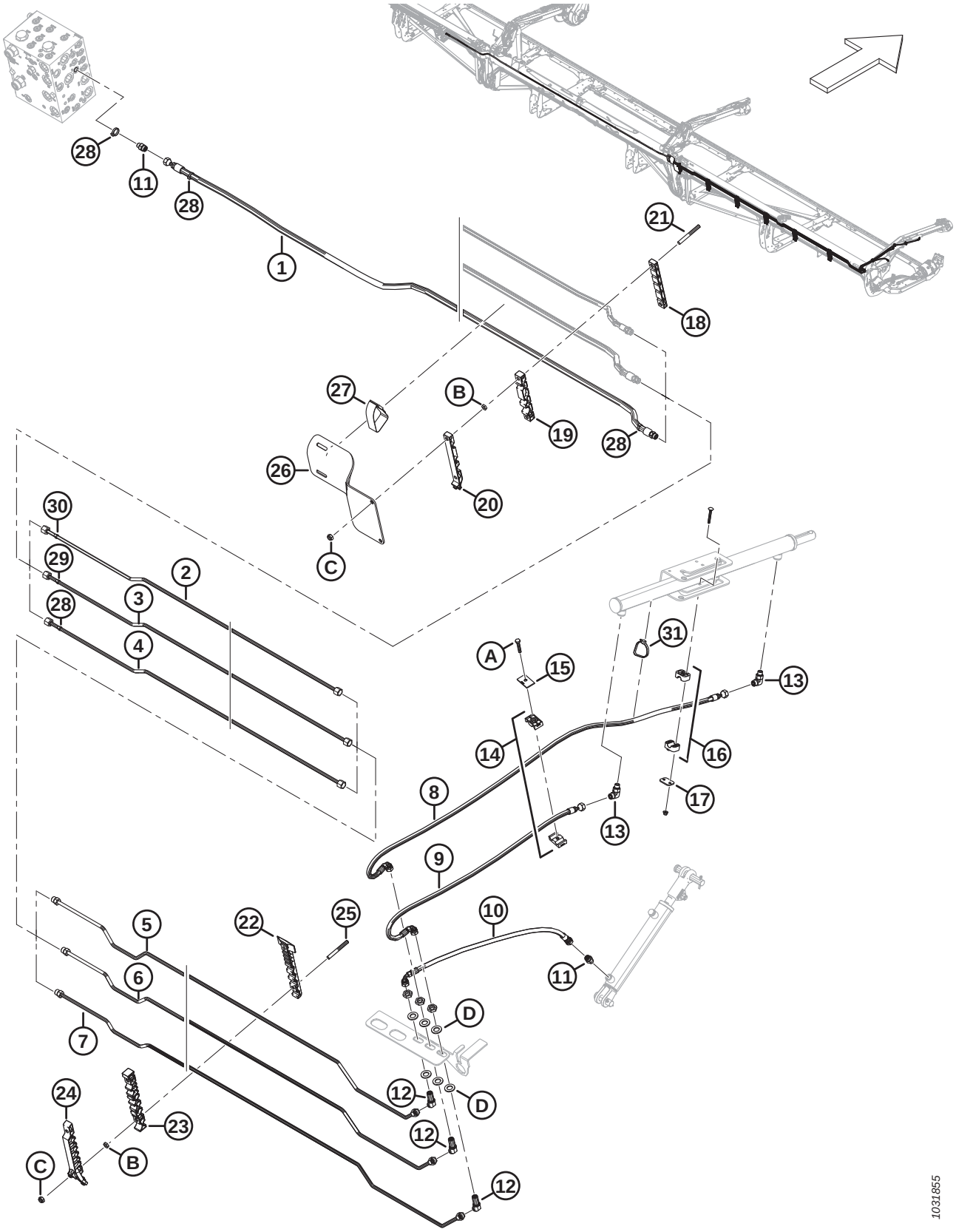

Ref	Part Number	Description	Qty	Serial Number
1	283096	HOSE – HYD (FD240) [338]	1	
	283507	HOSE – HYD (FD245 AND FD250) [339]	1	
	135865	O-RING – Ø1.78 X Ø9.25		
2	283428	LINE – HYDRAULIC (FD245 AND FD250) [340]	1	
	283451	LINE – HYDRAULIC (FD250) [341]	1	
3	283429	LINE – HYDRAULIC (FD245 AND FD250) [340]	1	
	283452	LINE – HYDRAULIC (FD250) [342]	1	
4	283430	LINE – HYDRAULIC (FD245 AND FD250) [340]	1	
	283453	LINE – HYDRAULIC (FD250) [342]	1	
5	283431	LINE – HYDRAULIC	1	
	135865	O-RING – Ø1.78 X Ø9.25		
6	283432	LINE – HYDRAULIC	1	
	135865	O-RING – Ø1.78 X Ø9.25		
7	283433	LINE – HYDRAULIC	1	
	135865	O-RING – Ø1.78 X Ø9.25		
8	283057	HOSE – HYD	1	
9	283058	HOSE – HYD	1	
10	283059	HOSE – HYD	1	
11	135778	FITTING – ADAPTER	3	
12	136146	FITTING – ELBOW 45° BLKHD HYD [343]	3	
13	136095	FITTING – ELBOW 90° HYD	2	
14	232395	CLAMP – ASSY [344]	2	
15	184303	CLAMP – COVER PLATE	2	
16	283791	CLAMP – ASSY [344]	1	
17	255461	PLATE – COVER	1	
18	283906	CLAMP – LINE TOP FLEX RH	1	
19	283907	CLAMP – LINE MIDDLE FLEX RH	1	
20	311462	CLAMP – LINE TOP FLEX RH	1	
21	312655	STUD – THRD CLAMP PATCH BLACK	2	
22	283820	CLAMP – LINE BOTTOM RH	5	
23	283818	CLAMP – LINE MIDDLE RH	5	
24	311451	CLAMP – LINE TOP RH	5	

338. Used for FD240 headers.
339. Used for FD245 and FD250 headers.
340. Used for FD245 and FD250 headers.
341. Used for FD250 headers.
342. Used for FD250 headers.
343. The fitting includes a securing nut (NSS).
344. The clamp assembly includes two clamp halves (NSS). It does NOT include the cover plate or hardware.

HYDRAULICS – LIFT AND FORE-AFT, TRIPLE REEL, RIGHT ARM (FD240, FD245, AND FD250)

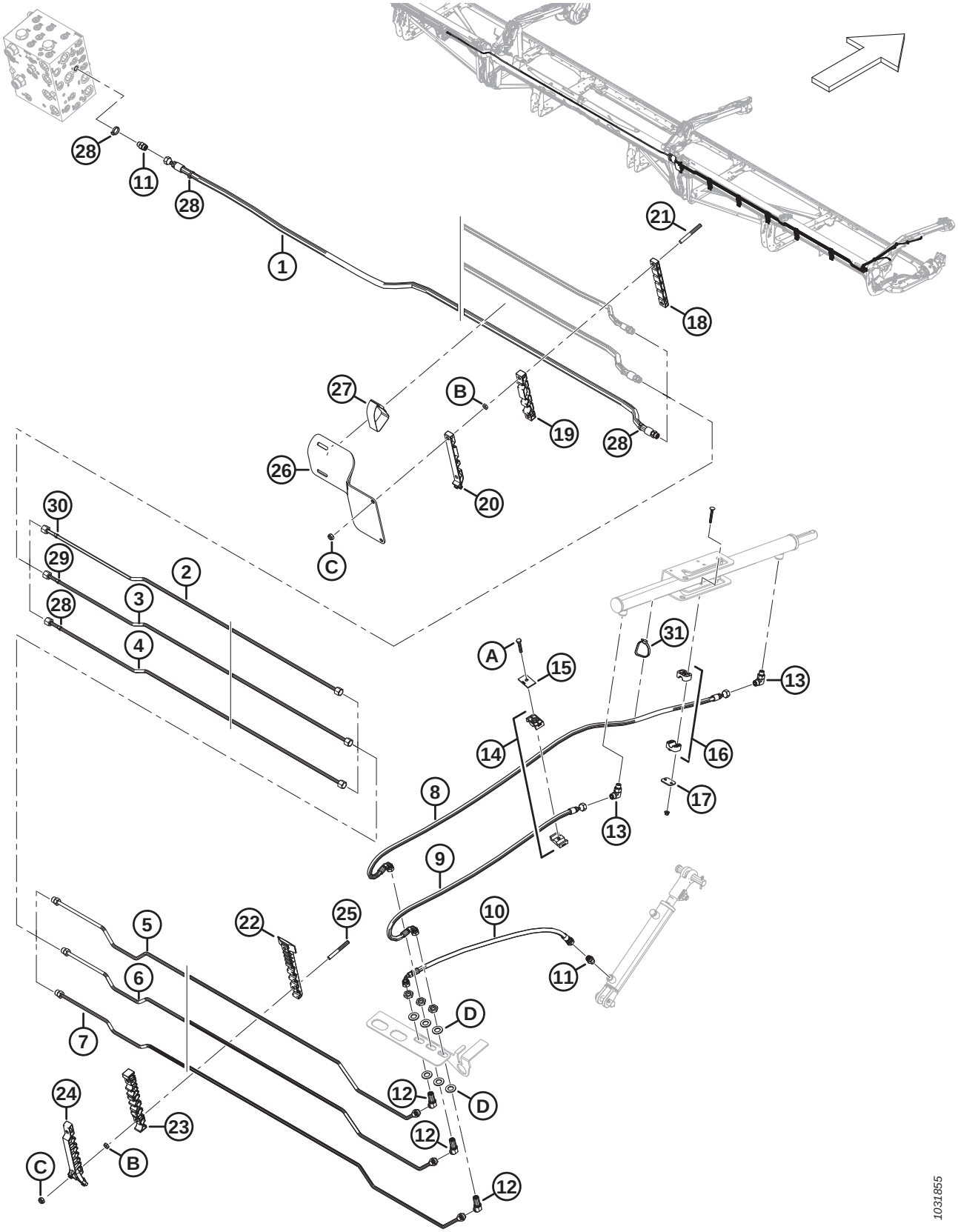

Ref	Part Number	Description	Qty	Serial Number
25	312654	STUD – THRD CLAMP PATCH WING	10	
26	311360	SHIELD – HOSE TRANSITION RH	1	
27	170851	CINCH STRAP – 10 IN. LG	1	
28	49227	FASTENER – CABLE TIE, GREEN	4	
29	40701	FASTENER – CABLE TIE, YELLOW	1	
30	252794	FASTENER – CABLE TIE, PURPLE	1	
31	30753	FASTENER – CABLE TIE, BLACK	1	
A	30660	BOLT – HEX HD M8 X 1.25 X 45-8.8-AA1J		
B	136442	NUT – HEX THIN M10 X 1.5-05-AA1J		
C	184692	NUT – HEX NYLOC M10 X 1.5-8-AA1J		
D	136540	WASHER – FLAT		

86 Hydraulics – Upper Cross Auger

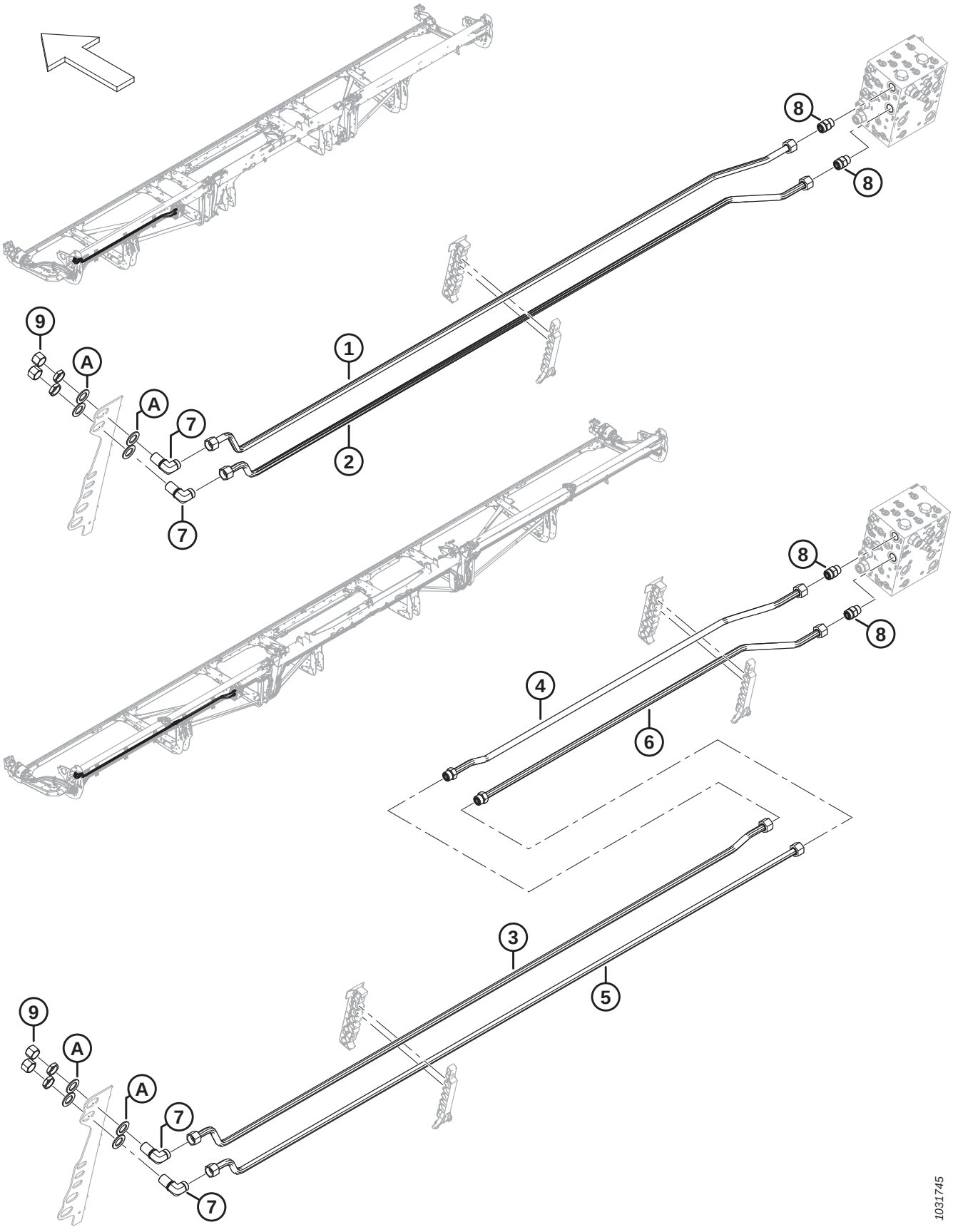

Ref	Part Number	Description	Qty	Serial Number
	B7338	KIT – 25 FT. UPPER CROSS AUGER HYDRAULICS [345]		
	B7117	KIT – 30 FT. UPPER CROSS AUGER HYDRAULICS [345]		
	B7118	KIT – 35 FT. UPPER CROSS AUGER HYDRAULICS [345]		
	B7119	KIT – 40 FT. AND 45 FT. UPPER CROSS AUGER HYDRAULICS [345]		
	B7120	KIT – 41 FT. UPPER CROSS AUGER HYDRAULICS [345]		
	B7121	KIT – 50 FT. UPPER CROSS AUGER HYDRAULICS [345]		
1	323355	LINE – HYDRAULIC (FD225) [346]	1	
	283052	LINE – HYDRAULIC (FD230) [347]	1	
	283164	LINE – HYDRAULIC (FD235) [348]	1	
	283471	LINE – HYDRAULIC (FD240 AND FD245) [349]	1	
	283462	LINE – HYDRAULIC (FD241) [350]	1	
2	323355	LINE – HYDRAULIC (FD225) [351]	1	
	283051	LINE – HYDRAULIC (FD230) [352]	1	
	283205	LINE – HYDRAULIC (FD235) [353]	1	
	283470	LINE – HYDRAULIC (FD240 AND FD245) [354]	1	
	283461	LINE – HYDRAULIC (FD241) [355]	1	
3	283469	LINE – HYDRAULIC (FD250) [356]	1	
4	283200	LINE – HYDRAULIC (FD250) [357]	1	
	135868	O-RING – Ø1.78 X Ø18.77		
5	283468	LINE – HYDRAULIC (FD250) [357]	1	
6	283199	LINE – HYDRAULIC (FD250) [357]	1	
	135868	O-RING – Ø1.78 X Ø18.77		
7	136245	FITTING – ELBOW 90° BULKHEAD HYD [358]	2	
	135868	O-RING – Ø1.78 X Ø18.77		

345. Kits are available through Whole Goods only.
346. Used for FD225 headers.
347. Used for FD230 headers.
348. Used for FD235 headers.
349. Used for FD240 and FD245 headers.
350. Used for FD241 headers.
351. Used for FD225 headers.
352. Used for FD230 headers.
353. Used for FD235 headers.
354. Used for FD240 and FD245 headers.
355. Used for FD241 headers.
356. Used for FD250 headers.
357. Used for FD250 headers.
358. The fitting includes a securing nut.

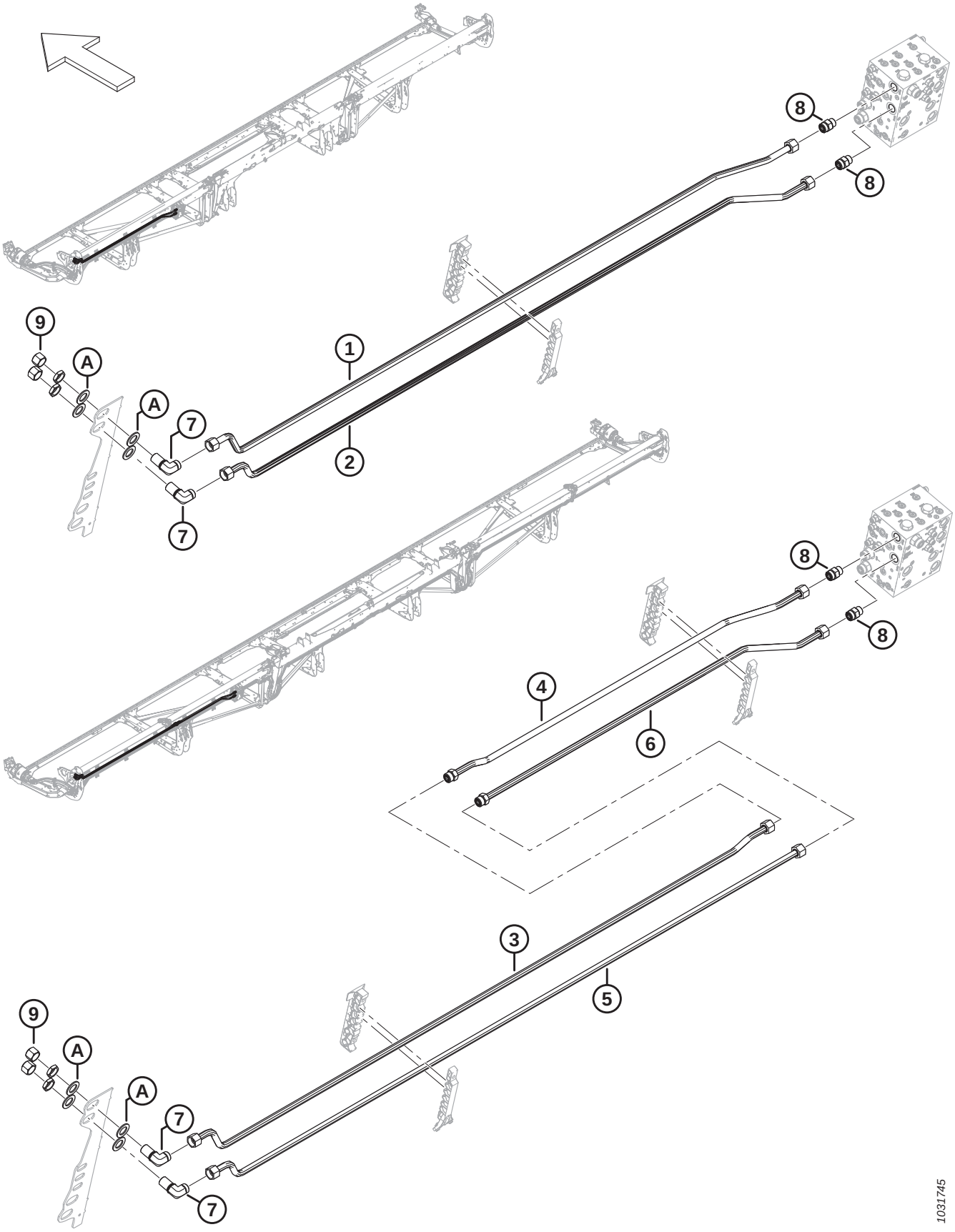
8
8
9
A
A
7
1
2
7
8
8
4
6
3
5
9
A
A
7
7
1031745

Ref	Part Number	Description	Qty	Serial Number
8	135788	FITTING – ADAPTER (UCAP, UCAR) [359]	2	
	30971	O-RING – Ø2.95 X Ø23.47		
	135868	O-RING – Ø1.78 X Ø18.77		
9	135889	CAP – HYD SAE - 12 ORFS	2	
A	136355	WASHER – FLAT 2.0 IN OD ZP	4	

359. Connects to ports UCAP and UCAR.

87 Hydraulics – Reel Drive, Single Reel

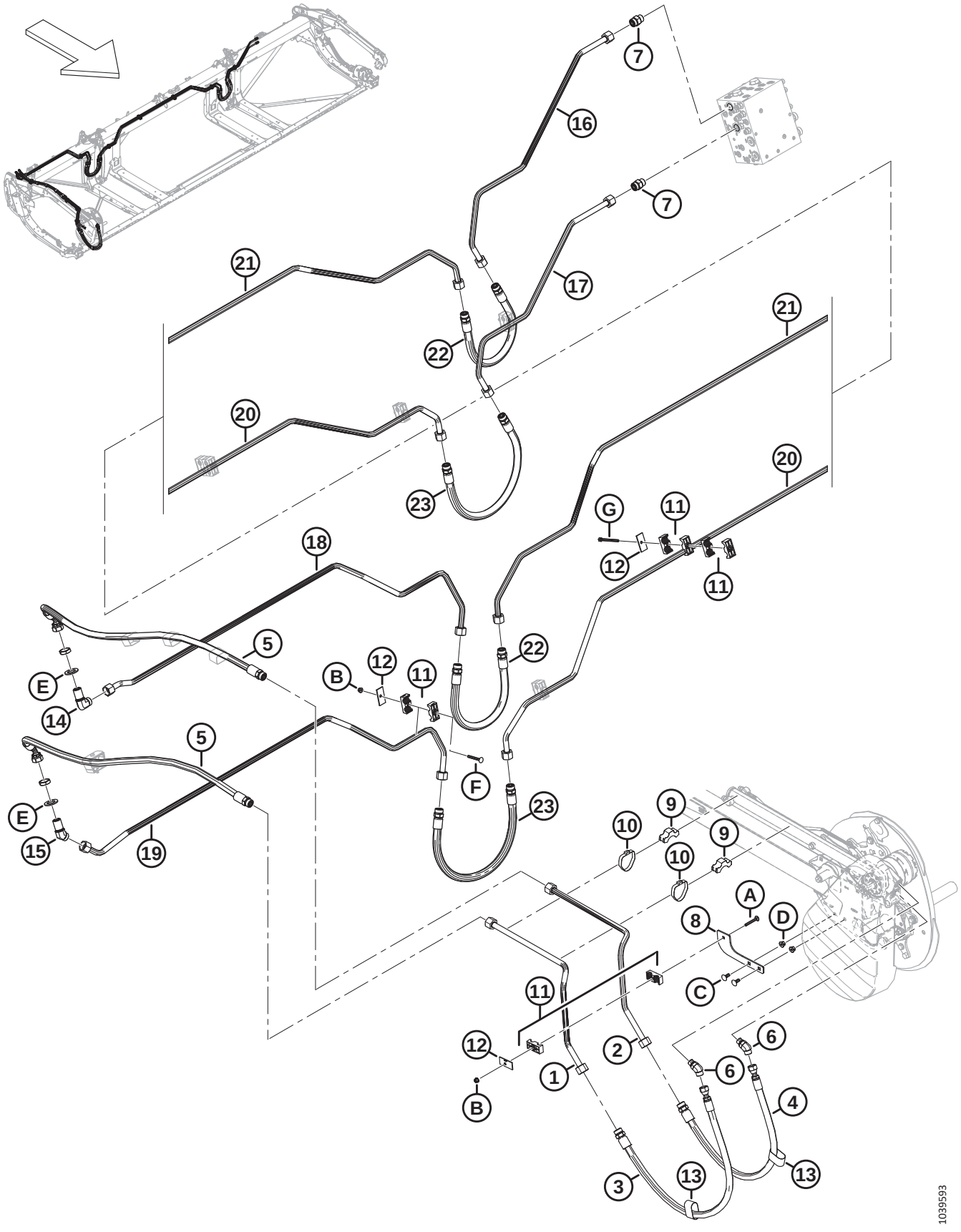

Ref	Part Number	Description	Qty	Serial Number
1	323428	LINE – HYDRAULIC	1	
2	323429	LINE – HYDRAULIC	1	
3	283092	HOSE – HYD	1	
	135868	O-RING – Ø1.78 X Ø18.77		
4	283091	HOSE – HYD	1	
	135868	O-RING – Ø1.78 X Ø18.77		
5	323519	HOSE – HYD (FD225)	2	
	135868	O-RING – Ø1.78 X Ø18.77		
6	136327	FITTING – ELBOW 45° HYD	2	
	44210	O-RING – Ø2.46 X Ø19.18		
	135867	O-RING – Ø1.78 X Ø15.60		
7	135788	FITTING – ADAPTER	2	
	30971	O-RING – Ø2.95 X Ø23.47		
	135868	O-RING – Ø1.78 X Ø18.77		
8	273285	SUPPORT – BRACKET	1	
9	232405	CLAMP – LINE	2	
10	112823	CLAMP – HOSE	2	
11	232397	CLAMP – ASSY [360]	9	
12	232233	CLAMP – COVER PLATE	7	
13	135443	CINCH STRAP 4 IN. LG	2	
14	136245	FITTING – ELBOW 90° BULKHEAD HYD [361]	1	
	135868	O-RING – Ø1.78 X Ø18.77		
15	136527	FITTING – ELBOW 45° BULKHEAD [361]	1	
	135868	O-RING – Ø1.78 X Ø18.77		
16	323346	LINE – HYDRAULIC	1	
17	323347	LINE – HYDRAULIC	1	
18	323348	LINE – HYDRAULIC	1	
19	323349	LINE – HYDRAULIC	1	
20	283035	LINE – HYDRAULIC	1	
21	283036	LINE – HYDRAULIC	1	
22	283070	HOSE – HYD	2	
23	283378	HOSE – HYD	2	
A	136486	BOLT – RHSN M8 X 1.25 X 60-8.8-AA1J		
B	135337	NUT – HEX FLG CTR LK M8 X 1.25-8-AA1J		
C	135785	BOLT – RHSN M10 X 1.5 X 25-8.8-AA1J		

360. The clamp assembly includes two clamp halves (NSS). It does NOT include the cover plate or hardware.
361. The fitting includes a securing nut (NSS).

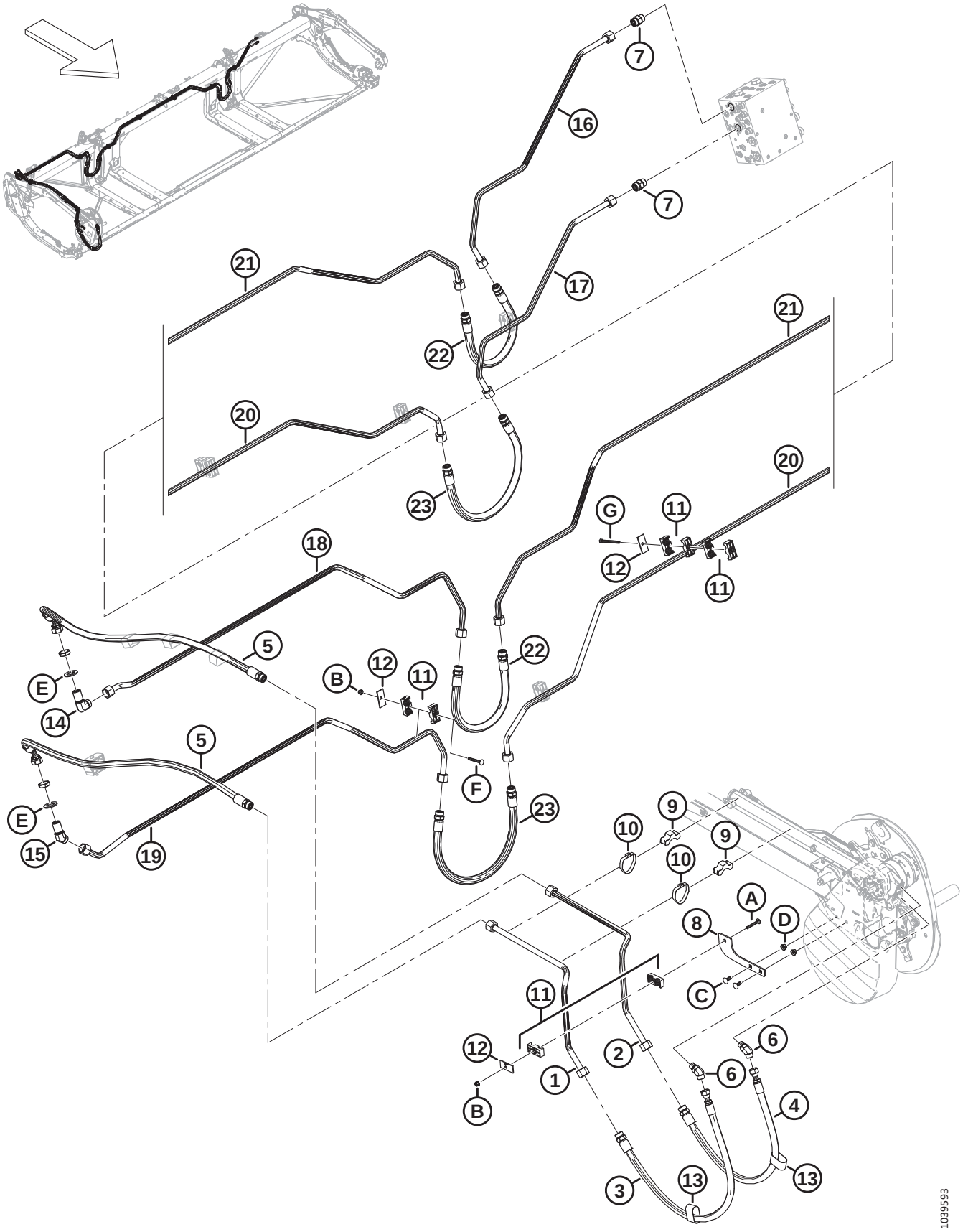
7
16
7
17
21
22
21
20
23
20
G
11
12
11
18
5
E
14
B
12
11
22
5
E
15
19
F
23
10
9
9
10
A
D
8
C
11
12
B
1
2
6
6
4
3
13
13
1039593

Ref	Part Number	Description	Qty	Serial Number
D	135799	NUT – HEX FLG CTR LOC M10 X 1.5-10		
E	136355	WASHER – FLAT 2.0 IN. OD ZP		
F	136779	BOLT – RHSN M8 X 1.25 X 70-8.8-AA1J		
G	252002	BOLT – HEX HD M8 X 1.25 X 100-8.8-AA1J [362]		

362. This bolt attaches to the header frame and does not require a nut.

88 Hydraulics – Reel Drive, Double and Triple Reel

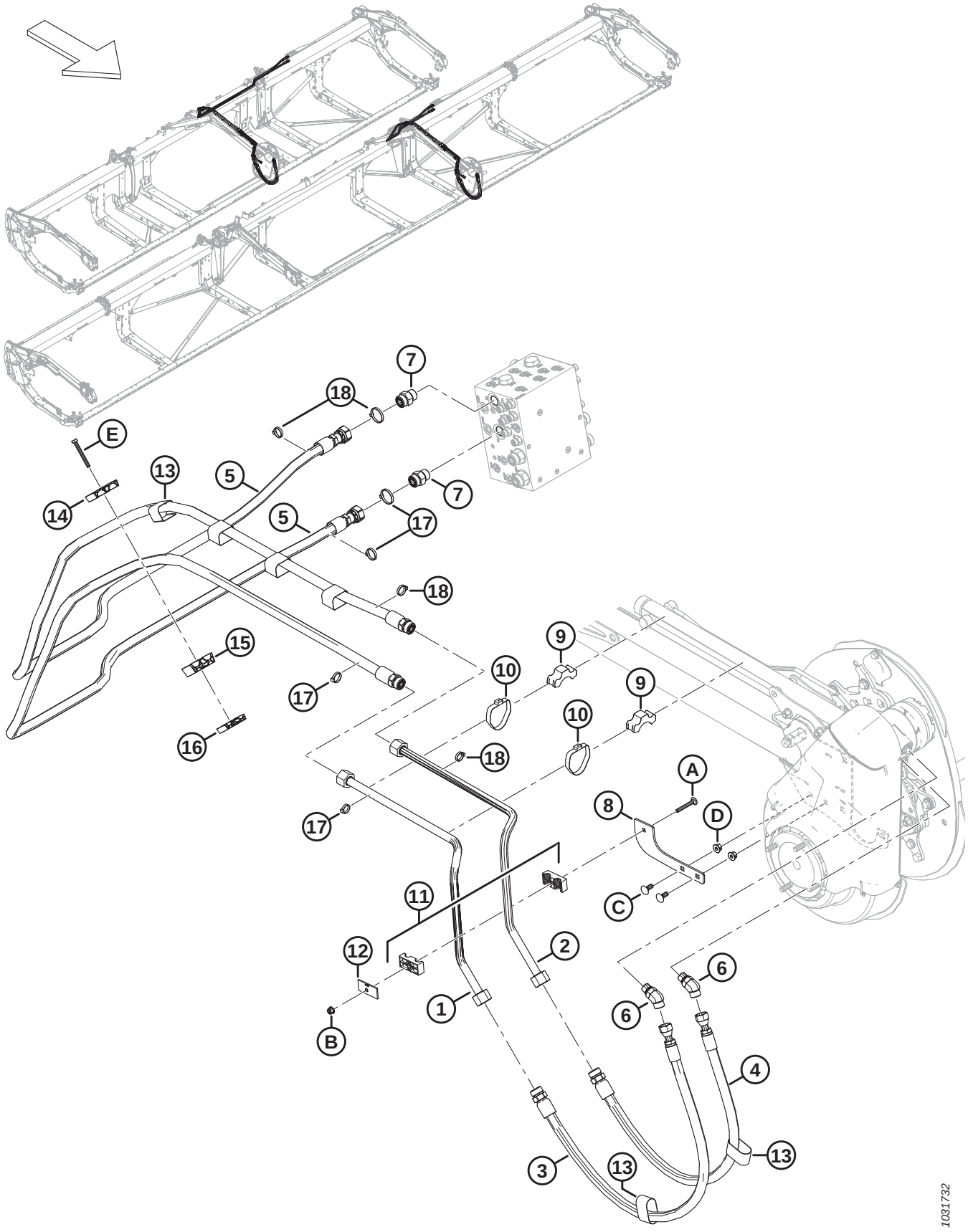

Ref	Part Number	Description	Qty	Serial Number
1	323428	LINE – HYDRAULIC	1	
	323808	KIT – REEL DRIVE STEEL LINES [363]	A/R	–451189
2	323429	LINE – HYDRAULIC	1	
	323808	KIT – REEL DRIVE STEEL LINES [363]	A/R	–451189
3	283092	HOSE – HYD	1	
	135868	O-RING – Ø1.78 X Ø18.77		
4	283091	HOSE – HYD	1	
	135868	O-RING – Ø1.78 X Ø18.77		
5	323662	HOSE – HYD (FD230, FD235, FD240, FD241) [364]	2	
	323667	HOSE – HYD (FD245, FD250) [365]	2	
	135868	O-RING – Ø1.78 X Ø18.77		
6	136327	FITTING – ELBOW 45° HYD	2	
	44210	O-RING – Ø2.46 X Ø19.18		
	135867	O-RING – Ø1.78 X Ø15.60		
7	135788	FITTING – ADAPTER	2	
	30971	O-RING – Ø2.95 X Ø23.47		
	135868	O-RING – Ø1.78 X Ø18.77		
8	273285	SUPPORT – BRACKET	1	
9	232405	CLAMP – LINE	2	
10	112823	CLAMP – HOSE	2	
11	232397	CLAMP – ASSY [366]	1	
12	232233	CLAMP – COVER PLATE	1	
13	135443	CINCH STRAP 4 IN. LG	2	
14	283989	CLAMP – HOSE REEL TOP	1	
15	283988	CLAMP – HOSE REEL MIDDLE	1	
16	283987	CLAMP – HOSE REEL BOTTOM	1	
17	40701	FASTENER – CABLE TIE, YELLOW	4	
18	49232	FASTENER – CABLE TIE, WHITE	4	
A	136486	BOLT – RHSN M8 X 1.25 X 60-8.8-AA1J		
B	135337	NUT – HEX FLG CTR LK M8 X 1.25-8-AA1J		
C	135785	BOLT – RHSN M10 X 1.5 X 25-8.8-AA1J		

363. The kit includes steel lines (MD #323428 and MD #323429) and is used to service machines built prior to model year 2023.
364. Used for FD230, FD235, FD240, and FD241 headers.
365. Used for FD245 and FD250 headers.
366. The clamp assembly includes two clamp halves (NSS). It does NOT include the cover plate or hardware.

HYDRAULICS – REEL DRIVE, DOUBLE AND TRIPLE REEL

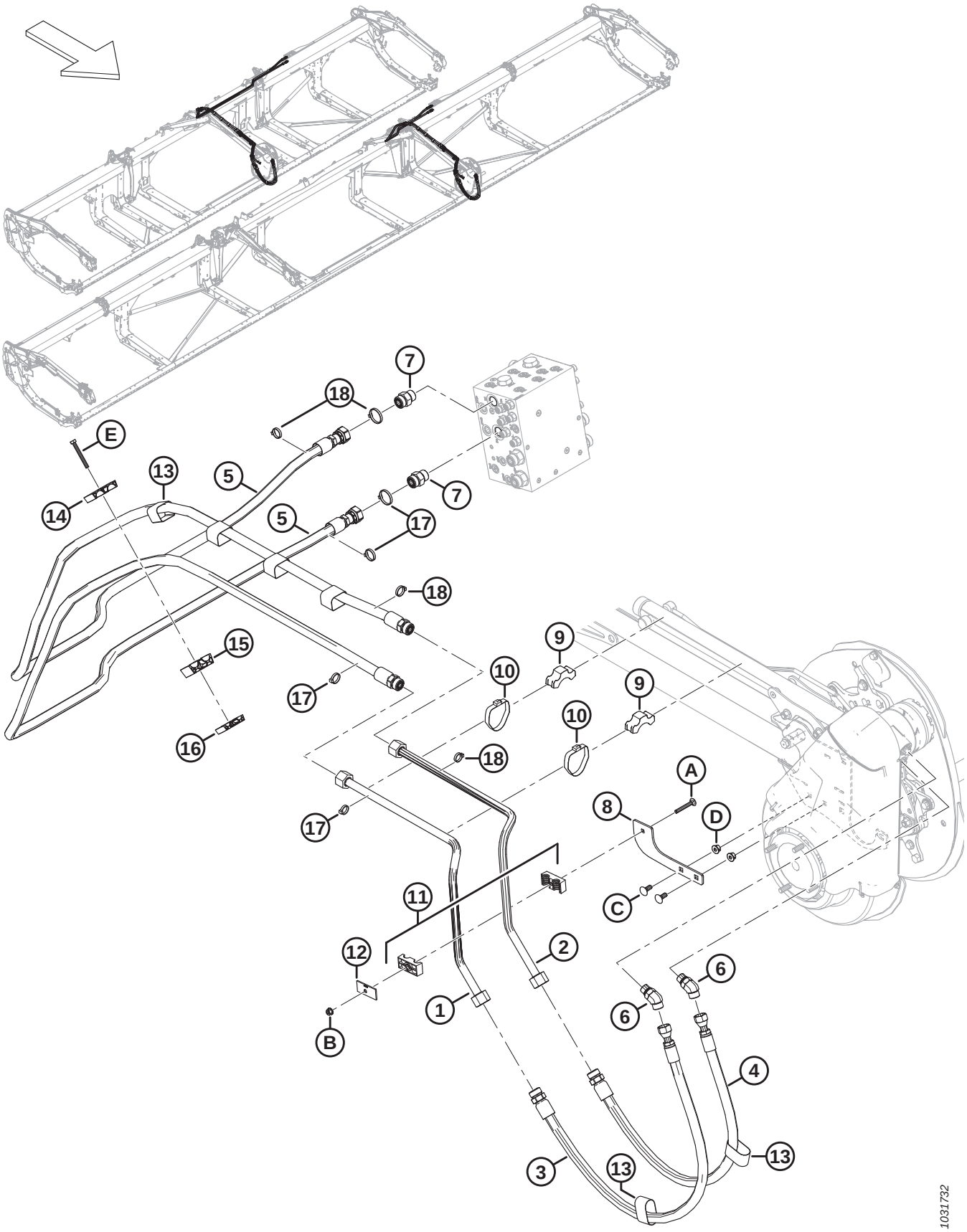

Ref	Part Number	Description	Qty	Serial Number
D	135799	NUT – HEX FLG CTR LOC M10 X 1.5-10		
E	184656	BOLT – HEX HD M8 X 1.25 X 70-8.8-AA1J		

89 Hydraulics – ContourMax™, Contour Wheels (FD225 and FD230)

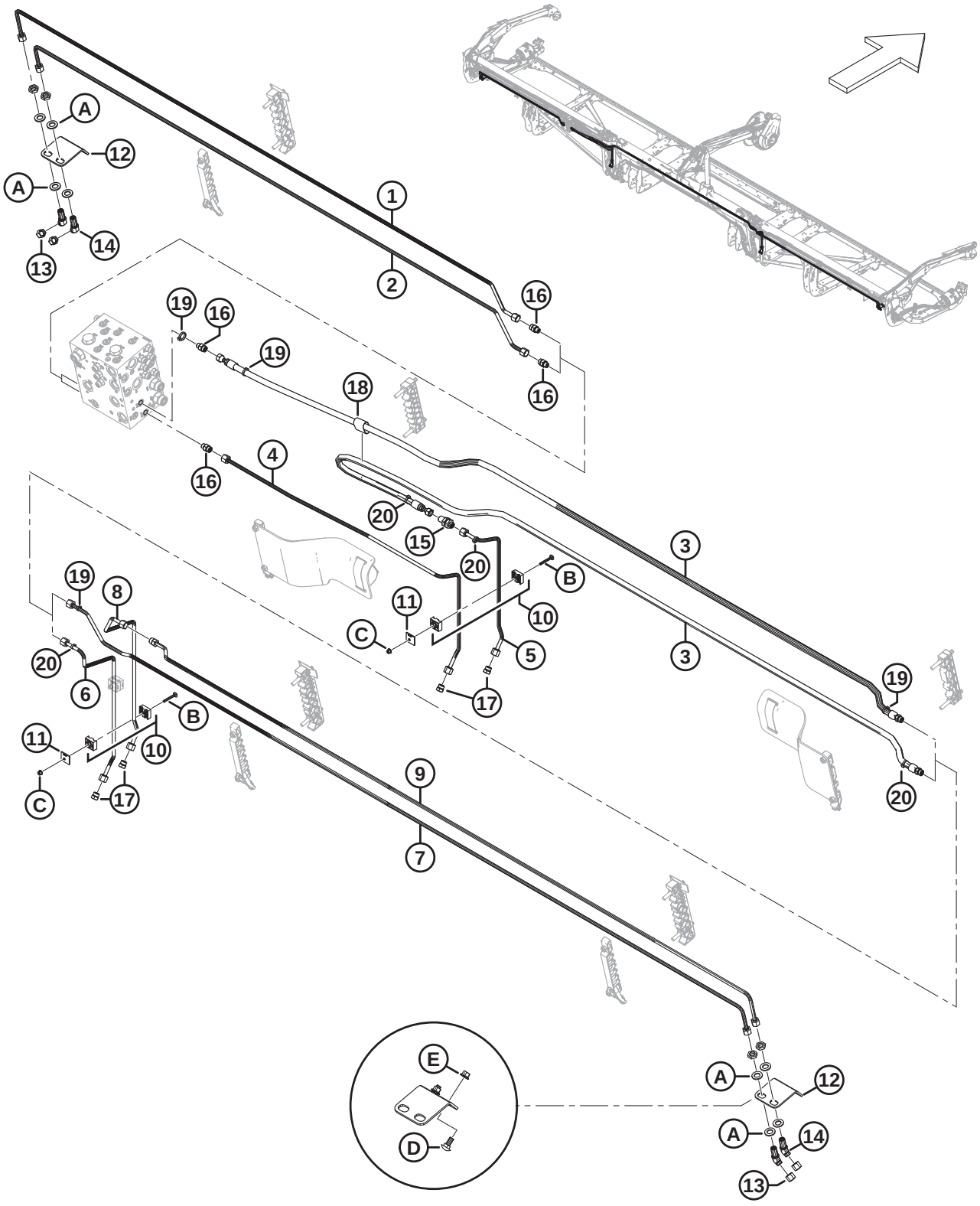

Ref	Part Number	Description	Qty	Serial Number
	B7340	KIT – 25 FT. CONTOURMAX PLUMBING PKG [367]		
	B7082	KIT – 30 FT. CONTOURMAX PLUMBING PKG. [367]		
1	323350	LINE – HYDRAULIC (FD225) [368]	1	
	313524	LINE – HYDRAULIC (FD230) [369]	1	
2	323351	LINE – HYDRAULIC (FD225) [368]	1	
	313523	LINE – HYDRAULIC (FD230) [369]	1	
3	283096	HOSE – HYD (FD225 AND FD230) [370]	2	
	135865	O-RING – Ø1.78 X Ø9.25		
4	313500	LINE – HYDRAULIC (FD225 AND FD230) [370]	1	
5	313499	LINE – HYDRAULIC (FD225 AND FD230) [370]	1	
6	283773	LINE – HYDRAULIC (FD225 AND FD230) [370]	1	
7	323353	LINE – HYDRAULIC (FD225) [368]	1	
	313526	LINE – HYDRAULIC (FD230) [369]	1	
8	313511	LINE – HYDRAULIC (FD225 AND FD230) [370]	1	
9	323352	LINE – HYDRAULIC (FD225) [368]	**1**	
	313525	LINE – HYDRAULIC (FD230) [369]	1	
	135865	O-RING – Ø1.78 X Ø9.25		
10	313496	CLAMP – ASSY [371]	3	
11	313497	PLATE – COVER CLAMP	3	
12	312134	PLATE – BULKHEAD MTG	2	
13	136325	CAP – HYD SAE-6 ORFS	4	
14	136146	FITTING – ELBOW 45° BLKHD HYD [372]	4	
	135865	O-RING – Ø1.78 X Ø9.25		
15	136145	FITTING – BULKHEAD UNION HYD	1	
	135865	O-RING – Ø1.78 X Ø9.25		
16	135778	FITTING – ADAPTER	4	
	50219	O-RING – Ø1.98 X Ø11.89		
	135865	O-RING – Ø1.78 X Ø9.25		
17	136326	PLUG – HYD SAE-6 ORFS	4	
18	135443	CINCH STRAP – 4 IN. LG	1	

367. The kit includes all listed parts to make the header ContourMax™ ready if not factory configured. You will also require bundle B7480 to complete the install; refer to Sections *110 (Option) ContourMax™ – Outer Contour Wheels, page 283* and *111 (Option) ContourMax™ – Inner Contour Wheels, page 289*. Kits are available through Whole Goods only.
368. Used for FD225 headers.
369. Used for FD230 headers.
370. Used for FD225 and FD230 headers.
371. The clamp assembly includes two clamp halves (NSS). It does NOT include the cover plate or hardware.
372. The fitting includes a securing nut (NSS).

HYDRAULICS – CONTOURMAX™, CONTOUR WHEELS (FD225 AND FD230)

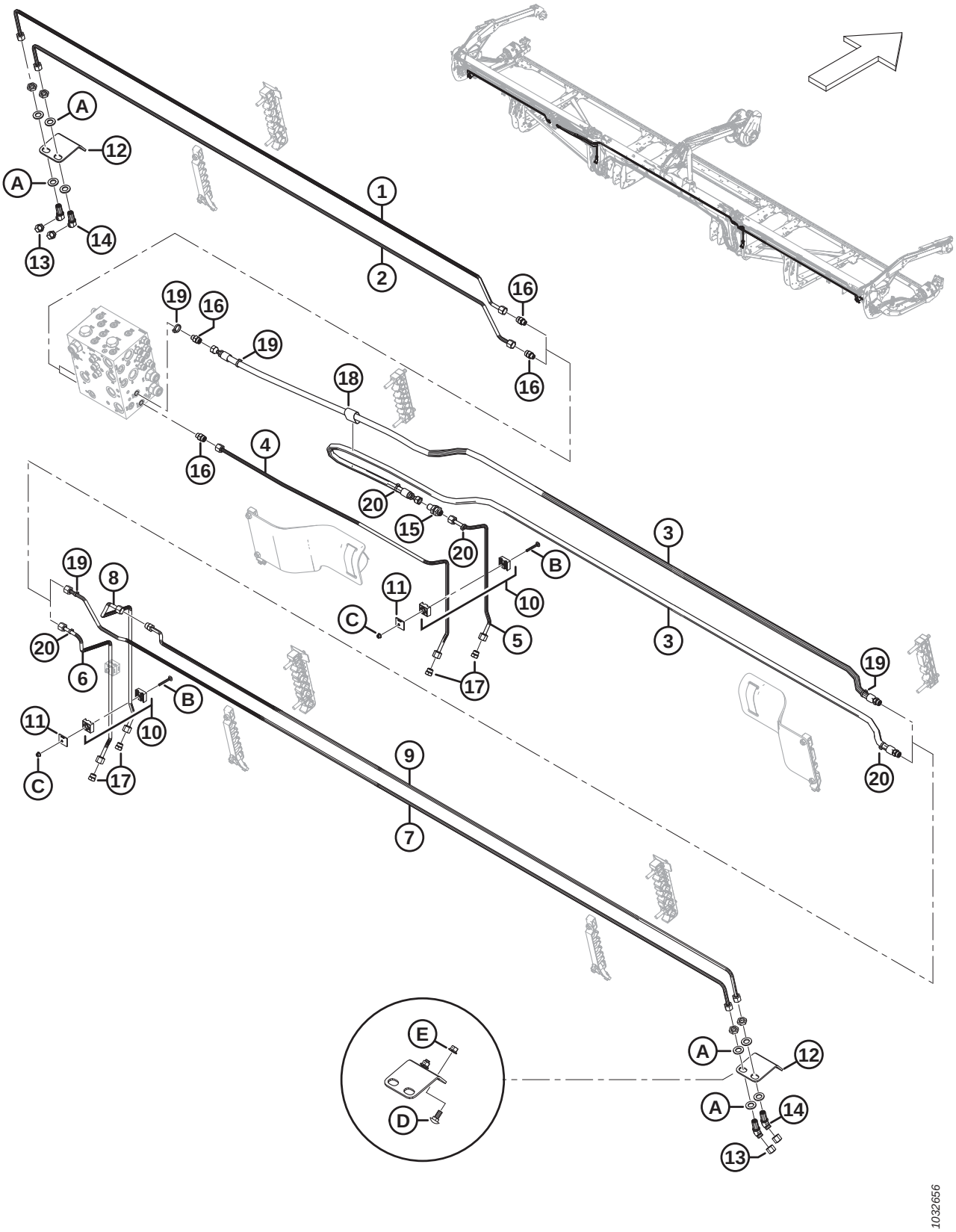

Ref	Part Number	Description	Qty	Serial Number
19	40703	FASTENER – CABLE TIE, BLUE	4	
20	40701	FASTENER – CABLE TIE, YELLOW	4	
A	136540	WASHER – FLAT		
B	184644	BOLT – RHSN M6 X 1 X 50-8.8-ZINC		
C	152668	NUT – HEX FLG CTR LOC M6 X 1-8		
D	135785	BOLT – RHSN M10 X 1.5 X 25-8.8-AA1J		
E	135799	NUT – HEX FLG CTR LOC M10 X 1.5-10		

90 Hydraulics – ContourMax™, Contour Wheels (FD235)

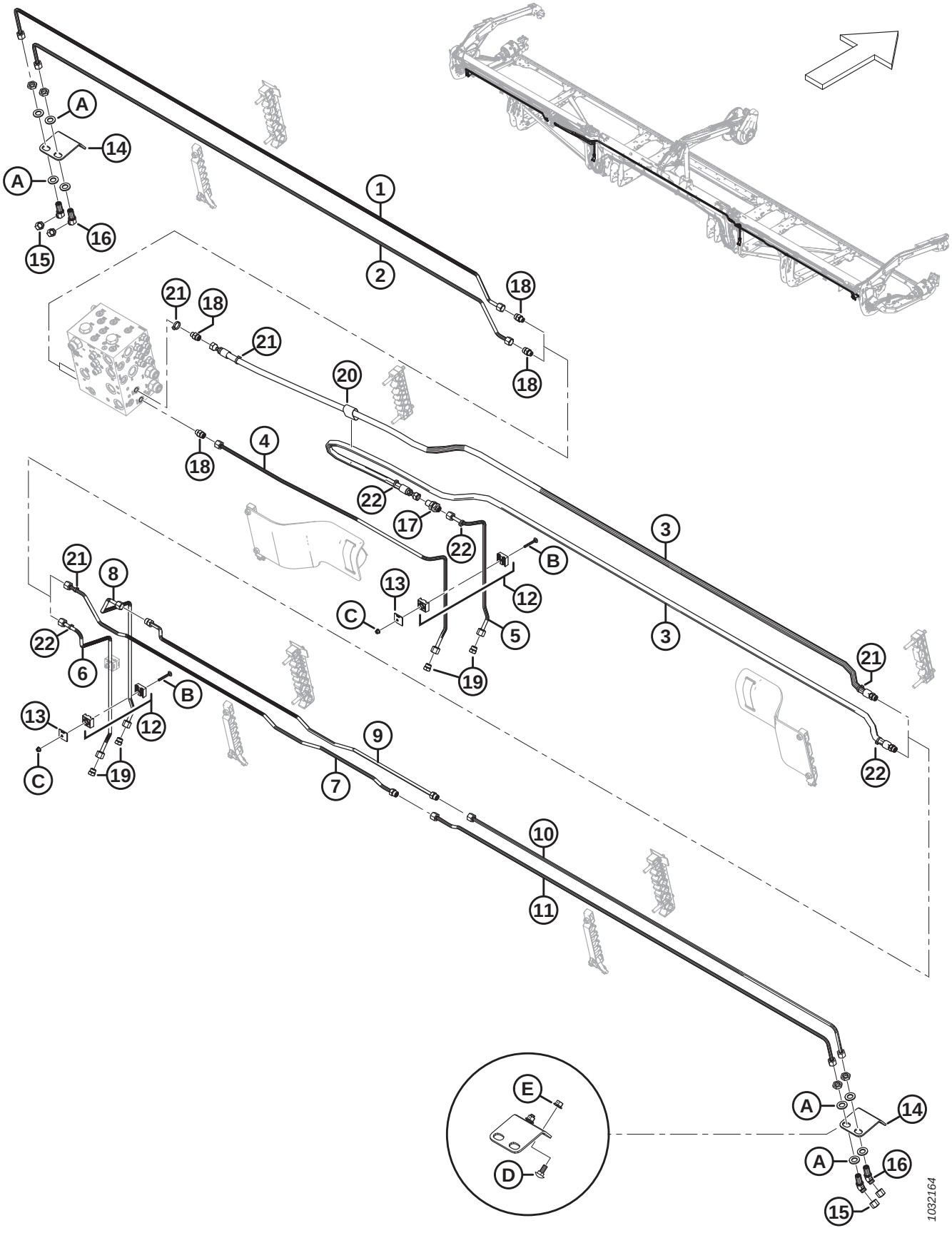

Ref	Part Number	Description	Qty	Serial Number
	B7083	KIT – 35 FT. CONTOURMAX PLUMBING PKG. [373]		
1	283017	LINE – HYDRAULIC (FD235)	1	
2	283016	LINE – HYDRAULIC (FD235)	1	
3	283096	HOSE – HYD (FD235)	2	
	135865	O-RING – Ø1.78 X Ø9.25		
4	313500	LINE – HYDRAULIC (FD235)	1	
5	313499	LINE – HYDRAULIC (FD235)	1	
6	283773	LINE – HYDRAULIC (FD235)	1	
7	323362	LINE – HYDRAULIC (FD235)	1	
	135865	O-RING – Ø1.78 X Ø9.25		
8	313511	LINE – HYDRAULIC (FD235)	1	
9	323361	LINE – HYDRAULIC (FD235)	1	
	135865	O-RING – Ø1.78 X Ø9.25		
10	283018	LINE – HYDRAULIC (FD235)	1	
11	283014	LINE – HYDRAULIC (FD235)	1	
12	313496	CLAMP – ASSY [374]	3	
13	313497	PLATE – COVER CLAMP	3	
14	312134	PLATE – BULKHEAD MTG	2	
15	136325	CAP – HYD SAE-6 ORFS	4	
16	136146	FITTING – ELBOW 45° BLKHD HYD [375]	4	
	135865	O-RING – Ø1.78 X Ø9.25		
17	136145	FITTING – BULKHEAD UNION HYD	1	
	135865	O-RING – Ø1.78 X Ø9.25		
18	135778	FITTING – ADAPTER	4	
	50219	O-RING – Ø1.98 X Ø11.89		
	135865	O-RING – Ø1.78 X Ø9.25		
19	136326	PLUG – HYD SAE-6 ORFS	4	
20	135443	CINCH STRAP – 4 IN. LG	1	
21	40703	FASTENER – CABLE TIE, BLUE	4	
22	40701	FASTENER – CABLE TIE, YELLOW	4	
A	136540	WASHER – FLAT		

373. The kit includes all listed parts to make the header ContourMax™ ready if not factory configured. You will also require bundle B7480 to complete the install; refer to Sections *110 (Option) ContourMax™ – Outer Contour Wheels, page 283* and *111 (Option) ContourMax™ – Inner Contour Wheels, page 289*. Kits are available through Whole Goods only.
374. The clamp assembly includes two clamp halves (NSS). It does NOT include the cover plate or hardware.
375. The fitting includes a securing nut (NSS).

HYDRAULICS – CONTOURMAX™, CONTOUR WHEELS (FD235)

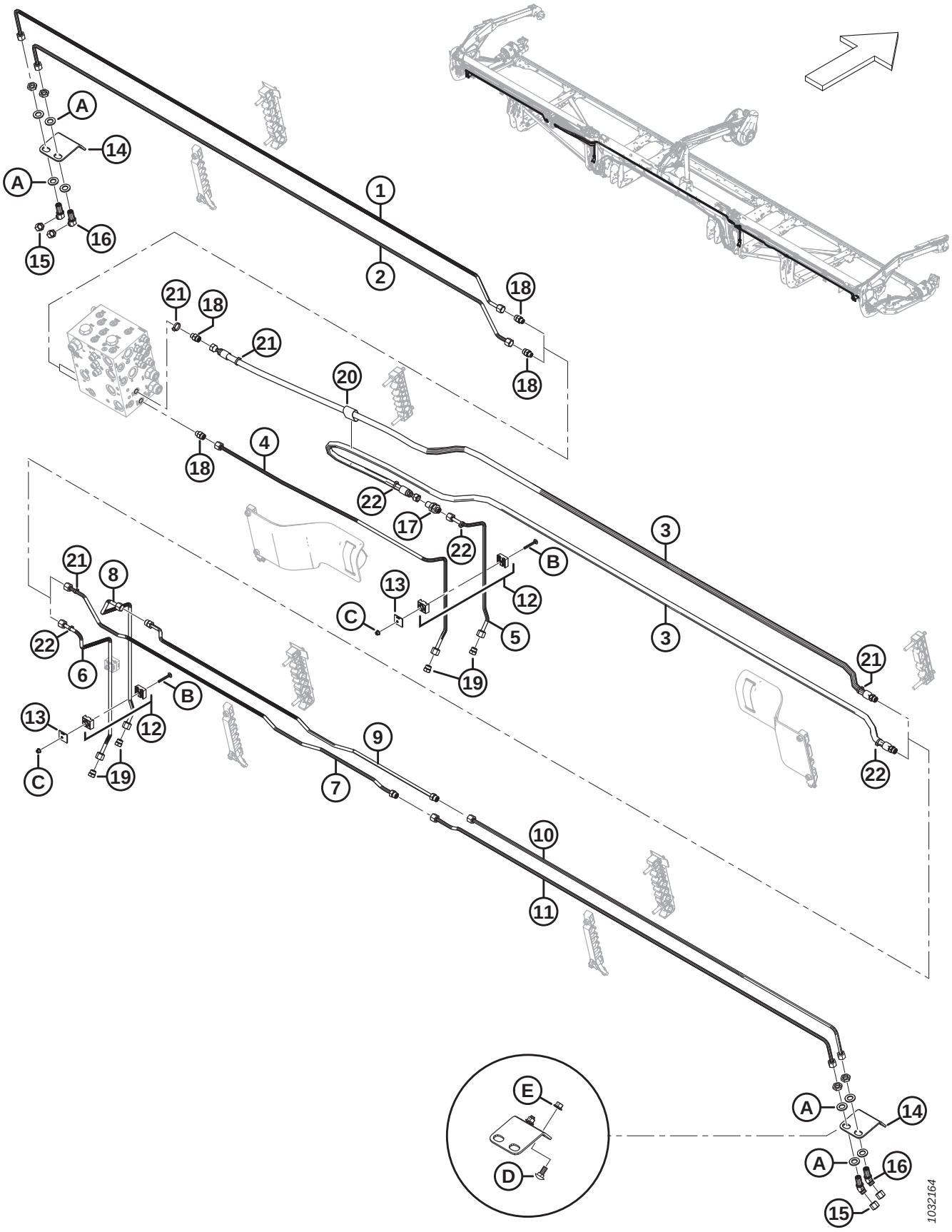

Ref	Part Number	Description	Qty	Serial Number
B	184644	BOLT – RHSN M6 X 1 X 50-8.8-ZINC		
C	152668	NUT – HEX FLG CTR LOC M6 X 1-8		
D	135785	BOLT – RHSN M10 X 1.5 X 25-8.8-AA1J		
E	135799	NUT – HEX FLG CTR LOC M10 X 1.5-10		

91 Hydraulics – ContourMax™, Contour Wheels (FD240, FD241, FD245, and FD250)

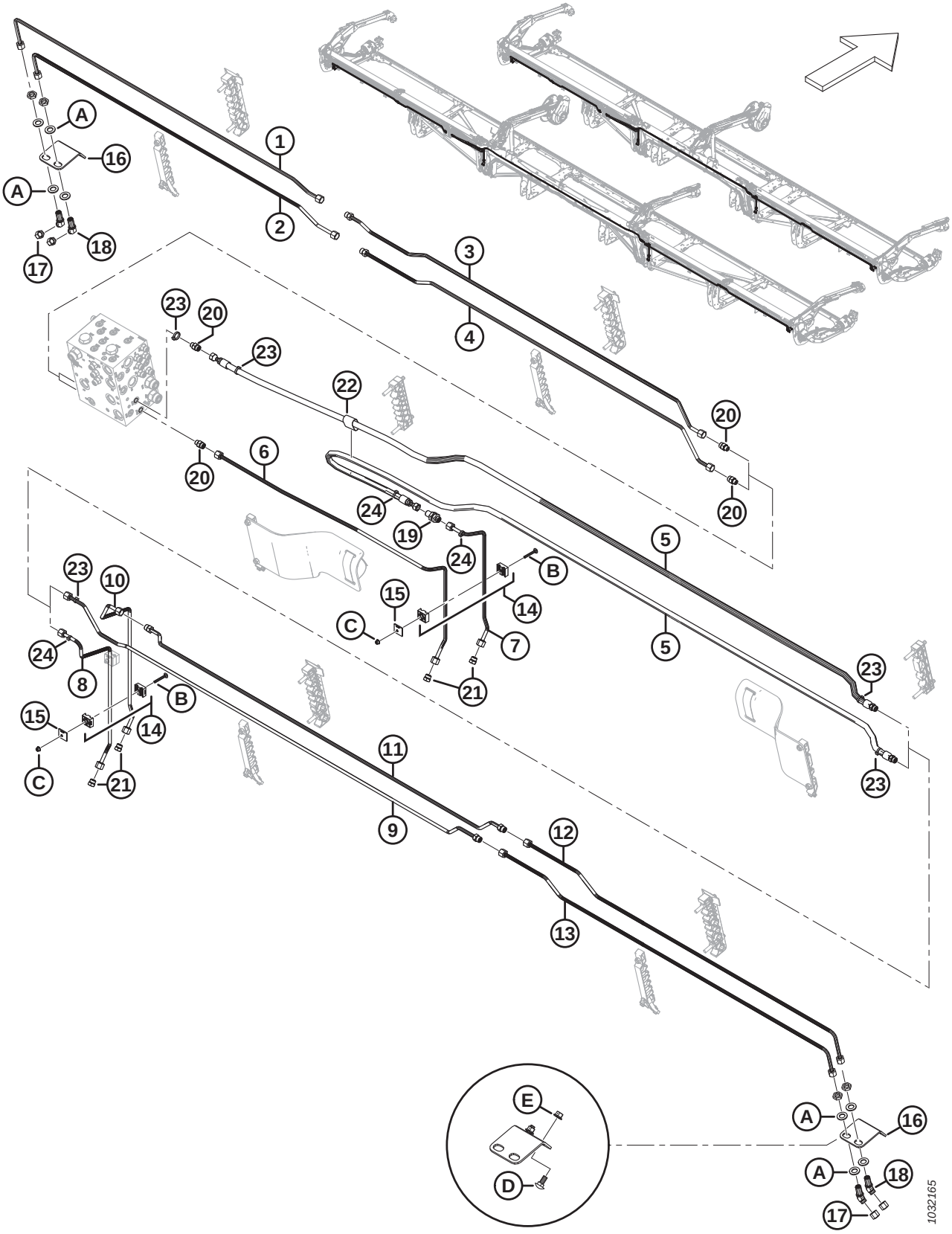

Ref	Part Number	Description	Qty	Serial Number
	B7113	KIT – 40 FT. CONTOURMAX PLUMBING PKG. [376]		
	B7114	KIT – 41 FT. CONTOURMAX PLUMBING PKG. [376]		
	B7193	KIT – 45 FT. CONTOURMAX PLUMBING PKG. [376]		
	B7116	KIT – 50 FT. CONTOURMAX PLUMBING PKG. [376]		
1	313557	LINE – HYDRAULIC (FD240 AND FD245) [377]	1	
	283837	LINE – HYDRAULIC (FD241) [378]	1	
	283833	LINE – HYDRAULIC (FD250) [379]	1	
2	313556	LINE – HYDRAULIC (FD240 AND FD245) [380]	1	
	283836	LINE – HYDRAULIC (FD241) [381]	1	
	283831	LINE – HYDRAULIC (FD250) [382]	1	
3	283832	LINE – HYDRAULIC (FD240, FD241, FD245, AND FD250)	1	
	135865	O-RING – Ø1.78 X Ø9.25		
4	283830	LINE – HYDRAULIC (FD240, FD241, FD245, AND FD250)	1	
	135865	O-RING – Ø1.78 X Ø9.25		
5	283096	HOSE – HYD (FD240, FD241) [383]	2	
	283507	HOSE – HYD (FD245 AND FD250) [384]	2	
	135865	O-RING – Ø1.78 X Ø9.25		
6	313500	LINE – HYDRAULIC (FD240, FD241, FD245, AND FD250)	1	
7	313499	LINE – HYDRAULIC (FD240, FD241, FD245, AND FD250)	1	
8	283773	LINE – HYDRAULIC (FD240, FD241, FD245, AND FD250)	1	
9	313530	LINE – HYDRAULIC (FD240 AND FD245) [380]	1	
	283839	LINE – HYDRAULIC (FD241) [381]	1	
	283012	LINE – HYDRAULIC (FD250) [382]	1	
	135865	O-RING – Ø1.78 X Ø9.25		
10	313511	LINE – HYDRAULIC (FD240, FD241, FD245, AND FD250)	1	

376. The kit includes all listed parts to make the header ContourMax™ ready if not factory configured. You will also require bundle B7480 to complete the install; refer to Sections *110 (Option) ContourMax™ – Outer Contour Wheels, page 283* and *111 (Option) ContourMax™ – Inner Contour Wheels, page 289*. Kits are available through Whole Goods only.
377. Used for FD240 and FD245 headers.
378. Used for FD241 headers.
379. Used for FD250 headers.
380. Used for FD240 and FD245 headers.
381. Used for FD241 headers.
382. Used for FD250 headers.
383. Used for FD240 and FD241 headers.
384. Used for FD245 and FD250 headers.

HYDRAULICS – CONTOURMAX™, CONTOUR WHEELS (FD240, FD241, FD245, AND FD250)

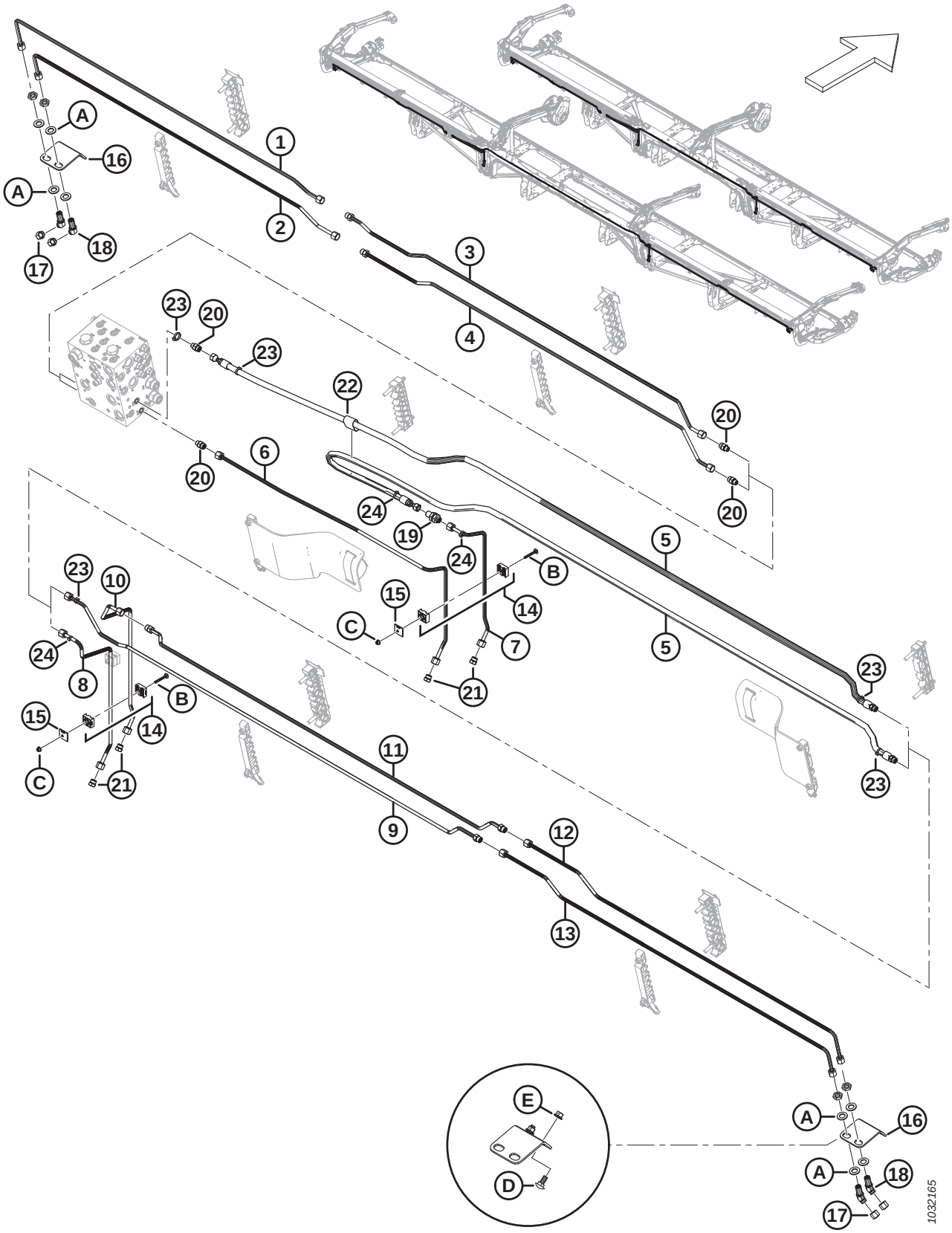

Ref	Part Number	Description	Qty	Serial Number
11	313529	LINE – HYDRAULIC (FD240 AND FD245) [385]	1	
	283838	LINE – HYDRAULIC (FD241) [386]	1	
	283015	LINE – HYDRAULIC (FD250) [387]	1	
	135865	O-RING – Ø1.78 X Ø9.25		
12	283776	LINE – HYDRAULIC (FD240, FD241, FD245, AND FD250)	1	
13	283777	LINE – HYDRAULIC (FD240, FD241, FD245, AND FD250)	1	
14	313496	CLAMP – ASSY [388]	3	
15	313497	PLATE – COVER CLAMP	3	
16	312134	PLATE – BULKHEAD MTG	2	
17	136325	CAP – HYD SAE-6 ORFS	4	
18	136146	FITTING – ELBOW 45° BLKHD HYD [389]	4	
	135865	O-RING – Ø1.78 X Ø9.25		
19	136145	FITTING – BULKHEAD UNION HYD	1	
	135865	O-RING – Ø1.78 X Ø9.25		
20	135778	FITTING – ADAPTER	4	
	50219	O-RING – Ø1.98 X Ø11.89		
	135865	O-RING – Ø1.78 X Ø9.25		
21	136326	PLUG – HYD SAE-6 ORFS	4	
22	135443	CINCH STRAP – 4 IN. LG	1	
23	40703	FASTENER – CABLE TIE, BLUE	4	
24	40701	FASTENER – CABLE TIE, YELLOW	4	
A	136540	WASHER – FLAT		
B	184644	BOLT – RHSN M6 X 1 X 50-8.8-ZINC		
C	152668	NUT – HEX FLG CTR LOC M6 X 1-8		
D	135785	BOLT – RHSN M10 X 1.5 X 25-8.8-AA1J		
E	135799	NUT – HEX FLG CTR LOC M10 X 1.5-10		

385. Used for FD240 and FD245 headers.
386. Used for FD241 headers.
387. Used for FD250 headers.
388. The clamp assembly includes two clamp halves (NSS). It does NOT include the cover plate or hardware.
389. The fitting includes a securing nut (NSS).

92 Hydraulics – VertiBlade™ Vertical Knife (FD225, FD230, FD235, FD241, and FD245)

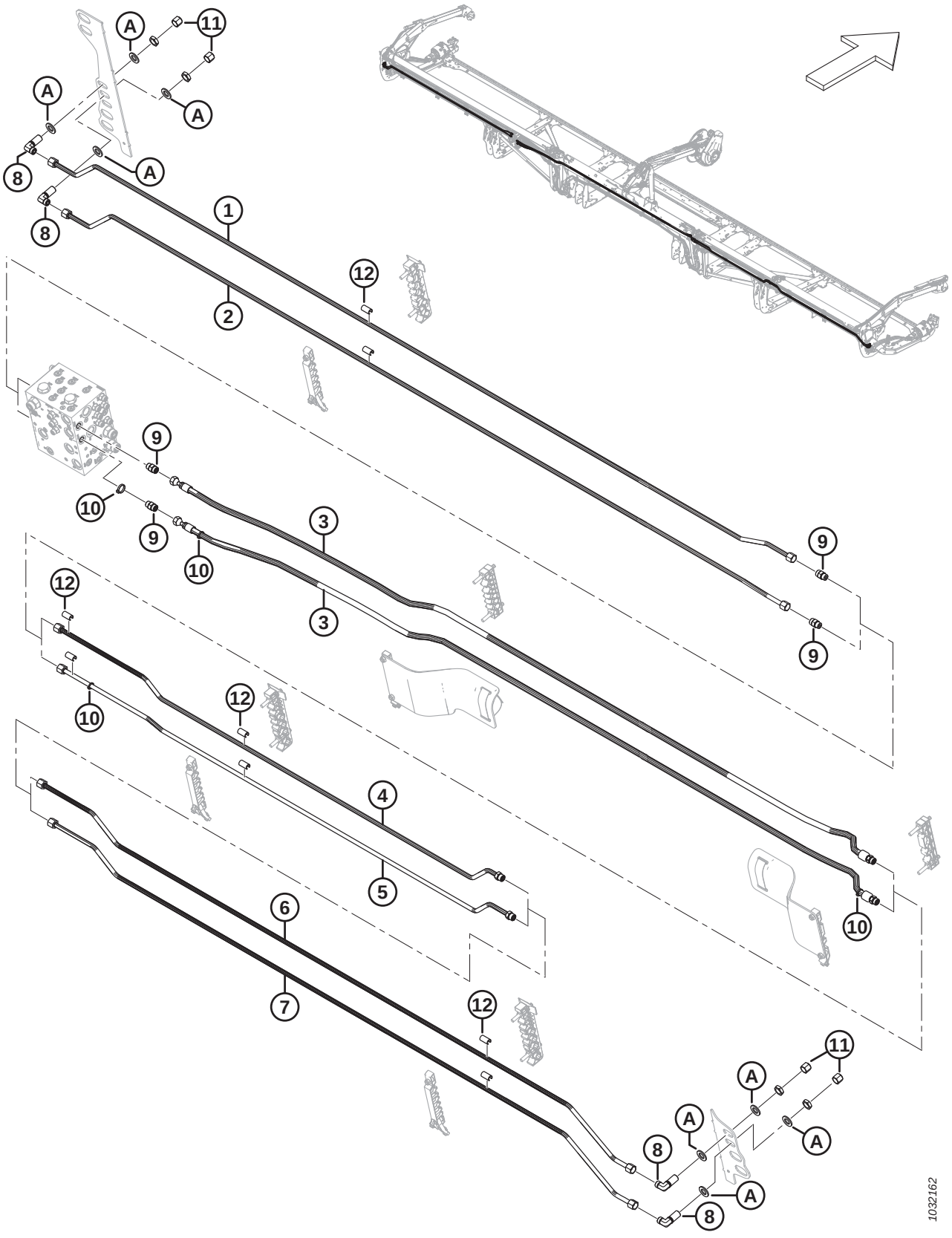

Ref	Part Number	Description	Qty	Serial Number
	B7339	KIT – 25 FT. VERTIBLADE PLUMBING PKG. [390]		
	B7127	KIT – 30 FT. VERTIBLADE PLUMBING PKG. [390]		
	B7128	KIT – 35 FT. VERTIBLADE PLUMBING PKG. [390]		
	B7130	KIT – 41 FT. VERTIBLADE PLUMBING PKG. [390]		
	B7195	KIT – 45 FT. VERTIBLADE PLUMBING PKG. [390]		
1	323827	LINE – HYDRAULIC (FD225) [391]	1	
	283050	LINE – HYDRAULIC (FD230) [392]	1	
	283160	LINE – HYDRAULIC (FD235) [393]	1	
	283460	LINE – HYDRAULIC (FD241) [394]	1	
	283435	LINE – HYDRAULIC (FD245) [395]	1	
2	323826	LINE – HYDRAULIC (FD225) [396]	1	
	283049	LINE – HYDRAULIC (FD230) [397]	1	
	283159	LINE – HYDRAULIC (FD235) [398]	1	
	283459	LINE – HYDRAULIC (FD241) [399]	1	
	283434	LINE – HYDRAULIC (FD245) [400]	1	
3	283097	HOSE – HYD (FD225, FD230, FD235, AND FD241) [401]	2	
	283560	HOSE – HYD (FD245) [402]	2	
	135866	O-RING – Ø1.78 X Ø12.42		
4	323829	LINE – HYDRAULIC (FD225) [396]	1	
	283081	LINE – HYDRAULIC (FD230) [397]	1	
	283161	LINE – HYDRAULIC (FD235) [398]	1	
	283194	LINE – HYDRAULIC (FD241) [399]	1	
	283436	LINE – HYDRAULIC (FD245) [400]	1	
	135866	O-RING – Ø1.78 X Ø12.42		

390. The kit includes all listed parts to make the header VertiBlade™ Vertical Knife ready if not factory configured. Kits are available through Whole Goods only.
391. Used for FD225 headers.
392. Used for FD230 headers.
393. Used for FD235 headers.
394. Used for F241 headers.
395. Used for FD245 headers.
396. Used for FD225 headers.
397. Used for FD230 headers.
398. Used for FD235 headers.
399. Used for F241 headers.
400. Used for FD245 headers.
401. Used for FD225, FD230, FD235, and FD241 headers.
402. Used for FD245 headers.

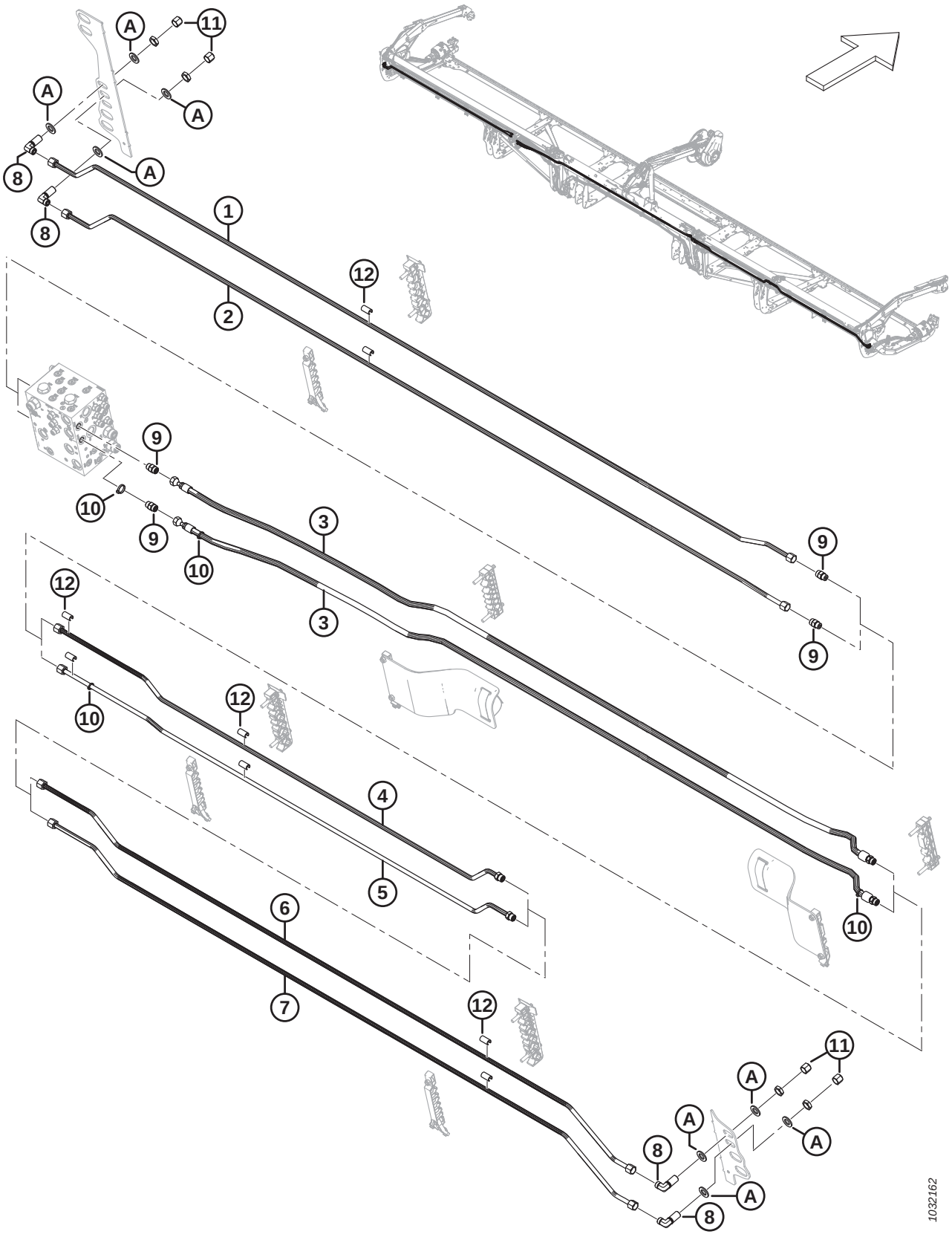
A
11
A
A
8
A
8
1
2
12
9
10
9
10
3
3
9
9
12
10
12
4
5
6
7
12
11
A
A
A
8
A
8
1032162

Ref	Part Number	Description	Qty	Serial Number
5	323828	LINE – HYDRAULIC (FD225) [403]	1	
	283082	LINE – HYDRAULIC (FD230) [404]	1	
	283162	LINE – HYDRAULIC (FD235) [405]	1	
	283195	LINE – HYDRAULIC (FD241) [406]	1	
	283437	LINE – HYDRAULIC (FD245) [407]	1	
	135866	O-RING – Ø1.78 X Ø12.42		
6	283438	LINE – HYDRAULIC (FD241 AND FD245) [408]	1	
7	283439	LINE – HYDRAULIC (FD241 AND FD245) [408]	1	
8	136244	FITTING – ELBOW 90° BULKHEAD HYD [409]	4	
	135866	O-RING – Ø1.78 X Ø12.42		
9	135780	FITTING – ADAPTER	4	
	44209	O-RING – Ø2.21 X Ø16.36		
	135866	O-RING – Ø1.78 X Ø12.42		
10	252795	FASTENER – CABLE TIE, PINK	4	
11	136741	CAP – HYD SAE 8 ORFS	4	
12	323003	SPACER – 1/2 IN. HYD LINE [410]		
A	18601	WASHER – FLAT SAE		

403. Used for FD225 headers.
404. Used for FD230 headers.
405. Used for FD235 headers.
406. Used for F241 headers.
407. Used for FD245 headers.
408. FD241 and FD245 headers only.
409. The fitting includes a securing nut.
410. Quantities: FD225 = 6, FD230 = 10, FD235 = 14, FD241 = 18, and FD245 = 18.

93 Hydraulics – VertiBlade™ Vertical Knife (FD250)

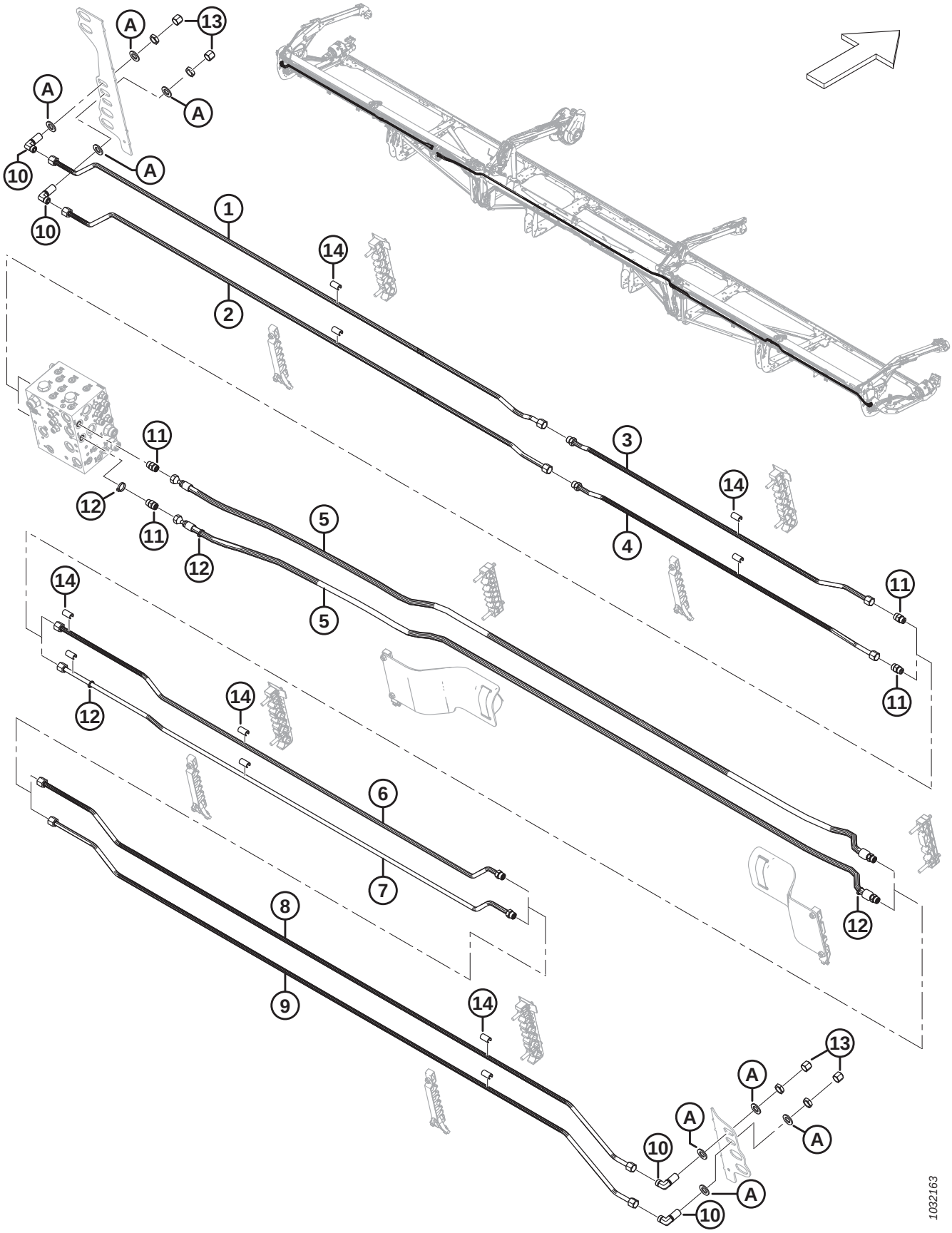

Ref	Part Number	Description	Qty	Serial Number
	B7131	KIT – 50 FT. VERTIBLADE PLUMBING PKG. [411]		
1	283467	LINE – HYDRAULIC	1	
2	283466	LINE – HYDRAULIC	1	
3	283191	LINE – HYDRAULIC	1	
	135866	O-RING – Ø1.78 X Ø12.42		
4	283190	LINE – HYDRAULIC	1	
	135866	O-RING – Ø1.78 X Ø12.42		
5	283560	HOSE – HYD	2	
	135866	O-RING – Ø1.78 X Ø12.42		
6	283192	LINE – HYDRAULIC	1	
	135866	O-RING – Ø1.78 X Ø12.42		
7	283193	LINE – HYDRAULIC	1	
	135866	O-RING – Ø1.78 X Ø12.42		
8	283438	LINE – HYDRAULIC	1	
9	283439	LINE – HYDRAULIC	1	
10	136244	FITTING – ELBOW 90° BULKHEAD HYD [412]	4	
	135866	O-RING – Ø1.78 X Ø12.42		
11	135780	FITTING – ADAPTER	4	
	44209	O-RING – Ø2.21 X Ø16.36		
	135866	O-RING – Ø1.78 X Ø12.42		
12	252795	FASTENER – CABLE TIE, PINK	4	
13	136741	CAP – HYD SAE 8 ORFS	4	
14	323003	SPACER – 1/2 IN. HYD LINE	22	
A	18601	WASHER – FLAT SAE		

411. The kit includes all listed parts to make the header VertiBlade™ Vertical Knife ready if not factory configured. Kits are available through Whole Goods only.
412. The fitting includes a securing nut.

94 Hydraulic Line Covers (FD225)

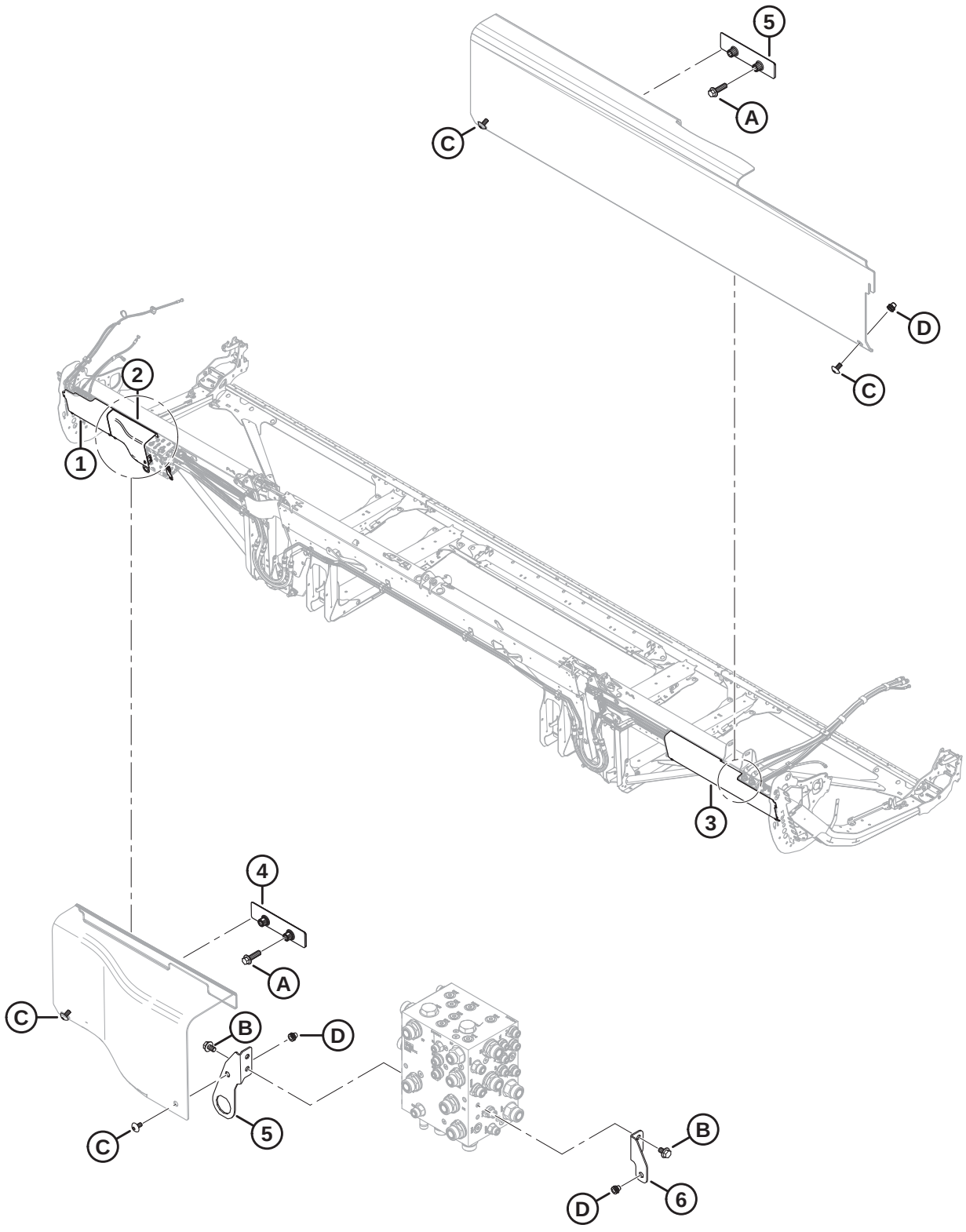

HYDRAULIC LINE COVERS (FD225)

Ref	Part Number	Description	Qty	Serial Number
1	323164	COVER – HYD LH END PLASTIC	1	
2	323795	COVER – HYD MANIFOLD LH	1	
3	340683	COVER – HYD RH END PLASTIC	1	
4	283849	BRACKET – HYD COVER SUPPORT	2	
5	323772	ASSY – CONNECTOR BRACKET [413]	1	
6	323773	ASSY – RH SHIELD BRACKET [414]	1	
A	136211	BOLT – HEX FLG HD M10 X 1.5 X 35-8.8-AA1J		
B	136151	BOLT – HEX FLG HD TFL M10 X 1.5 X 16-8.8-AA1J		
C	320336	SCREW – TORX TRUSS HD M8 X 1.25 X 16-SPCL-8.8-AA1T		
D	320448	RIVNUT – M8 X 1.25 HEX		

413. The assembly includes cover mounting connector bracket (NSS) and rivnut (MD #320448).
414. The assembly includes RH shield mounting bracket (NSS) and rivnut (MD #320448).

95 Hydraulic Line Covers (FD230, FD235, and FD240)

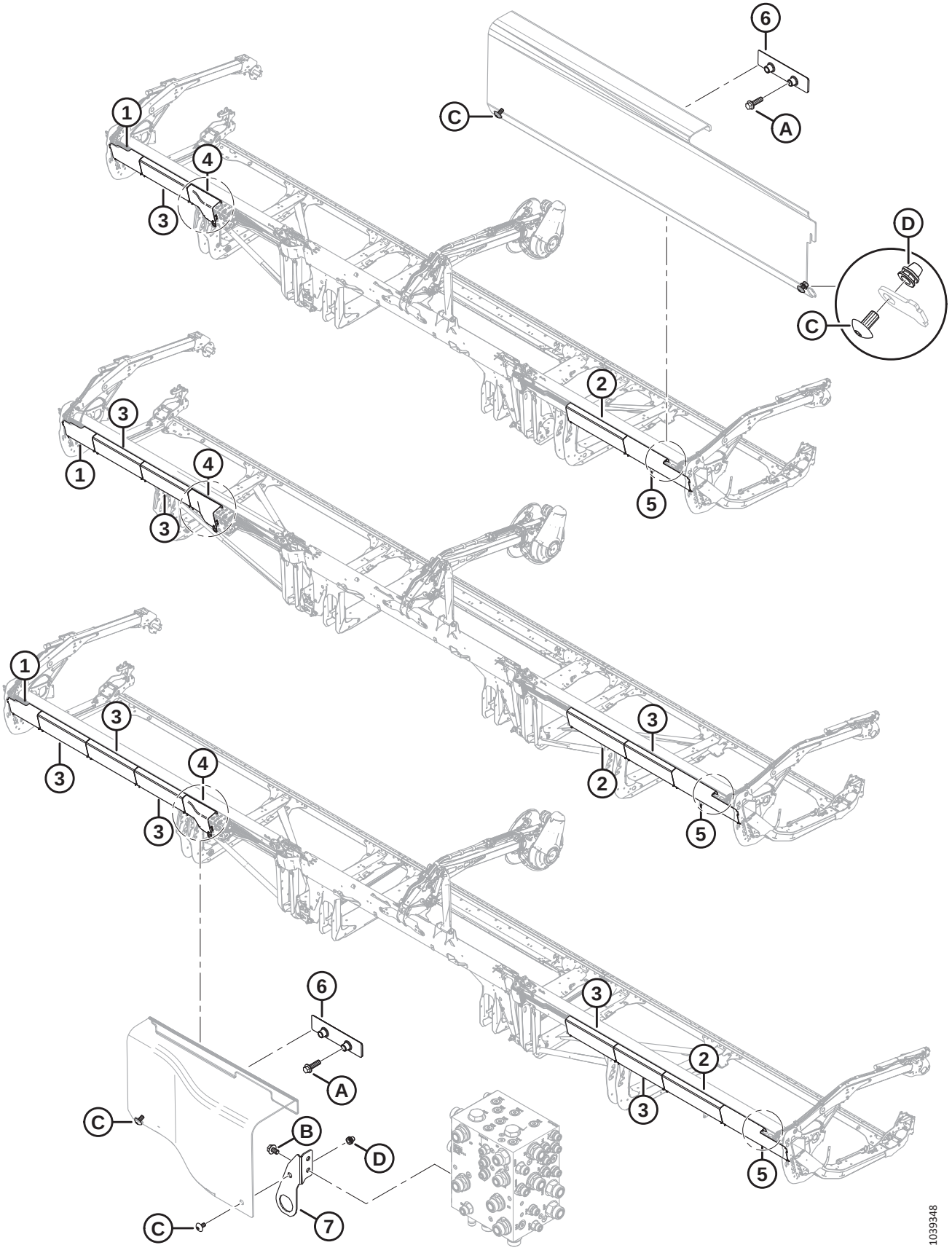

HYDRAULIC LINE COVERS (FD230, FD235, AND FD240)

Ref	Part Number	Description	Qty	Serial Number
1	323164	COVER – HYD LH END PLASTIC	1	
2	323172	COVER – HYD LONG PLASTIC [415]		
3	323169	COVER – HYD COMMON PLASTIC [416]		
4	323795	COVER – HYD MANIFOLD LH	1	
5	323166	COVER – HYD RH END PLASTIC	1	
6	283849	BRACKET – HYD COVER SUPPORT	2	
7	323772	ASSY – CONNECTOR BRACKET [417]	1	
A	136211	BOLT – HEX FLG HD M10 X 1.5 X 35-8.8-AA1J		
B	136151	BOLT – HEX FLG HD TFL M10 X 1.5 X 16-8.8-AA1J		
C	320336	SCREW – TORX TRUSS HD M8 X 1.25 X 16-SPCL-8.8-AA1T [418]		
D	320448	RIVNUT – M8 X 1.25 HEX		

415. Quantities: FD230 = 1, FD235 = 1, and FD240 = 1.
416. Quantities: FD230 = 1, FD235 = 3, and FD240 = 5.
417. The assembly includes cover mounting connector bracket (NSS) and rivnut (MD #320448). Model year 2022 and prior machines with superseded bracket (MD #311513) used M10 bolt (MD #152655) and M10 lock nut (MD #135799) to secure the LH hydraulic manifold cover to the connector bracket. For model year 2023 and later machines, or for machines that have been serviced with connector bracket assembly (MD #323772), order M8 screw (MD #320336).
418. Quantities: FD230 = 10, FD235 = 14, and FD240 = 18.

96 Hydraulic Line Covers (FD241, FD245, and FD250)

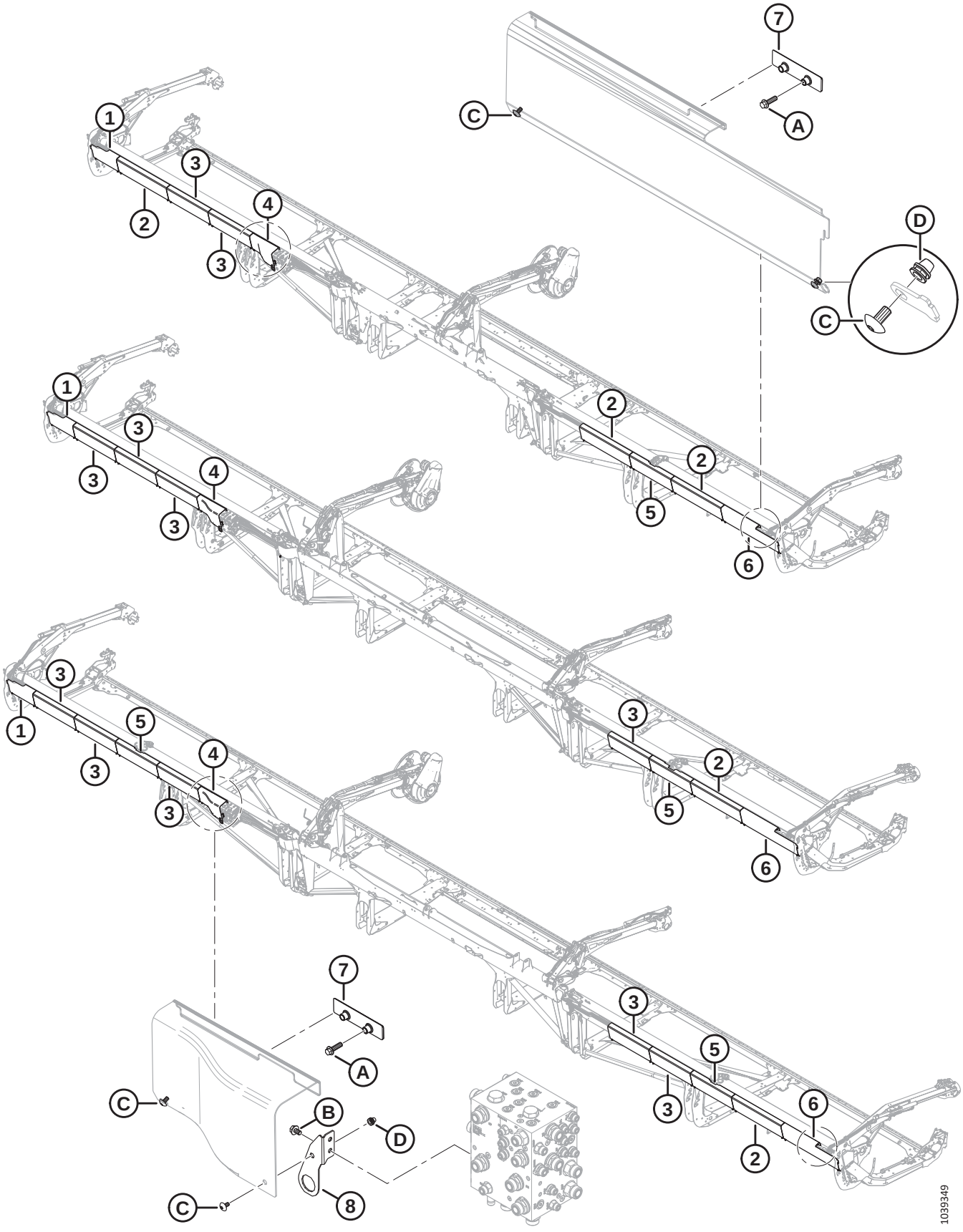

HYDRAULIC LINE COVERS (FD241, FD245, AND FD250)

Ref	Part Number	Description	Qty	Serial Number
1	323164	COVER – HYD LH END PLASTIC	1	
2	323172	COVER – HYD LONG PLASTIC [419]		
3	323169	COVER – HYD COMMON PLASTIC [420]		
4	323795	COVER – HYD MANIFOLD LH	1	
5	323165	COVER – HYD SPLIT PLASTIC [421]		
6	323166	COVER – HYD RH END PLASTIC	1	
7	283849	BRACKET – HYD COVER SUPPORT	2	
8	323772	ASSY – CONNECTOR BRACKET [422]	1	
A	136211	BOLT – HEX FLG HD M10 X 1.5 X 35-8.8-AA1J		
B	136151	BOLT – HEX FLG HD TFL M10 X 1.5 X 16-8.8-AA1J		
C	320336	SCREW – TORX TRUSS HD M8 X 1.25 X 16-SPCL-8.8-AA1T [423]		
D	320448	RIVNUT – M8 X 1.25 HEX		

419. Quantities: FD241 = 3, FD245 = 1, and FD250 = 3.
420. Quantities: FD241 = 2, FD245 = 4, and FD250 = 5.
421. Quantities: FD241 = 1, FD245 = 1, and FD250 = 2.
422. The assembly includes cover mounting connector bracket (NSS) and rivnut (MD #320448). Model year 2022 and prior machines with superseded bracket (MD #311513) used M10 bolt (MD #152655) and M10 lock nut (MD #135799) to secure the LH hydraulic manifold cover to the connector bracket. For model year 2023 and later machines, or for machines that have been serviced with connector bracket assembly (MD #323772), order M8 screw (MD #320336).
423. Quantities: FD241 = 18, FD245 = 18, and FD250 = 22.

97 Electrical – Harness (FD225)

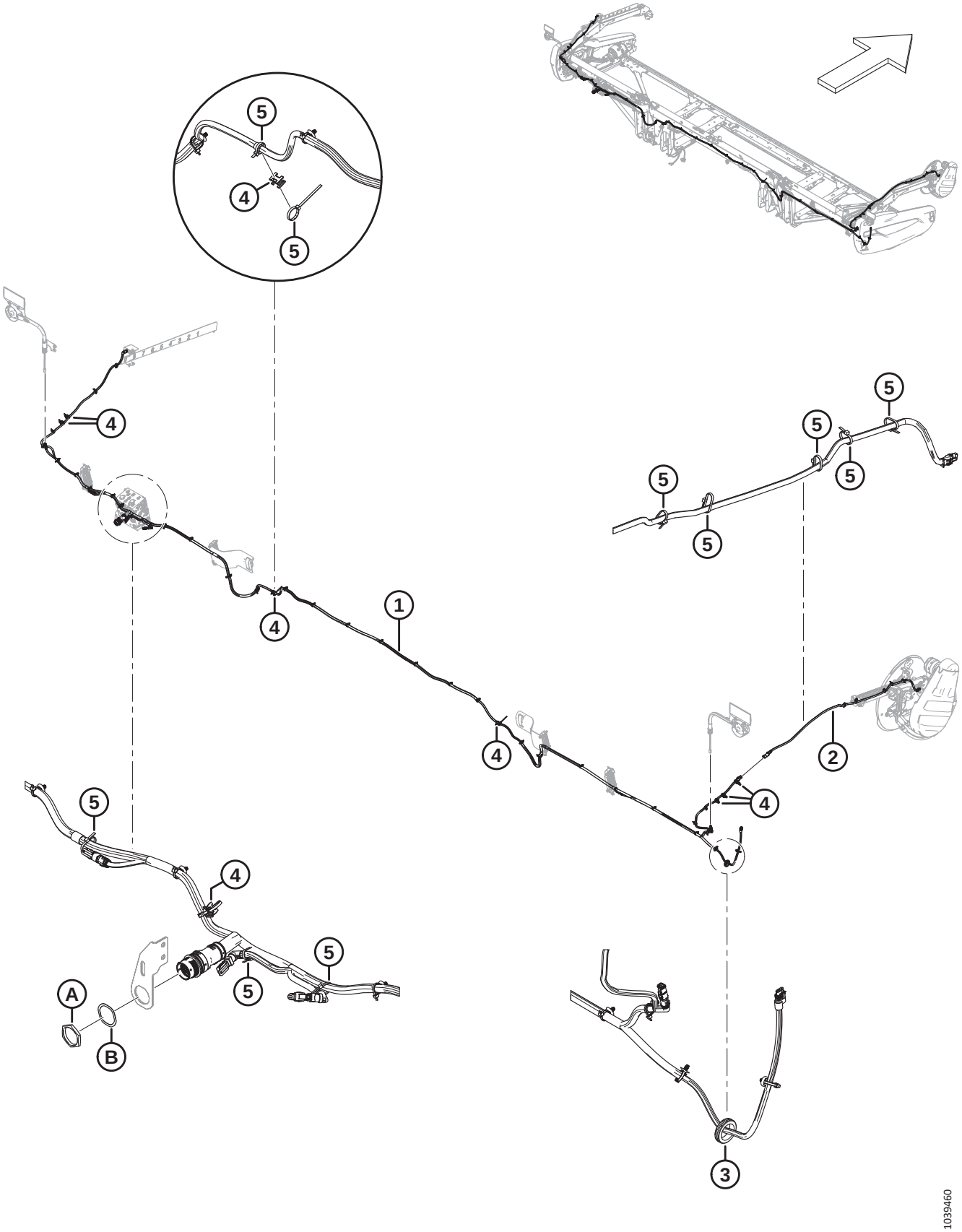

Ref	Part Number	Description	Qty	Serial Number
1	323381	HARNESS – MAIN 25 FT [424]	1	
2	323145	HARNESS – HDR EXT. REEL ARM	1	
3	323130	GROMMET – RUBBER	1	
4	134442	SPACER – DUAL SWIVEL SADDLE	8	
5	21763	FASTENER – CABLE TIE, BLACK, 160 MM LG	A/R	
A	134728	NUT – PANEL, HDP 20, SIZE 24		
B	134730	WASHER – LOCK, HDP 20, SIZE 24		

424. The harness comes complete with all fir tree fasteners (MD #136655) attached.

98 Electrical – Harness (FD230, FD235, FD240, FD241, FD245, and FD250)

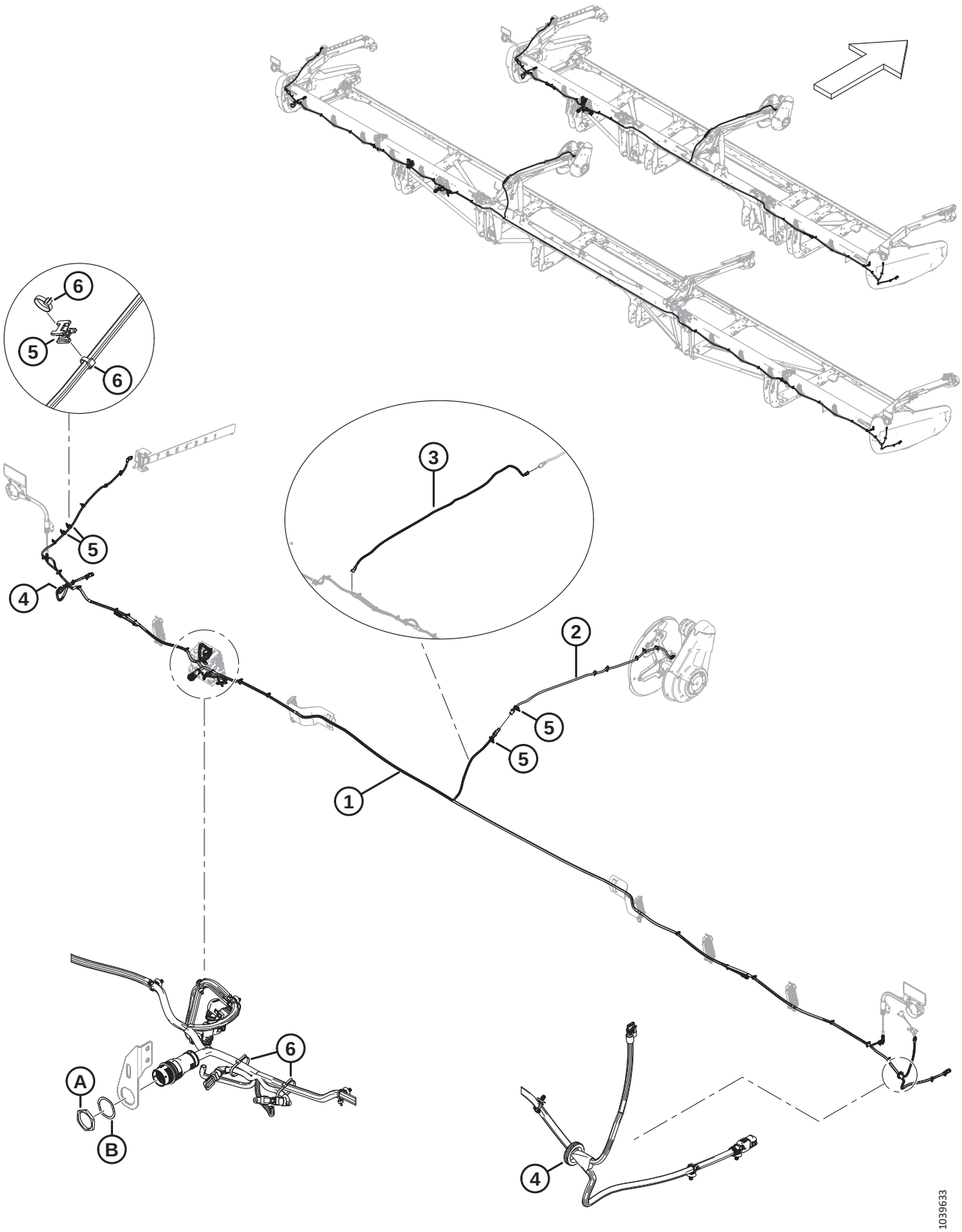

Ref	Part Number	Description	Qty	Serial Number
1	323207	HARNESS – MAIN 30 FT [425]	1	
	323208	HARNESS – MAIN 35 FT [425]	1	
	323210	HARNESS – MAIN 40 FT [425]	1	
	323209	HARNESS – MAIN 41 FT [425]	1	
	323211	HARNESS – MAIN 45 FT [425]	1	
	323212	HARNESS – MAIN 50 FT [425]	1	
	136655	FASTENER – FIR TREE MT W/ TIE	A/R	
2	323145	HARNESS – HDR EXT. REEL ARM	1	
3	323718	HARNESS – HDR EXT. REEL TR (2021/2022 FD240 TRIPLE REEL) [426]	1	
4	323130	GROMMET – RUBBER	2	
5	134442	SPACER – DUAL SWIVEL SADDLE	4	
6	21763	FASTENER – CABLE TIE, BLACK, 160 MM LG	A/R	
A	134728	NUT – PANEL, HDP 20, SIZE 24		
B	134730	WASHER – LOCK, HDP 20, SIZE 24		

425. The harness comes complete with all fir tree fasteners (MD #136655) attached.
426. Required only on model year 2021/2022 FD240 triple-reel headers; installed between the main harness and extension harness (MD #323145).

99 Electrical – Clearance Lights

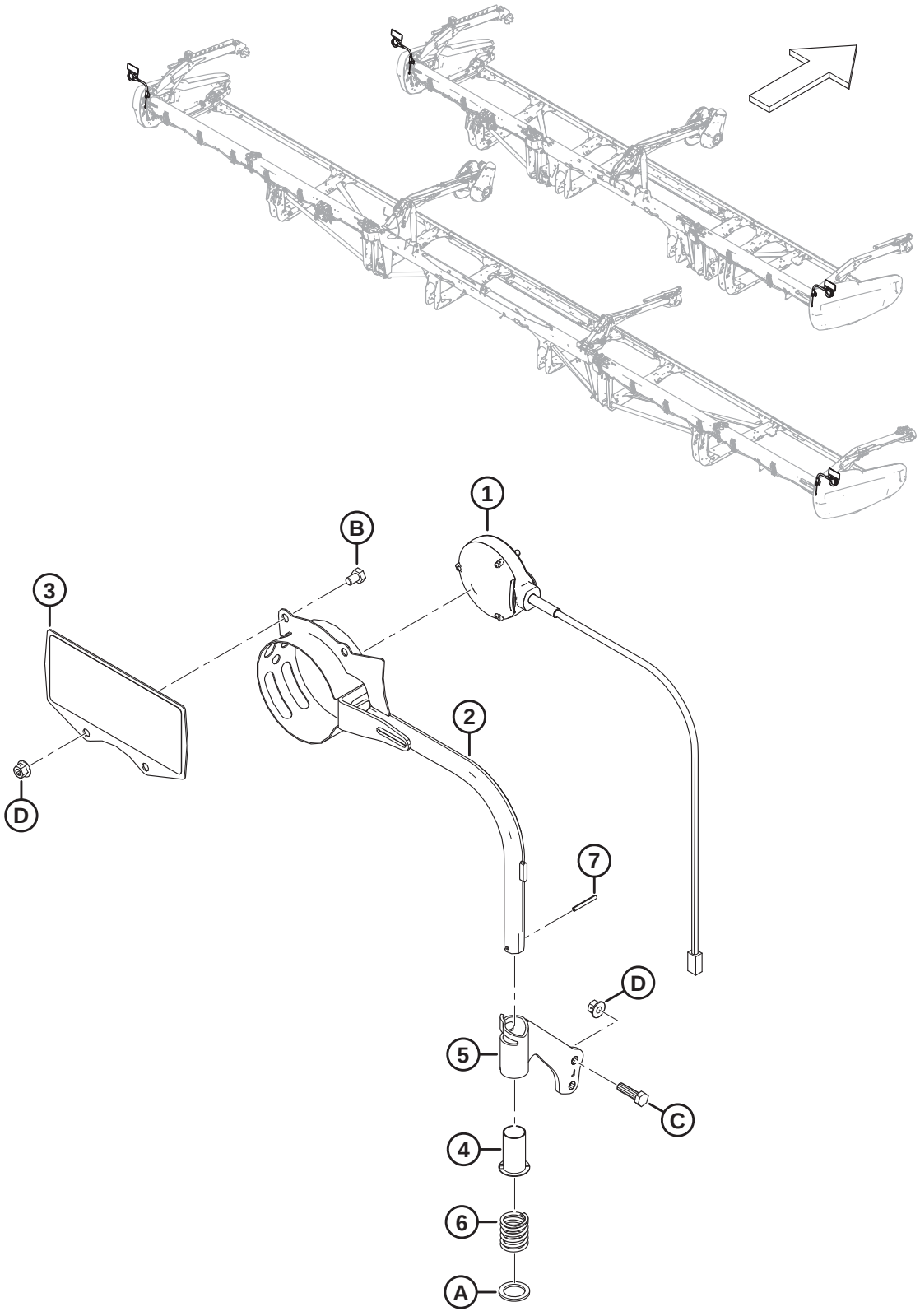

Ref	Part Number	Description	Qty	Serial Number
1	313940	LIGHT – MARKER, AMBER	2	
2	313192	WELDT – CLEARANCE LIGHT	2	
3	313643	ASSY – COMBINE REFLECTOR [427]	2	
4	233912	BUSHING	2	
5	233914	ASSY – LH TUBE MOUNT [428]	1	
	233913	ASSY – RH TUBE MOUNT [428]	1	
6	313064	SPRING – COMPRESSION	2	
7	7642	PIN – SPRING 3/16 DIA X 1.5 LG	2	
A	320248	WASHER – FLAT		
B	50071	BOLT – HEX HD TFL M10 X 1.5 X 15-8.8-AA1J		
C	30628	BOLT – HEX HD M10 X 1.5 X 35-8.8-AA1J		
D	135799	NUT – HEX FLG CTR LOC M10 X 1.5-10		

427. The reflector assembly includes two reflectors (MD #313730, MD #115146).
428. The tube mount assembly includes bushing (MD #233912).

100 Electrical – Reel Height Sensor

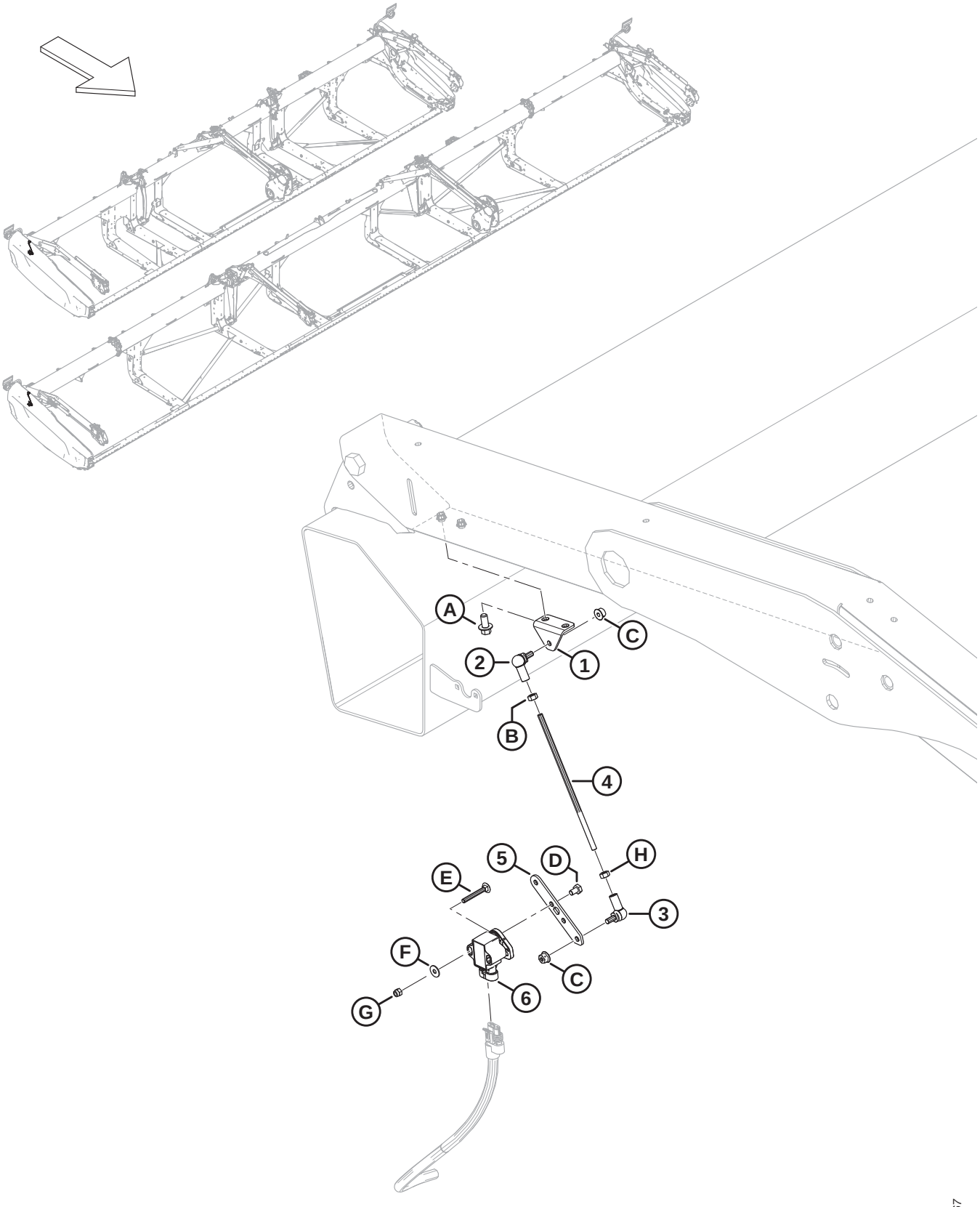

ELECTRICAL – REEL HEIGHT SENSOR

Ref	Part Number	Description	Qty	Serial Number
1	251881	BRACKET	1	
2	291484	BALL JOINT – RH THREAD	1	
3	291485	BALL JOINT – LH THREAD	1	
4	232676	ROD – THREADED	1	
5	251879	ARM – FLOAT SENSOR	1	
6	248643	ROTARY SENSOR – DUAL OUTPUT	1	
A	136485	BOLT – HEX FLG HD TFL M8 X 1.25 X 16-8.8-AA1J		
B	184683	NUT – HEX ISO 4032 M6 X 1-8-ZINC		
C	152668	NUT – HEX FLG CTR LOC M6 X 1-8		
D	136561	BOLT – HEX HD TFL M6 X 1 X 10-8.8-AA1J		
E	136604	BOLT – RHSN TFL M5 X 0.8 X 40-8.8-AA1J		
F	184701	WASHER – FLAT LARGE M5-200HV		
G	197230	NUT – HEX NYLOC M5 X 0.8-8-AA1J		
H	136613	NUT – HEX LH ISO 4032 M6 X 1-8 ZINC		

101 Electrical – Reel Fore-Aft Sensor (2023 and Prior)

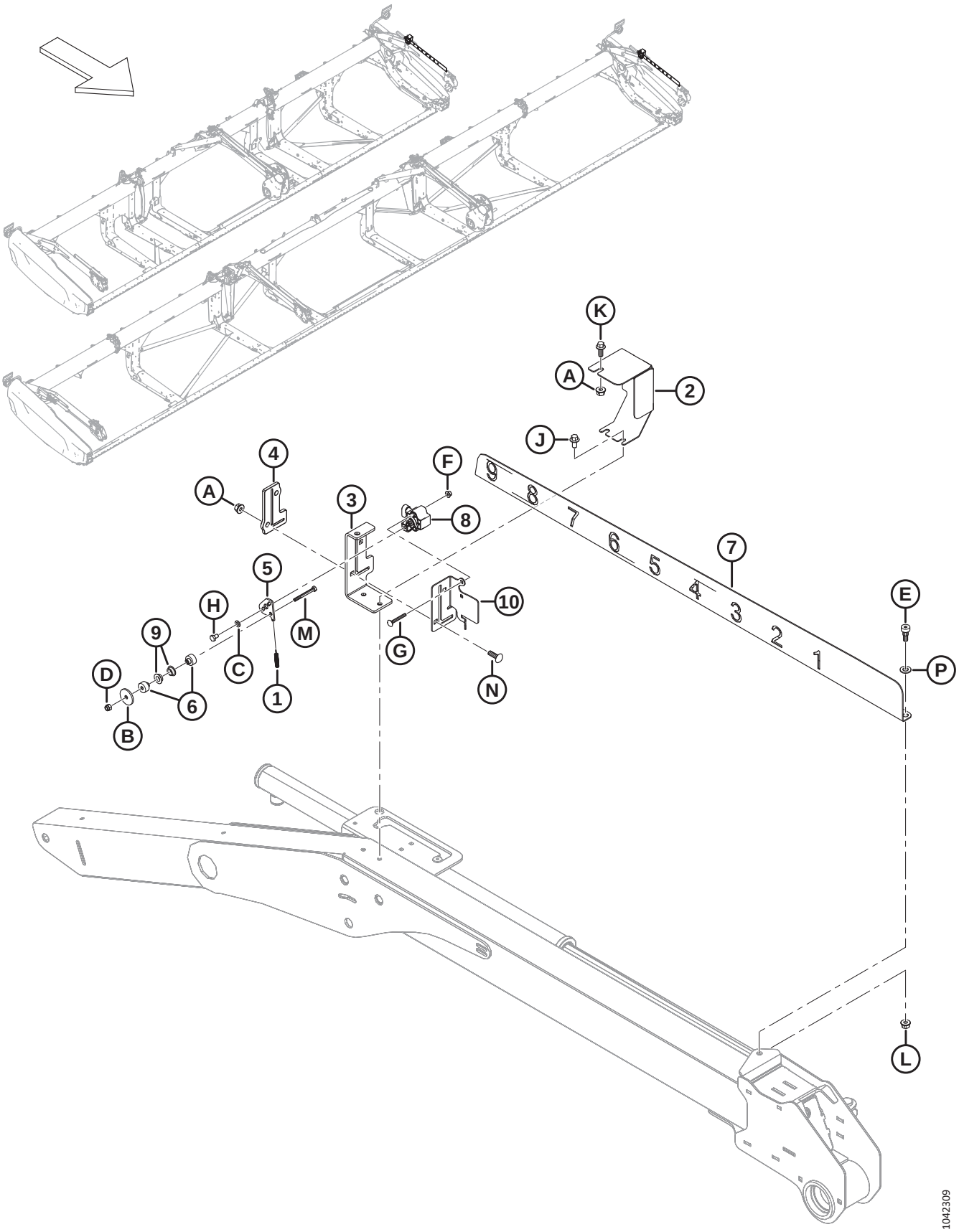

NOTE:

Unless otherwise stated, the parts and hardware listed in this section are used to service units made in model year 2023 and prior.

Ref	Part Number	Description	Qty	Serial Number
1	328556	SPRING – EXTENSION [429]	1	–486189
2	328547	COVER – F/A SENSOR [430]	1	–486189
3	340218	SUPPORT – REEL F/A INDICATOR [430]	1	–486189
4	311318	GUIDE – REEL F/A [430]	1	–486189
5	328539	ARM – F/A SENSOR [429]	1	–486189
6	328534	SPACER – SENSOR BUSHING [429]	2	–486189
7	323937	INDICATOR – REEL F/A [430]	1	–486189
8	248643	ROTARY SENSOR – DUAL OUTPUT	1	–486189
9	206340	BUSHING – SHOULDER, M10	2	–486189
10	340183	PLATE – SENSOR SUPPORT [430]	1	–486189
A	135337	NUT – HEX FLG CTR LK M8 X 1.25-8-AA1J		
B	43219	WASHER – FLAT		
C	184705	WASHER – FLAT M6-200HV-AA1J		
D	184685	NUT – HEX NYLOC M6 X 1-8-AA1J		
E	135894	SCREW – HEX SOC HD SHLDR M10		
F	136635	NUT – HEX FLG CTR LOC M5 X 0.8-8-AA1J		
G	197229	BOLT – RHSN TFL M5 X 0.8 X 35-4.6-AA1J		
H	136561	BOLT – HEX HD TFL M6 X 1 X 10-8.8-AA1J		
J	136485	BOLT – HEX FLG HD TFL M8 X 1.25 X 16-8.8-AA1J		
K	136300	BOLT – HEX FLG HD TFL M8 X 1.25 X 20-8.8-AA3L		
L	135337	NUT – HEX FLG CTR LK M8 X 1.25-8-AA1J		
M	136595	BOLT – HEX HD M6 X 1 X 55-8.8		
N	136824	BOLT – RHSSN M8 X 1.25 X 25-8.8-AA1J		
P	184711	WASHER – FLAT REG M10-200HV-AA1J		

429. Service part only for model year 2023 and prior units.

430. Superseded by Reel Fore-Aft Sensor kit (MD #368338) for model year 2024. For service parts, refer to Section *102 Electrical – Reel Fore-Aft Sensor (2024 and Later), page 265*.

102 Electrical – Reel Fore-Aft Sensor (2024 and Later)

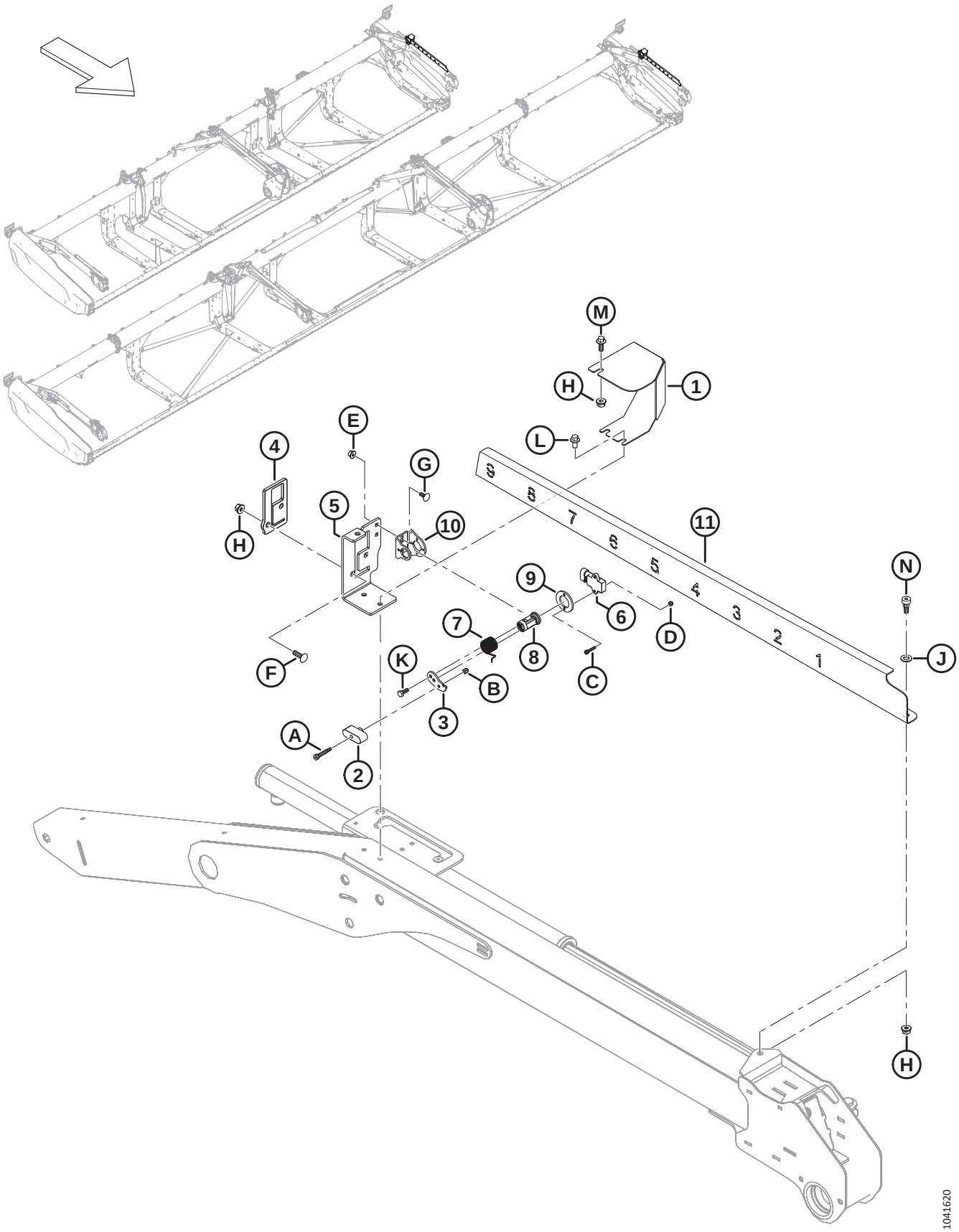

Ref	Part Number	Description	Qty	Serial Number
	368338	KIT – FORE AFT SENSOR [431]	A/R	
1	368239	COVER – FORE AFT SENSOR	1	486190–
2	360840	SLIDER – FORE/AFT	1	486190–
3	340956	ARM – SENSOR	1	486190–
4	360828	GUIDE – REEL F/A	1	486190–
5	360824	SUPPORT – REEL F/A INDICATOR	1	486190–
6	500303	SENSOR – ROTARY DUAL CONTACTLESS	1	486190–
7	360212	SPRING – TORSION	1	486190–
8	352163	ASSY – SENSOR PIVOT	1	486190–
9	352001	SPACER – SENSOR	1	486190–
10	340955	SUPPORT – SENSOR	1	486190–
11	360823	INDICATOR – REEL F/A	1	486190–
A	320409	SCREW – HEX SOC HD SHLDR 6 X 25-M5 X 0.8 X 9.5-12.9-ZINC		
B	197230	NUT – HEX NYLOC M5 X 0.8-8-AA1J		
C	320410	SCREW – HEX SOC HD M4 X 0.7 X 20-A2SS		
D	320390	NUT – HEX NYLOC M4 X 0.7-8-A2-SS		
E	152668	NUT – HEX FLG CTR LOC M6 X 1-8		
F	136824	BOLT – RHSSN M8 X 1.25 X 25-8.8-AA1J		
G	136748	BOLT – RHSN M6 X 1 X 16-8.8-ZINC		
H	135337	NUT – HEX FLG CTR LK M8 X 1.25-8-AA1J		
J	184711	WASHER – FLAT REG M10-200HV-AA1J		
K	184642	BOLT – HEX HD TFL M6 X 1 X 16-8.8-AA1J		
L	136485	BOLT – HEX FLG HD TFL M8 X 1.25 X 16-8.8-AA1J		
M	136300	BOLT – HEX FLG HD TFL M8 X 1.25 X 20-8.8-AA3L		
N	135894	SCREW – HEX SOC HD SHLDR M10		

431. The Fore-Aft Sensor kit (MD #368338) is used to upgrade model year 2023 and prior units to the model year 2024 reel fore-aft sensor design. The kit includes all parts and hardware listed in this section, and instructions.

103 Decals and Reflectors – FD2 Series

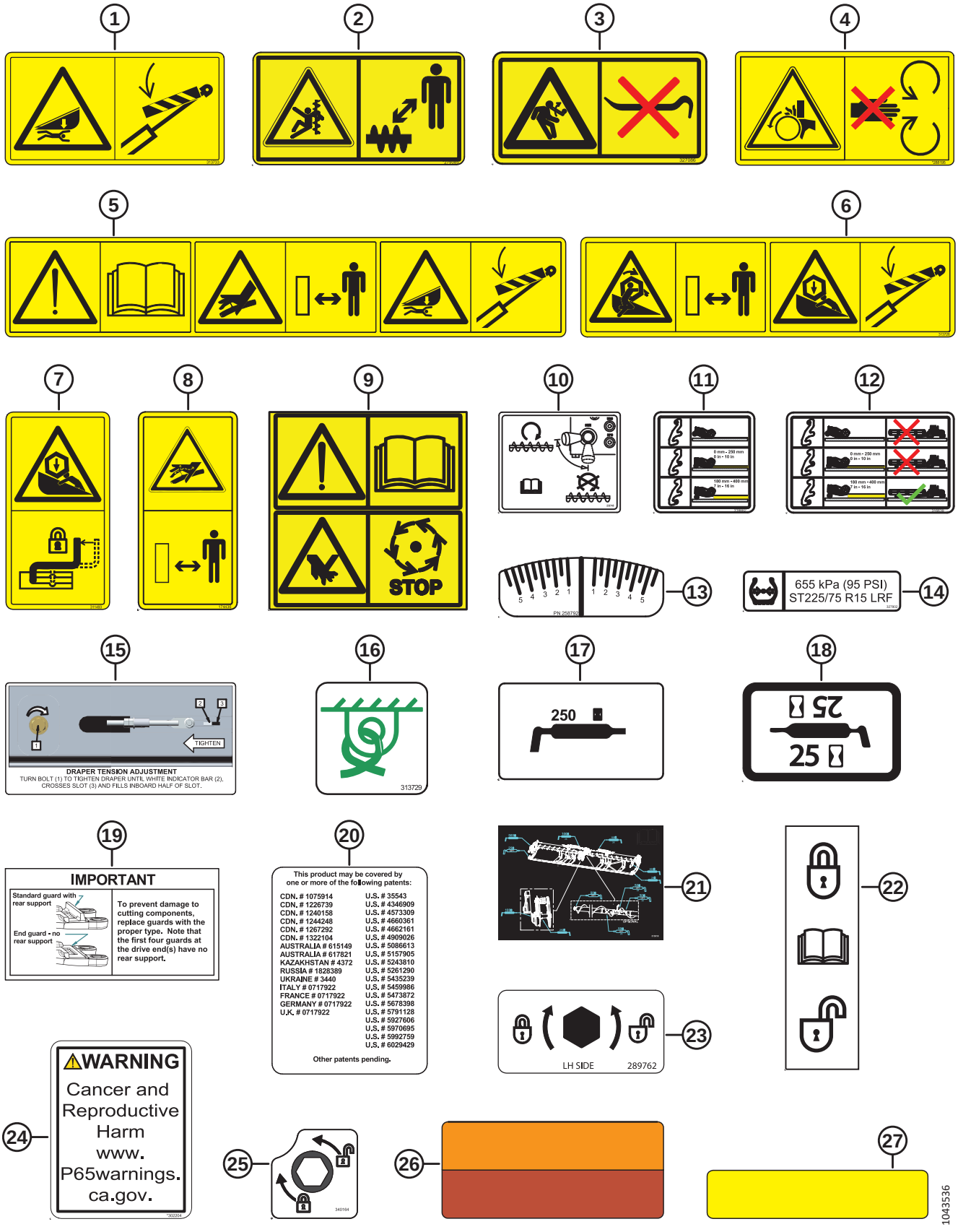

Ref	Part Number	Description	Qty	Serial Number
1	313733	DECAL – HEADER HAZARD		
2	279085	DECAL – WARNING, AUGER		
3	327086	DECAL – ENERGY RELEASE		
4	288195	DECAL – ROTATING PART		
5	313725	DECAL – MANUAL/HPF/HAZARD		
6	360541	DECAL – REEL ENTANGLEMENT/HAZARD		
7	311493	DECAL – CENTER REEL PROP LOCK		
8	174436	DECAL – HIGH PRESSURE FLUID		
9	313881	DECAL – VERTICAL KNIFE HAZARD		
10	233745	DECAL – UCA VALVE		
11	316662	DECAL – HEIGHT SETTING [432]		
12	316639	DECAL – HEIGHT SETTING, RH		
	316649	DECAL – HEIGHT SETTING, LH		
13	258792	DECAL – FLEX CHECKER		
14	327802	DECAL – TIRE PRESSURE, 655 KPA (95 PSI) [433]		
	327717	DECAL – TIRE PRESSURE, 552 KPA (80 PSI) [434]		
15	279528	DECAL – RH DRAPER TENSION		
	220084	DECAL – LH DRAPER TENSION		
16	313729	DECAL – TIE DOWN		
17	323516	DECAL – GREASE (250 HRS)		
18	23164	DECAL – 25 HR LUBE		
	23165	DECAL – 50 HR LUBE		
	115759	DECAL – GREASE 100 HR		
19	129313	DECAL – IMPORTANT: GUARDS		
20	32070	DECAL – PATENT NUMBER		
21	313510	DECAL – GREASE, FLX, DR, 2PC AUGER		
	313920	DECAL – GREASE, FLX, TR, 3PC AUGER		
22	165218	DECAL – WING LOCKOUT		
23	289762	DECAL – DIVIDER LATCH-LH		
	289763	DECAL – DIVIDER LATCH-RH		
24	302204	DECAL – CA PROPOSITION 65		
25	340164	DECAL – CAM LATCH		

432. The decal is used for the stabilizer wheels option.
433. Tire pressure decal MD #327802 (655 kPa [95 psi]) is used with tire MD #327808.
434. Tire pressure decal MD #327717 (552 kPa [80 psi]) remains available as a service part for superseded tire MD #230483.

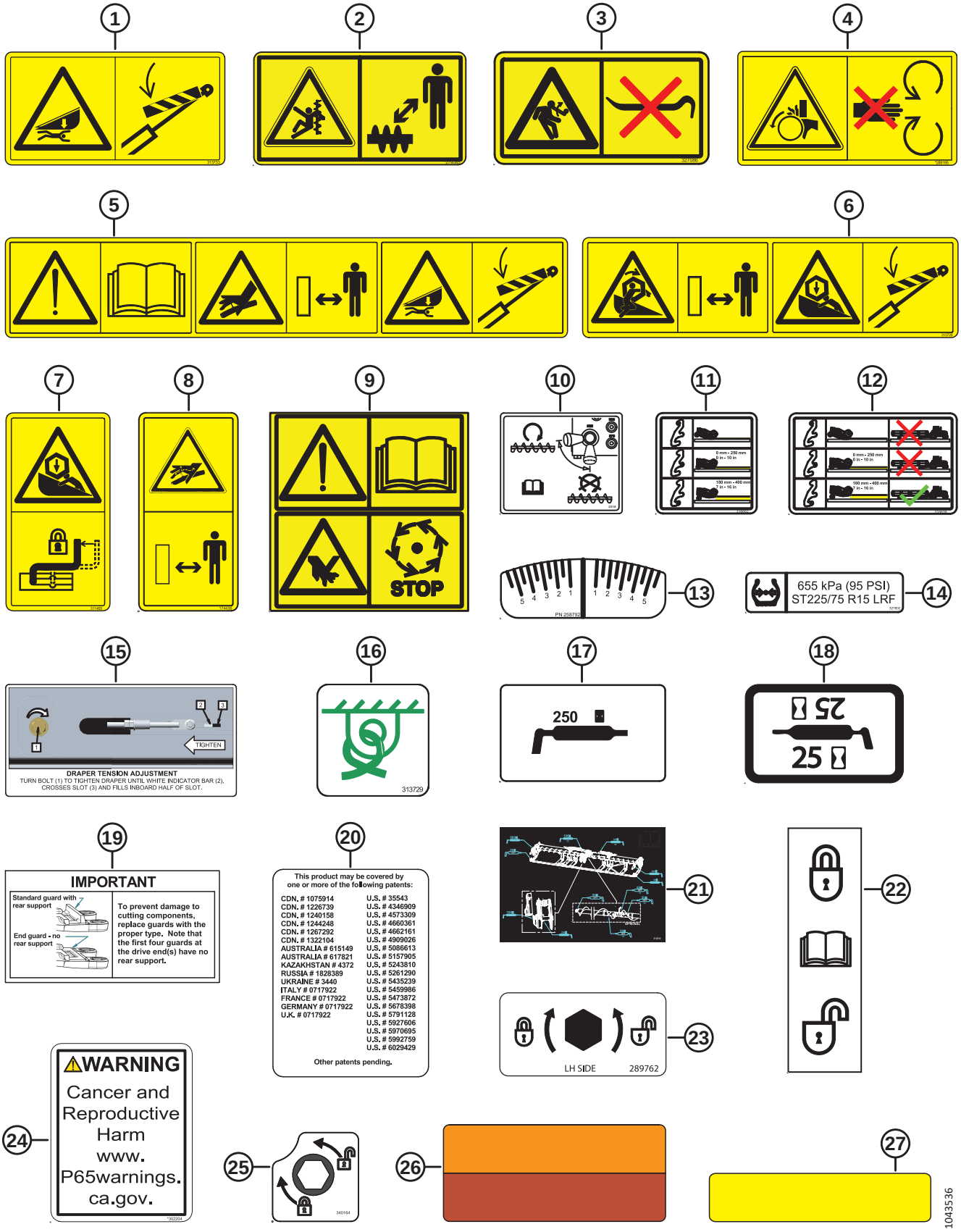
1
2
3
4
5
6
7
8
9
STOP
10
11
12
5 4 3 2 1 1 2 3 4 5
13
655 kPa (95 PSI)
ST225/75 R15 LRF
14
15
TIGHTEN
DRAPER TENSION ADJUSTMENT
TURN BOLT (1) TO TIGHTEN DRAPER UNTIL WHITE INDICATOR BAR (2), CROSSES SLOT (3) AND FILLS INBOARD HALF OF SLOT.
16
313729
17
250
18
25
25
19
IMPORTANT
Standard guard with rear support
End guard - no rear support
To prevent damage to cutting components, replace guards with the proper type. Note that the first four guards at the drive end(s) have no rear support.
20
This product may be covered by one or more of the following patents:
CDN. # 1075914
CDN. # 1226739
CDN. # 1240158
CDN. # 1244248
CDN. # 1267292
CDN. # 1322104
AUSTRALIA # 615149
AUSTRALIA # 617821
KAZAKHSTAN # 4372
RUSSIA # 1828389
UKRAINE # 3440
ITALY # 0717922
FRANCE # 0717922
GERMANY # 0717922
U.K. # 0717922
U.S. # 35543
U.S. # 4346909
U.S. # 4573309
U.S. # 4660361
U.S. # 4662161
U.S. # 4909026
U.S. # 5086613
U.S. # 5157905
U.S. # 5243810
U.S. # 5261290
U.S. # 5435239
U.S. # 5459986
U.S. # 5473872
U.S. # 5678398
U.S. # 5791128
U.S. # 5927606
U.S. # 5970695
U.S. # 5992759
U.S. # 6029429
Other patents pending.
21
22
LH SIDE 289762
23
24
⚠WARNING
Cancer and Reproductive Harm
www.P65warnings.ca.gov.
25
26
27
1043536

Ref	Part Number	Description	Qty	Serial Number
26	313787	REFLECTOR – RED/ORANGE, 230 MM [435]		
	313730	REFLECTOR – RED/ORANGE, 230 MM (CLEARANCE LIGHTS) [436]		
27	115146	REFLECTOR – AMBER, 230 MM		
	273440	REFLECTOR – AMBER, 655 MM (8 IN. CENTER TUBE) [437]		
	165524	REFLECTOR – RED, 230 MM [438]		

435. The reflector is used for plastic/PVC surfaces.
436. The reflector is used for metal surfaces.
437. The reflector is used on the reel center tubes.
438. The reflector is used on the right header endshield.

104 Decals – Product Identification, New Holland

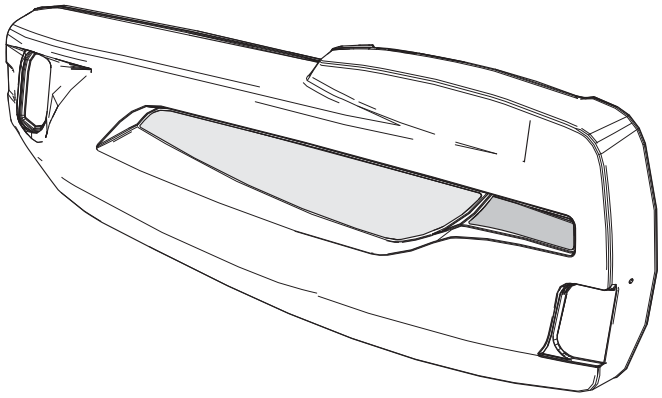

1

BY MacDon

2

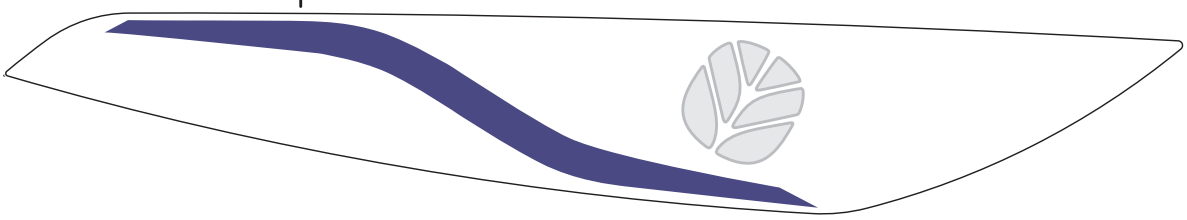

3

FD225

4

FD230

5

FD235

6

FD240

7

FD241

8

FD245

9

FD250

10

FFT FLEX-FLOAT TECHNOLOGY™

1042596

Ref	Part Number	Description	Qty	Serial Number
1	368424	DECAL – BY MACDON NH CLEAR, LH [439]	1	
	368425	DECAL – BY MACDON NH CLEAR, RH [440]	1	
2	368386	DECAL – NH, LH [441]	1	
	368394	DECAL – NH, RH [442]	1	
3	360405	DECAL – FD225 NH MODEL NBR	1	
4	360406	DECAL – FD230 NH MODEL NBR	1	
5	360407	DECAL – FD235 NH MODEL NBR	1	
6	360408	DECAL – FD240 NH MODEL NBR	1	
7	360409	DECAL – FD241 NH MODEL NBR	1	
8	360410	DECAL – FD245 NH MODEL NBR	1	
9	360411	DECAL – FD250 NH MODEL NBR	1	
10	245093	DECAL – FFT (FLEX-FLOAT TECHNOLOGY)	1	

439. Left NH yellow decal MD #360421 superseded by left NH clear decal MD #368424. Order decal MD #360421 until stock is depleted, then order decal MD #368424.
440. Right NH yellow decal MD #360422 superseded by right NH clear decal MD #368425. Order decal MD #360422 until stock is depleted, then order decal MD #368425.
441. Left NH yellow decal MD #360446 superseded by left NH decal MD #368386. Order decal MD #360446 until stock is depleted, then order decal MD #368386.
442. Right NH yellow decal MD #360447 superseded by right NH decal MD #368394. Order decal MD #360447 until stock is depleted, then order decal MD #368394.

105 Decals – French

1

2

3

4

1036707

DECALS – FRENCH

Ref	Part Number	Description	Qty	Serial Number
1	340049	DECAL – OIL, IMPORTANT, FRENCH		
2	245433	DECAL – IMPORTANT: GUARDS, FRENCH		
3	245432	DECAL – RH DRAPER TENSION, FRENCH		
4	245428	DECAL – LH DRAPER TENSION, FRENCH		

106 Decals – Portuguese

1

2

3

4

1036719

DECALS – PORTUGUESE

Ref	Part Number	Description	Qty	Serial Number
1	340051	DECAL – OIL, IMPORTANT, PORTUGUESE		
2	220817	DECAL – IMPORTANT: GUARDS, PORTUGUESE		
3	220836	DECAL – RH DRAPER TENSION, PORTUGUESE		
4	220824	DECAL – LH DRAPER TENSION, PORTUGUESE		

107 Decals – Russian

1

2

РЕГУЛИРОВКА НАТЯЖЕНИЯ ПОЛОТНА
ПОВОРАЧИВАЙТЕ БОЛТ (1) ДЛЯ НАТЯЖЕНИЯ ПОЛОТНА ПОКА БЕЛЫЙ ИНДИКАТОР (2), НЕ ПЕРЕМЕСТИТСЯ В СЕРЕДИНУ ПРОРЕЗИ (3) С ВНУТРЕННЕЙ СТОРОНЫ

3

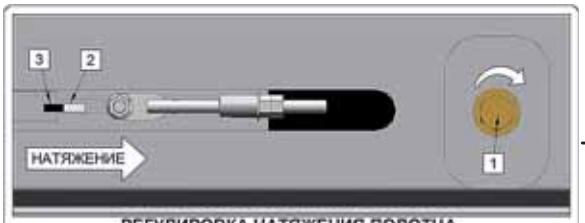

РЕГУЛИРОВКА НАТЯЖЕНИЯ ПОЛОТНА
ПОВОРАЧИВАЙТЕ БОЛТ (1) ДЛЯ НАТЯЖЕНИЯ ПОЛОТНА ПОКА БЕЛЫЙ ИНДИКАТОР (2), НЕ ПЕРЕМЕСТИТСЯ В СЕРЕДИНУ ПРОРЕЗИ (3) С ВНУТРЕННЕЙ СТОРОНЫ

4

1036727

DECALS – RUSSIAN

Ref	Part Number	Description	Qty	Serial Number
1	340052	DECAL – OIL, IMPORTANT, RUSSIAN		
2	220832	DECAL – IMPORTANT: GUARDS, RUSSIAN		
3	220834	DECAL – RH DRAPER TENSION, RUSSIAN		
4	220831	DECAL – LH DRAPER TENSION, RUSSIAN		

108 Decals – Spanish

1

2

3

4

1036716

DECALS – SPANISH

Ref	Part Number	Description	Qty	Serial Number
1	340050	DECAL – OIL, IMPORTANT, SPANISH		
2	220807	DECAL – IMPORTANT: GUARDS, SPANISH		
3	220835	DECAL – RH DRAPER TENSION, SPANISH		
4	220814	DECAL – LH DRAPER TENSION, SPANISH		

109 (Option) Brace Tube Kits

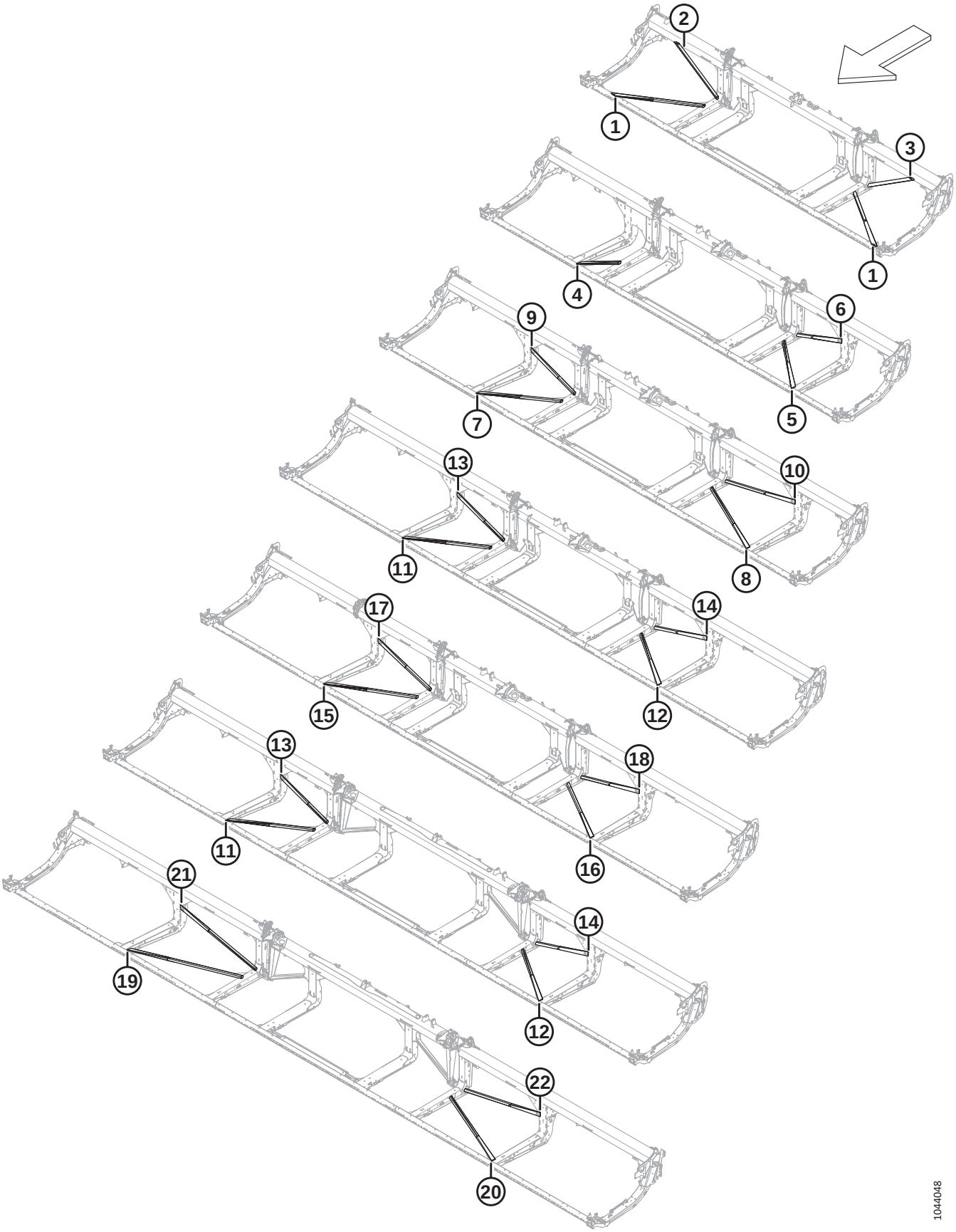

(OPTION) BRACE TUBE KITS

IMPORTANT:

Kits provided by MacDon Industries Ltd. in order to assist you in fixing damage caused by the end user to certain machinery manufactured by MacDon Industries Ltd. By receiving and installing these parts you assume all risk and liability of any nature arising out of the installation of this part. MacDon Industries Ltd. and its affiliates disclaim any and all liability arising from installation of this part. If installation of this part requires welding, such welding should be performed by an individual certified by an accredited institute in your jurisdiction with the necessary welding qualifications and/or certifications.

NOTE:

Brace kits can be used on single or double knife and regular or split frames.

Ref	Part Number	Description	Qty	Serial Number
1	**368699**	**KIT – TUBE DIAG BRACE, 25 HOR**	**2**	
2	**368700**	**KIT – TUBE DIAG BRACE, 25 V RH**	**1**	
3	**368701**	**KIT – TUBE DIAG BRACE, 25 V LH**	**1**	
4	**368702**	**KIT – TUBE DIAG BRACE, 30 H RH**	**1**	
5	**368703**	**KIT – TUBE DIAG BRACE, 30 H LH**	**1**	
6	**368704**	**KIT – TUBE DIAG BRACE, 30 V RH**	**1**	
7	**368705**	**KIT – TUBE DIAG BRACE, 35 H RH**	**1**	
8	**368707**	**KIT – TUBE DIAG BRACE, 35 H LH**	**1**	
9	**368706**	**KIT – TUBE DIAG BRACE, 35 V RH**	**1**	
10	**368708**	**KIT – TUBE DIAG BRACE, 35 V LH**	**1**	
11	**368709**	**KIT – TUBE DIAG BRACE, 40/45 H RH**	**1**	
12	**368711**	**KIT – TUBE DIAG BRACE, 40/45 H LH**	**1**	
13	**368710**	**KIT – TUBE DIAG BRACE, 40/45 V RH**	**1**	
14	**368712**	**KIT – TUBE DIAG BRACE, 40/45 V LH**	**1**	
15	**368713**	**KIT – TUBE DIAG BRACE, 41 H RH**	**1**	
16	**368715**	**KIT – TUBE DIAG BRACE, 41 H LH**	**1**	
17	**368714**	**KIT – TUBE DIAG BRACE, 41 V RH**	**1**	
18	**368716**	**KIT – TUBE DIAG BRACE, 41 V LH**	**1**	
19	**368717**	**KIT – TUBE DIAG BRACE, 50 H RH**	**1**	
20	**368719**	**KIT – TUBE DIAG BRACE, 50 H LH**	**1**	
21	**368718**	**KIT – TUBE DIAG BRACE, 50 V RH**	**1**	
22	**368720**	**KIT – TUBE DIAG BRACE, 50 V LH**	**1**	

110 (Option) ContourMax™ – Outer Contour Wheels

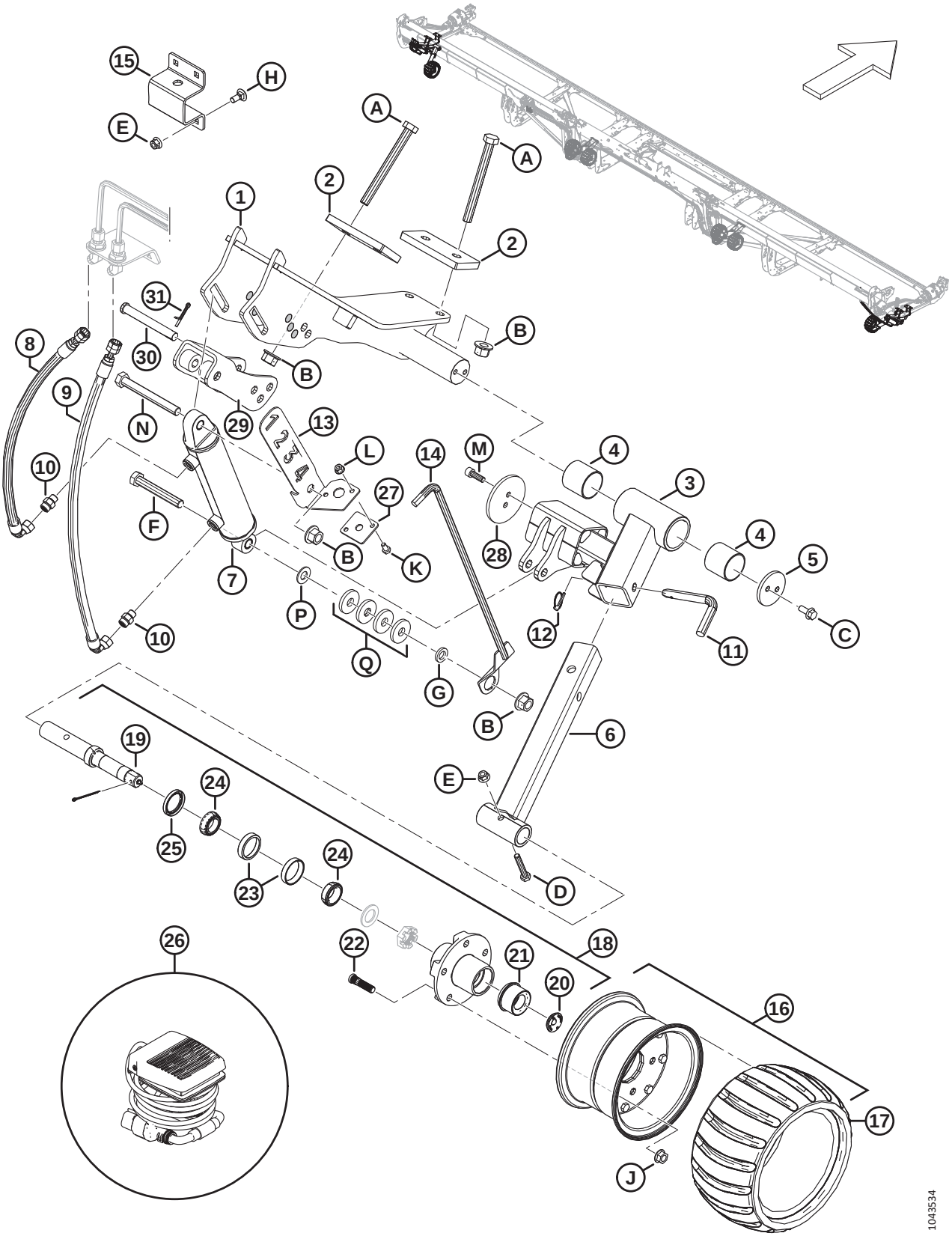

(OPTION) CONTOURMAX™ – OUTER CONTOUR WHEELS

Ref	Part Number	Description	Qty	Serial Number
	B7480	KIT – CONTOURMAX CONTOUR WHEELS [443]		
1	360875	MOUNT WELDT – LH OUTER	1	
	360987	MOUNT WELDT – RH OUTER	1	
2	233874	PLATE – BACKING 85 MM	4	
3	360992	TOP OUTER ARM – ASSY [444]	2	
4	313020	BUSHING – PLASTIC	4	
5	233870	RETAINER	2	
6	313914	LOWER OUTER SUPPORT – WELDT	2	
7	313012	CYLINDER – HYD (LH) [445]	1	
	313794	SEAL KIT		
	258391	BUSHING		
	313011	CYLINDER – HYD (RH) [446]	1	
	313793	SEAL KIT		
	258391	BUSHING		
8	323995	HOSE – HYD	2	
9	323994	HOSE – HYD	2	
10	135778	FITTING – ADAPTER	4	
11	313921	PIN – LOCKING	2	
12	50193	PIN – LYNCH	2	
13	NSS	BRACKET – INDICATOR (LH ONLY) [447]	1	
	360358	KIT – ASSY, CONTMAX GAUGE SERV [448]	1	
14	NSS	HEIGHT INDICATOR – WELDT (LH ONLY) [447]	1	
	360358	KIT – ASSY, CONTMAX GAUGE SERV [448]	1	
15	313922	STRAP – WHEEL STORAGE (LH ONLY) [449]	1	
16	313368	CONTOUR WHEEL – ASSY [450]	2	

443. The kit includes all listed inner and outer wheel parts to complete the install on a ContourMax™ ready header. If your header is not factory configured you will also need one of the following bundles, refer to Sections *89 Hydraulics – ContourMax™, Contour Wheels (FD225 and FD230), page 231* to *91 Hydraulics – ContourMax™, Contour Wheels (FD240, FD241, FD245, and FD250), page 239*. Kits are available through Whole Goods only.
444. The arm assembly includes two plastic bushings (MD #313020).
445. Left hydraulic cylinder.
446. Right hydraulic cylinder.
447. Indicator bracket (MD #340703) and height indicator (MD #313447) have been superseded with service kit (MD #360358).
448. For service parts, refer to Section *112 (Option) ContourMax™ – Gauge Service Kit, page 293*.
449. Left outer contour wheel only.
450. The wheel assembly includes tire (MD #313366).

(OPTION) CONTOURMAX™ – OUTER CONTOUR WHEELS

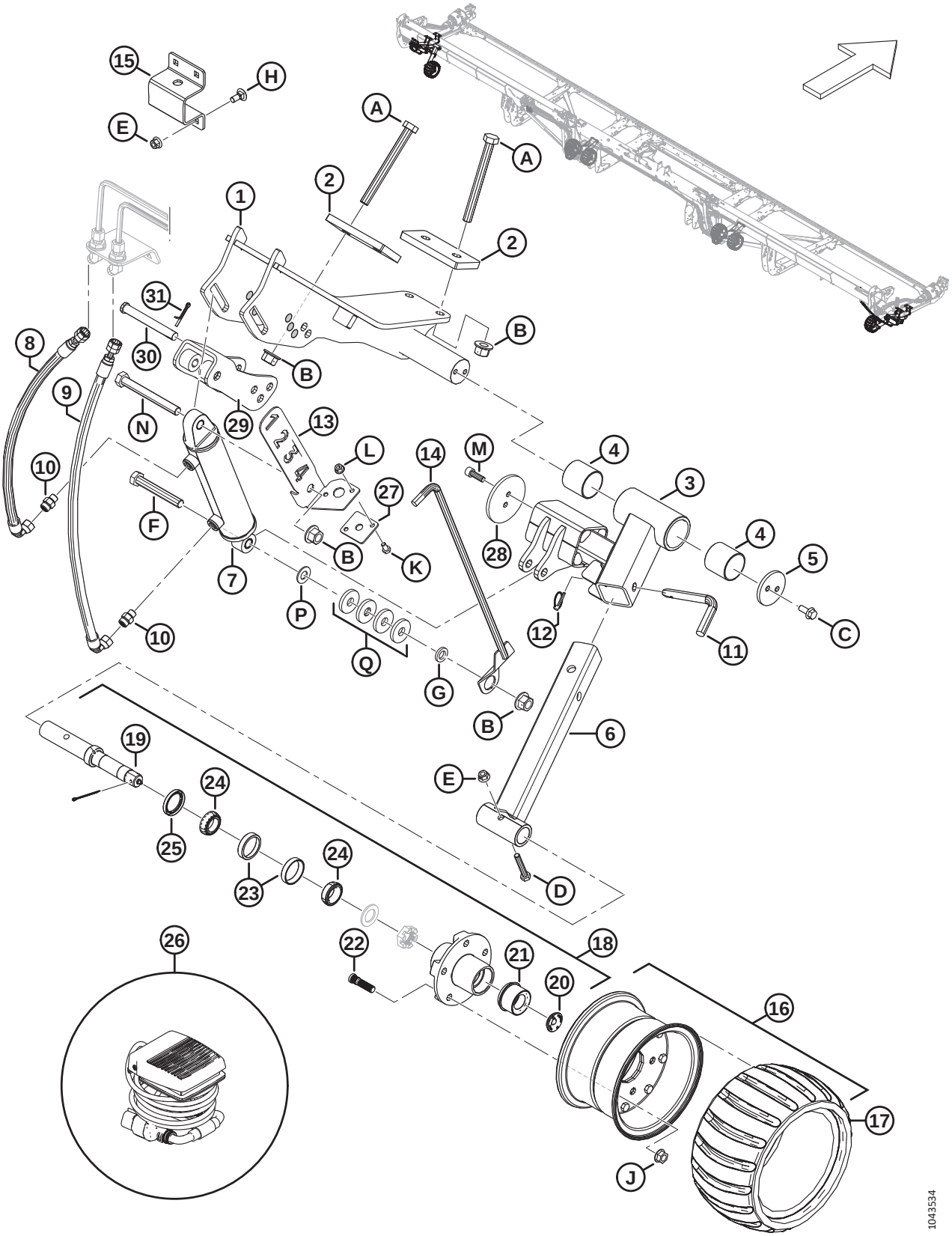

Ref	Part Number	Description	Qty	Serial Number
17	313366	TIRE – CONTOUR WHEEL	2	
18	313114	SPINDLE – ASSY [451]	2	
19	313859	SPINDLE – SHAFT	2	
20	284705	PLUG – RUBBER	2	
21	284706	CAP – EZ LUBE	2	
22	284707	STUD	10	
23	284708	BEARING – CUP, 47MM	2	
24	284709	BEARING – CONE, 44MM	2	
25	284710	SEAL	2	
26	314581	HARNESS – FOOT PEDAL	1	
27	313441	GUIDE – INDICATOR	1	
28	233920	RETAINER – BOLT ON 3.75 IN. DISC	2	
29	319878	ADJ WELDT – CONTOURMAX	2	486190–
	233975	ADJ WELDT – CONTOURMAX (2023–PRIOR, SERVICE ONLY) [452]	2	–486189
30	113813	PIN – CLEVIS, 15.71 MM, 115 MM, ZN PL	2	
31	18608	PIN – COTTER 3/16 DIA X 1.5 ZP	2	
A	320122	BOLT – HEX HD M16 X 2 X 160-10.9-ZINC		
B	136440	NUT – HEX FLG CTR LK M16 X 2-10-AA1J		
C	135783	BOLT – HEX FLG HD TFL M10 X 1.5 X 25-10.9-AA1J		
D	184664	BOLT – HEX HD M10 X 1.5 X 60-8.8-AA1J		
E	135799	NUT – HEX FLG CTR LOC M10 X 1.5-10		
F	136159	BOLT – HEX HD M16 X 2 X 110-8.8-AA1J (LH ONLY) [453]		
	152602	BOLT – HEX HD M16 X 2 X 80-10.9-AA1J (RH ONLY) [454]		
G	103361	WASHER – FLAT (LH ONLY) [453]		
H	135785	BOLT – RHSN M10 X 1.5 X 25-8.8-AA1J		
J	188470	NUT – FLG DT SMFC 1/2-20 UNF GR 8 AA1J		
K	50139	BOLT – HEX HD TFL M8 X 1.25 X 16-8.8-AA1J		
L	135337	NUT – HEX FLG CTR LK M8 X 1.25-8-AA1J		
M	135401	SCREW – HEX SOC HD TFL M10 X 1.5 X 30-8.8-AA1J		
N	184677	BOLT – HEX HD M16 X 2 X 140-8.8-AA1J		

451. The spindle assembly includes spindle shaft (MD #313859), rubber plug (MD #284705), EZ lube cap (MD #284706), five studs (MD #284707), 47 mm cup bearing (MD #284708), 44 mm cone bearing (MD #284709), seal (MD #284710), slotted nut (NSS), and washer (NSS).
452. Service part only for model year 2023 and prior.
453. Left outer contour wheel only.
454. Right outer contour wheel only.

(OPTION) CONTOURMAX™ – OUTER CONTOUR WHEELS

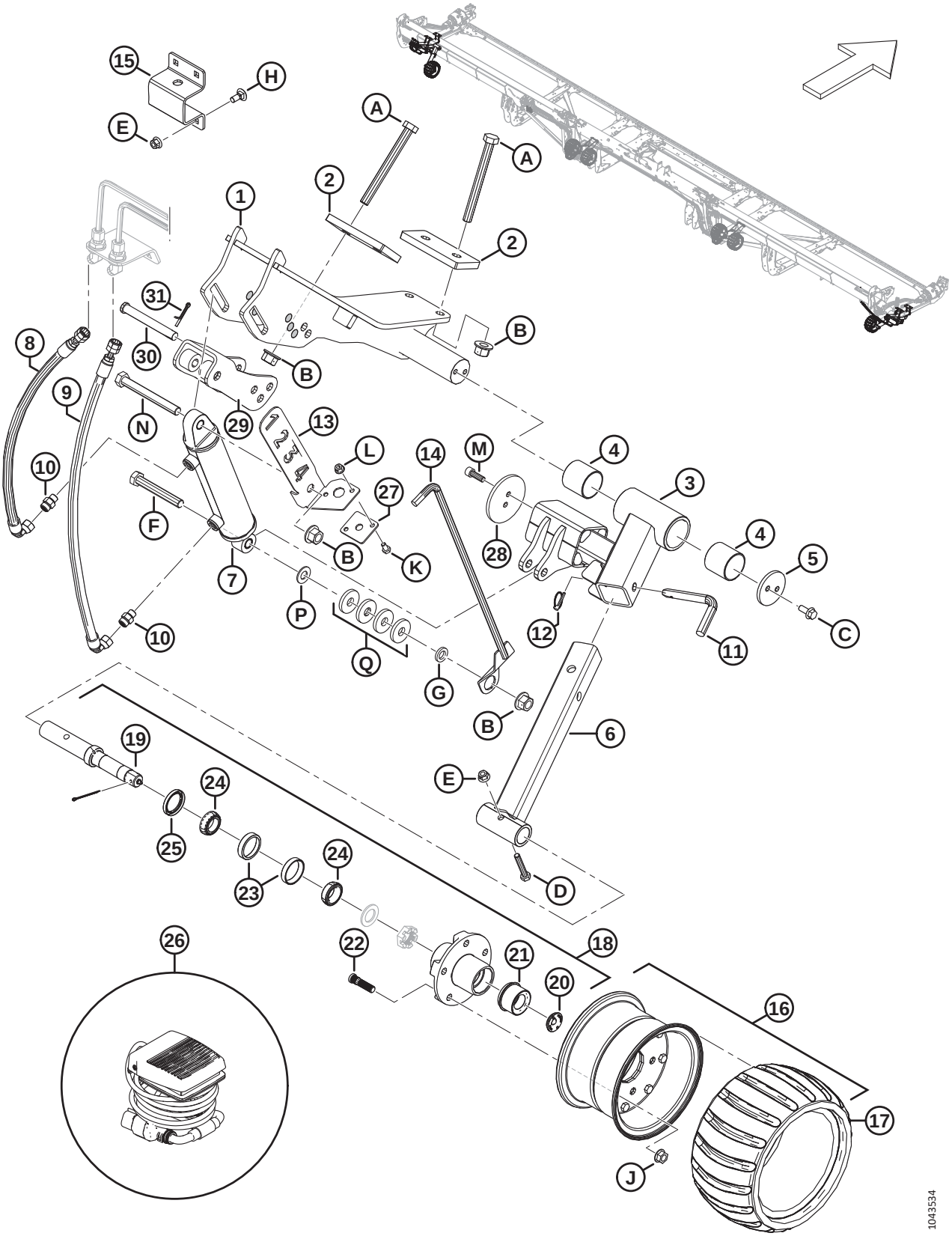

Ref	Part Number	Description	Qty	Serial Number
P	18600	WASHER – FLAT SAE 21/32 ID X 1 5/16 OD AA1J (LH ONLY) [453]		
Q	4762	WASHER – FLAT, 2/3 IN. ID, 1 13/16 IN. OD, 1/4 IN. THK (LH ONLY) [453]		

111 (Option) ContourMax™ – Inner Contour Wheels

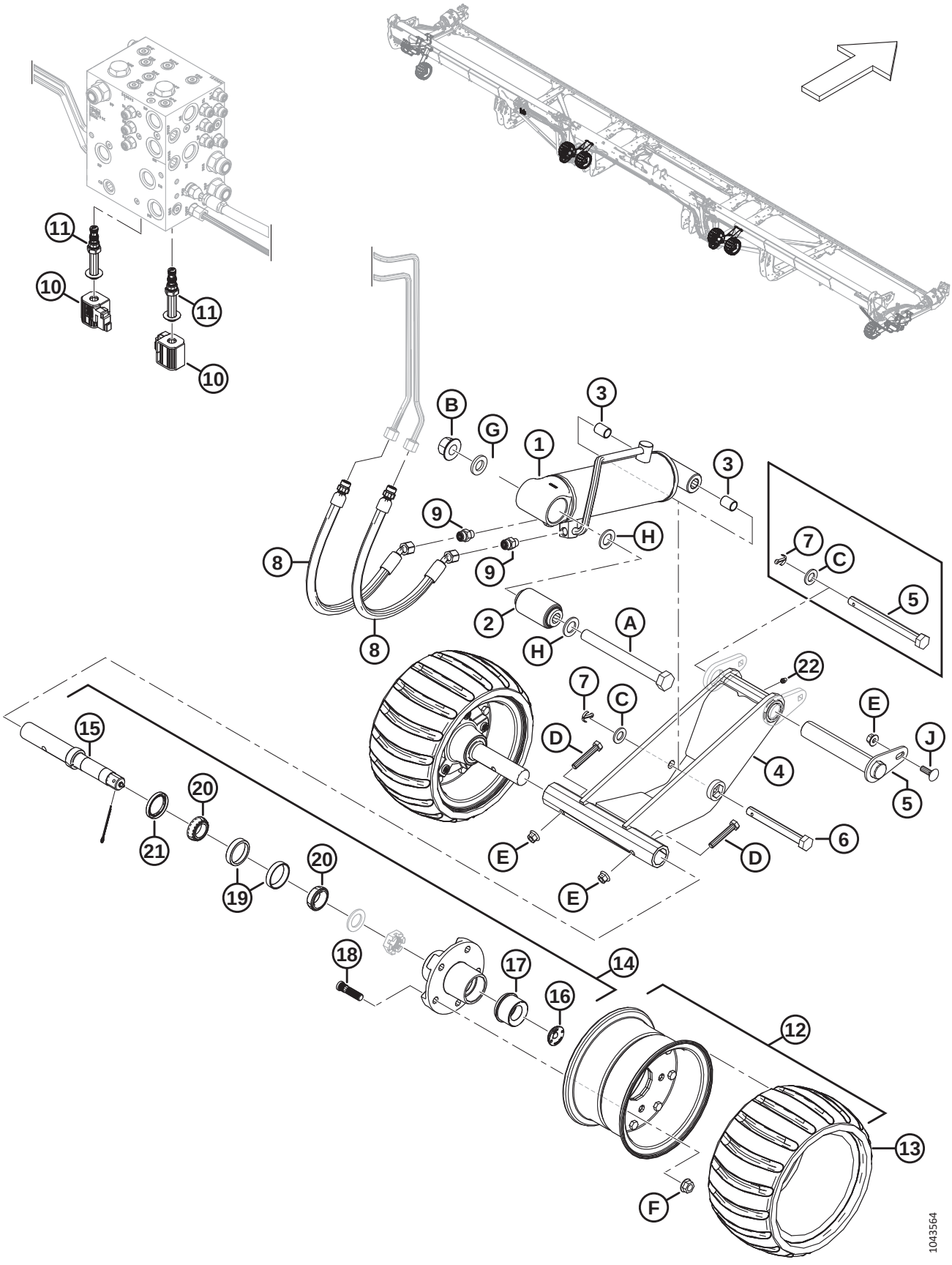

(OPTION) CONTOURMAX™ – INNER CONTOUR WHEELS

Ref	Part Number	Description	Qty	Serial Number
	B7480	KIT – CONTOURMAX CONTOUR WHEELS [455]		
1	313776	LH CYLINDER ISOLATOR – ASSY [456]	1	
	313791	SEAL KIT		
	313777	RH CYLINDER ISOLATOR – ASSY [456]	1	
	313792	SEAL KIT		
2	313007	BUSHING – BONDED RUBBER	2	
3	258391	BUSHING	4	
4	360774	ASSEMBLY – CONTOURMAX W/ ZERK [457]	2	
5	360714	PIN – CONTOURMAX [458]	2	
	360812	KIT – 1.25 IN. CONTOURMAX PIN [459]	A/R	
	360818	KIT – 5/8 IN. CONTOURMAX PIN [460]	A/R	
	313748	PIN – HEX HD 5/8 X 7 IN LG ZINC [461]	A/R	
6	313753	PIN – HEX HD 5/8 X 5.25 LG ZINC	2	
7	18648	PIN – COTTER 3/16 DIA X 1.25 ZP	4	
8	283783	HOSE – HYD	4	
	135865	O-RING – Ø1.78 X Ø9.25		
9	135778	FITTING – ADAPTER	4	
10	287449	COIL – 12VDC - .625IN	2	
11	287450	VALVE – POPPET	2	
12	313368	CONTOUR WHEEL – ASSY [462]	4	

455. The kit includes all listed inner and outer wheel parts to complete the install on a ContourMax™ ready header. If your header is not factory configured you will also need one of the following bundles, refer to Sections *89 Hydraulics – ContourMax™, Contour Wheels (FD225 and FD230), page 231* to *91 Hydraulics – ContourMax™, Contour Wheels (FD240, FD241, FD245, and FD250), page 239*. Kits are available through Whole Goods only.
456. The cylinder isolator assembly includes bonded rubber bushing (MD #313007) and two bushings (MD #258391).
457. Includes lube fitting (MD #18671) and 100-hour grease decal (MD #115759).
458. ContourMax™ Pin (MD #360714) for model year 2024 and later includes a welded lug (NSS) and 1.25 inch pivot pin (NSS). To service model year 2023 and prior headers with the model year 2024 wheel assembly (MD #360774), order 1.25 inch ContourMax™ Pin Service kit (MD #360812) or 5/8 inch ContourMax™ Pin Service kit (MD #360818).
459. The 1.25 inch ContourMax™ Pin Service kit is used to rework the header inner legs to allow the use of the larger pin (MD #360714) to secure the wheel assembly (MD #360774) to the header leg. The kit includes one ContourMax™ pin (MD #360714), two service lugs (MD #360713), two washer templates (MD #360810), hardware (MD #136211, 135799), and instructions.
460. The 5/8 inch ContourMax™ Pin Service kit is used to allow the use of the smaller (model year 2023 and prior) 5/8 inch hex head pin (MD #313748) to secure the wheel assembly (MD #360774) to the header leg. The kit includes one pin (MD #313748), one tube spacer (MD #360819), one cotter pin (MD #18648), two washer plates (NSS), hardware (MD #184717, 319544), and instructions.
461. Service part only for superseded wheel assembly (MD #323478). For new wheel assembly (MD #360774), order pin (MD #360714) or service kits (MD #360812, 360818).
462. The wheel assembly includes tire (MD #313366).

(OPTION) CONTOURMAX™ – INNER CONTOUR WHEELS

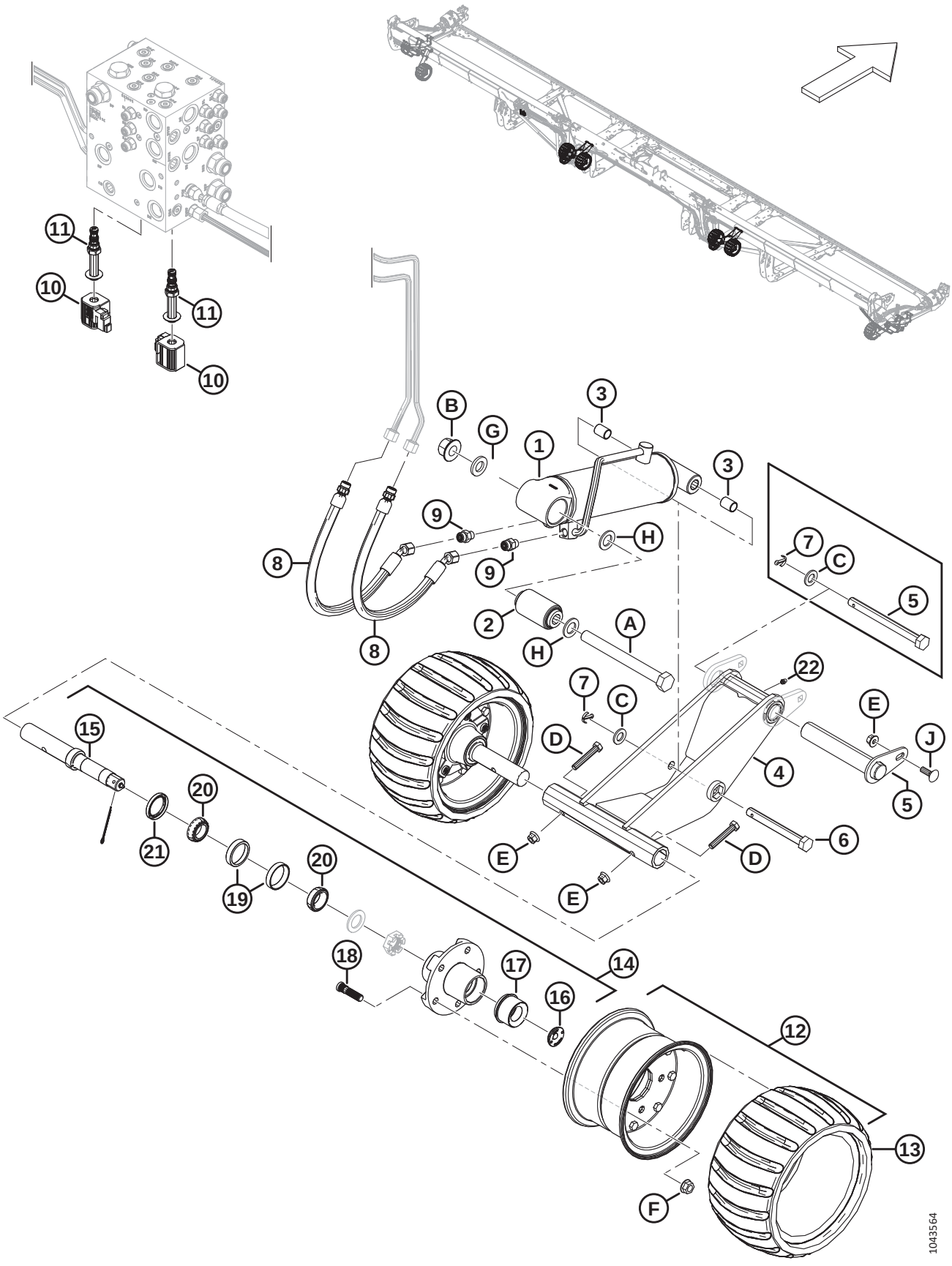

Ref	Part Number	Description	Qty	Serial Number
13	313366	TIRE – CONTOUR WHEEL	4	
14	313114	SPINDLE – ASSY [463]	4	
15	313859	SPINDLE – SHAFT	4	
16	284705	PLUG – RUBBER	4	
17	284706	CAP – EZ LUBE	4	
18	284707	STUD	20	
19	284708	BEARING – CUP, 47MM	4	
20	284709	BEARING – CONE, 44MM	4	
21	284710	SEAL	4	
22	18671	FITTING – LUBE 1/4 - 28 UNF	2	
A	320331	BOLT – HEX HD M20 X 2.5 X 200-10.9-ZINC		
B	136122	NUT – HEX FLG CTR LOC M20 X 2.5-10-AA1J		
C	184717	WASHER – FLAT REG M16-200HV-AA1J		
D	184664	BOLT – HEX HD M10 X 1.5 X 60-8.8-AA1J		
E	135799	NUT – HEX FLG CTR LOC M10 X 1.5-10z		
F	188470	NUT – FLG DT SMFC 1/2-20 UNF GR 8 AA1J		
G	21540	WASHER – HARD ASTM F436M20-340HV-AB2C		
H	136477	WASHER – FLAT REG M20-200HV		
J	184662	BOLT – RHSN TFL M10 X 1.5 X 30-8.8-AA1J		

463. The spindle assembly includes spindle shaft (MD #313859), rubber plug (MD #284705), EZ lube cap (MD #284706), five studs (MD #284707), 47 mm cup bearing (MD #284708), 44 mm cone bearing (MD #284709), and seal (MD #284710).

112 (Option) ContourMax™ – Gauge Service Kit

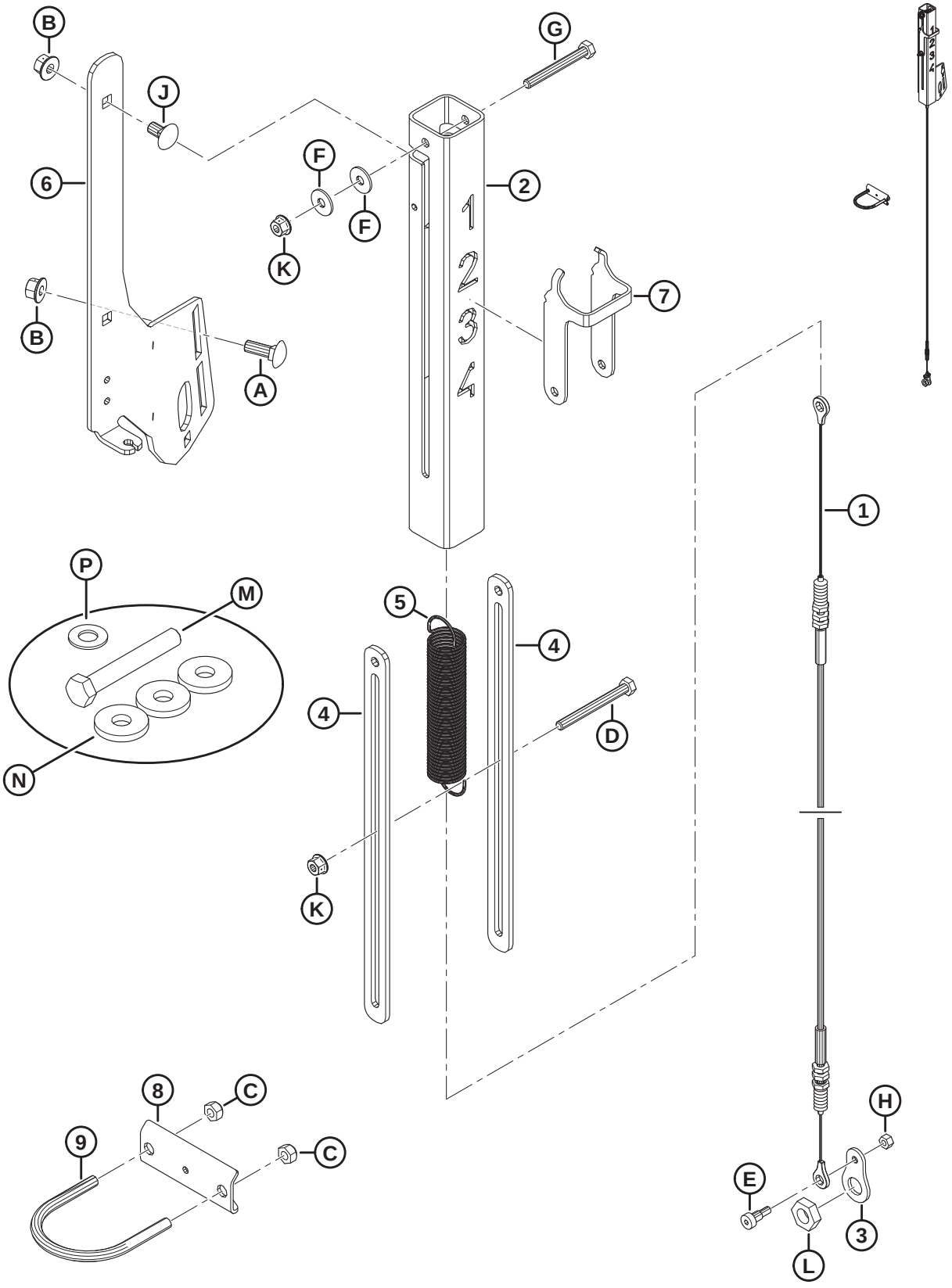

(OPTION) CONTOURMAX™ – GAUGE SERVICE KIT

Ref	Part Number	Description	Qty	Serial Number
	360358	KIT – ASSY, CONTMAX GAUGE SERV		
1	360559	CABLE – CONTOURMAX	1	
2	360551	TUBE – CONTOURMAX INDICATOR	1	
3	360526	PLATE – CABLE CONNECTION	1	
4	233950	SPACER – CONTOURMAX INDICATOR	2	
5	233906	SPRING – CONTOURMAX	1	
6	233900	BRACKET – CONTOURMAX INDICATOR	1	
7	233891	INDICATOR – CONTOUR WHEEL	1	
8	233964	ANCHOR – INDICATOR CABLE	1	
9	47225	BOLT – U	1	
A	184662	BOLT – RHSN TFL M10 X 1.5 X 30-8.8-AA1J		
B	135799	NUT – HEX FLG CTR LOC M10 X 1.5-10		
C	18669	NUT-HEX LK DT 3/8-16 UNC GR5 AA1J		
D	252421	BOLT-HEX HD M 8X 1.25 X 80-8.8-AA2L		
E	197135	SCREW – HEX SOC HD SHLDR M8 X 10		
F	184709	WASHER – FLAT LARGE M8-200HV		
G	184656	BOLT – HEX HD M8 X 1.25 X 70-8.8-AA1J		
H	136773	NUT – HEX CTR LOC M6 X 1-8-AA1J		
J	136178	BOLT – RHSN M10 X 1.5 X 20-8.8-AA1J		
K	135337	NUT – HEX FLG CTR LK M8 X 1.25-8-AA1J		
L	320218	NUT – HEX THIN M16 X 2-SPCL-5-ZINC		
M	136159	BOLT – HEX HD M16 X 2 X 110-8.8-AA3L [464]		
N	4762	WASHER – FLAT [464]		
P	18600	WASHER – FLAT SAE 21/32 ID X 5/16 OD AA1J [464]		

464. Used for model year 2020 and 2021 only.

113 (Option) ContourMax™ – Height Sensing – New Holland

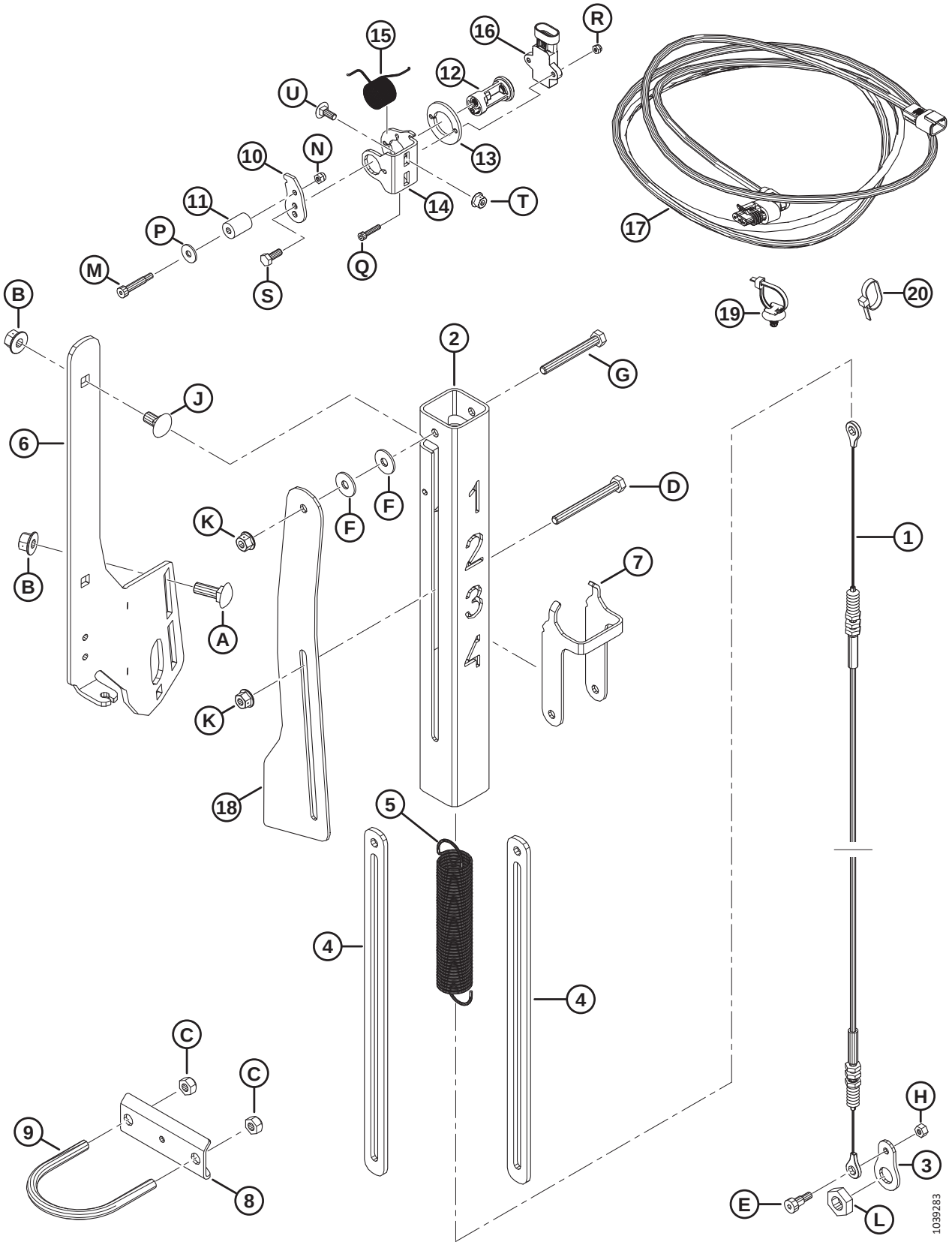

(OPTION) CONTOURMAX™ – HEIGHT SENSING – NEW HOLLAND

NOTE:

The ContourMax™ Height Sensing kit is required for model year 2019 and later New Holland combine headers equipped with the ContourMax™ Contour Wheels option.

Ref	Part Number	Description	Qty	Serial Number
	360358	KIT – ASSY, CONTMAX GAUGE SERV		
	B7350	KIT – CONTOURMAX SENSOR [465]		
1	360559	CABLE – CONTOURMAX	1	
2	360551	TUBE – CONTOURMAX INDICATOR	1	
3	360526	PLATE – CABLE CONNECTION	1	
4	233950	SPACER – CONTOURMAX INDICATOR	2	
5	233906	SPRING – CONTOURMAX	1	
6	233900	BRACKET – CONTOURMAX INDICATOR	1	
7	233891	INDICATOR – CONTOUR WHEEL	1	
8	233964	ANCHOR – INDICATOR CABLE	1	
9	47225	BOLT – U	1	
10	340956	ARM – SENSOR	1	
11	340289	ROLLER – 5/8 IN. O.D.	1	
12	352163	ASSY – SENSOR PIVOT	1	
13	352001	SPACER – SENSOR	1	
14	340955	SUPPORT – SENSOR	1	
15	340954	SPRING – TORSION	1	
16	500303	SENSOR – ROTARY, DUAL CONTACTLESS	1	
17	323694	HARNESS – EXT. CONTOUR POS.	1	
18	323499	LINK – CONTOURMAX SENSOR	1	
19	136655	FASTENER – FIR TREE MT W/ TIE	2	
20	21763	FASTENER – CABLE TIE, BLACK	13	
A	184662	BOLT – RHSN TFL M10 X 1.5 X 30-8.8-AA1J		
B	135799	NUT – HEX FLG CTR LOC M10 X 1.5-10		
C	18669	NUT-HEX LK DT 3/8-16 UNC GR5 AA1J		
D	252421	BOLT-HEX HD M 8X 1.25 X 80-8.8-AA2L		
E	197135	SCREW – HEX SOC HD SHLDR M8 X 10		
F	184709	WASHER – FLAT LARGE M8-200HV		
G	184656	BOLT – HEX HD M8 X 1.25 X 70-8.8-AA1J		
H	136773	NUT – HEX CTR LOC M6 X 1-8-AA1J		
J	136178	BOLT – RHSN M10 X 1.5 X 20-8.8-AA1J		
K	135337	NUT – HEX FLG CTR LK M8 X 1.25-8-AA1J		

465. Kits are available through Whole Goods only.

(OPTION) CONTOURMAX™ – HEIGHT SENSING – NEW HOLLAND

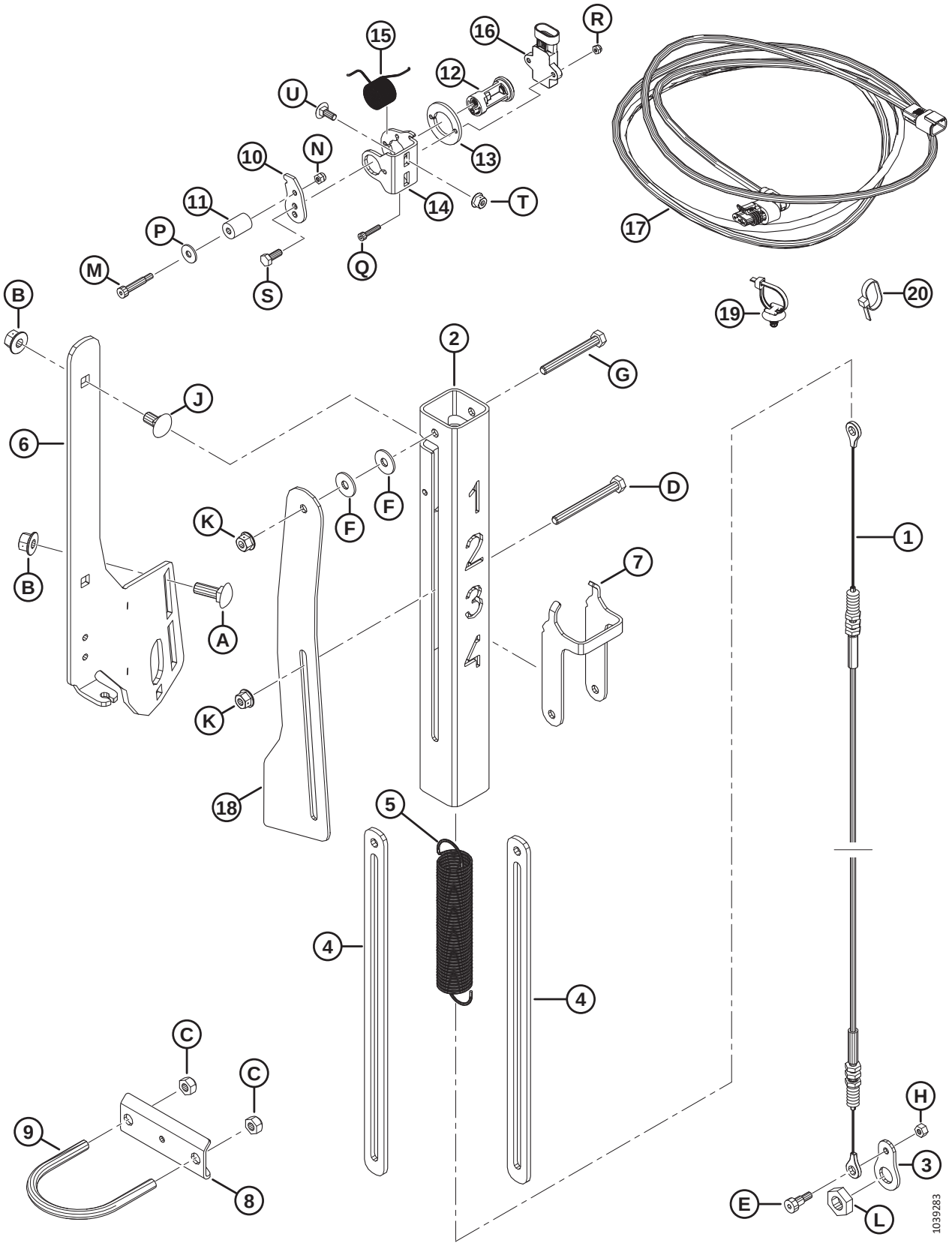

Ref	Part Number	Description	Qty	Serial Number
L	320218	NUT – HEX THIN M16 X 2-SPCL-5-ZINC		
M	320409	SCREW – HEX SOC HD SHLD R6 X 25-M 5 X0.8 X 9.5-12.9-ZINC		
N	197230	NUT – HEX NYLOC M5 X 0.8-8-AA1J		
P	184706	WASHER – FLAT LARGE M6-200HV		
Q	320410	SCREW – HEX SOC HDM4 X 0.7 X 20-A2SS		
R	320390	NUT – HEX NYLOC M4 X0.7-8-A2-SS		
S	184642	BOLT – HEX HD TFL M6 X 1 X 16-8.8-AA1J		
T	152668	NUT – HEX FLG CTR LOC M6 X 1-8		
U	136748	BOLT – RHSN M6 X 1 X 16-8.8-ZINC		

114 (Option) Crop Lifters and Storage Rack

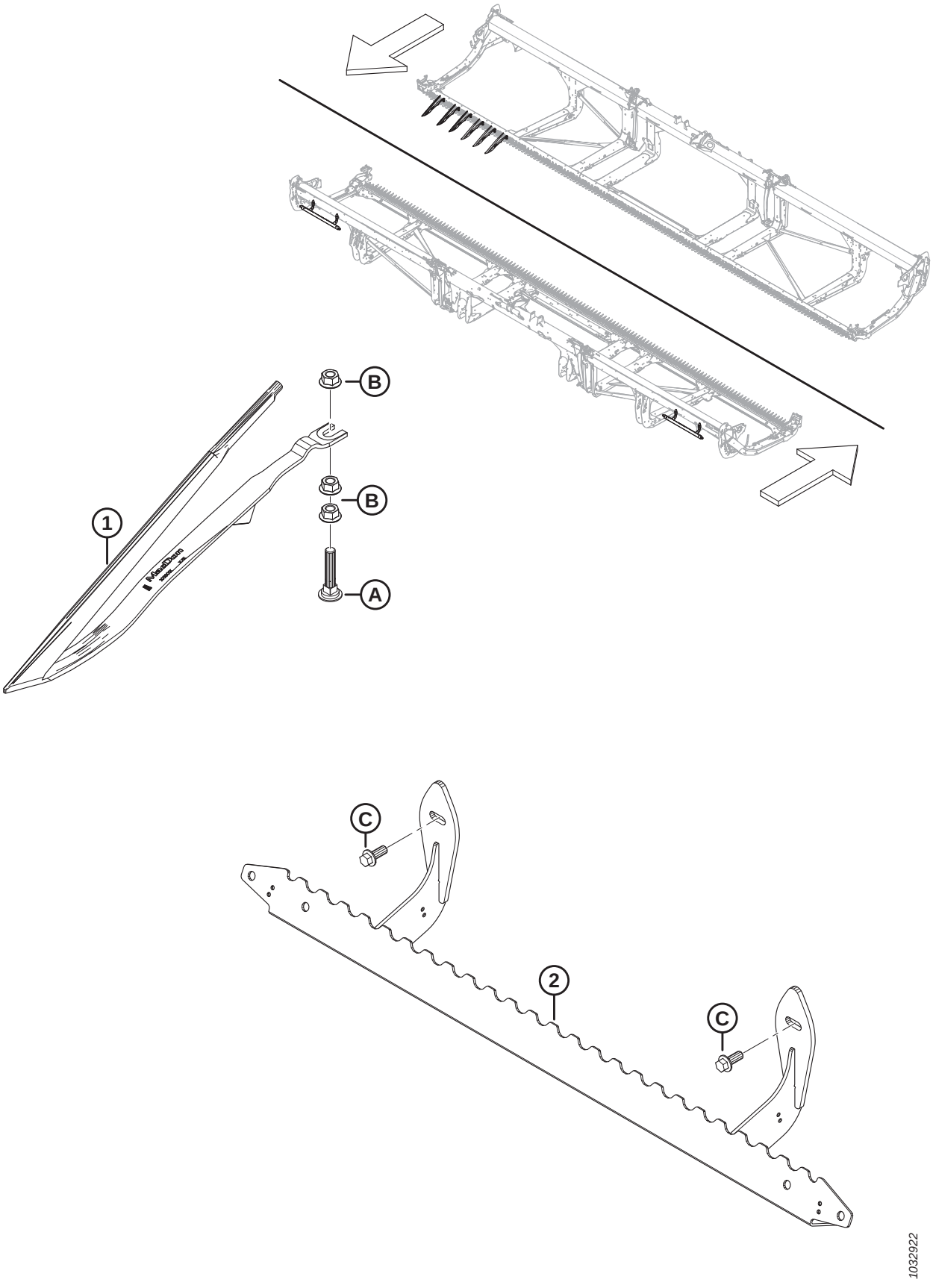

(OPTION) CROP LIFTERS AND STORAGE RACK

Ref	Part Number	Description	Qty	Serial Number
	B7022	KIT – CROP LIFTER [466]		
	B7023	KIT – LIFTER STORAGE RACK [467]		
1	233748	DEFLECTOR – CROP LIFTER	A/R	
2	233770	SUPPORT – LIFTER STORAGE WELDT	1	
A	226280	BOLT – RHSN SPCL M12 X 60-8.8		
B	136036	NUT – HEX SM FLG M12 X 1.75-8-AA1J		
C	136312	BOLT – HEX FLG HD TFL M10 X 1.5 X 25-10.9-AA1J		

466. Crop lifters are recommended for severely lodged cereal crops where the Operator wants maximum possible stubble height. Quantity of kits required varies depending on header size: FD225 and FD230 = 3 kits; FD235, FD240, and FD241 = 4 kits; FD245 and FD250 = 5 kits. Kits are available through Whole Goods only.
467. Quantities of Lifter Storage Rack kits required varies depending on header size. FD225 = 1 kit; FD230, FD235, FD240, FD241, FD245, and FD250 = 2 kits. Kits are available through Whole Goods only.

115 (Option) Divider Storage Bracket

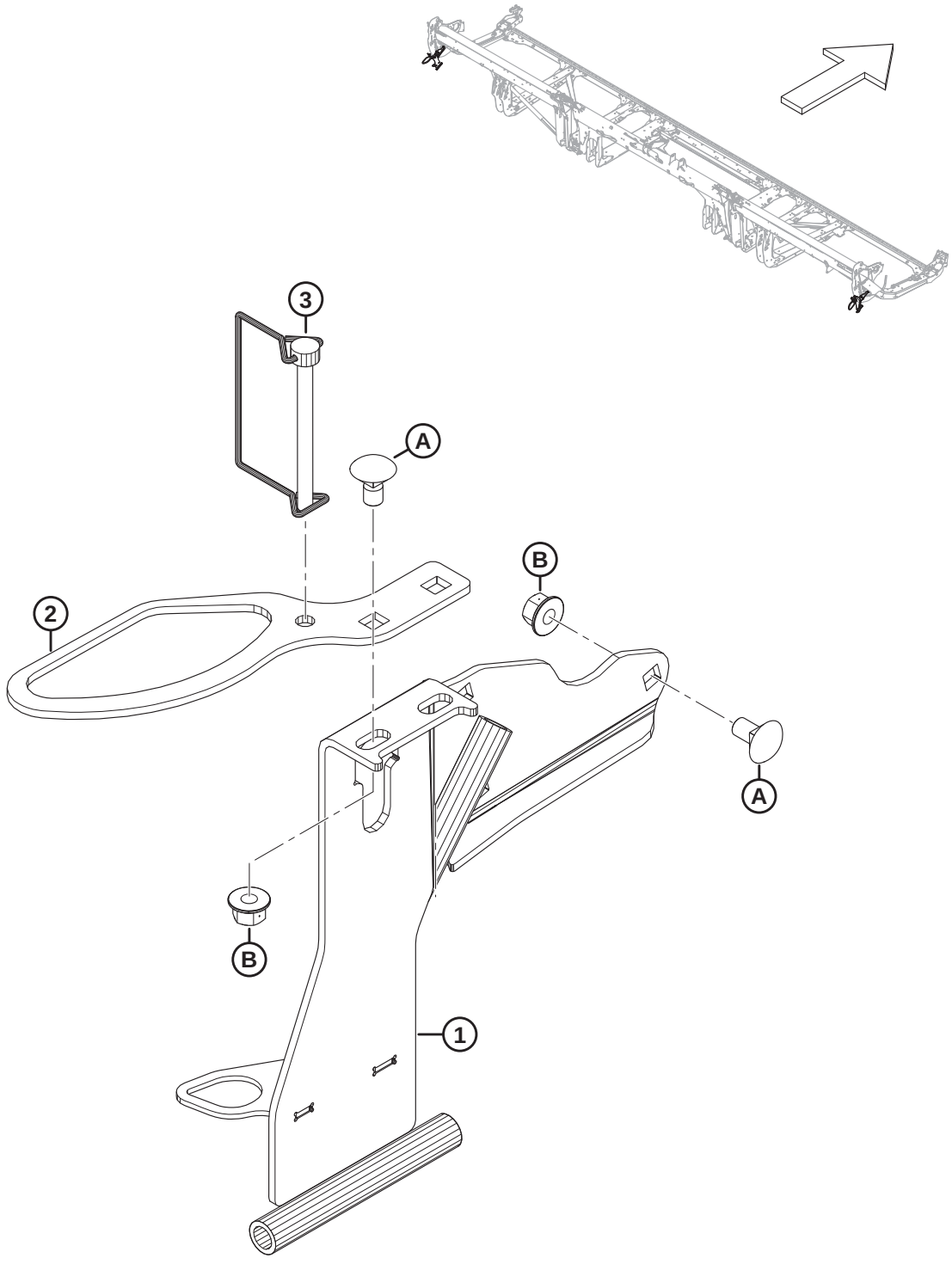

1032910

(OPTION) DIVIDER STORAGE BRACKET

Ref	Part Number	Description	Qty	Serial Number
	B7030	KIT – DIVIDER STORAGE BRACKET [468]		
1	313566	LH DIVIDER STORAGE – WELDT	1	
	313705	RH DIVIDER STORAGE – WELDT	1	
2	311464	SUPPORT – STORAGE RICE RODS	2	
3	136749	PIN – LYNCH	2	
A	136178	BOLT – RHSN M10 X 1.5 X 20-8.8-AA1J		
B	135799	NUT – HEX FLG CTR LOC M10 X 1.5-10		

468. Kits are available through Whole Goods only.

116 (Option) EasyMove™ – Slow Speed Transport, Base Kit and Stabilizer Wheels

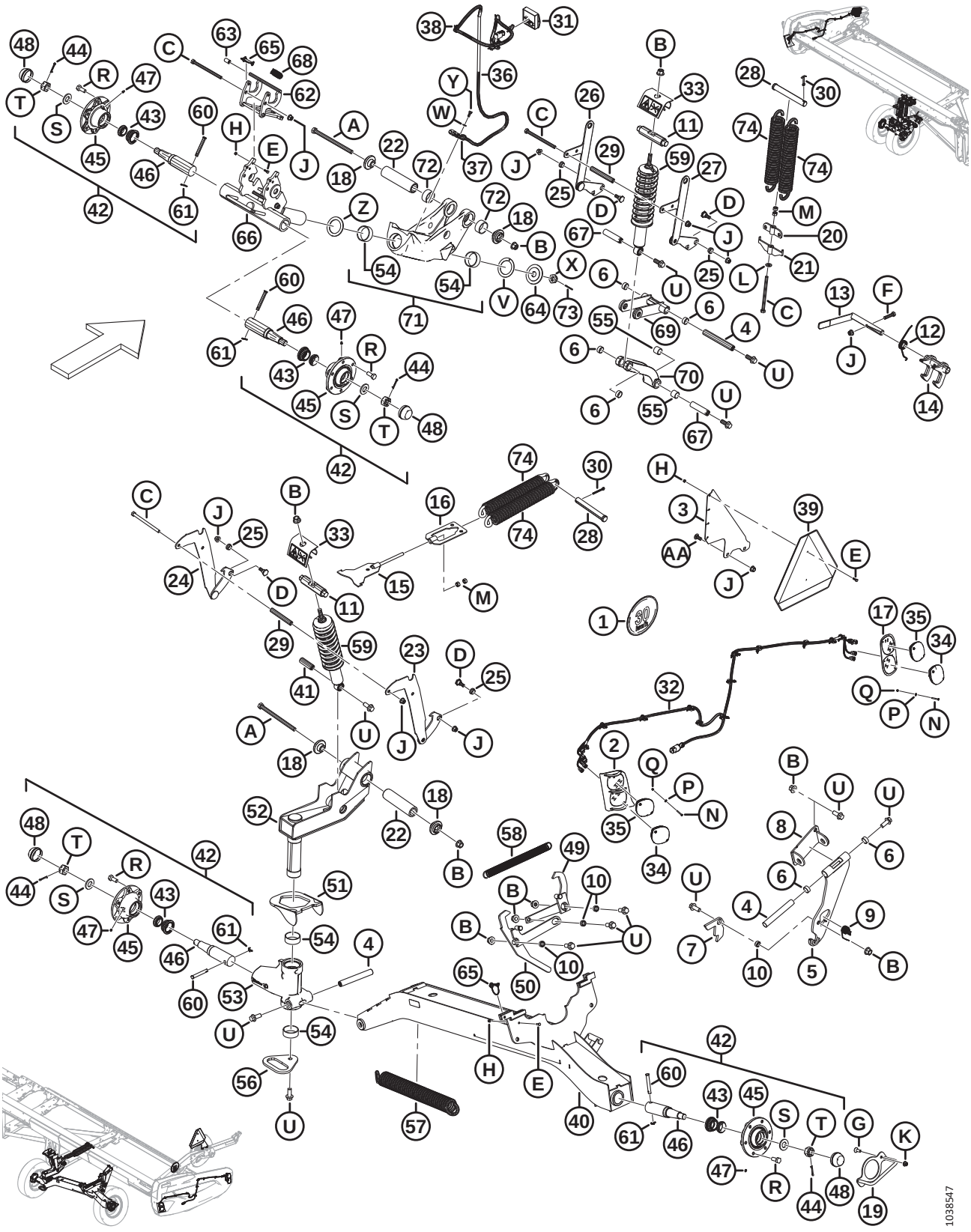

Ref	Part Number	Description	Qty	Serial Number
	B6288	EASYMOVE™ SLOW SPEED TRANSPORT – STABILIZER WHEELS AND BASE KIT [469]		
1	327561	KIT – DECALS, SIS BRACKET	1	
	193243	DECAL – SIS 30 KM/H, SMALL	1	
	193241	DECAL – SIS, 30 KM/H	1	
	193240	DECAL – SIS 20 MILE/H, SMALL	1	
	193242	DECAL – SIS 20 MILE/H	1	
2	327429	LIGHT BEZEL – WELDT, LH [470]	1	
	327179	LIGHT BEZEL – WELDT, RH [470]	1	
3	327428	LUG	1	
4	316794	PIN	3	
5	316358	SUPPORT – ASSY [471]	1	
6	210690	BUSHING – COMPOSITE	6	
7	303961	PLATE – LATCH	1	
8	327704	PIVOT – WELDT	1	
9	303379	SPRING – TORSION	1	
10	252958	SPACER	4	
11	316284	PIN	2	
12	316119	SPRING – TORSION	1	
13	316118	HANDLE – ASSY	1	
	287701	GRIP – HANDLE	1	
14	316110	LATCH – WELDT	1	
15	316096	SUPPORT – WELDT	1	
16	316095	SUPPORT – WELDT	1	
17	313406	BEZEL – LH FRONT [470]	1	
	313425	BEZEL – RH FRONT [470]	1	
18	303839	CASTING – PLATE	4	
19	303766	HANDLE – WELDT	1	
20	303693	SPRING TENSION SUPPORT – WELDT	1	
21	303691	SPRING ADJUST SUPPORT – WELDT	1	
22	303525	PIN – PIVOT	2	
23	327756	SUPPORT, HEIGHT ADJUST – WELDT, RH	1	
24	327755	SUPPORT, HEIGHT ADJUST – WELDT, LH	1	
25	303492	BUSHING – COMPOSITE	4	

469. Kits are available through Whole Goods only.
470. The bezels are mounted onto the header endshields with pan head screw (MD #320154), flat washer (MD #18798), and Nyloc hex nut (MD #197320).
471. The support assembly includes support (NSS) and two composite bushings (MD #210690).

(OPTION) EASYMOVE™ – SLOW SPEED TRANSPORT, BASE KIT AND STABILIZER WHEELS

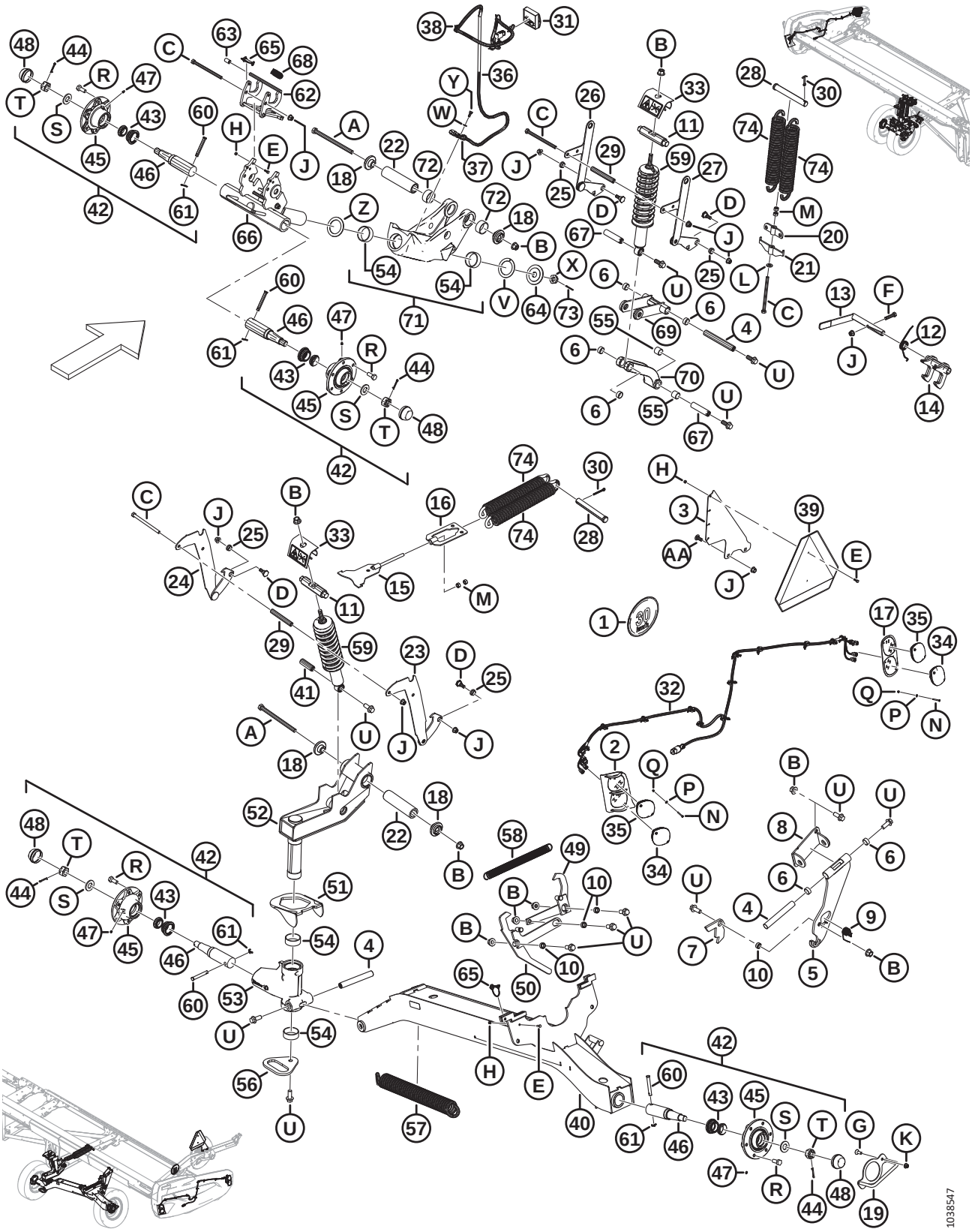

Ref	Part Number	Description	Qty	Serial Number
26	303491	SUPPORT, HEIGHT ADJUST – WELDT	1	
27	303486	SUPPORT, HEIGHT ADJUST – WELDT	1	
28	292692	PIN – CLEVIS	2	
29	210985	SPACER	2	
30	18609	PIN – COTTER 1/4 DIA X 2 ZP	2	
31	327255	MODULE – TRANSPORT LED W/ TAPE	1	
32	323049	HARNESS – TRANSPORT EXT LTS	2	
33	327089	ANTI PRY – ASSY	2	
34	316044	LIGHT – RED	2	
35	284215	LIGHT – AMBER	4	
36	284548	HARNESS – TRANSPORT EXT LEG	1	
37	135716	CLAMP – INSULATED 5/8 IN.	1	
38	21763	FASTENER – CABLE TIE, BLACK	7	
39	21032	SMV SIGN – METAL AND REFLECTOR	1	
40	327786	SUPPORT, AXLE – WELDT	1	
41	316793	PIN	1	
42	316330	HUB – ASSY [472]	4	
43	316851	KIT – WHEEL BEARING [473]	4	
44	18608	PIN – COTTER 3/16 DIA X 1.5 ZP	4	
45	316847	HUB	4	
46	316848	SPINDLE	4	
47	18671	FITTING – LUBE 1/4 - 28 UNF	4	
48	30520	CAP – DUST	4	
49	327751	ARM – WELDT	1	
50	327749	LEVER – WELDT	1	
51	303832	HOOK – WELDT	1	
52	327672	PIVOT – ASSY	1	
53	303380	ASSY – SUPPORT, PIVOT [474]	1	
54	210661	BUSHING – COMPOSITE	4	
55	133992	BUSHING – COMPOSITE	6	
56	303033	PLATE – HANDLE	1	
57	303021	SPRING – EXTENSION	1	
58	247222	SPRING – EXTENSION	1	

472. The hub assembly includes cotter pin (MD #18608), lube fitting (MD #18671), six wheel bolts (MD #18916), dust cap (MD #30520), hub (MD #316847), spindle (MD #316848), wheel bearing kit (MD #316851), slotted nut (MD #316859), and washer (MD #316860).
473. The kit includes bearings (NSS) and seal (NSS).
474. The pivot support assembly includes two composite bushings (MD #210661) and two composite bushings (MD #133992).

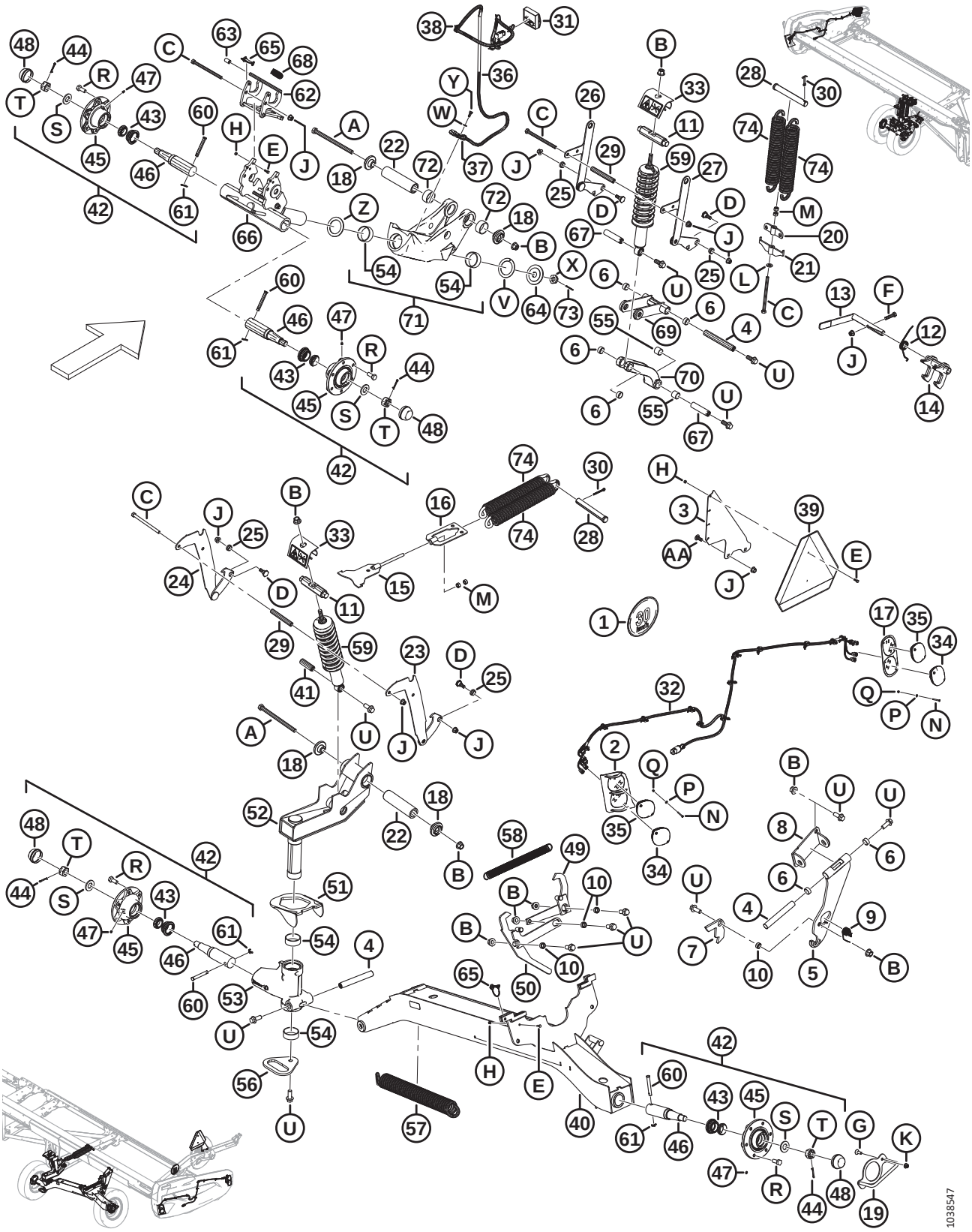
1038547

Ref	Part Number	Description	Qty	Serial Number
59	327798	DAMPENER – HEADER [475]	2	
60	101007	PIN – CLEVIS	4	
61	18648	PIN – COTTER 3/16 DIA X 1.25 ZP	4	
62	327535	LATCH – ASSY [476]	1	
63	327534	GRIP – HANDLE	1	
64	327745	DISC	1	
65	320205	PIN – LYNCH DIA 5/16 IN. X 1.75 IN. LG W/ TETHER	2	
66	327716	SPINDLE – WELDT	1	
67	316293	PIN	2	
68	303898	SPRING – EXTENSION	1	
69	327738	ARM SUPPORT – ASSY [477]	1	
70	303341	CAST SUPPORT – ASSY [478]	1	
71	303283	PIVOT – ASSY [479]	2	
72	327600	BUSHING – COMPOSITE	4	
73	18607	PIN – COTTER 5/32 DIA X 1.5 ZP	1	
74	144724	SPRING – EXTENSION	4	
	316649	DECAL – HEIGHT SETTING, LH	1	
	316639	DECAL – HEIGHT SETTING, RH	1	
	327086	DECAL – ENERGY RELEASE	2	
	165524	REFLECTOR – RED	2	
	302204	DECAL – CA PROPOSITION 65	1	
A	320011	BOLT – HEX HD M16 X 2 X 240-10.9-ZINC		
B	136440	NUT – HEX FLG CTR LK M16 X 2-10-AA1J		
C	252272	BOLT – HEX HD TFL M12 X 1.75 X 180-10.9-ZINC		
D	303251	BOLT – 19 MM SHLDR M12 SPCL		
E	184646	BOLT – HEX HD TFL M6 X 1 X 20-8.8-AA1J		
F	152779	BOLT – HEX HD M12 X 1.75 X 55-8.8-AA1J		
G	136857	SCREW – HEX SOC CSK HD TFL M10 X 1.5 X 30-ZINC		
H	136773	NUT – HEX CTR LOC M6 X 1-8-AA1J		
J	136431	NUT – HEX FLG CTR LOC M12 X 1.75-10		
K	135799	NUT – HEX FLG CTR LOC M10 X 1.5-10		
L	135369	WASHER – HARDENED ASTM F436 1/2		

475. The dampener includes composite bushing (MD #133992).
476. The latch assembly includes latch (NSS) and handle grip (MD #327534).
477. The arm support assembly includes arm support (NSS) and two composite bushings (MD #210690).
478. The support assembly includes support (NSS), two composite bushings (MD #133992), and two composite bushings (MD #210690).
479. The pivot assembly includes pivot (NSS), two composite bushings (MD #210661), and two composite bushings (MD #327600).

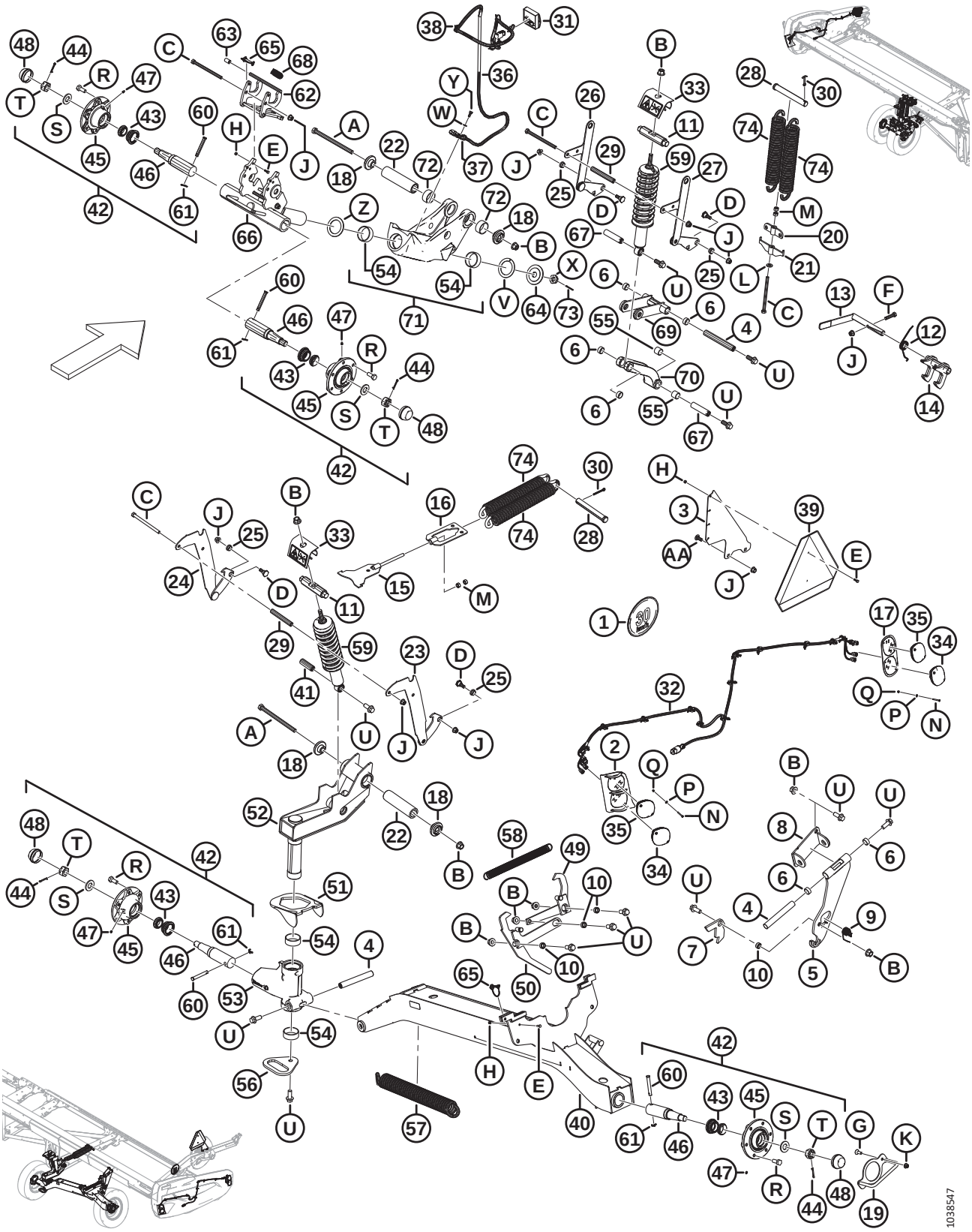
1038547

Ref	Part Number	Description	Qty	Serial Number
M	135156	NUT – HEX M12 X 1.75-10-AA1J		
N	320154	SCREW – PAN HD DIN 7985 M4 X 0.7 X 35-4.8-ZINC BLACK		
P	18798	WASHER – FLAT SAE 7/32 ID X 7/16 IN OD AA1J		
Q	197320	NUT – HEX NYLOC M4 X 0.7-8-AA1J		
R	18916	BOLT – 90° WHEEL 9/16 NF X 1.75 OL - AA1J		
S	316860	WASHER		
T	316859	NUT – SLOTTED		
U	320060	BOLT – HEX FLG HD TFL M16 X 2 X 40-10.9-ZINC		
V	210918	WASHER – THRUST		
W	184708	WASHER – FLAT M8-200HV-AA1J		
X	136446	NUT – HEX SLTD FINE M24 X 1.5-SPCL-22HA-ZINC		
Y	30715	BOLT – HEX HD TFL M8 X 1.25 X 20-8.8-AA1J		
Z	327710	WASHER – THRUST		
AA	152702	BOLT – RHSN M12 X 1.75 X 30-8.8-AA1J		

117 (Option) EasyMove™ – Slow Speed Transport, Wheels, Tires, and Tow Poles

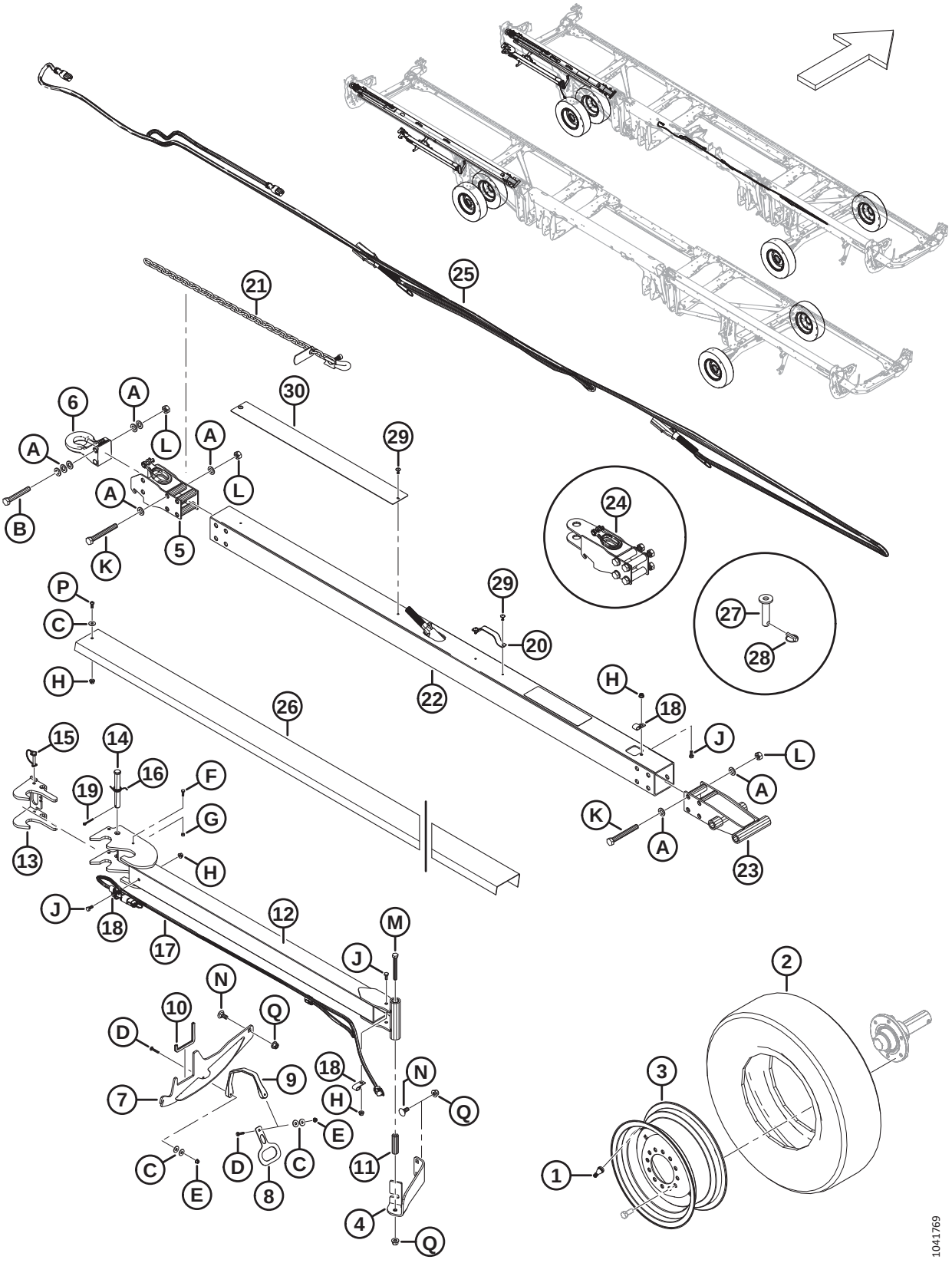

(OPTION) EASYMOVE™ – SLOW SPEED TRANSPORT, WHEELS, TIRES, AND TOW POLES

Ref	Part Number	Description	Qty	Serial Number
	B7398	EASYMOVE SLOW SPEED TRANSPORT – WHEELS AND TIRES [480]		
1	230968	STEM – TIRE VALVE ASSY #TR-416	2	
2	327808	TIRE – ST 225/75 R15 LRF	2	
3	327807	WHEEL – 15 X 6 WHITE [481]	2	
	144531	WHEEL – 15 X 6 LB [482]	A/R	
	327802	DECAL – TIRE PRESSURE, 655 KPA (95 PSI) [483]	2	
	327717	DECAL – TIRE PRESSURE, 552 KPA (80 PSI) [484]	A/R	
	C2173	EASYMOVE SLOW SPEED TRANSPORT – LONG TOW POLE [480]		
	B7392	EASYMOVE™ SLOW SPEED TRANSPORT – LONG TOW POLE [485]		
	B7391	EASYMOVE™ SLOW SPEED TRANSPORT – SHORT TOW POLE [485]		
4	327649	ANGLE – SUPPORT	1	
5	327694	HITCH – BASE	1	
6	113566	HITCH – PINTLE	1	
7	327771	WELDMENT – SUPPORT	1	
8	327304	PLATE – HANDLE	1	
9	193187	STRAP – RUBBER	1	
10	141220	SEAL – EDGE TRIM	1	
11	327294	TUBE	1	
12	327740	HITCH, EXTENSION – WELDT	1	
13	327739	LATCH – WELDT	1	
14	320213	PIN – CLEVIS	1	
15	320205	PIN – LYNCH DIA 5/16 IN. X 1.75 IN. LG W/ TETHER	1	
16	303169	SPRING – TORSION	1	
17	284549	HARNESS – TRANSPORT EXT HITCH	1	
18	39272	CLIP – INSULATED	3	
19	18608	PIN – COTTER 3/16 DIA X 1.5 ZP	1	

480. Kits are available through Whole Goods only.
481. Wheel (MD #327807) is used with tire (MD #327808).
482. Wheel (MD #144531) remains available as a service part for superseded tire (MD #230483). Wheel (MD #144531) is **NOT** included in Wheels and Tires kit B7398.
483. Tire pressure decal (MD #327802) (655 kPa [95 psi]) is used with tire (MD #327808).
484. Tire pressure decal (MD #327717) (552 kPa [80 psi]) remains available as a service part for superseded tire (MD #230483).
485. The Short Tow-Bar kit is used for FD230 and FD235, Long Tow-Bar kit is used for FD240, FD241, FD245, and FD250. Kits are available through Whole Goods only.

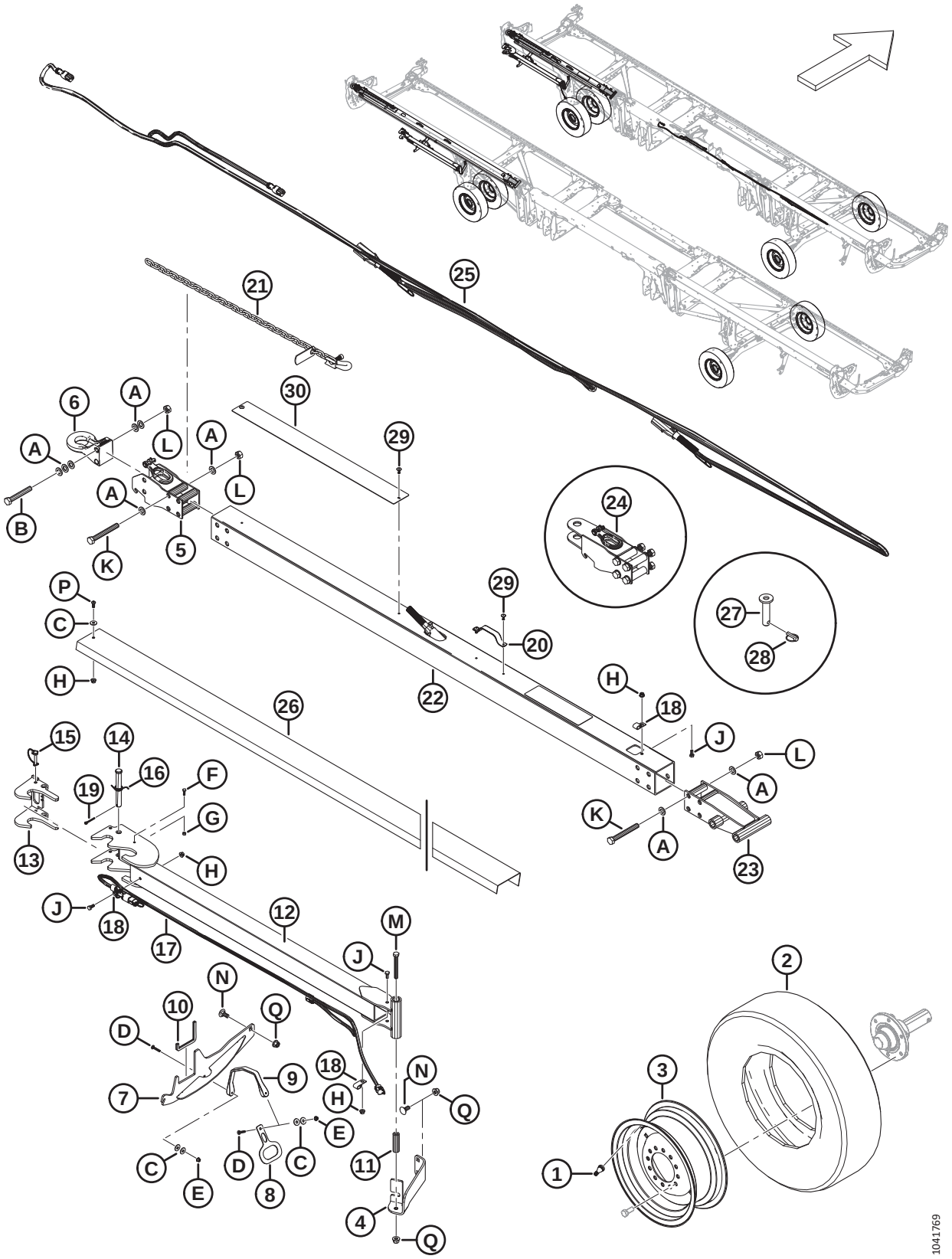
1041769

Ref	Part Number	Description	Qty	Serial Number
20	327563	HANDLE [486]	A/R	
21	327532	CHAIN – SAFETY	1	
22	327696	TUBE – HITCH, LONG[487]	1	
	327695	TUBE – HITCH, SHORT [487]	1	
23	327692	HITCH, END – WELDT	1	
24	327664	ASSY – CLEVIS HITCH	1	
25	284550	HARNESS – TRANSPORT LIGHTS	1	
26	327817	SUPPORT – CHANNEL, LONG [488]	1	
	327680	SUPPORT – CHANNEL, SHORT [488]	1	
27	118239	PIN – HITCH	1	
28	113561	PIN – LYNCH	1	
29	320039	RIVET – POP 4.8 MM X 27.2 MM [489]	A/R	
30	327659	PLATE – WEAR	1	
	327588	DECAL – HITCH DAMAGE HAZARD	1	
A	184717	WASHER – FLAT REG M16-200HV-AA1J		
B	184679	BOLT – HEX HD M16 X 2 X 110-10.9-AA1J		
C	184709	WASHER – FLAT LARGE M8-200HV		
D	184643	BOLT – RHSSN M6 X 1.0 X 35-8.8-AA1J		
E	152668	NUT – HEX FLG CTR LOC M6 X 1-8		
F	184646	BOLT – HEX HD TFL M6 X 1 X 20-8.8-AA1J		
G	136773	NUT – HEX CTR LOC M6 X 1-8-AA1J		
H	135337	NUT – HEX FLG CTR LK M8 X 1.25-8-AA1J		
J	30715	BOLT – HEX HD TFL M8 X 1.25 X 20-8.8-AA1J		
K	320219	BOLT – HEX HD M16 X 2 X 130-12.9-ZINC		
L	320208	NUT – HEX TOP LOCK M16 X 2-12-ZINC		
M	184672	BOLT – HEX HD M12 X 1.75 X 100-10.9-AA1J		
N	184667	BOLT – RHSN M12 X 1.75 X 30-8.8-ZINC		
P	320176	SCREW – HEX SOC BTN HD M8 X 1.25 X 20-10.9-AA1J		
Q	136431	NUT – HEX FLG CTR LOC M12 X 1.75-10		

486. Quantities: long tow pole (B7392) = 2, short tow pole (B7391) = 1.
487. The short tube hitch is used for FD230 and FD235, long tube hitch is used for FD240, FD241, FD245, and FD250. Kits are available through Whole Goods only.
488. The short support channel is used for FD230 and FD235, long support channel is used for FD240, FD241, FD245, and FD250. Kits are available through Whole Goods only.
489. Quantities: long tow pole (B7392) = 6, short tow pole (B7391) = 4.

118 (Option) Flex Linkage Stop Repair

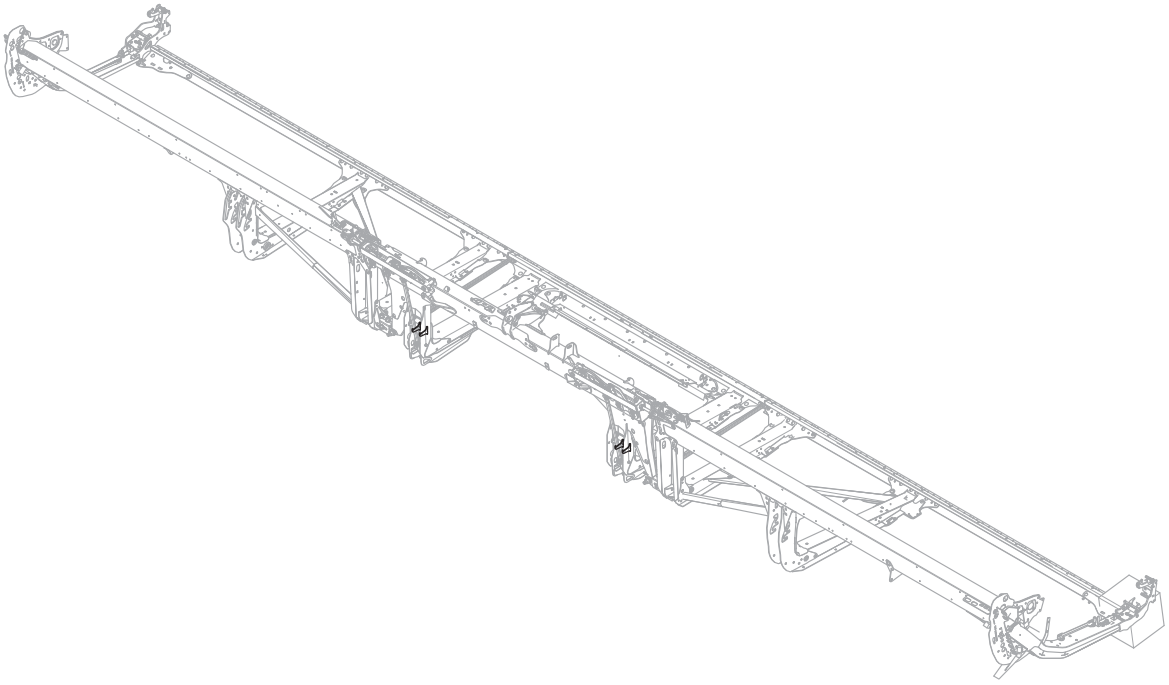

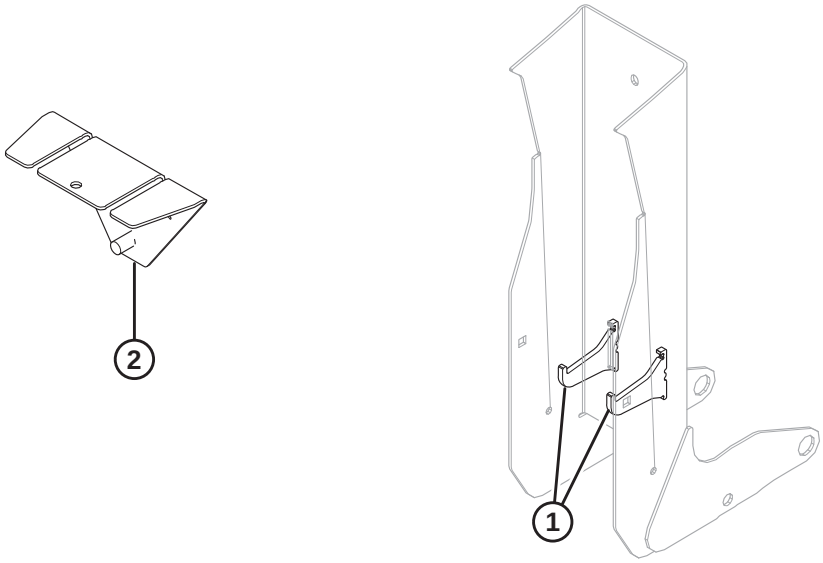

1042461

(OPTION) FLEX LINKAGE STOP REPAIR

IMPORTANT:

By receiving and installing this part, you assume all risk and liability of any nature arising out of the installation of this part. MacDon Industries Ltd. and its affiliates disclaim any and all liability arising from the installation of this part. Weld template (MD #360871) is available to simplify locating the stops. Welding should be performed by an individual certified by an accredited institute in your jurisdiction with the necessary welding qualifications and/or certifications.

Ref	Part Number	Description	Qty	Serial Number
1	360869	KIT – FLEX LINKAGE STOP REPAIR	1	
2	360871	TOOL – WELDT TEMPLATE	1	

119 (Option) Floating Crop Dividers

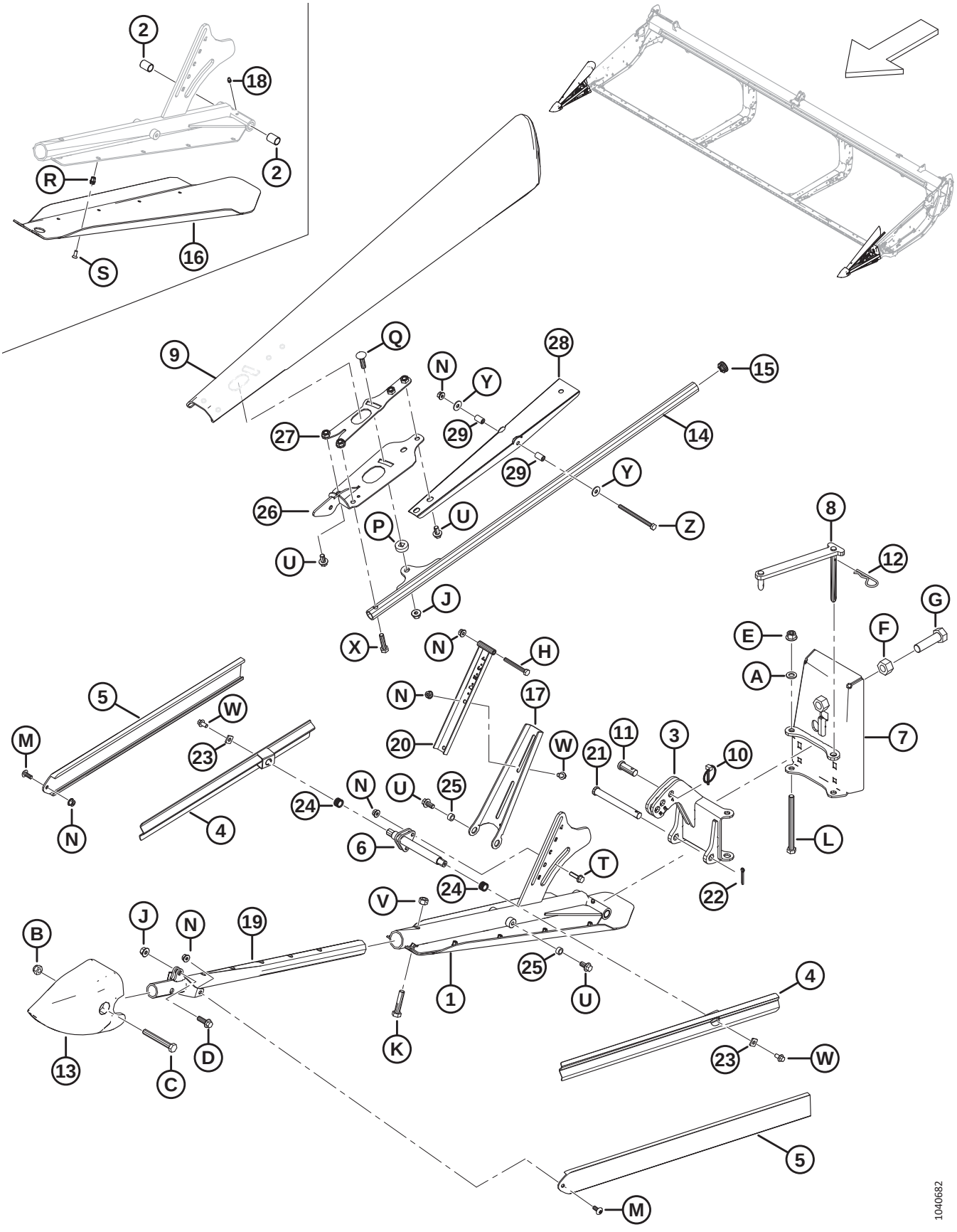

(OPTION) FLOATING CROP DIVIDERS

Ref	Part Number	Description	Qty	Serial Number
	B7346	KIT – FLOATING END DIVIDERS [490]		
1	360072	ASSY – LH SHOE SUPPORT [491]	1	
	360114	ASSY – RH SHOE SUPPORT [492]	1	
2	258391	BUSHING	4	
3	360079	HINGE WELDT – LH	1	
	360119	HINGE WELDT – RH	1	
4	360077	RAIL – DEFLECTOR WELDT	4	
5	360122	DEFLECTOR – EXTRUDED	4	
6	360106	WELDT – SIDE SUPPORT	2	
7	360069	REAR PLATE WELDT – LH	1	
	360134	REAR PLATE WELDT – RH	1	
8	360004	LINK WELDT – LH	1	
	360168	LINK WELDT – RH	1	
9	360723	DEFLECTOR – LH	1	
	360939	KIT – DEFLECTOR, LH [493]	A/R	
	360848	DEFLECTOR – RH	1	
	360940	KIT – DEFLECTOR, RH [494]	A/R	
10	102264	PIN – LYNCH 3/16 X 1 9/16 IN.	2	
11	18619	PIN – CLEVIS	2	
12	13125	PIN – HAIR	2	
13	313461	CONE – DIVIDER	2	
14	360103	TUBE – WELDMENT	2	
15	335301	PLUG – PLASTIC, SNAP-IN	2	
16	340212	SHOE – LH	1	
	340210	SHOE – RH	1	
17	360110	SUPPORT – LH TOP DEFLECTOR	1	
	360120	SUPPORT – RH TOP DEFLECTOR	1	
18	18671	FITTING – LUBE 1/4-28 UNF	2	
19	360076	SUPPORT WELDT – FRONT	2	

490. Kits are available through Whole Goods only.
491. The assembly includes LH support weldment (NSS), LH shoe (MD #340212), grease fitting (MD #18671), two bushings (MD #258391), ten screws (MD #320220), and ten rivnuts (MD #320404).
492. The assembly includes RH support weldment (NSS), RH shoe (MD #340210), grease fitting (MD #18671), two bushings (MD #258391), ten screws (MD #320220), and ten rivnuts (MD #320404).
493. The LH Deflector kit is used to service superseded LH deflector (MD #360095). The kit Includes deflector channel (MD #360850), left retainer (MD #360734), left deflector (MD #360723), left support (MD #360720), two pivot tubes (MD #360847), hardware, and instructions.
494. The RH Deflector kit is used to service superseded RH deflector (MD #360081). The kit includes deflector channel (MD #360850), right retainer (MD #360863), right deflector (MD #360848), right support (MD #360862), two pivot tubes (MD #360847), hardware, and instructions.

(OPTION) FLOATING CROP DIVIDERS

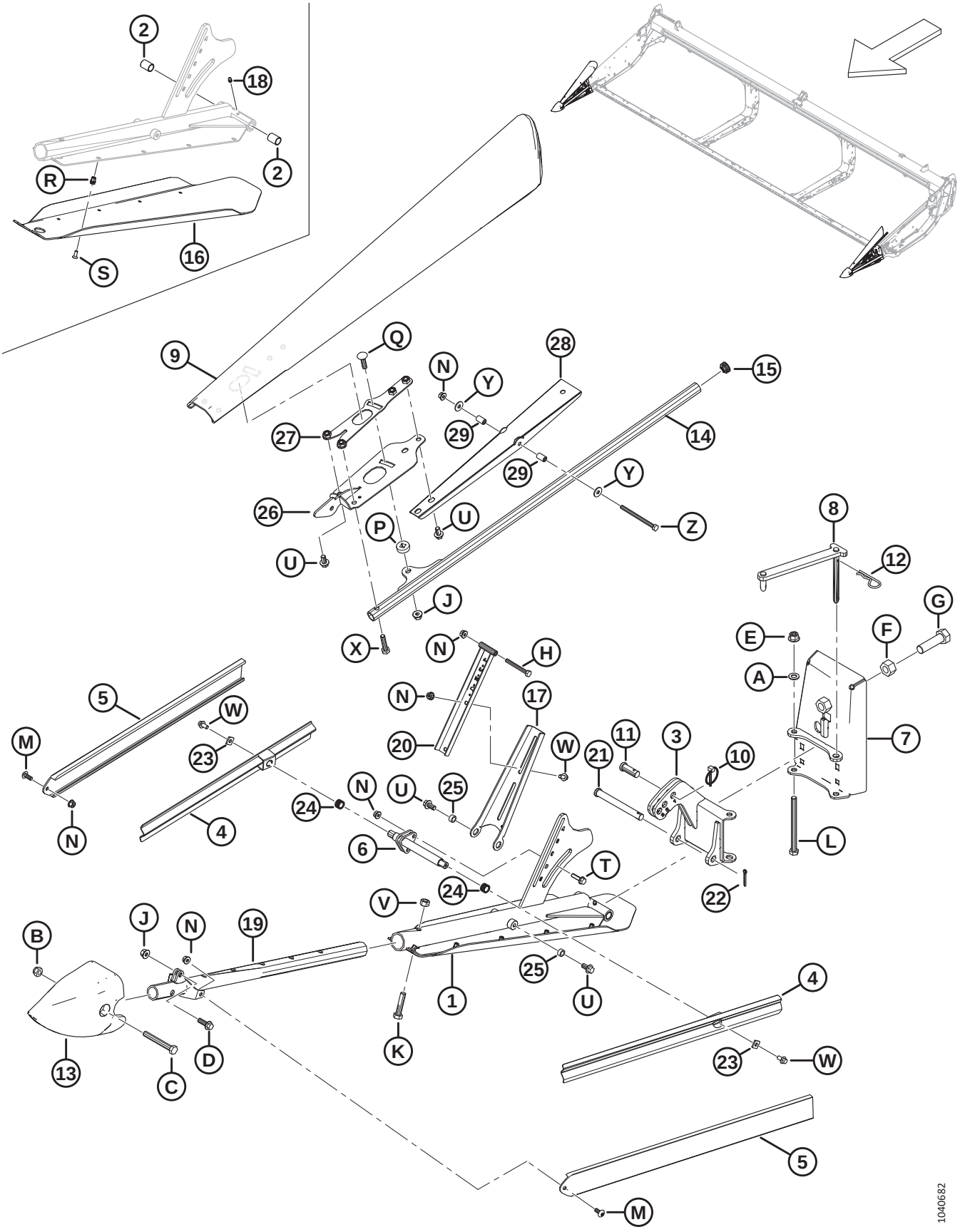

(OPTION) FLOATING CROP DIVIDERS

Ref	Part Number	Description	Qty	Serial Number
20	360108	DEFLECTOR SUPPORT	2	
21	49378	PIN – CLEVIS	2	
22	18648	PIN – COTTER 3/16 DIA X 1.25 ZP	2	
23	233841	SUPPORT – DEFLECTOR	4	
24	26429	SPRING – COMPRESSION	4	
25	19542	SPACER	4	
26	360720	SUPPORT – LH WELDMENT	1	
	360862	SUPPORT – RH WELDMENT	1	
27	360734	RETAINER – LH WELDMENT	1	
	360863	RETAINER – RH WELDMENT	1	
28	360850	CHANNEL – TOP DEFLECTOR	2	
29	360847	TUBE – PIVOT	4	
A	184714	WASHER – FLAT REG M12-300HV		
B	184695	NUT – HEX NYLOC M12 X 1.75-8-AA1J		
C	184673	BOLT – HEX HD M12 X 1.75 X 90-10.9-AA1J		
D	184665	BOLT – HEX FLG HD M10 X 1.5 X 30-10.9-AA1J		
E	136431	NUT – HEX FLG CTR LOC M12 X 1.75-10		
F	136342	NUT – HEX FINE M20 X 1.5 X 10-AA3L		
G	136339	BOLT – HEX HD FINE TFL M20 X 1.5 X 70 X 8.8-ZINC		
H	184656	BOLT – HEX HD M8 X 1.25 X 70-8.8-AA1J		
J	135799	NUT – HEX FLG CTR LOC M10 X 1.5-10		
K	152779	BOLT – HEX HD M12 X 1.75 X 55-8.8-AA1J		
L	135696	BOLT – HEX HD M12 X 1.75 X 150-8.8-AA1J		
M	320190	SCREW – TORX TRUSS HD M8 X 1.25 X 20-SPCL-8.8-ZINC		
N	135337	NUT – HEX FLG CTR LK M8 X 1.25-8-AA1J		
P	360105	WASHER – SPECIAL		
Q	152732	BOLT – RHSN M10 X 1.5 X 40-8.8-AA1J		
R	320404	RIVNUT – M6 X 1.0 HEX 1.0-3.5		
S	320220	SCREW – TORX CSK HD TFL M6 X 1 X 16-SPCL-8.8-ZINC		
T	252655	BOLT – HEX FLG HD TFL M8 X 1.25 X 30-8.8-AA1J		
U	152655	BOLT – HEX FLG HD M10 X 1.5 X 20-8.8-AA1J		
V	136759	NUT – HEX CTR LOC M12 X 1.75-8-AA1J		
W	136485	BOLT – HEX FLG HD TFL M8 X 1.25 X 16-8.8-AA1J		
X	135319	BOLT – HEX HD M10 X 1.5 X 40-8.8-AA1J		
Y	184709	WASHER – FLAT LARGE M8-200HV		
Z	135523	BOLT – HEX HD M8 X 1.25 X 110-8.8-AA1J		

120 (Option) Four-Point Guard Kits, Single Knife

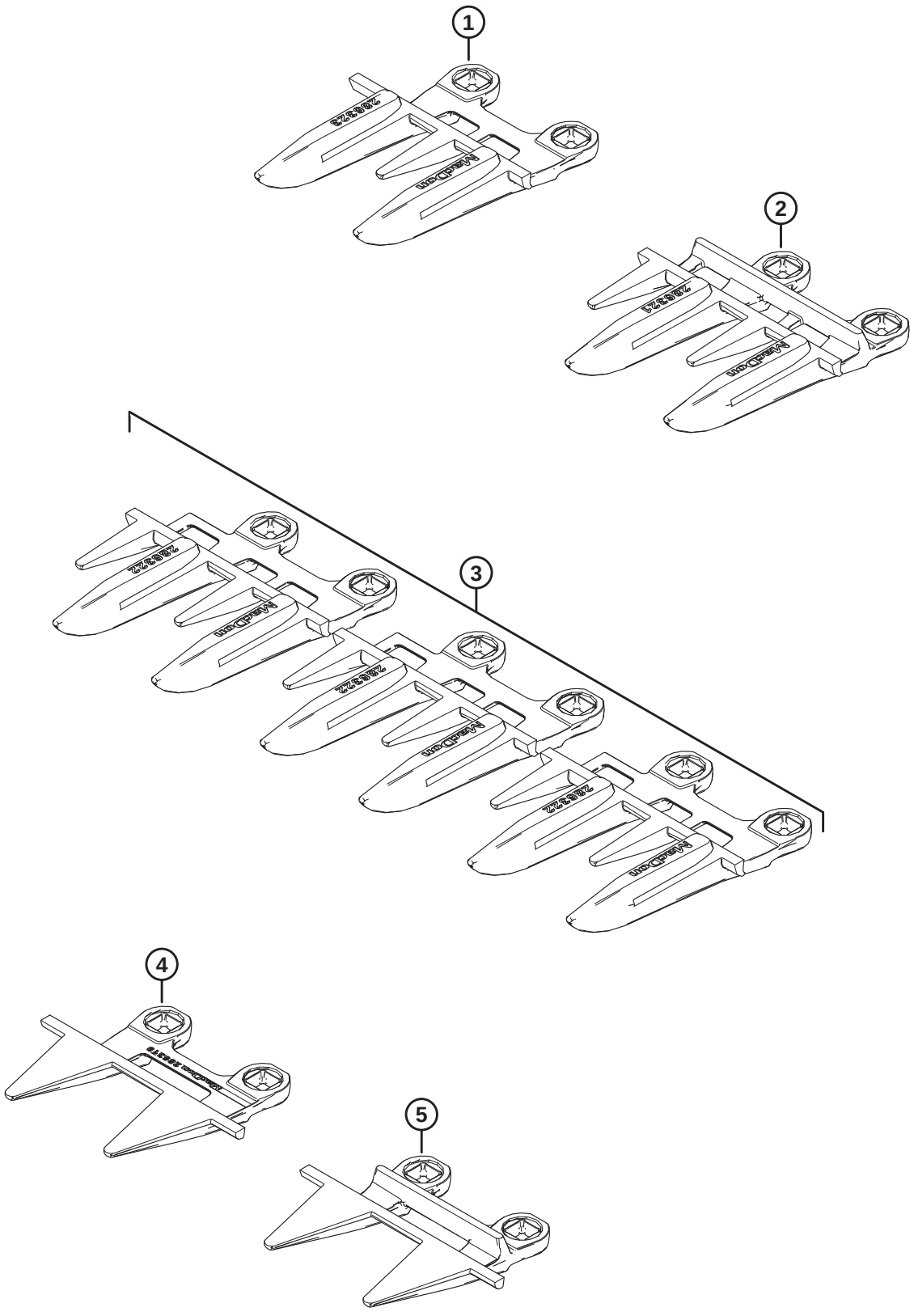

1039619

(OPTION) FOUR-POINT GUARD KITS, SINGLE KNIFE

Ref	Part Number	Description	Qty	Serial Number
	286690	KIT – 4 POINT GUARDS 25 FT SK		
	286691	KIT – 4 POINT GUARDS 30 FT SK		
	286692	KIT – 4 POINT GUARDS 35 FT SK		
	286693	KIT – 4 POINT GUARDS 40 FT SK		
1	286323	KNIFE GUARD – 4-POINT SPECIAL [495]	1	
2	286321	KNIFE GUARD – 4-POINT [496]		
3	286322	KNIFE GUARD – 4-POINT END [497]	3	
4	286319	KNIFE GUARD – PLUGFREE END [497]	1	
5	286318	KNIFE GUARD – PLUGFREE [495]	1	

495. Used at the right end of the header.
496. Quantities: FD225 = 44, FD230 = 54, FD235 = 64, FD240 = 74.
497. Used at the drive end of the header.

121 (Option) Four-Point Guard Kits, Double Knife

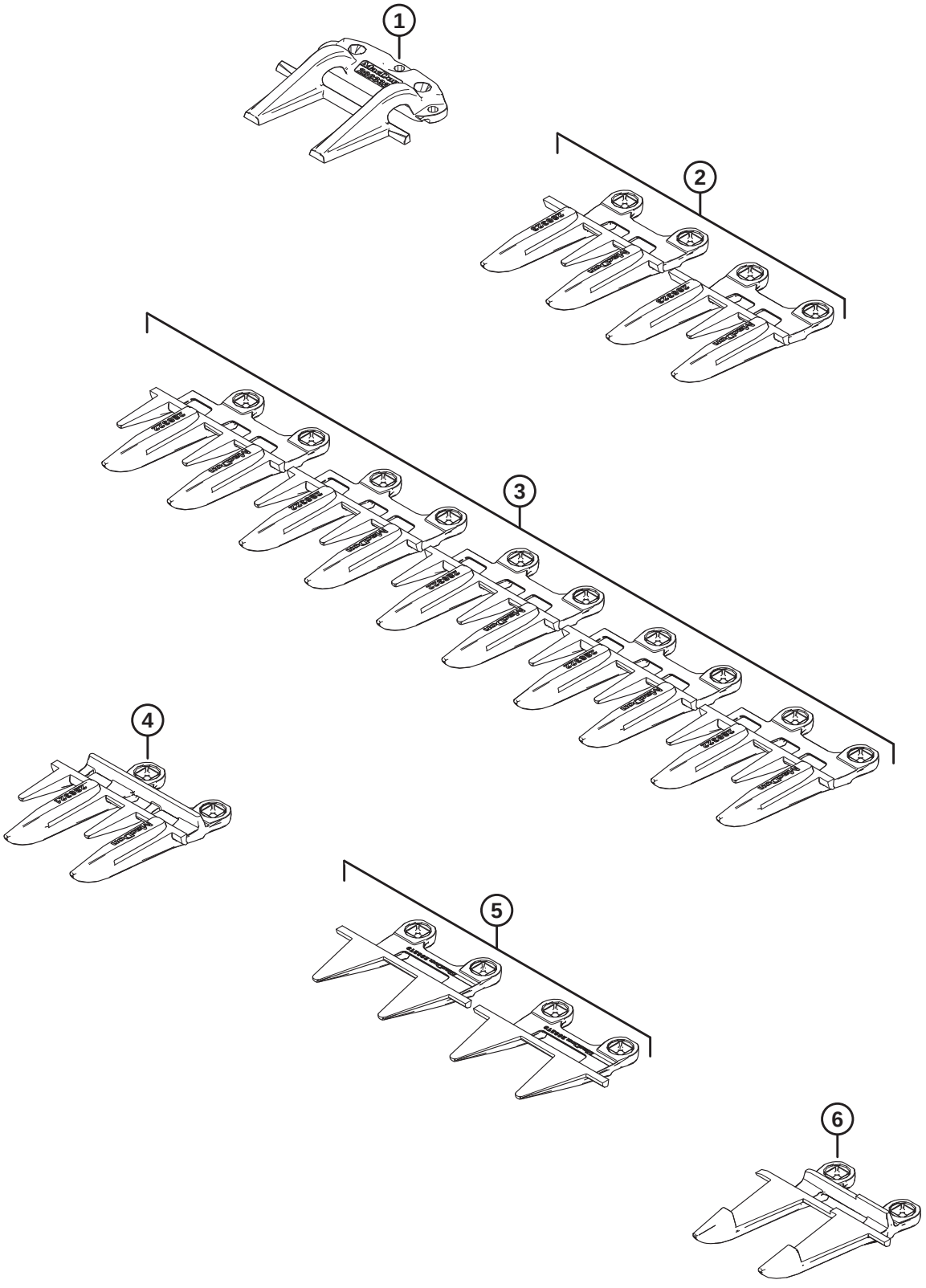

1039618

(OPTION) FOUR-POINT GUARD KITS, DOUBLE KNIFE

Ref	Part Number	Description	Qty	Serial Number
	286683	KIT – 4 POINT GUARDS 25 FT DK		
	286684	KIT – 4 POINT GUARDS 30 FT DK		
	286685	KIT – 4 POINT GUARDS 35 FT DK		
	286686	KIT – 4 POINT GUARDS 40 FT DK		
	286687	KIT – 4 POINT GUARDS 41 FT DK		
	286688	KIT – 4 POINT GUARDS 45 FT DK		
	286689	KIT – 4 POINT GUARDS 50 FT DK		
1	286332	HOLD-DOWN – POINTED CENTER [498]	1	
2	286323	KNIFE GUARD – 4-POINT SPECIAL [499]	2	
3	286322	KNIFE GUARD – 4-POINT END [500]	5	
4	286321	KNIFE GUARD – 4-POINT [501]		
5	286319	KNIFE GUARD – PLUGFREE END [502]	2	
6	286317	KNIFE GUARD – POINTED CENTER [498]	1	

498. Used near the center of the header.
499. One 4-point special knife guard is used at the right end of the header, and to the left of the pointed center knife guard and pointed center hold-down.
500. Three 4-point end knife guards are used at the drive end of the header, and two 4-point end knife guards are used at the right end of the header.
501. Quantities: FD225 = 40, FD230 = 50, FD235 = 60, FD240 = 70, FD241 = 72, FD245 = 80, FD250 = 90.
502. One PlugFree™ end knife guard is used at each end of the header.

122 (Option) High Wear Skid Shoes

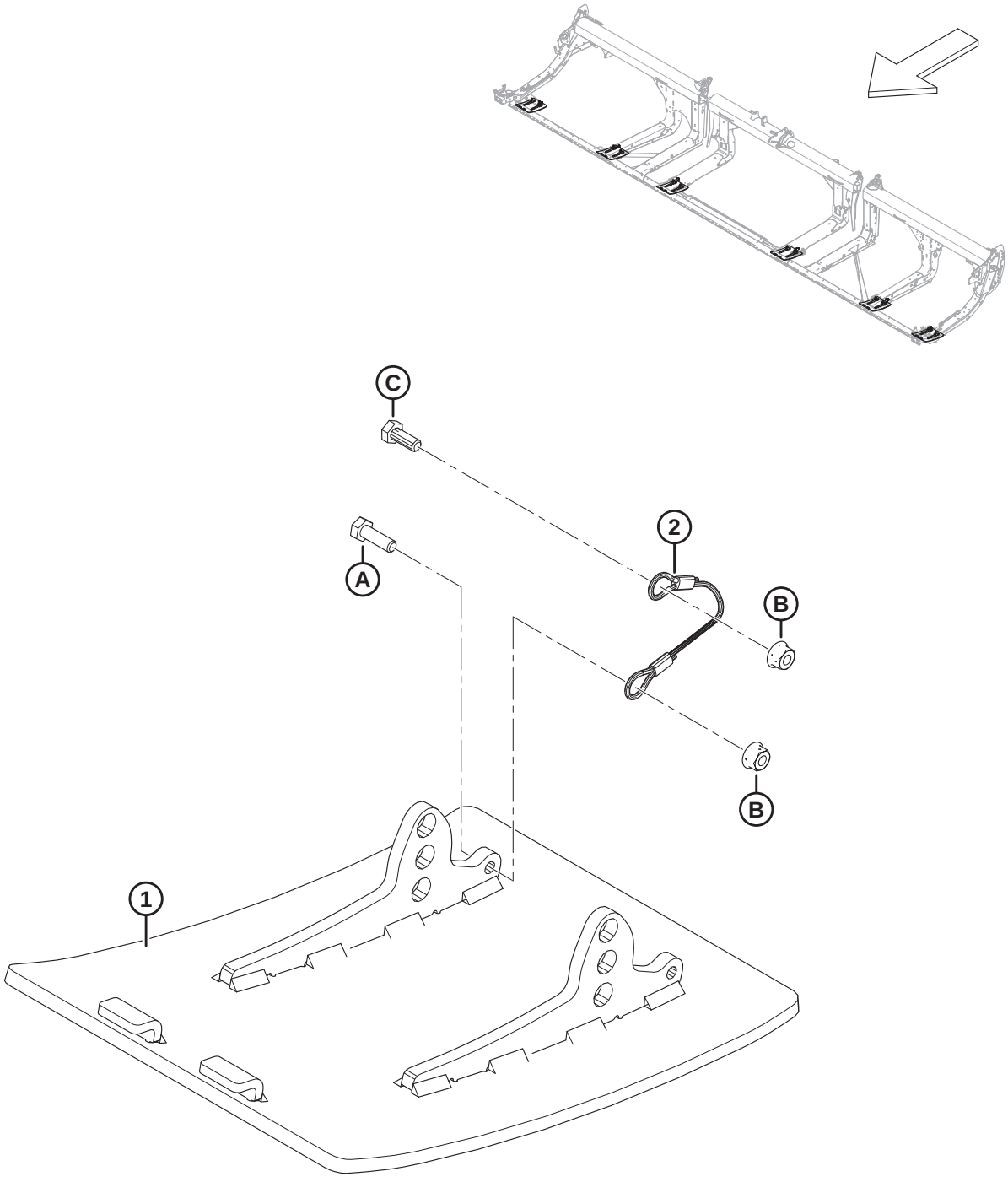

1034768

(OPTION) HIGH WEAR SKID SHOES

Ref	Part Number	Description	Qty	Serial Number
	B6801	KIT – HIGH WEAR, ABRASION RESISTANT STEEL SKID SHOES [503]		
1	313374	WELDT – HIGH WEAR SHOE	2	
2	312673	CABLE – STOP	2	
A	184652	BOLT – HEX HD TFL M8 X 1.25 X 25-8.8-AA1J		
B	135337	NUT – HEX FLG CTR LK M8 X 1.25-8-AA1J		
C	30715	BOLT – HEX HD TFL		

503. The kit includes two high wear steel skid shoes, two cable stops, hardware, and instructions. Two kits are required for FD225 headers. Three kits are required for FD230 and larger headers. Kits are available through Whole Goods only.

123 (Option) Lodged Crop Reel Fingers

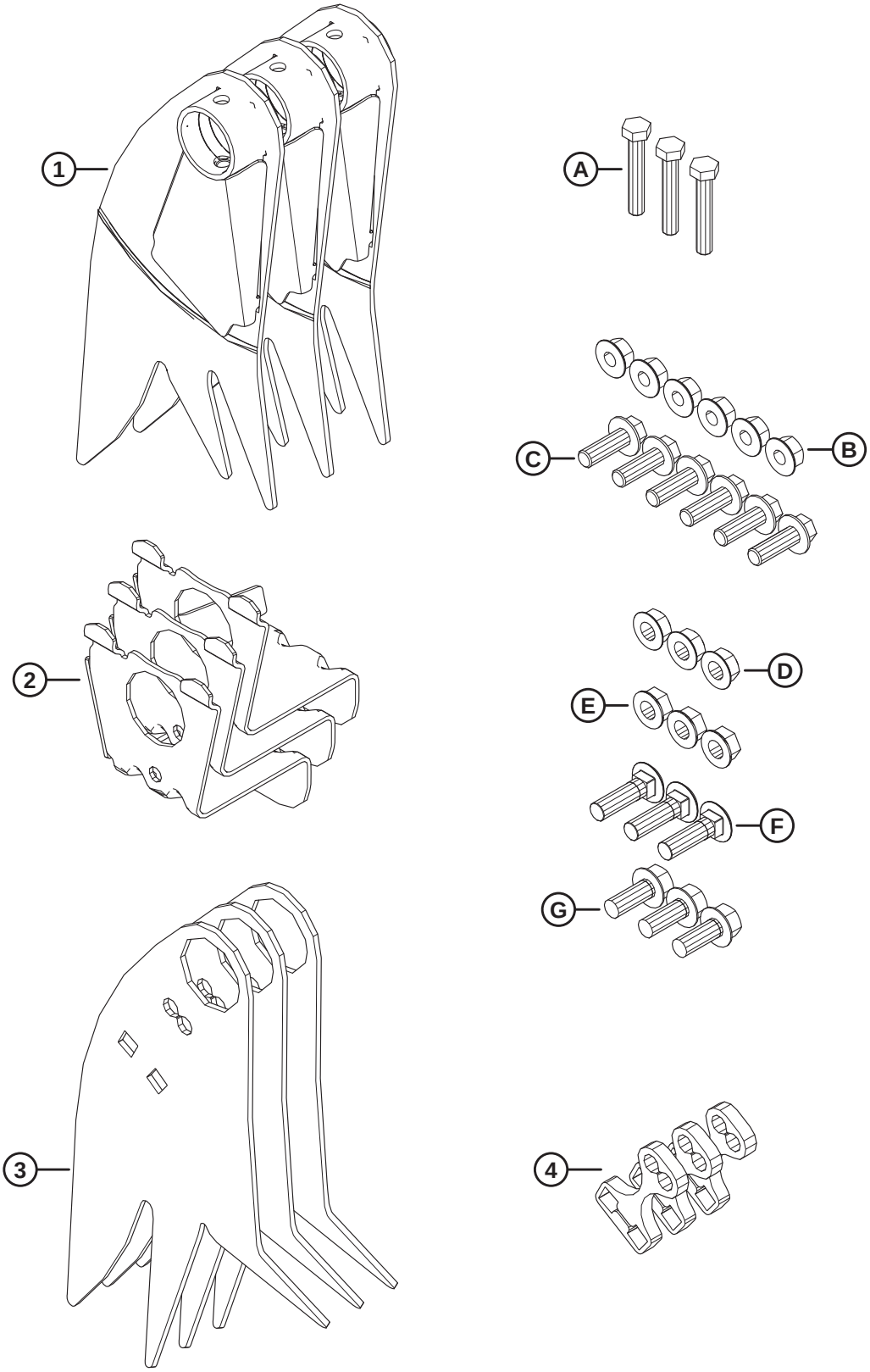

1041518

(OPTION) LODGED CROP REEL FINGERS

Ref	Part Number	Description	Qty	Serial Number
	B7230	KIT – LODGED CROP FINGER [504]		
1	360045	WELDT – TAIL END RIGID FINGER	3	
2	340091	SUPPORT – WELDT	3	
3	360044	FINGER – RIGID	3	
4	273615	SHIM	3	
A	184664	BOLT – HEX HD M10 X 1.5 X 60-8.8-AA1J		
B	184697	NUT – HEX SER FLG M12 X 1.75-8-AA1J		
C	152731	BOLT – HEX FLG HD TFL M12 X 1.75 X 35-10.9-AA1J		
D	21383	NUT – FLG SER FACE 1/2-13 UNC GR5 AA1J		
E	50186	NUT – FLG LK DT 1/2-13 UNC GR5 AA1J		
F	30515	BOLT – RHSN 1/2-13 X 1.75-GR5-AA1J		
G	30368	BOLT – HH FLG SER 1/2-13 X 1.25-GR5-AA1J		

504. The Lodged Crop Reel Fingers kit includes three fingers for the cam end of the reel, three fingers for the tail end of the reel, three supports, three shims, all listed hardware, and instructions. Lodged crop reel fingers are **NOT** compatible with the Wide Draper Deflector kit. Kits are available through Whole Goods only.

124 (Option) Reel Tine Tube Conversion Kits – Double Reel, 5 Bat to 6 Bat

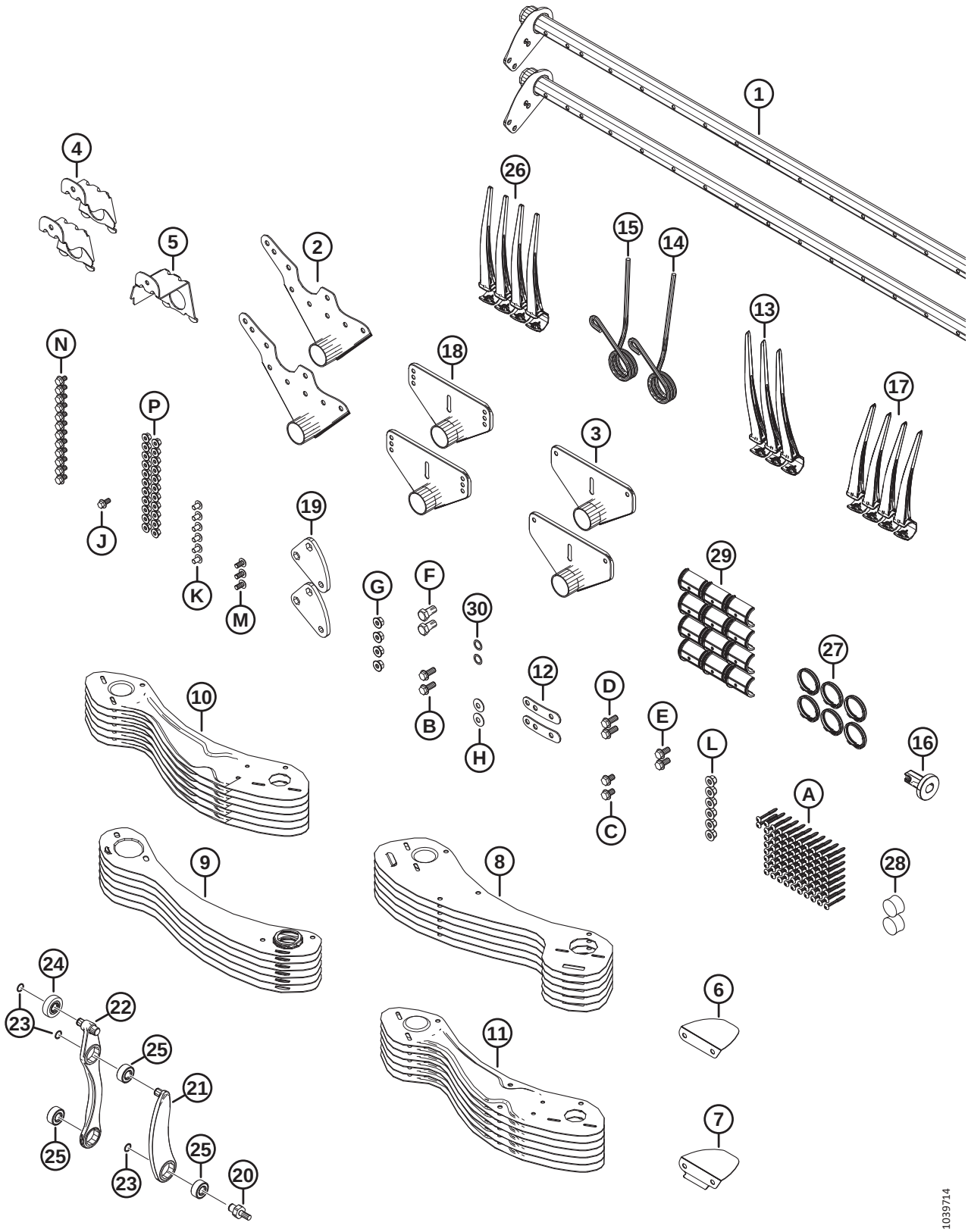

(OPTION) REEL TINE TUBE CONVERSION KITS – DOUBLE REEL, 5 BAT TO 6 BAT

Ref	Part Number	Description	Qty	Serial Number
	B7357	KIT – 30FT DR 5B TO 6B CONV. [505]		
	B7358	KIT – 35FT DR 5B TO 6B CONV. [505]		
	B7359	KIT – 41FT DR 5B TO 6B CONV. [505]		
1	311365	TINE TUBE – 30FT DR WIDE	2	
	311210	TINE TUBE – 35FT DR WIDE	2	
	311306	TINE TUBE – 41FT DR WIDE	2	
2	335924	ARM WELDT – CAM END	2	
3	311347	ARM WELDT – TAIL END	2	
4	311964	SUPPORT – WELDT CAM END	2	
5	311965	SUPPORT – WELDT TAIL END [506]	1	
6	311906	DEFLECTOR – CAM INBOARD	1	
7	311729	DEFLECTOR – CAM OUTBOARD	1	
8	273813	SHIELD – 6 BAT LH REEL CAM END	6	
9	311822	SHIELD – 6 BAT RH REEL TAIL END	6	
10	311753	SHIELD – OUTBOARD LH 6 BAT	6	
11	311752	SHIELD – OUTBOARD RH 6 BAT	6	
12	311672	STRAP	2	
13	360540	FINGER – PLASTIC, LH ANGLED, 45 MM (PKG OF 10) [507]		
14	311327	FINGER – CAM END BENT	1	
15	311325	FINGER – CAM END OUTBOARD	1	
16	273968	BUSHING – ENDSHIELD	1	
17	311523	FINGER – PLASTIC, RH ANGLED, 52 MM (PKG OF 10)	4	
18	273523	ARM WELDT – MID SPAN [508]		
19	228319	ARM – CRANK MACHINING	2	
20	340146	STUD	2	
21	311615	ARM – ASSEMBLY [509]	2	
22	311617	ARM – TINE CONTROL ASSY [510]	2	
23	273536	RING – RETAINING	6	
24	273524	BEARING – CAM FOLLOWER	2	
25	273347	BEARING	6	
26	174849	FINGER – PLASTIC HEAVY DUTY (PKG OF 10) [511]		

505. Kits are available through Whole Goods only.
506. FD230 only.
507. Quantities: FD230 = 3, FD235 = 2, FD241 = 2.
508. Quantities: FD230 = 2, FD235 = 4, FD241 = 4.
509. The arm assembly includes one retaining ring (MD #273536) and one bearing (MD #273347).
510. The tine control arm assembly includes two retaining rings (MD #273536), one cam follower bearing (MD #273524), and two bearings (MD #273347).
511. Quantities: FD230 = 76, FD235 = 89, FD241 = 106.

(OPTION) REEL TINE TUBE CONVERSION KITS – DOUBLE REEL, 5 BAT TO 6 BAT

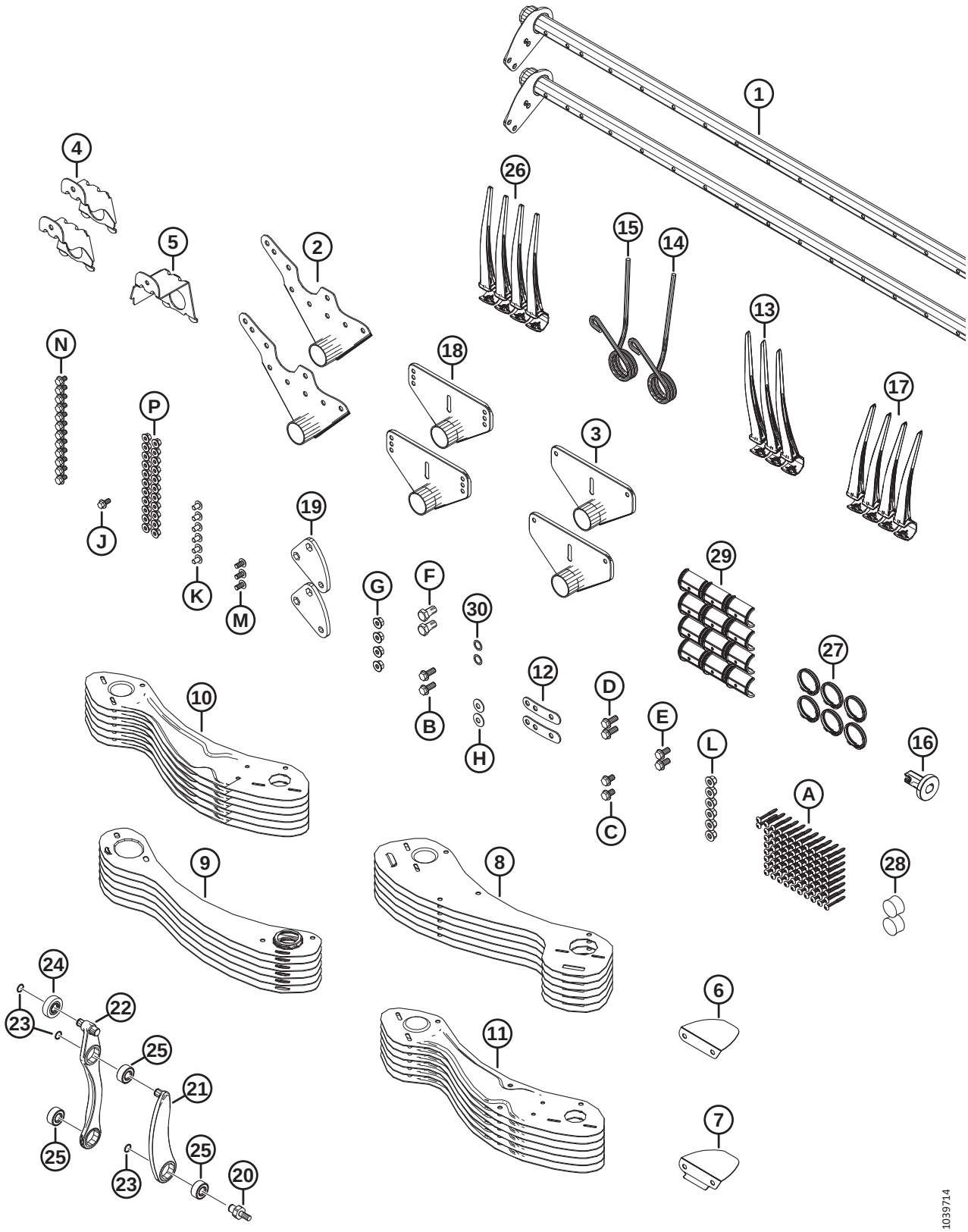

(OPTION) REEL TINE TUBE CONVERSION KITS – DOUBLE REEL, 5 BAT TO 6 BAT

Ref	Part Number	Description	Qty	Serial Number
27	220941	CLAMP – TINE TUBE BUSHING-CENTER RIB (BOX OF 5) [512]		
28	137980	PLUG – TINE TUBE [513]		
29	220939	TINE TUBE BUSHING (BOX OF 25) [514]		
30	137529	SHIM – CRANK BEARING	2	
A	252687	SCREW – 48° PLASTITE TWIN HELIX		
B	320192	BOLT – HEX FLG HD M12 X 1.75 X 30-SPCL-8.8-ZINC		
C	320187	BOLT – HEX FLG HD M12 X 1.75 X 20-SPCL-8.8-ZINC		
D	320180	BOLT – HEX FLG HD M12 X 1.75 X 30-SPCL-8.8-ZINC		
E	320175	BOLT – HEX FLG HD TFLM12 X 1.75 X 25-SPCL-8.8-ZINC		
F	228316	BOLT – HEX HD M16 X 1.5 X 30-SPCL-8.8-ZINC		
G	184697	NUT – HEX SER FLG M12 X 1.75-8-AA1J		
H	184597	WASHER – CON SPRING M12-ZINC		
J	152655	BOLT – HEX FLG HD M10 X 1.5 X 20-8.8-AA1J		
K	136640	SCREW – TORX TRUSS HD M10 X 1.5 X 16 X SPCL-8.8-AA1J		
L	136431	NUT – HEX FLG CTR LOC M12 X 1.75-10		
M	136395	SCREW – TORX TRUSS HD M10 X 1.5 X 20 X SPCL-8.8-A3L		
N	136151	BOLT – HEX FLG HD TFL M10 X 1.5 X 16-8.8-AA1J		
P	135799	NUT – HEX FLG CTR LOC M10 X 1.5-10		

512. Quantities: FD230 = 6, FD235 = 8, FD241 = 8
513. Quantities: FD230 = 2, FD235 = 3, FD241 = 3.
514. Quantities: FD230 = 12, FD235 = 16, FD241 = 16.

125 (Option) Reel Tine Tube Conversion Kits – Double Reel, 6 Bat to 9 Bat

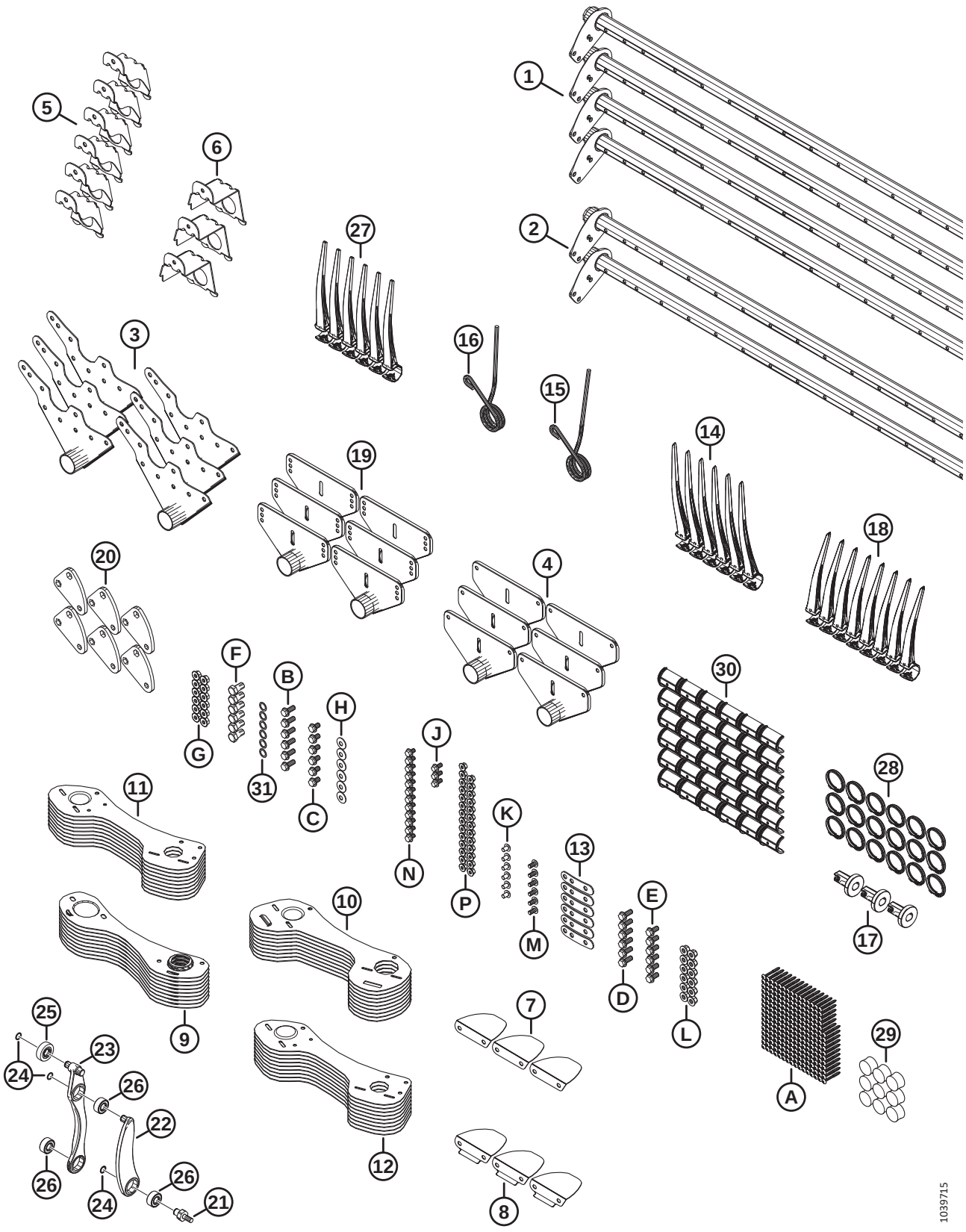

(OPTION) REEL TINE TUBE CONVERSION KITS – DOUBLE REEL, 6 BAT TO 9 BAT

Ref	Part Number	Description	Qty	Serial Number
	B7362	KIT – 30FT DR 6B TO 9B CONV. [515]		
1	311368	TINE TUBE – 30FT DR NARROW	4	
2	311365	TINE TUBE – 30FT DR WIDE	2	
3	335924	ARM WELDT – CAM END	6	
4	311347	ARM WELDT – TAIL END	6	
5	311964	SUPPORT – WELDT CAM END	6	
6	311965	SUPPORT – WELDT TAIL END	3	
7	311906	DEFLECTOR – CAM INBOARD	3	
8	311729	DEFLECTOR – CAM OUTBOARD	3	
9	311870	SHIELD – 9 BAT RH REEL, TAIL END	9	
10	311868	SHIELD – 9 BAT LH REEL, CAM END	9	
11	311864	SHIELD – OUTBOARD LH 9 BAT	9	
12	311863	SHIELD – OUTBOARD RH 9 BAT	9	
13	311672	STRAP	6	
14	360540	FINGER – PLASTIC, LH ANGLED, 45 MM (PKG OF 10)	6	
15	311327	FINGER – CAM END BENT	3	
16	311325	FINGER – CAM END OUTBOARD	3	
17	273968	BUSHING – ENDSHIELD	3	
18	311523	FINGER – PLASTIC, RH ANGLED, 52 MM (PKG OF 10)	8	
19	273523	ARM WELDT – MID SPAN	6	
20	228319	ARM – CRANK MACHINING	6	
21	340146	STUD	6	
22	311615	ARM – ASSEMBLY [516]	6	
23	311617	ARM – TINE CONTROL ASSY [517]	6	
24	273536	RING – RETAINING	18	
25	273524	BEARING – CAM FOLLOWER	6	
26	273347	BEARING	18	
27	174849	FINGER – PLASTIC HEAVY DUTY (PKG OF 10)	237	
28	220941	CLAMP – TINE TUBE BUSHING, CENTER RIB (BOX OF 5)	18	
29	137980	PLUG – TINE TUBE	9	
30	220939	TINE TUBE BUSHING (BOX OF 25)	36	
31	137529	SHIM – CRANK BEARING	6	
A	252687	SCREW – 48° PLASTITE TWIN HELIX		

515. Kits are available through Whole Goods only.
516. The arm assembly includes one retaining ring (MD #273536) and one bearing (MD #273347).
517. The tine control arm assembly includes two retaining rings (MD #273536), one cam follower bearing (MD #273524), and two bearings (MD #273347).

(OPTION) REEL TINE TUBE CONVERSION KITS – DOUBLE REEL, 6 BAT TO 9 BAT

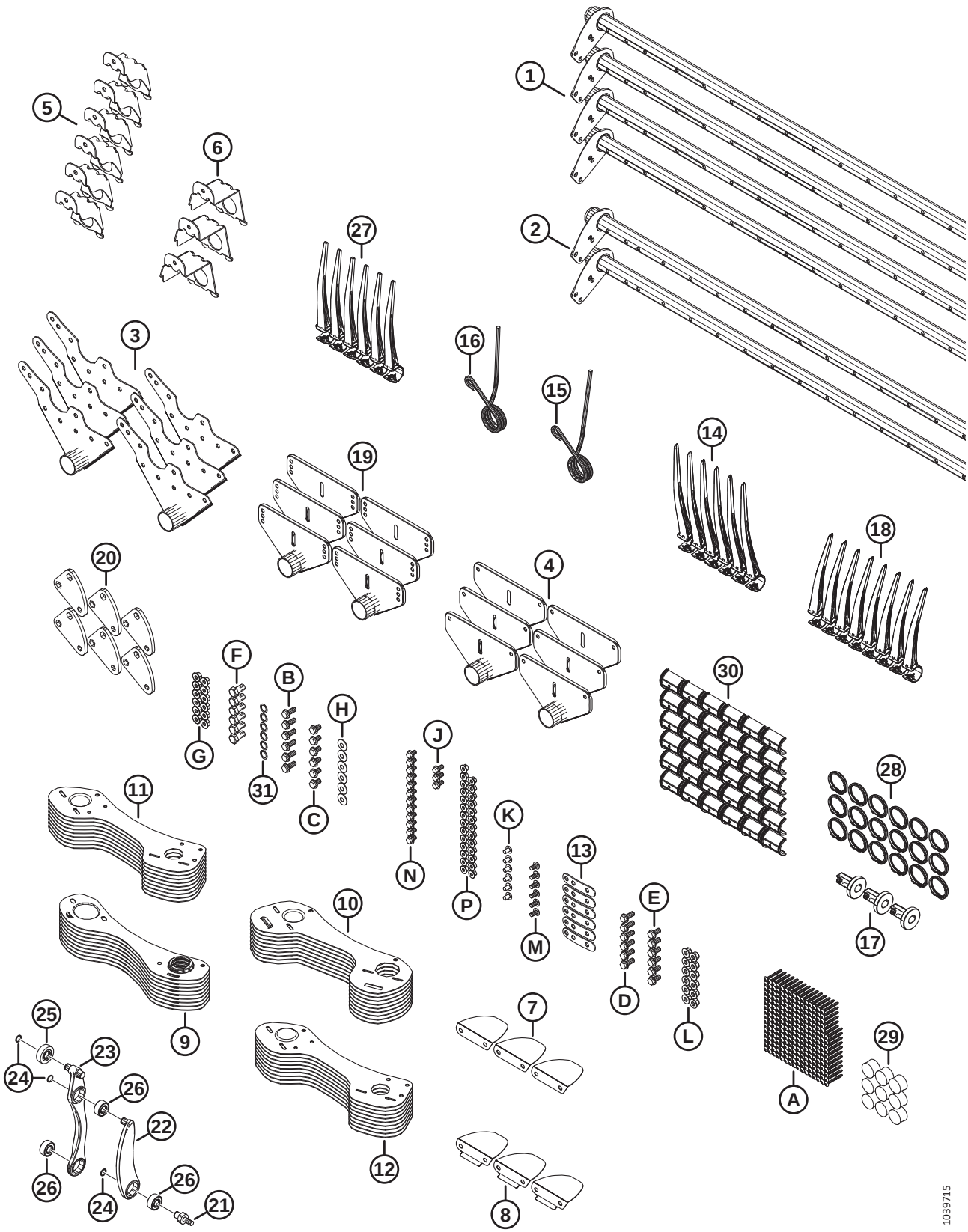

(OPTION) REEL TINE TUBE CONVERSION KITS – DOUBLE REEL, 6 BAT TO 9 BAT

Ref	Part Number	Description	Qty	Serial Number
B	320192	BOLT – HEX FLG HD M12 X 1.75 X 30-SPCL-8.8-ZINC		
C	320187	BOLT – HEX FLG HD M12 X 1.75 X 20-SPCL-8.8-ZINC		
D	320180	BOLT – HEX FLG HD M12 X 1.75 X 30-SPCL-8.8-ZINC		
E	320175	BOLT – HEX FLG HD TFL M12 X 1.75 X 25-SPCL-8.8-ZINC		
F	228316	BOLT – HEX HD M16 X 1.5 X 30-SPCL-8.8-ZINC		
G	184697	NUT – HEX SER FLG M12 X 1.75-8-AA1J		
H	184597	WASHER – CON SPRING M12-ZINC		
J	152655	BOLT – HEX FLG HD M10 X 1.5 X 20-8.8-AA1J		
K	136640	SCREW – TORX TRUSS HD M10 X 1.5 X 16 X SPCL-8.8-AA1J		
L	136431	NUT – HEX FLG CTR LOC M12 X 1.75-10		
M	136395	SCREW – TORX TRUSS HD M10 X 1.5 X 20 X SPCL-8.8-A3L		
N	136151	BOLT – HEX FLG HD TFL M10 X 1.5 X 16-8.8-AA1J		
P	135799	NUT – HEX FLG CTR LOC M10 X 1.5-10		

126 (Option) Reel – Two Speed

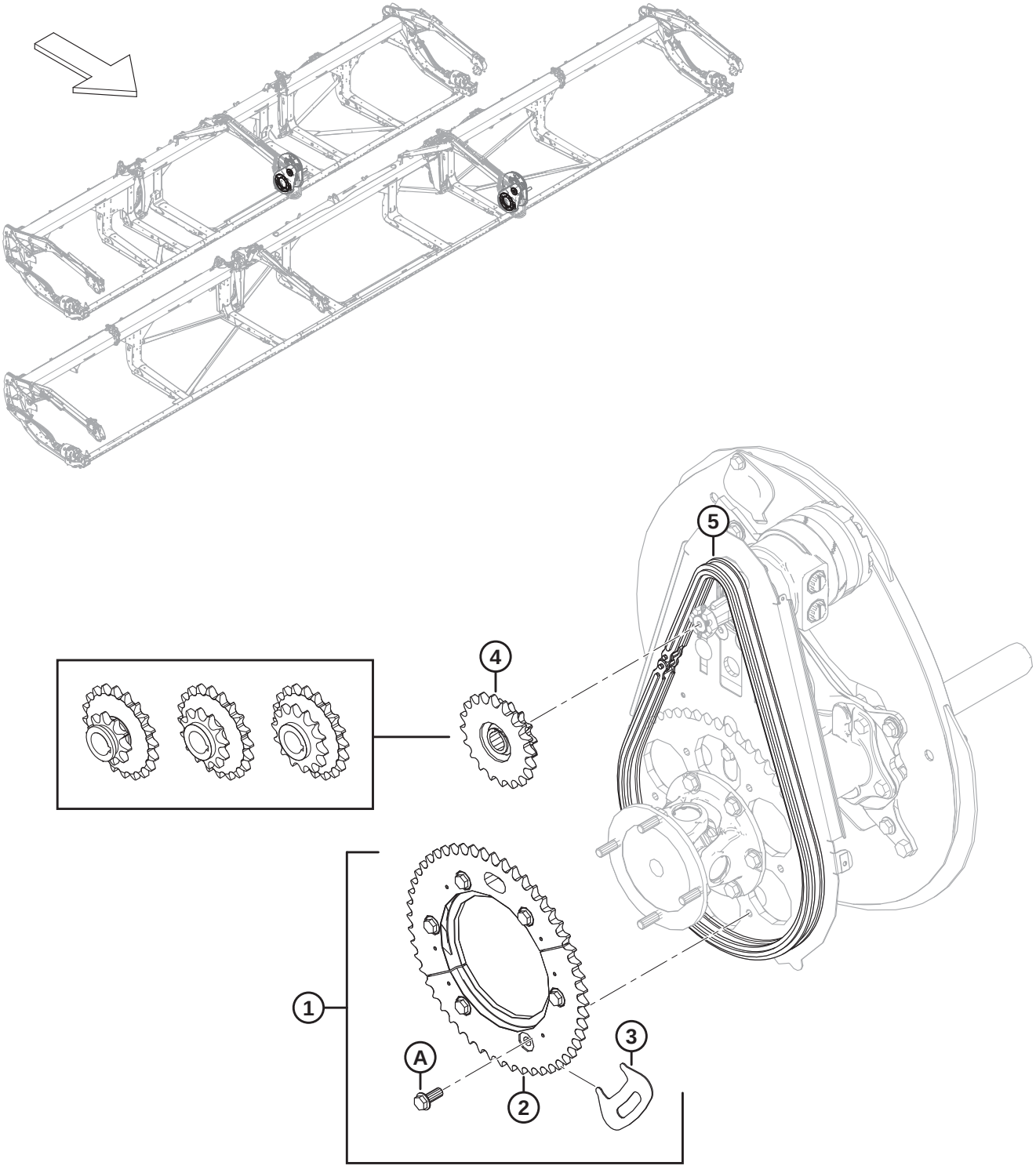

1032643

(OPTION) REEL – TWO SPEED

Ref	Part Number	Description	Qty	Serial Number
1	311882	KIT – 2 SPEED [518]	1	
2	273689	SPROCKET – MACHINED 52 T	1	
3	273594	TOOL – SPROCKET	1	
4	273453	SPROCKET – DUAL 14-20 (NEW HOLLAND) [519]	1	
5	273907	CHAIN – RC 60 ENDLESS 76 LINKS [520]	OPT	
	273963	CHAIN – RC C/W CONNECTOR 76 LINKS [520]	OPT	
A	320192	BOLT – HEX FLG HD M12 X 1.75 X 30-SPCL-8.8-AA1J		

518. The kit includes 52-tooth machined sprocket (MD #273689), sprocket tool (MD #273594), six bolts (MD #320180), and instructions.
519. New Holland, 3000 psi reel drive circuit pressure.
520. The chain is **NOT** included in kit (MD #311882). A new chain is recommended if the kit is being installed on a unit with hours and it is not a new header. A worn chain will affect the register of the sprocket halves to one another.

127 (Option) Rice Divider Rods

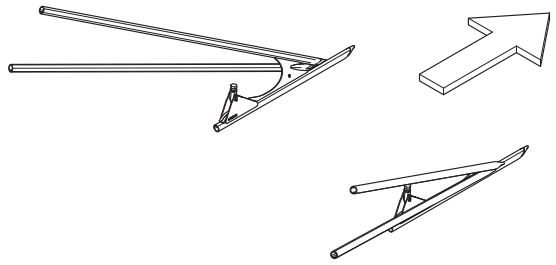

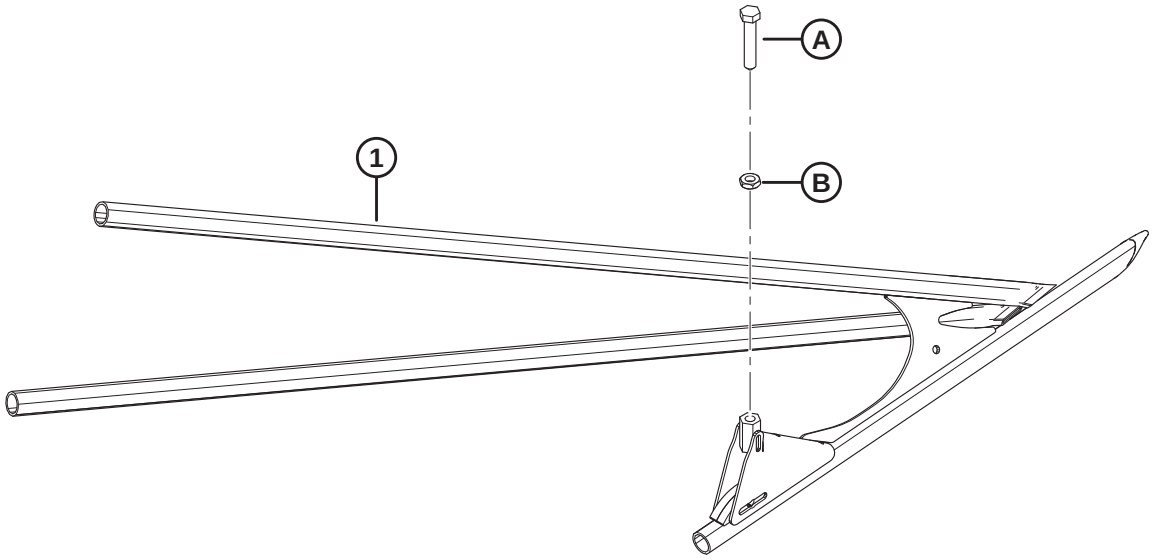

1034744

(OPTION) RICE DIVIDER RODS

Ref	Part Number	Description	Qty	Serial Number
	B7238	RICE DIVIDER RODS [521]		
1	340095	DIVIDER – RICE LH TUBE WELDT	1	
	340096	DIVIDER – RICE RH TUBE WELDT	1	
A	232762	SET SCREW – MACHINED		
B	184696	NUT – HEX THIN M12 X 1.75-05-AA1J		

521. Kits are available through Whole Goods only.

128 (Option) Rock Retarder Kit

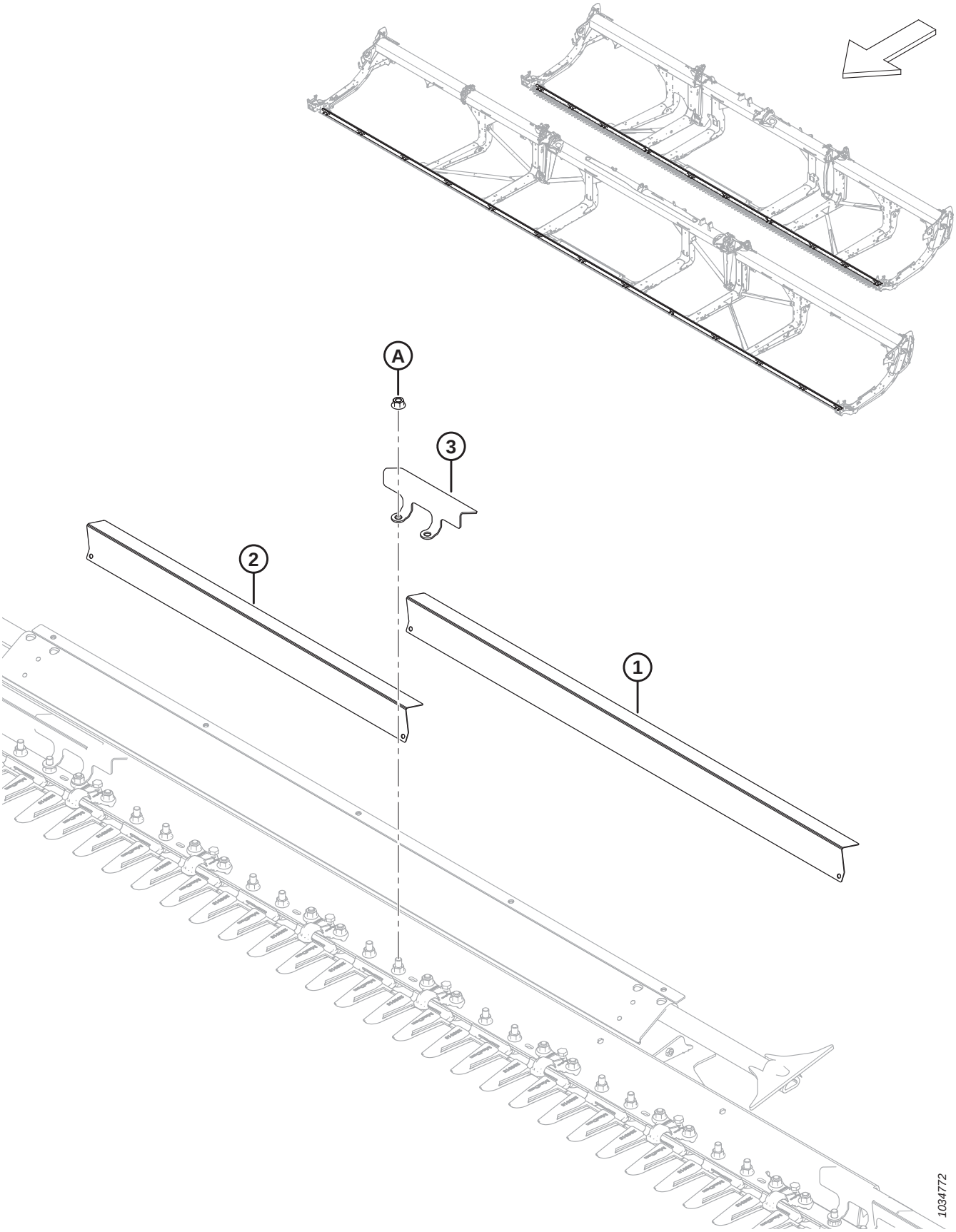

(OPTION) ROCK RETARDER KIT

Ref	Part Number	Description	Qty	Serial Number
	B7122	KIT – ROCK RETARDER, FD225, FD230, FD235, AND FD241 [522]		
	B7123	KIT – ROCK RETARDER KIT, FD240, FD245, AND FD250 [522]		
1	233800	DEFLECTOR – ROCK GUARD LONG [523]		
2	233799	DEFLECTOR – ROCK GUARD SHORT [524]		
3	233635	CLAMP – ROCK GUARD [525]		
A	136036	NUT – HEX SM FLG M12 X 1.75-8-AA1J		

522. Kits are available through Whole Goods only.
523. Quantities per kit: B7122 = 4, B7123 = 10.
524. Quantities per kit: B7122 = 9, B7123 = 4.
525. Quantities per kit: B7122 = 14, B7123 = 15.

129 (Option) Service Kit – Pointed Guards, Coarse Knives

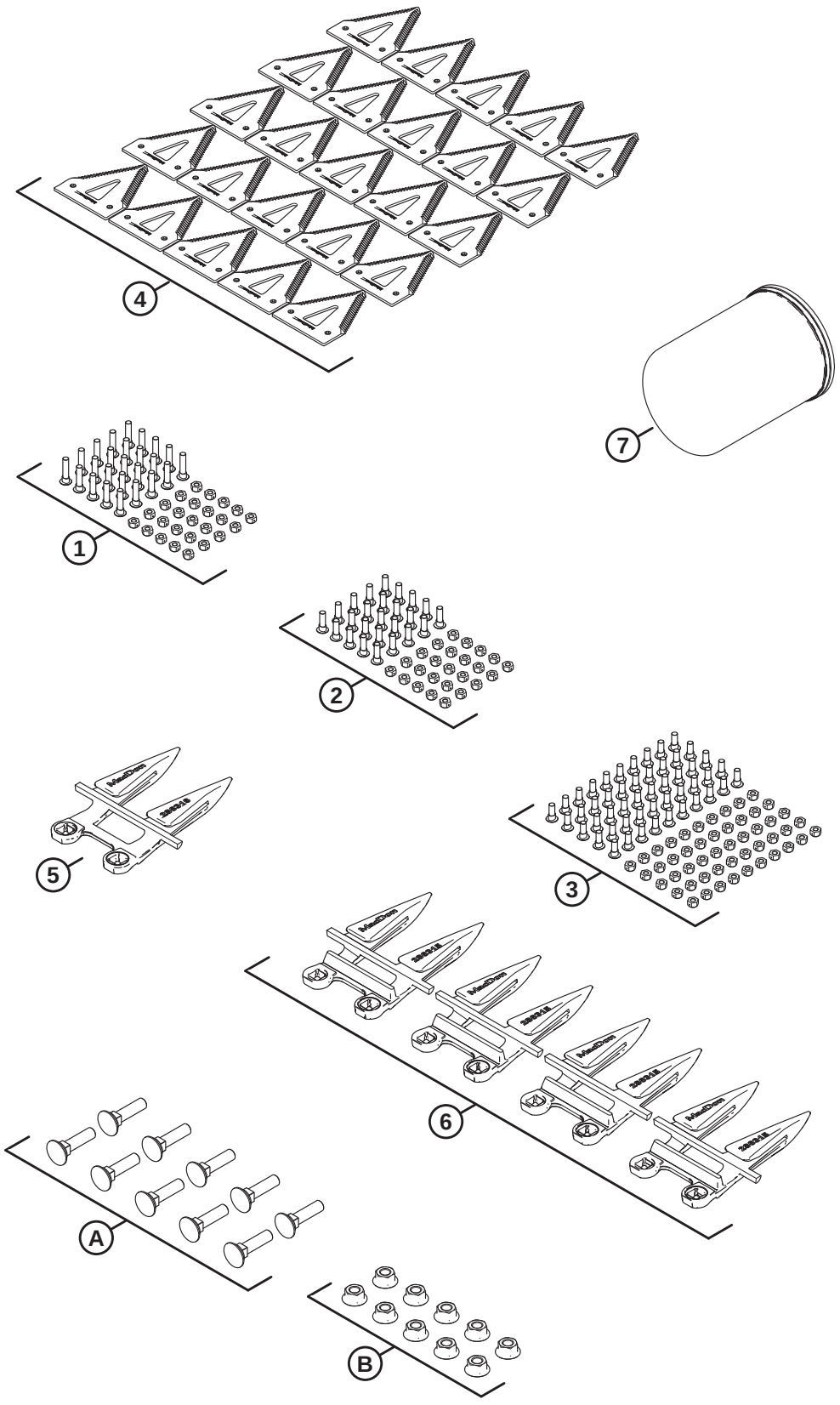

1034897

(OPTION) SERVICE KIT – POINTED GUARDS, COARSE KNIVES

Ref	Part Number	Description	Qty	Serial Number
	B7155	KIT – SERVICE, POINTED, COARSE [526]		
	311789	KIT – FD2 SERVICE PTD CRS [527]		
1	286477	KIT – SCREW M6 X 29 C/W NUT 25PK	1	
2	286476	KIT – SCREW M6 X 22 C/W NUT 25PK	1	
3	286475	KIT – SCREW M6 X 18 C/W NUT 50PK	1	
4	286461	SECTION – CLEARCUT COARSE 25PK	1	
5	286316	KNIFE GUARD – POINTED END	1	
6	286315	KNIFE GUARD – POINTED	4	
7	320360	FILTER – HYD C/W 2X SEALS	1	
A	226295	BOLT – RHSN SPCL M12 X 47-8.8		
B	136036	NUT – HEX SM FLG M12 X 1.75-8-AA1J		

526. Kits are available through Whole Goods only. This is not available for sale in North America.
527. The kit includes all listed parts.

130 (Option) Service Kit – PlugFree™ Guards, Coarse Knives

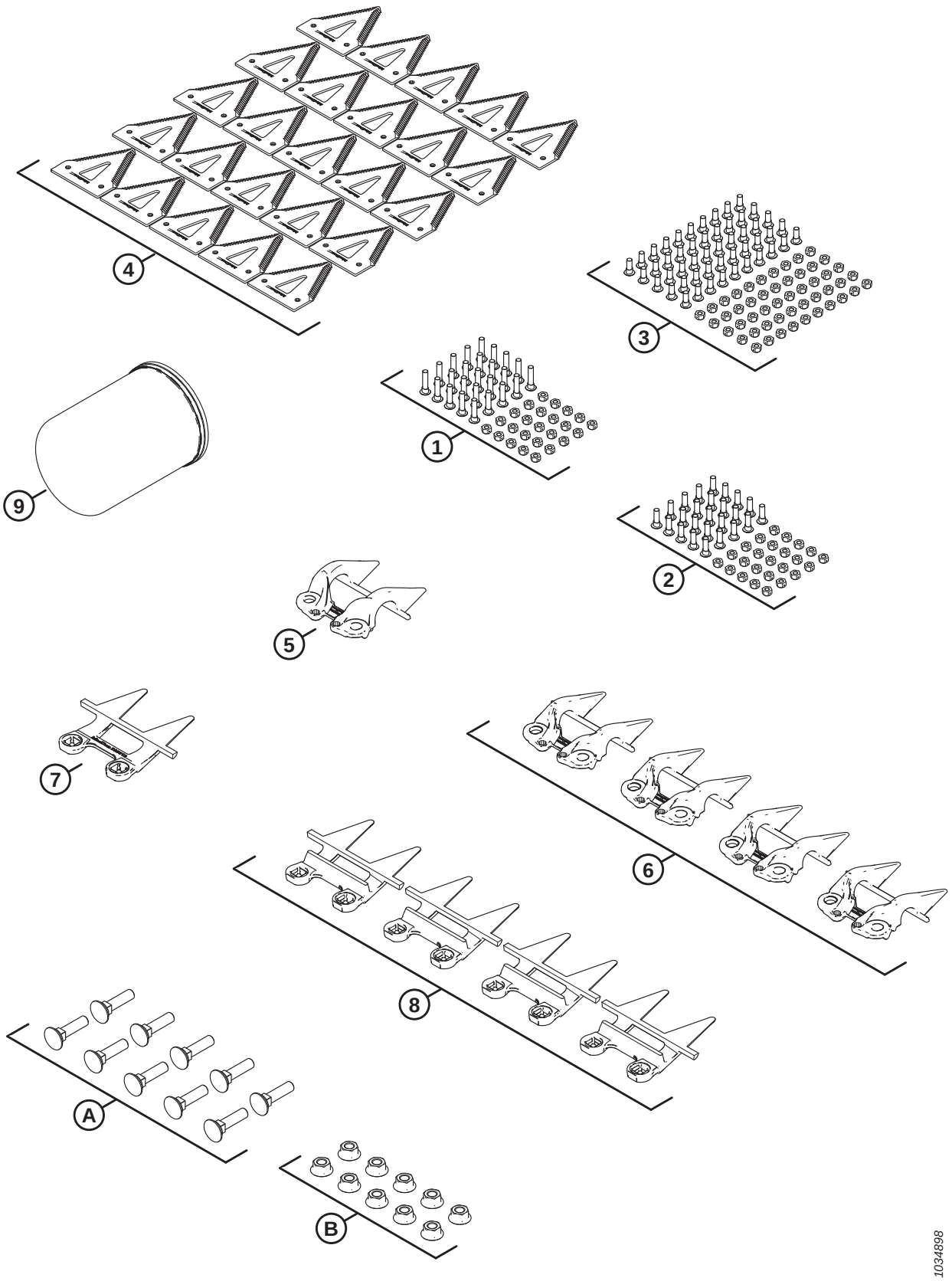

(OPTION) SERVICE KIT – PLUGFREE™ GUARDS, COARSE KNIVES

Ref	Part Number	Description	Qty	Serial Number
	B7156	KIT – SERVICE, PLUGFREE, COARSE [528]		
	311790	KIT – FD2 SERVICE PF CRS [529]		
1	286477	KIT – SCREW M6 X 29 C/W NUT 25PK	1	
2	286476	KIT – SCREW M6 X 22 C/W NUT 25PK	1	
3	286475	KIT – SCREW M6 X 18 C/W NUT 50PK	1	
4	286461	SECTION – CLEARCUT COARSE 25PK	1	
5	286331	HOLD-DOWN – PLUGFREE END	1	
6	286330	HOLD-DOWN – PLUGFREE	4	
7	286319	KNIFE GUARD – PLUGFREE END	1	
8	286318	KNIFE GUARD – PLUGFREE	4	
9	320360	FILTER – HYD C/W 2X SEALS	1	
A	226295	BOLT – RHSN SPCL M12 X 47-8.8		
B	136036	NUT – HEX SM FLG M12 X 1.75-8-AA1J		

528. Kits are available through Whole Goods only.
529. The kit includes all listed parts.

131 (Option) Service Kit Plus – Single Knife

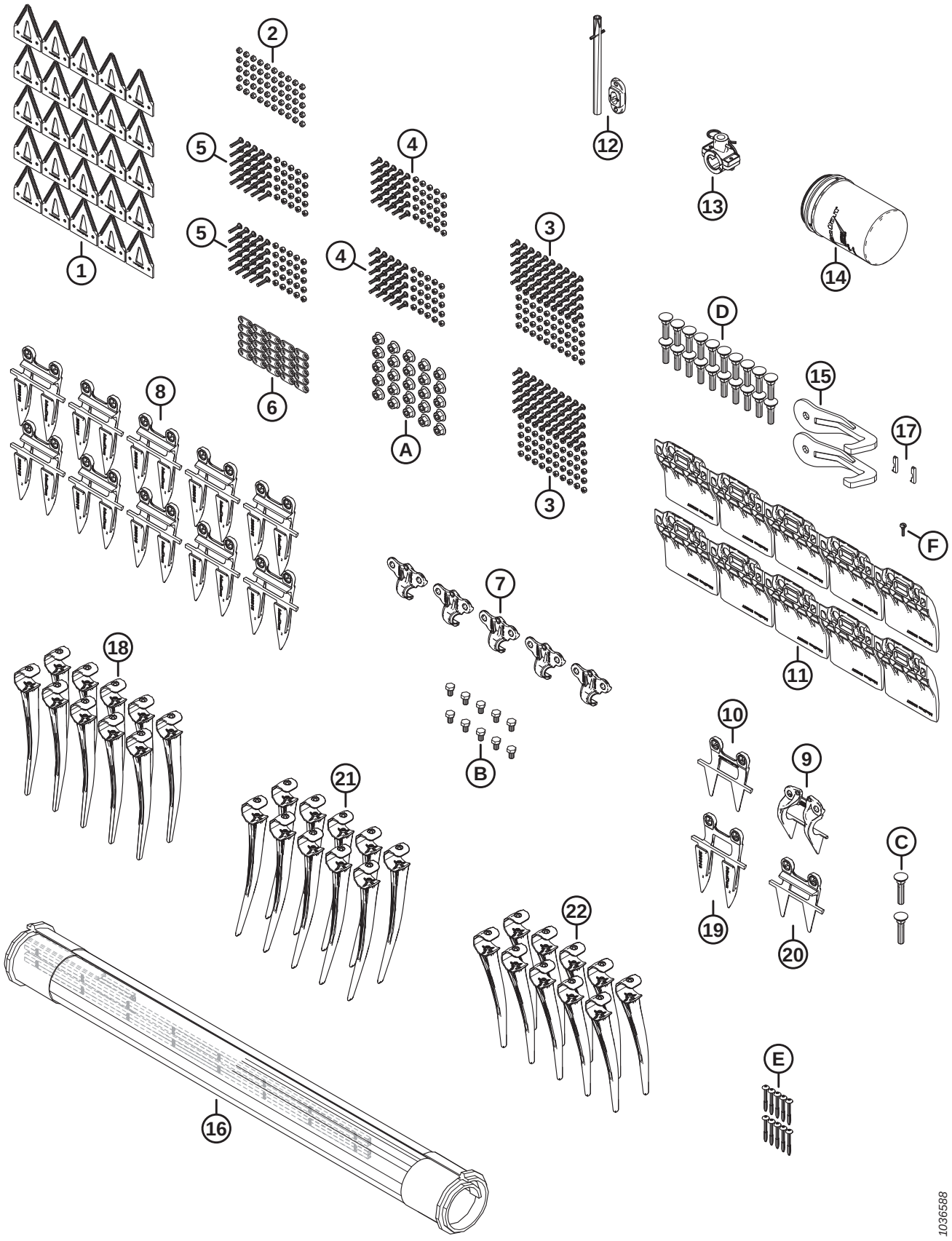

(OPTION) SERVICE KIT PLUS – SINGLE KNIFE

Ref	Part Number	Description	Qty	Serial Number
	B7365	KIT – SERVICE PLUS, SK FD2 [530]		
	340492	KIT – SERVICE PLUS, SK FD2 [531]		
1	286461	SECTION – CLEARCUT COARSE 25PK	1	
2	286479	KIT – NUT CTR LOC CSK M6 X 1 50PK	1	
3	286475	KIT – SCREW M6 X 18 C/W NUT 50PK	2	
4	286476	KIT – SCREW M6 X 22 C/W NUT 25PK	2	
5	286477	KIT – SCREW M6 X 29 C/W NUT 25PK	2	
6	286481	BAR – REINFORCEMENT 25PK	1	
7	286329	HOLD-DOWN – POINTED	5	
8	286315	KNIFE GUARD – POINTED	10	
9	286331	HOLD-DOWN – PLUGFREE END	1	
10	286319	KNIFE GUARD – PLUGFREE END	1	
11	286257	SHOE – WEARPLATE CUTTERBAR	10	
12	337152	KIT – FINGER [532]	1	
13	276839	KIT – FINGER HOLDER SPLIT, 5X [533]	1	
14	320360	FILTER – HYD C/W 2X SEALS	1	
15	258876	WELDT – BREAKAWAY HOOK	2	
16	319105	KIT – DRAPER REPAIR 50 INCH [534]	1	
	NSS	DRAPER – REPAIR-50 IN.-500 MM PIECE		
	319095	KIT – DRAPER CONNECTOR 50 INCH [535]		
17	275864	KEY – DRAPER DRIVE MOTOR	2	
18	174849	FINGER – PLASTIC HEAVY DUTY (PKG OF 10)	1	
19	286316	KNIFE GUARD – POINTED END	1	
20	286318	KNIFE GUARD – PLUGFREE	1	
21	311523	FINGER – PLASTIC, RH ANGLED, 52 MM (PKG OF 10)	1	
22	360540	FINGER – PLASTIC, LH ANGLED, 45 MM (PKG OF 10)	1	
A	136036	NUT – HEX SM FLG M12 X 1.75-8-AA1J		
B	136005	BOLT – HEX HD FINE TFL M10 X 1.25 X 16-8.8-AA1J		
C	226280	BOLT – RHSN SPCL M12 X 60-8.8		
D	226295	BOLT – RHSN SPCL M12 X 47-8.8		

530. Kits are available through Whole Goods only.
531. The kit includes all listed parts.
532. The kit includes spring pin (MD #7642) and guide (MD #337143).
533. The kit includes 5 split finger holders (NSS), 10 spacers (NSS), 5 hairpins (MD #123180), hardware, and instructions.
534. The kit includes draper repair section (NSS) and two draper connector kits (MD #319095).
535. For service parts, refer to Section *10 Draper, page 21*.

(OPTION) SERVICE KIT PLUS – SINGLE KNIFE

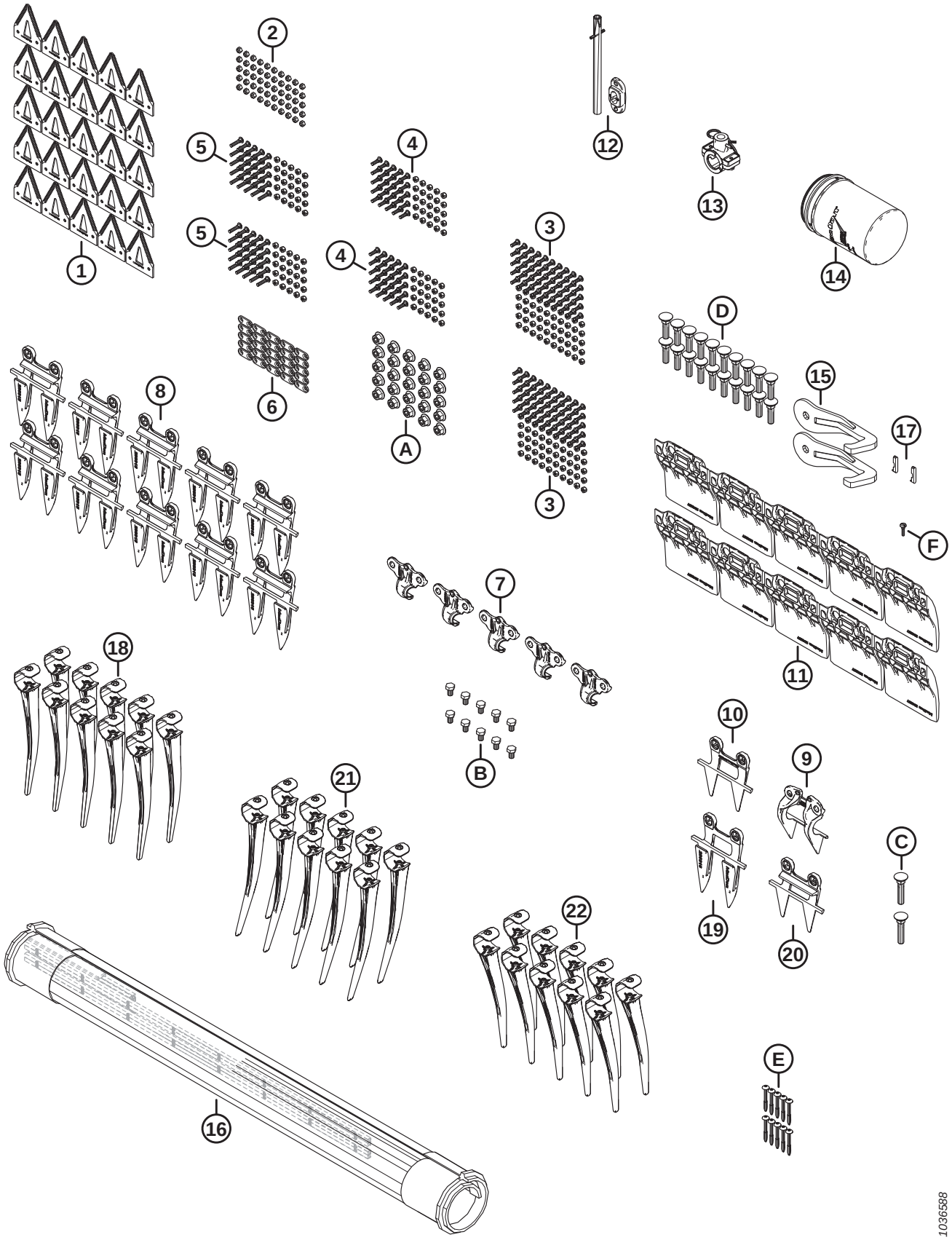

(OPTION) SERVICE KIT PLUS – SINGLE KNIFE

Ref	Part Number	Description	Qty	Serial Number
E	252687	SCREW – 48° PLASTITE TWIN HELIX		
F	135630	SCREW – BHRN #12-24 NC X 0.920 IN. LG (QTY 50)		

132 (Option) Service Kit Plus – Double Knife

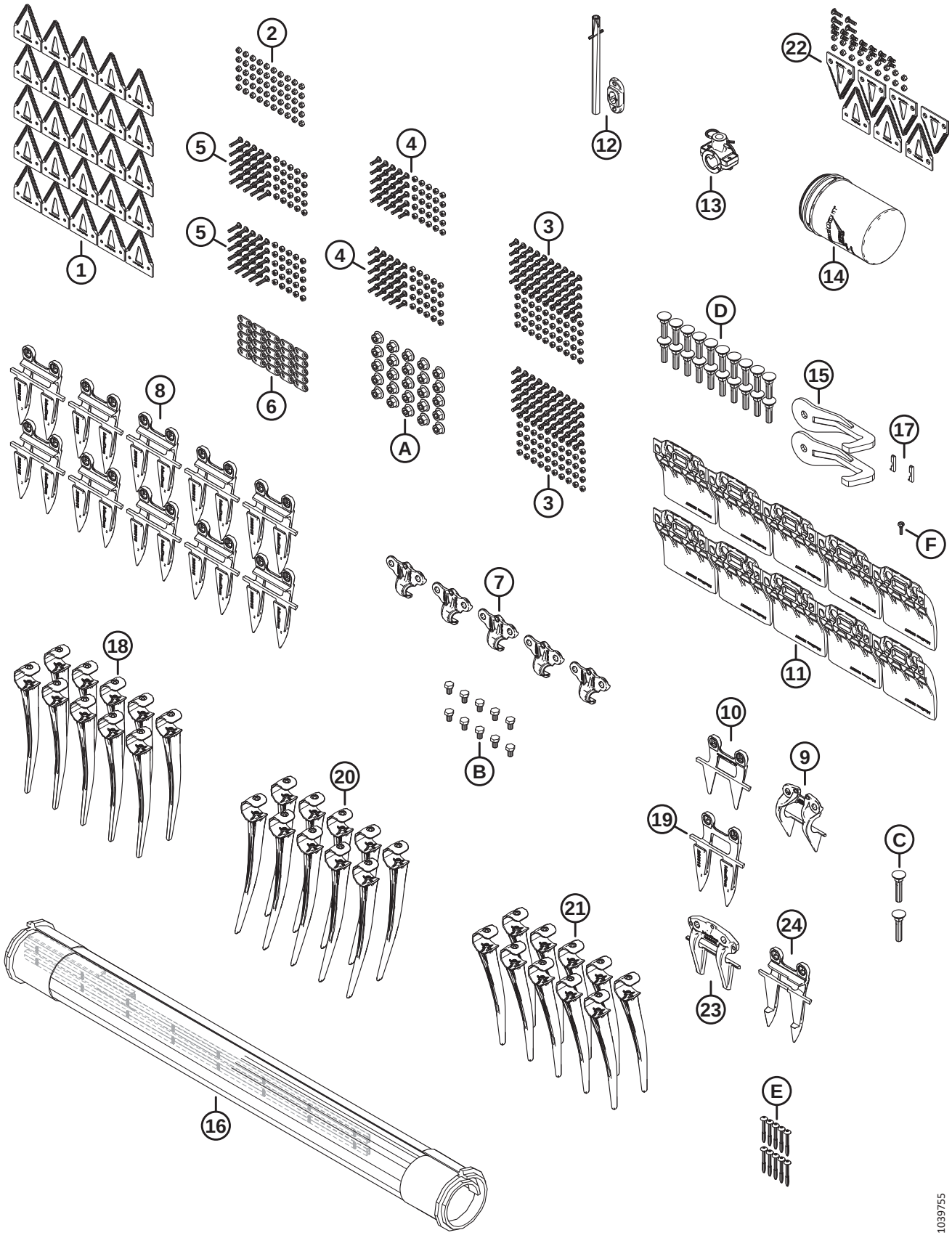

(OPTION) SERVICE KIT PLUS – DOUBLE KNIFE

Ref	Part Number	Description	Qty	Serial Number
	B7366	KIT – SERVICE PLUS, DK FD2 [536]		
	340493	KIT – SERVICE PLUS, DK FD2 [537]		
1	286461	SECTION – CLEARCUT COARSE 25PK	1	
2	286479	KIT – NUT CTR LOC CSK M6 X 1 50PK	1	
3	286475	KIT – SCREW M6 X 18 C/W NUT 50PK	2	
4	286476	KIT – SCREW M6 X 22 C/W NUT 25PK	2	
5	286477	KIT – SCREW M6 X 29 C/W NUT 25PK	2	
6	286481	BAR – REINFORCEMENT 25PK	1	
7	286329	HOLD-DOWN – POINTED	5	
8	286315	KNIFE GUARD – POINTED	10	
9	286331	HOLD-DOWN – PLUGFREE END	1	
10	286319	KNIFE GUARD – PLUGFREE END	1	
11	286257	SHOE – WEARPLATE CUTTERBAR	10	
12	337152	KIT – FINGER [538]	1	
13	276839	KIT – FINGER HOLDER SPLIT, 5X [539]	1	
14	320360	FILTER – HYD C/W 2X SEALS	1	
15	258876	WELDT – BREAKAWAY HOOK	2	
16	319105	KIT – DRAPER REPAIR 50 INCH [540]	1	
	NSS	DRAPER – REPAIR-50 IN.-500 MM PIECE		
	319095	KIT – DRAPER CONNECTOR 50 INCH [541]		
17	275864	KEY – DRAPER DRIVE MOTOR	2	
18	174849	FINGER – PLASTIC HEAVY DUTY (PKG OF 10)	1	
19	286316	KNIFE GUARD – POINTED END	1	
20	311523	FINGER – PLASTIC, RH ANGLED, 52 MM (PKG OF 10)	1	
21	360540	FINGER – PLASTIC, LH ANGLED, 45 MM (PKG OF 10)	1	
22	286861	KIT – CLEARCUT COARSE CENTER [542]	1	
23	286332	HOLD-DOWN – POINTED CENTER	1	
24	286317	KNIFE GUARD – POINTED CENTER	1	
A	136036	NUT – HEX SM FLG M12 X 1.75-8-AA1J		
B	136005	BOLT – HEX HD FINE TFL M10 X 1.25 X 16-8.8-AA1J		

536. Kits are available through Whole Goods only. This kit is not available for sale in North America.
537. The kit includes all listed parts.
538. The kit includes spring pin (MD #7642) and guide (MD #337143).
539. The kit includes 5 split finger holders (NSS), 10 spacers (NSS), 5 hairpins (MD #123180), hardware, and instructions.
540. The kit includes draper repair section (NSS) and two draper connector kits (MD #319095).
541. For service parts, refer to Section *10 Draper, page 21*.
542. The kit includes five ClearCut™ coarse top sections (NSS), two ClearCut™ coarse bottom sections (NSS), and hardware.

(OPTION) SERVICE KIT PLUS – DOUBLE KNIFE

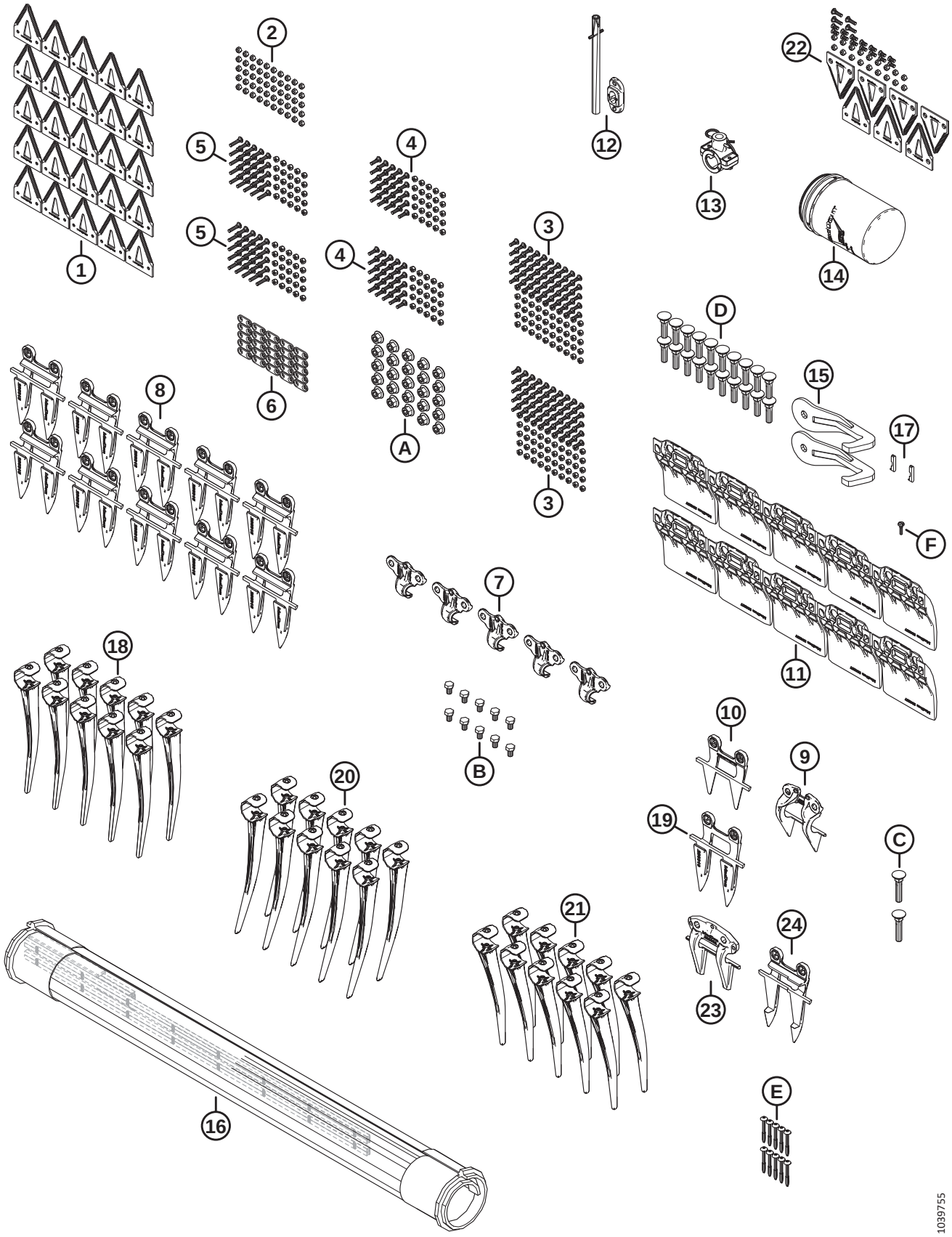

(OPTION) SERVICE KIT PLUS – DOUBLE KNIFE

Ref	Part Number	Description	Qty	Serial Number
C	226280	BOLT – RHSN SPCL M12 X 60-8.8		
D	226295	BOLT – RHSN SPCL M12 X 47-8.8		
E	252687	SCREW – 48° PLASTITE TWIN HELIX		
F	135630	SCREW – BHRN #12-24 NC X 0.920 IN. LG (QTY 50)		

133 (Option) Side Hill Stabilizer Kit

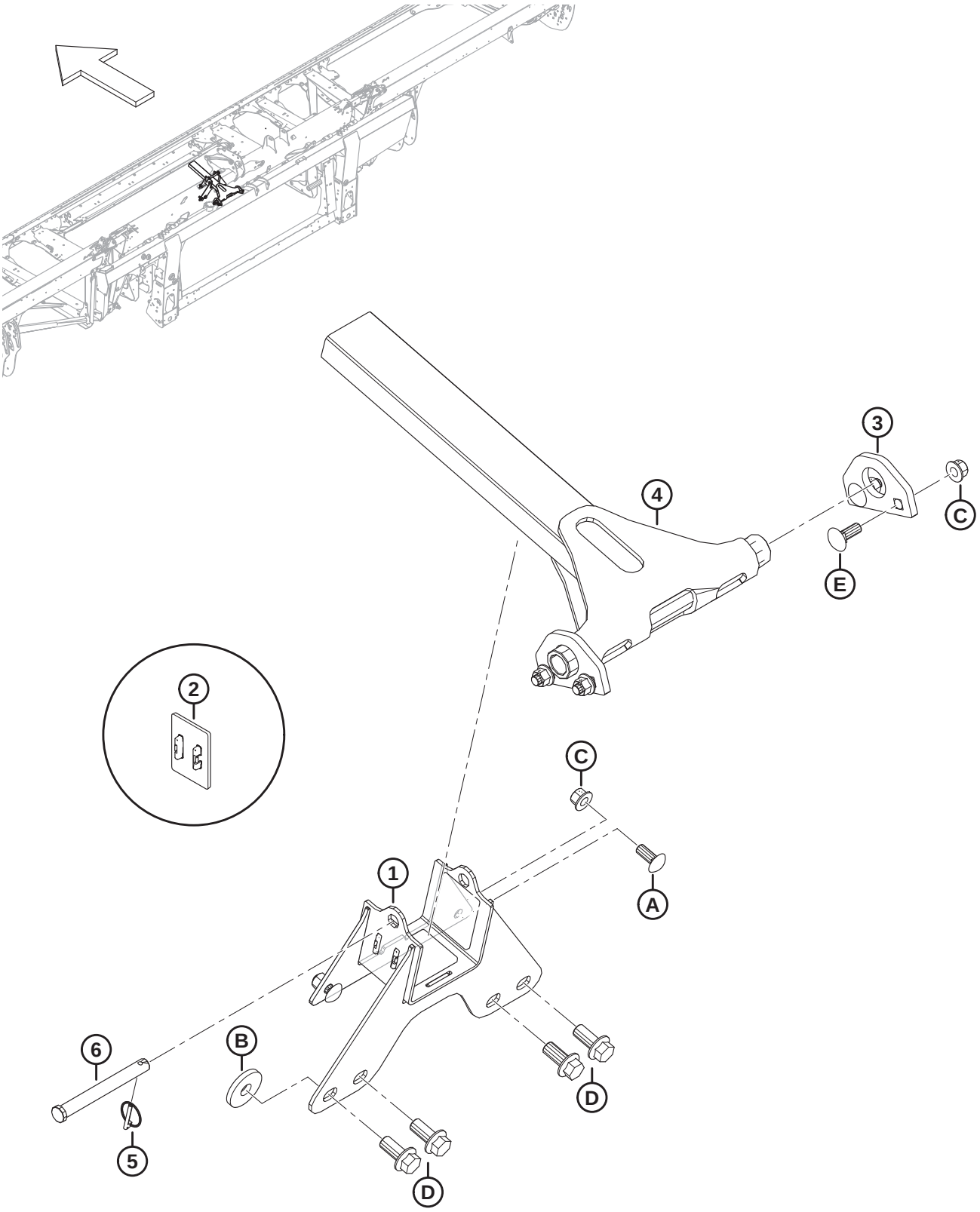

(OPTION) SIDE HILL STABILIZER KIT

Ref	Part Number	Description	Qty	Serial Number
	B7028	KIT – SIDE HILL STABILIZER [543]		
1	258732	ASSY – SIDE HILL STAB. BRACKET [544]	1	
2	273831	PAD – REEL DRIVE WEAR	3	
3	258343	LUG – SIDE HILL STABILIZER	2	
4	258326	WELDT – SIDE HILL STABILIZER	1	
5	50193	PIN – LYNCH	1	
6	49378	PIN – CLEVIS	1	
A	152702	BOLT – RHSSN M12 X 1.75 X 30-8.8-AA1J		
B	152009	WASHER – HARDENED 5/8		
C	136431	NUT – HEX FLG CTR LOC M12 X 1.75-10		
D	136378	BOLT – HEX FLG HD TFL M16 X 2 X 35-10.9		
E	136291	BOLT – RHSN TFL M12 X 1.75 X 35-8.8-ZINC		

543. Kits are available through Whole Goods only.
544. The bracket assembly includes three wear pads (MD #273831).

134 (Option) Stabilizer Wheels

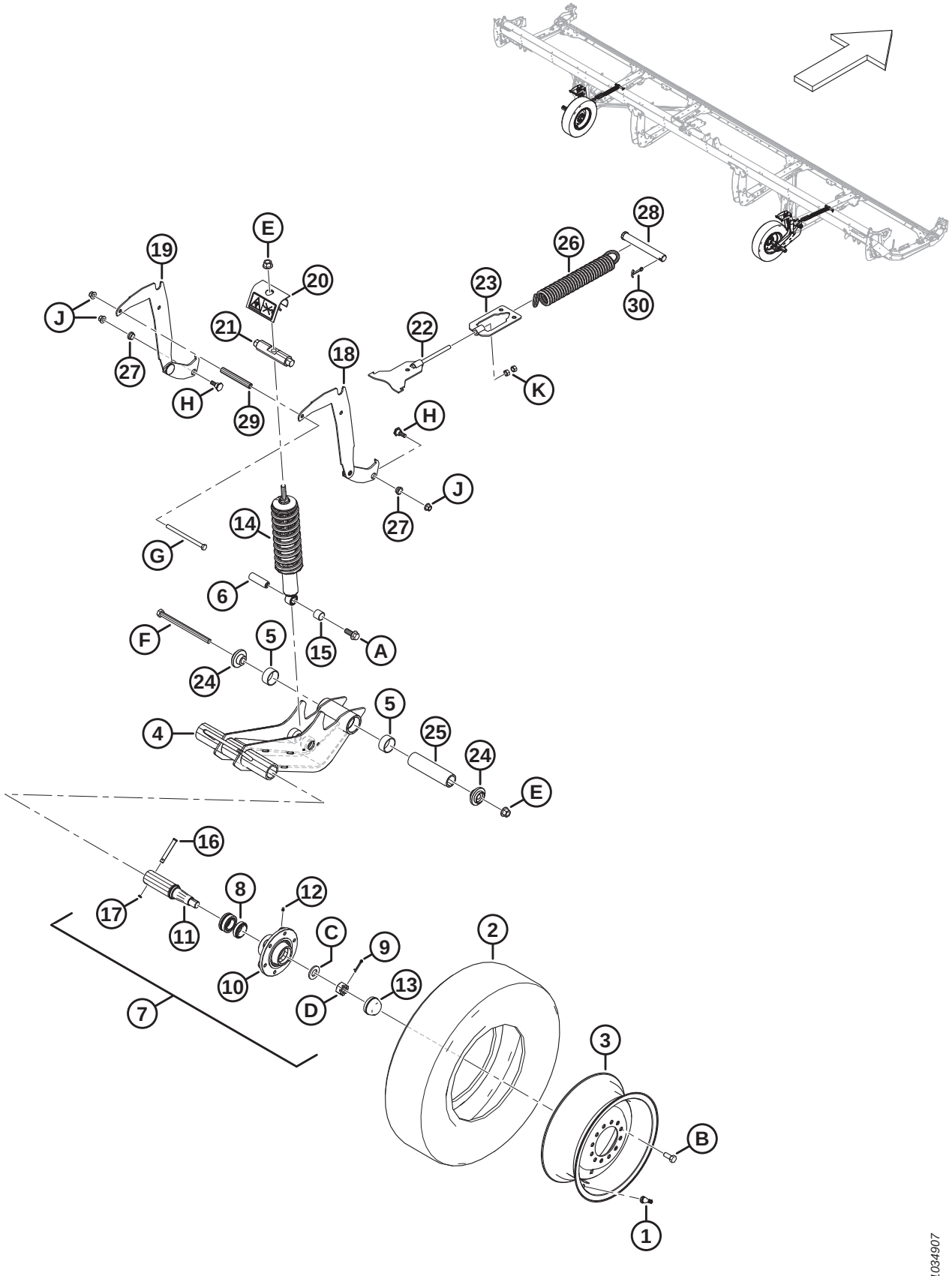

(OPTION) STABILIZER WHEELS

Ref	Part Number	Description	Qty	Serial Number
	C2171	STABILIZER WHEELS – KIT [545]		
	B7398	KIT – TIRES, 225/75R15 LRF [545]		
1	230968	STEM – TIRE VALVE ASSY #TR-416	2	
2	327808	TIRE – ST 225/75 R15 LRF	2	
3	327807	WHEEL – 15 X 6 WHITE [546]	2	
	144531	WHEEL – 15 X 6 LB [547]	A/R	
	327802	DECAL – TIRE PRESSURE, 655 KPA (95 PSI) [548]	2	
	327717	DECAL – TIRE PRESSURE, 552 KPA (80 PSI) [549]	A/R	
	B6460	KIT – STABILIZER WHEELS [545]		
4	327682	ASSY – PIVOT ARM [550]	2	
5	327600	BUSHING – COMPOSITE	4	
6	316793	PIN	2	
7	316330	ASSY – HUB [551]	2	
8	316851	KIT – WHEEL BEARING	2	
9	18608	PIN – COTTER 3/16 DIA X 1.5 ZP	2	
10	316847	HUB	2	
11	316848	SPINDLE	2	
12	18671	FITTING – LUBE 1/4-28 UNF	2	
13	30520	CAP – DUST	2	
14	327798	DAMPENER – HEADER [552]	2	
15	133992	BUSHING – COMPOSITE	2	
16	101007	PIN – CLEVIS	2	
17	18648	PIN – COTTER 3/16 DIA X 1.25 ZP	2	
18	327656	WELDT – SUPPORT, HEIGHT ADJUST	2	

545. Kits are available through Whole Goods only.
546. Wheel (MD #327807) is used with tire (MD #327808).
547. Wheel (MD #144531) remains available as a service part for superseded tire (MD #230483). Wheel (MD #144531) is **NOT** included in Wheels and Tires Kit B7398.
548. Tire pressure decal (MD #327802) (655 kPa [95 psi]) is used with tire (MD #327808).
549. Tire pressure decal (MD #327717) (552 kPa [80 psi]) remains available as a service part for superseded tire (MD #230483).
550. The pivot arm assembly includes two composite bushings (MD #327600).
551. The hub assembly includes pin (MD #18608), fitting (MD #18671), six bolts (MD #18916), dust cap (MD #30520), hub (MD #316847), spindle (MD #316848), wheel bearing kit (MD #316851), nut (MD #316859), and washer (MD #316860).
552. The dampener includes composite bushing (MD #133992).

(OPTION) STABILIZER WHEELS

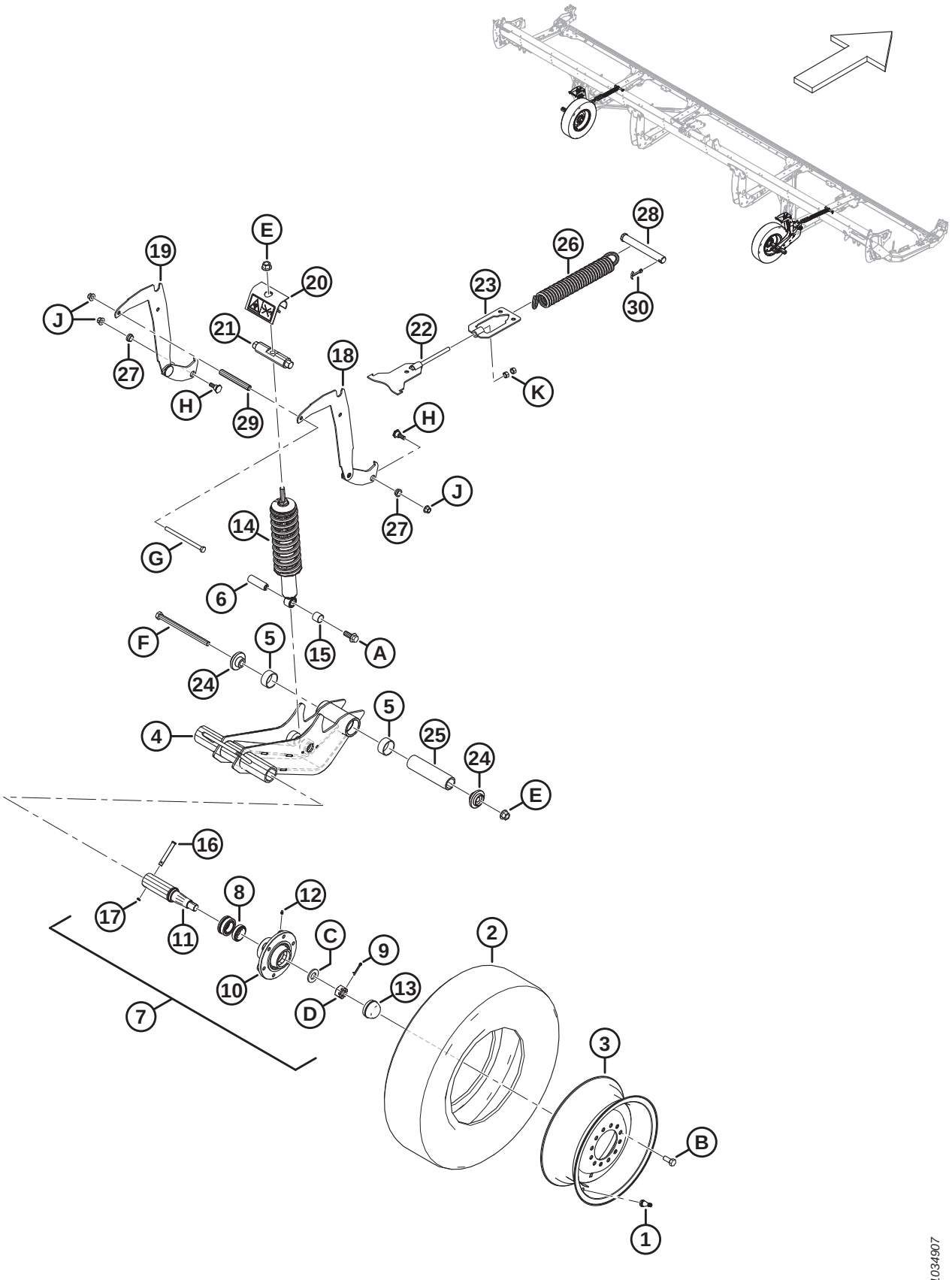

(OPTION) STABILIZER WHEELS

Ref	Part Number	Description	Qty	Serial Number
19	327655	WELDT – SUPPORT, HEIGHT ADJUST	2	
20	327089	ASSY – ANTI PRY [553]	2	
21	316284	PIN	2	
22	316096	SUPPORT – WELDT	2	
23	316095	SUPPORT – WELDT	2	
24	303839	CASTING – PLATE	4	
25	303525	PIN – PIVOT	2	
26	303520	SPRING – EXTENSION	2	
27	303492	BUSHING – COMPOSITE	4	
28	292692	PIN – CLEVIS	2	
29	210985	SPACER	2	
30	18609	PIN – COTTER 1/4 DIA X 2 ZP	2	
	327086	DECAL – ENERGY RELEASE	2	
	316662	DECAL – HEIGHT SETTING	2	
A	320060	BOLT – HEX FLG HD TFL M16 X 2 X 40-10.9-ZINC		
B	18916	BOLT – 90° WHEEL 9/16 NF X 1.75 OL-AA1J		
C	316860	WASHER		
D	316859	NUT – SLOTTED		
E	136440	NUT – HEX FLG CTR LK M16 X 2-10-AA1J		
F	320011	BOLT – HEX HD M16 X 2 X 240-10.9-ZINC		
G	252272	BOLT – HEX HD TFL M12 X 1.75 X 180-10.9-ZINC		
H	303251	BOLT – 19 MM SHLDR M12 SPCL		
J	136431	NUT – HEX FLG CTR LOC M12 X 1.75-10		
K	135156	NUT – HEX M12 X 1.75-10-AA1J		

553. The anti-pry assembly includes energy release decal (MD #327086).

135 (Option) Steel Finger Kit

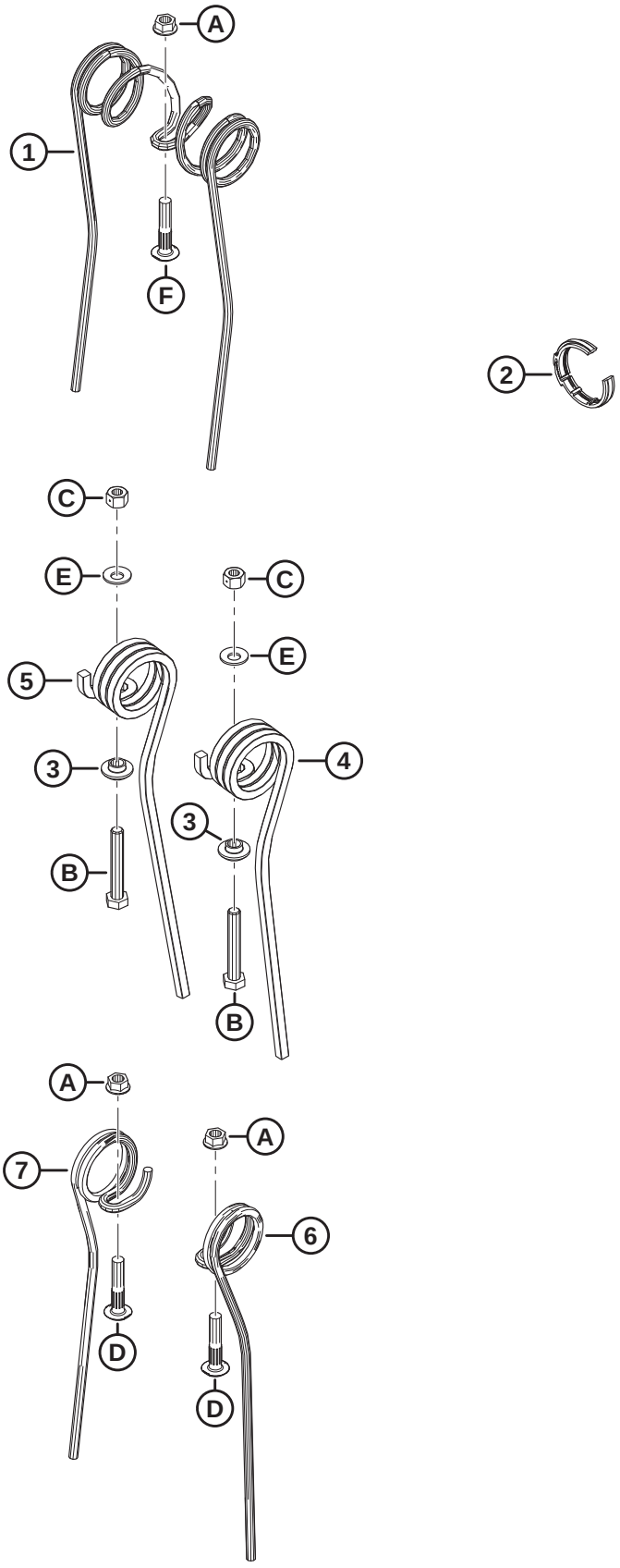

1036678

(OPTION) STEEL FINGER KIT

Ref	Part Number	Description	Qty	Serial Number
	360679	KIT – STEEL FINGER, 25 FT SR, 6 BAT [554]		
	311054	KIT – STEEL FINGER, 30 FT DR, 5 BAT [554]		
	311055	KIT – STEEL FINGER, 30 FT DR, 6 BAT [554]		
	311068	KIT – STEEL FINGER, 35 FT DR, 5 BAT [554]		
	311069	KIT – STEEL FINGER, 35 FT DR, 6 BAT [554]		
1	137092	FINGER [555]		
2	220941	CLAMP – TINE TUBE BUSHING - CENTER RIB (BOX OF 5) [556]		
3	273052	RETAINER – END FINGER [557]		
4	311321	FINGER – TAIL END OUTBOARD [558]		
5	311322	FINGER – TAIL END INBOARD [559]		
6	137754	FINGER – RH SINGLE CONCENTRIC [560]		
7	137519	FINGER – LH SINGLE CONCENTRIC [561]		
A	30228	NUT – FLG DT SM FACE 3/8-16 UNC-GR5-AA1J		
B	108172	BOLT – HEX HD M10 X 1.5 X 65-8.8-AA1J		
C	135800	NUT – HEX CTR LOC SPCL M10 X 1.5-9-AA1J		
D	137118	BOLT –BTN HD RIB NK 3/8 NC		
E	184584	WASHER – CON SPRING M10 STL SAE		

554. The kit includes all listed parts and instructions. Refer to the footnotes on individual service parts for quantities.
555. Quantities: FD225 SR 6 Bat = 135, FD230 DR 5 Bat = 135, FD230 DR 6 Bat = 135, FD235 DR 5 Bat = 143, FD235 DR 6 Bat = 171.
556. Quantities: FD225 SR 6 Bat = 6, FD230 DR 5 Bat = 6, FD230 DR 6 Bat = 8, FD235 DR 5 Bat = 8, FD235 DR 6 Bat = 10.
557. Quantities: FD225 SR 6 Bat = 6, FD230 DR 5 Bat = 10, FD230 DR 6 Bat = 12, FD235 DR 5 Bat = 10, FD235 DR 6 Bat = 12.
558. Quantities: FD225 SR 6 Bat = 6, FD230 DR 5 Bat = 5, FD230 DR 6 Bat = 6, FD235 DR 5 Bat = 5, FD235 DR 6 Bat = 6.
559. Quantities: FD225 SR 6 Bat = 0, FD230 DR 5 Bat = 5, FD230 DR 6 Bat = 6, FD235 DR 5 Bat = 5, FD235 DR 6 Bat = 6.
560. Quantities: FD225 SR 6 Bat = 12, FD230 DR 5 Bat = 4, FD230 DR 6 Bat = 6, FD235 DR 5 Bat = 18, FD235 DR 6 Bat = 24.
561. Quantities: FD225 SR 6 Bat = 9, FD230 DR 5 Bat = 10, FD230 DR 6 Bat = 12, FD235 DR 5 Bat = 30, FD235 DR 6 Bat = 36.

136 (Option) Steel Reel End Finger Kits

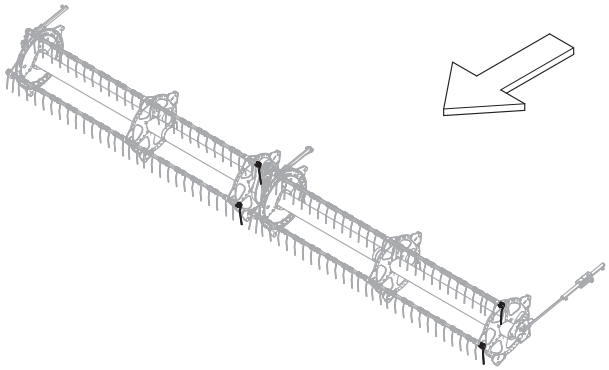

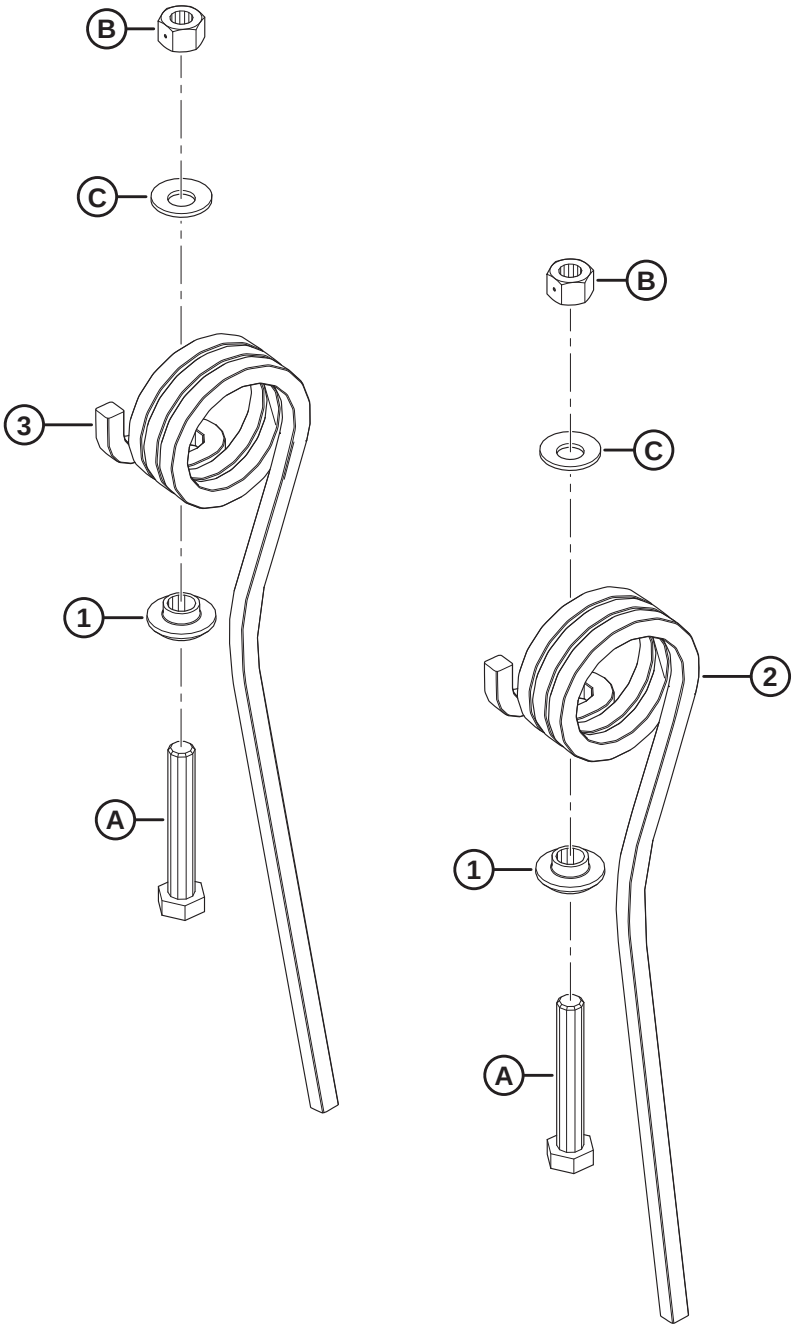

1041509

(OPTION) STEEL REEL END FINGER KITS

Ref	Part Number	Description	Qty	Serial Number
	311959	KIT – STEEL END FINGER, OUTBOARD [562]		
	311972	KIT – STEEL END FINGER, INBOARD [563]		
1	273052	RETAINER – END FINGER	1	
2	311321	FINGER – TAIL END OUTBOARD [564]		
3	311322	FINGER – TAIL END INBOARD [565]		
A	108172	BOLT – HEX HD M10 X 1.5 X 65-8.8-AA1J		
B	135800	NUT – HEX CTR LOC SPCL M10 X 1.5-9-AA1J		
C	184584	WASHER – CON SPRING M10 STL SAE		

562. The Outboard Steel End Finger Kit includes one tail end outboard steel finger (MD #311321), all listed hardware, and instructions.
563. The Inboard Steel End Finger Kit includes one tail end inboard steel finger (MD #311322), all listed hardware, and instructions.
564. Quantities: kit MD #311959 = 1, kit MD #311972 = 0.
565. Quantities: kit MD #311959 = 0, kit MD #311972 = 1.

137 (Option) Stubble Lights

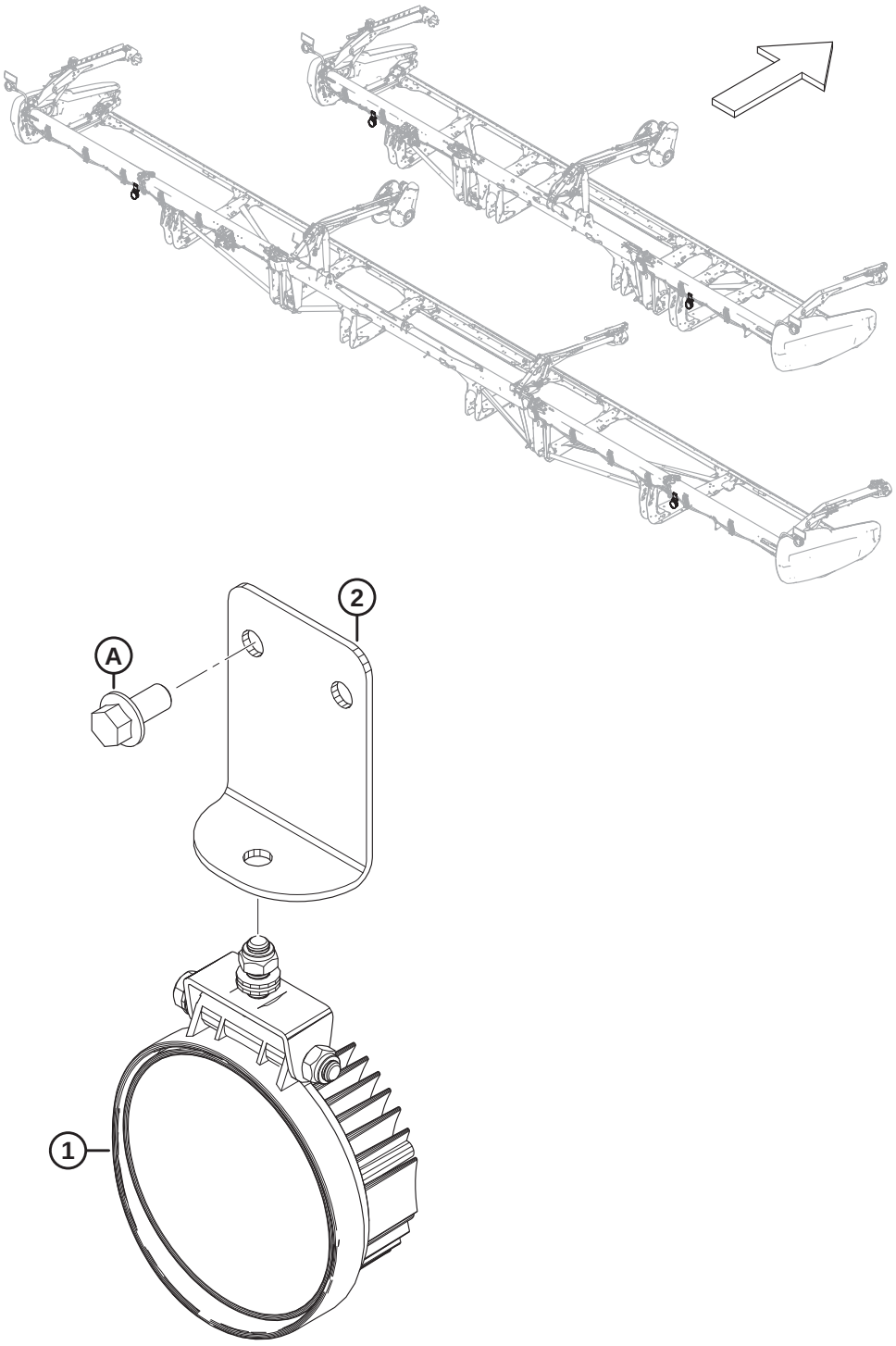

1032898

(OPTION) STUBBLE LIGHTS

NOTE:

The Stubble Lights kit is compatible with model year 2019 and later New Holland combines only.

Ref	Part Number	Description	Qty	Serial Number
	B7027	KIT – STUBBLE LIGHTS [566]		
1	258458	LIGHT	2	
2	258454	BRACKET – STUBBLE LIGHTS	2	
A	152655	BOLT – HEX FLG HD M10 X 1.5 X 20-8.8-AA1J		

566. Kits are available through Whole Goods only.

138 (Option) Sunflower Attachment – Base Kit – Lean Bar and Deflectors

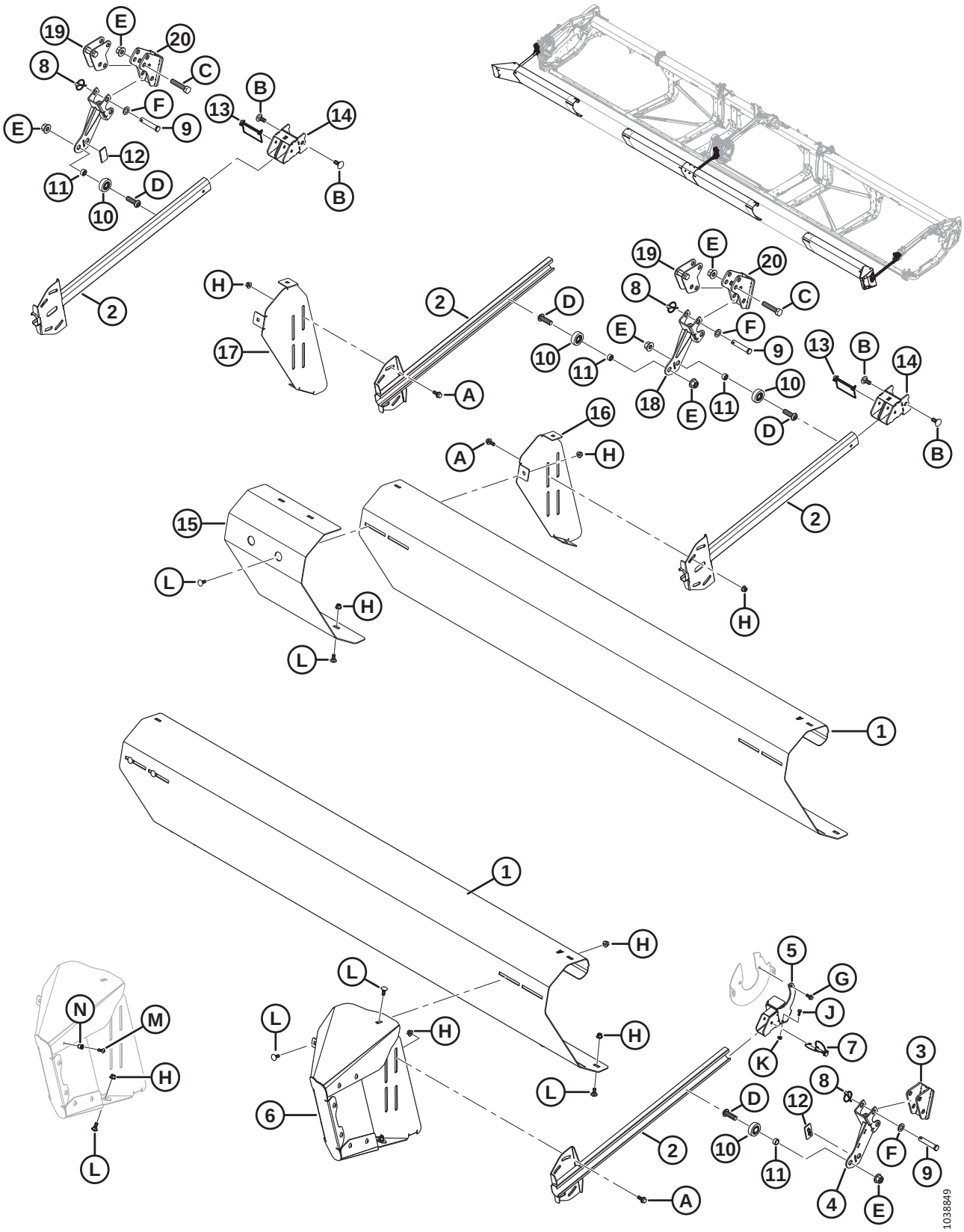

(OPTION) SUNFLOWER ATTACHMENT – BASE KIT – LEAN BAR AND DEFLECTORS

NOTE:

The Sunflower Attachment is compatible with pointed knife guards only.

Ref	Part Number	Description	Qty	Serial Number
	C2086	KIT – 30 FOOT SUNFLOWER ATTACHMENT [567]		
	C2087	KIT – 35 FOOT SUNFLOWER ATTACHMENT [567]		
	C2088	KIT – 40/41 FOOT SUNFLOWER ATTACHMENT (DOUBLE REEL) [567]		
	C2169	KIT – 40 FOOT SUNFLOWER ATTACHMENT (TRIPLE REEL) [567]		
	C2089	KIT – 45 FOOT SUNFLOWER ATTACHMENT [567]		
	C2170	KIT – 50 FOOT SUNFLOWER ATTACHMENT [567]		
	B7302	KIT – SUNFLOWER ATTACHMENT, BASE [568]		
1	119691	DEFLECTOR – LEAN BAR A [569]	4	
2	119757	ARM – PUSH BAR WELDT	4	
3	119593	SUPPORT – LEAN BAR WELDT	1	
4	119667	SUPPORT – LEAN BAR WELDT	1	
5	119666	BRACKET – HANGING WELDT	1	
6	119706	DEFLECTOR-EXTENSION ASSY – LH [570]	1	
	119705	DEFLECTOR-EXTENSION ASSY – RH [570]	1	
7	320205	PIN – LYNCH DIA 5/16 IN. X 1.75 IN. LG W/ TETHER	1	
8	102264	PIN – LYNCH 3/16 X 9/16 IN.	6	
9	18624	PIN – CLEVIS	6	
10	273524	BEARING – CAM FOLLOWER	4	
11	101095	SPACER	4	
12	273777	PAD – REEL DRIVE WEAR	2	
13	136749	PIN – LYNCH	2	
14	119738	BRACKET – WELDT	2	
15	119725	DEFLECTOR – LEAN BAR FILLER	1	
16	119696	BRACKET – LEAN BAR MOUNT, LH	1	
17	119697	BRACKET – LEAN BAR MOUNT, RH	1	
18	119672	SUPPORT – LEAN BAR WELDT	2	
19	119641	ANCHOR – FORE AFT SUBWELDT	2	
20	119623	SUPPORT – FRONT ANCHOR WELDT	2	

567. Kit contains base kit (B7302), pans kit (B7303), and deflectors kit (B7304, B7305, B7306, B7395, B7307, or B7396). Kits are available through Whole Goods only.
568. Base kit B7302 includes all parts listed in this section and Section *139 (Option) Sunflower Attachment – Base Kit – Pans and Supports, page 371*. Kits are available through Whole Goods only.
569. Four deflectors (MD #119691) are included in the base kit. FD245 and FD250 headers require a total of six.
570. Includes eight Torx screws (MD #320190), eight rivnuts (MD #252179), one bolt (MD #135785), and one nut (MD #135799).

(OPTION) SUNFLOWER ATTACHMENT – BASE KIT – LEAN BAR AND DEFLECTORS

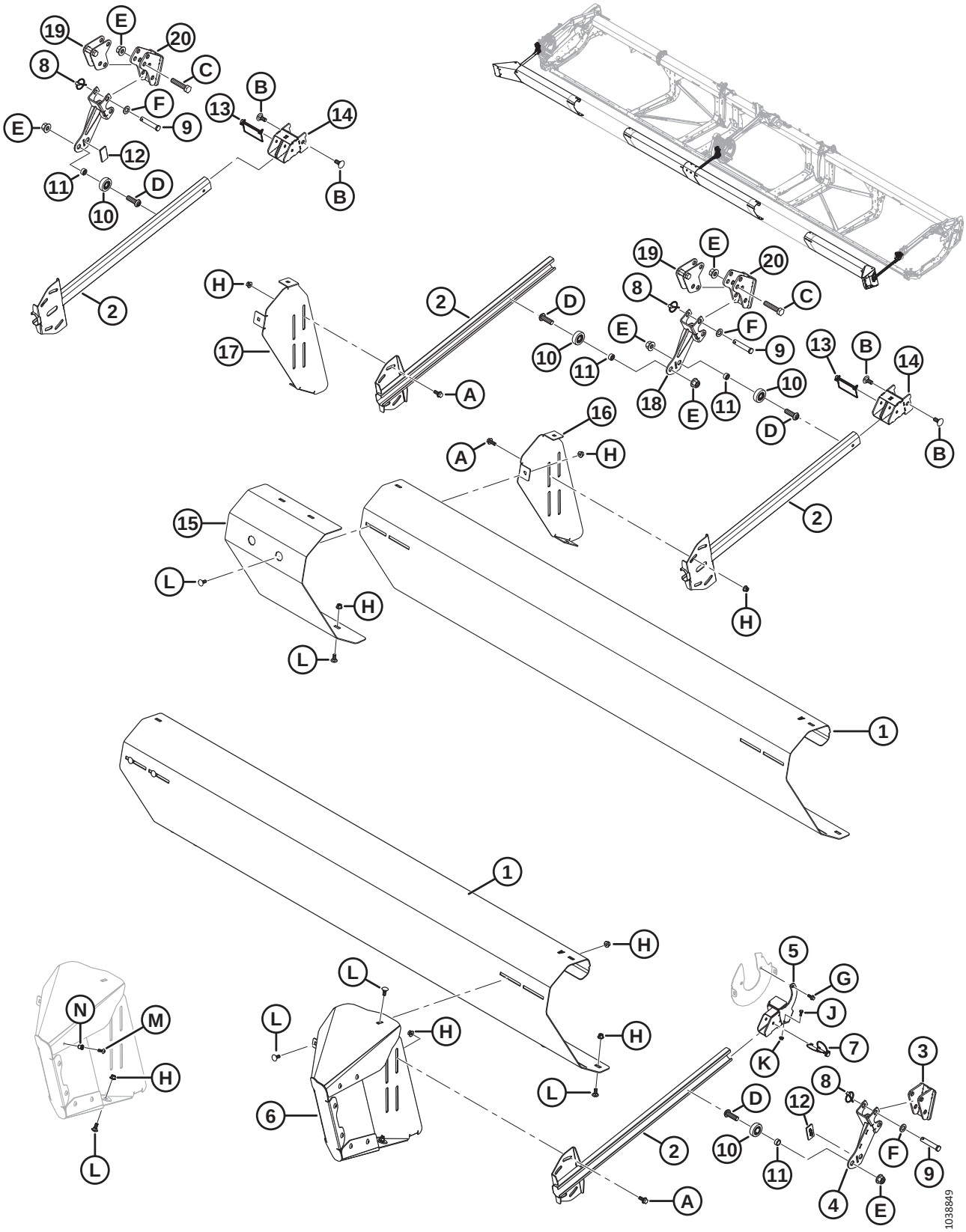

(OPTION) SUNFLOWER ATTACHMENT – BASE KIT – LEAN BAR AND DEFLECTORS

Ref	Part Number	Description	Qty	Serial Number
A	135783	BOLT – HEX FLG HD TFL M10 X 1.5 X 25-10.9-AA1J		
B	184667	BOLT – RHSN M12 X 1.75 X 30-8.8-ZINC		
C	181475	BOLT – HEX HD M16 X 2 X 75-8.8-BE0R		
D	320441	SCREW – HEX SOC BTN HD M16 X 2.0 X 50-10.9-AA1J		
E	136440	NUT – HEX FLG CTR LK M16 X 2-10-AA1J		
F	184717	WASHER – FLAT REG M16-200HV-AA1J		
G	136300	BOLT – HEX FLG HD TFL M8 X 1.25 X 20-8.8-AA3L		
H	135799	NUT – HEX FLG CTR LOC M10 X 1.5-10		
J	21572	BOLT – HEX HD 1/4 20 X 0.625 GR5 AA1J		
K	135248	NUT – HEX FLG CTR LOC		
L	135785	BOLT – RHSN M10 X 1.5 X 25-8.8-AA1J		
M	320190	SCREW – TORX TRUSS HD M8 X 1.25 X 20-SPCL-8.8-ZINC		
N	252179	RIVNUT – M8 X 1.25 HEX 0.7-3.8		

139 (Option) Sunflower Attachment – Base Kit – Pans and Supports

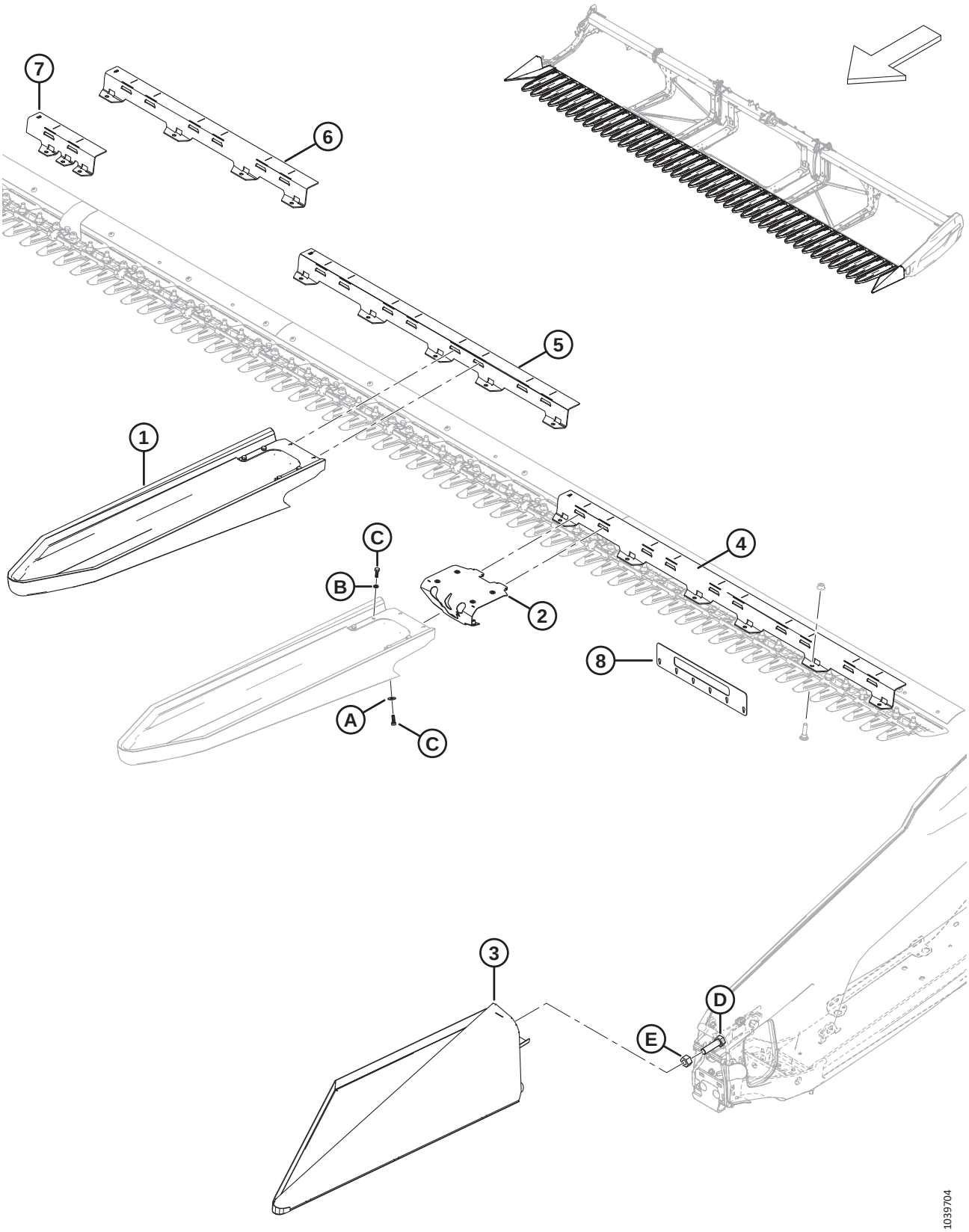

(OPTION) SUNFLOWER ATTACHMENT – BASE KIT – PANS AND SUPPORTS

NOTE:

The Sunflower Attachment is compatible with pointed knife guards only.

Ref	Part Number	Description	Qty	Serial Number
	B7302	KIT – SUNFLOWER ATTACHMENT, BASE [571]		
1	119529	PAN – SUNFLOWER QUICK ATTACH [572]	5	
2	119726	ASSEMBLY – PAN LATCH [573]	5	
3	119560	PAN – END LH WELDT	1	
	119565	PAN – END RH WELDT	1	
4	119558	SUPPORT – PAN 5 FT A	2	
5	119653	SUPPORT – PAN 4 FT B	3	
6	119654	SUPPORT – PAN 3 FT C	4	
7	119655	SUPPORT – PAN HINGE D	1	
	119656	SUPPORT – PAN HINGE E	1	
8	119766	TOOL – GUARD TIP CHECK, 2 SERIES	1	
A	184709	WASHER – FLAT LARGE M8-200HV		
B	30716	WASHER – LOCK SPRING M8-CS-1055-1065-AA1J		
C	184652	BOLT – HEX HD TFL M8 X 1.25 X 25-8.8-AA1J		
D	136339	BOLT – HEX HD FINE TFL M20 X 1.5 X 70 X 8.8-ZINC		
E	136342	NUT – HEX FINE M20 X 1.5 X 10-AA3L		

571. Base kit B7302 includes all parts listed in this section and Section *138 (Option) Sunflower Attachment – Base Kit – Lean Bar and Deflectors, page 367*. Kits are available through Whole Goods only.
572. Includes latch assembly (MD #119726), clamp (NSS), six bolts (MD #184652), four lock spring washers (MD #30716), and two flat washers (MD #184709).
573. Includes six rivnuts (MD #252179).

140 (Option) Sunflower Attachment – Deflector Kits (Double Reel)

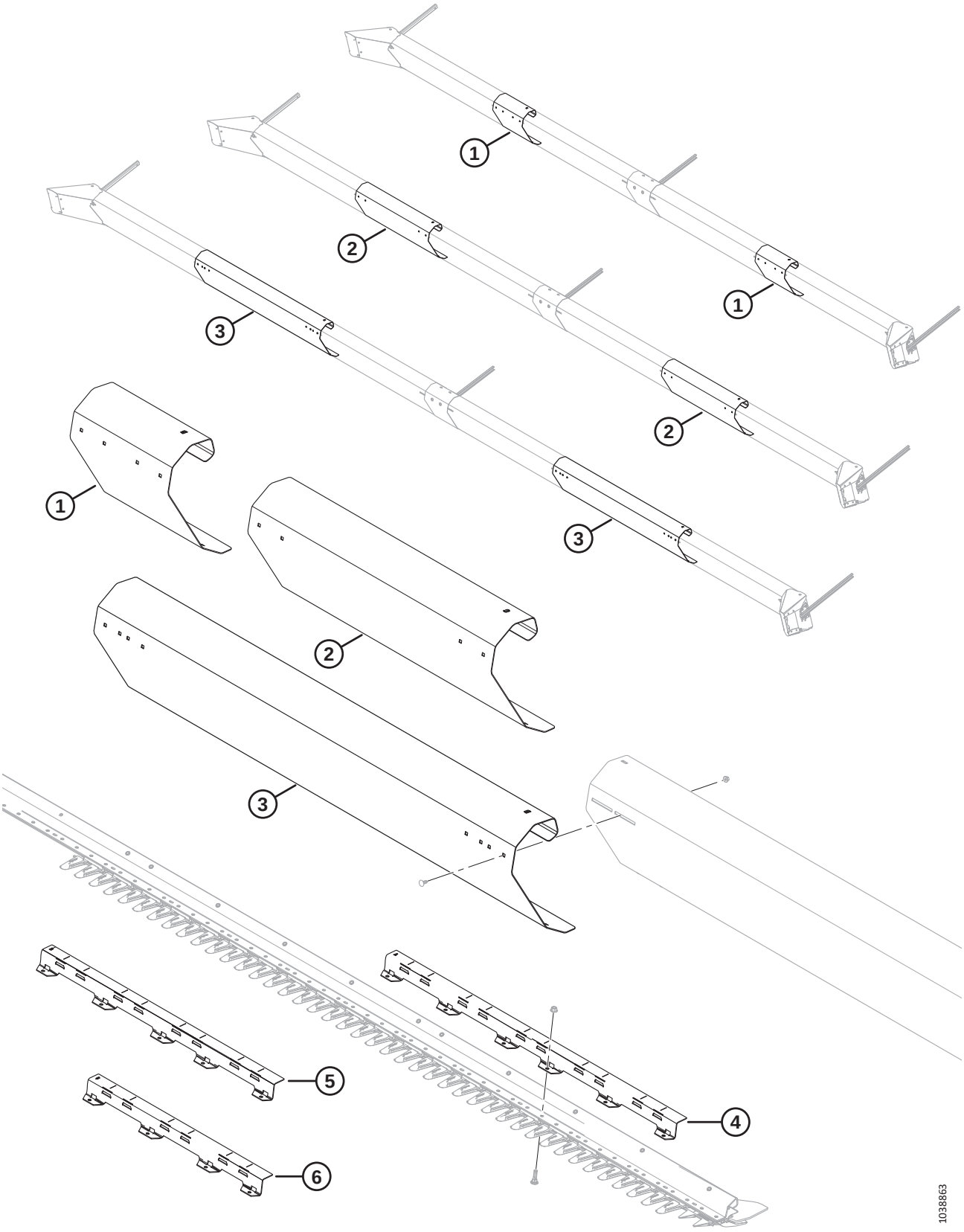

(OPTION) SUNFLOWER ATTACHMENT – DEFLECTOR KITS (DOUBLE REEL)

NOTE:

The Sunflower Attachment is compatible with pointed knife guards only.

Ref	Part Number	Description	Qty	Serial Number
	B7304	KIT – SUNFLOWER DEFLECTOR 30 FT [574]		
	B7305	KIT – SUNFLOWER DEFLECTOR 35 FT [574]		
	B7306	KIT – SUNFLOWER DEFLECTOR 40/41 FT DR [574]		
1	119692	DEFLECTOR – LEAN BAR B [575]	2	
2	119693	DEFLECTOR – LEAN BAR C [576]	2	
3	119694	DEFLECTOR – LEAN BAR D [577]	2	
4	119558	SUPPORT – PAN A (5 FT) [577]	2	
5	119653	SUPPORT – PAN B (4 FT) [577]	1	
6	119654	SUPPORT – PAN C (3 FT) [576]	3	

574. Kits are available through Whole Goods only.
575. Included in B7304 (FD230 headers).
576. Included in B7305 (FD235 headers).
577. Included in B7306 (FD240/FD241 double-reel headers).

141 (Option) Sunflower Attachment – Deflector Kits (Triple Reel)

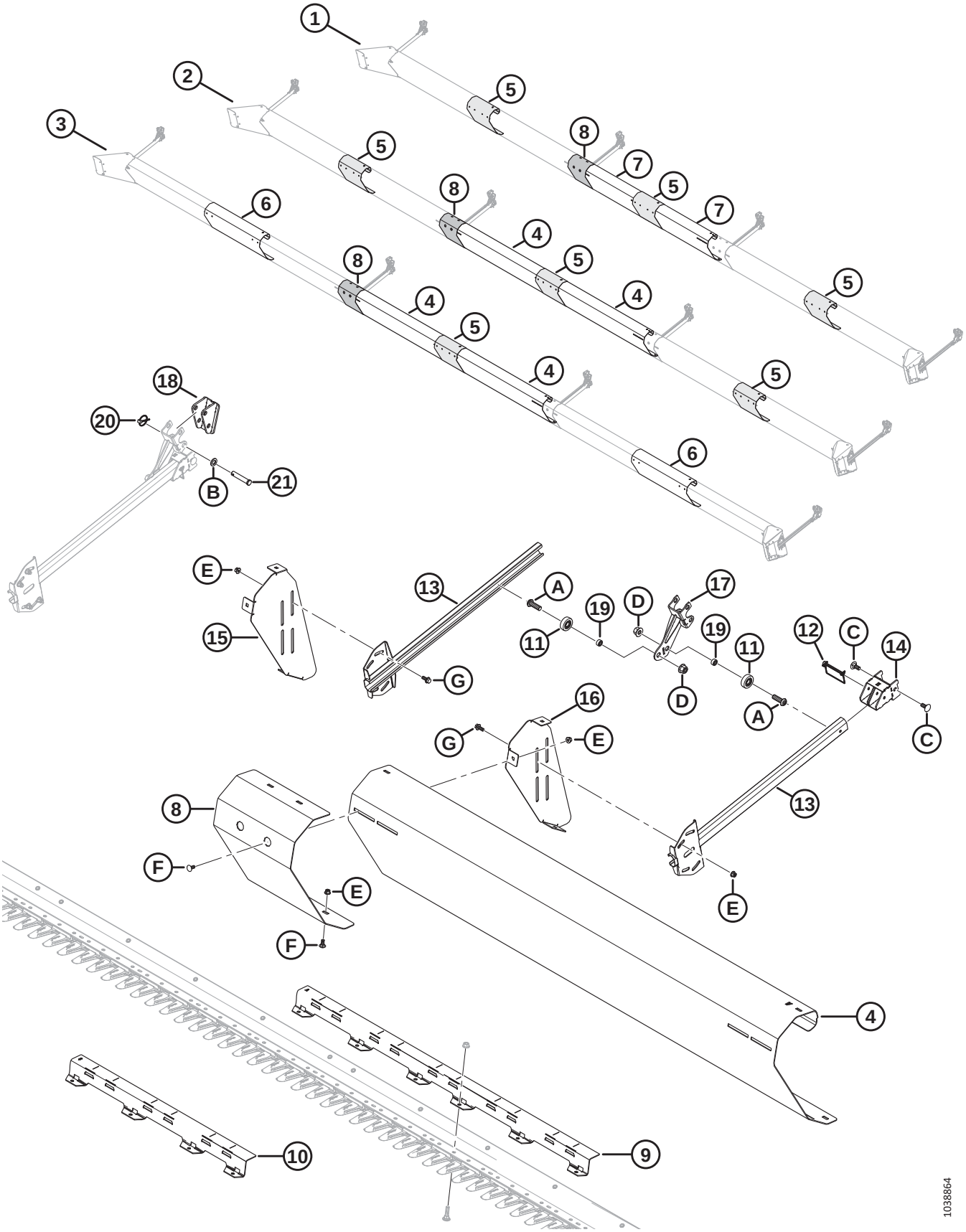

(OPTION) SUNFLOWER ATTACHMENT – DEFLECTOR KITS (TRIPLE REEL)

NOTE:

The Sunflower Attachment is compatible with pointed knife guards only.

Ref	Part Number	Description	Qty	Serial Number
	B7395	KIT – SUNFLOWER DEFLECTOR 40 FT TR [578]		
	B7307	KIT – SUNFLOWER DEFLECTOR 45 FT [578]		
	B7396	KIT – SUNFLOWER DEFLECTOR 50 FT [578]		
1	REF	FD240 TR CONFIGURATION		
2	REF	FD245 TR CONFIGURATION		
3	REF	FD250 TR CONFIGURATION		
4	119691	DEFLECTOR – LEAN BAR A [579]		
5	119692	DEFLECTOR – LEAN BAR B [580]		
6	119693	DEFLECTOR – LEAN BAR C [581]		
7	119745	DEFLECTOR – LEAN BAR E [582]		
8	119725	DEFLECTOR – LEAN BAR FILLER	1	
9	119558	SUPPORT – PAN A (5 FT) [583]		
10	119654	SUPPORT – PAN C (3 FT) [584]	3	
11	273524	BEARING – CAM FOLLOWER	2	
12	136749	PIN – LYNCH	1	
13	119757	ARM – PUSH BAR WELDT	2	
14	119738	BRACKET – WELDT	1	
15	119697	BRACKET – LEAN BAR MOUNT RH	1	
16	119696	BRACKET – LEAN BAR MOUNT LH	1	
17	119672	SUPPORT – LEAN BAR WELDT	1	
18	119593	SUPPORT – LEAN BAR WELDT	1	
19	101095	SPACER	2	
20	102264	PIN – LYNCH 3/16 X 1 9/16 IN.	2	
21	18624	PIN – CLEVIS	2	
A	320441	SCREW – HEX SOC BTN HD M16 X 2.0 X 50-10.9-AA1J		
B	184717	WASHER – FLAT REG M16-200HV-AA1J		
C	184667	BOLT – RHSN M12 X 1.75 X 30-8.8-ZINC		

578. Kits are available through Whole Goods only.
579. Quantities: B7307 (FD245 headers) = 2; B7396 (FD250 headers) = 2.
580. Quantities: B7395 (FD240 headers) = 3; B7307 (FD245 headers) = 3; B7396 (FD250 headers) = 1.
581. Quantities: B7396 (FD250 headers) = 2.
582. Quantities: B7395 (FD240 headers) = 2.
583. Quantities: B7395 (FD240 headers) = 2; B7307 (FD245 headers) = 2; B7396 (FD250 headers) = 4.
584. Quantities: B7307 (FD245 headers) = 3.

(OPTION) SUNFLOWER ATTACHMENT – DEFLECTOR KITS (TRIPLE REEL)

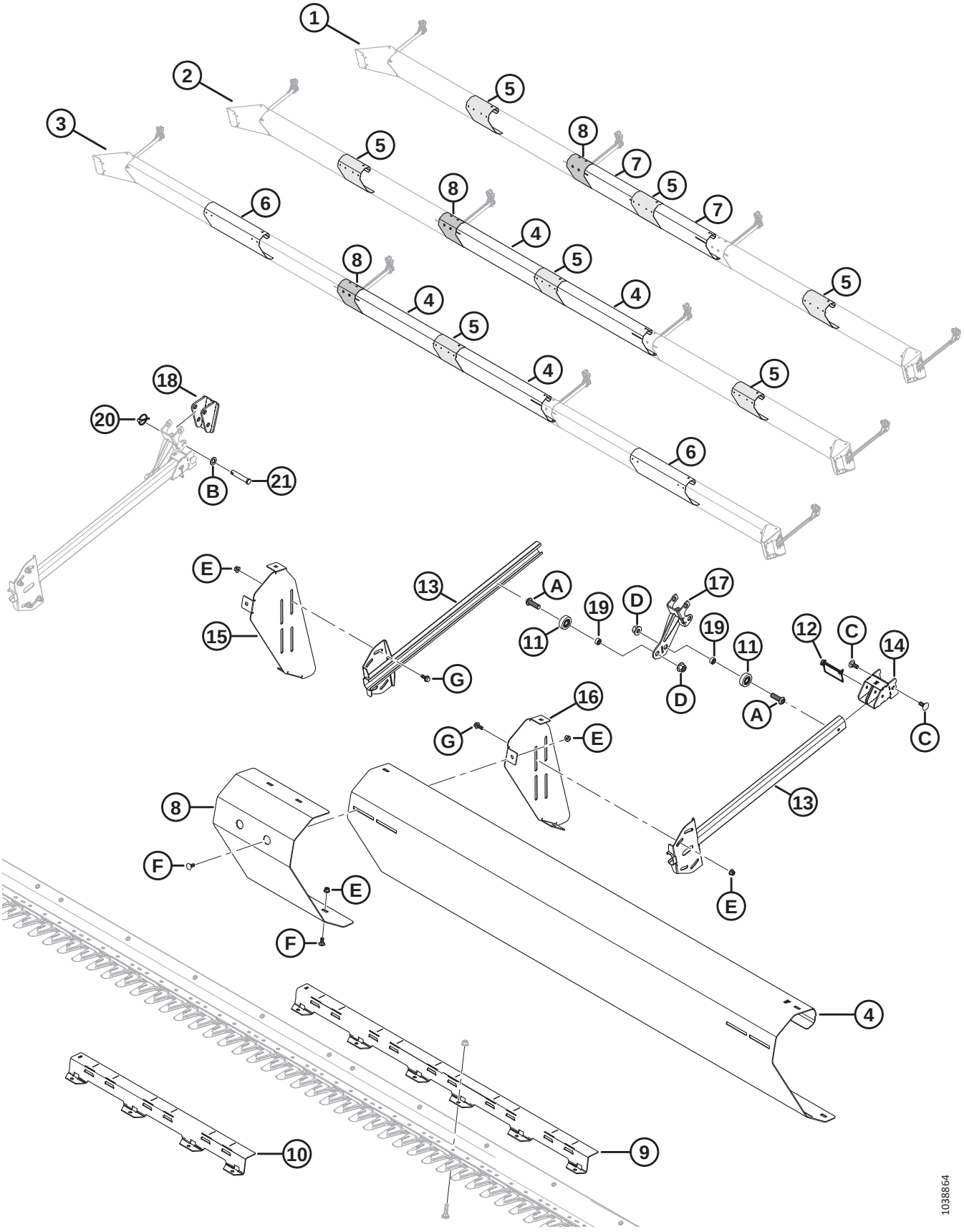

(OPTION) SUNFLOWER ATTACHMENT – DEFLECTOR KITS (TRIPLE REEL)

Ref	Part Number	Description	Qty	Serial Number
D	136440	NUT – HEX FLG CTR LK M16 X 2-10-AA1J		
E	135799	NUT – HEX FLG CTR LOC M10 X 1.5-10		
F	135785	BOLT – RHSN M10 X 1.5 X 25-8.8-AA1J		
G	135783	BOLT – HEX FLG HD TFL M10 X 1.5 X 25-10.9-AA1J		

142 (Option) Sunflower Attachment – Pans

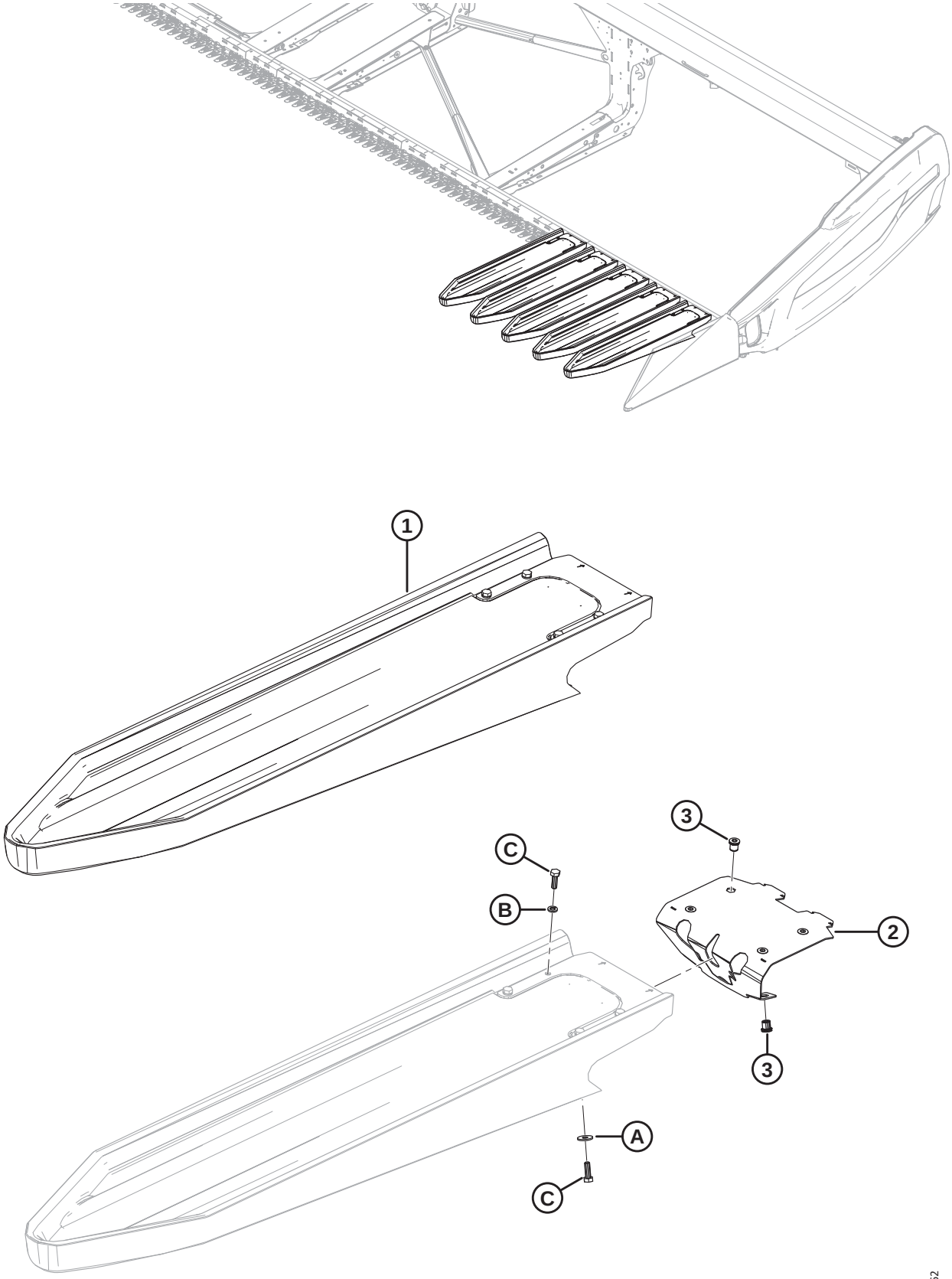

(OPTION) SUNFLOWER ATTACHMENT – PANS

NOTE:

The Sunflower Attachment is compatible with pointed knife guards only.

Ref	Part Number	Description	Qty	Serial Number
	B7303	KIT – 2 SERIES SUNFLOWER PAN (5 PANS) [585]		
	119737	KIT – 2 SERIES SUNFLOWER PAN (5 PANS)		
1	119529	PAN – SUNFLOWER QUICK ATTACH [586]	5	
2	119726	ASSEMBLY – PAN LATCH [587]	5	
3	252179	RIVNUT – M8 X 1.25 HEX0.7-3.8	30	
A	184709	WASHER – FLAT LARGE M8-200HV		
B	30716	WASHER – LOCK SPRING M8-CS-1055-1065-AA1J		
C	184652	BOLT – HEX HD TFL M8 X 1.25 X 25-8.8-AA1J		

585. Kit contains 5 pans. Base kit (B7302) contains pans for FD230 header. FD235 requires 1 pan kit, FD240/FD241 requires 2 pan kits, FD245 requires 3 pan kits, and FD250 requires 4 pan kits. Kits are available through Whole Goods only.
586. Includes latch assembly (MD #119726), clamp (NSS), six bolts (MD #184652), four lock spring washers (MD #30716), and two flat washers (MD #184709).
587. Includes six rivnuts (MD #252179).

143 (Option) Upper Cross Auger – Two-Piece Auger (FD225, FD230, FD235, and FD241)

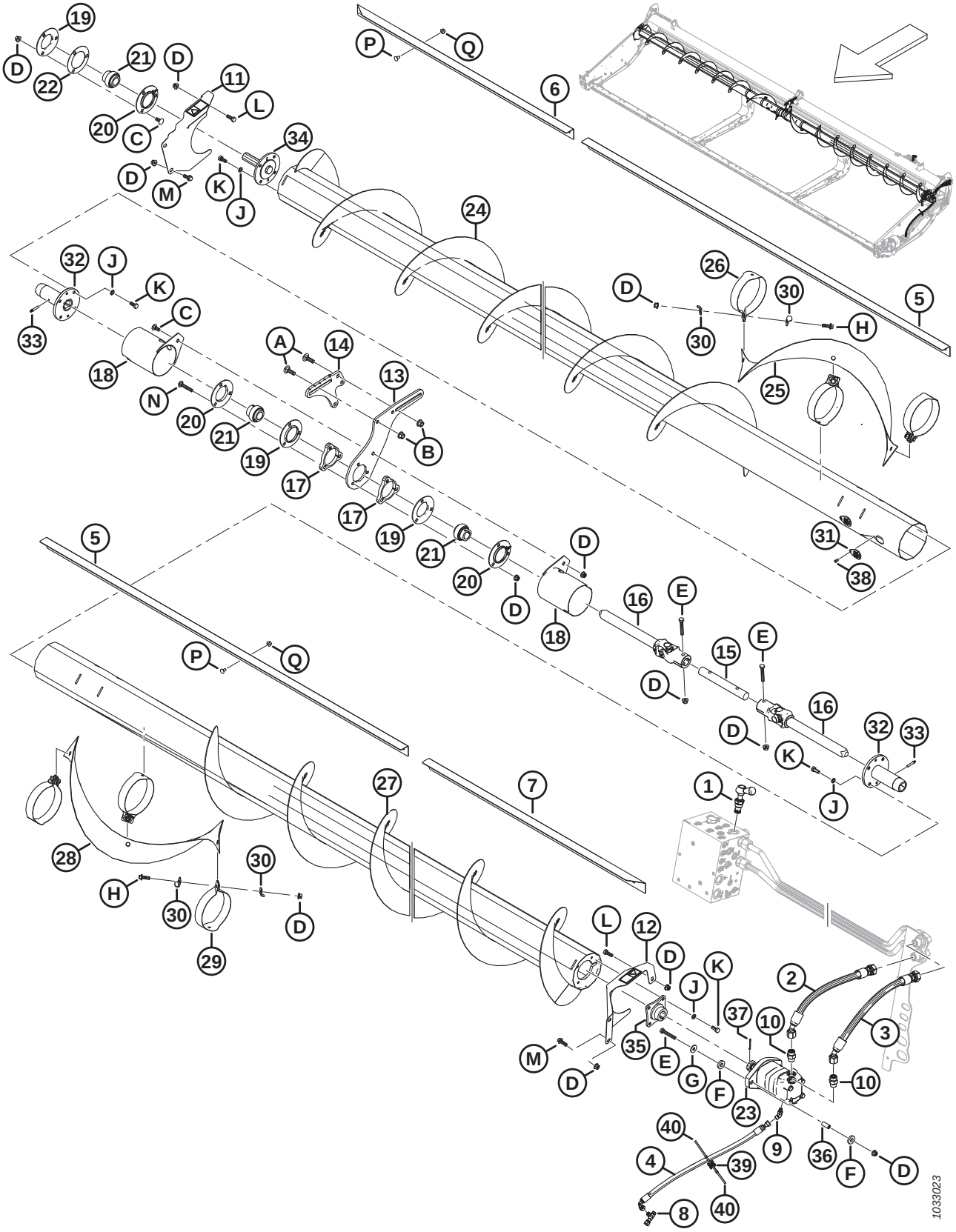

(OPTION) UPPER CROSS AUGER – TWO-PIECE AUGER (FD225, FD230, FD235, AND FD241)

Ref	Part Number	Description	Qty	Serial Number
	B6413	KIT – FD225 UPPER CROSS AUGER [588]		
	B6414	KIT – FD230 UPPER CROSS AUGER [588]		
	B6415	KIT – FD235 UPPER CROSS AUGER [588]		
	B6416	KIT – FD241 UPPER CROSS AUGER [588]		
1	283571	VALVE – BYPASS	1	
	245158	SEAL KIT		
2	283061	HOSE – HYD	1	
3	283062	HOSE – HYD	1	
4	283077	HOSE – HYD	1	
5	275521	DEFLECTOR – INBOARD 30, 35, AND 41 FT [589]	2	
6	275530	DEFLECTOR – 25 FT	1	
	275533	DEFLECTOR – RH OUTBOARD 30 FT	1	
	275543	DEFLECTOR – RH OUTBOARD 35 FT	1	
	275614	DEFLECTOR – RH OUTBOARD 41 FT	1	
7	275530	DEFLECTOR – 25 FT	1	
	275532	DEFLECTOR – LH OUTBOARD 30 FT	1	
	275542	DEFLECTOR – LH OUTBOARD 35 FT	1	
	275524	DEFLECTOR – LH OUTBOARD 41 FT	1	
8	252621	FITTING – TEE HYD	1	
	135957	O-RING – Ø1.78 X Ø7.65		
9	252307	FITTING – ELBOW 45° HYD	1	
	50223	O-RING – Ø1.83 X Ø8.92		
	135957	O-RING – Ø1.78 X Ø7.65		
10	184461	FITTING – ADAPTER HYD	2	
	44210	O-RING – Ø2.46 X Ø19.18		
	135867	O-RING – Ø1.78 X Ø15.60		
11	233725	SHIELD – ASSEMBLY RH C/W DECAL	1	
12	233724	SHIELD – ASSEMBLY LH C/W DECAL	1	
13	233738	PLATE – SUPPORT, CENTER SLIDING	1	
14	233736	PLATE – SUPPORT, CENTER FIXED	1	
15	233519	SHAFT	1	
16	233513	JOINT – UNIVERSAL	2	
17	233450	PLATE – SPACER	2	
18	233371	GUARD – WELDT	2	
19	49306	FLANGE	3	

588. Kits are available through Whole Goods only.
589. Inboard deflectors (MD #275521) are not used on FD225 headers.

(OPTION) UPPER CROSS AUGER – TWO-PIECE AUGER (FD225, FD230, FD235, AND FD241)

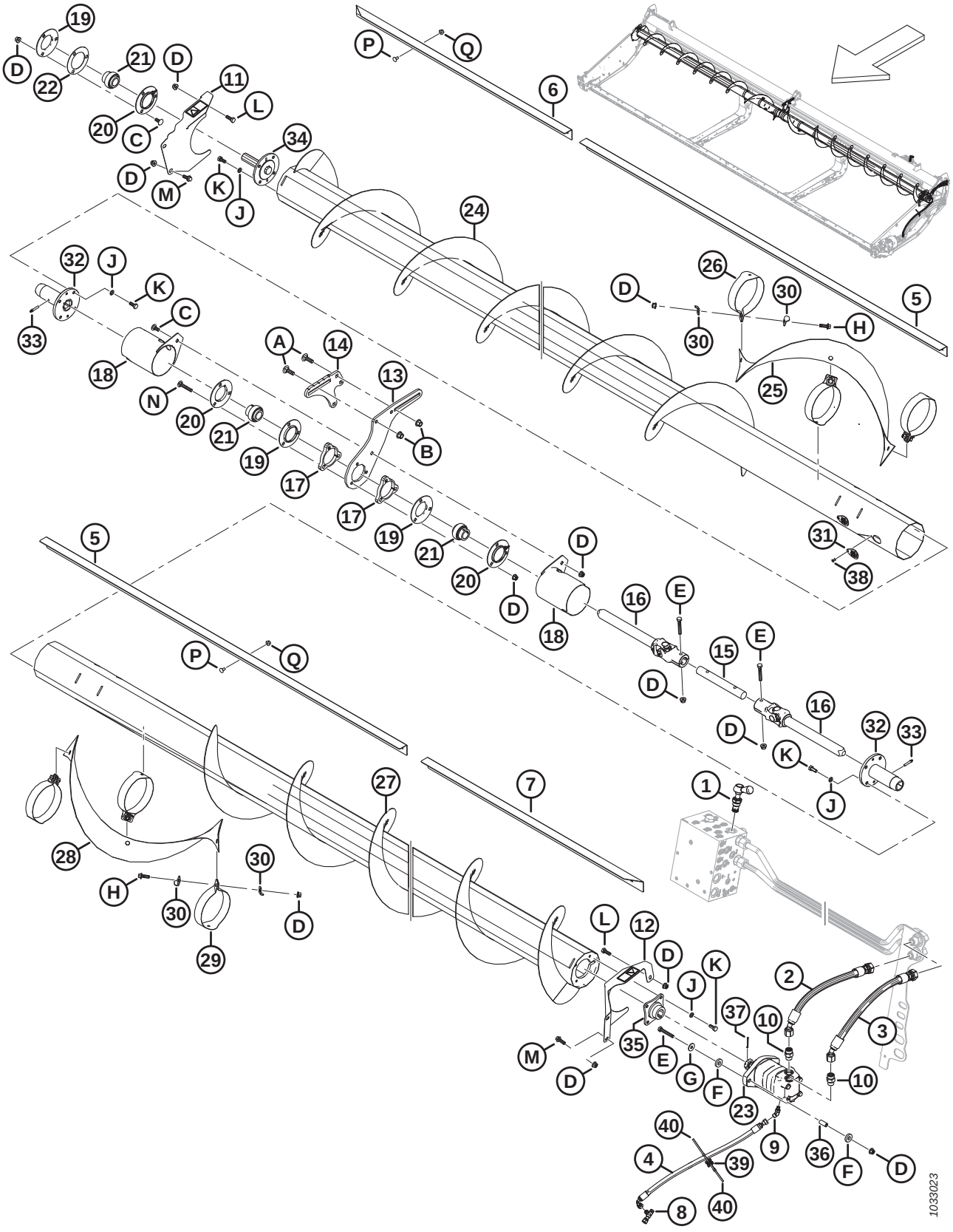

(OPTION) UPPER CROSS AUGER – TWO-PIECE AUGER (FD225, FD230, FD235, AND FD241)

Ref	Part Number	Description	Qty	Serial Number
20	30661	FLANGE	3	
21	21859	BEARING – SPH OD EXT INNER RACE 1 3/16 BORE	3	
22	172340	SHIM	1	
23	283555	MOTOR – HYD-100 CC SAE B	1	
	174304	SEAL KIT – EATON 2000 MOTOR		
	137375	NUT – SLTD JAM 1.0-20 UNEF		
24	233654	AUGER – WELDT RH (FD225) [590]	1	
	233656	AUGER – WELDT RH (FD230) [591]	1	
	233658	AUGER – WELDT RH (FD235) [592]	1	
	233660	AUGER – WELDT RH (FD241) [593]	1	
25	233705	FLIGHTING – RH	1	
26	233621	STRAP – RH	3	
27	233655	AUGER – WELDT LH (FD225) [590]	1	
	233657	AUGER – WELDT LH (FD230) [591]	1	
	233659	AUGER – WELDT LH (FD235) [592]	1	
	233661	AUGER – WELDT LH (FD241) [593]	1	
28	233706	FLIGHTING – LH	1	
29	233622	STRAP – LH	3	
30	233623	PLATE	12	
31	233625	COVER	4	
32	233514	HUB – WELDT UCA SLIDING	2	
33	30934	FITTING – 1/4-28 TAPER THD (LUBRICATION)	2	
34	233447	HUB – MACHINED	1	
35	233443	HUB – WELDT, UCA 1.25 TAPER SHAFT	1	
36	233445	SPACER	2	
37	18606	PIN – COTTER 1/8 DIA X 1.5 ZP	1	
38	18768	RIVET – BLIND Ø0.188 IN. X 0.251 TO 0.375 GRIP RANGE	4	
39	134442	SPACER – DUAL SWIVEL SADDLE	1	
40	21763	FASTENER – CABLE TIE, BLACK	2	
A	135900	BOLT – RHSN TFL M12 X 1.75 X 40-8.8-ZINC		
B	136431	NUT – HEX FLG CTR LOC M12 X 1.75-10		
C	135785	BOLT – RHSN M10 X 1.5 X 25-8.8-AA1J		
D	135799	NUT – HEX FLG CTR LOC M10 X 1.5-10		

590. Used for FD225 headers.
591. Used for FD230 headers.
592. Used for FD235 headers.
593. Used for FD241 headers.

(OPTION) UPPER CROSS AUGER – TWO-PIECE AUGER (FD225, FD230, FD235, AND FD241)

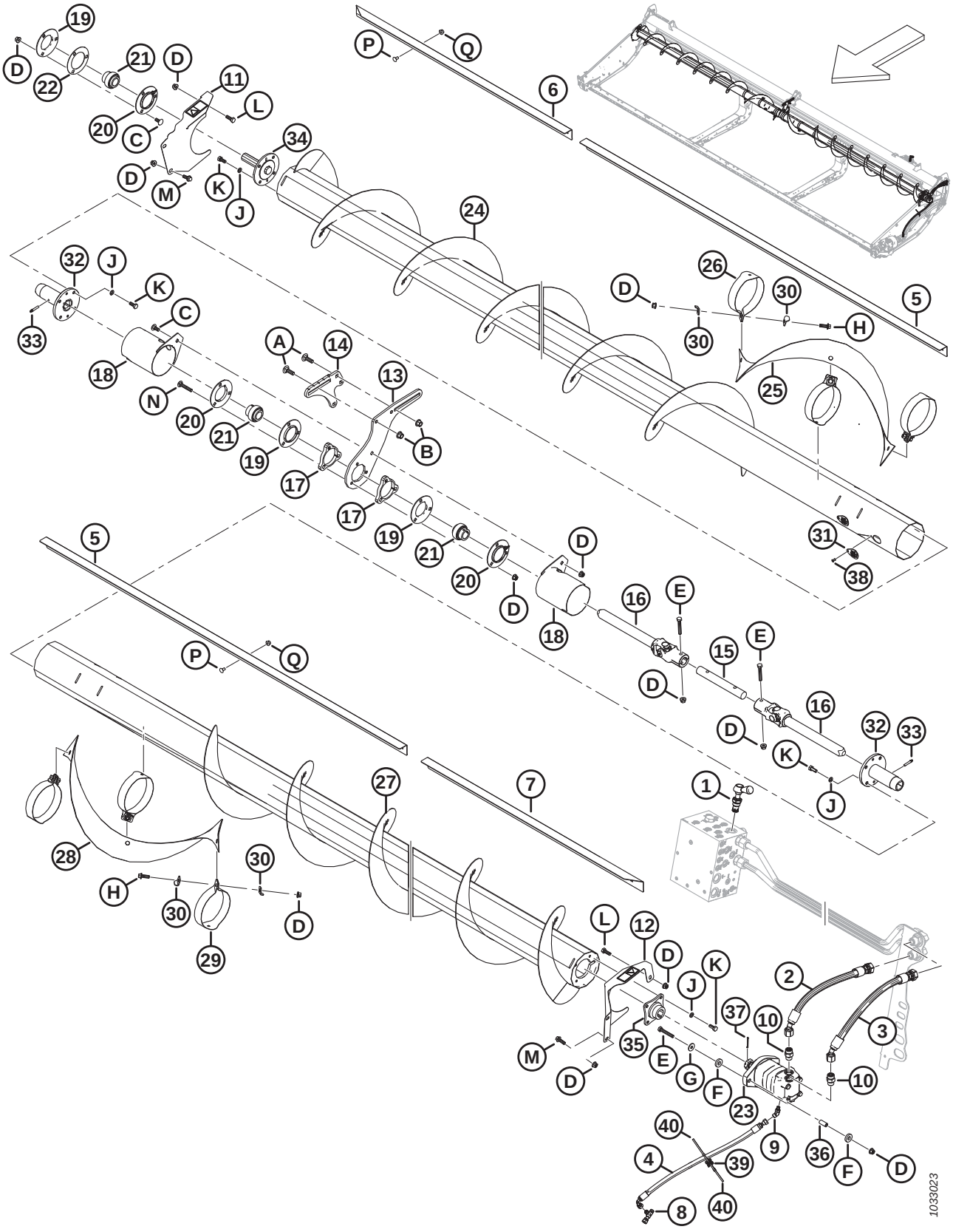

(OPTION) UPPER CROSS AUGER – TWO-PIECE AUGER (FD225, FD230, FD235, AND FD241)

Ref	Part Number	Description	Qty	Serial Number
E	108172	BOLT – HEX HD M10 X 1.5 X 65-8.8-AA1J		
F	233446	WASHER – RUBBER		
G	184712	WASHER – FLAT LARGE M10-200HV		
H	184665	BOLT – HEX FLG HD M10 X 1.5 X 30-10.9-AA1J		
J	30632	WASHER – LOCK SPRING M10		
K	30627	BOLT – HEX HD TFL M10 X 1.5 X 25-8.8-A3L		
L	184661	BOLT – HEX HD TFL M10 X 1.5 X 30-8.8-AA1J		
M	184665	BOLT – HEX FLG HD M10 X 1.5 X 30-10.9-AA1J		
N	136113	BOLT – RHSN M10 X 1.5 X 60-8.8-AA1J		
P	191489	BOLT – RHSSN TFL M8 X 1.25 X 16-8.8-AA1J		
Q	135337	NUT – HEX FLG CTR LK M8 X 1.25-8-AA1J		

144 (Option) Upper Cross Auger – Three-Piece Auger (FD240, FD245, and FD250)

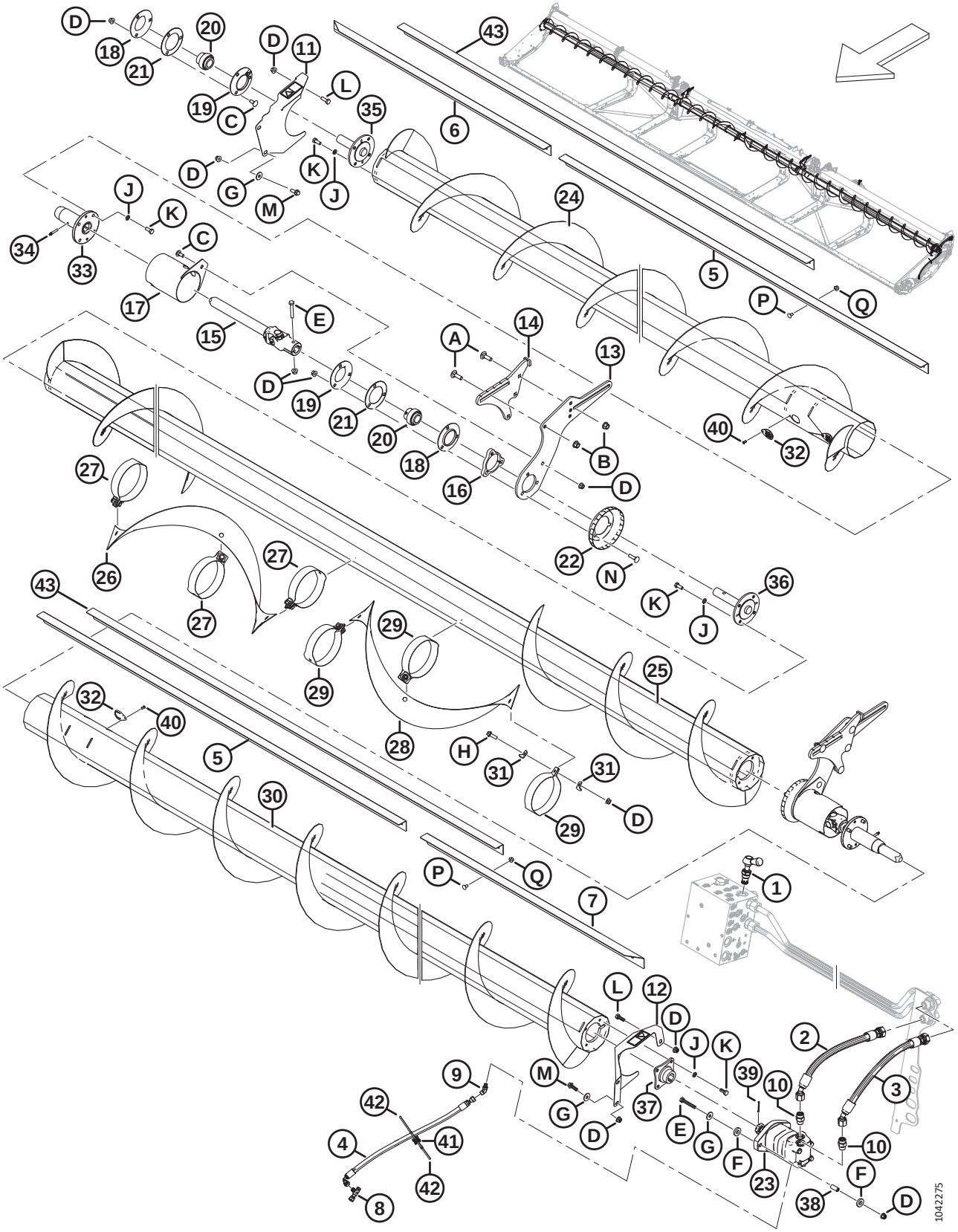

(OPTION) UPPER CROSS AUGER – THREE-PIECE AUGER (FD240, FD245, AND FD250)

Ref	Part Number	Description	Qty	Serial Number
	B6417	KIT – FD240 UPPER CROSS AUGER [594]		
	B6418	KIT – FD245 UPPER CROSS AUGER [594]		
	B6419	KIT – FD250 UPPER CROSS AUGER [594]		
1	283571	VALVE – BYPASS	1	
	245158	SEAL KIT		
2	283061	HOSE – HYD	1	
3	283062	HOSE – HYD	1	
4	283077	HOSE – HYD	1	
5	275521	DEFLECTOR – INBOARD 40 FT	2	
	275692	DEFLECTOR – INBOARD 45 AND 50 FT	2	
6	275625	DEFLECTOR – RH OUTBOARD 40 AND 50 FT	1	
	275543	DEFLECTOR – RH OUTBOARD 45 FT	1	
7	275624	DEFLECTOR – LH OUTBOARD 40 AND 50 FT	1	
	275542	DEFLECTOR – LH OUTBOARD 45 FT	1	
8	252621	FITTING – TEE HYD	1	
	135957	O-RING – Ø1.78 X Ø7.65		
9	252307	FITTING – ELBOW 45° HYD	1	
	50223	O-RING – Ø1.83 X Ø8.92		
	135957	O-RING – Ø1.78 X Ø7.65		
10	184461	FITTING – ADAPTER HYD	2	
	44210	O-RING – Ø2.46 X Ø19.18		
	135867	O-RING – Ø1.78 X Ø15.60		
11	233725	SHIELD – ASSEMBLY RH C/W DECAL	1	
12	233724	SHIELD – ASSEMBLY LH C/W DECAL	1	
13	233741	PLATE – SUPPORT, CENTER SLIDING	2	
14	233740	SUPPORT – WELDMENT, CENTER FIXED	2	
15	233513	JOINT – UNIVERSAL	2	
16	233450	PLATE – SPACER	2	
17	233371	GUARD – WELDT	2	
18	49306	FLANGE	2	
19	30661	FLANGE	2	
20	21859	BEARING – SPH OD EXT INNER RACE 1 3/16 BORE	3	
21	172340	SHIM	2	
22	233552	SHIELD – FORMED	2	

594. Kits are available through Whole Goods only.

(OPTION) UPPER CROSS AUGER – THREE-PIECE AUGER (FD240, FD245, AND FD250)

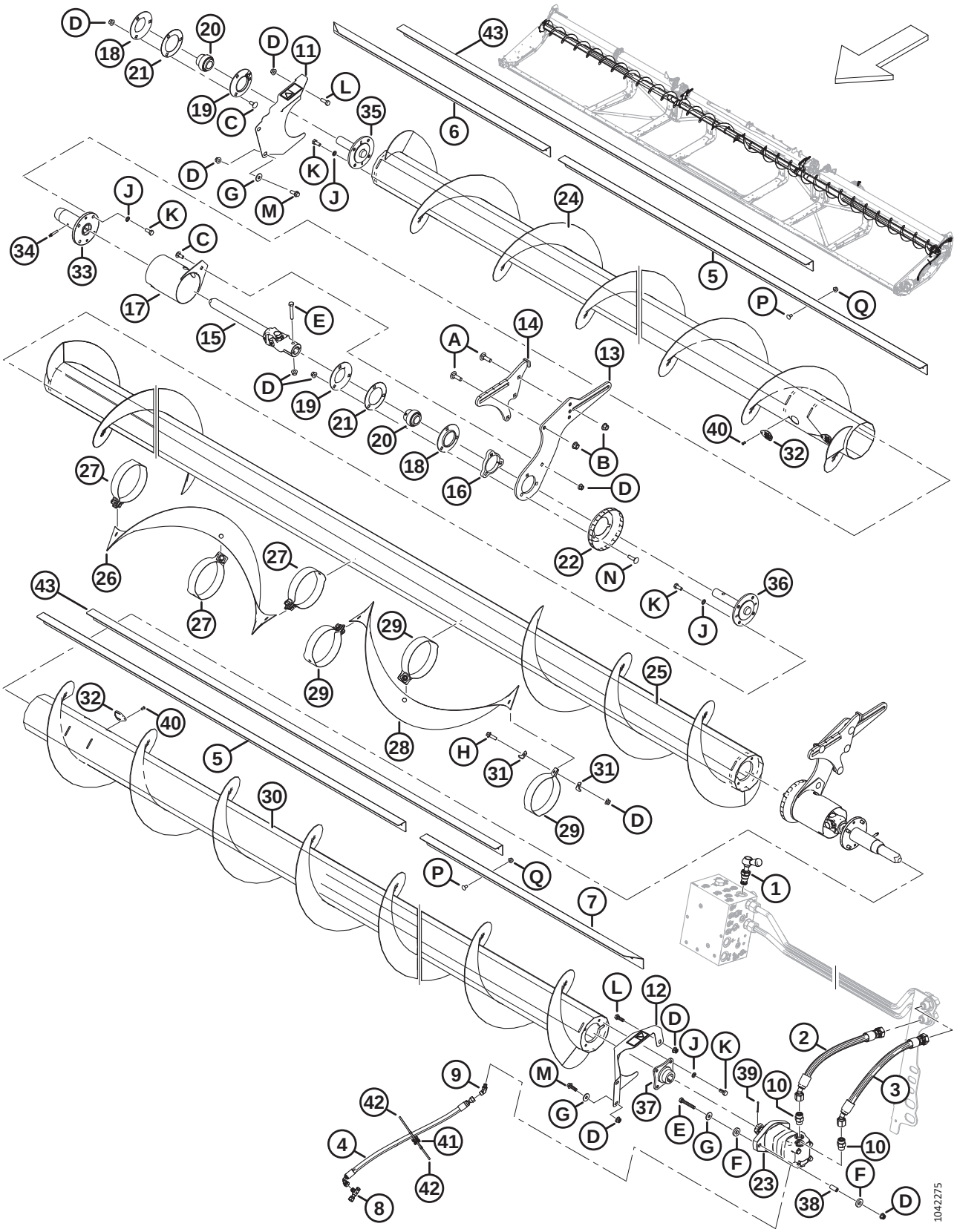

(OPTION) UPPER CROSS AUGER – THREE-PIECE AUGER (FD240, FD245, AND FD250)

Ref	Part Number	Description	Qty	Serial Number
23	283555	MOTOR – HYD-100 CC SAE B	1	
	174304	SEAL KIT – EATON 2000 MOTOR		
	137375	NUT – SLTD JAM 1.0-20 UNEF		
24	233662	AUGER – WELDT RH (FD240 AND FD245) [595]	1	
	233664	AUGER – WELDT RH (FD250) [596]	1	
25	233668	AUGER – WELDT CENTER (FD240) [597]	1	
	233669	AUGER – WELDT CENTER (FD245 AND FD250) [598]	1	
26	233705	FLIGHTING – RH	1	
27	233621	STRAP – RH	3	
28	233706	FLIGHTING – LH	1	
29	233622	STRAP – LH	3	
30	233663	AUGER – WELDT LH (FD240 AND FD245) [595]	1	
	233665	AUGER – WELDT LH (FD250) [596]	1	
31	233623	PLATE	12	
32	233625	COVER	4	
33	233514	HUB – WELDT, UCA SLIDING	2	
34	30934	FITTING – 1/4-28 TAPER THD (LUBRICATION)	2	
35	233447	HUB – MACHINED, UCA IDLE END	1	
36	233516	HUB – MACHINED, UCA CENTER	2	
37	233443	HUB – WELDT, UCA 1.25 TAPER SFAFT	1	
38	233445	SPACER	2	
39	18606	PIN – COTTER 1/8 DIA X 1.5 ZP	1	
40	18768	RIVET – BLIND Ø0.188 IN. X 0.251 TO 0.375 GRIP RANGE	4	
41	134442	SPACER – DUAL SWIVEL SADDLE	1	
42	21763	FASTENER – CABLE TIE, BLACK	2	
43	275691	DEFLECTOR – MIDDLE 45 AND 50 FT [599]	2	
A	135900	BOLT – RHSN TFL M12 X 1.75 X 40-8.8-ZINC		
B	136431	NUT – HEX FLG CTR LOC M12 X 1.75-10		
C	135785	BOLT – RHSN M10 X 1.5 X 25-8.8-AA1J		
D	135799	NUT – HEX FLG CTR LOC M10 X 1.5-10		
E	108172	BOLT – HEX HD M10 X 1.5 X 65-8.8-AA1J		

595. Used for FD240 and FD245 headers.
596. Used for FD250 headers.
597. Used for FD240 headers.
598. Used for FD245 and FD250 headers.
599. Middle deflector (MD #275691) is placed between the inboard and outboard deflectors for FD245 and FD250 headers only.

(OPTION) UPPER CROSS AUGER – THREE-PIECE AUGER (FD240, FD245, AND FD250)

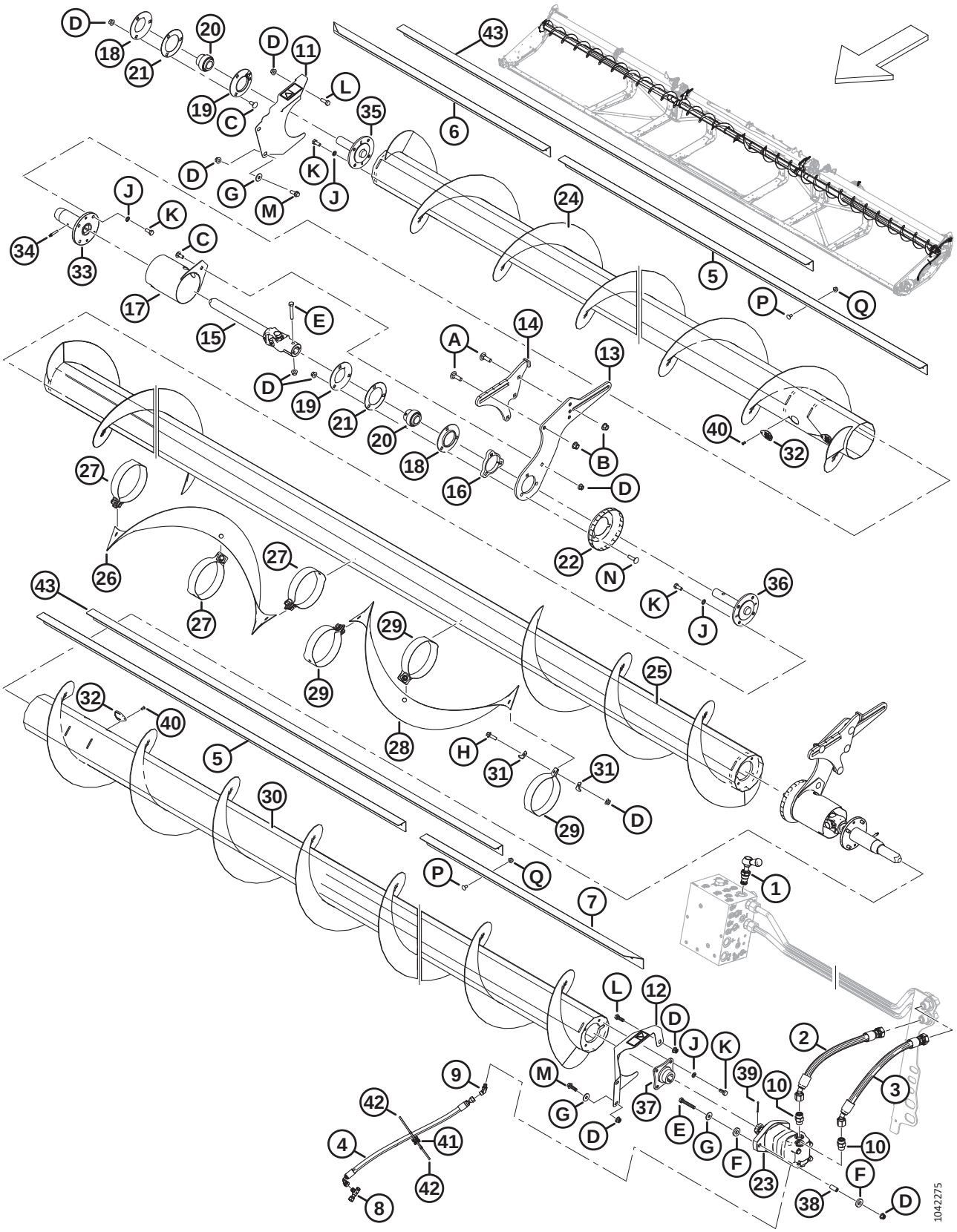

(OPTION) UPPER CROSS AUGER – THREE-PIECE AUGER (FD240, FD245, AND FD250)

Ref	Part Number	Description	Qty	Serial Number
F	233446	WASHER – RUBBER		
G	184712	WASHER – FLAT LARGE M10-200HV		
H	184665	BOLT – HEX FLG HD M10 X 1.5 X 30-10.9-AA1J		
J	30632	WASHER – LOCK SPRING M10		
K	30627	BOLT – HEX HD TFL M10 X 1.5 X 25-8.8-A3L		
L	184661	BOLT – HEX HD TFL M10 X 1.5 X 30-8.8-AA1J		
M	184665	BOLT – HEX FLG HD M10 X 1.5 X 30-10.9-AA1J		
N	152732	BOLT – RHSN M10 X 1.5 X 40-8.8-AA1J		
P	191489	BOLT – RHSSN TFL M8 X 1.25 X 16-8.8-AA1J		
Q	135337	NUT – HEX FLG CTR LK M8 X 1.25-8-AA1J		

145 (Option) VertiBlade™ Vertical Knife Kit

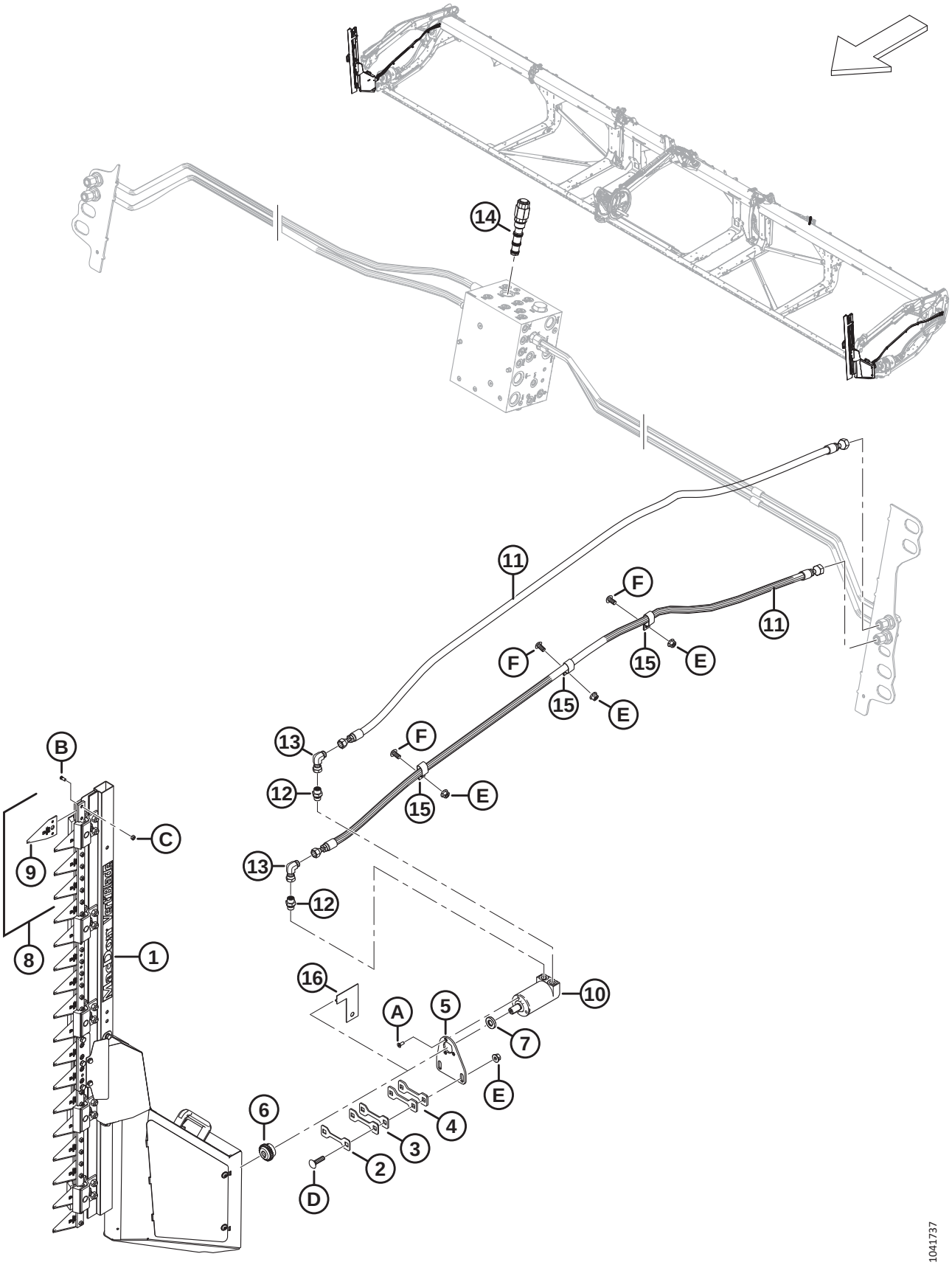

(OPTION) VERTIBLADE™ VERTICAL KNIFE KIT

Ref	Part Number	Description	Qty	Serial Number
	B7029	KIT – VERTIBLADE VERTICAL KNIVES [600]		
	B7464	KIT – VERTICAL KNIFE COMPONENTS [601]		
	B7466	KIT – VERTICAL KNIFE [602]		
1	313502	KNIFE – VERTICAL ASSEMBLY, RH [603]	1	
	313501	KNIFE – VERTICAL ASSEMBLY, LH [603]	1	
2	313750	SHIM – 2 MM THK	A/R	
3	313749	SHIM – 3 MM THK	A/R	
4	313745	SHIM – 4.5 MM THK	A/R	
5	313744	SUPPORT – MOTOR VERTICAL KNIFE	2	
6	313808	HUB	2	
7	313801	SPACER	2	
8	313797	KIT – VERTICAL KNIFE SECTIONS [604]	A/R	
9	313788	SECTION – VERTICAL KNIFE	A/R	
10	304611	MOTOR – HYDRAULIC	2	
11	283066	HOSE – HYD	4	
12	136653	FITTING – ADAPTER	4	
	135865	O-RING – Ø1.78 X Ø9.25		
	136654	O-RING – 1.50 X 2.10 X 14.70		
13	136249	FITTING – ELBOW 90° HYD	4	
14	283008	VALVE – PRIORITY FLOW REG (FRRV) [605]	1	
	283579	SEAL KIT		
15	135235	CLAMP – DOUBLE HOSE INSULATED	6	
16	313780	GUIDE – VERTICAL KNIFE [606]	1	

600. Kits are available through Whole Goods only.
601. For European markets. This kit includes everything in base vertical knife kit B7029 less the left and right vertical knives (MD #313501 and 313502), motors (MD #304611), knife sections kit (MD #313797), spacers (MD #313801), and hubs (MD #313808). To complete European vertical knives, order European Vertical Knife kit B7466. Kits are available through Whole Goods only.
602. For European markets. This kit includes the left and right vertical knives (MD #313501 and 313502), motors (MD #304611), knife sections kit (MD #313797), spacers (MD #313801), and hubs (MD #313808) only. To complete European vertical knives, order European Vertical Knife Components kit B7464. Kits are available through Whole Goods only.
603. For vertical knife components, refer to Section *146 (Option) VertiBlade™ Vertical Knife Components, page 397*.
604. The kit includes four vertical knife sections (MD #313788), eight vertical knife section screws (MD #313789), and eight vertical knife section nuts (MD #313790).
605. Connects to port FRRV.
606. The guide is used as a tool to determine the correct number of shims (MD #313750, MD #313749, and MD #313745) required to fill the gap between the frame plate and the guide. The guide is removed after determining the gap. Refer to the installation instructions for more details.

(OPTION) VERTIBLADE™ VERTICAL KNIFE KIT

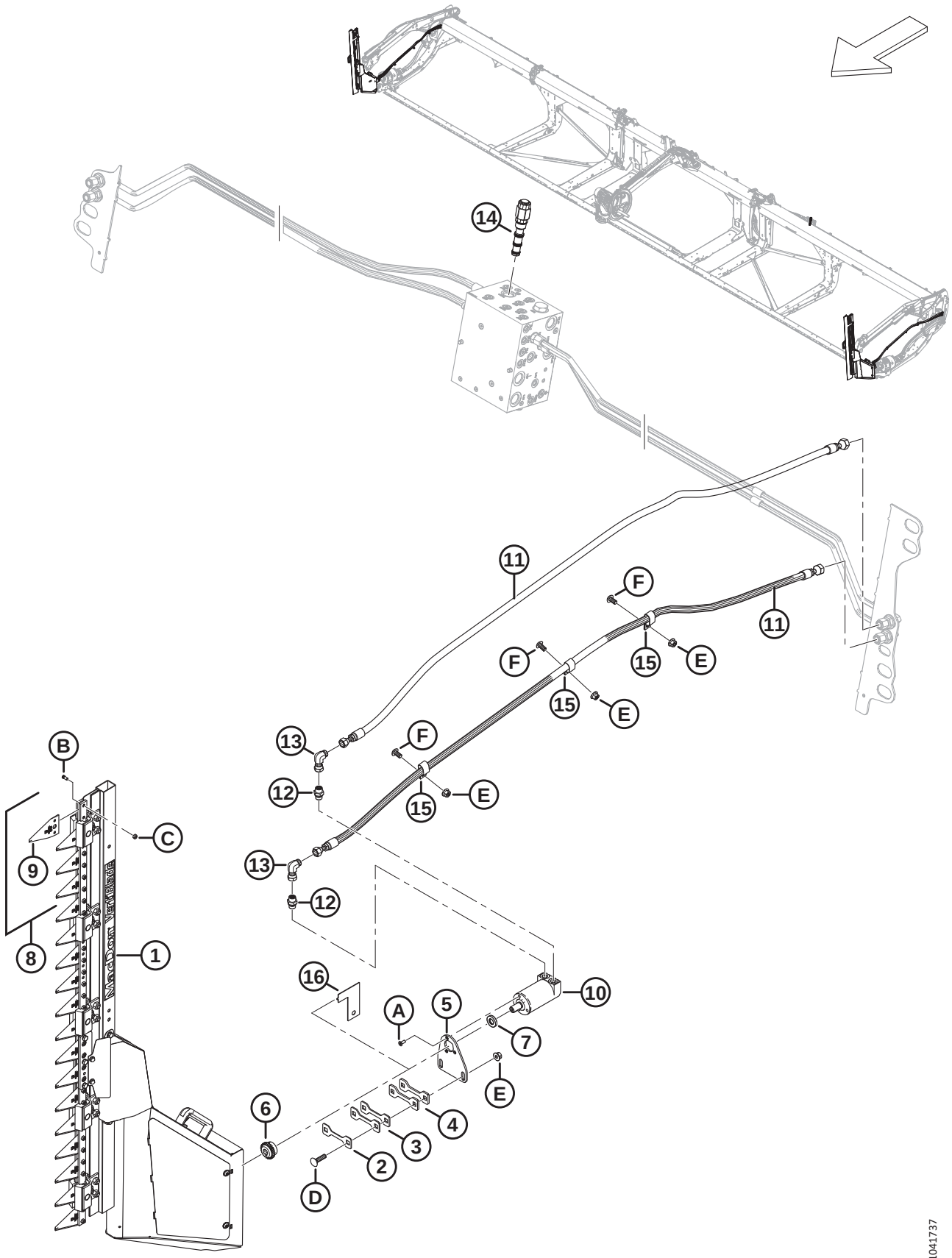

(OPTION) VERTIBLADE™ VERTICAL KNIFE KIT

Ref	Part Number	Description	Qty	Serial Number
A	320220	SCREW – TORX CSK HD TFL M6 X 1 X 16-SPCL-8.8-ZINC		
B	313789	SCREW – VERTICAL KNIFE SECTION		
C	313790	NUT – VERTICAL KNIFE SECTION		
D	152732	BOLT – RHSN M10 X 1.5 X 40-8.8-AA1J		
E	135799	NUT – HEX FLG CTR LOC M10 X 1.5-10		
F	136395	SCREW – TORX TRUSS HD M10 X 1.5 X 20 X SPCL-8.8-A3L		

146 (Option) VertiBlade™ Vertical Knife Components

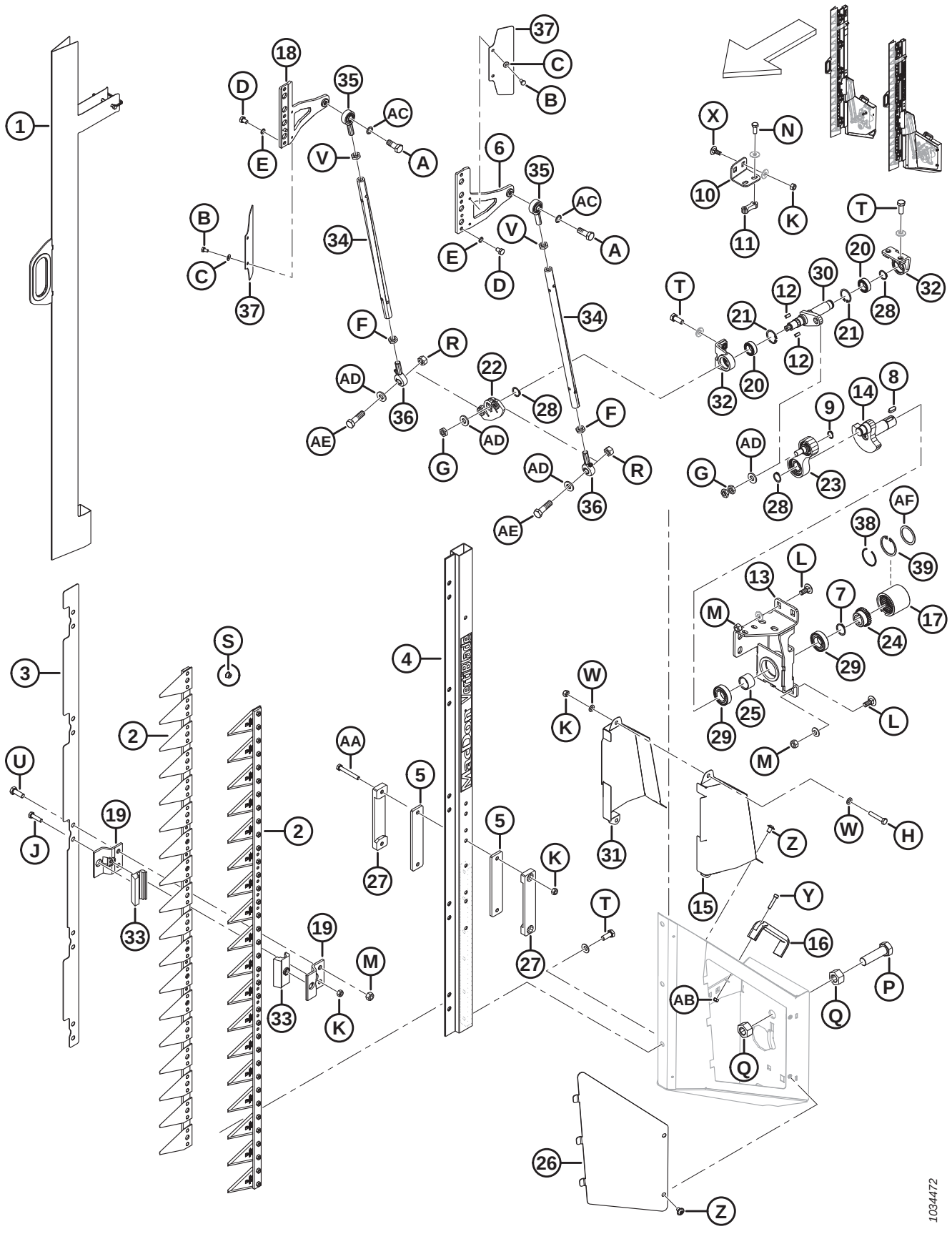

(OPTION) VERTIBLADE™ VERTICAL KNIFE COMPONENTS

Ref	Part Number	Description	Qty	Serial Number
	313501	KNIFE – VERTICAL ASSEMBLY, LH		
	313502	KNIFE – VERTICAL ASSEMBLY, RH		
1	313798	SHIELD – VERTICAL KNIFE	2	
2	313799	KNIFE ASSY – VERTICAL KNIFE	4	
3	313800	PLATE – ADAPTER POSITIONING	2	
4	313802	BAR	2	
5	313805	GUIDE – INNER	4	
6	313807	KNIFEHEAD – LH	2	
7	313810	RING – RETAINING EXTERNAL	2	
8	313815	KEY	2	
9	313819	RING – RETAINING EXTERNAL	2	
10	313882	BRACKET – CRANK DRIVE RH	1	
	313820	BRACKET – CRANK DRIVE LH	1	
11	313821	PLATE – THREADED	2	
12	313824	KEY	4	
13	313884	SUPPORT – RH DRIVE WELDMENT	1	
	313825	SUPPORT – LH DRIVE WELDMENT	1	
14	313828	SHAFT – CRANK	2	
15	313836	COVER – RH KNIFE OUTER	2	
	313835	COVER – LH KNIFE OUTER	2	
16	313841	HANDLE	2	
17	313809	COUPLING	2	
18	313869	KNIFEHEAD – RH	2	
19	313804	GUIDE – KNIFE	20	
20	313817	BEARING – ANGULAR	4	
21	313818	RING – RETAINING INTERNAL	4	
22	313826	ARM – OSCILLATING	2	
23	313827	PITTMAN ASSEMBLY	2	
24	313813	HUB	2	
25	313814	SLEEVE – CRANKSHAFT SPACER	2	
26	313834	COVER – RH SIDE	1	
	313833	COVER – LH SIDE	1	
27	313806	GUIDE – OUTER	4	
28	313811	RING – RETAINING EXTERNAL	6	
29	313812	BEARING	4	
30	313883	SHAFT – DRIVE, RH	1	
	313822	SHAFT – DRIVE, LH	1	
31	313838	COVER – RH KNIFE INNER	1	
	313837	COVER – LH KNIFE INNER	1	

(OPTION) VERTIBLADE™ VERTICAL KNIFE COMPONENTS

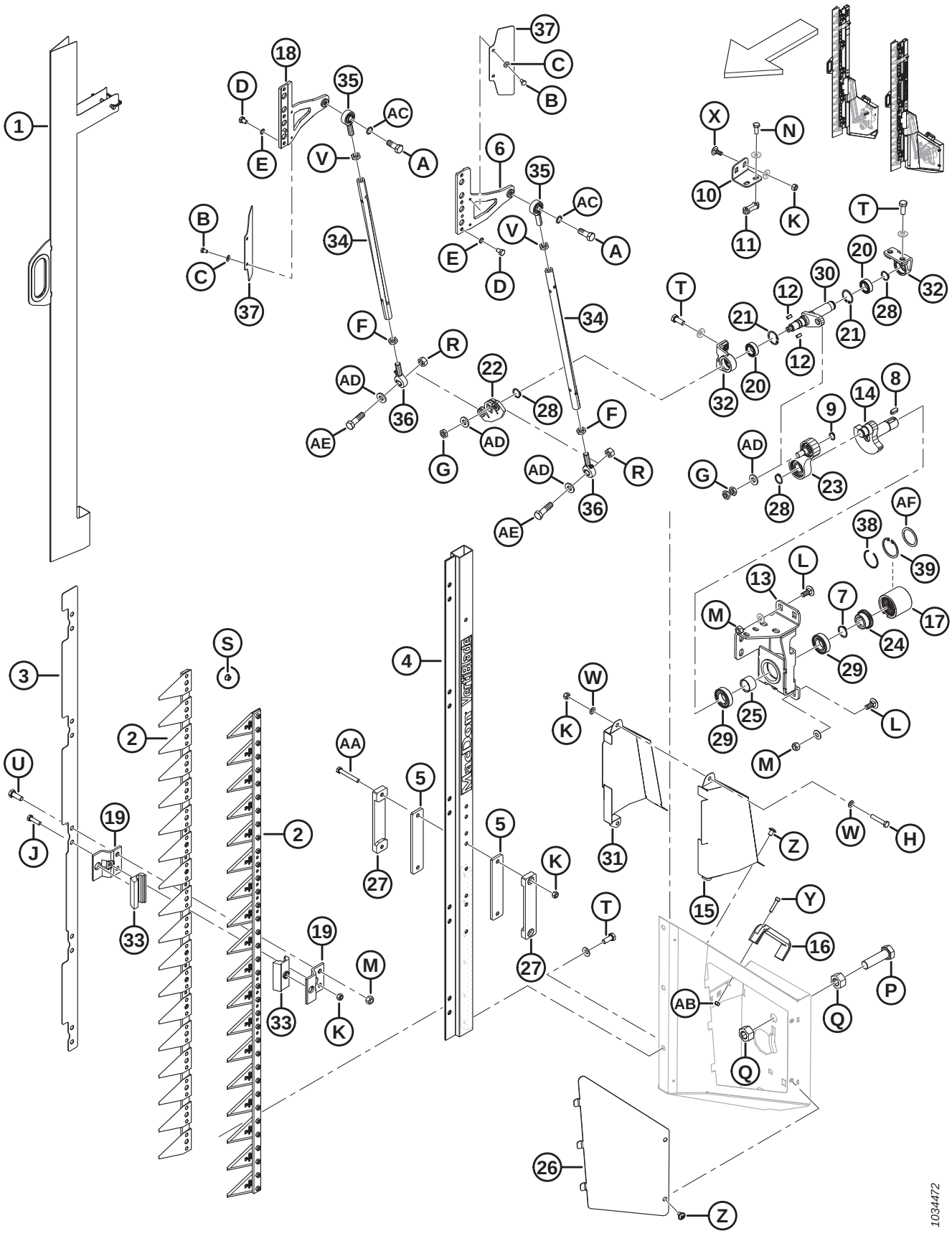

(OPTION) VERTIBLADE™ VERTICAL KNIFE COMPONENTS

Ref	Part Number	Description	Qty	Serial Number
32	313816	SUPPORT – OUTPUT SHAFT	4	
33	313803	GUIDE	20	
34	313829	TUBE	4	
35	313830	JOINT – BALL	4	
36	313831	JOINT – BALL BEARING	4	
37	313839	DEFLECTOR	4	
38	340077	RING – RETAINING [607]	1	
39	340078	RING – INTERNAL [607]	1	
	23165	DECAL – 50 HR LUBE		
	313881	DECAL – VERTICAL KNIFE HAZARD		
A	313847	SCREW – M12 X 1.75 X 32		
B	136561	BOLT – HEX HD TFL M6 X 1 X 10-8.8-AA1J		
C	30631	WASHER – LOCK SPRING M6		
D	313848	SCREW – HEX M8 X 1 X 12		
E	313849	WASHER – LOCK SCHNORR		
F	313844	NUT – HEX, M12 X 1.75 LH THD LOCK		
G	313845	NUT – HEX M12 X 1.5		
H	30660	BOLT – HEX HD M8 X 1.25 X 45-8.8-AA1J		
J	50140	BOLT – HEX HD M8 X 1.25 X 30-8.8-AA1J		
K	135337	NUT – HEX FLG CTR LK M8 X 1.25-8-AA1J		
L	135785	BOLT – RHSN M10 X 1.5 X 25-8.8-AA1J		
M	135799	NUT – HEX FLG CTR LOC M10 X 1.5-10		
N	136302	BOLT – HEX SER FLG HD TFL M8 X 1.25 X 20-8.8-ZINC		
P	136339	BOLT – HEX HD FINE TFL M20 X 1.5 X 70 X 8.8-ZINC		
Q	136342	NUT – HEX FINE M20 X 1.5 X 10-AA3L		
R	136759	NUT – HEX CTR LOC M12 X 1.75-8-AA1J		
S	152668	NUT – HEX FLG CTR LOC M6 X 1-8		
T	152670	BOLT – HEX FLG HD M10 X 1.5 X 20-SPC-8.8-AA1J		
U	184661	BOLT – HEX HD TFL M10 X 1.5 X 30-8.8-AA1J		
V	184696	NUT – HEX THIN M12 X 1.75-05-AA1J		
W	184708	WASHER – FLAT M8-200HV-AA1J		
X	197171	BOLT – RHSN M8 X 1.25 X 20-8.8-ZINC		
Y	252236	SCREW – HEX SOC M6 X 1 X 25-10.9 AA1T		
Z	252292	SCREW – HEX SOC BTN HD M8 X 1.25 X 12-10.9-AA1J		
AA	252398	BOLT – HEX HD M8 X 1.25 X 60-8.8-ZINC		
AB	136773	NUT – HEX CTR LOC M6 X 1-8-AA1J		

607. Service part for coupling (MD #313809).

(OPTION) VERTIBLADE™ VERTICAL KNIFE COMPONENTS

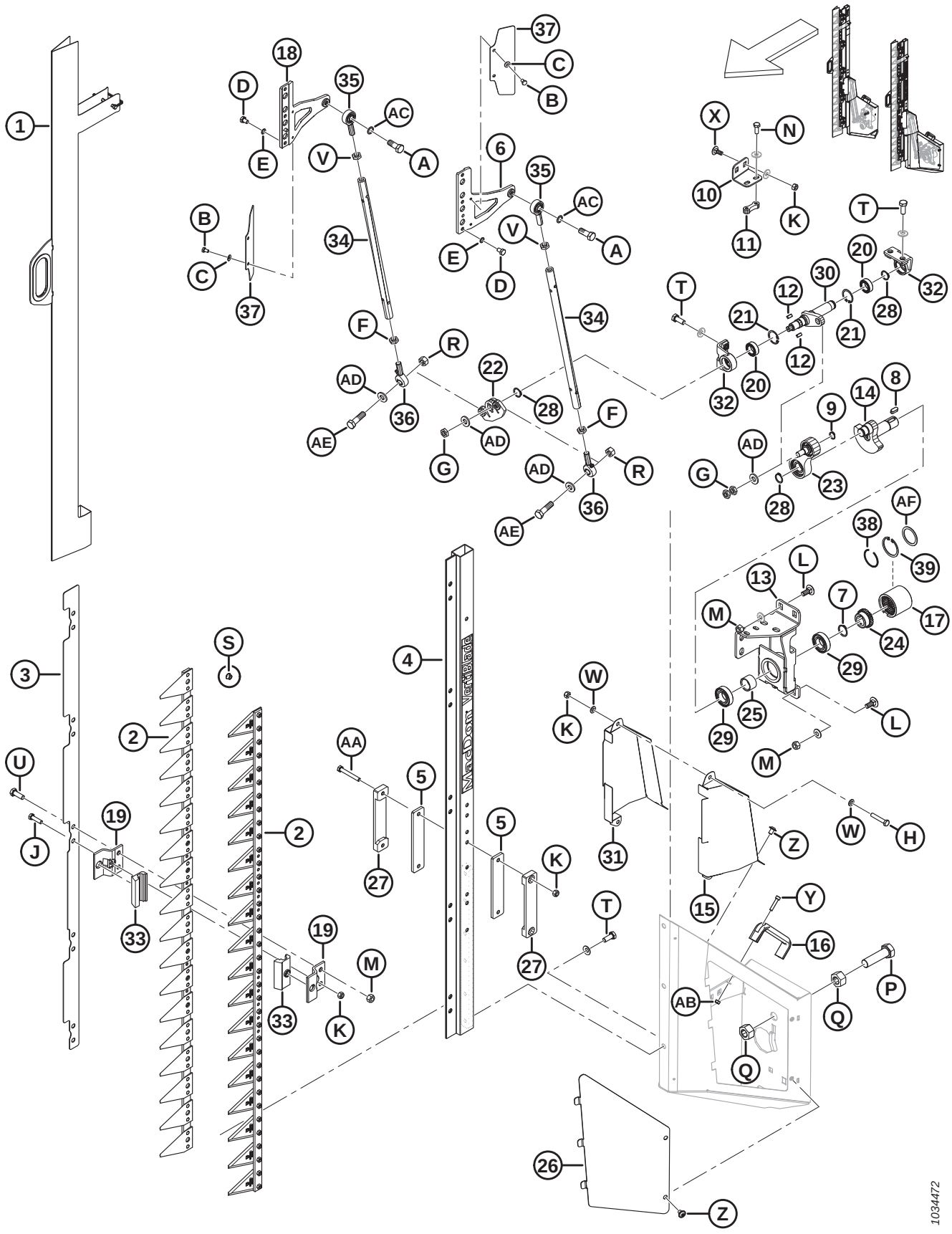

(OPTION) VERTIBLADE™ VERTICAL KNIFE COMPONENTS

Ref	Part Number	Description	Qty	Serial Number
AC	313846	WASHER – LOCK SCHNORR		
AD	313832	WASHER		
AE	313843	SCREW – M12 X 1.75 X 43		
AF	340076	WASHER [607]		

147 Frame Components – Float Module

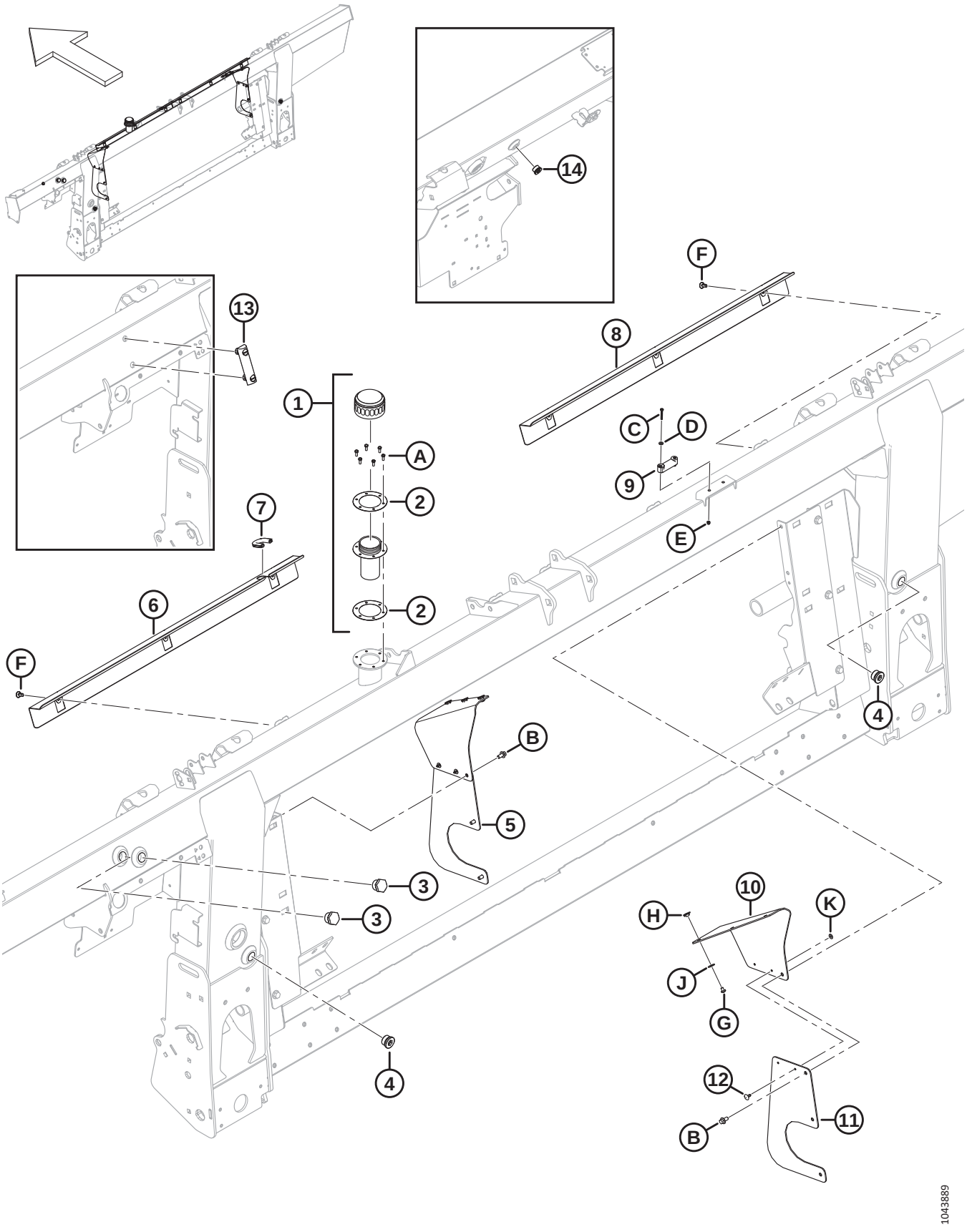

FRAME COMPONENTS – FLOAT MODULE

Ref	Part Number	Description	Qty	Serial Number
1	133942	CAP – OIL FILLER [608]	1	
2	304658	GASKET – OIL FILLER (2 PACK)	1	
3	304668	SIGHT GLASS (2022 AND PRIOR) [609]	2	
4	136269	PLUG – HEX SOCKET	2	
	30971	O-RING – Ø2.95 X Ø23.47		
5	357512	KIT – DUST COVER SIDES [610]	A/R	
6	**378133**	**COVER – LH**	**1**	
7	194082	MOULDING	1	
8	322870	COVER – RH	1	
9	322872	LEVEL – BUBBLE	1	
10	357174	FLAP – DUST COVER FILLER	2	
11	357173	COVER – FEED AUGER SIDE	2	
12	293053	RIVET – POP	4	
13	156696	GAUGE – LEVEL (2023 AND LATER) [611]	1	
14	**158174**	**FITTING – PLUG HYD 8 ORB HEX SOC** [612]	**A/R**	
	44209	**O-RING – 2.21 X 16.36**		
A	320397	SCREW – HEX HD TFL M5 X 0.8 X 12-8.8-PLAIN (2022 AND LATER)		421190–
	135873	SCREW – MACH #10-32 X 0.5 IN. HEX (2021 AND PRIOR)		–421189
B	136485	BOLT – HEX FLG HD TFL M8 X 1.25 X 16-8.8-AA1J		
C	320388	SCREW – PAN HD TFL M4 X 0.7 X 30-4.8-ZINC		
D	18798	WASHER – FLAT SAE 7/32 ID X 7/16 IN OD AA1J		
E	197320	NUT – HEX NYLOC M4 X 0.7-8-AA1J		
F	368221	KIT – PUSH-IN CLIP [613]		
G	252291	SCREW – PAN HD M6 X 1 X 8-8.8-AA1J		
H	252051	NUT – TEE M6		
J	184706	WASHER – FLAT LARGE M6-200HV		
K	293054	WASHER – FLAT LARGE M5-200HV-AA1J		

608. Remove the cap and gasket covering the fill hole during shipping (not shown). Retain six screws (MD #135873). Replace the cap and gasket with oil filler cap (MD #133942) which comes complete with oil cap (NSS), filler neck (NSS), and two gaskets (MD #304658). Use the six screws retained from the shipping cap to attach the oil filler cap to the frame. The oil filler cap comes shipped with the frame or can be ordered as a replacement.
609. Sight glass (MD #304668) is used for machines made in model year 2022 and prior.
610. This kit is used to service units with superseded side covers (MD #347558). The kit includes two dust cover filler flaps (MD #357174), two feed auger side covers (MD #357173), four pop rivets (MD #293053), and hardware.
611. Level gauge (MD #156696) is used for machines made in model year 2023 and later.
612. Plug fitting (MD #158174) is used only for float modules with an integrated hydraulic system.
613. Kit contains 6 push-in clips.

148 Pump, Gearbox, and Input Drive (Integrated Hydraulic System)

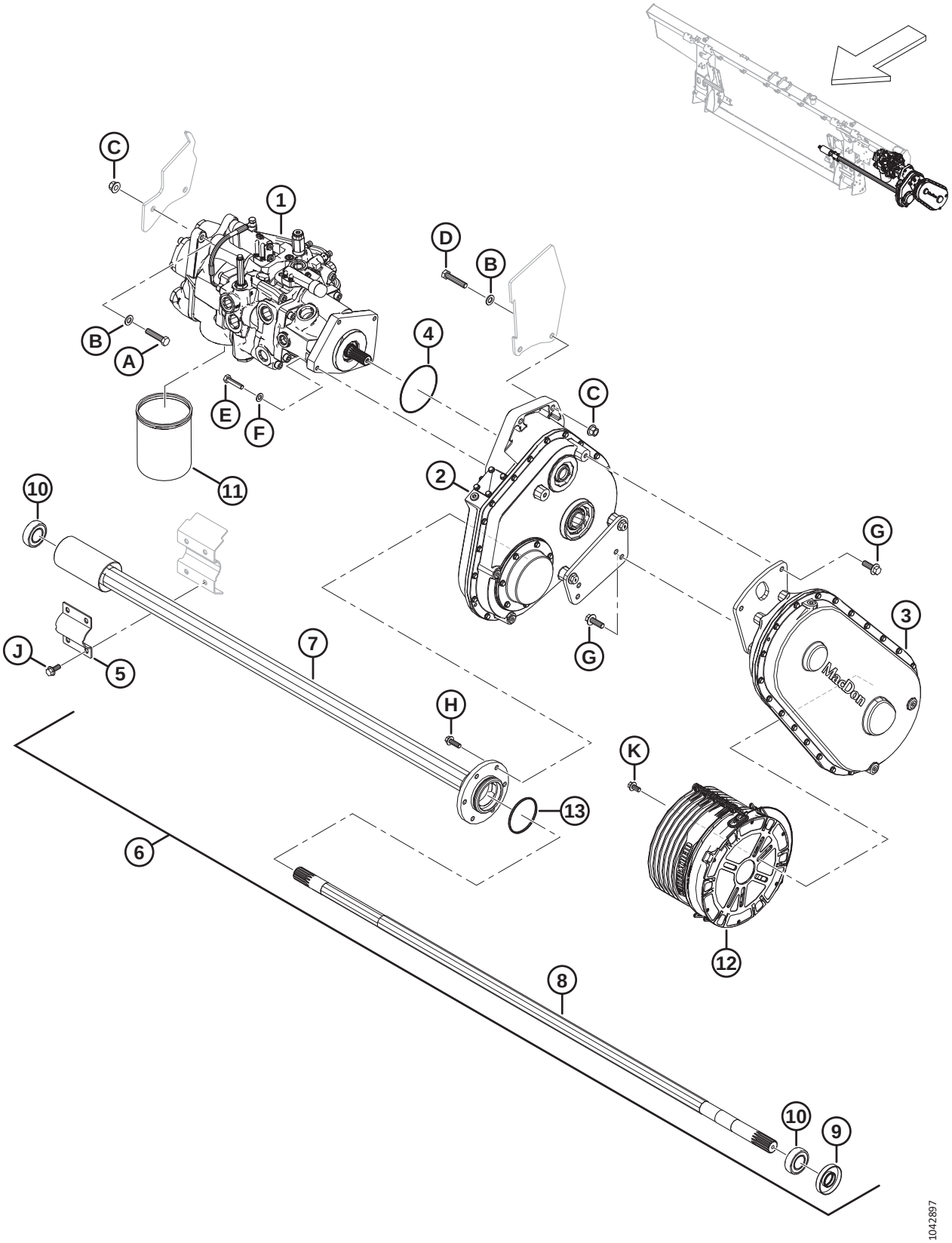

Ref	Part Number	Description	Qty	Serial Number
1	337774	PUMP – INTEGRATED [614]	1	
2	308725	DRIVE – FLOAT MODULE MAIN [615]	1	
3	308726	DRIVE – INPUT (CNH) [616]	1	
4	328713	O-RING – 2.62 X 113.97	1	
5	347185	CLAMP – AUGER PIVOT	1	
6	308732	ASSEMBLY – FEED AUGER SHAFT [617]	1	
7	328370	TUBE – OUTPUT	1	
8	308740	SHAFT – OUTPUT	1	
9	308755	SEAL – SHAFT	1	
10	21363	BEARING – SPH OD AND COLLAR C/W 2 SEALS	2	
11	320360	FILTER – HYD C/W 2X SEALS	1	
12	322561	GUARD – COUNTER CONE 250 MM	1	
13	252462	O-RING – 3.18 X 82.55	1	
A	152779	BOLT – HEX HD M12 X 1.75 X 55-8.8-AA1J		
B	184714	WASHER – FLAT REG M12-300HV		
C	136431	NUT – HEX FLG CTR LOC M12 X 1.75-10		
D	152274	BOLT – HEX HD M12 X 1.75 X 60-8.8-AA1J		
E	135335	BOLT – HEX HD M10 X 1.5 X 45-8.8-AA1J		
F	184711	WASHER – FLAT REG M10-200HV-AA1J		
G	152731	BOLT – HEX FLG HD TFL M12 X 1.75 X 35-10.9-AA1J		
H	184665	BOLT – HEX FLG HD M10 X 1.5 X 30-10.9-AA1J		
J	135783	BOLT – HEX FLG HD TFL M10 X 1.5 X 25-10.9-AA1J		
K	152655	BOLT – HEX FLG HD M10 X 1.5 X 20-8.8-AA1J		

614. For pump assembly, refer to Section *149 Pump Assembly (Integrated Hydraulic System), page 407*.
615. For gearbox assembly, refer to Section *154 Gearbox Assembly, page 421*.
616. Used with Case and New Holland combines. For input drive assembly, refer to Section *155 Input Drive Assembly, page 425*.
617. The feed auger shaft assembly includes shaft seal (MD #308755), collar bearing (MD #21363), output tube (MD #328370), output shaft (MD #328202), insert bearing (MD #328371), O-ring (MD #252462), and two set screws (MD #320418).

149 Pump Assembly (Integrated Hydraulic System)

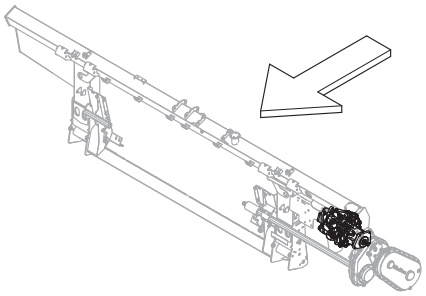

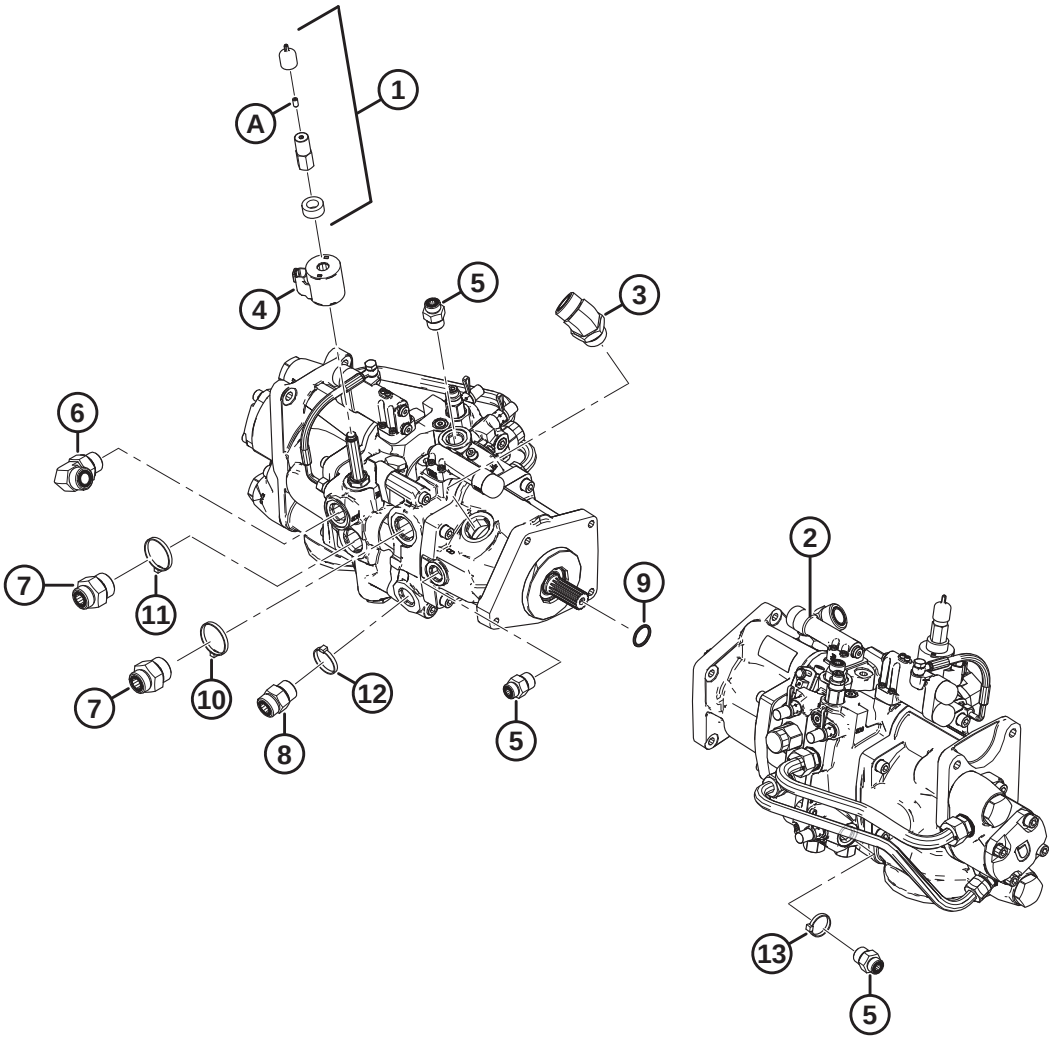

1034439

PUMP ASSEMBLY (INTEGRATED HYDRAULIC SYSTEM)

Ref	Part Number	Description	Qty	Serial Number
1	328262	KIT – MANUAL OVERRIDE [618]	1	
2	337774	PUMP – INTEGRATED [619]	1	
	322148	SEAL KIT		
3	252814	FITTING – ELBOW 45° HYD	1	
	135554	O-RING – 1.78 X 23.52		
	50220	O-RING – Ø2.95 X Ø29.74		
4	209045	COIL – SOLENOID	1	
5	184463	FITTING – ADAPTER HYD (M1, M2) [620]	3	
	44210	O-RING – Ø2.46 X Ø19.18		
	135866	O-RING – Ø1.78 X Ø12.42		
6	135821	FITTING – ELBOW 90° HYD (SDP) [621]	1	
	30971	O-RING – Ø2.95 X Ø23.47		
	135868	O-RING – Ø1.78 X Ø18.77		
7	135789	FITTING – ADAPTER (KP) [622]	2	
	50220	O-RING – Ø2.95 X Ø29.74		
	135868	O-RING – Ø1.78 X Ø18.77		
8	135788	FITTING – ADAPTER (SDR) [623]	1	
	30971	O-RING – Ø2.95 X Ø23.47		
	135868	O-RING – Ø1.78 X Ø18.77		
9	17006	O-RING – 3.18 X 25.40	1	
10	40704	FASTENER – CABLE TIE, ORANGE	1	
11	40703	FASTENER – CABLE TIE, BLUE	1	
12	40702	FASTENER – CABLE TIE, RED	1	
13	21763	FASTENER – CABLE TIE, BLACK	1	
A	21061	SCREW – SET HEX SOC 1/4-20 X 1/2 GR5 AF0C	1	

618. The kit includes spacer coil (NSS), dust cap (NSS), coil nut (NSS), and set screw (MD #21061).
619. If replacement parts are needed for discontinued seal kit (MD #328281) or discontinued relief valves (MD #322159 and MD #328282), order new integrated pump (MD #337774). For integrated pump service parts, refer to Section *150 Integrated Pump – Service Parts (Integrated Hydraulic System), page 409*.
620. Connects to ports M1 and M2.
621. Connects to port SDP.
622. Connects to port KP.
623. Connects to port SDR.

150 Integrated Pump – Service Parts (Integrated Hydraulic System)

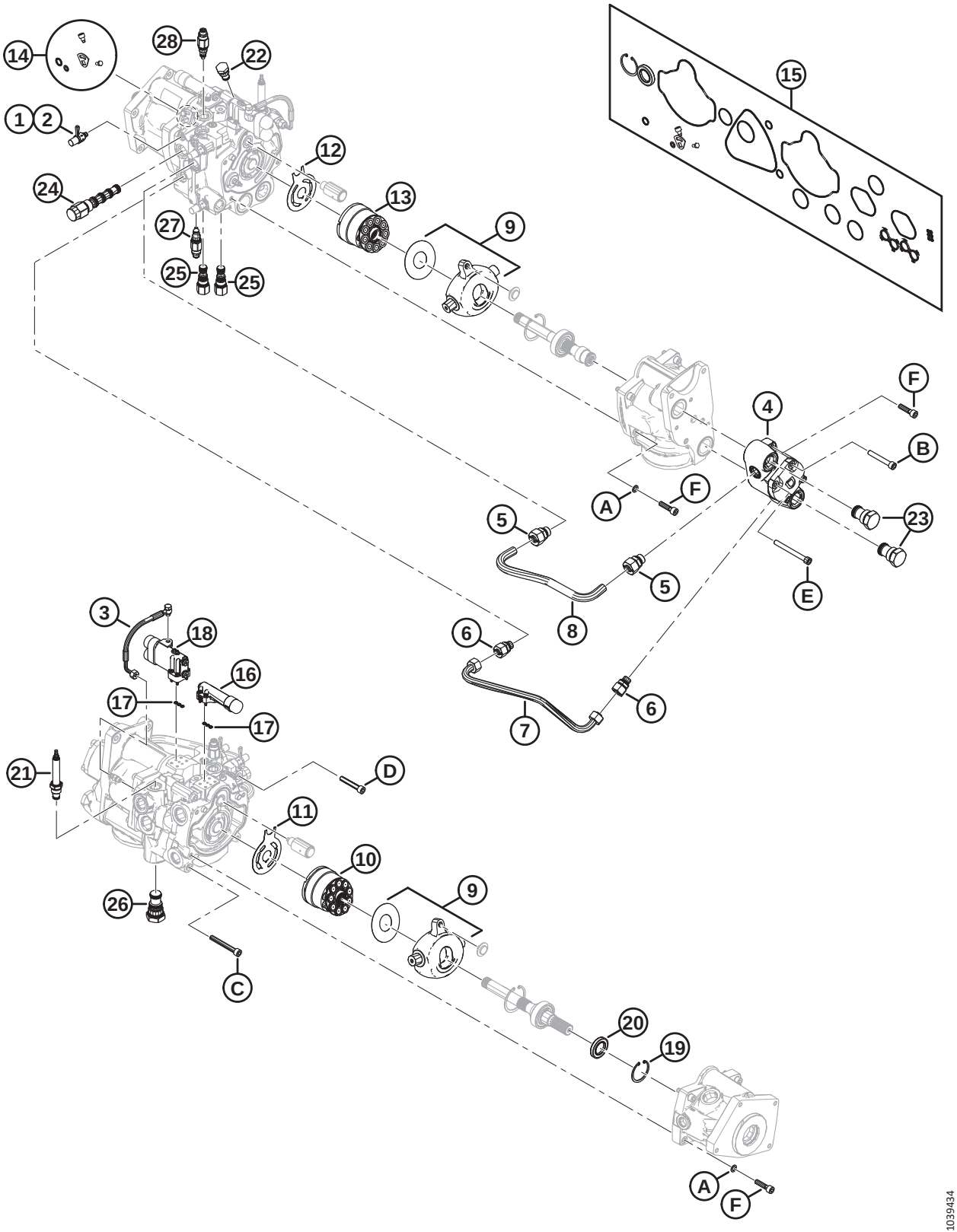

NOTE:

All illustrated parts that are **NOT** in the parts list are non-serviced parts, illustrated for reference only.

Ref	Part Number	Description	Qty	Serial Number
	337774	PUMP – INTEGRATED [624]		
1	136900	CAP – DUST	3	
2	134437	FITTING – COUPLING HYD-TEST PORT	3	
3	276790	KIT – LS HOSE AND HARDWARE	1	
4	328288	KIT – 15CC GEAR PUMP W/ HARDWARE	1	
5	328292	FITTING – ADAPTER (18 MM) [625]	2	
6	328293	FITTING – ADAPTER (15 MM) [626]	2	
7	328291	LINE – REVERSE [627]	1	
8	328290	LINE – FORWARD [627]	1	
9	337441	KIT – SWASHPLATE REBUILD	2	
10	328313	KIT – 45CC ROTATING GROUP	1	
11	328312	PLATE – VALVE	1	
12	328311	PLATE – VALVE	1	
13	328310	KIT – 38CC ROTATING GROUP	1	
14	337440	KIT – KNIFE PUMP CAM SEAL	1	
15	328309	KIT – PUMP SEAL	1	
16	328306	KIT – KNIFE DRIVE COMPENSATOR [628]	1	
	357937	CAP – DUST	1	
17	328308	KIT – COMPENSATOR SEALS (LOAD SENSE)	2	
18	328307	KIT – SIDE DRAPER COMPENSATOR [629]	1	
	357937	CAP – DUST	2	
19	328178	RING – RETAINING INTERNAL	1	
20	322142	SEAL – SHAFT	1	
21	328261	VALVE – FLOW CONTROL (MV) [630]	1	
	252351	SEAL KIT		
22	123318	VALVE – CHECK (CV6) [631]	1	
	322148	SEAL KIT		

624. Refer to Section *149 Pump Assembly (Integrated Hydraulic System), page 407*.
625. 18 mm diameter; fitting does not include a captive nut.
626. 15 mm diameter; fitting does not include a captive nut.
627. Reverse and forward lines include captive nuts at each end.
628. The kit includes one compensator (NSS), four M5 bolts (NSS), and one dust cap (MD #357937).
629. The kit includes one compensator (NSS), four M5 bolts (NSS), and two dust caps (MD #357937).
630. Connects to port MV.
631. Connects to port CV6.

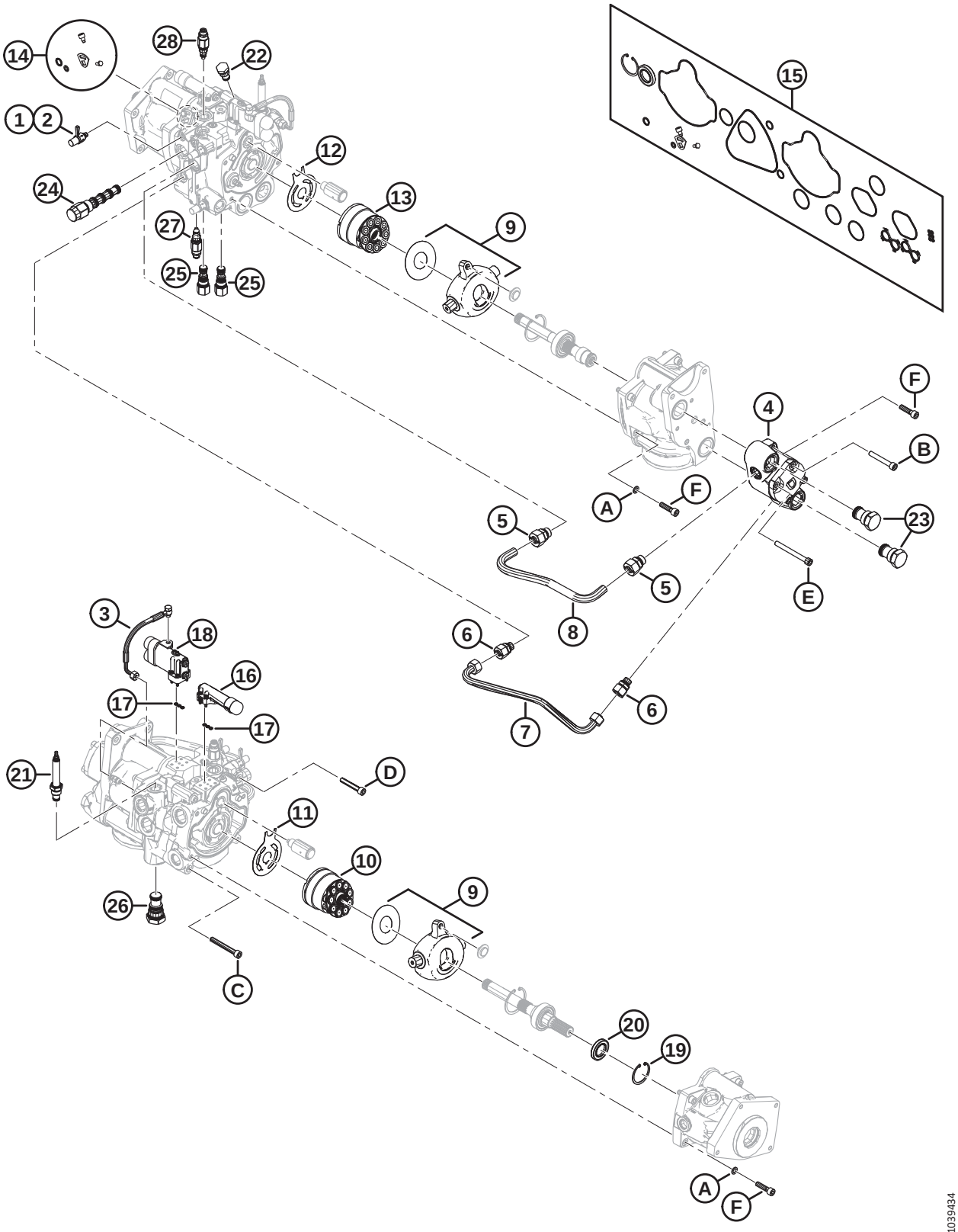
14
28
22
15
1
2
12
24
13
9
27
25
25
F
4
B
A
F
5
23
5
E
8
3
18
6
16
17
6
17
7
21
D
11
10
9
26
C
20
19
A
F
1039434

Ref	Part Number	Description	Qty	Serial Number
23	322161	VALVE – CHECK (CV1, CV2) [632]	2	
	328283	SEAL KIT		
24	322160	VALVE – PO 3WAY (DH) [633]	1	
	328269	SEAL KIT		
25	322158	VALVE – PO LOGIC -10 (LE1, LE2) [634]	2	
	322148	SEAL KIT		
26	322157	VALVE – PO LOGIC ELEMENT-16 (LE3) [635]	1	
	322149	SEAL KIT		
27	337773	VALVE – RELIEF (RV2) [636]	1	
	337823	SEAL KIT		
28	337770	VALVE – RELIEF (RV1) [637]	1	
	337823	SEAL KIT		
	328262	KIT – MANUAL OVERRIDE [624]	1	
A	337433	WASHER – M10 SPECIAL		
B	337427	BOLT – SOC HD M10 X 70GR12.9		
C	337431	BOLT – SOC HD M10 X 80GR12.9		
D	337432	BOLT – SOC HD M10 X 60GR12.9		
E	337429	BOLT – SOC HD M10 X 100 GR12.9		
F	337430	BOLT – SOC HD M10 X 40GR12.9		

632. Connects to ports CV1 and CV2.
633. Connects to port DH.
634. Connects to ports LE1 and LE2.
635. Connects to port LE3.
636. Connects to port RV2.
637. Connects to port RV1.

151 Pump, Gearbox, and Input Drive (Modular Hydraulic System)

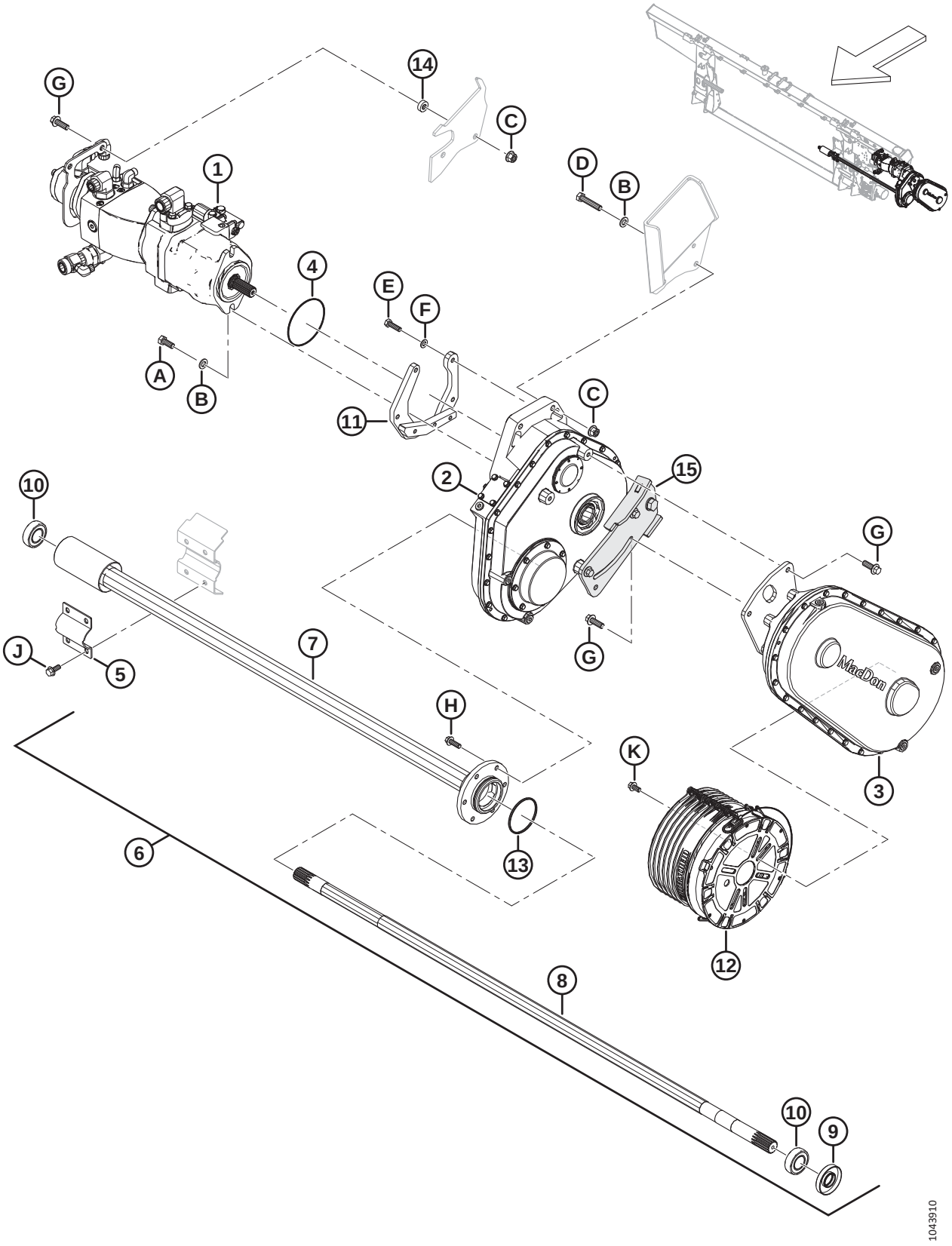

Ref	Part Number	Description	Qty	Serial Number
1	REF	ASSY – PUMP AND GEAR (MODULAR HYDRAULIC SYSTEM) [638]	1	
2	368761	DRIVE – FLOAT MODULE MAIN [639]	1	
3	308726	DRIVE – INPUT (CNH) [640]	1	
4	328713	O-RING – 2.62 X 113.97	1	
5	347185	CLAMP – AUGER PIVOT	1	
6	308732	ASSEMBLY – FEED AUGER SHAFT [641]	1	
7	328370	TUBE – OUTPUT	1	
8	308740	SHAFT – OUTPUT	1	
9	308755	SEAL – SHAFT	1	
10	21363	BEARING – SPH OD AND COLLAR C/W 2 SEALS	2	
11	368669	SUPPORT – PUMP, WELDT	1	
12	322561	GUARD – COUNTER CONE 250 MM	1	
13	252462	O-RING – 3.18 X 82.55	1	
14	323998	TUBE – SPACER	1	
15	REF	SUPPORT – WELDT BRACE (MODULAR HYDRAULIC SYSTEM) [642]	1	
A	30630	BOLT – HEX HD TFL M12 X 1.75 X 30-8.8-A3L		
B	184714	WASHER – FLAT REG M12-300HV		
C	136431	NUT – HEX FLG CTR LOC M12 X 1.75-10		
D	320559	BOLT – HEX HD M12 X 1.75 X 60-10.9-ZINC		
E	30628	BOLT – HEX HD M10 X 1.5 X 35-8.8-AA1J		
F	184711	WASHER – FLAT REG M10-200HV-AA1J		
G	152731	BOLT – HEX FLG HD TFL M12 X 1.75 X 35-10.9-AA1J		
H	184665	BOLT – HEX FLG HD M10 X 1.5 X 30-10.9-AA1J		
J	135783	BOLT – HEX FLG HD TFL M10 X 1.5 X 25-10.9-AA1J		
K	152655	BOLT – HEX FLG HD M10 X 1.5 X 20-8.8-AA1J		

638. For pump assembly, refer to Section *152 Pump Assembly (Modular Hydraulic System), page 415*.
639. For gearbox assembly, refer to Section *154 Gearbox Assembly, page 421*.
640. Used with Case and New Holland combines. For input drive assembly, refer to Section *155 Input Drive Assembly, page 425*.
641. The feed auger shaft assembly includes shaft seal (MD #308755), collar bearing (MD #21363), output tube (MD #328370), output shaft (MD #328202), insert bearing (MD #328371), O-ring (MD #252462), and two set screws (MD #320418).
642. For gearbox brace, refer to Section *153 Gearbox Brace (Modular Hydraulic System), page 419*.

152 Pump Assembly (Modular Hydraulic System)

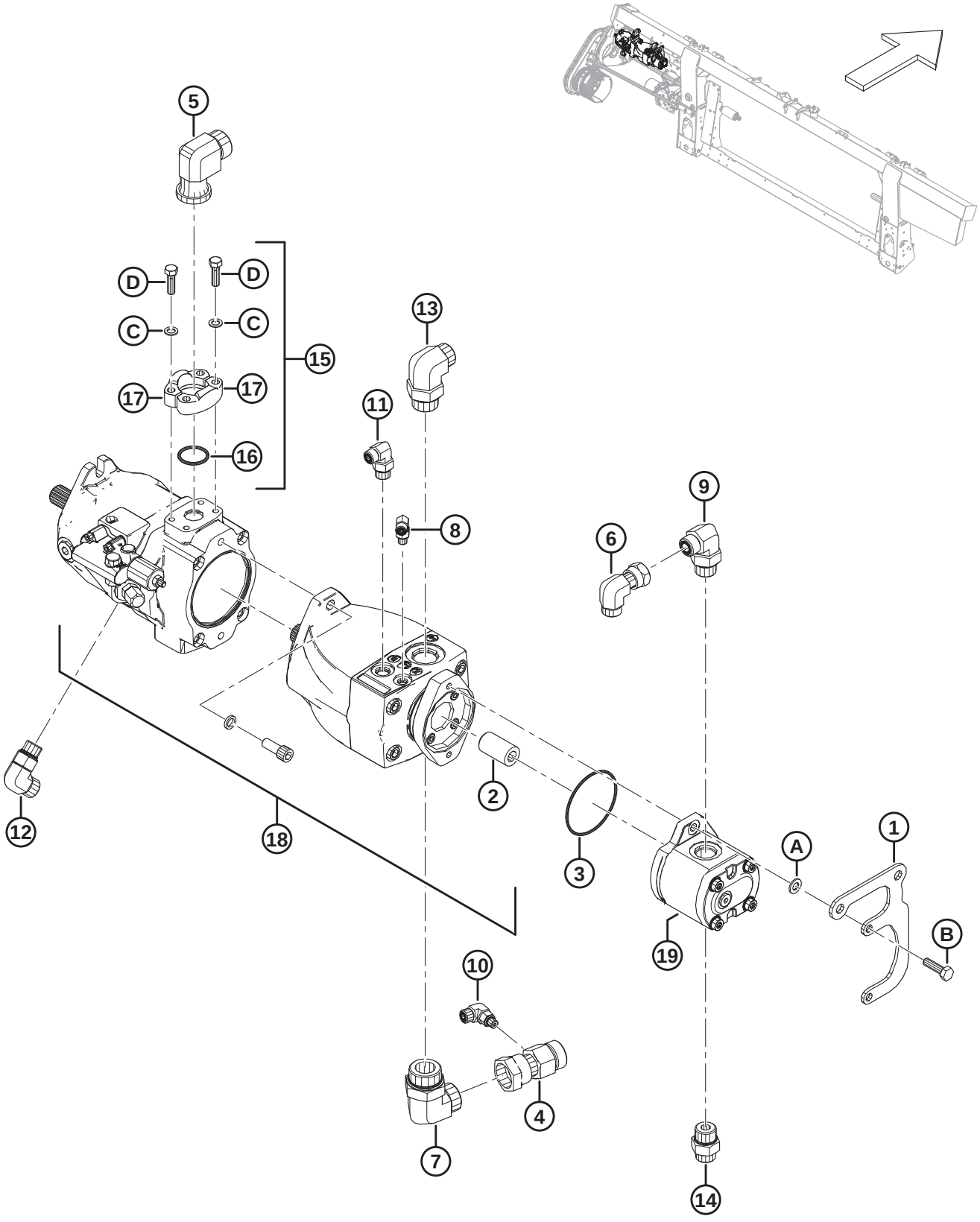

Ref	Part Number	Description	Qty	Serial Number
1	378248	BRACKET – TAIL SUPPORT	1	
2	295140	COUPLER – SPLINED, 20-11T [643]	1	
3	136024	O-RING – 3.00 X 85.00	1	
4	252554	FITTING – TEE HYD, GAUGE PORT	1	
	135868	O-RING – 1.78 X 18.77		
5	252208	FITTING – 90° 16-16 CODE61-ORFS	1	
	112868	O-RING – 3.53 X 32.92		
	135554	O-RING – 1.78 X 23.52		
6	136846	FITTING – ELBOW 90° HYD	1	
	135867	O-RING – 1.78 X 15.60		
7	136766	FITTING – ELBOW 90° HYD	1	
	50222	O-RING – 3.00 X 37.47		
	135554	O-RING – 1.78 X 23.52		
8	136447	FITTING – ELBOW 90° HYD	1	
	50223	O-RING – 1.83 X 8.92		
	135957	O-RING – 1.78 X 7.65		
9	136347	FITTING – ELBOW 90° HYD	1	
	135867	O-RING – 1.78 X 15.60		
	30971	O-RING – 2.95 X 23.47		
10	136337	FITTING – ELBOW 90° HYD	1	
	50223	O-RING – 1.83 X 8.92		
	135865	O-RING – 1.78 X 9.25		
11	136149	FITTING – ELBOW 90°HYD	1	
	44209	O-RING – 2.21 X 16.36		
	135865	O-RING – 1.78 X 9.25		
12	136089	FITTING – ELBOW 90° HYD	1	
	44210	O-RING – 2.46 X 19.18		
	135867	O-RING – 1.78 X 15.60		
13	135901	FITTING – ELBOW 90° HYD	1	
	50220	O-RING – 2.95 X 29.74		
	135868	O-RING – 1.78 X 18.77		
14	135786	FITTING – ADAPTER	1	
	30971	O-RING – 2.95 X 23.47		
	135867	O-RING – 1.78 X 15.60		
15	112866	KIT – SPLIT FLANGE, 1 INCH CD 61 [644]	1	
16	112868	O-RING – 3.53 X 32.92	1	

643. Service part only for draper drive pump (NSS).

644. The kit includes two half-split flanges (MD #194033), O-ring (MD #112868), four bolts (MD #252640), and four flat washers (MD #30191).

PUMP ASSEMBLY (MODULAR HYDRAULIC SYSTEM)

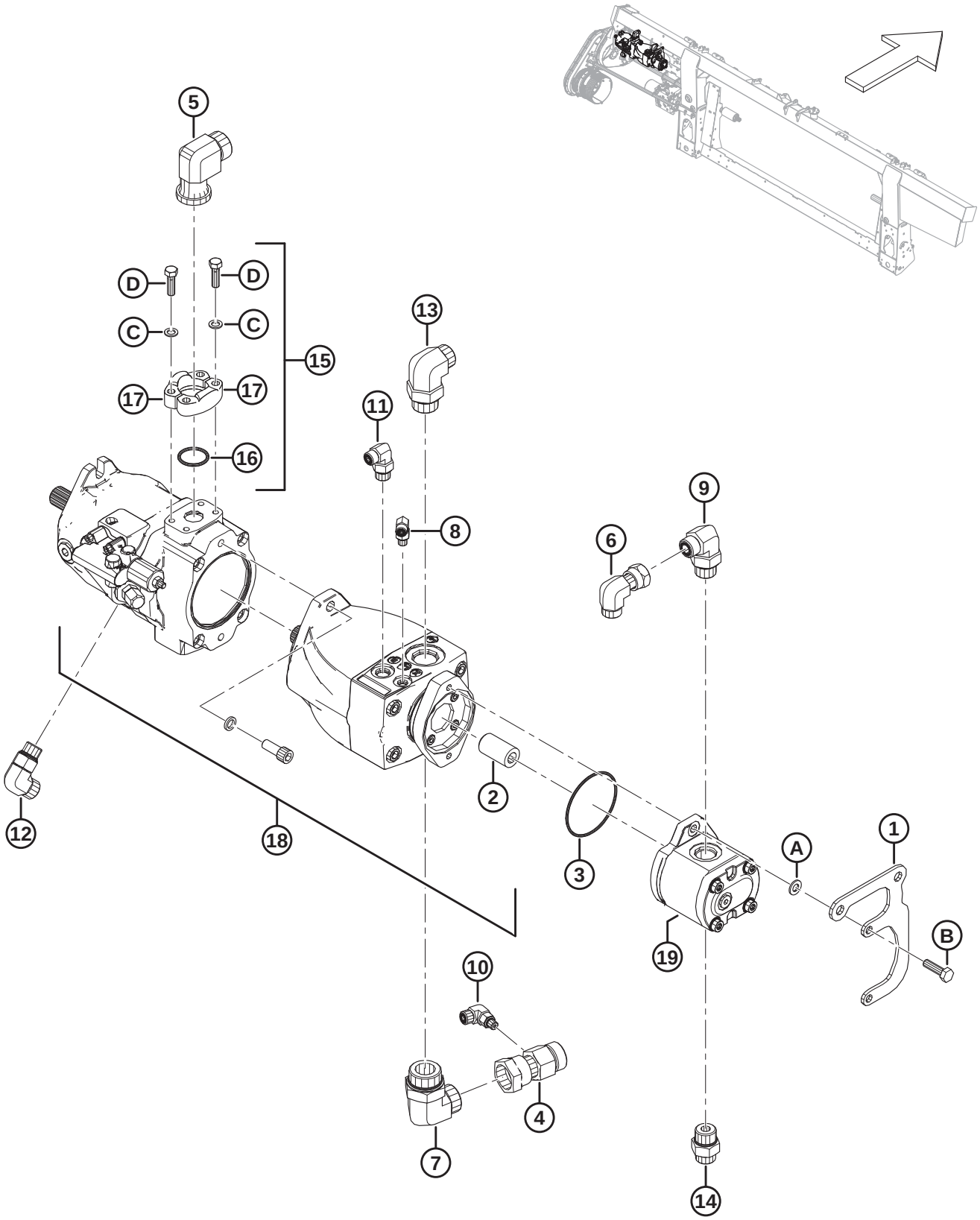

PUMP ASSEMBLY (MODULAR HYDRAULIC SYSTEM)

Ref	Part Number	Description	Qty	Serial Number
17	**194033**	**FLANGE – HALF SPLIT 1 INCH-CODE 61**	**2**	
18	**NSS**	**ASSY – PUMPS DRAPER KNIFE** [645]	**1**	
19	**187252**	**GEAR PUMP – 16 CC**	**1**	
	187967	**SEAL KIT**		
A	**184711**	**WASHER – FLAT REG M10-200HV-AA1J**		
B	**30628**	**BOLT – HEX HD M10 X 1.5 X 35-8.8-AA1J**		
C	**252640**	**BOLT – HEX HD 3/8-16 X 1.25-GR 8-AA3L**		
D	**30191**	**WASHER – HARDENED ASTM F436 3/8**		

645. Not sold separately; includes two piston pumps and coupler (MD #295140).

153 Gearbox Brace (Modular Hydraulic System)

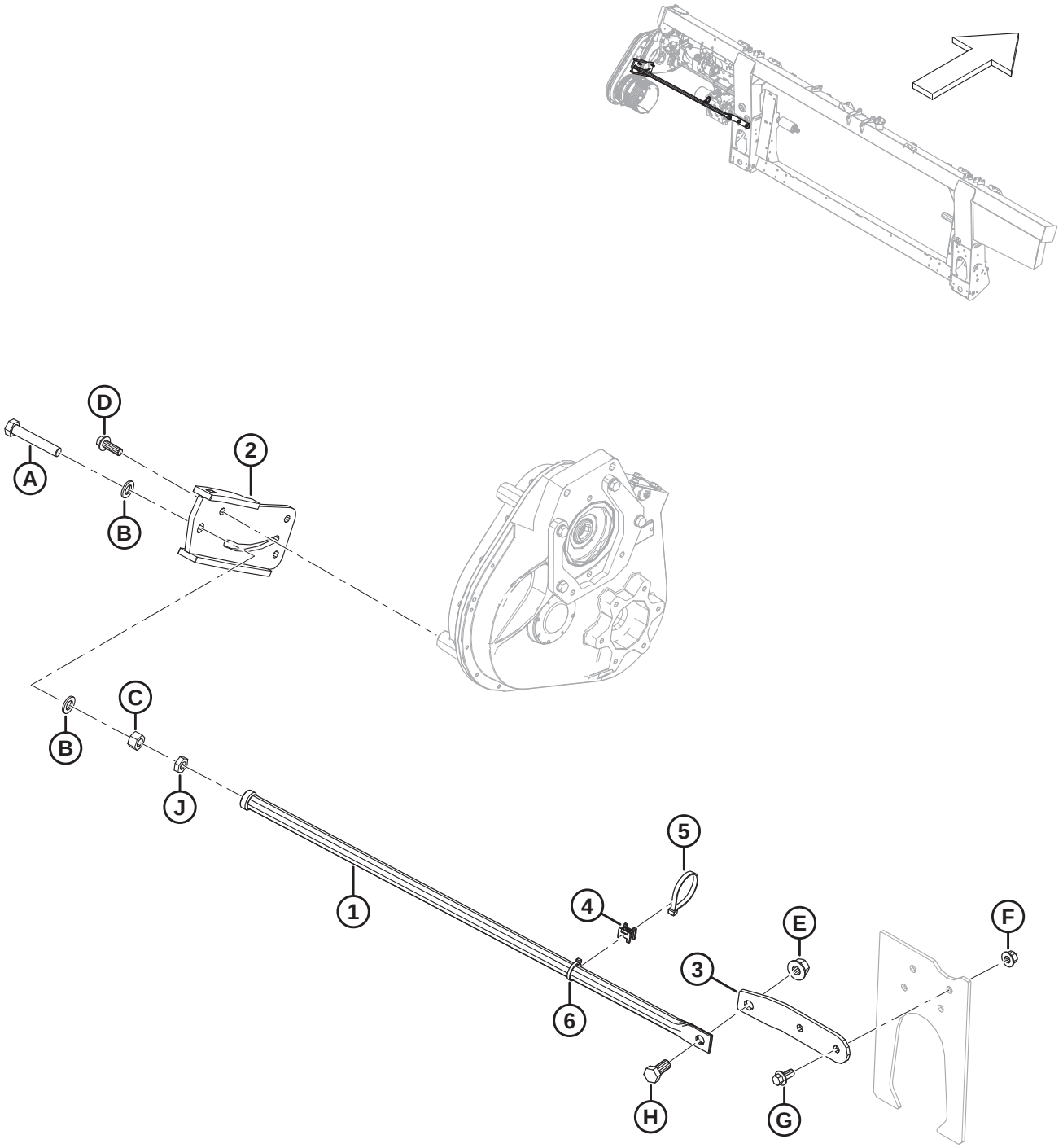

1043929

GEARBOX BRACE (MODULAR HYDRAULIC SYSTEM)

NOTE:

This brace is used only for float modules with a modular hydraulic system.

Ref	Part Number	Description	Qty	Serial Number
1	**378236**	**SUPPORT – INPUT DRIVE, WELD'T**	**1**	
2	**368843**	**SUPPORT – BRACE**	**1**	
3	**368845**	**BRACKET – BRACE**	**1**	
4	**134442**	**SPACER – DUAL SWIVEL SADDLE**	**1**	
5	**30753**	**FASTENER – CABLE TIE, BLACK, 305 MM**	**1**	
6	**21763**	**FASTENER – CABLE TIE, BLACK, 160 MM**	**1**	
A	**252533**	**BOLT – HEX HD TFL M16 X 2 X 90-10.9-AA3L**		
B	**184717**	**WASHER – FLAT REG M16-200HV-AA1J**		
C	**184699**	**NUT – HEX M16 X 2-8-AA1J**		
D	**152731**	**BOLT – HEX FLG HD TFL M12 X 1.75 X 35-10.9-ZINC**		
E	**136440**	**NUT – HEX FLG CTR LK M16 X 2-10-AA1J**		
F	**136431**	**NUT – HEX FLG CTR LOC M12 X 1.75-10**		
G	**136399**	**BOLT – HEX FLG HD TFL M12 X 1.75 X 25-8.8-AA1J**		
H	**136137**	**BOLT – HEX HD TFL M16 X 2 X 35-8.8-AA1J**		
J	**136473**	**NUT – HEX THIN M16 X 2-05-AA1J**		

154 Gearbox Assembly

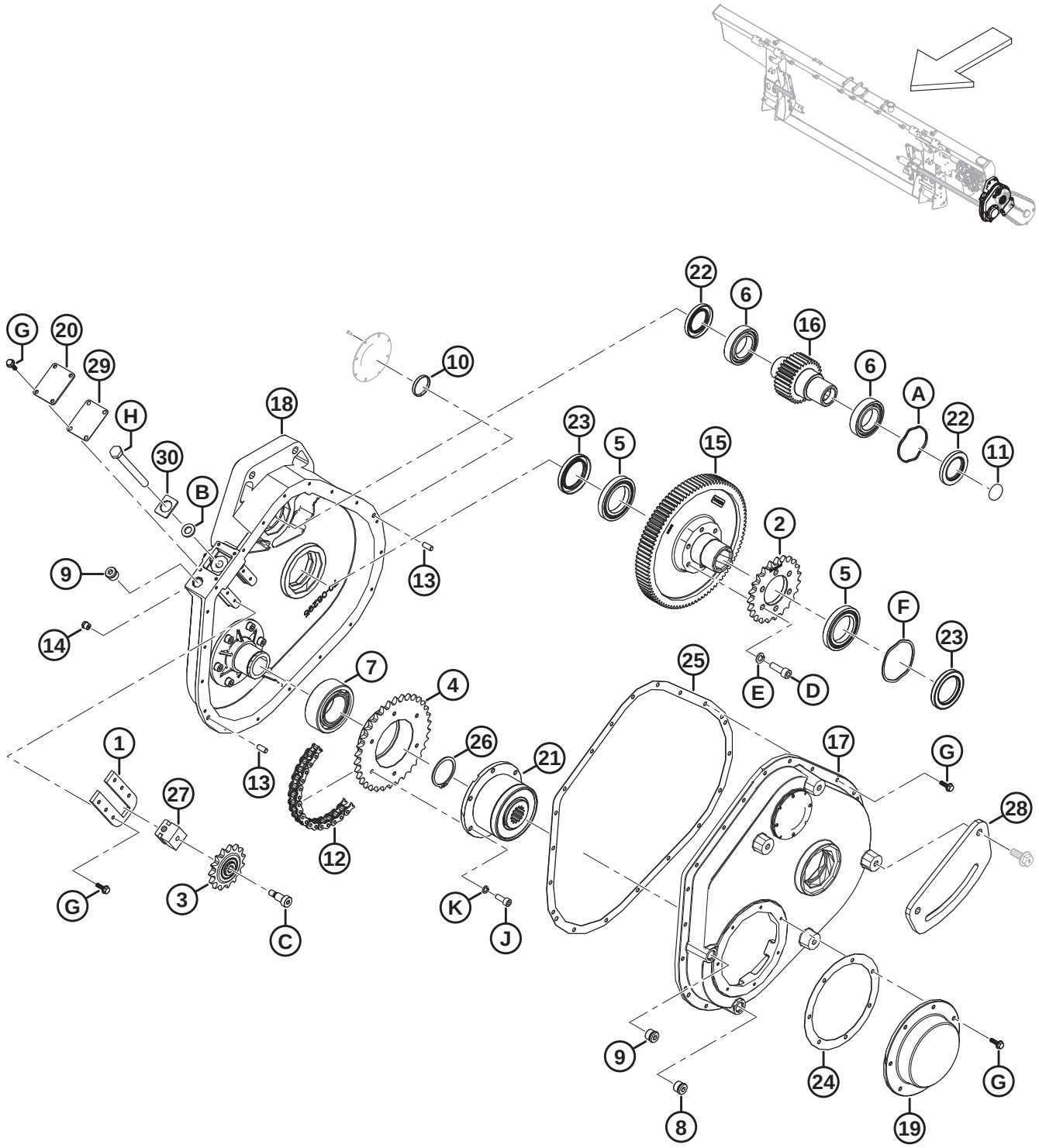

GEARBOX ASSEMBLY

Ref	Part Number	Description	Qty	Serial Number
	308725	DRIVE – FLOAT MODULE MAIN **(INTEGRATED HYDRAULIC SYSTEM)** [646]		
	347405	KIT – GEARBOX UPDATE **(INTEGRATED HYDRAULIC SYSTEM)** [647]	A/R	
	368761	**DRIVE – FLOAT MODULE MAIN (MODULAR HYDRAULIC SYSTEM)** [648]		
1	328181	PLATE – TENSIONER	1	
2	322409	SPROCKET – 50A23	1	
3	328188	SPROCKET – 50B15 C/W BEARING	1	
4	328187	SPROCKET – 50B34	1	
5	322193	BEARING – BALL	2	
6	322192	BEARING – BALL	2	
7	322197	BEARING – DOUBLE ROW BALL	1	
8	328154	PLUG – M18 ORB MAGNETIC	1	
9	328152	PLUG – M18 ORB	1	
10	328186	PLUG	1	
11	328185	PLUG	1	
12	301971	CHAIN – ROLLER, RC-50-56P ENDLESS	1	
13	NSS	PIN – DOWEL	2	
14	328176	BREATHER – 1/8-27 NPT	1	
15	328175	GEAR – 94 TEETH	1	
16	328174	GEAR – 30 TEETH	1	
17	NSS	HOUSING – GEARBOX	1	
18	NSS	HOUSING – GEARBOX	1	
19	328164	COVER – CLUTCH	1	
20	328165	COVER – TENSIONER	1	
21	314082	CLUTCH – WEASLER	1	
22	347416	SEAL – VITON 38 X 62 X 7	2	
23	347417	SEAL – VITON 48 X 72 X 8	2	
24	328161	GASKET – CLUTCH COVER	1	
25	347410	GASKET – FM200 MAIN GEARBOX	1	
26	322195	RING – RETAINING	1	
27	328157	BLOCK – IDLER	1	

646. Service part only for float modules with an integrated hydraulic system.
647. The gearbox update kit is used to update model year 2020 gearboxes. The kit includes spacers (MD #347408, MD #347409), gasket (MD #347410), two seals (MD #347416), two seals (MD #347417), wave spring washers (MD #328159, MD #328160), gears (MD #328174, MD #328175), ball bearings (MD #322192, MD #322193), sprocket (MD #322409), screws (MD #135401), washers (MD #30632), and instructions.
648. Service part only for float modules with a modular hydraulic system.

GEARBOX ASSEMBLY

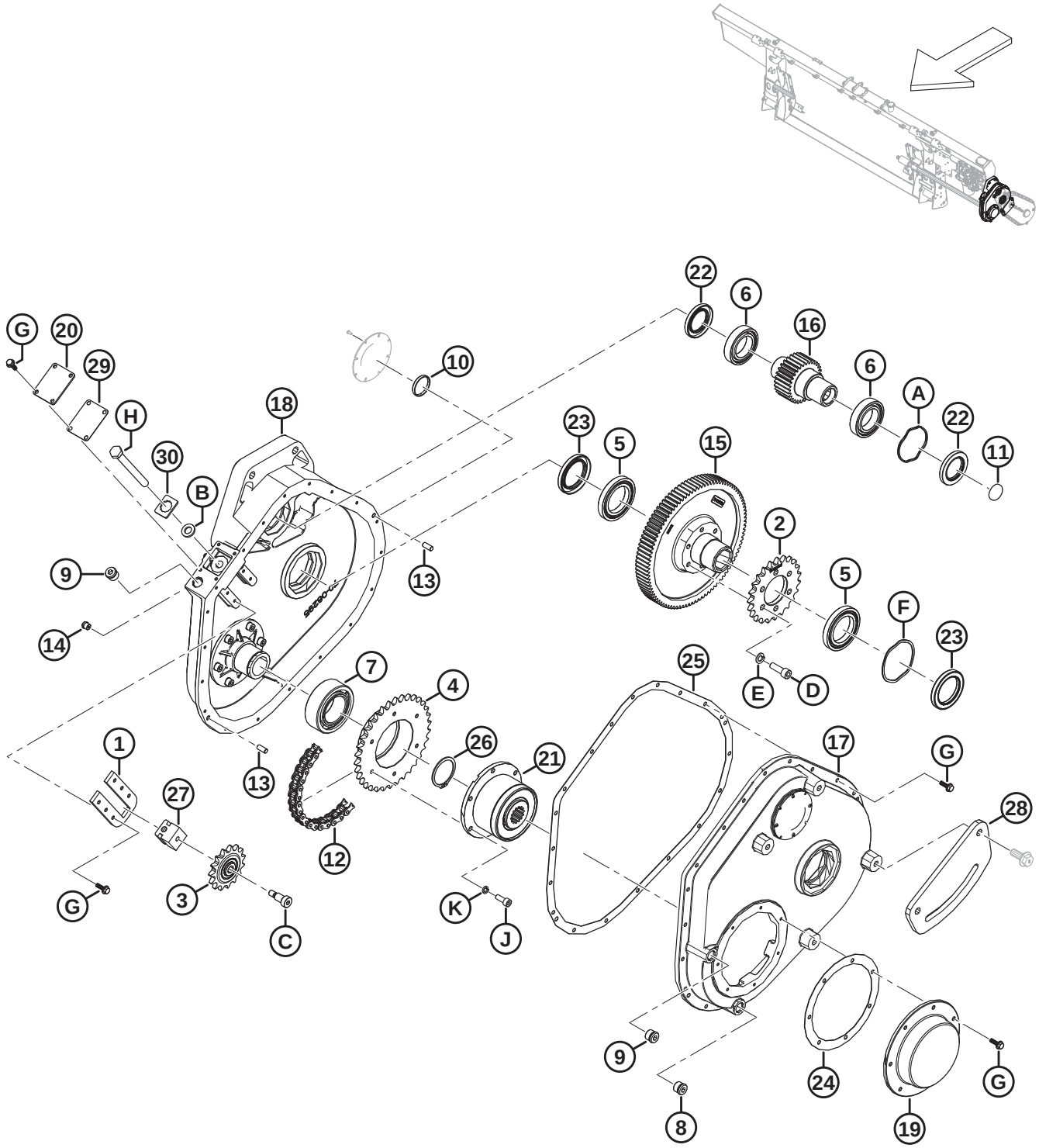

GEARBOX ASSEMBLY

Ref	Part Number	Description	Qty	Serial Number
28	347349	BRACKET – MAIN CMPLTN JOINT **(INTEGRATED HYDRAULIC SYSTEM ONLY)** [649]	1	
29	328162	GASKET – TENSIONER	1	
30	368863	PLATE – GEARBOX BOLT	1	
A	328160	WASHER – WAVE SPRING		
B	184587	WASHER – FLAT 1/2 X 1.25 AA1J		
C	328184	BOLT – SHOULDER 3/8-16 X 3/4 LG		
D	347978	SCREW – CAP M10 X 1.5 X 30		
	135401	SCREW – HEX SOC HD TFL M10 X 1.5 X 30-8.8-AA1J [650]		
E	347975	WASHER – LOCK M10 CAP SCREW		
	30632	WASHER – LOCK SPRING M10 [650]		
F	328159	WASHER – WAVE SPRING		
G	328156	BOLT – SERRATED FLANGE		
H	328158	BOLT – TENSIONER		
J	347977	SCREW – CAP M8 X 1 X 20		
K	347976	WASHER – LOCK M8 CAP SCREW		

649. This bracket is used only for float modules with an integrated hydraulic system.
650. For machines serviced with gearbox update kit (MD #347405).

155 Input Drive Assembly

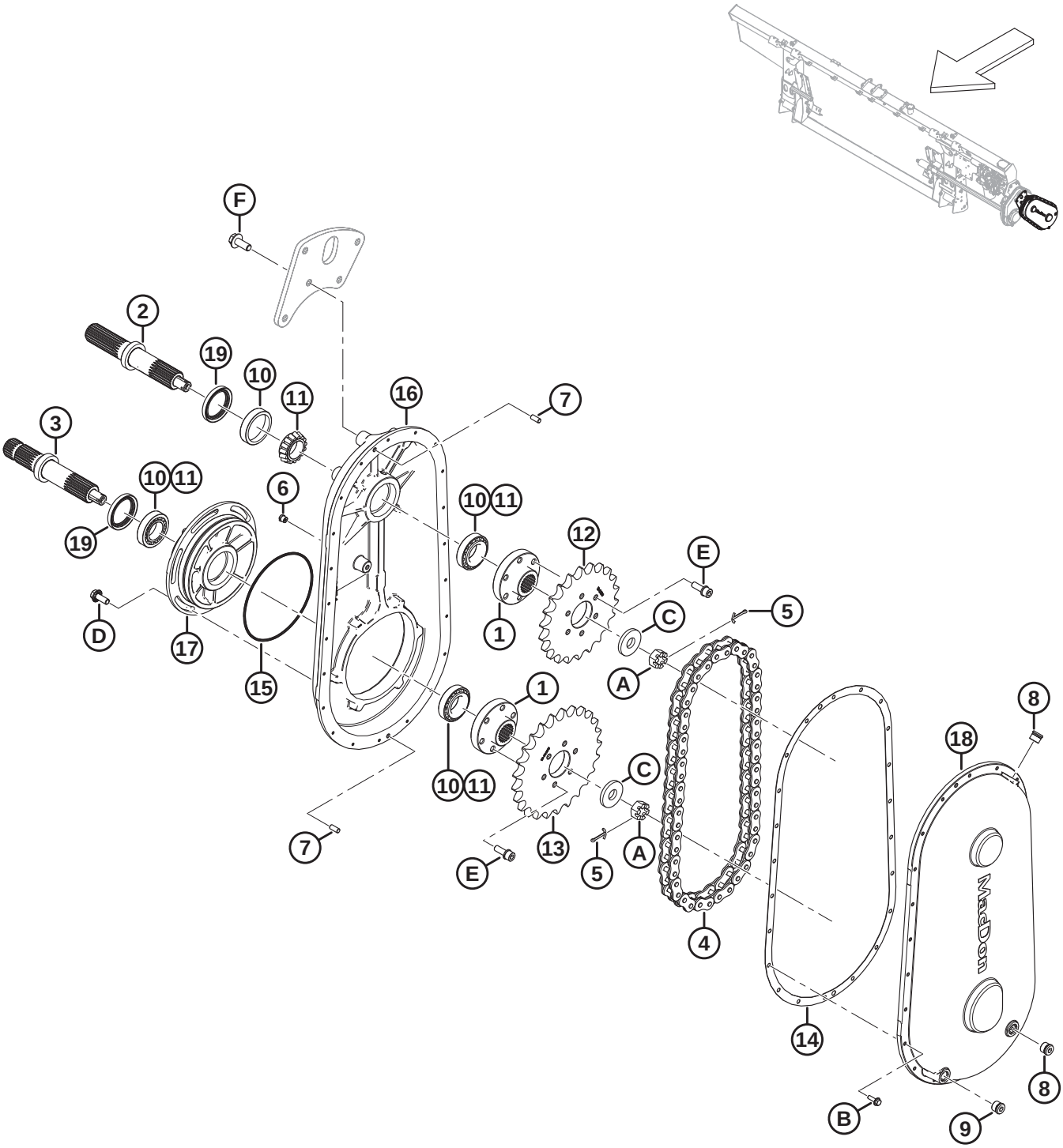

INPUT DRIVE ASSEMBLY

Ref	Part Number	Description	Qty	Serial Number
	B7041	KIT – CNH INPUT DRIVE SPROCKETS [651]		
	308726	DRIVE – INPUT (CNH) [652]		
1	328203	HUB – SPLINED	2	
2	328202	SHAFT – OUTPUT	1	
3	328201	SHAFT – INPUT	1	
4	328120	CHAIN – RC80 50 PT ENDLESS	1	
5	18607	PIN – COTTER 5/32 DIA X 1.5 ZP	2	
6	328176	BREATHER – 1/8-27 NPT	1	
7	NSS	PIN – DOWEL	2	
8	328152	PLUG – M18 ORB	2	
9	328154	PLUG – M18 ORB MAGNETIC	1	
10	30701	BEARING – CUP	4	
11	30702	BEARING – CONE	4	
12	308852	SPROCKET – 80A22 (CNH)	1	
13	308848	SPROCKET – 80A25 (CNH)	1	
14	328200	GASKET – DRIVE	1	
15	328199	O-RING – #260	1	
16	328198	HOUSING – GEARBOX	1	
17	328197	HOUSING – ECCENTRIC	1	
18	328196	COVER – GEARBOX	1	
19	187477	SEAL	2	
A	5512	NUT – HEX SLOTTED .750-16 UNF ZN PL		
B	328156	BOLT – SERRATED FLANGE		
C	6647	WASHER – FLAT		
D	135783	BOLT – HEX FLG HD TFL M10 X 1.5 X 25-10.9-AA1J		
E	328183	BOLT – M10 X 1.25 X 30 SEMS		
F	320180	BOLT – HEX FLG HD M12 X 1.75 X 30-SPCL-8.8-AA1J		

651. The kit includes gasket (MD #328200), chain (MD #328120), sprockets (MD #308848, MD #308852), and instructions. Kits are available through Whole Goods only.
652. Used with Case and New Holland combines.

156 Input Driveline and Support

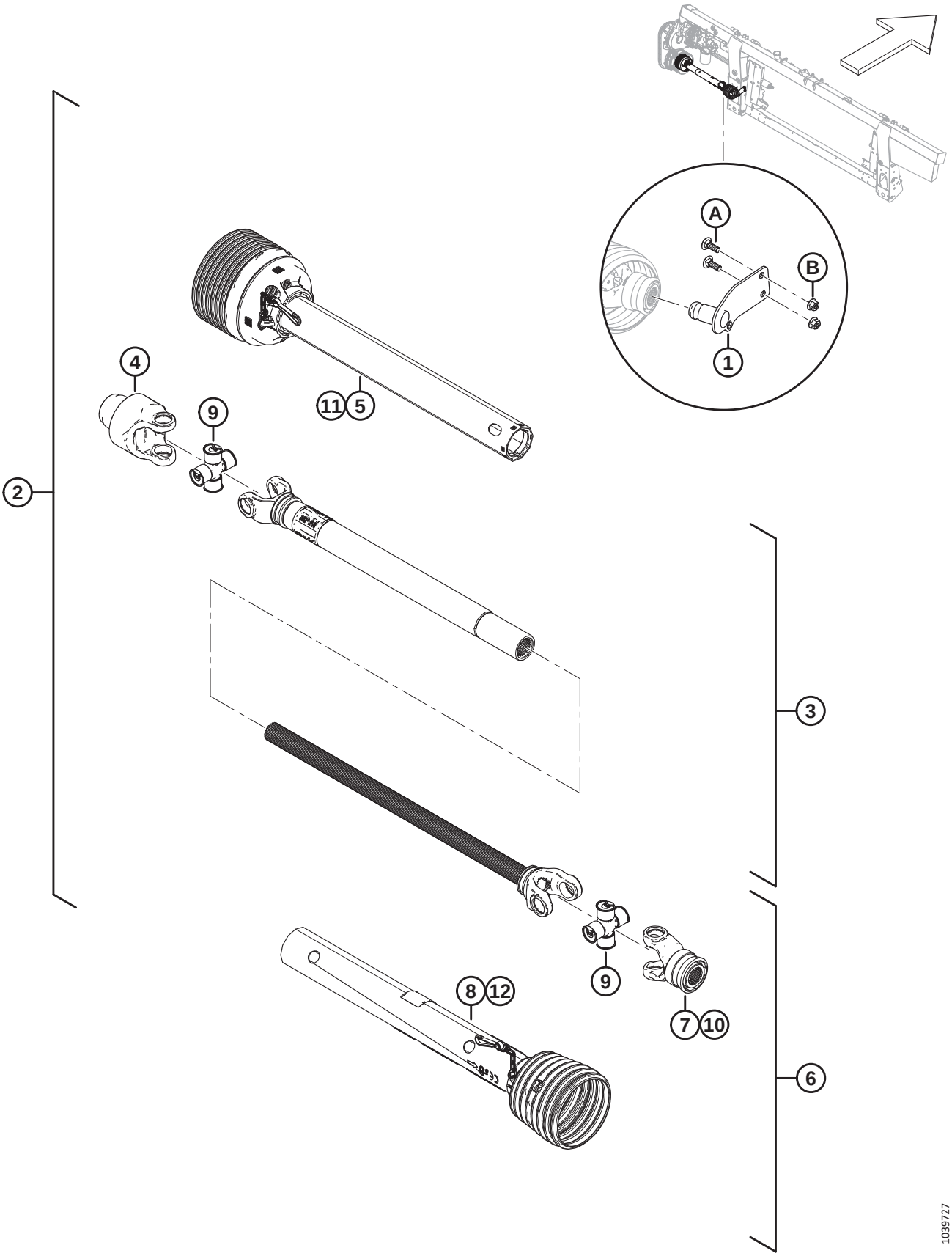

INPUT DRIVELINE AND SUPPORT

Ref	Part Number	Description	Qty	Serial Number
	B7038	KIT – 6 TOOTH SPLINE CE DRIVELINE [653]	1	
	B7039	KIT – 21 TOOTH SPLINE CE DRIVELINE [654]	1	
1	322486	SUPPORT WELDT – 6T PTO STORAGE [655]	1	
	322456	SUPPORT WELDT – 21T PTO STORAGE [656]	1	
2	314173	DRIVELINE – 6T SPLINE [657]	1	
	314174	DRIVELINE – 1.375 IN 21T SPLINE CE [658]	1	
3	322915	DRIVELINE – IMPLEMENT HALF	1	
4	133631	YOKE – FREE MOTION	1	
5	322916	DRIVELINE – IMPLEMENT GUARD	1	
6	322926	DRIVELINE – 6T COMBINE HALF [655]	1	
	322924	DRIVELINE – 21T COMBINE HALF [656]	1	
7	133634	YOKE – 6T [655]	1	
	322925	YOKE – 21T [656]	1	
8	322917	DRIVELINE – COMBINE END GUARD	1	
9	142777	CROSS JOURNAL KIT	2	
10	40095	KIT – REPAIR	1	
11	322918	INNER GUARD REPAIR KIT [659]	1	
12	220766	SHIELD REPAIR KIT CE [659]	1	
	36651	DECAL – DANGER		
	194521	DECAL – WARNING		
	30316	DECAL – DANGER		
A	184662	BOLT – RHSN TFL M10 X 1.5 X 30-8.8-AA1J		
B	135799	NUT – HEX FLG CTR LOC M10 X 1.5-10		

653. 6-tooth splined driveline kit for Case and New Holland combines. Kits are available through Whole Goods only.
654. 21-tooth splined driveline kit for Case and New Holland combines. Kits are available through Whole Goods only.
655. For 6-tooth spline driveline.
656. For 21-tooth spline driveline.
657. 6-tooth splined driveline kit for Case and New Holland combines.
658. 21-tooth splined driveline kit for Case and New Holland combines.
659. The kit includes chain kit, bearing, lock seal, and instructions.

157 Input Driveline and Support – High Angle

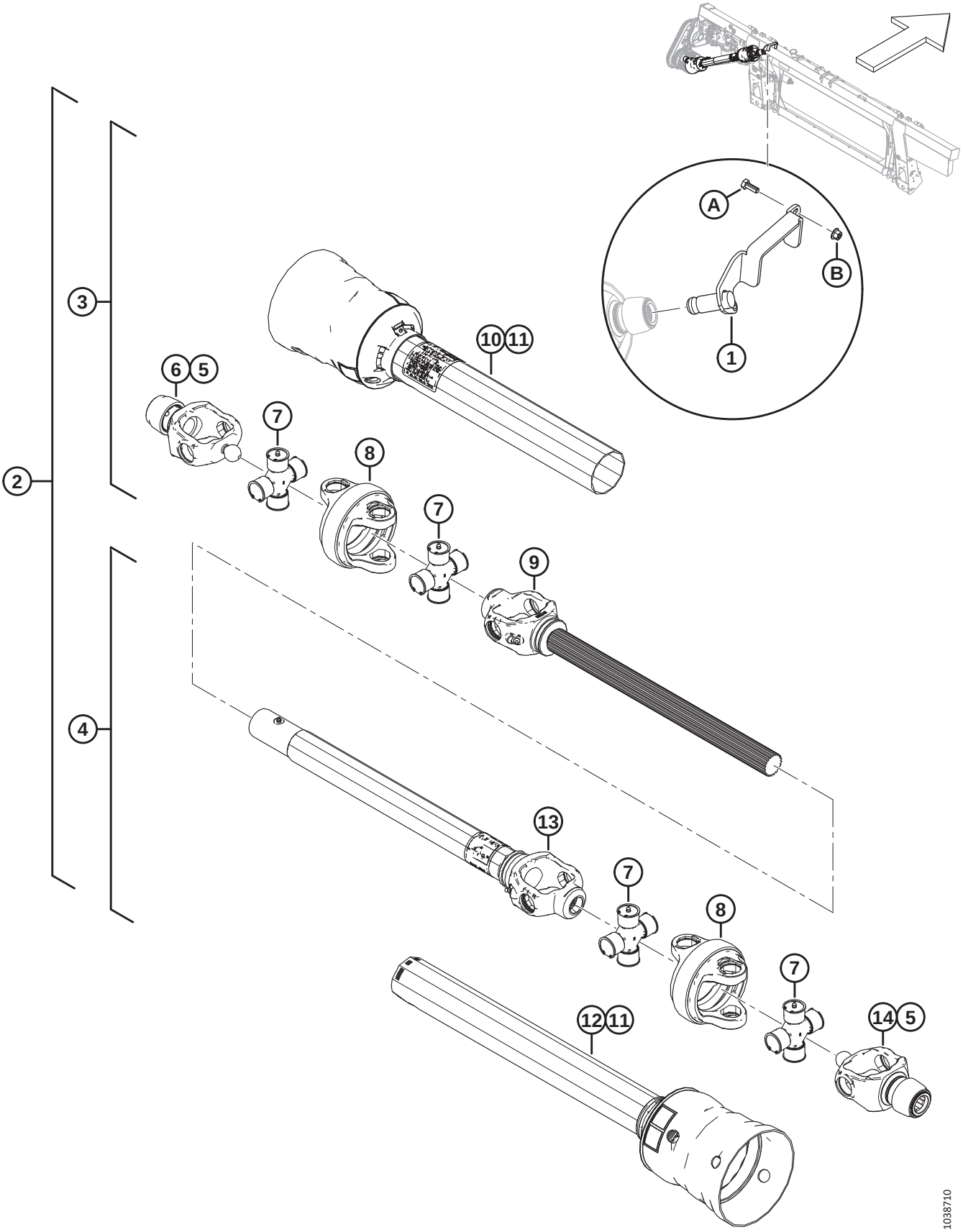

INPUT DRIVELINE AND SUPPORT – HIGH ANGLE

Ref	Part Number	Description	Qty	Serial Number
	B7180	KIT – 6T LONG HI-ANGLE DRIVESHAFT [660]		
	B7181	KIT – 21T LONG HI-ANGLE DRIVESHAFT [661]		
	B7326	KIT – 21T MID HI-ANGLE DRIVESHAFT [662]		
1	357064	SUPPORT WELDT – 6T PTO STORAGE [663]	1	
	357012	SUPPORT WELDT – 21T PTO STORAGE [664]	1	
2	322996	DRIVELINE – 6T HIGH ANGLE	1	
	322997	DRIVELINE – 21T HIGH ANGLE LONG	1	
3	337709	DRIVELINE – 6T SHAFT HALF, GUARDED [663]	1	
	337707	DRIVELINE – 21T SHAFT HALF, GUARDED [665]	1	
4	337723	DRIVELINE – 21T TUBE HALF, GUARDED [666]	1	
	337727	DRIVE – 21T TUBE HALF, GUARDED [667]	1	
5	133632	KIT – AUTO LOK REPAIR	2	
6	337711	YOKE – 21T CV	1	
7	337712	CROSS KIT	4	
8	337715	HOUSING CV	2	
9	337716	DRIVELINE – CV YOKE AND SHAFT [668]	1	
10	337717	DRIVELINE – OUTER GUARD	1	
11	337718	DRIVELINE – GUARD REPAIR KIT	2	
12	337720	DRIVELINE – INNER GUARD [666]	1	
	337731	DRIVELINE – INNER GUARD [667]	1	
13	337721	DRIVELINE – YOKE TUBE AND SLEEVE [666]	1	
	337732	DRIVELINE – YOKE TUBE AND SLEEVE [667]	1	
14	337722	6T YOKE CV [663]	1	
	337711	21T YOKE CV [664]	1	
	30316	DECAL – DANGER		
	36651	DECAL – DANGER		

660. Long 6-tooth splined driveline kit for Case and New Holland wide and narrow combines, Sidehill (18%) and Hillside (27%) configurations. Kits are available through Whole Goods only.
661. Long 21-tooth splined driveline kit for Case and New Holland wide and narrow combines, Sidehill (18%) and Hillside (27%) configurations. Kits are available through Whole Goods only.
662. Mid 21-tooth splined driveline kit for Case and New Holland wide and narrow combines with Everest package, and Case and New Holland Hillco Hillside Beaterless (27%) package. Kits are available through Whole Goods only.
663. For long 6-tooth spline drivelines.
664. For 21-tooth spline drivelines.
665. For mid and long 21-tooth spline drivelines.
666. For long 6-tooth and long 21-tooth spline drivelines.
667. For mid 21-tooth spline drivelines.
668. For long 6-tooth, and mid and long 21-tooth spline drivelines.

INPUT DRIVELINE AND SUPPORT – HIGH ANGLE

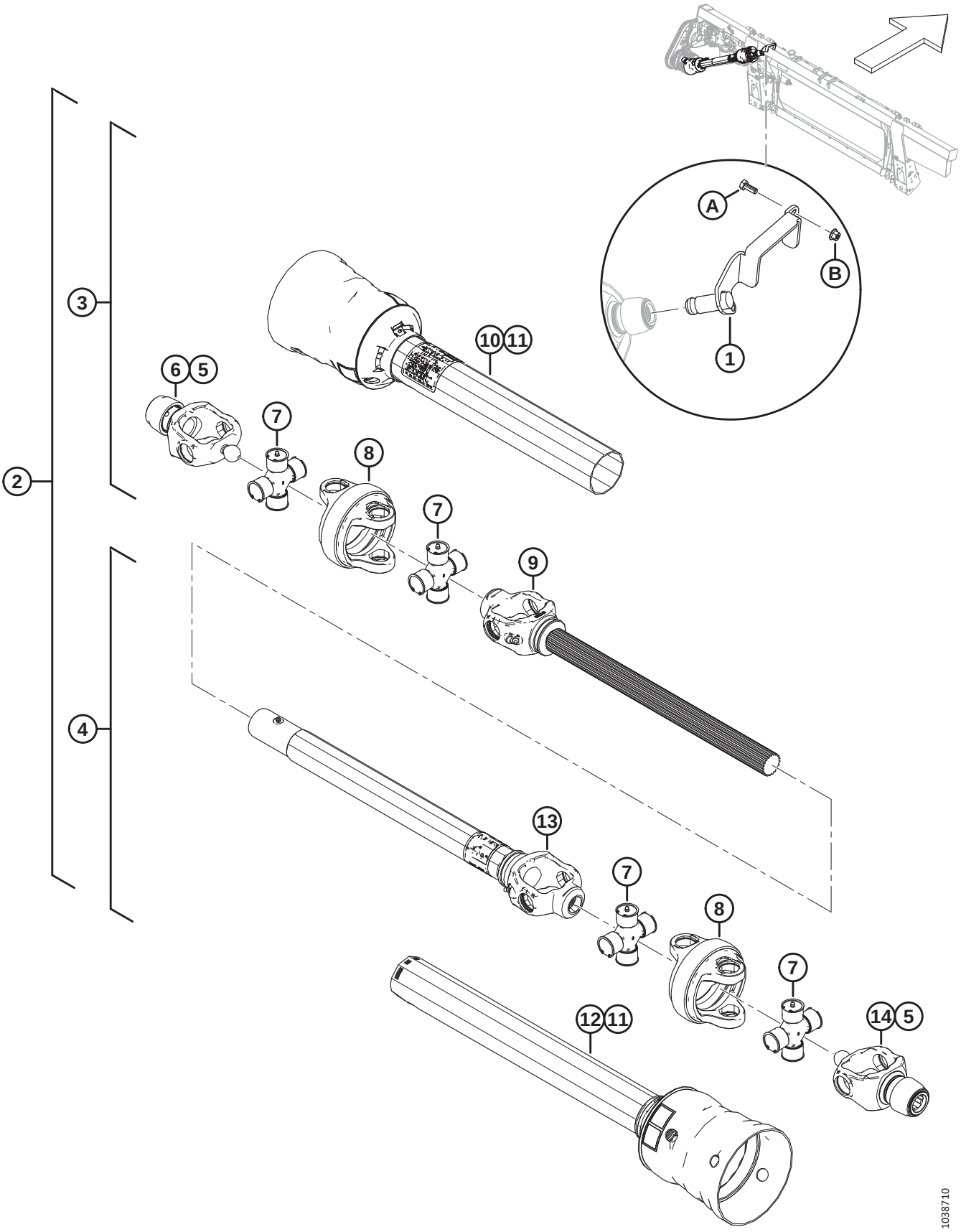

Ref	Part Number	Description	Qty	Serial Number
A	30627	BOLT – HEX HD TFL M10 X 1.5 X 25-8.8-A3L		
B	135799	NUT – HEX FLG CTR LOC M10 X 1.5-10		

158 Input Driveline Conversion Kits

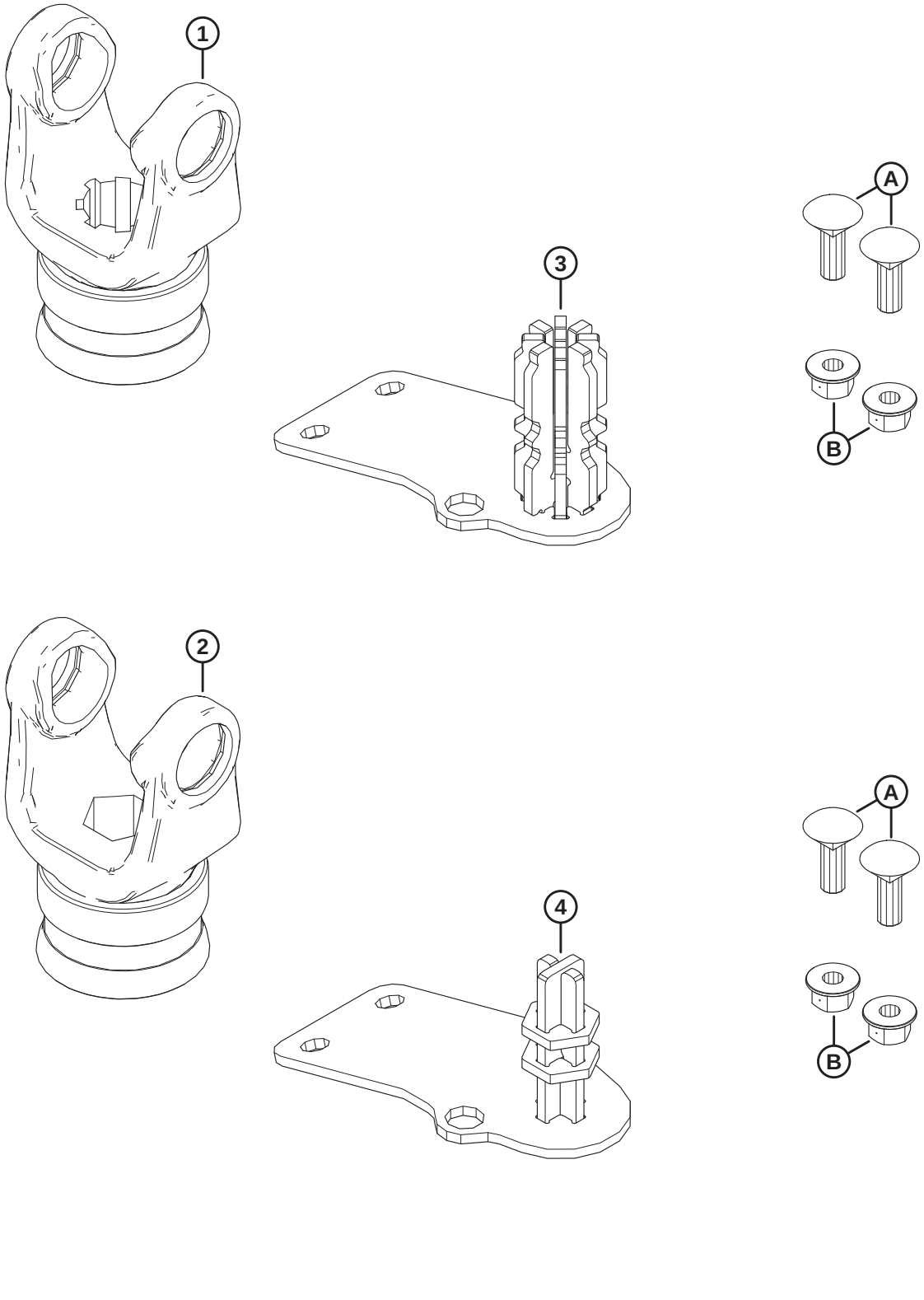

INPUT DRIVELINE CONVERSION KITS

Ref	Part Number	Description	Qty	Serial Number
	B7312	KIT – 8T DRIVESHAFT FM200 CONV [669]		
	B7317	KIT – HEX DRIVESHAFT FM200 CONV [669]		
1	314657	YOKE – 8T [670]	1	
2	133641	YOKE – HEX [671]	1	
3	337117	STORAGE WELDT – 8T [670]	1	
4	347722	STORAGE WELDT – HEX [671]	1	
A	184662	BOLT – RHSN TFL M10 X 1.5 X 30-8.8-AA1J		
B	135799	NUT – HEX FLG CTR LOC M10 X 1.5-10		

669. Kits are available through Whole Goods only.
670. Included in 8-tooth spline driveshaft conversion kit (B7312).
671. Included in hex driveshaft conversion kit (B7317).

159 Auger Drum and Internal Components

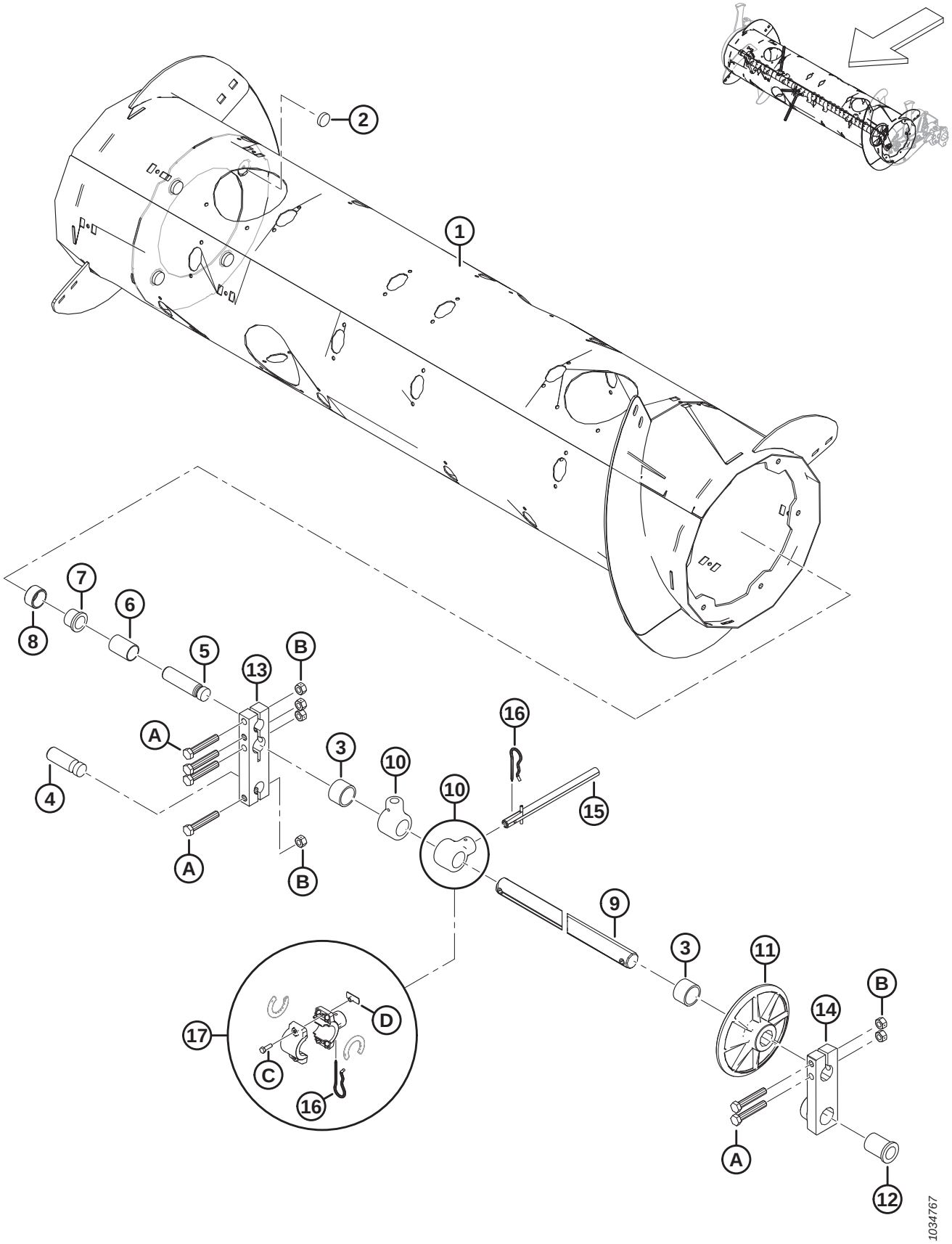

AUGER DRUM AND INTERNAL COMPONENTS

Ref	Part Number	Description	Qty	Serial Number
	322372	ASSEMBLY – FEED AUGER [672]		
1	322397	DRUM – WELDMENT	1	
2	328420	MAGNET – ROUND	4	
3	322770	SPACER TUBE – PLASTIC	2	
4	314062	PIN – PIVOT	1	
5	213660	PIN – PIVOT	1	
6	213657	SPACER	1	
7	133877	BUSHING – PLASTIC FLANGED 1.0 IN.	1	
8	213656	ROLLER	1	
9	308536	SHAFT – FINGER	1	
10	337206	HOLDER – AUGER FINGER	30	
11	248117	WHEEL, GUIDE – FINGERSHAFT	1	
12	248145	BUSHING – FLANGE	1	
13	213608	BLOCK – AUGER SHAFT	1	
14	248538	CASTING – PIVOT BLK, LH, MACH	1	
15	337152	KIT – FINGER [673]	22	
	7642	PIN – SPRING 3/16 DIA X 1.5 LG	A/R	
16	123180	PIN – HAIR	22	
17	276839	KIT – FINGER HOLDER SPLIT 5X (BAG OF 5) [674]	A/R	
A	184675	BOLT – HEX HD M12 X 1.75 X 70-8.8-AA1J		
B	136759	NUT – HEX CTR LOC M12 X 1.75-8-AA1J		
C	252703	BOLT – HEX HD TFL M6 X 1 X 20 X SPCL-12.9-AF0C		
D	197263	NUT – TEE M6 X 1		

672. The complete feed auger assembly includes all listed parts in Section *159 Auger Drum and Internal Components, page 435*, Section *160 Auger Assembly – Right Arm, page 437*, and Section *161 Auger Assembly – Left Arm, page 441*.
673. The finger kit includes solid finger (not sold separately), spring pin (MD #7642), guide (MD #337143), and instructions.
674. The split finger holder kit is used to simplify field replacement of broken one-piece solid finger holders (MD #337206). The kit includes set of five split auger finger holders (NSS), holder spacers (NSS), hair pins (MD #123180), tee nuts (MD #197263), and bolts (MD #252703).

160 Auger Assembly – Right Arm

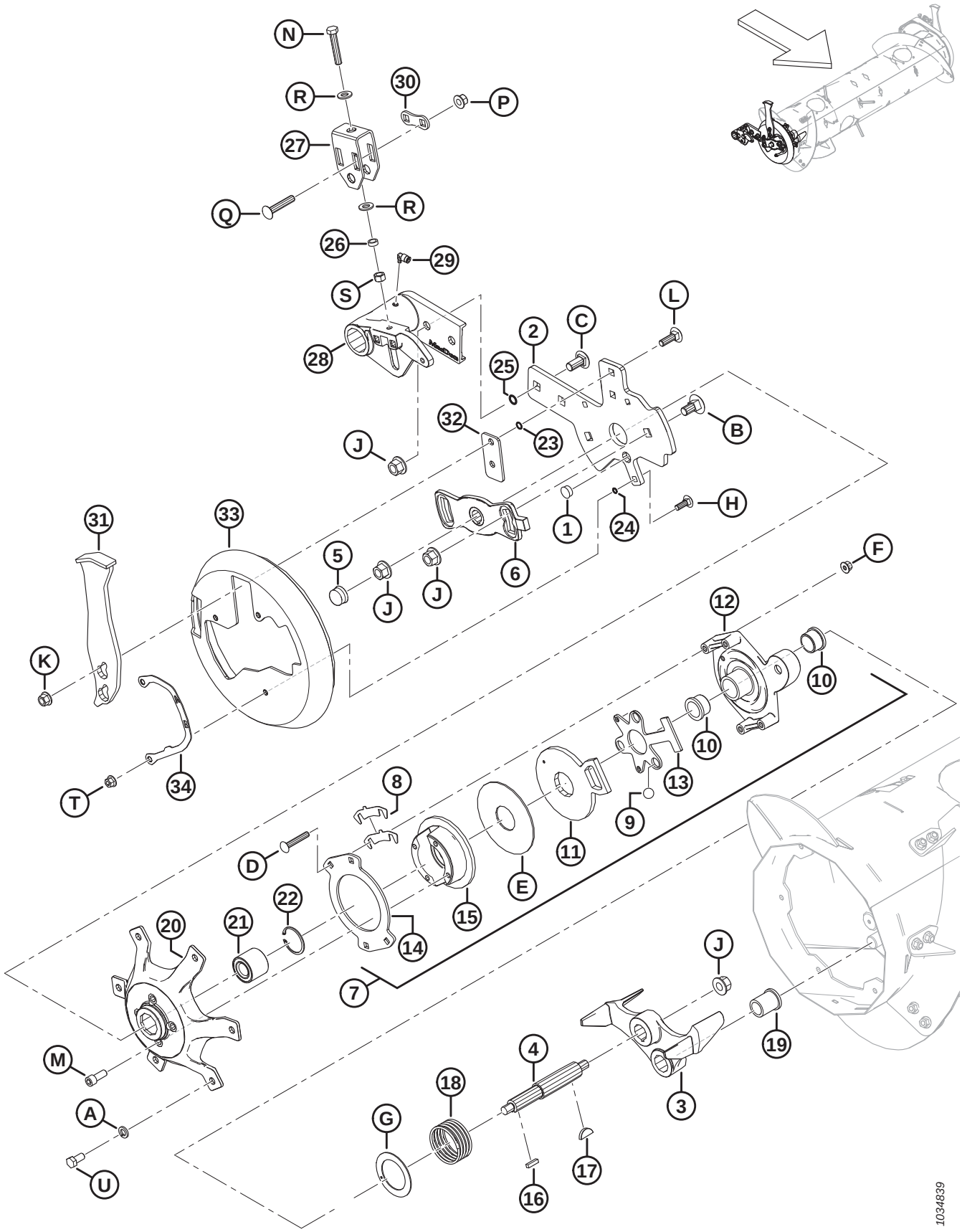

AUGER ASSEMBLY – RIGHT ARM

Ref	Part Number	Description	Qty	Serial Number
1	308859	PLUG – HOLE	1	
2	308850	BAR – RH AUGER SUPPORT	1	
3	304520	CASTING – STOP, MACHINING	1	
4	304514	SHAFT – AUGER	1	
5	276140	CAP – PLASTIC	1	
6	213851	CASTING – TIMING PLATE, MACH	1	
7	213802	ASSEMBLY – REVERSING CLUTCH [675]	1	
8	276206	SHIM CLUTCH	4	
9	248285	BALL	3	
10	213859	BUSHING – PLASTIC 1.25 X 1.5 X 1.0	2	
11	213801	ARM, CLUTCH ACTIVATOR – MACH	1	
12	213649	CAST, CLUTCH HOUSING – MACH	1	
13	337124	PLATE – BALL CAGE	1	
14	213554	DISC – CLUTCH	1	
15	213552	DISC, BRAKE – MACHINING	1	
16	213750	KEY, RECT – 6.35 MM SQ 25.5 MM LG	1	
17	213654	KEY – WOODRUFF 1/4 X 1-1/4	1	
18	213679	SPRING – COMPRESSION	1	
19	213659	BUSHING – FLANGE	1	
20	213546	HUB MACHINING RH	1	
21	337284	BEARING – DOUBLE ROW BALL, 52MM OD	1	
22	21235	RING – INT RETAINING	1	
23	183508	O-RING – 1.78 X 10.82	2	
24	183506	O-RING – 1.78 X 7.65	3	
25	50083	O-RING – Ø2.62 X Ø13.94	2	
26	314169	SPACER	1	
27	314136	BRACKET – ADJUSTER	1	
28	308538	PIVOT – RH AUGER, MACHINING	1	
29	301427	FITTING – QUICK DC, 90 DEG	1	
30	187428	SPACER	1	
31	308648	BUMPER – WELDMENT	1	
32	308056	PLATE – SPACER	1	
33	301994	COVER – AUGER END CAP RH	1	
34	276180	PLATE – INDICATOR RH	1	
A	18638	WASHER – REG. LOCK 1/2 IN. NOM. ID AA1J		

675. The reversing clutch assembly includes parts #8–15 and hardware (MD #252701, MD #213731, and MD #135799).

AUGER ASSEMBLY – RIGHT ARM

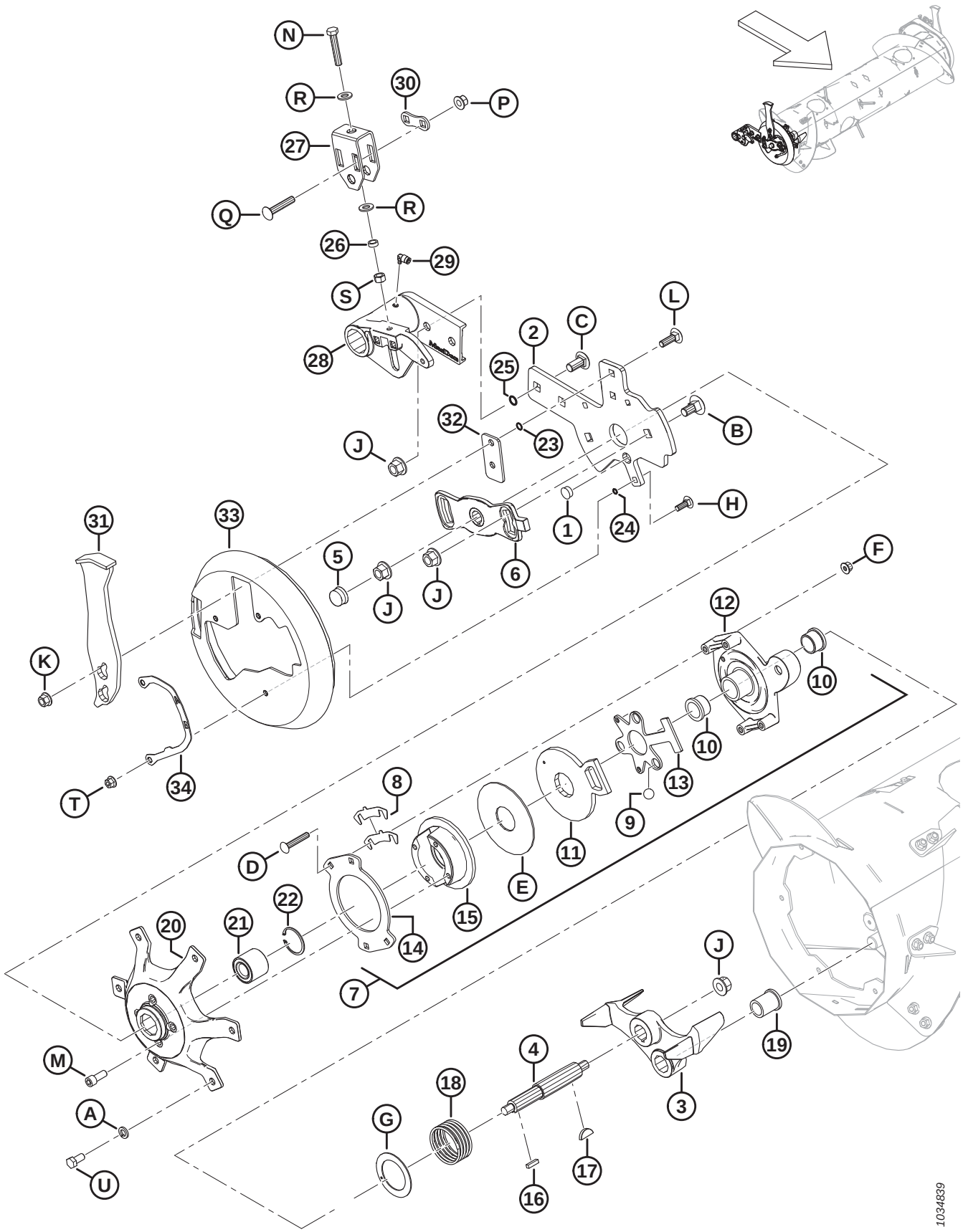

AUGER ASSEMBLY – RIGHT ARM

Ref	Part Number	Description	Qty	Serial Number
B	252691	BOLT – RHSN M16 X 2 X 35-10.9-AA1J		
C	252638	BOLT – RHSSN M16 X 2 X 35-8.8-AA1J		
D	252701	BOLT – RHSSN TFL M10 X 1.5 X 60-8.8-AA1J		
E	213731	WASHER – PLASTIC		
F	135799	NUT – HEX FLG CTR LOC M10 X 1.5-10		
G	213733	WASHER – THRUST		
H	184662	BOLT – RHSN TFL M10 X 1.5 X 30-8.8-AA1J		
J	136440	NUT – HEX FLG CTR LK M16 X 2-10-AA1J		
K	136431	NUT – HEX FLG CTR LOC M12 X 1.75-10		
L	135900	BOLT – RHSN TFL M12 X 1.75 X 40-8.8-ZINC		
M	50154	SCREW – HEX SOC HD TFL M12 X 1.75 X 30-8.8-AA1J		
N	252541	BOLT – HEX HD TFL M12 X 1.75 X 65-8.8-AA3L		
P	252188	NUT – HEX FLG CTR LK M12 X 1.5-10-AA1J		
Q	252187	BOLT – RHSSN M12 X 1.5 X 65-10.9-AA1J		
R	135369	WASHER – HARDENED ASTM F436 1/2		
S	135156	NUT – HEX M12 X 1.75-10-AA1J		
T	136441	NUT – HEX SER FLG M10 X 1.5-8-AA1J		
U	50155	BOLT – HEX HD TFL M12 X 1.75 X 25-8.8-AA1J		

161 Auger Assembly – Left Arm

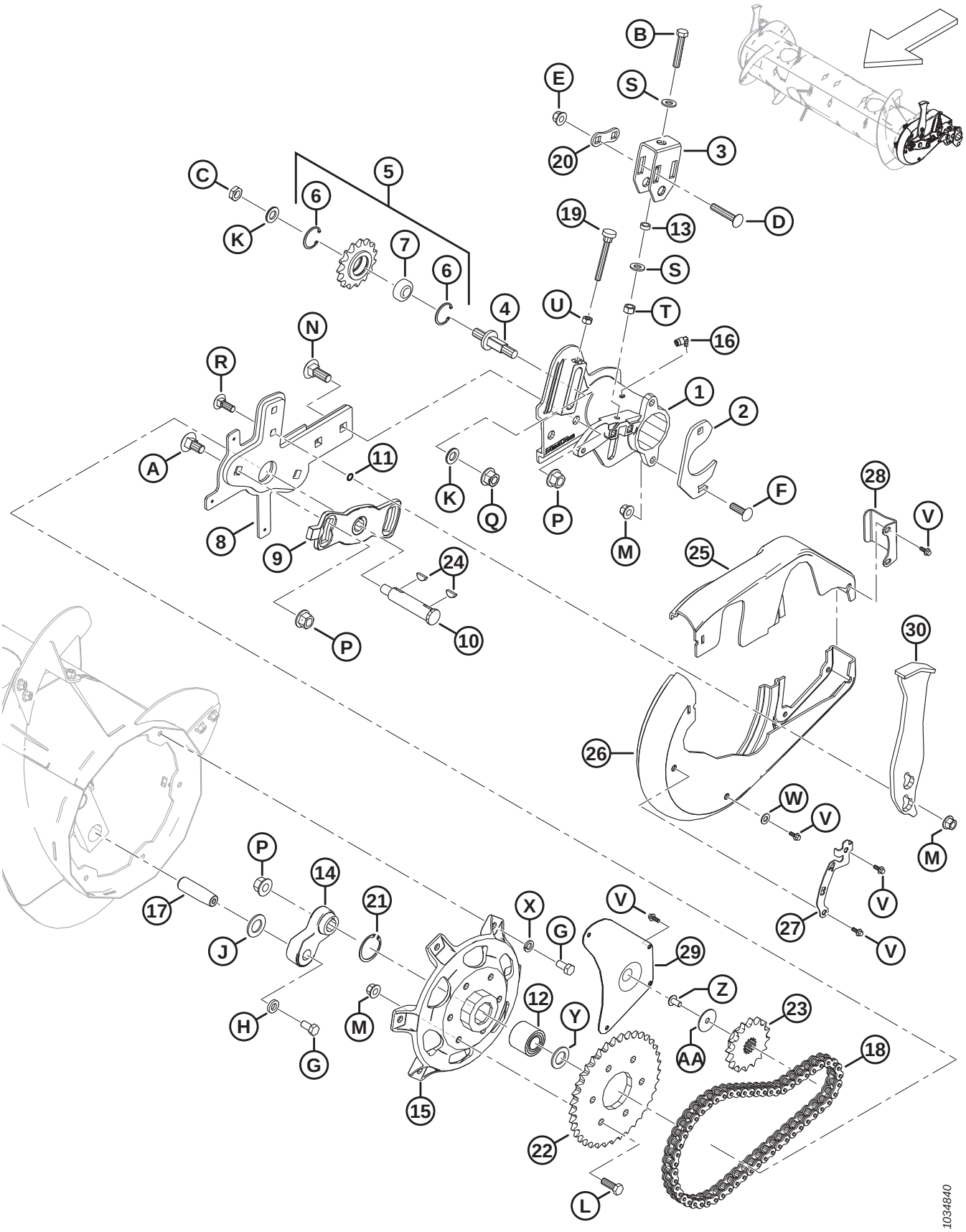

AUGER ASSEMBLY – LEFT ARM

Ref	Part Number	Description	Qty	Serial Number
1	322377	PIVOT – LH AUGER, MACHINING	1	
2	248388	CLAMP – PLATE	1	
3	314136	BRACKET – ADJUSTER	1	
4	213420	SPINDLE – THREADED ADJUSTMENT	1	
5	9333	ASSEMBLY – SPROCKET [676]	1	
6	795	RING – RETAINING	2	
7	9213	BEARING – BALL	1	
8	304931	ARM – LH AUGER SUPPORT WELDT	1	
9	213851	CASTING – TIMING PLATE, MACH	1	
10	301441	SHAFT – AUGER	1	
11	183508	O-RING – 1.78 X 10.82	2	
12	337284	BEARING – BALL DBL ROW 52 MM O.D. [677]	1	
	337804	KIT – LH RTD HUB WITH BEARING [678]	A/R	
13	314169	SPACER	1	
14	304521	ARM – FINGER SHAFT CRANK MACH	1	
15	337276	HUB – MACHINING [677]	1	
	337804	KIT – LH RTD HUB WITH BEARING [678]	A/R	
16	301427	FITTING – QUICK DC, 90 DEG	1	
17	248144	PIN – PIVOT	1	
18	220317	CHAIN – RC-60H, 56 PITCHES RIVETED, ENDLESS	1	
19	213857	THUMBSCREW – M10 X 80	1	
20	187428	SPACER	1	
21	21235	RING – INT. RETAINING (2021 AND LATER) [677]	1	
	181649	RING – RETAINING INTERNAL (2020 AND PRIOR) [679]	A/R	
22	151793	SPROCKET – RC 60 A 37 T	1	
23	151691	SPROCKET – RC 60 B 16 T	1	
24	135290	KEY – WOODRUFF (1/4 X 7/8 NOM.)	2	
25	301993	COVER – LH AUGER, SMALL HALF	1	
26	301992	COVER – LH AUGER, LARGE HALF	1	
27	276183	PLATE – INDICATOR LH	1	
28	213112	PLATE – COVER RETAINER	1	
29	213110	PANEL – ACCESS	1	
30	308648	BUMPER – WELDMENT	1	

676. The sprocket assembly includes sprocket (NSS), ball bearing (MD #9213), and two retaining rings (MD #795).
677. For model year 2021 and later.
678. Kit is used to service machines made prior to model year 2021. The kit includes hub (MD #337276), bearing (MD #337284), retaining ring (MD #21235), flat washer (MD #123406), and instructions.
679. Retaining ring (MD #181649) is used to service machines made prior to model year 2021.

AUGER ASSEMBLY – LEFT ARM

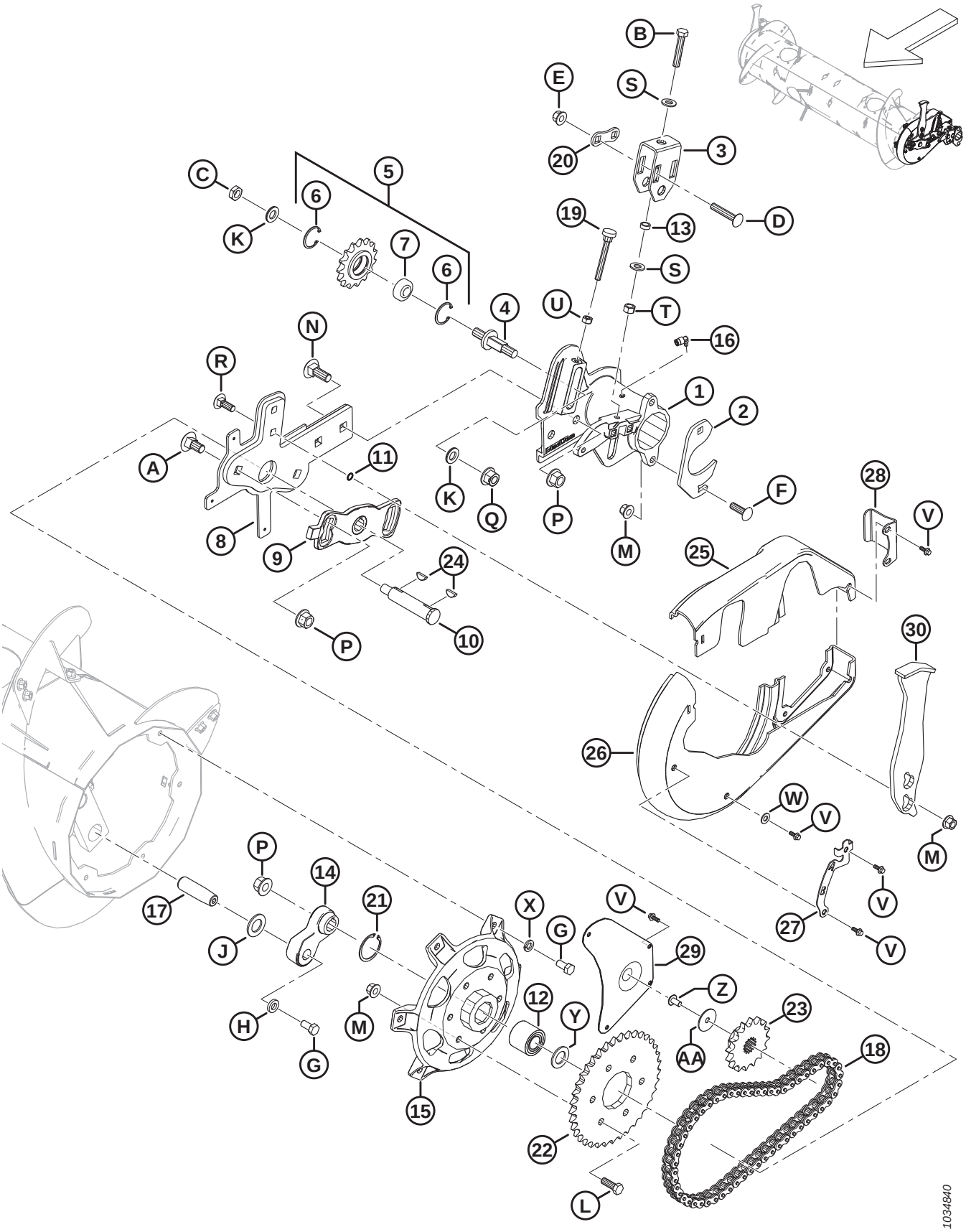

AUGER ASSEMBLY – LEFT ARM

Ref	Part Number	Description	Qty	Serial Number
A	252691	BOLT – RHSN M16 X 2 X 35-10.9-AA1J		
B	252541	BOLT – HEX HD TFL M12 X 1.75 X 65-8.8-AA3L		
C	252288	NUT – HEX THIN FINE M16 X 1.5-04-AA1J		
D	252187	BOLT – RHSSN M12 X 1.5 X 65-10.9-AA1J		
E	252188	NUT – HEX FLG CTR LK M12 X 1.5-10-AA1J		
F	197122	BOLT – RHSSN M12 X 1.75 X 40-8.8-AA1J		
G	50155	BOLT – HEX HD TFL M12 X 1.75 X 25-8.8-AA1J		
H	187518	WASHER – FLAT		
J	156743	WASHER – FLAT		
K	172558	WASHER – NORDLOCK 5/8 IN.		
L	152730	BOLT – HEX HD TFL M12 X 1.75 X 35-10.9-AA1J		
M	136431	NUT – HEX FLG CTR LOC M12 X 1.75-10		
N	136757	BOLT – RHSN M16 X 2 X 45-8.8-AAJ1		
P	136440	NUT – HEX FLG CTR LK M16 X 2-10-AA1J		
Q	136736	NUT – HEX FLG TOP LOCK M16 X 1.5-10-AA2L		
R	136291	BOLT – RHSN TFL M12 X 1.75 X 35-8.8-ZINC		
S	135369	WASHER – HARDENED ASTM F436 1/2		
T	135156	NUT – HEX M12 X 1.75-10-AA1J		
U	30505	NUT – HEX M10 X 1.5-10-AA1J		
V	252639	BOLT – HEX FLG HD M6 X 1 X 16 X SPCL-8.8-AA2L		
W	18598	WASHER – FLAT SAE 13/32 ID X 13/16 IN OD AA1J		
X	18638	WASHER – REG. LOCK 1/2 IN. NOM. ID AA1J		
Y	123406	WASHER – FLAT [677]		
Z	135157	SCREW – MACHINE		
AA	31465	WASHER – FLAT		

162 Auger – Float Linkage

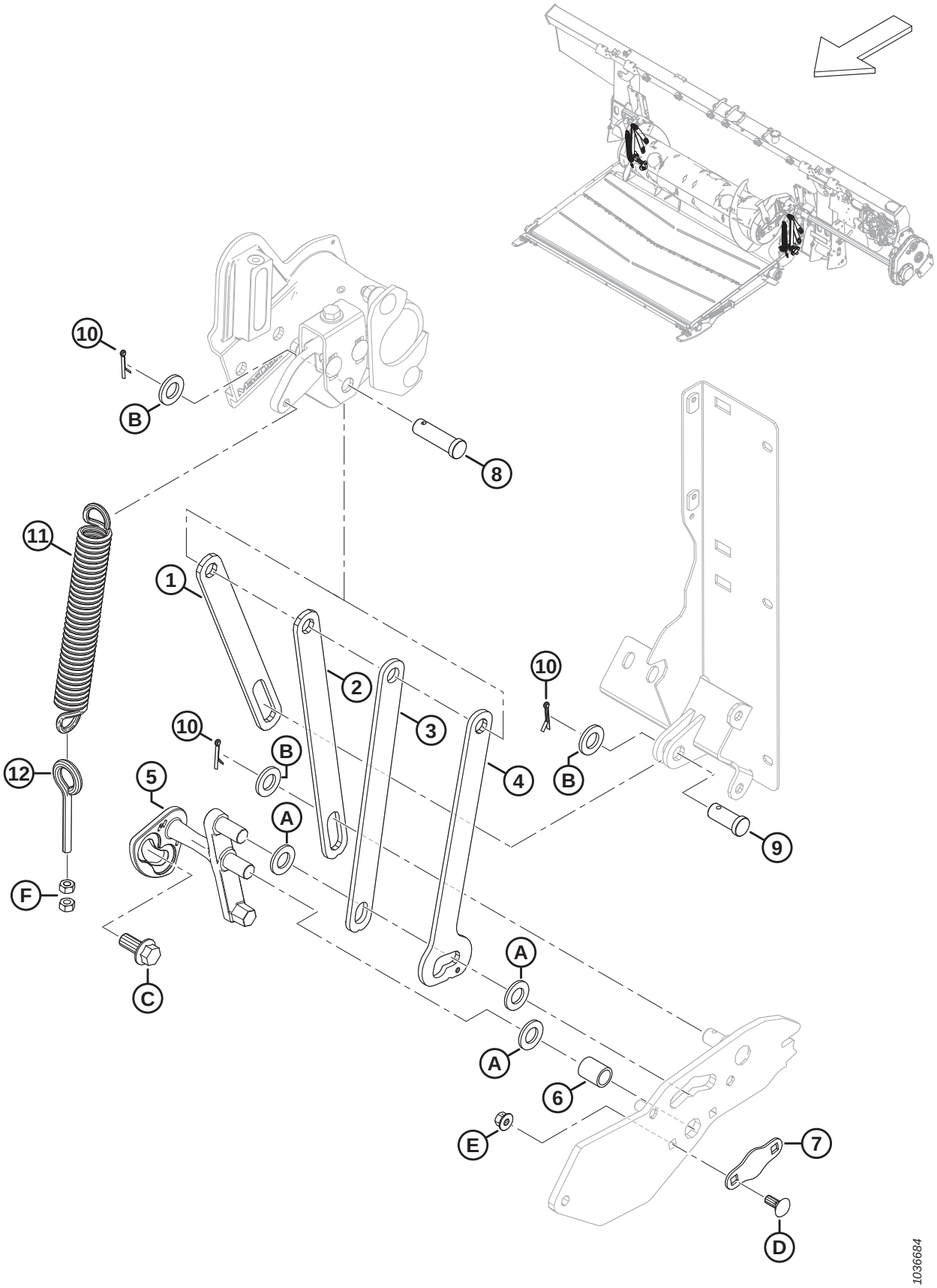

AUGER – FLOAT LINKAGE

Ref	Part Number	Description	Qty	Serial Number
1	322914	BAR – AUGER SUPPORT, LIMITER	2	
2	301805	BAR – AUGER SUPPORT, REAR	2	
3	301806	BAR – AUGER SUPPORT, FRONT	2	
4	301807	BAR – AUGER SUPPORT DUAL POSITION	2	
5	337362	LEVER – LH CRANK LOCK, MACHINED	1	
	337366	LEVER – RH CRANK LOCK, MACHINED	1	
6	248348	TUBE – SPACER	2	
7	248349	PLATE – SECURING	2	
8	322970	PIN – CLEVIS, 50 MM LG	2	
9	11814	PIN – CLEVIS, 30 MM LG	2	
10	18648	PIN – COTTER 3/16 DIA X 1.25 ZP	6	
11	245966	SPRING – EXTENSION	2	
12	231448	EYE BOLT – M10 X 1.5 X 70-4.8-AA1J	2	
A	18601	WASHER – FLAT SAE		
B	112130	WASHER – HARD ASTM F436 3/4 IN. NOM. ID AB0C		
C	136378	BOLT – HEX FLG HD TFL M16 X 2 X 35-10.9		
D	135785	BOLT – RHSN M10 X 1.5 X 25-8.8-AA1J		
E	135799	NUT – HEX FLG CTR LOC M10 X 1.5-10		
F	30505	NUT – HEX M10 X 1.5-10-AA1J		

163 Auger Completion

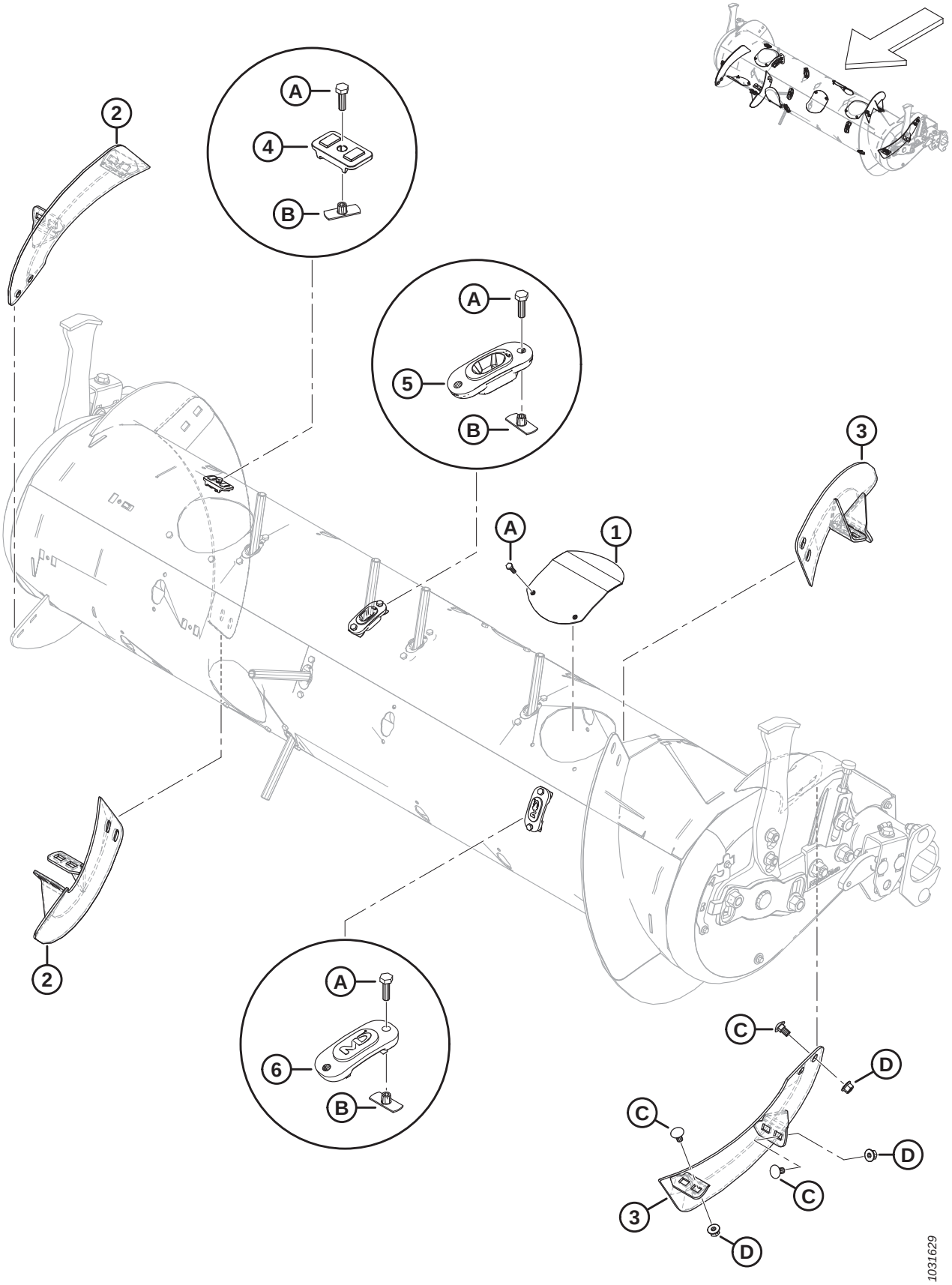

AUGER COMPLETION

Ref	Part Number	Description	Qty	Serial Number
1	304494	COVER WELDMENT	6	
2	287887	FLIGHTING – RH, MEDIUM, HIWEAR	2	
3	287888	FLIGHTING – LH, MEDIUM, HIWEAR	2	
4	213084	PLUG – FLIGHTING SLOT	4	
5	337143	GUIDE	22	
6	187137	PLUG	8	
A	252703	BOLT – HEX HD TFL M6 X 1 X 20 X SPCL-12.9-AF0C		
B	197263	NUT – TEE M6 X 1		
C	136178	BOLT – RHSN M10 X 1.5 X 20-8.8-AA1J		
D	135799	NUT – HEX FLG CTR LOC M10 X 1.5-10		

164 Auger Conversion Kits – Fingers and Flighting

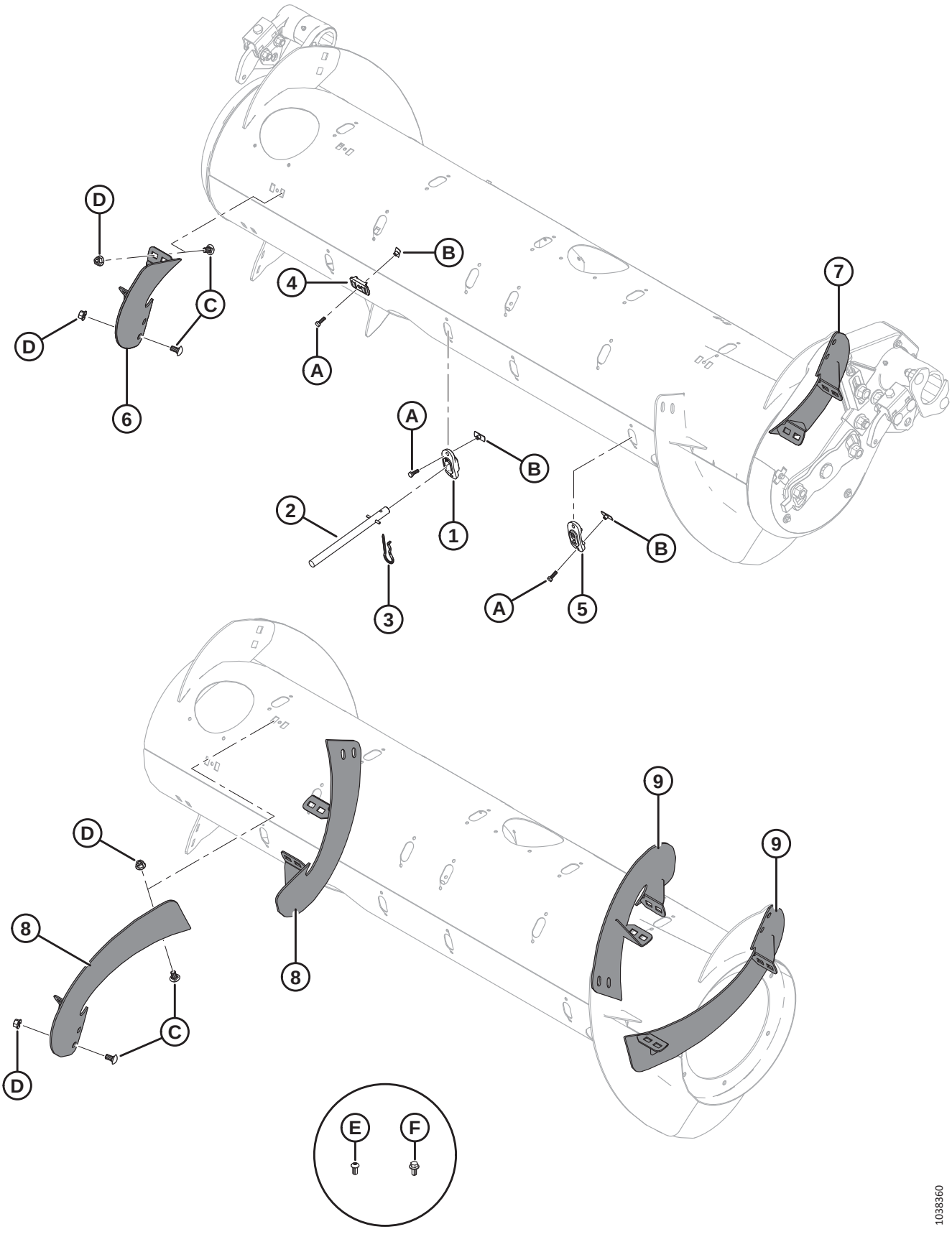

AUGER CONVERSION KITS – FINGERS AND FLIGHTING

Ref	Part Number	Description	Qty	Serial Number
	B7343	KIT – FEED AUGER FINGERS, 4 PCS [680]		
	B7344	KIT – FLIGHTING, SHORT HI-WEAR [681]		
	B7345	KIT – FLIGHTING, LONG HI-WEAR [682]		
	357233	KIT – FLIGHTING, SHORT HI-WEAR [683]		
	357234	KIT – FLIGHTING, LONG HI-WEAR [684]		
1	337143	GUIDE	4	
2	337152	KIT – FINGER [685]	4	
3	123180	PIN – HAIR	4	
4	213084	PLUG – FLIGHTING SLOT	4	
5	187137	PLUG [686]		
6	287887	FLIGHTING, RTD – RH, MED (HI WEAR)	1	
7	287888	FLIGHTING, RTD – LH, MED (HI WEAR)	1	
8	287890	FLIGHTING, RTD – RH, LONG (HI WEAR)	2	
9	287889	FLIGHTING, RTD – LH, LONG (HI WEAR)	2	
A	252703	BOLT – HEX HD TFL M6 X 1 X 20 X SPCL-12.9-AA2L		
B	197263	NUT – TEE M6 X 1		
C	136178	BOLT – RHSN M10 X 1.5 X 20-8.8-AA1J		
D	135799	NUT – HEX FLG CTR LOC M10 X 1.5-10-A3L		
E	135723	SCREW – HEX SOC BTN HD M10 X 1.5 X 20-10.9-AA1J [687]		
F	152655	BOLT – HEX FLG HD M10 X 1.5 X 20-8.8-AA1J [688]		

680. Includes four solid fingers (MD #337152), guides (MD #337143), hair pins (MD #123180), flighting slots plugs (MD #213084), and hardware. Kits are available through Whole Goods only.
681. Includes one pair of short flighting (MD #287887 and MD #287888), four flighting slots plugs (MD #213084), four plugs (MD #187137), and hardware. Kits are available through Whole Goods only.
682. Includes two pairs of long flighting (MD #287889 and MD #287890), twelve plugs (MD #187137), and hardware. Kits are available through Whole Goods only.
683. Includes one pair of short flighting (MD #287887 and MD #287888), four flighting slots plugs (MD #213084), four plugs (MD #187137), hardware, and instructions.
684. Includes two pairs of long flighting (MD #287889 and MD #287890), twelve plugs (MD #187137), hardware, and instructions.
685. Includes solid finger (not sold separately), spring pin (MD #7642), guide (MD #337143), and instructions.
686. Quantities: B7344 = 4; B7345 = 12
687. For Ultra Narrow Configuration only; used on the new holes drilled in the flighting.
688. For Ultra Narrow Configuration only; used on the new holes drilled in the feed auger.

165 Auger – Crop Deflector Kits

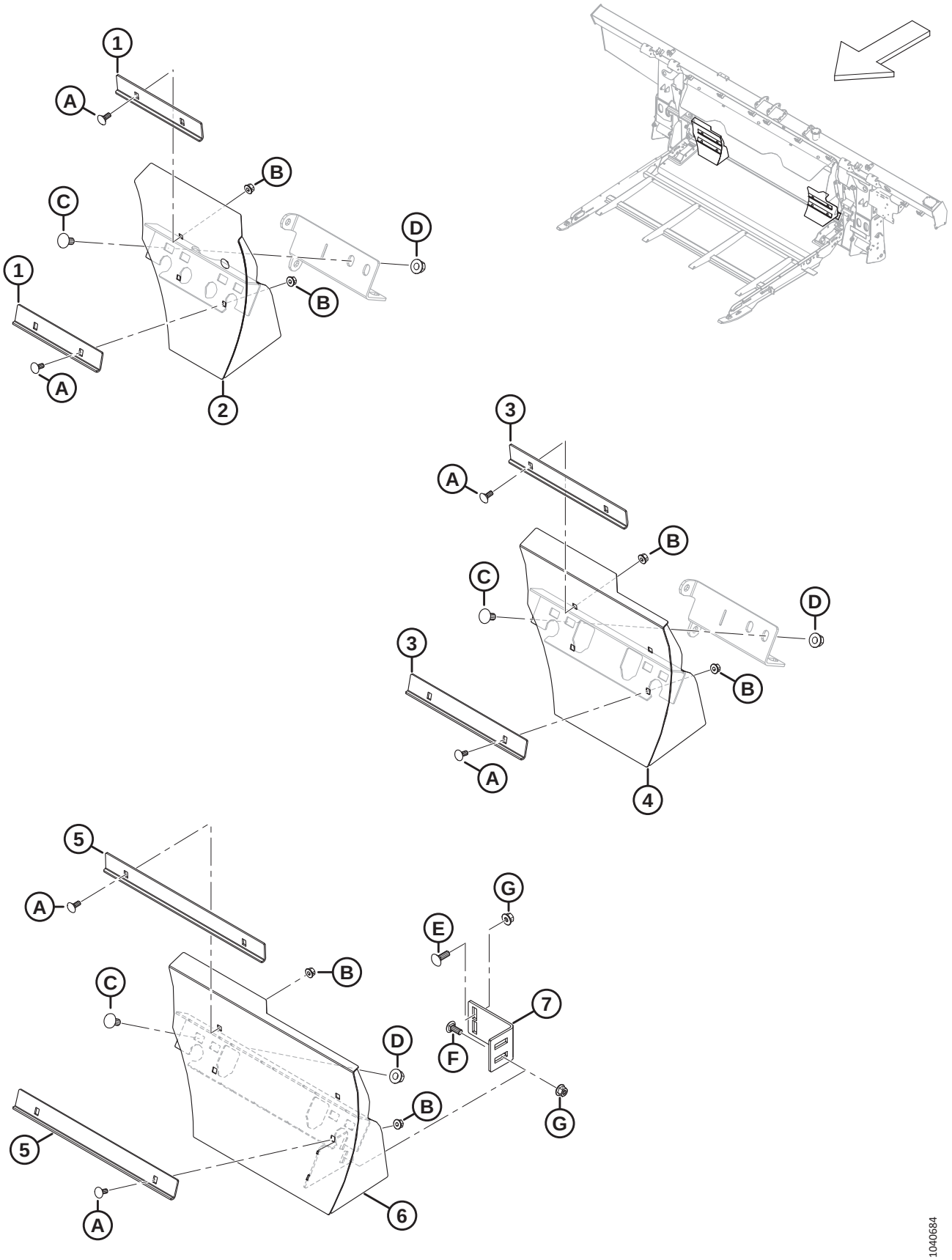

AUGER – CROP DEFLECTOR KITS

Ref	Part Number	Description	Qty	Serial Number
	B7348	KIT – DEFLECTORS, MEDIUM FEED AUGER [689]		
	B7347	KIT – DEFLECTORS, NARROW FEED AUGER [690]		
	B7314	KIT – DEFLECTORS, ULTRA NARROW [691]		
1	314680	ANGLE – SHORT STRIPPER [692]	4	
2	337777	DEFLECTOR – SHORT RH WELDT [692]	1	
	337778	DEFLECTOR – SHORT LH WELDT [692]	1	
3	328085	ANGLE – LONG STRIPPER [693]	4	
4	337779	DEFLECTOR – LONG RH WELDT [693]	1	
	337780	DEFLECTOR – LONG LH WELDT [693]	1	
5	328758	ANGLE – ULTRA LONG STRIPPER [694]	4	
6	328760	DEFLECTOR – ULTRA LONG WELDT RH [694]	1	
	328756	DEFLECTOR – ULTRA LONG WELDT LH [694]	1	
7	328763	FILLER BRACKET [694]	2	
A	197171	BOLT – RHSN M8 X 1.25 X 20-8.8-ZINC		
B	135337	NUT – HEX FLG CTR LK M8 X 1.25-8-AA1J		
C	152439	BOLT – RHSSN M12 X 1.75 X 25-8.8-AA1J		
D	136431	NUT – HEX FLG CTR LOC M12 X 1.75-10		
E	184662	BOLT – RHSN TFL M10 X 1.5 X 30-8.8-AA1J		
F	136506	BOLT – RHSSN M10 X 1.5 X 25-8.8-AA1J		
G	135799	NUT – HEX FLG CTR LOC M10 X 1.5-10		

689. For feeder opening widths of approximately 1317 mm (52 in.). Kits are available through Whole Goods only.
690. For feeder opening widths of approximately 1115 mm (44 in.). Kits are available through Whole Goods only.
691. For feeder opening widths of approximately 896 mm (35 in.). Kits are available through Whole Goods only
692. Included in B7348.
693. Included in B7347.
694. Included in B7314.

166 Auger – Grease Lines

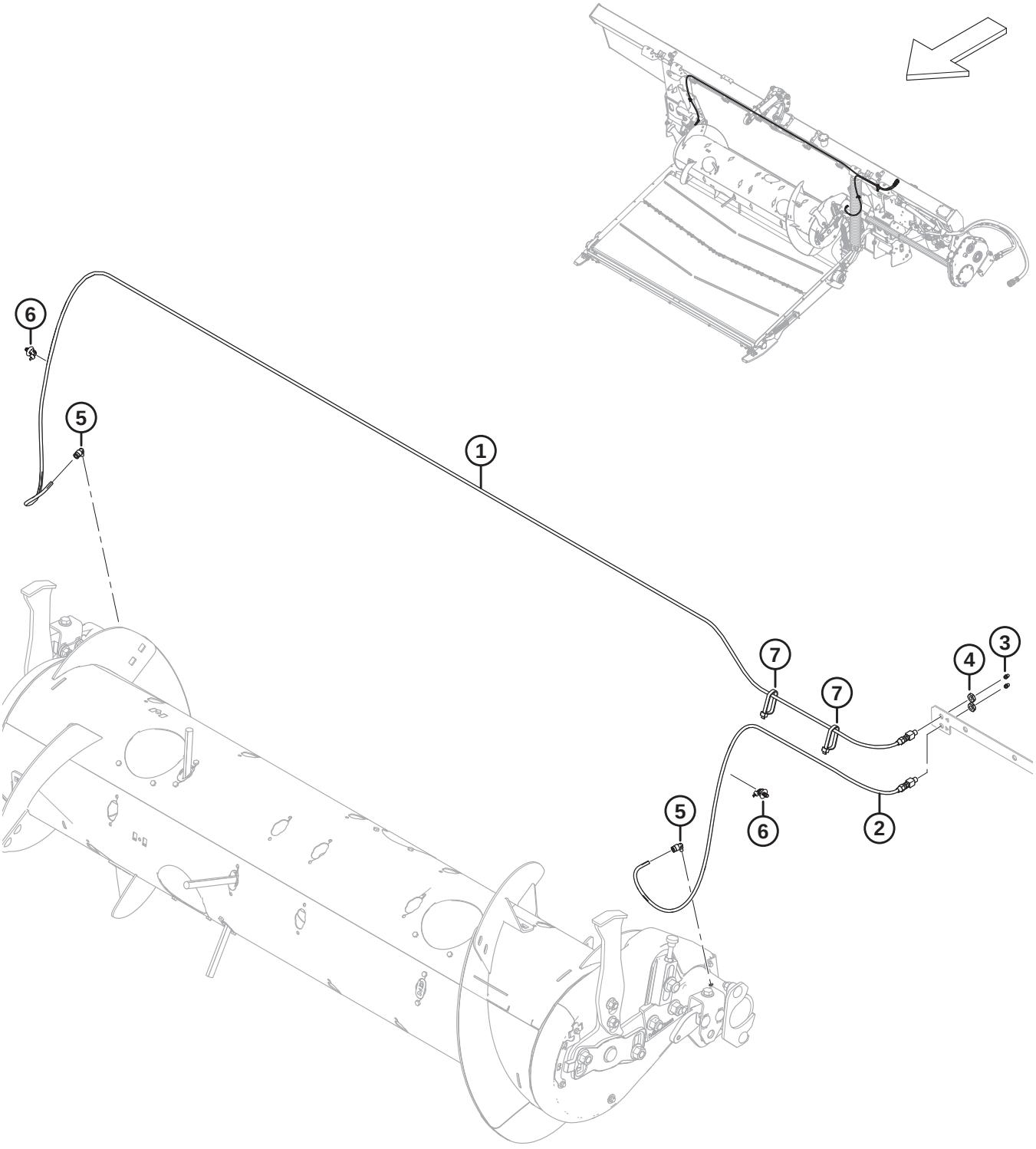

AUGER – GREASE LINES

Ref	Part Number	Description	Qty	Serial Number
1	322961	GREASE LINE – 3170 MM LG [695]	1	
2	322962	GREASE LINE – 1165 MM LG [695]	1	
3	18671	FITTING – LUBE 1/4 - 28 UNF	2	
4	320259	NUT – HEX 1/8-27 NPSM-SPCL-GR2-ZINC	2	
5	301427	FITTING – QUICK DC, 90°	2	
6	136655	FASTENER – FIR TREE MT W/ TIE	2	
7	30753	FASTENER – CABLE TIE, BLACK	2	

695. The grease line includes lube fitting (MD #18671) and hex nut (MD #320259).

167 Float Linkage and Float Setting and Measuring

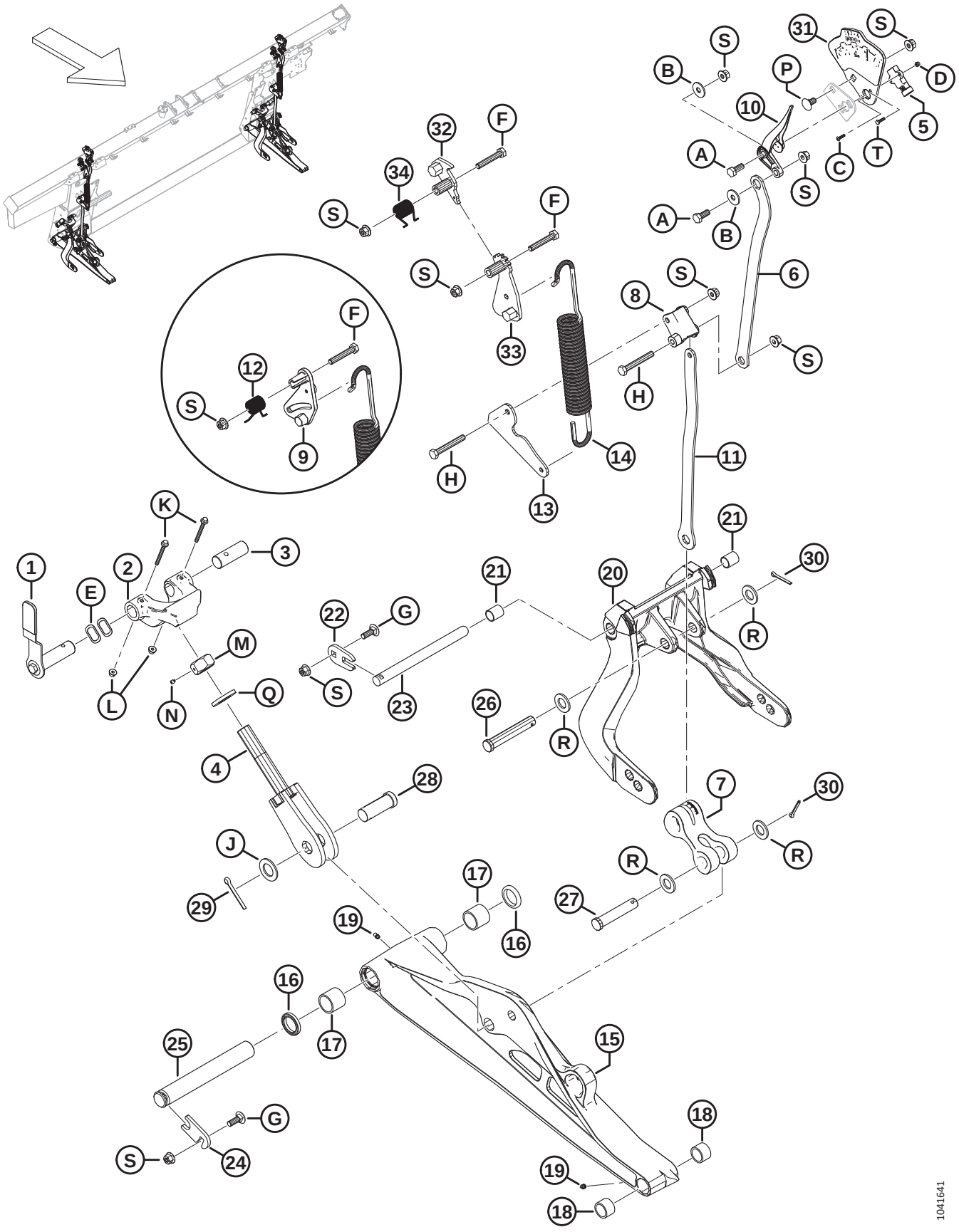

Ref	Part Number	Description	Qty	Serial Number
1	328538	HANDLE ASSY – FLOAT LOCK [696]	2	
	328491	GRIP – HANDLE	2	
2	301513	DOWNSTOP CASTING, MACHINED	2	
3	314276	PIN – PIVOT	2	
4	322219	BOLT – WELDMENT	2	
5	500303	SENSOR – ROTARY, DUAL CONTACTLESS [697]	2	
6	337634	PLATE – TOP LINK	2	
7	328133	LINK – ARM	2	
8	337821	LEVER – FSM MACHINED	2	
9	322981	CASTING – FSM LEVER (2023 AND PRIOR) [698]	A/R	
10	347923	INDICATOR NEEDLE	2	
11	337635	PLATE – BOTTOM LINK	2	
12	322046	SPRING – TORSION (2023 AND PRIOR) [699]	A/R	
13	337636	PLATE – SPRING LINK	2	
14	322557	SPRING – EXTENSION	2	
15	357299	ASSY – LOWER LINK [700]	2	
16	113222	SEAL KIT [701]		
17	100500	BEARING – NEEDLE	4	
18	49904	BEARING – NEEDLE	4	
19	320500	FITTING – LUBE 1/4-28 UNF TAPER	4	
20	357492	ASSEMBLY – FLOAT LEVER [702]	2	
21	156501	BUSHING – PLASTIC	4	
22	301633	PLATE	2	
23	335144	PIN – PIVOT	2	
24	212250	PLATE – PIN LOCK	2	
25	248261	PIN	2	
26	156741	PIN – CLEVIS	2	
27	20312	PIN – CLEVIS	2	
28	135995	PIN – CLEVIS	2	
29	18609	PIN – COTTER 1/4 DIA X 2 ZP	2	

696. The handle assembly includes float lock handle (NSS), handle grip (MD #328491), float lock pin (NSS), and hardware (MD #30627, MD #184712).
697. Rotary sensor MD #328412 has been superseded by rotary sensor MD #500303. Order rotary sensor MD #328412 until stock is depleted, then order rotary sensor MD #500303.
698. FSM lever (MD #322981) is a service part only for model year 2023 and prior machines.
699. Torsion spring (MD #322046) is a service part only for model year 2023 and prior machines.
700. The lower link assembly includes seal kit (MD #113222), two needle bearings (MD #100500), two needle bearings (MD #49904), and two lube fittings (MD #320500).
701. The seal kit includes one seal (NSS) and instructions.
702. The float lever assembly includes two plastic bushings (MD #156501).

FLOAT LINKAGE AND FLOAT SETTING AND MEASURING

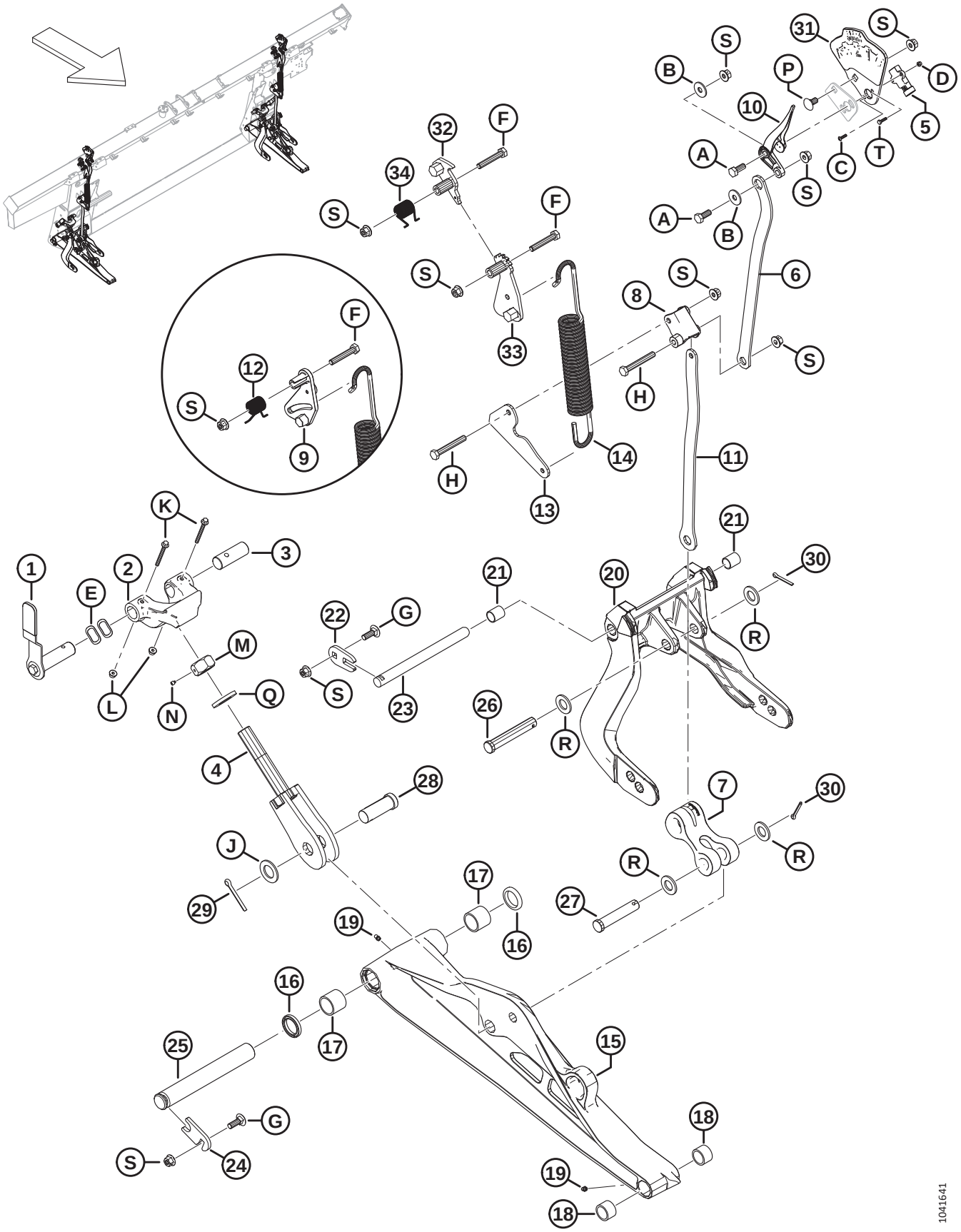

Ref	Part Number	Description	Qty	Serial Number
30	18608	PIN – COTTER 3/16 DIA X 1.5 ZP	4	
31	357455	PLATE – INDICATOR W/ DECAL [703]	2	
32	360971	PAWL – FSM WELDMENT [704]	2	
33	360756	LEVER – FSM WELDMENT [704]	2	
34	368017	SPRING – TORSION [704]	2	
A	30627	BOLT – HEX HD TFL M10 X 1.5 X 25-8.8-A3L		
B	184712	WASHER – FLAT LARGE M10-200HV		
C	320389	SCREW – HEX SOC BTN HD M4 X 0.7 X 16-A2-SS		
D	320390	NUT – HEX NYLOC M4 X 0.7-8-A2-SS		
E	252564	WASHER – WAVE		
F	184664	BOLT – HEX HD M10 X 1.5 X 60-8.8-AA1J		
G	184662	BOLT – RHSN TFL M10 X 1.5 X 30-8.8-AA1J		
H	184659	BOLT – HEX HD M10 X 1.5 X 75-8.8-AA1J		
J	156743	WASHER – FLAT		
K	136704	BOLT – HEX FLG HD M6 X 1 X 60-8.8-AA2L		
L	152668	NUT – HEX FLG CTR LOC M6 X 1-8		
M	133047	NUT – DOWNSTOP MACHINING		
N	136596	SCREW – SET CUP POINT 1/4-20 X 1/4		
P	136178	BOLT – RHSN M10 X 1.5 X 20-8.8-AA1J		
Q	31774	WASHER – FLAT 1-1/8-30 HRC-AC0C		
R	18601	WASHER – FLAT SAE		
S	135799	NUT – HEX FLG CTR LOC M10 X 1.5-10		
T	197319	BOLT – HEX HD TFL M4 X 0.7 X 16-8.8-AA1J		

703. The indicator plate assembly includes indicator plate (NSS), and float setting and measuring decal (MD #328142).
704. For model year 2024 and later machines.

168 Float Lock Pivot Rework Kit

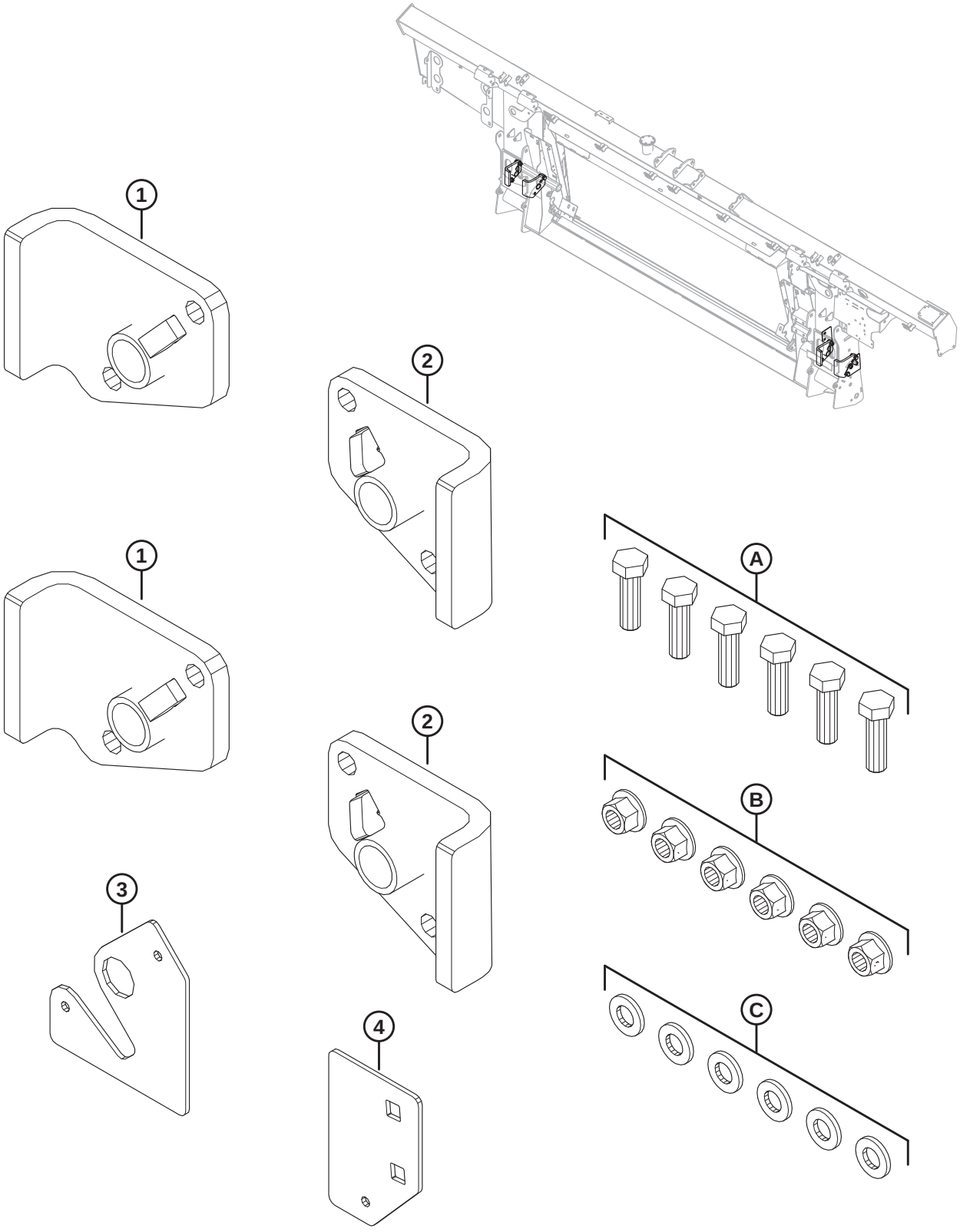

FLOAT LOCK PIVOT REWORK KIT

Ref	Part Number	Description	Qty	Serial Number
	352697	KIT – FLOAT LOCK PIVOT REWORK [705]	1	
1	NSS	ASSY – RH PIVOT REWORK	2	
2	NSS	ASSY – LH PIVOT REWORK	2	
3	NSS	PLATE – OUTER HOLES TEMPLATE	1	
4	NSS	PLATE – INNER HOLES TEMPLATE	1	
A	184669	BOLT – HEX HD M12 X 1.75 X 40-8.8-AA1J		
B	136431	NUT – HEX FLG CTR LOC M12 X 1.75-10		
C	30636	WASHER – FLAT NARROW M12-STL-SOFT-AA1J		

705. The kit includes all listed parts and instructions.

169 Float Springs

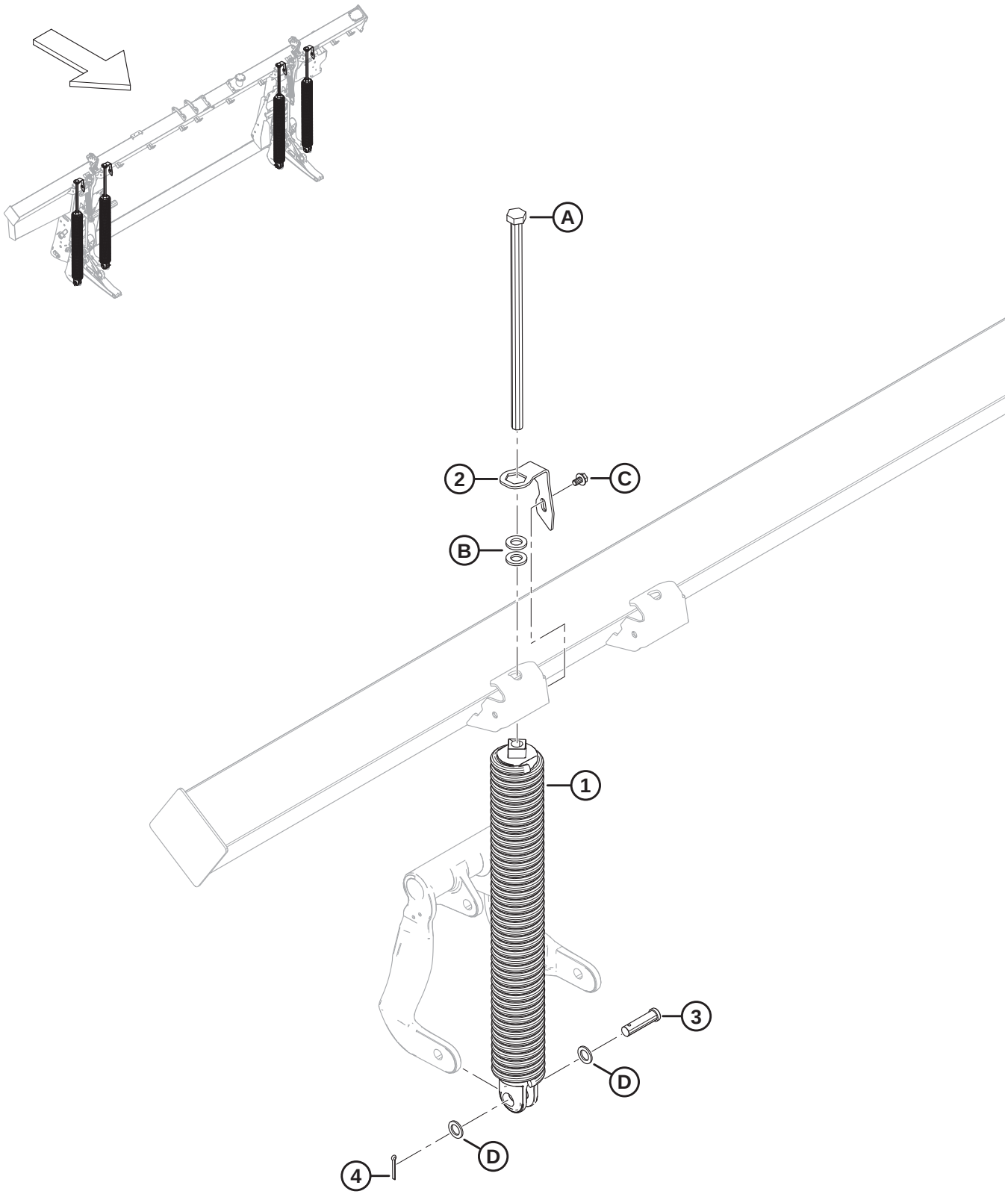

FLOAT SPRINGS

Ref	Part Number	Description	Qty	Serial Number
1	308878	SPRING – ASSEMBLY [706]		
	308879	SPRING – ASSEMBLY HEAVY [706]		
2	322668	LOCK – SPRING	4	
3	30463	PIN – CLEVIS	4	
4	18608	PIN – COTTER 3/16 DIA X 1.5 ZP	4	
A	136088	BOLT – HEX HD TFL M20 X 2.5 X 450 X SPCL-8.8-AA1J		
B	21540	WASHER – HARD ASTM F436 M20-340HV-AB2C		
C	136151	BOLT – HEX FLG HD TFL M10 X 1.5 X 16-8.8-AA1J		
D	1709	WASHER – FLAT		

706. There are four springs on each float module, but the combination of springs (MD #308878 and MD #308879) varies depending on header size. FD225 and FD230 single-knife headers require 4 x 308878; FD235 single-knife headers require 3 x 308878 and 1 x 308879 on the LH outboard side; FD235 double-knife headers require 3 x 308878 and 1 x 308879 on the RH outboard side; FD240 single-knife double reel headers require 3 x 308878 and 1 x 308879 on the LH outboard side; FD240 double-knife double reel, FD240 single-knife triple reel, FD240 double-knife triple reel, all FD241, and FD245 double-knife headers require 2 x 308878 on the inboard sides and 2 x 308879 on the outboard sides; FD250 double-knife headers require 3 x 308879 and 1 x 308878 on the LH inboard side.

170 Float Module Attaching and Filler Components – FM200 to FD2 Series (2021 and Prior)

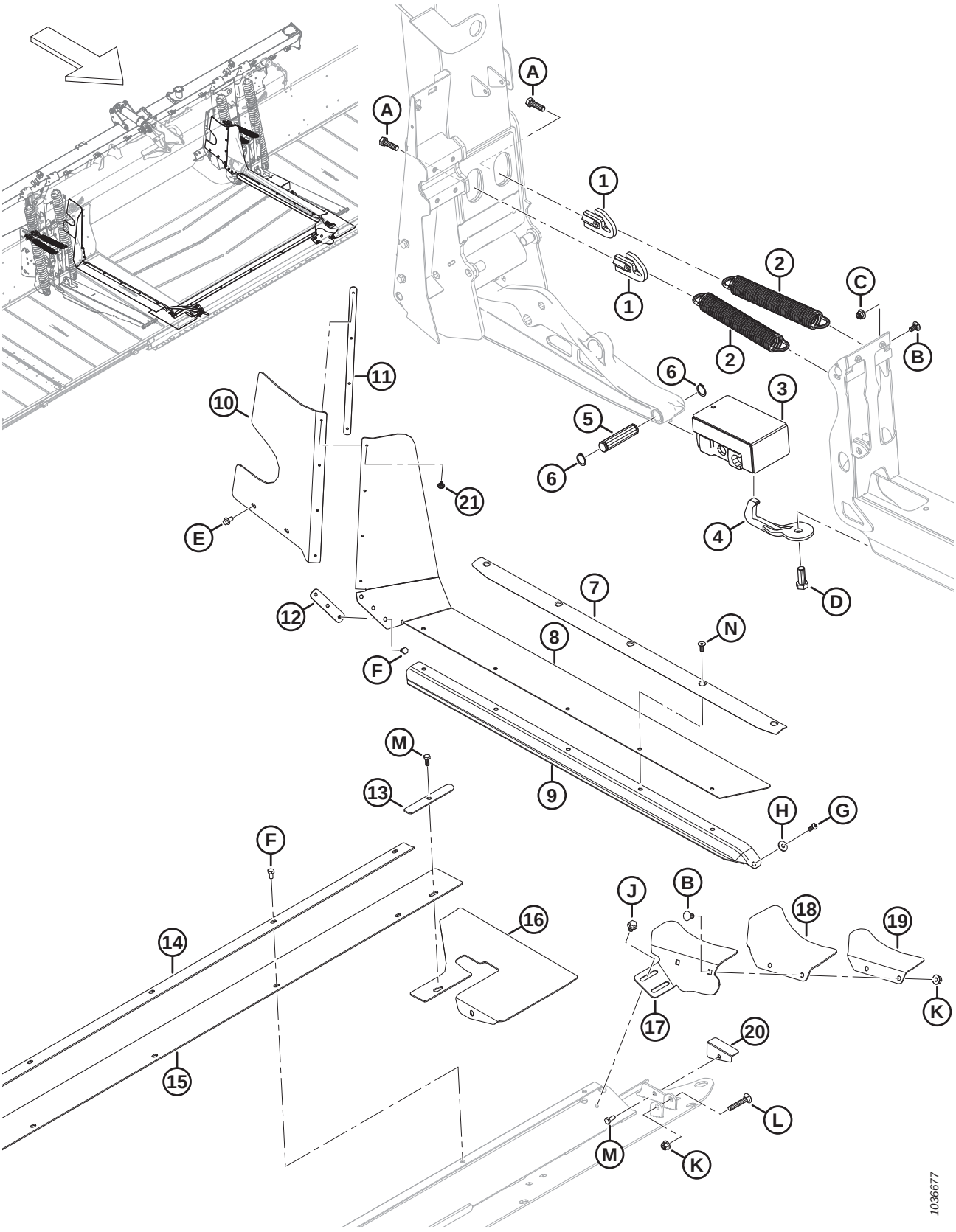

Ref	Part Number	Description	Qty	Serial Number
1	322676	TRIM SPRING TENSIONER – WELDT	4	–421189
2	340125	SPRING EXTENSION – HEADER TRIM	4	–421189
3	258703	RUBBER BLOCK FLEX – ASSY	2	–421189
4	258876	BREAKAWAY HOOK – WELDT	2	–421189
5	258318	PIN – PIVOT	2	–421189
6	18898	RING – EXT RETAINING	4	–421189
7	337407	RETAINER – SEAL AND FILLER	2	–421189
8	REF	FILLER – MID DECK SIDE FLEX [707]	2	–421189
	347963	KIT – MID FILLER UPPER [708]		–421189
9	REF	SEAL – DRAPER FEED DECK [709]	OPT	–421189
10	328348	FILLER – LH REAR UPPER	1	–421189
	328349	FILLER – RH REAR UPPER	1	–421189
11	276770	PLATE – FILLER RETAINER	2	–421189
12	213713	RETAINER – FILLER MACHINED	2	–421189
13	301127	PLATE – FILLER RETAINER	2	–421189
14	301126	RETAINER – CENTER FILLER	1	–421189
15	295261	FILLER – PAN CENTER	1	–421189
16	295992	FLAP – PAN CORNER FLEX	2	–421189
17	337457	SUPPORT – LH CORNER FILLER	1	–421189
	337463	SUPPORT – RH CORNER FILLER	1	–421189
18	304040	FLAP – CORNER FILLER	2	–421189
19	337456	RETAINER – LH CORNER FILLER	1	–421189
	337464	RETAINER – RH CORNER FILLER	1	–421189
20	276117	RETAINER – PAN FLAP LH	1	–421189
	276062	RETAINER – PAN FLAP RH	1	–421189
21	293053	RIVET – POP	8	–421189
A	184669	BOLT – HEX HD M12 X 1.75 X 40-8.8-AA1J		
B	184657	BOLT – RHSSN M10 X 1.5 X 20-8.8-AA1J		
C	252807	NUT – HEX FLANGE NYLOC M10 X 1.5-8-AA1J		
D	111528	BOLT – HEX HD TFL M16 X 2 X 40-8.8-AA1J		
E	136485	BOLT – HEX FLG HD TFL M8 X 1.25 X 16-8.8-AA1J		
F	50139	BOLT – HEX HD TFL M8 X 1.25 X 16-8.8-AA1J		

707. The single-piece mid filler has been superseded by a thicker two-piece filler. If replacing a single-piece mid filler, order mid filler kit (MD #347963). The kit includes all parts required for both the left and right sides of the float module: two mid fillers (MD #347500), two upper mid fillers (MD #347775), two retainer plates (MD #347778), and rivets (MD #293053).
708. Includes all parts required for both the left and right sides of the float module: two mid fillers (MD #347500), two upper mid fillers (MD #347775), two retainer plates (MD #347778), and rivets (MD #293053).
709. For service parts, refer to Section *198 (Option) FM200 Full Interface Filler – FD2 Series, page 541*.

FLOAT MODULE ATTACHING AND FILLER COMPONENTS – FM200 TO FD2 SERIES (2021 AND PRIOR)

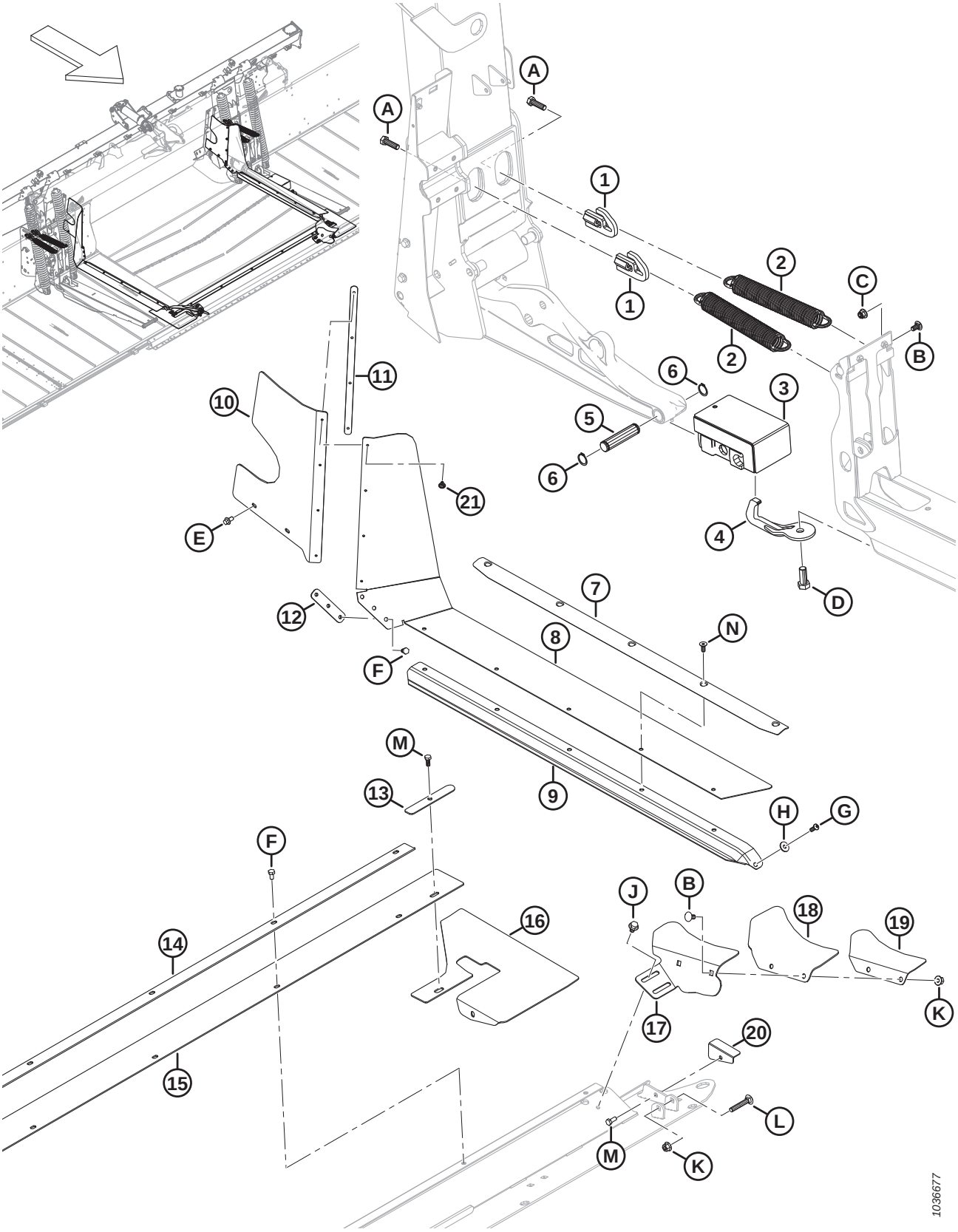

FLOAT MODULE ATTACHING AND FILLER COMPONENTS – FM200 TO FD2 SERIES (2021 AND PRIOR)

Ref	Part Number	Description	Qty	Serial Number
G	320176	SCREW – HEX SOC BTN HD M8 X 1.25 X 20-10.9-AA1J		
H	184709	WASHER – FLAT LARGE M8-200HV		
J	136231	BOLT – HEX SER FLG HD M10 X 1.5 X 16 X SPCL-8.8		
K	135799	NUT – HEX FLG CTR LOC M10 X 1.5-10		
L	136113	BOLT – RHSN M10 X 1.5 X 60-8.8-AA1J		
M	30715	BOLT – HEX HD TFL M8 X 1.25 X 20-8.8-AA1J		
N	136592	SCREW – HEX SOC CSK HD TFL M8 X 1.25 X 20-8.8-ZINC		

171 Float Module Attaching and Filler Components – FM200 to FD2 Series (2022 and Later)

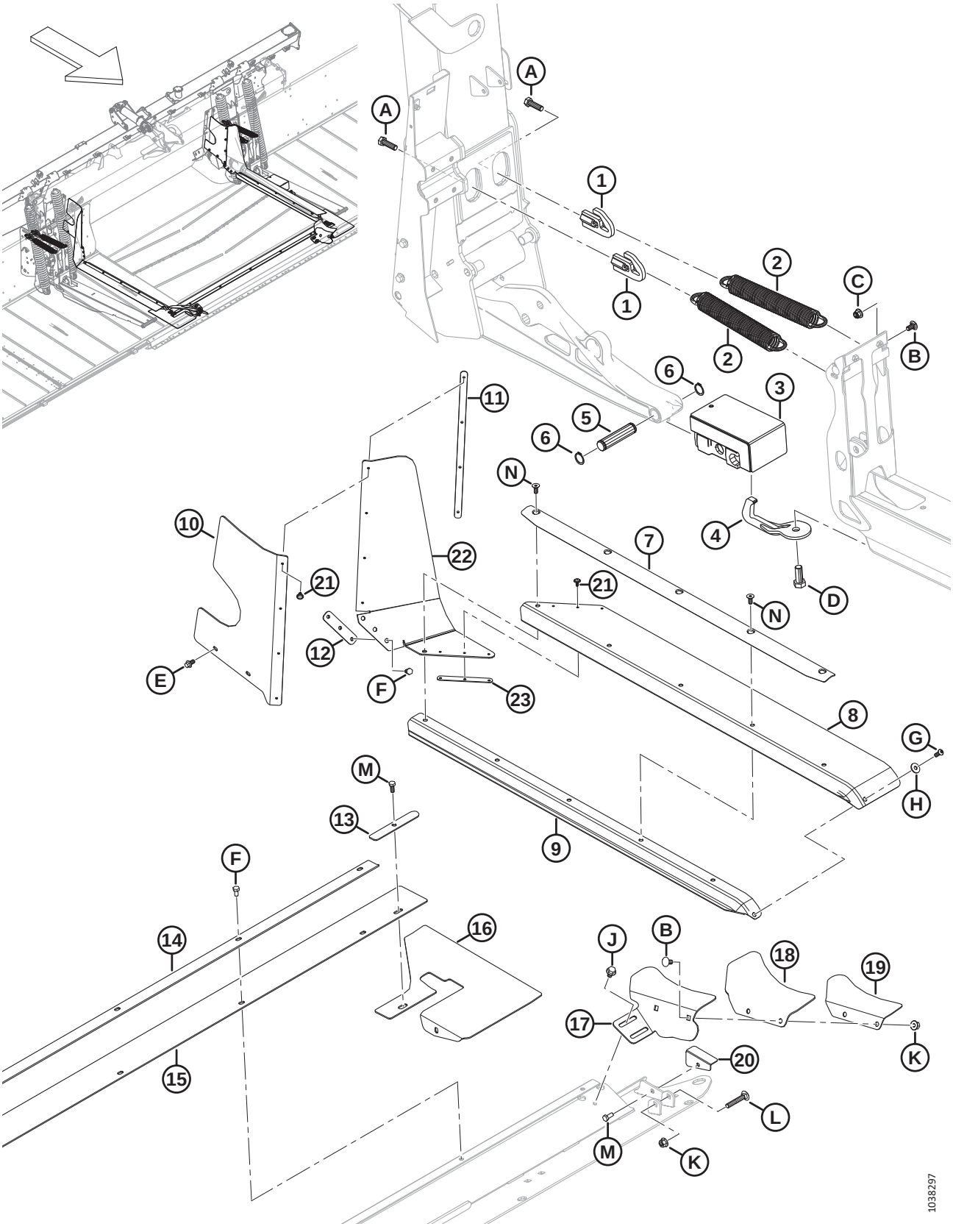

FLOAT MODULE ATTACHING AND FILLER COMPONENTS – FM200 TO FD2 SERIES (2022 AND LATER)

Ref	Part Number	Description	Qty	Serial Number
1	322676	TRIM SPRING TENSIONER – WELDT	4	421190–
2	340125	SPRING EXTENSION – HEADER TRIM	4	421190–
3	258703	RUBBER BLOCK FLEX – ASSY	2	421190–
4	258876	BREAKAWAY HOOK – WELDT	2	421190–
5	258318	PIN – PIVOT	2	421190–
6	18898	RING – EXT RETAINING	4	421190–
7	337407	RETAINER – SEAL AND FILLER	2	421190–
8	347500	FILLER – MID DECK SIDE	2	421190–
9	REF	SEAL – DRAPER FEED DECK [710]	OPT	421190–
10	328348	FILLER – LH REAR UPPER	1	421190–
	328349	FILLER – RH REAR UPPER	1	421190–
11	276770	PLATE – FILLER RETAINER	2	421190–
12	213713	RETAINER – FILLER MACHINED	2	421190–
13	301127	PLATE – FILLER RETAINER	2	421190–
14	301126	RETAINER – CENTER FILLER	1	421190–
15	295261	FILLER – PAN CENTER	1	421190–
16	295992	FLAP – PAN CORNER FLEX	2	421190–
17	337457	SUPPORT – LH CORNER FILLER	1	421190–
	337463	SUPPORT – RH CORNER FILLER	1	421190–
18	304040	FLAP – CORNER FILLER	2	421190–
19	337456	RETAINER – LH CORNER FILLER	1	421190–
	337464	RETAINER – RH CORNER FILLER	1	421190–
20	276117	RETAINER – PAN FLAP LH	1	421190–
	276062	RETAINER – PAN FLAP RH	1	421190–
21	293053	RIVET – POP	14	421190–
22	347775	FILLER – MID DECK SIDE UPPER	2	421190–
23	347778	PLATE – FILLER RETAINER	2	421190–
A	184669	BOLT – HEX HD M12 X 1.75 X 40-8.8-AA1J		
B	184657	BOLT – RHSSN M10 X 1.5 X 20-8.8-AA1J		
C	252807	NUT – HEX FLANGE NYLOC M10 X 1.5-8-AA1J		
D	111528	BOLT – HEX HD TFL M16 X 2 X 40-8.8-AA1J		
E	136485	BOLT – HEX FLG HD TFL M8 X 1.25 X 16-8.8-AA1J		
F	50139	BOLT – HEX HD TFL M8 X 1.25 X 16-8.8-AA1J		
G	320176	SCREW – HEX SOC BTN HD M8 X 1.25 X 20-10.9-AA1J		
H	184709	WASHER – FLAT LARGE M8-200HV		
J	136231	BOLT – HEX SER FLG HD M10 X 1.5 X 16 X SPCL-8.8		

710. For service parts, refer to Section *198 (Option) FM200 Full Interface Filler – FD2 Series, page 541*.

FLOAT MODULE ATTACHING AND FILLER COMPONENTS – FM200 TO FD2 SERIES (2022 AND LATER)

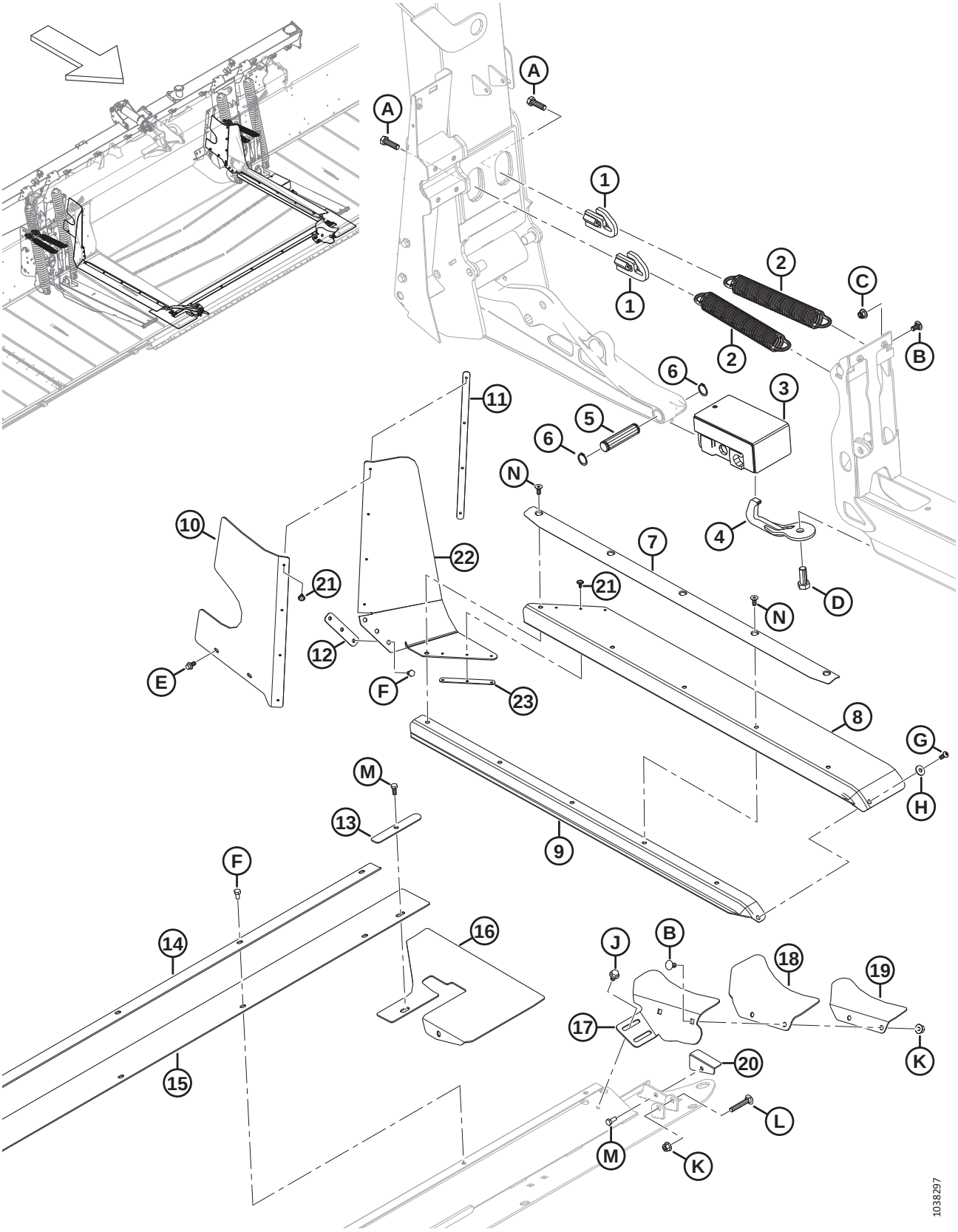

FLOAT MODULE ATTACHING AND FILLER COMPONENTS – FM200 TO FD2 SERIES (2022 AND LATER)

Ref	Part Number	Description	Qty	Serial Number
K	135799	NUT – HEX FLG CTR LOC M10 X 1.5-10		
L	136113	BOLT – RHSN M10 X 1.5 X 60-8.8-AA1J		
M	30715	BOLT – HEX HD TFL M8 X 1.25 X 20-8.8-AA1J		
N	136592	SCREW – HEX SOC CSK HD TFL M8 X 1.25 X 20-8.8-ZINC		

172 Feed Deck – Frame, Pivot Pins, and Front Support

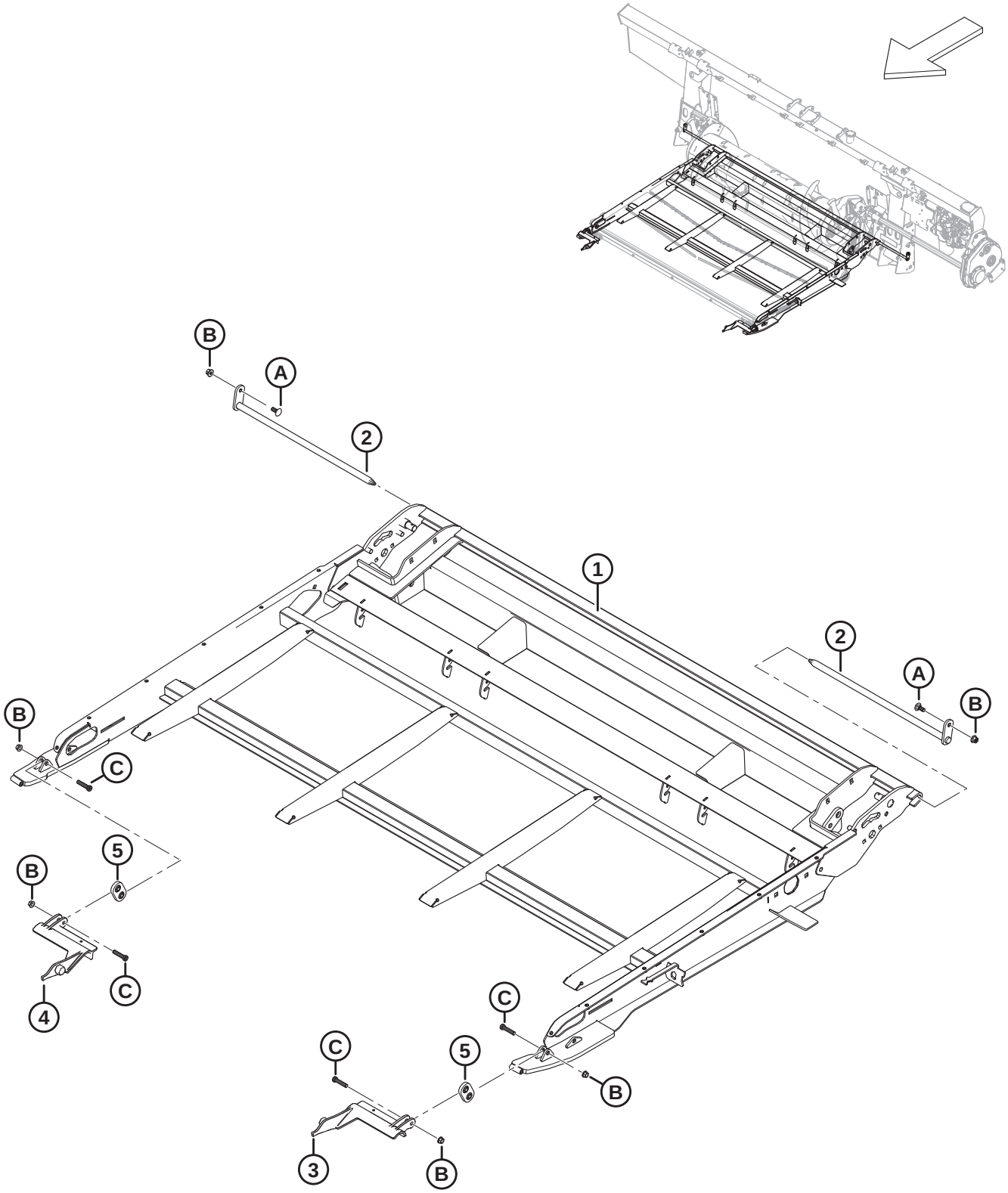

1036581

FEED DECK – FRAME, PIVOT PINS, AND FRONT SUPPORT

Ref	Part Number	Description	Qty	Serial Number
	368380	ASSY – FEED DECK [711]	1	
1	347665	FRAME – CARRIER, FEED DECK WELDT	1	
2	231368	PIN – DECK PIVOT WELDT	2	
3	213418	SUPPORT – LH ADAPTER LINK MACH	1	
4	213419	SUPPORT – RH ADAPTER LINK MACH	1	
5	308774	SUPPORT – HOOK ASSY	2	
A	135785	BOLT – RHSN M10 X 1.5 X 25-8.8-AA1J		
B	135799	NUT – HEX FLG CTR LOC M10 X 1.5-10		
C	320358	SCREW – HEX SOC HD M10 X 1.5 X 45-SPCL-8.8-ZINC		

711. Complete feed deck assembly. The assembly does not include pivot pins (MD #231368) and associated hardware, but includes all other parts listed in Section *172 Feed Deck – Frame, Pivot Pins, and Front Support, page 471* to Section *175 Feed Deck – Pans and Fillers, page 479*.

173 Feed Deck – Draper

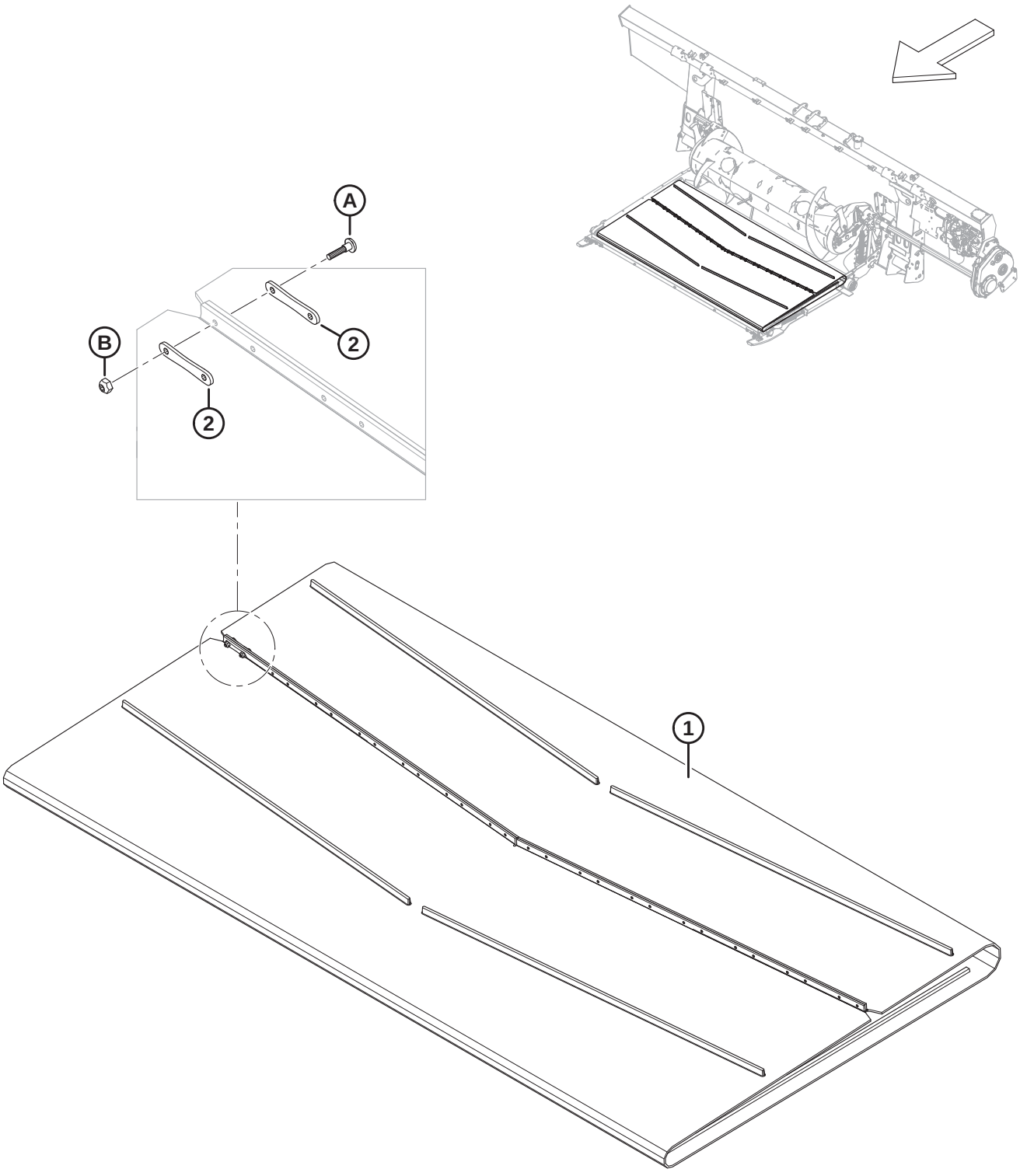

1032730

Ref	Part Number	Description	Qty	Serial Number
1	322555	DRAPER – 1988 MM (78.3 IN.) WIDE X 2205 MM LG	1	
2	130283	STRAP – DRAPER CONNECTOR	28	
A	135630	SCREW – BHRN #12-24 NCX 0.920 IN. LG (QTY 50)		
B	135626	NUT – #12-24 NC (QTY 50)		

174 Feed Deck – Drive/Idler Roller and Tensioner

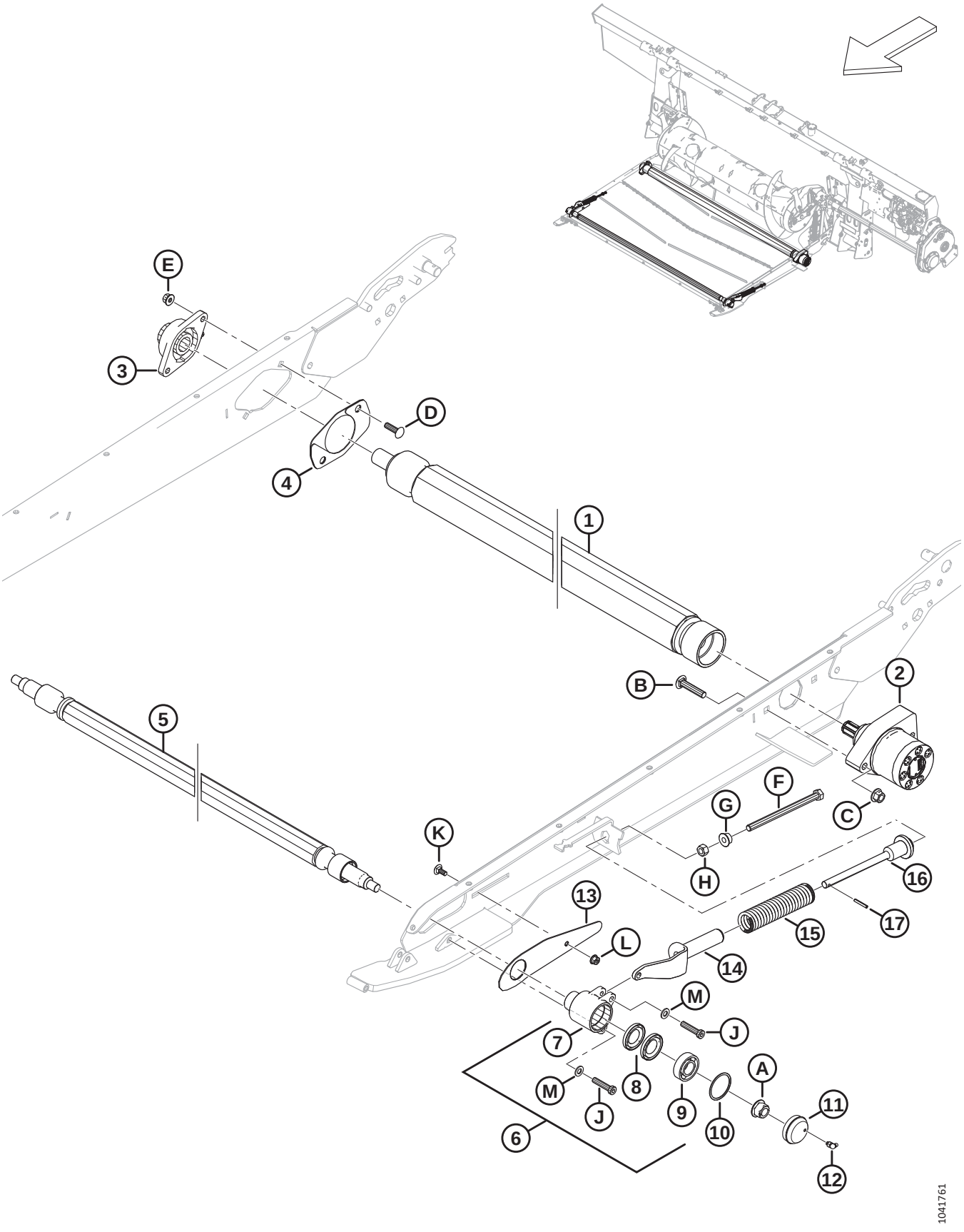

FEED DECK – DRIVE/IDLER ROLLER AND TENSIONER

Ref	Part Number	Description	Qty	Serial Number
1	347483	ROLLER – DRIVE, VULCANIZED	1	
2	295853	MOTOR – HYD	1	
	245316	SEAL KIT		
3	347487	HOUSING – FL206 AND BEARING	1	
4	347553	KIT – DRIVE ROLLER COVER [712]	1	
5	295770	ROLLER – IDLER	1	
6	368460	KIT – IDLER CUP W/ INSTRUCTION (2024 AND LATER) [713]	2	
	335981	KIT – IDLER HOUSING AND GREASE CAP (2023 AND PRIOR) [714]	A/R	
7	335981	KIT – IDLER HOUSING AND GREASE CAP [715]	2	
8	100862	SEAL – OIL	4	
9	368457	KIT – BEARING W/ INSTRUCTION [716]	2	
10	118011	RING – RETAINING INTERNAL	2	
11	357230	ASSY – DUST CAP WITH FITTING (2024 AND LATER) [717]	2	
	133372	CAP – DUST (2023 AND PRIOR) [718]	A/R	
12	21010	FITTING – LUBE 90° 1/4-28 TAPER THD [719]	2	
13	295766	COVER – IDLER ROLLER	2	
14	328128	SUPPORT – DECK TENSION CASTING	2	
15	295407	SPRING – COMPRESSION	2	
16	328143	SUPPORT – SPRING MACHINED	2	
17	13617	PIN – SPRING 3/16 DIA X 1.25 LG	2	
A	152520	NUT – HEX FLG TECH LK M16 X 2-10-AA1J		
B	136308	BOLT – RHSSN M12 X 1.75 X 60-8.8-ZINC		

712. The kit includes two cover plates (not sold separately).
713. The Idler Housing kit (MD #368460) is used to service the idler housing assembly (item #6) for model year 2024 and later machines. The Idler Housing kit includes one idler housing (NSS), two oil seals (MD #100862), one bearing (MD #118185), one internal retaining ring (MD #118011), and instructions. The kit does NOT include the lube fitting (MD #21010), dust cap (NSS), or attaching bolts (MD #135319).
714. The Idler Housing and Grease Cap kit (MD #335981) is used to service the idler housing assembly (item #6) for model year 2023 and prior machines. The kit includes one dust cap assembly with fitting (MD #357230), one Idler Housing kit (MD #368460), and instructions.
715. The Idler Housing and Grease Cap kit (MD #335981) is also used to service superseded idler housing MD #314474 (item #7). The kit includes one dust cap assembly with fitting (MD #357230), one Idler Housing kit (MD #368460), and instructions.
716. The kit includes one 52 mm O.D. ball bearing (NSS) and instructions.
717. The Dust Cap with Fitting assembly (MD #357230) is used to service model year 2024 and later machines, or machines that have been serviced with the Idler Housing and Grease Cap kit (MD #335981). The assembly includes one dust cap (NSS) and one lube fitting (MD #21010).
718. Dust cap (MD #133372) is used to service model year 2023 and prior machines that have NOT been serviced with the Idler Housing and Grease Cap kit (MD #335981).
719. The lube fitting connects to the idler housing for model year 2023 and prior machines that have NOT been serviced with the Idler Housing and Grease Cap kit (MD #335981).

FEED DECK – DRIVE/IDLER ROLLER AND TENSIONER

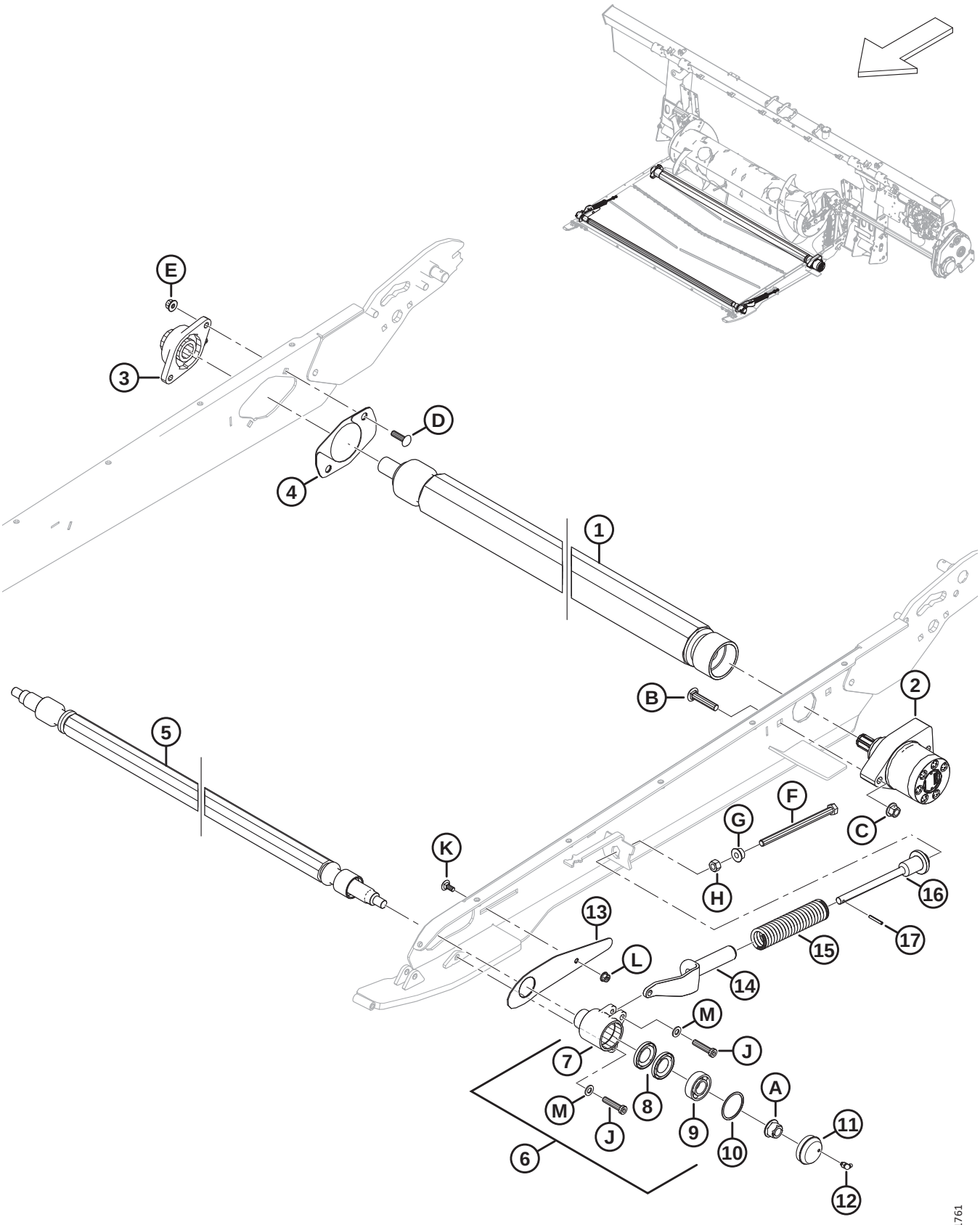

FEED DECK – DRIVE/IDLER ROLLER AND TENSIONER

Ref	Part Number	Description	Qty	Serial Number
C	136431	NUT – HEX FLG CTR LOC M12 X 1.75-10		
D	136248	BOLT – RHSSN TFL M10 X 1.5 X 35-8.8-AA1J		
E	135799	NUT – HEX FLG CTR LOC M10 X 1.5-10		
F	252272	BOLT – HEX HD TFL M12 X 1.75 X 180-10.9-ZINC		
G	136036	NUT – HEX SM FLG M12 X 1.75-8-AA1J		
H	184694	NUT – HEX M12 X 1.75-8-AA1J		
J	320358	SCREW – HEX SOC HD M10 X 1.5 X 45-SPCL-8.8-ZINC		
K	197171	BOLT – RHSN M8 X 1.25 X 20-8.8-ZINC		
L	135337	NUT – HEX FLG CTR LK M8 X 1.25-8-AA1J		
M	184711	WASHER – FLAT REG M10-200HV-AA1J		

175 Feed Deck – Pans and Fillers

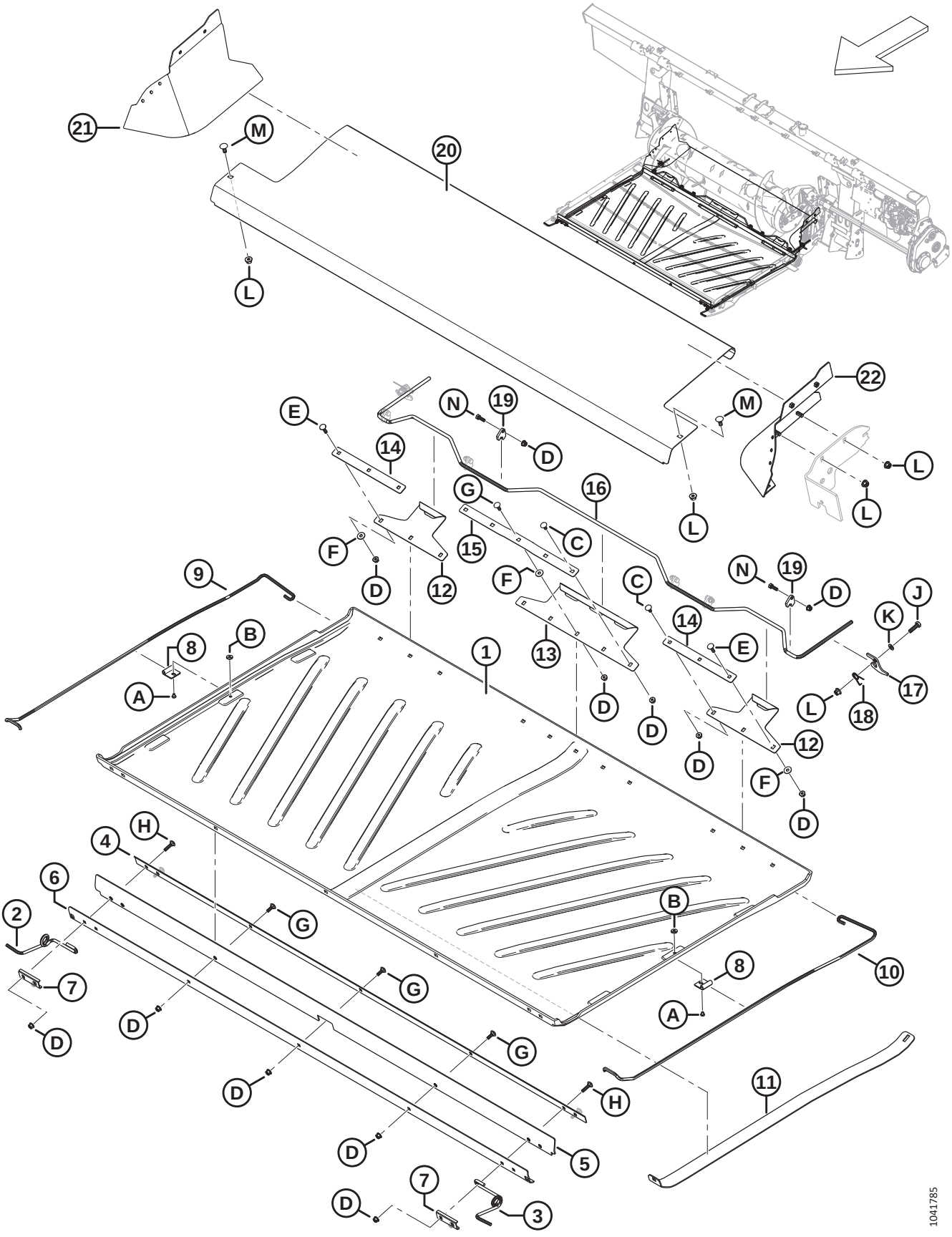

FEED DECK – PANS AND FILLERS

Ref	Part Number	Description	Qty	Serial Number
1	360927	PAN – FEED DECK [720]	1	
2	347691	SUPPORT – PAN FRONT SPRING RH	1	
3	347692	SUPPORT – PAN FRONT SPRING LH	1	
4	295213	PLATE – FRONT BAR INNER	1	
5	295212	FLAP – PAN FRONT	1	
6	295211	PLATE – FRONT BAR OUTER	1	
7	287939	RETAINER – FRONT SPRING	2	
8	248833	RETAINER – PAN SPRING	2	
9	213634	SUPPORT – PAN SPRING RH	1	
10	213633	SUPPORT – PAN SPRING LH	1	
11	213635	SUPPORT – PAN LIFTER	1	
12	240013	HOOK – REAR SIDE	2	
13	360924	HOOK – REAR CENTER [721]	1	
14	231765	BAR – SIDE HOOK	2	
15	360925	BAR – HOOK CENTER [722]	1	
16	240010	HANDLE – PAN LATCH	1	
17	240254	SUPPORT – PAN HANDLE LATCH	2	
18	159020	SPRING – TORSION	2	
19	248914	GUIDE – HANDLE LOCK	6	
20	240264	PAN – FEED DECK STAINLESS	1	
21	335912	FILLER – RH REAR CORNER WELDT	1	
22	335891	FILLER – LH REAR CORNER WELDT	1	
A	252291	SCREW – PAN HD M6 X 1 X 8-8.8-AA1J		
B	252051	NUT – TEE M6		
C	197171	BOLT – RHSN M8 X 1.25 X 20-8.8-ZINC		
D	135337	NUT – HEX FLG CTR LK M8 X 1.25-8-AA1J		
E	190752	BOLT – RHSN M8 X 1.25 X 30-8.8-AA1J		
F	184709	WASHER – FLAT LARGE M8-200HV		
G	184648	BOLT – RHSN M8 X 1.25 X 25-8.8-AA1J		
H	136050	BOLT – RHSN M8 X 1.25 X 35-8.8-AA1J		
J	30628	BOLT – HEX HD M10 X 1.5 X 35-8.8-AA1J		
K	184711	WASHER – FLAT REG M10-200HV-AA1J		
L	135799	NUT – HEX FLG CTR LOC M10 X 1.5-10		

720. Feed deck pan MD #276681 superseded by feed deck pan MD #360927. Order pan MD #276681 until stock is depleted, then order pan MD #360927.
721. Rear center hook MD #240012 superseded by rear center hook MD #360924. Order hook MD #240012 until stock is depleted, then order hook MD #360924.
722. Center hook bar MD #231766 superseded by center hook bar MD #360925. Order bar MD #231766 until stock is depleted, then order bar MD #360925.

FEED DECK – PANS AND FILLERS

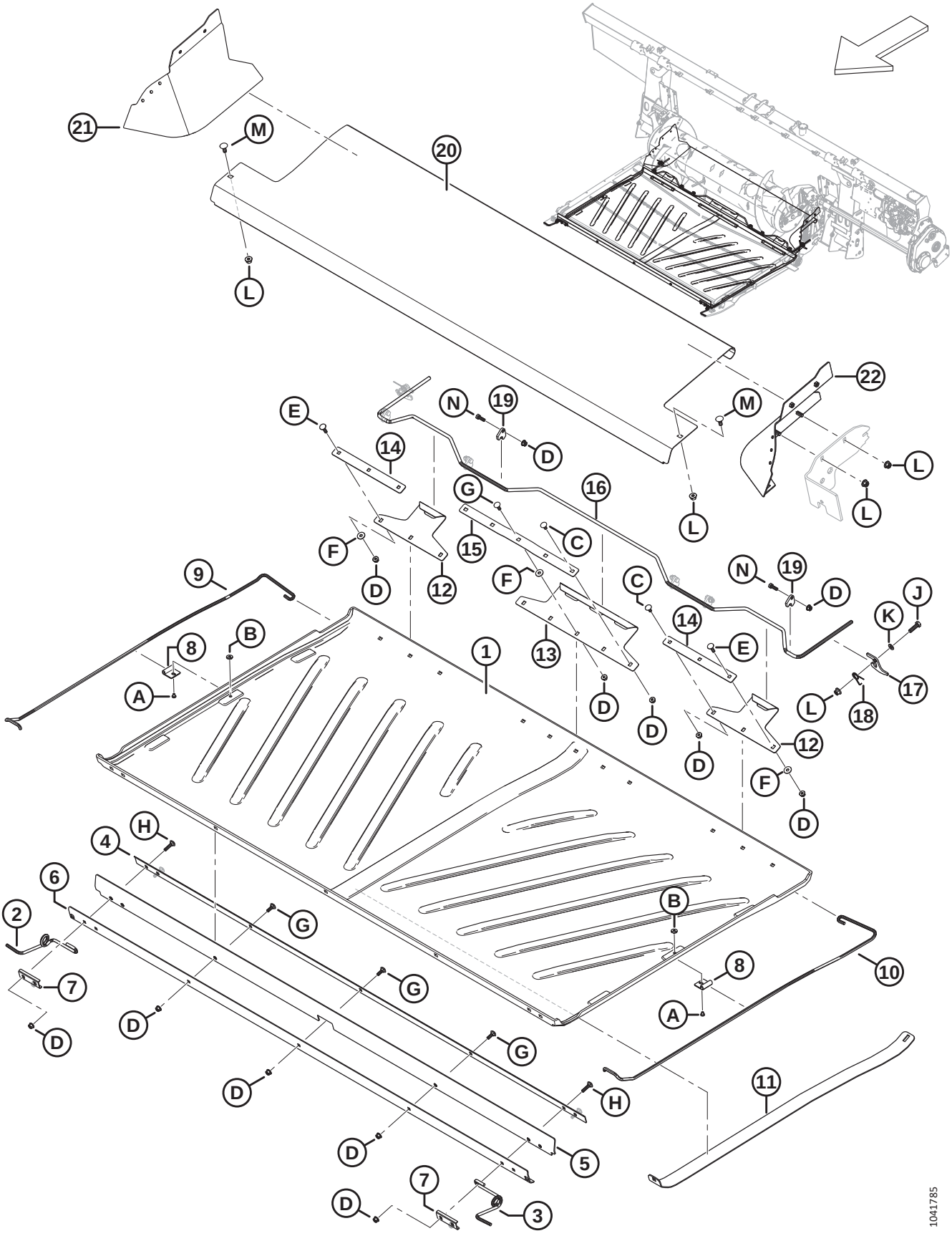

Ref	Part Number	Description	Qty	Serial Number
M	135785	BOLT – RHSN M10 X 1.5 X 25-8.8-AA1J		
N	184652	BOLT – HEX HD TFL M8 X 1.25 X 25-8.8-AA1J		

176 Hydraulics – Center-Link and Header Tilt / Reel Fore-Aft

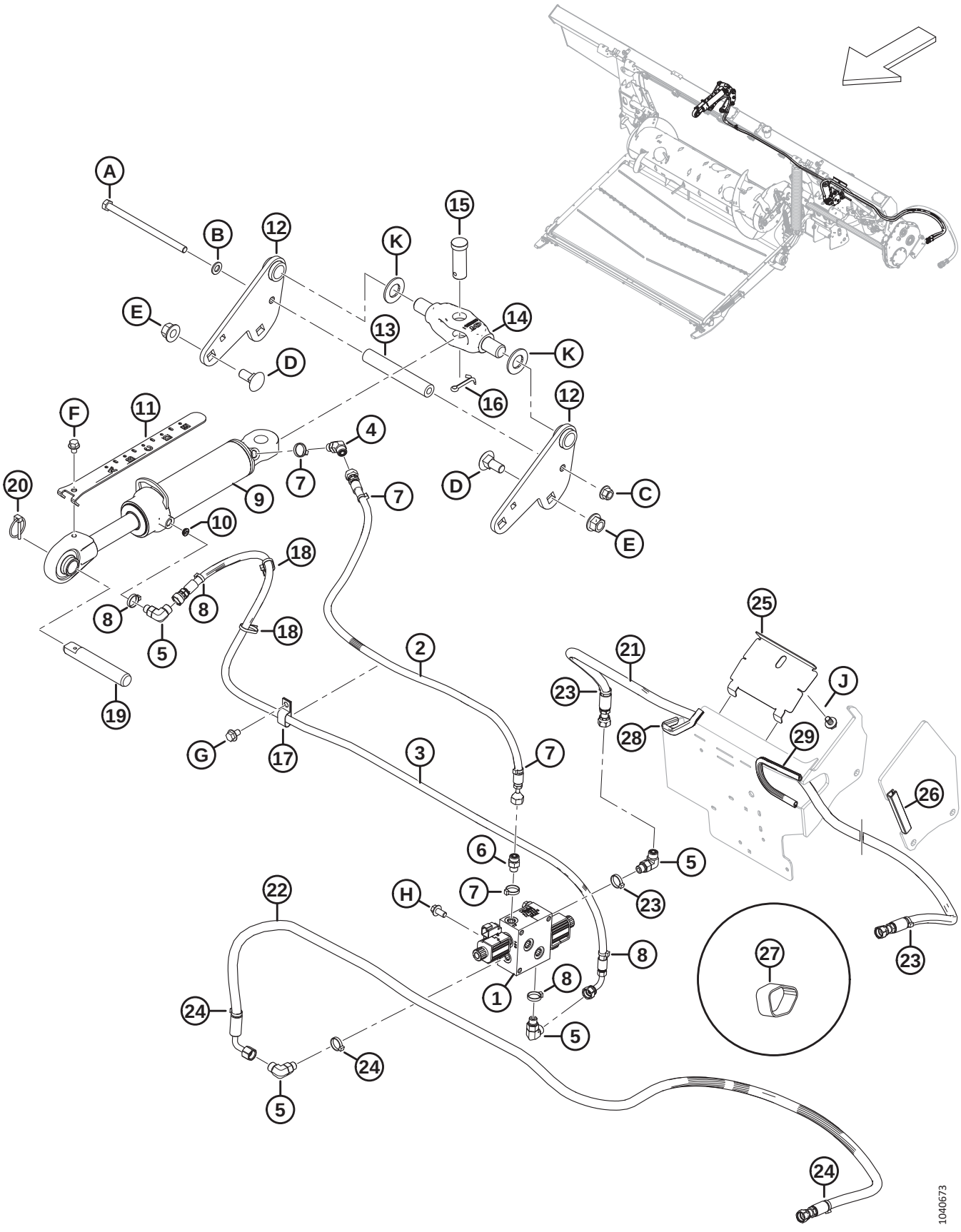

Ref	Part Number	Description	Qty	Serial Number
1	322022	MANIFOLD – SELECTOR VALVE (SV) [723]	1	
	213363	MANIFOLD – SELECTOR VALVE (SV) [724]		
	287449	COIL – 12VDC - .625IN		
	287450	VALVE – POPPET		
	287451	SEAL KIT		
2	314417	HOSE – HYD, TILT FORE	1	
3	314416	HOSE – HYD, TILT AFT	1	
4	136144	FITTING – ELBOW 45° HYD	1	
	135865	O-RING – Ø1.78 X Ø9.25		
	50219	O-RING – Ø1.98 X Ø11.89		
5	136095	FITTING – ELBOW 90° HYD	3	
	135865	O-RING – Ø1.78 X Ø9.25		
	50219	O-RING – Ø1.98 X Ø11.89		
6	135778	FITTING – ADAPTER	1	
	135865	O-RING – Ø1.78 X Ø9.25		
	50219	O-RING – Ø1.98 X Ø11.89		
7	40703	FASTENER – CABLE TIE, BLUE	4	
8	40704	FASTENER – CABLE TIE, ORANGE	4	
9	308658	CYLINDER – TOP LINK, 193 STROKE	1	
	123978	SEAL KIT		
10	252692	RESTRICTOR – #6 ORB X.035 IN.	1	
11	314292	INDICATOR – TILT, 193 STROKE	1	
12	314645	WELDMENT – TOP LINK ANCHOR	2	
13	301318	TUBE – SPACER	1	
14	187660	PIVOT – MACHINING	1	
15	135995	PIN – CLEVIS	1	
16	18609	PIN – COTTER 1/4 DIA X 2 ZP	1	
17	135234	CLAMP – DOUBLE HOSE INSULATED	1	
18	21763	FASTENER – CABLE TIE, BLACK	2	
19	313734	PIN – CENTER LINK	1	
20	102264	PIN – LYNCH 3/16 X 1 9/16 IN	1	
21	314397	HOSE – HYD, REEL FORE	1	
22	314399	HOSE – HYD, REEL AFT	1	
23	49227	FASTENER – CABLE TIE, GREEN	3	

723. The manifold includes selector valve manifold (MD #213363), one adapter fitting (MD #135778), three 90° elbow fittings (MD #136095), blue fastener (MD #40703), orange fastener (MD #40704), red fastener (MD #40702), and green fastener (MD #49227).
724. The manifold includes two poppet valves (MD #287450) and two coils (MD #287449).

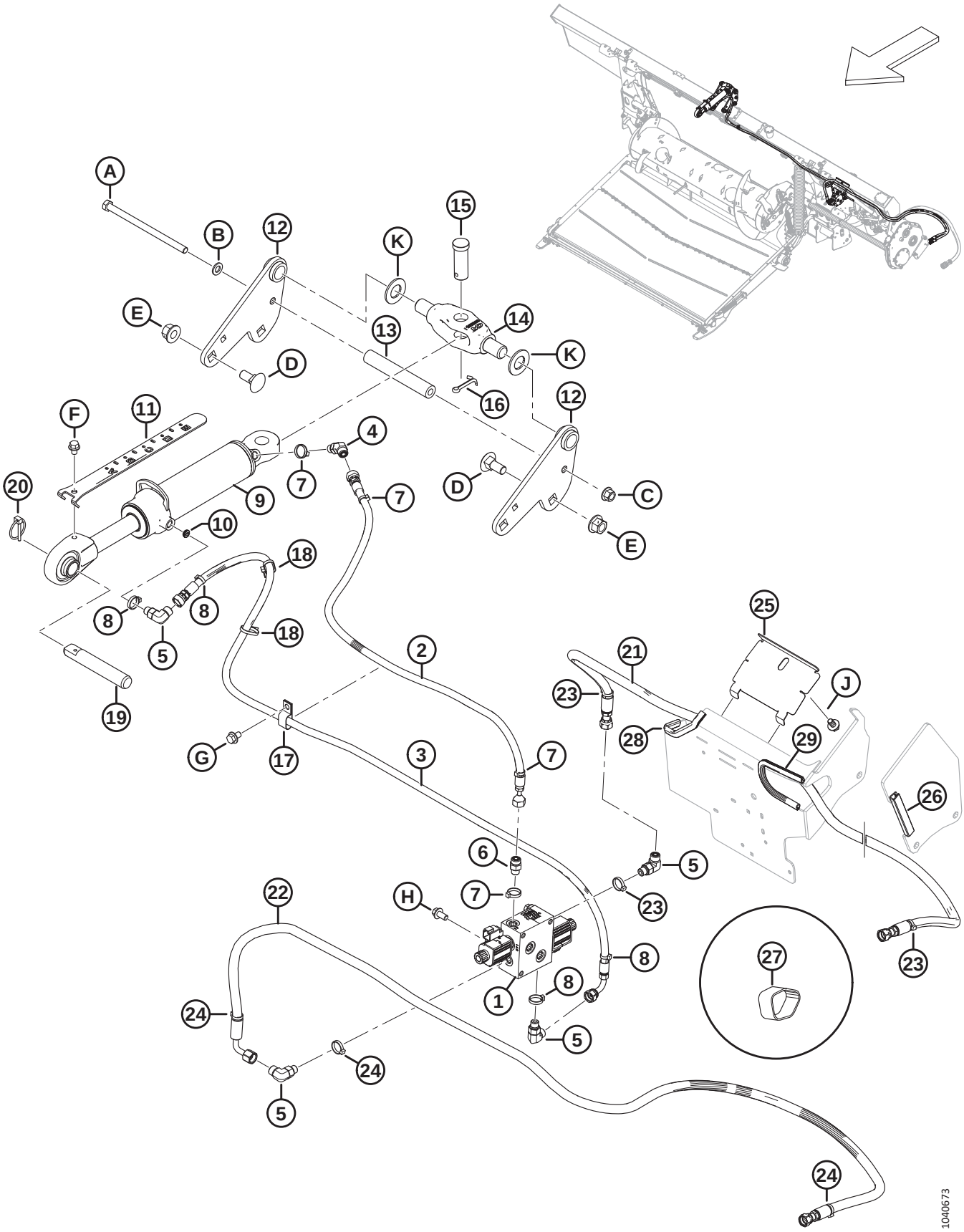
A
B
12
K
15
E
13
14
K
D
16
12
F
11
4
7
D
C
20
9
7
10
E
18
8
8
18
5
2
25
21
J
23
19
28
29
G
17
3
7
26
6
5
H
7
23
22
8
1
8
27
23
24
5
24
5
24
1040673

Ref	Part Number	Description	Qty	Serial Number
24	40702	FASTENER – CABLE TIE, RED	3	
25	347949	PANEL – HOSE HOLDER	1	
26	254183	SEAL – EDGE TRIM [725]	**A/R**	
27	295927	CINCH STRAP – 8 IN. LG [726]	1	
28	133136	MOULDING	1	
29	45427	MOULDING – RH	1	
A	152395	BOLT – HEX HD M12 X 1.75 X 200-10.9-AA3L		
B	184714	WASHER – FLAT REG M12-300HV		
C	136431	NUT – HEX FLG CTR LOC M12 X 1.75-10		
D	136755	BOLT – RHSN M16 X 2 X 40-8.8-AA1J		
E	136440	NUT – HEX FLG CTR LK M16 X 2-10-AA1J		
F	30693	BOLT – HEX FLG HD SER 3/8-16 X .5 GR 5 - AA1J		
G	136151	BOLT – HEX FLG HD TFL M10 X 1.5 X 16-8.8-AA1J		
H	152655	BOLT – HEX FLG HD M10 X 1.5 X 20-8.8-AA1J		
J	136151	BOLT – HEX FLG HD TFL M10 X 1.5 X 16-8.8-AA1J		
K	18603	WASHER – FLAT SAE 1 1/16 ID X 2.0 IN OD AA1J [727]		

725. Edge trim seal (MD #254183) is a service part only for units with older float module frames as shown in the illustration.
726. The cinch strap is used to protect reel fore-aft hoses (MD #314397, MD #314399).
727. Also used at the header end of the center-link on some model year 2022 and prior headers.

177 Hydraulics – Feed Deck (Integrated Hydraulic System)

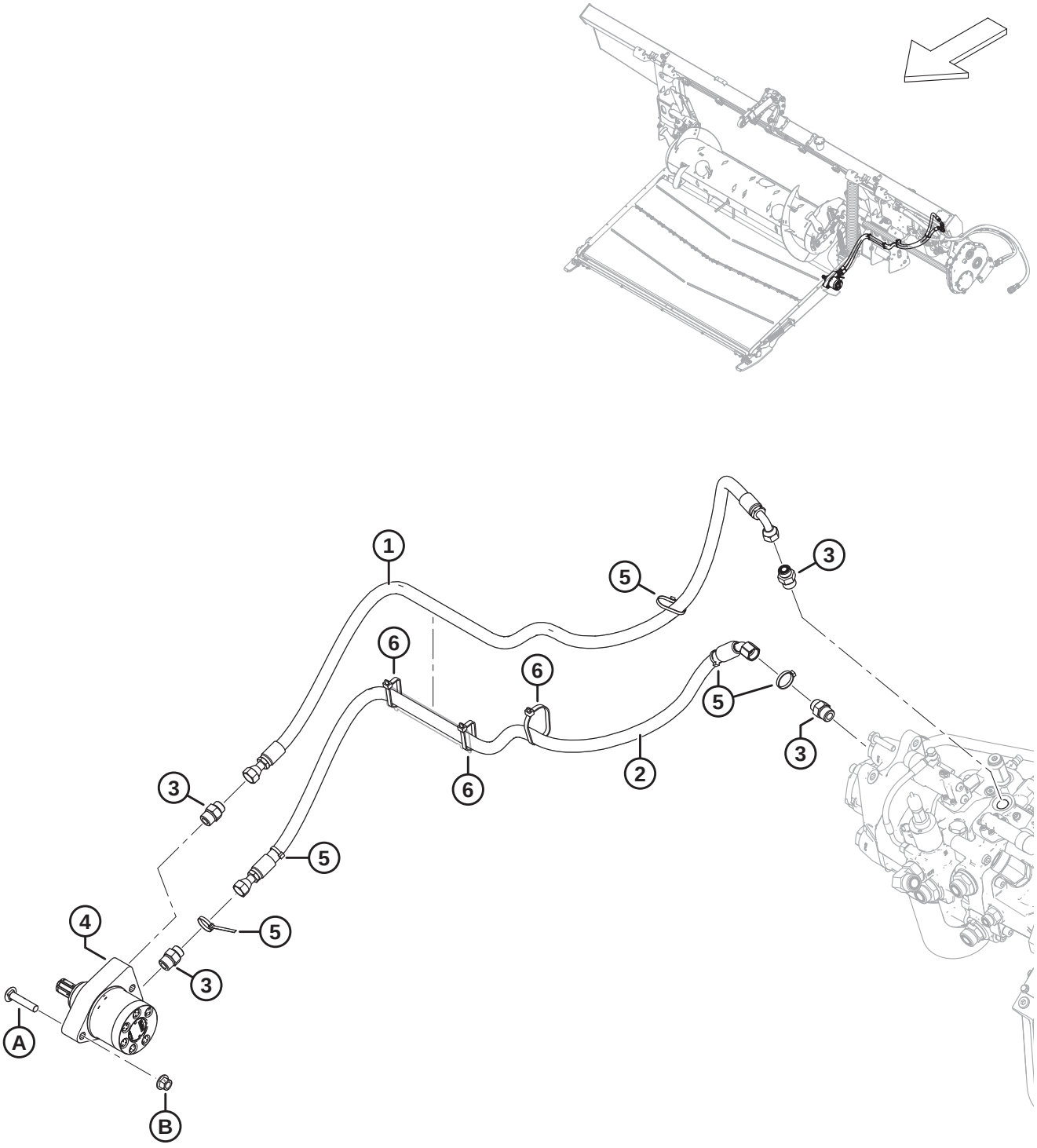

Ref	Part Number	Description	Qty	Serial Number
1	314396	HOSE – HYD, FEED DRAPER RETURN	1	
2	314395	HOSE – HYD, FEED DRAPER PRESSURE	1	
3	184463	FITTING – ADAPTER HYD	4	
4	295853	MOTOR – HYD (FEED DECK)	1	
	245316	SEAL KIT		
5	21763	FASTENER – CABLE TIE, BLACK 160 MM LG	5	
6	30753	FASTENER – CABLE TIE, BLACK 305 MM LG	3	
A	136308	BOLT – RHSSN M12 X 1.75 X 60-8.8-ZINC		
B	136431	NUT – HEX FLG CTR LOC M12 X 1.75-10		

178 Hydraulics – Suction and Return (Integrated Hydraulic System)

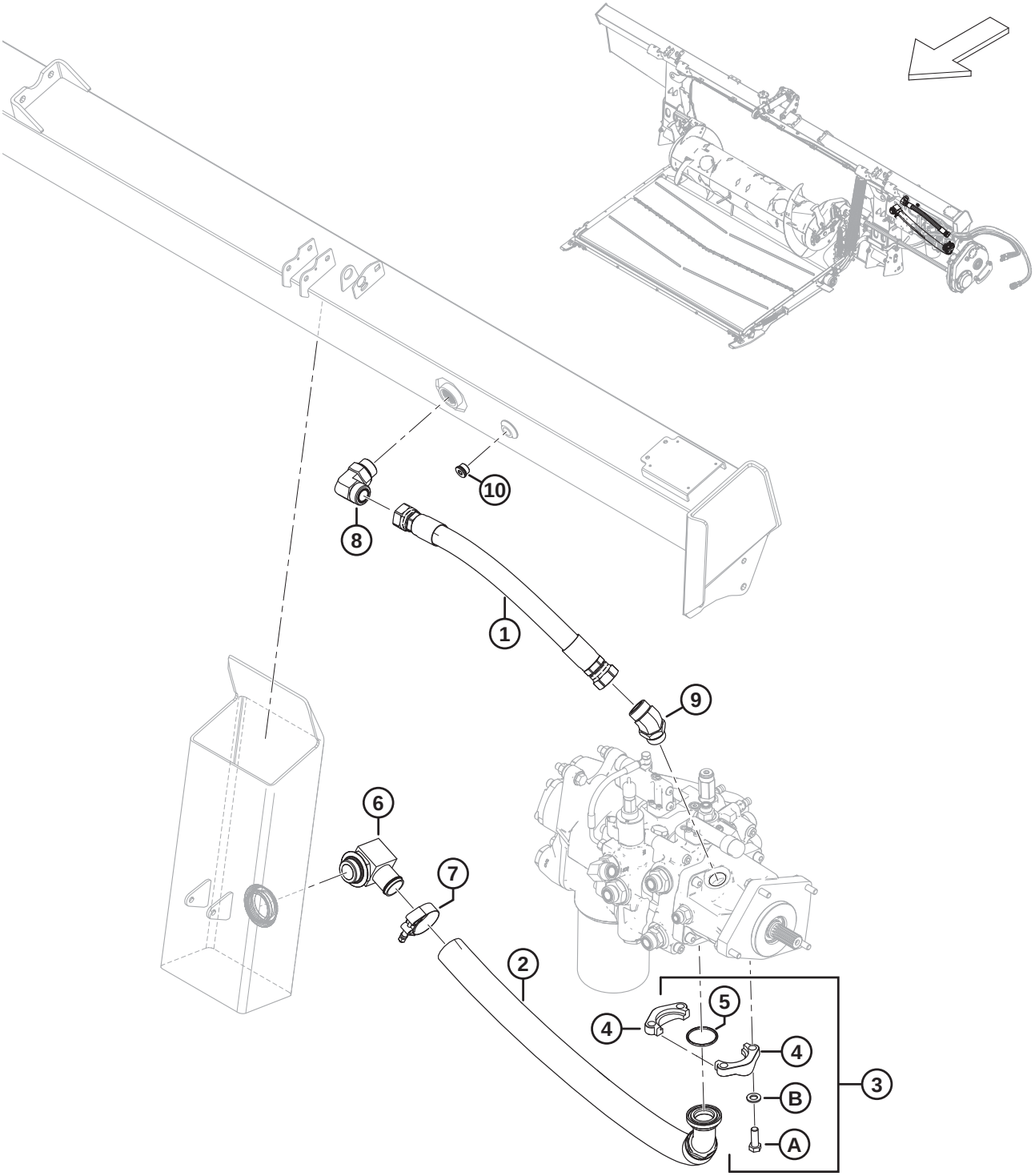

Ref	Part Number	Description	Qty	Serial Number
1	314402	HOSE – HYD, RETURN	1	
2	314389	HOSE – HYD, SUCTION	1	
3	314537	KIT – SPLIT FLANGE, 1.5 IN. CD61-1 [728]	1	
4	136106	FLANGE – HALF SPLIT 1.5 IN.	2	
5	135400	O-RING – 3.53 X 47.22	1	
6	111545	FITTING – ELBOW HYD HOSE ADAPTER	1	
7	245753	CLAMP – T BOLT	1	
8	135734	FITTING – ELBOW 90° HYD	1	
	50220	O-RING – Ø2.95 X Ø29.74		
	135554	O-RING – 1.78 X 23.52		
9	252814	FITTING – ELBOW 45° HYD	1	
	135554	O-RING – 1.78 X 23.52		
	50220	O-RING – Ø2.95 X Ø29.74		
10	**158174**	**FITTING – PLUG HYD 8 ORB HEX SOC** [729]	**1**	
	44209	**O-RING – 2.21 X 16.36**		
A	152730	BOLT – HEX HD TFL M12 X 1.75 X 35-10.9-AA1J		
B	184714	WASHER – FLAT REG M12-300HV		

728. The kit includes two 1.5 inch half split flange (MD #136106), O-ring (MD #135400), four bolts (MD #152730), and four washers (MD #184714).
729. Plug fitting (MD #158174) is used only for units with newer float module frames as shown in the illustration.

179 Hydraulics – Feed Deck (Modular Hydraulic System)

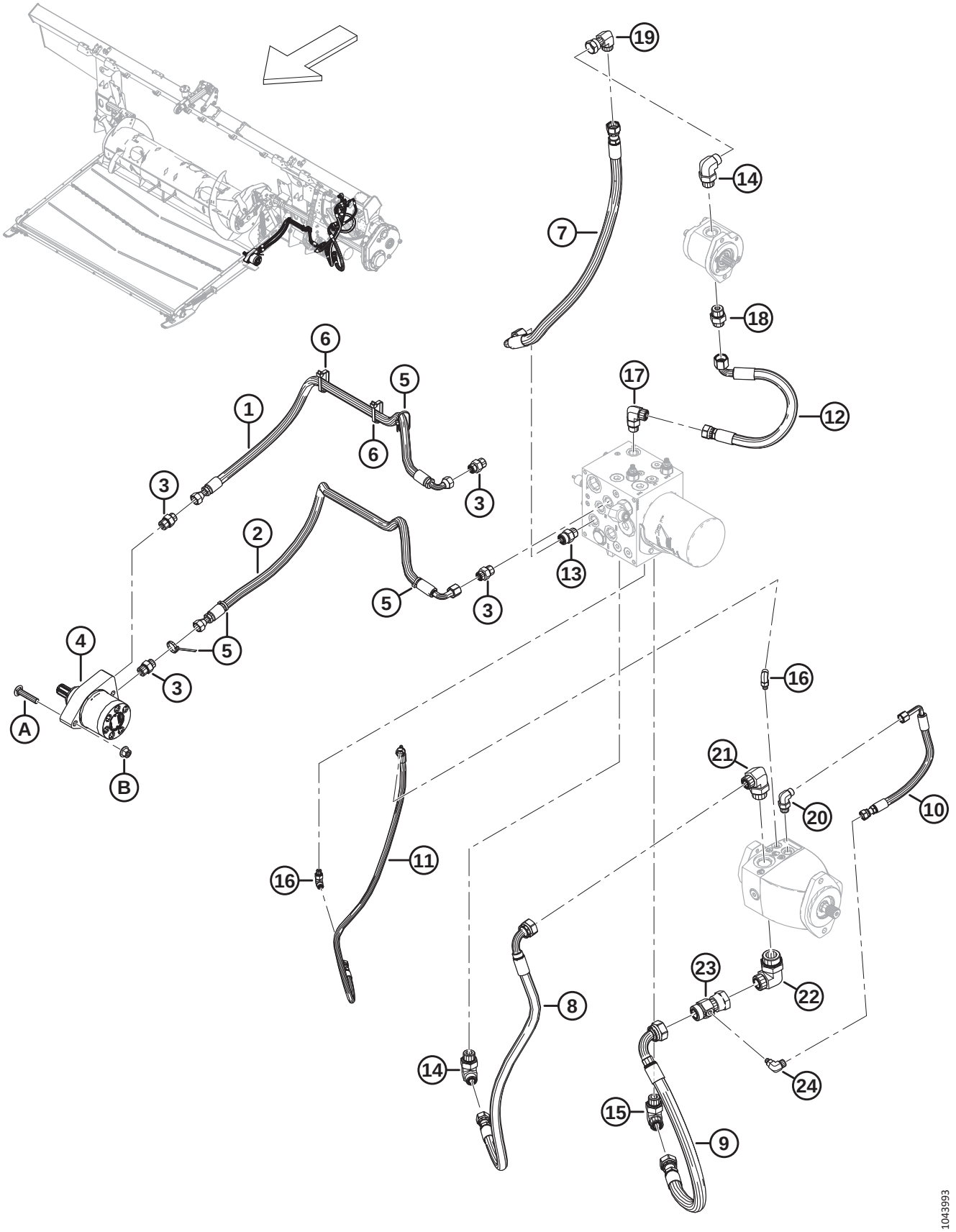

Ref	Part Number	Description	Qty	Serial Number
1	368675	HOSE – HYD, FEED DECK (1170 MM LG) [730]	1	
2	368674	HOSE – HYD, FEED DECK (1150 MM LG) [731]	1	
3	184463	FITTING – ADAPTER HYD	4	
4	295853	MOTOR – HYD (FEED DECK)	1	
	245316	SEAL KIT		
5	21763	FASTENER – CABLE TIE, BLACK 160 MM LG	4	
6	30753	FASTENER – CABLE TIE, BLACK 305 MM LG	2	
7	368677	HOSE – HYD	1	
8	368678	HOSE – HYD, DRAPER PRESSURE	1	
9	369679	HOSE – HYD, DRAPER RETURN	1	
10	368684	HOSE – HYD	1	
11	368685	HOSE – HYD	1	
12	368686	HOSE – HYD	1	
13	184461	FITTING – ADAPTER HYD	1	
	44210	O-RING – 2.46 X 19.18		
	135867	O-RING – 1.78 X 15.60		
14	136347	FITTING – ELBOW 90° HYD	2	
	30971	O-RING – 2.95 X 23.47		
	135867	O-RING – 1.78 X 15.60		
15	135821	FITTING – ELBOW 90° HYD	1	
	30971	O-RING – 2.95 X 23.47		
	135868	O-RING – 1.78 X 18.77		
16	136447	FITTING – ELBOW 90° HYD	2	
	50223	O-RING – 1.83 X 8.92		
	135957	O-RING – 1.78 X 7.65		
17	136089	FITTING – ELBOW 90° HYD	1	
	44210	O-RING – 2.46 X 19.18		
	135867	O-RING – 1.78 X 15.60		
18	135786	FITTING – ADAPTER	1	
	30971	O-RING – 2.95 X 23.47		
	135867	O-RING – 1.78 X 15.60		
19	136846	FITTING – ELBOW 90° HYD	1	
	135867	O-RING – 1.78 X 15.60		
20	136149	FITTING – ELBOW 90°HYD	1	
	44209	O-RING – 2.21 X 16.36		
	135865	O-RING – 1.78 X 9.25		

730. 1170 mm long.
731. 1150 mm long.

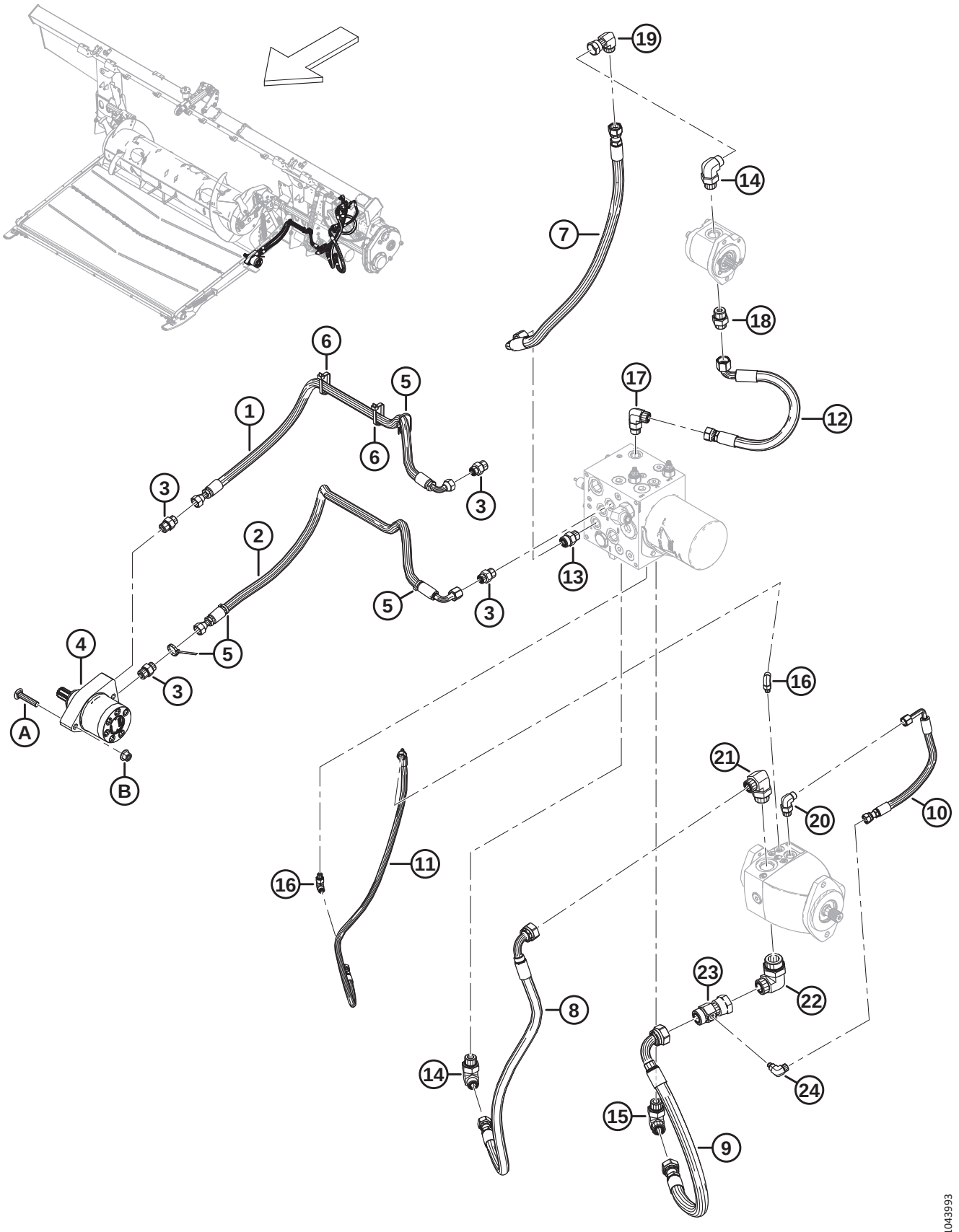
19
14
7
18
6
17
12
1
5
6
3
3
2
13
5
3
4
5
3
A
B
16
21
20
10
16
11
23
22
8
14
24
15
9
1043993

Ref	Part Number	Description	Qty	Serial Number
21	135901	FITTING – ELBOW 90° HYD	1	
	50220	O-RING – 2.95 X 29.74		
	135868	O-RING – 1.78 X 18.77		
22	136766	FITTING – ELBOW 90° HYD	1	
	50222	O-RING – 3.00 X 37.47		
	135554	O-RING – 1.78 X 23.52		
23	252554	FITTING – TEE HYD, GAUGE PORT	1	
	135868	O-RING – 1.78 X 18.77		
24	136337	FITTING – ELBOW 90° HYD	1	
	50223	O-RING – 1.83 X 8.92		
	135865	O-RING – 1.78 X 9.25		
A	136308	BOLT – RHSSN M12 X 1.75 X 60-8.8-ZINC		
B	136431	NUT – HEX FLG CTR LOC M12 X 1.75-10		

180 Hydraulics – Suction and Return (Modular Hydraulic System)

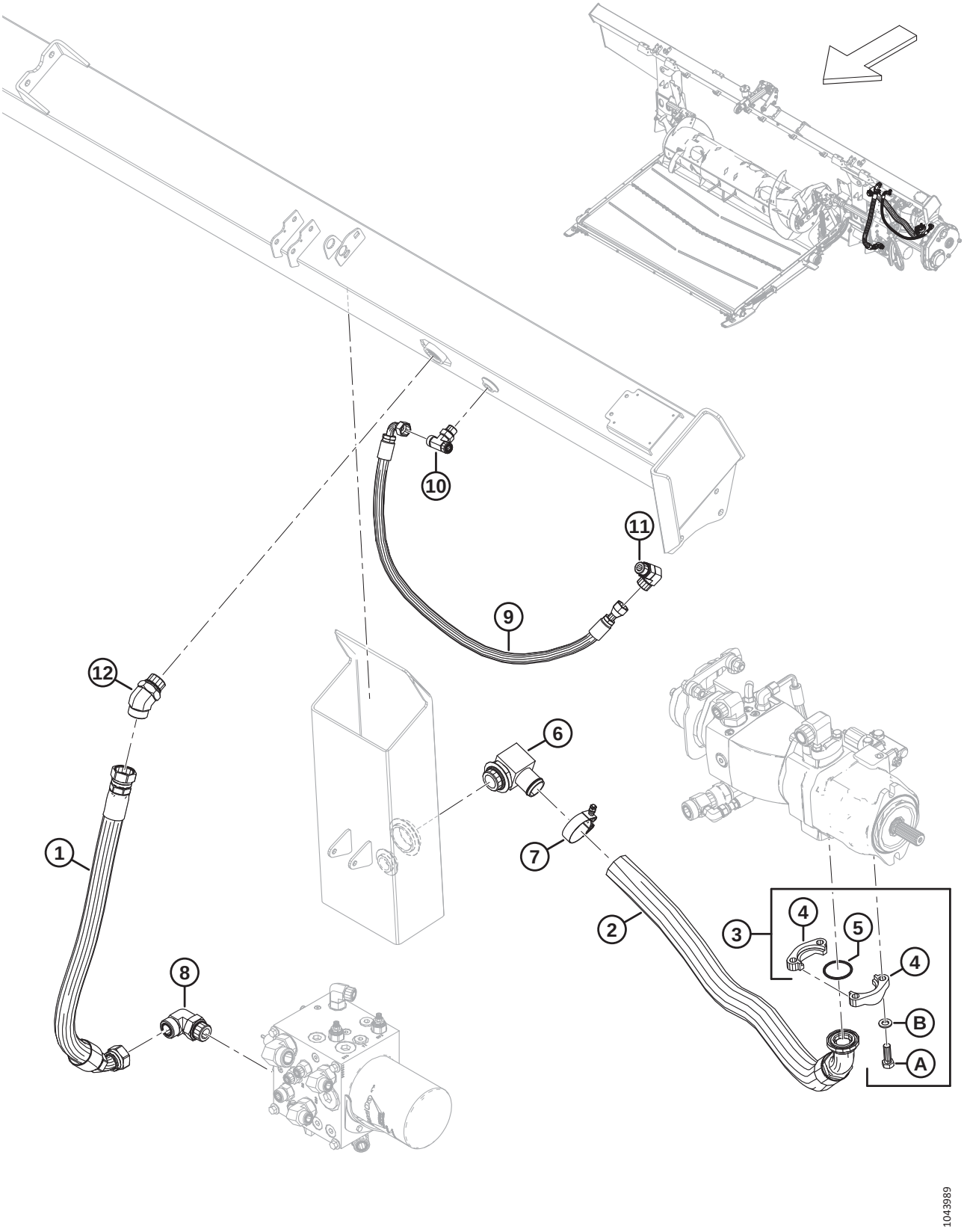

Ref	Part Number	Description	Qty	Serial Number
1	368673	HOSE – HYD	1	
2	314389	HOSE – HYD, SUCTION	1	
3	136246	KIT – SPLIT FLANGE, 1.5 IN. CD61-1 [732]	1	
4	136106	FLANGE – HALF SPLIT 1.5 IN.	2	
5	135400	O-RING – 3.53 X 47.22	1	
6	111545	FITTING – ELBOW HYD HOSE ADAPTER	1	
	136483	O-RING – 3 X 43.69		
7	245753	CLAMP – T BOLT	1	
8	135734	FITTING – ELBOW 90° HYD	1	
	50220	O-RING – 2.95 X 29.74		
	135554	O-RING – 1.78 X 23.52		
9	378372	HOSE – HYD, KNIFE CASE DRAIN	1	
10	136684	FITTING – TEE HYD	1	
	44209	O-RING – 2.21 X 16.36		
	135866	O-RING – 1.78 X 12.42		
11	136089	FITTING – ELBOW 90° HYD	1	
	44210	O-RING – 2.46 X 19.18		
	135867	O-RING – 1.78 X 15.60		
12	252814	FITTING – ELBOW 45° HYD	1	
	50220	O-RING – 2.95 X 29.74		
	135554	O-RING – 1.78 X 23.52		
A	252641	BOLT – HEX HD 1/2-13 X 1.5-GR8-AA3L		
B	184714	WASHER – FLAT REG M12-300HV		

732. The kit includes two 1.5 inch half split flange (MD #136106), O-ring (MD #135400), four bolts (MD #252641), and four washers (MD #184714).

181 Hydraulics – Drives and Float Module Manifold (Modular Hydraulic System)

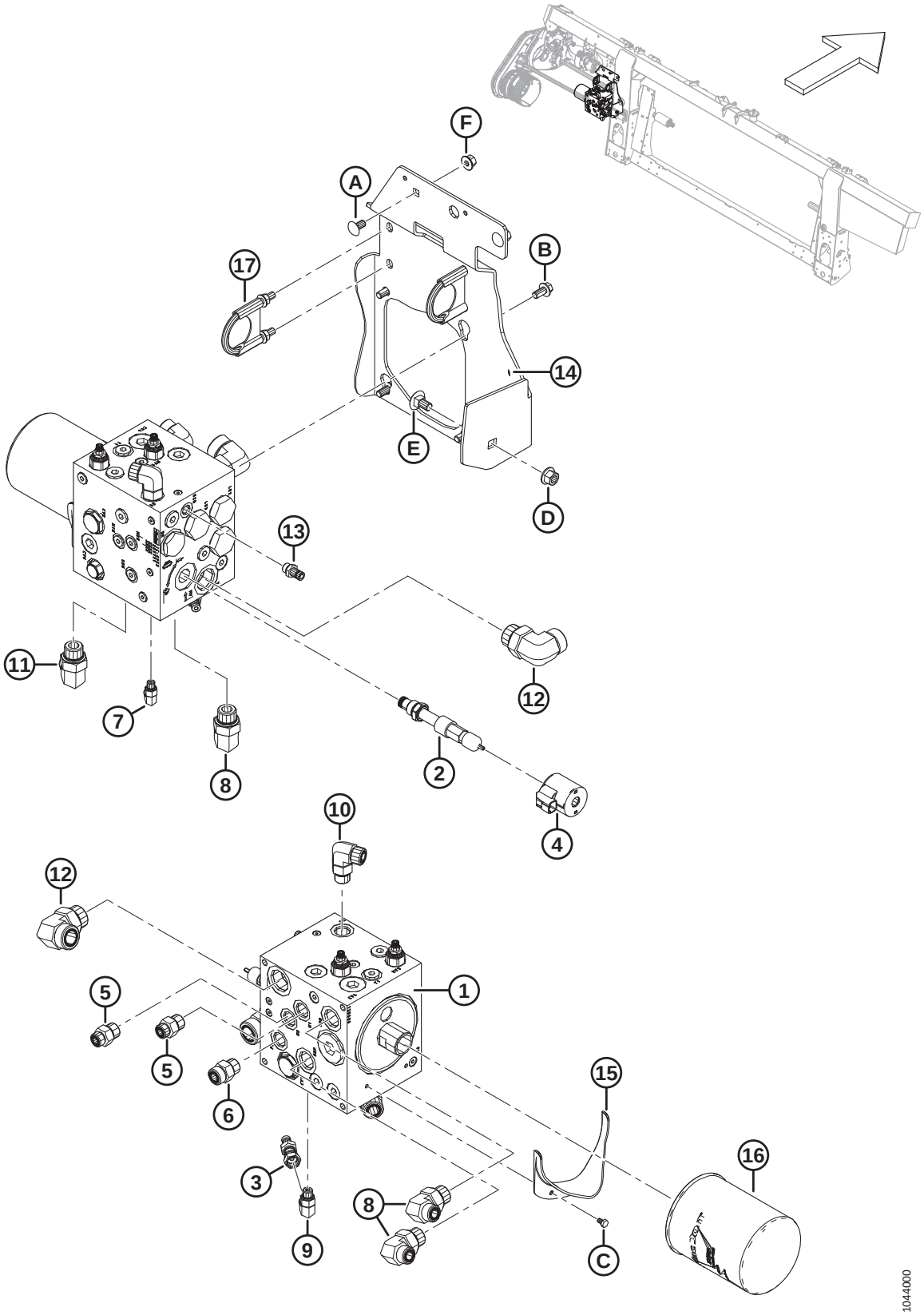

Ref	Part Number	Description	Qty	Serial Number
1	287771	ASSEMBLY – MANIFOLD, DRIVE [733]	1	
2	276631	VALVE – FLOW CONTROL	1	
	220908	SEAL KIT		
3	252662	FITTING – NIPPLE HYD	1	
4	209045	COIL – SOLENOID	1	
5	184463	FITTING – ADAPTER HYD	2	
	44210	O-RING – 2.46 X 19.18		
	135866	O-RING – 1.78 X 12.42		
6	184461	FITTING – ADAPTER HYD	1	
	44210	O-RING – 2.46 X 19.18		
	135867	O-RING – 1.78 X 15.60		
7	136447	FITTING – ELBOW 90° HYD	1	
	50223	O-RING – 1.83 X 8.92		
	135957	O-RING – 1.78 X 7.65		
8	136347	FITTING – ELBOW 90° HYD	3	
	135867	O-RING – 1.78 X 15.60		
	30971	O-RING – 2.95 X 23.47		
9	136095	FITTING – ELBOW 90° HYD	1	
	135865	O-RING – 1.78 X 9.25		
	50219	O-RING – 1.98 X 11.89		
10	136089	FITTING – ELBOW 90° HYD	1	
	44210	O-RING – 2.46 X 19.18		
	135867	O-RING – 1.78 X 15.60		
11	135821	FITTING – ELBOW 90° HYD	1	
	30971	O-RING – 2.95 X 23.47		
	135868	O-RING – 1.78 X 18.77		
12	135734	FITTING – ELBOW 90° HYD	2	
	50220	O-RING – 2.95 X 29.74		
	135554	O-RING – 1.78 X 23.52		
13	135587	NIPPLE – HYDRAULIC	1	
	50219	O-RING – 1.98 X 11.89		
14	323996	BRACKET – MANIFOLD SUPPORT	1	
15	213743	FLANGE – OIL DRAIN SPOUT	1	
16	320360	FILTER – HYD C/W 2X SEALS	1	

733. For service parts, refer to Section *182 Hydraulics – Drive Manifold Assembly, Service Parts (Modular Hydraulic System), page 501*.

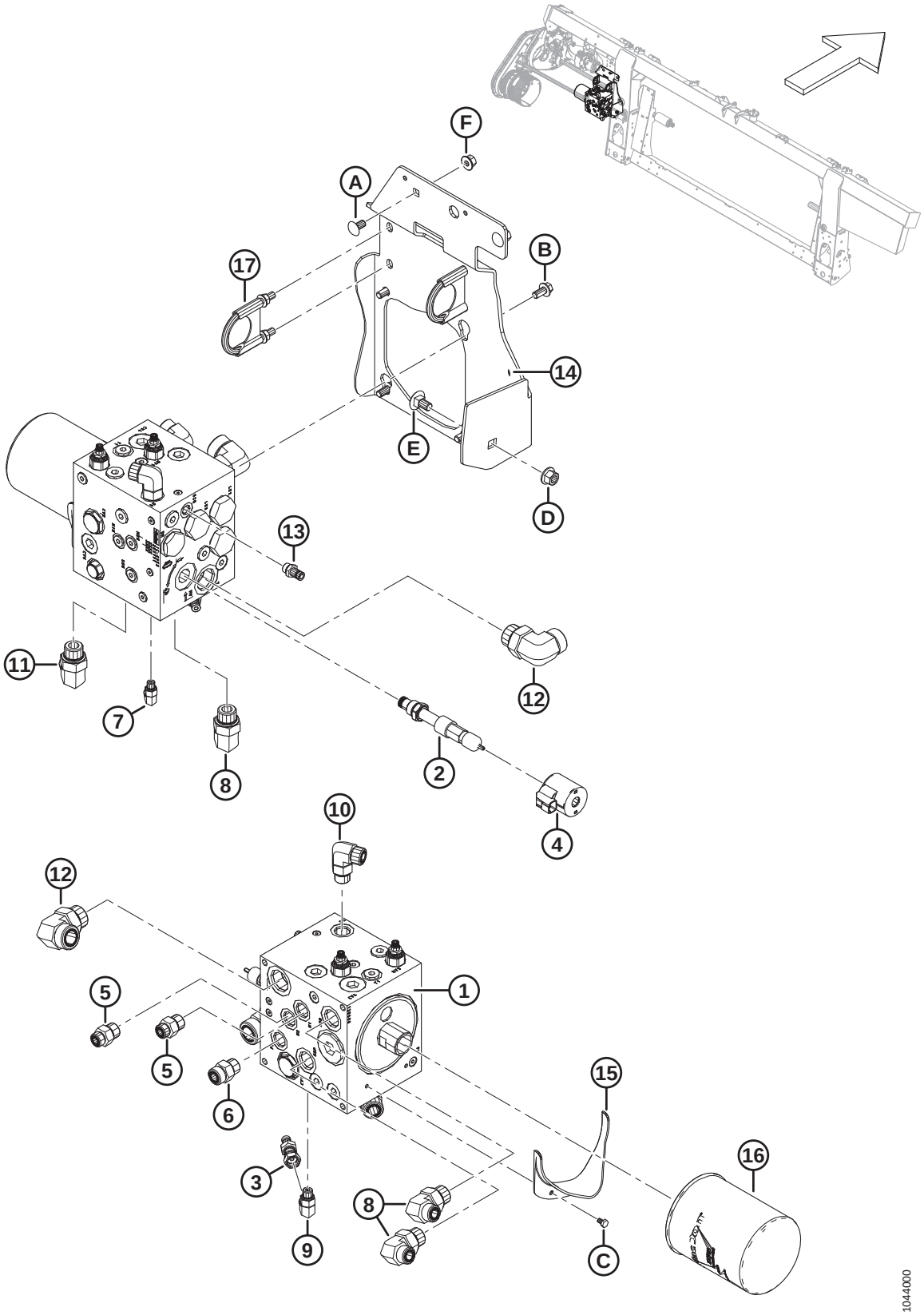
F
A
B
17
14
E
D
13
11
12
7
8
2
4
10
12
1
5
5
6
15
16
3
8
9
C
1044000

Ref	Part Number	Description	Qty	Serial Number
17	**136109**	**CLAMP – U-BOLT** [734]	**2**	
	287702	**DECAL – FLOAT LOCK, LH** [735]	**1**	
A	**184657**	**BOLT – RHSSN M10 X 1.5 X 20-8.8-AA1J**		
B	**152655**	**BOLT – HEX FLG HD M10 X 1.5 X 20-8.8-AA1J**		
C	**136561**	**BOLT – HEX HD TFL M6 X 1 X 10-8.8-AA1J**		
D	**136431**	**NUT – HEX FLG CTR LOC M12 X 1.75-10**		
E	**135903**	**BOLT – RHSN M12 X 1.75 X 25-8.8-ZINC**		
F	**135799**	**NUT – HEX FLG CTR LOC M10 X 1.5-10**		

734. Includes two lock nuts.

735. This decal is attached to the manifold support bracket. For float module decals, refer to Section *190 Decals and Reflectors – FM200, page 523*.

182 Hydraulics – Drive Manifold Assembly, Service Parts (Modular Hydraulic System)

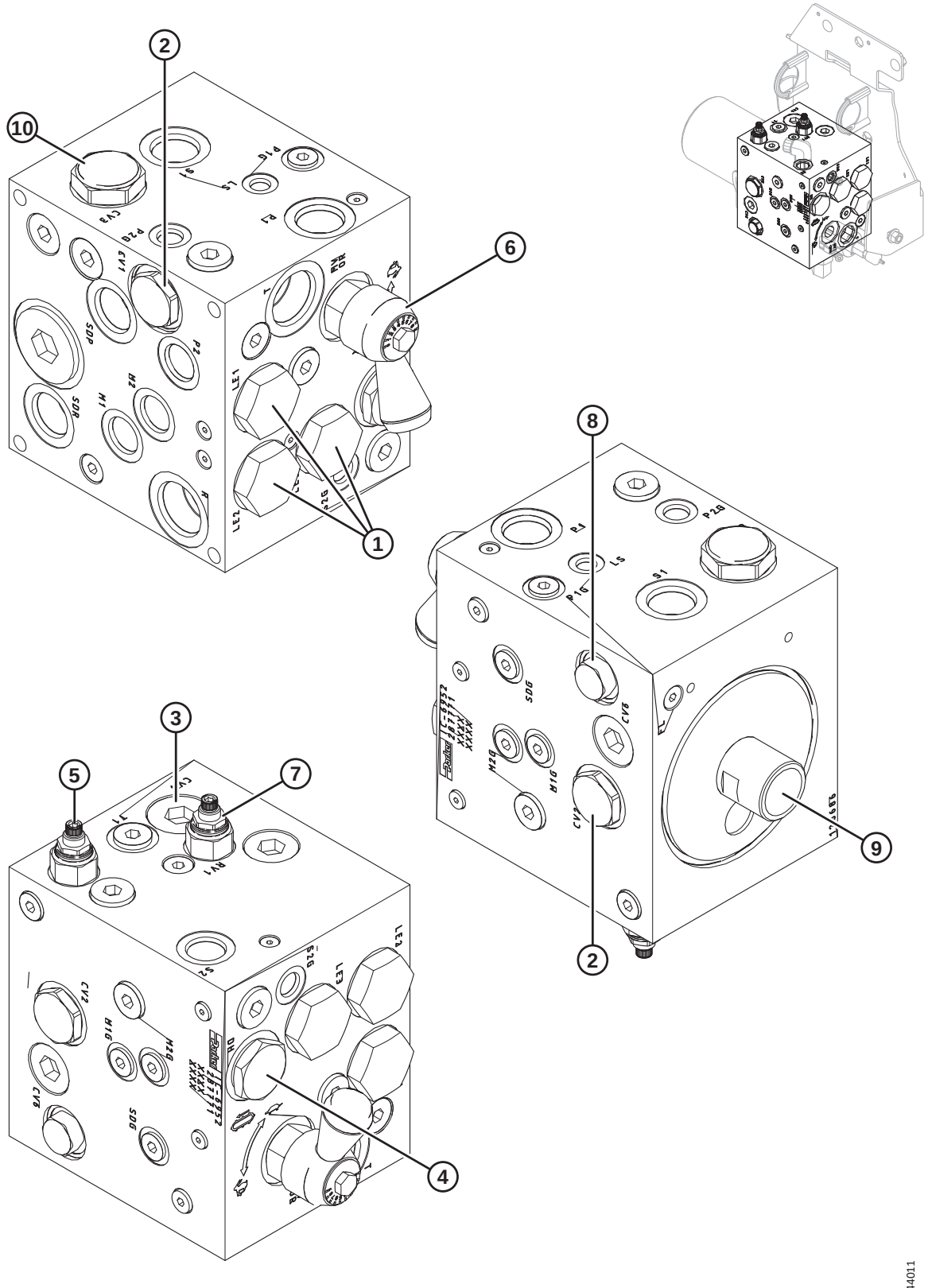

Ref	Part Number	Description	Qty	Serial Number
	287771	**ASSEMBLY – MANIFOLD, DRIVE** [736]		
1	**287466**	**VALVE – LOGIC ELEMENT-16 (LE1, LE2, LE3)** [737]	**3**	
	220963	**SEAL KIT**		
2	**287467**	**VALVE – VENTED CHECK-12 (CV1, CV2)** [738]	**2**	
	220965	**SEAL KIT**		
3	**287468**	**VALVE – BYPASS, 25 PSI (CV4)** [739]	**1**	
4	**287469**	**VALVE – DIVERTER (DH)** [740]	**1**	
	287473	**SEAL KIT**		
5	**220951**	**VALVE – P.O. RELIEF, 2500 PSI (RV2)** [741]	1	
	220960	**SEAL KIT**		
6	**287470**	**VALVE – NEEDLE (MVOR)** [742]	**1**	
	287193	**HANDLE – FLOW CONTROL** [742]		
	220960	**SEAL KIT**		
7	**287613**	**VALVE – RELIEF, 1500 PSI (RV1)** [743]	**1**	
	220960	**SEAL KIT**		
8	**287471**	**VALVE – CHECK-08 (CV6)** [744]	**1**	
	220965	**SEAL KIT**		
9	**245160**	**FITTING – FILTER ADAPTER**	**1**	
10	**287472**	**VALVE – CHECK REG-16, 8 PSI (CV3)** [745]	**1**	
	220961	**SEAL KIT**		

736. Refer to Section *181 Hydraulics – Drives and Float Module Manifold (Modular Hydraulic System), page 497*.
737. Valve connects to ports LE1, LE2, and LE3.
738. Valve connects to ports CV1 and CV2.
739. Bypass valve (MD #287468) is located underneath plug. Valve connects to port CV4.
740. Valve connects to port DH.
741. Valve connects to port RV2.
742. The needle valve / flow control handle is not used with FM200 Float Modules; remove the needle valve / flow control handle before installing a replacement manifold.
743. Valve connects to port RV1.
744. Valve connects to port CV6.
745. Valve connects to port CV3.

183 Hydraulics – Double Reel, Float Module to Header Manifold (Integrated Hydraulic System)

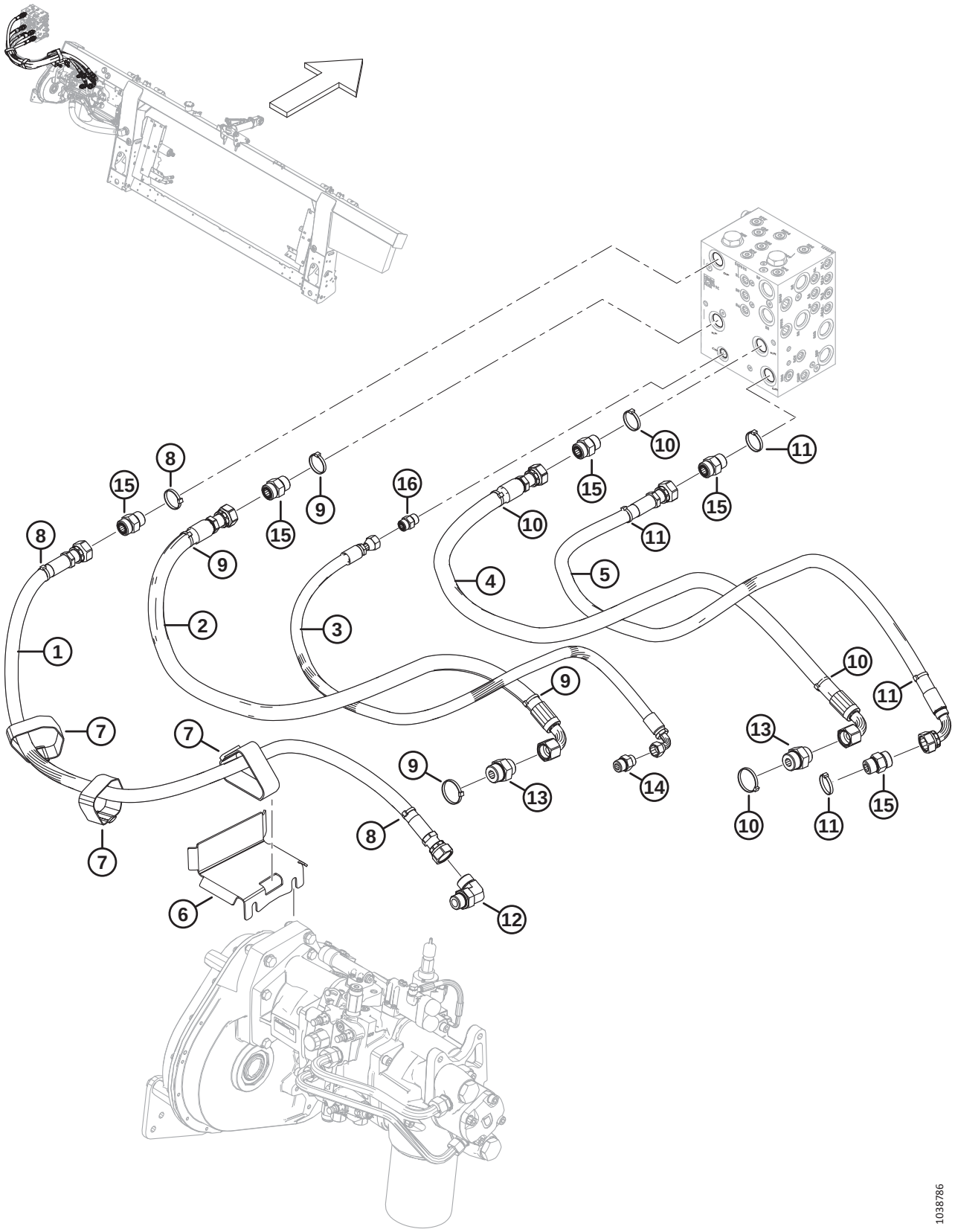

Ref	Part Number	Description	Qty	Serial Number
1	322256	HOSE – HYD, SDP	1	
2	314391	HOSE – HYD, KP	1	
3	314401	HOSE – HYD, CD	1	
4	314392	HOSE – HYD, KR	1	
5	314394	HOSE – HYD, SDR	1	
6	335887	HOLDER – HOSE	1	
7	347979	CINCH STRAP – 16 IN. LG	3	
8	49227	FASTENER – CABLE TIE, GREEN	3	
9	40704	FASTENER – CABLE TIE, ORANGE	4	
10	40703	FASTENER – CABLE TIE, BLUE	4	
11	40702	FASTENER – CABLE TIE, RED	4	
12	135821	FITTING – ELBOW 90° HYD	1	
	30971	O-RING – Ø2.95 X Ø23.47		
	135868	O-RING – Ø1.78 X Ø18.77		
13	135789	FITTING – ADAPTER	2	
	50220	O-RING – Ø2.95 X Ø29.74		
	135868	O-RING – Ø1.78 X Ø18.77		
14	184463	FITTING – ADAPTER HYD	1	
	44210	O-RING – Ø2.46 X Ø19.18		
	135866	O-RING – Ø1.78 X Ø12.42		
15	135788	FITTING – ADAPTER	5	
	30971	O-RING – Ø2.95 X Ø23.47		
	135868	O-RING – Ø1.78 X Ø18.77		
16	135780	FITTING – ADAPTER	1	
	44209	O-RING – Ø2.21 X Ø16.36		
	135866	O-RING – Ø1.78 X Ø12.42		

184 Hydraulics – Triple Reel, Float Module to Header Manifold (Integrated Hydraulic System)

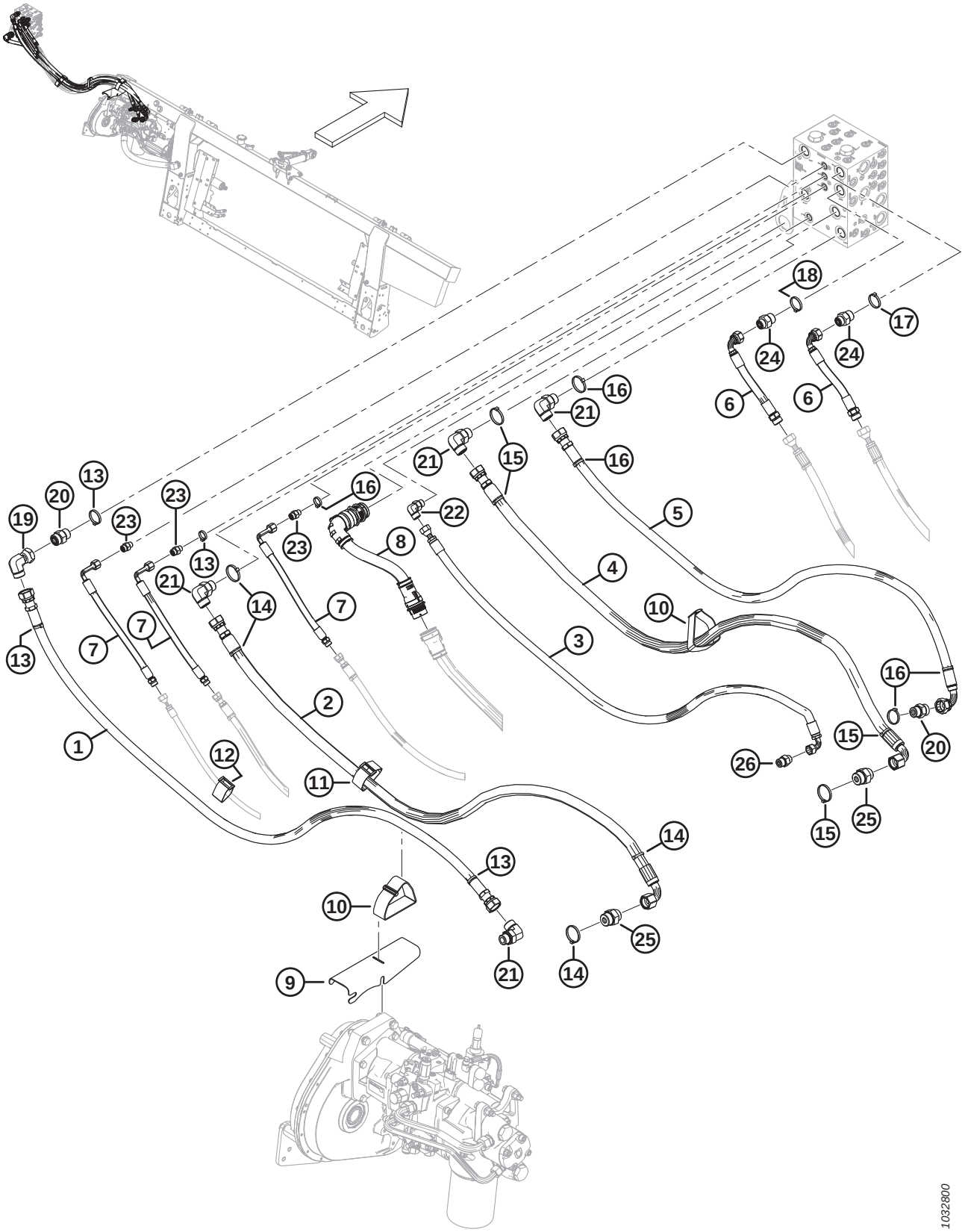

HYDRAULICS – TRIPLE REEL, FLOAT MODULE TO HEADER MANIFOLD (INTEGRATED HYDRAULIC SYSTEM)

Ref	Part Number	Description	Qty	Serial Number
1	314593	HOSE – HYD, SDP WIDE	1	
2	314591	HOSE – HYD, KP WIDE	1	
3	314595	HOSE – HYD, CD WIDE	1	
4	314592	HOSE – HYD, KR WIDE	1	
5	314594	HOSE – HYD, SDR WIDE	1	
6	314606	HOSE – HYD, REEL DRIVE EXT	2	
7	314605	HOSE – HYD, REEL F/A/L EXT	3	
8	335133	HARNESS – WIDE FRAME EXT	1	
9	314697	SUPPORT – HOSE	1	
10	347979	CINCH STRAP – 16 IN. LG	2	
11	295927	CINCH STRAP – 8 IN. LG	1	
12	135444	CINCH STRAP – 6 IN. LG	1	
13	49227	FASTENER – CABLE TIE, GREEN	4	
14	40704	FASTENER – CABLE TIE, ORANGE	2	
15	40703	FASTENER – CABLE TIE, BLUE	2	
16	40702	FASTENER – CABLE TIE, RED	5	
17	49232	FASTENER – CABLE TIE, WHITE	1	
18	40701	FASTENER – CABLE TIE, YELLOW	1	
19	135888	FITTING – ELBOW 90° HYD	1	
	135868	O-RING – Ø1.78 X Ø18.77		
20	135788	FITTING – ADAPTER	2	
	30971	O-RING – Ø2.95 X Ø23.47		
	135868	O-RING – Ø1.78 X Ø18.77		
21	135821	FITTING – ELBOW 90° HYD	4	
	30971	O-RING – Ø2.95 X Ø23.47		
	135868	O-RING – Ø1.78 X Ø18.77		
22	136220	FITTING – ELBOW 90° HYD	1	
	44209	O-RING – Ø2.21 X Ø16.36		
	135866	O-RING – Ø1.78 X Ø12.42		
23	135778	FITTING – ADAPTER	3	
	50219	O-RING – Ø1.98 X Ø11.89		
	135865	O-RING – Ø1.78 X Ø9.25		
24	135786	FITTING – ADAPTER	2	
	30971	O-RING – Ø2.95 X Ø23.47		
	135867	O-RING – Ø1.78 X Ø15.60		

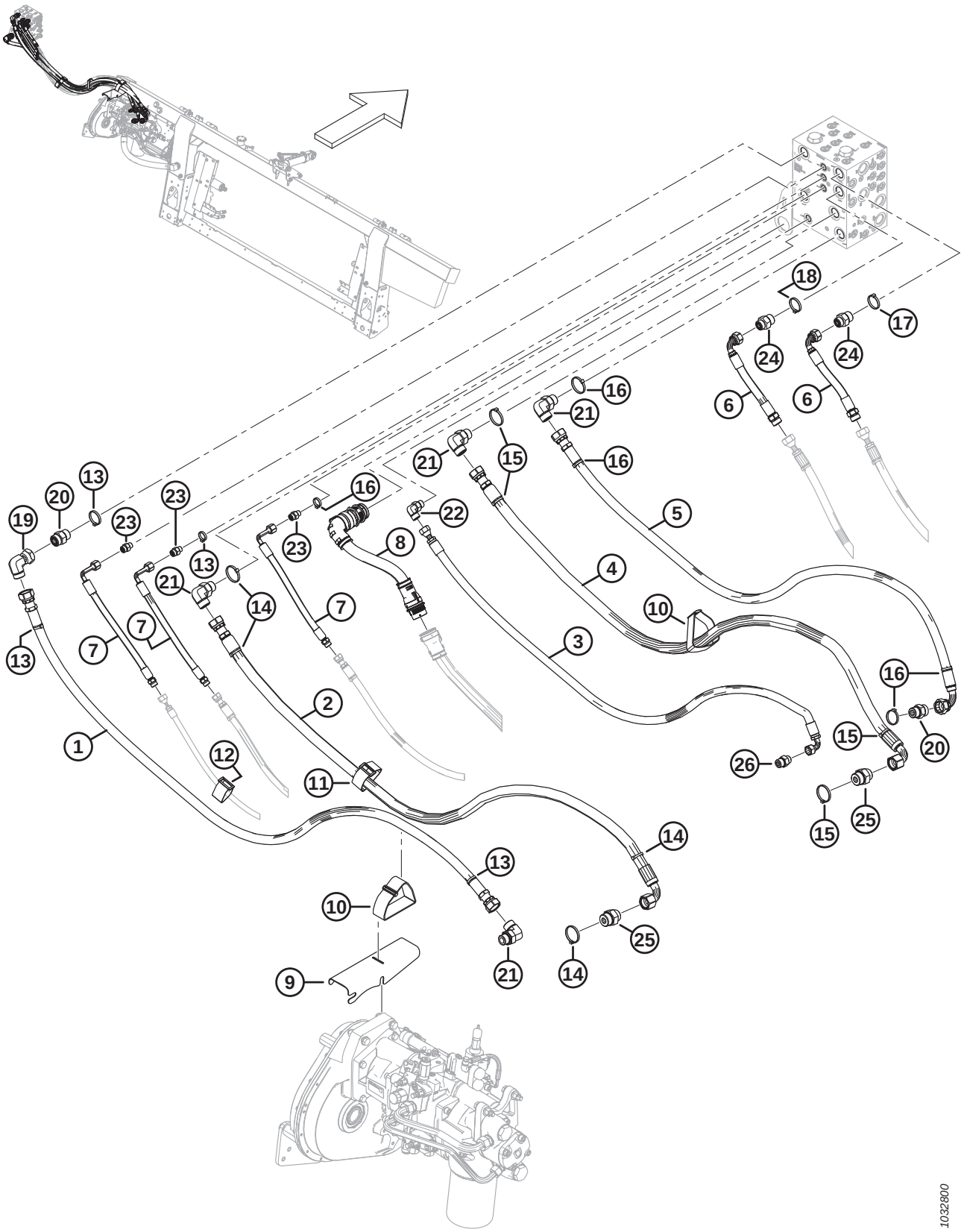
1
2
3
4
5
6
7
8
9
10
11
12
13
14
15
16
17
18
19
20
21
22
23
24
25
26
1032800

Ref	Part Number	Description	Qty	Serial Number
25	135789	FITTING – ADAPTER	2	
	50220	O-RING – Ø2.95 X Ø29.74		
	135868	O-RING – Ø1.78 X Ø18.77		
26	184463	FITTING – ADAPTER HYD	1	
	44210	O-RING – Ø2.46 X Ø19.18		
	135866	O-RING – Ø1.78 X Ø12.42		

185 Hydraulics – Double Reel, Float Module to Header Manifold (Modular Hydraulic System)

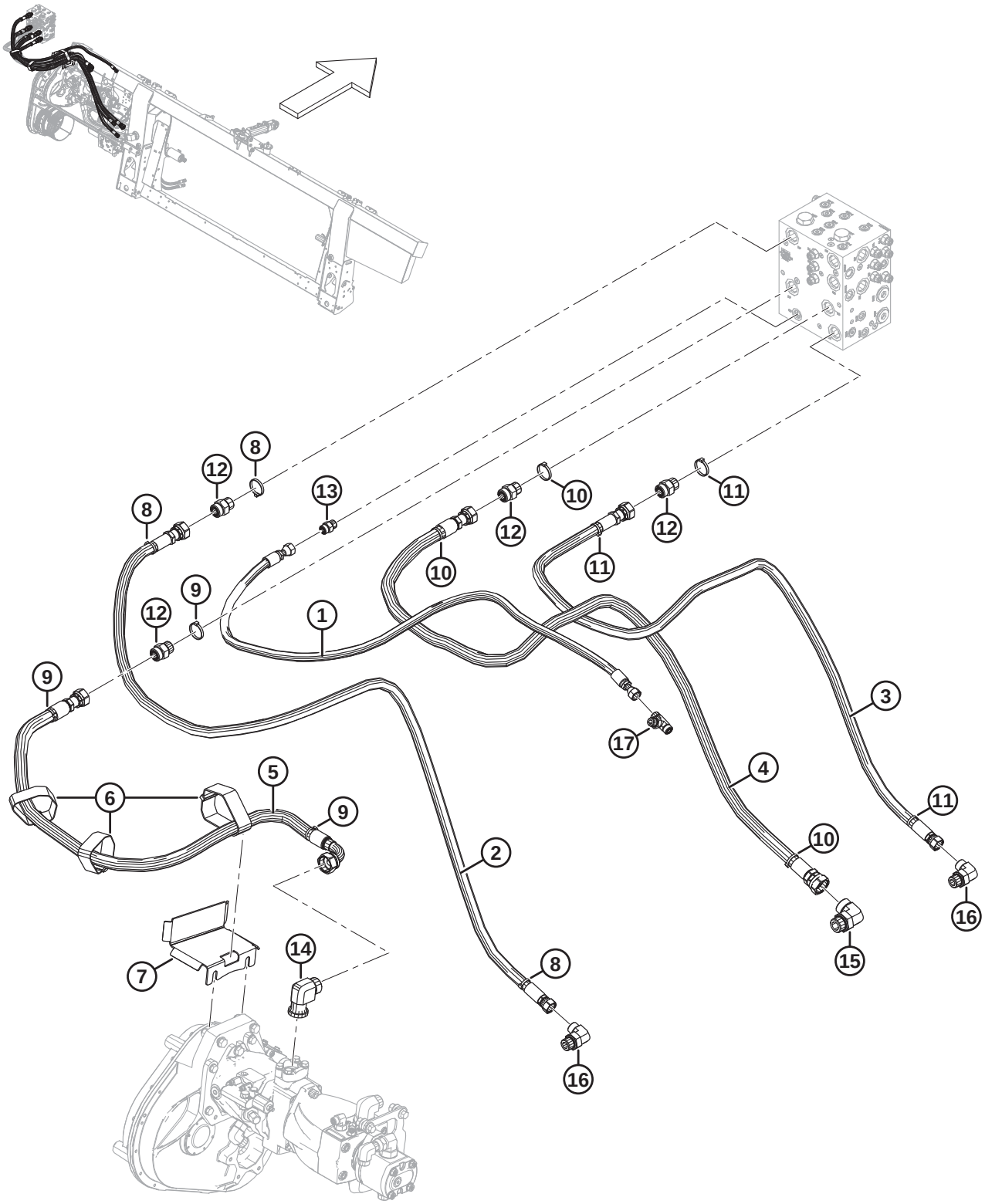

HYDRAULICS – DOUBLE REEL, FLOAT MODULE TO HEADER MANIFOLD (MODULAR HYDRAULIC SYSTEM)

Ref	Part Number	Description	Qty	Serial Number
1	378373	HOSE – HYD, CASE DRAIN	1	
2	368692	HOSE – HYD, SDP	1	
3	368691	HOSE – HYD, SDR	1	
4	368690	HOSE – HYD, KNIFE RETURN	1	
5	368689	HOSE – HYD, KNIFE PRESSURE	1	
6	347979	CINCH STRAP – 16 IN. LG	3	
7	335887	HOLDER – HOSE	1	
8	49227	FASTENER – CABLE TIE, GREEN	3	
9	40704	FASTENER – CABLE TIE, ORANGE	3	
10	40703	FASTENER – CABLE TIE, BLUE	3	
11	40702	FASTENER – CABLE TIE, RED	3	
12	135788	FITTING – ADAPTER	4	
	30971	O-RING – 2.95 X 23.47		
	135868	O-RING – 1.78 X 18.77		
13	135780	FITTING – ADAPTER	1	
	44209	O-RING – 2.21 X 16.36		
	135866	O-RING – 1.78 X 12.42		
14	252208	FITTING – 90° 16-16 CODE61-ORFS	1	
	112868	O-RING – 3.53 X 32.92		
	135554	O-RING – 1.78 X 23.52		
15	135734	FITTING – ELBOW 90° HYD	1	
	50220	O-RING – 2.95 X 29.74		
	135554	O-RING – 1.78 X 23.52		
16	136347	FITTING – ELBOW 90° HYD	2	
	30971	O-RING – 2.95 X 23.47		
	135867	O-RING – 1.78 X 15.60		
17	136684	FITTING – TEE HYD		
	44209	O-RING – 2.21 X 16.36		
	135866	O-RING – 1.78 X 12.42		

186 Hydraulics – Triple Reel, Float Module to Header Manifold (Modular Hydraulic System)

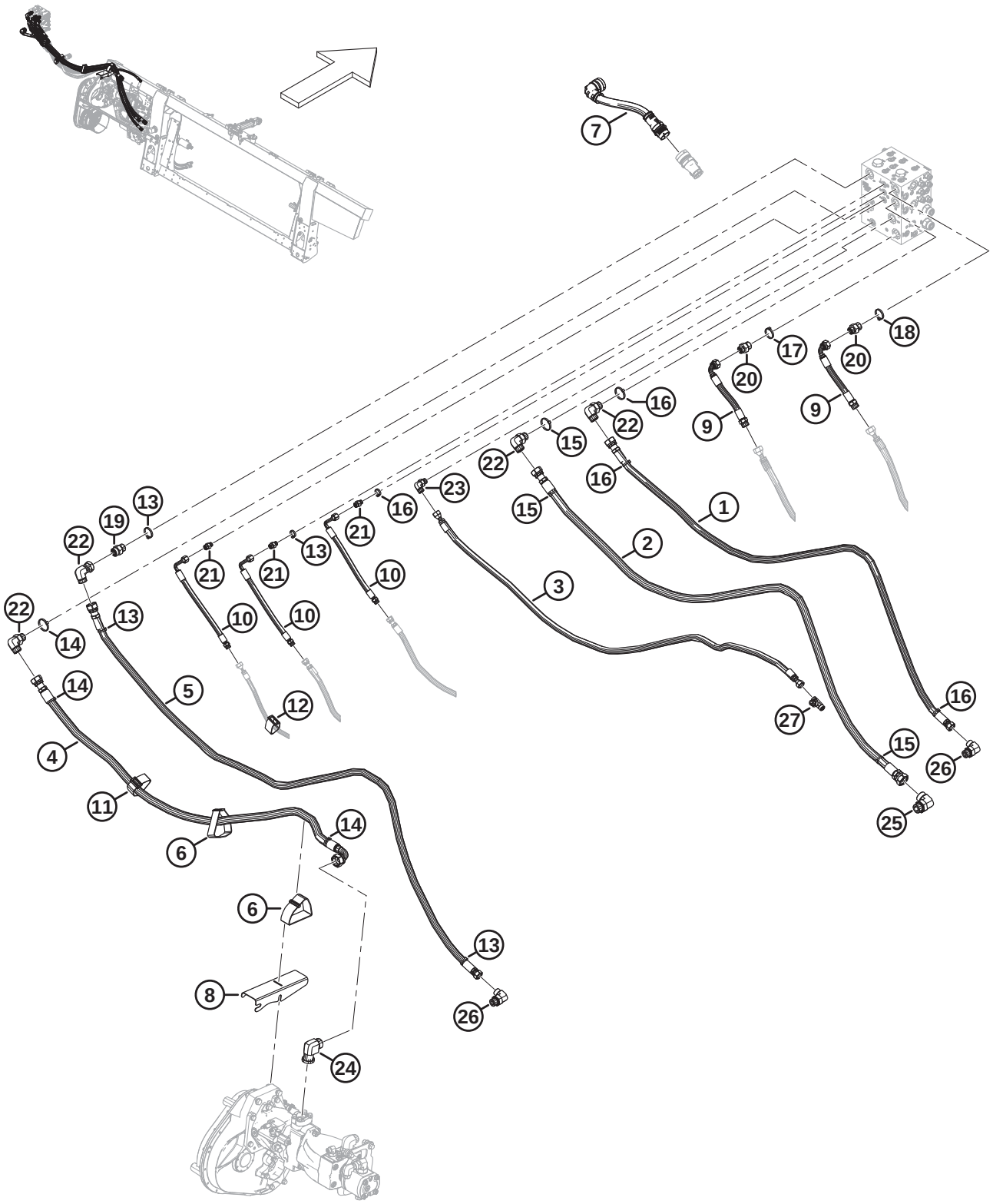

Ref	Part Number	Description	Qty	Serial Number
1	378254	HOSE – HYD, SDR	1	
2	378253	HOSE – HYD, KNIFE RETURN	1	
3	378252	HOSE – HYD, CD	1	
4	378251	HOSE – HYD, KNIFE PRESSURE	1	
5	378250	HOSE – HYD, SDP	1	
6	347979	CINCH STRAP – 16 IN. LG	2	
7	335133	HARNESS – WIDE FRAME EXT	1	
8	314697	SUPPORT – HOSE	1	
9	314606	HOSE – HYD, REEL DRIVE EXT	2	
10	314605	HOSE – HYD, REEL F/A/L EXT	3	
11	295927	CINCH STRAP – 8 IN. LG	1	
12	135444	CINCH STRAP – 6 IN. LG	1	
13	49227	FASTENER – CABLE TIE, GREEN	4	
14	40704	FASTENER – CABLE TIE, ORANGE	3	
15	40703	FASTENER – CABLE TIE, BLUE	3	
16	40702	FASTENER – CABLE TIE, RED	4	
17	40701	FASTENER – CABLE TIE, YELLOW	1	
18	49232	FASTENER – CABLE TIE, WHITE	1	
19	135788	FITTING – ADAPTER	1	
	30971	O-RING – 2.95 X 23.47		
	135868	O-RING – 1.78 X 18.77		
20	135786	FITTING – ADAPTER	2	
	30971	O-RING – 2.95 X 23.47		
	135867	O-RING – 1.78 X 15.60		
21	135778	FITTING – ADAPTER	3	
	50219	O-RING – 1.98 X 11.89		
	135865	O-RING – 1.78 X 9.25		
22	135821	FITTING – ELBOW 90° HYD	3	
	30971	O-RING – 2.95 X 23.47		
	135868	O-RING – 1.78 X 18.77		
23	136220	FITTING – ELBOW 90° HYD	1	
	44209	O-RING – 2.21 X 16.36		
	135866	O-RING – 1.78 X 12.42		
24	252208	FITTING – 90° 16-16 CODE61-ORFS	1	
	112868	O-RING – 3.53 X 32.92		
	135554	O-RING – 1.78 X 23.52		

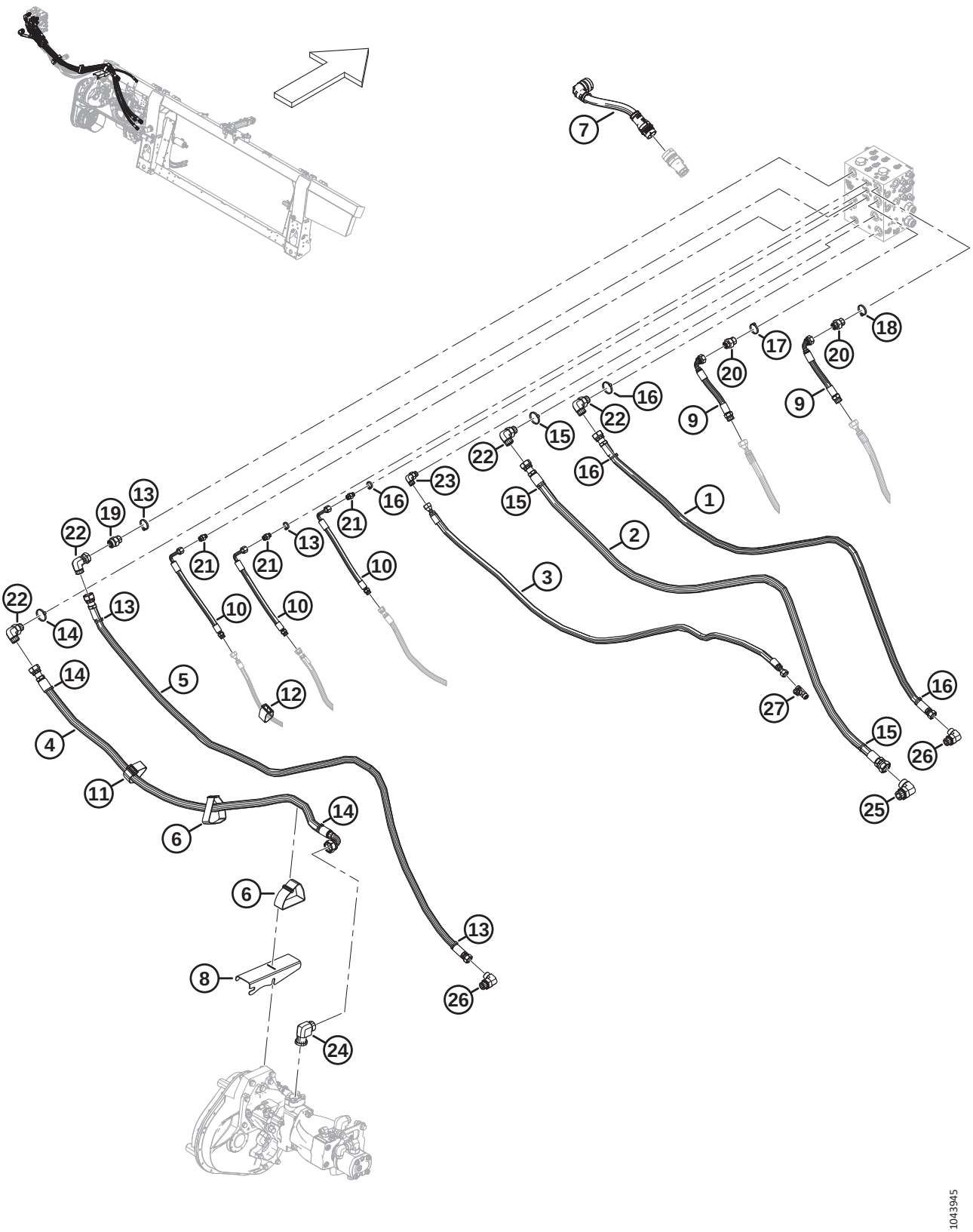
1
2
3
4
5
6
7
8
9
10
11
12
13
14
15
16
17
18
19
20
21
22
23
24
25
26
27
1043945

Ref	Part Number	Description	Qty	Serial Number
25	135734	FITTING – ELBOW 90° HYD	1	
	50220	O-RING – 2.95 X 29.74		
	135554	O-RING – 1.78 X 23.52		
26	136347	FITTING – ELBOW 90° HYD	2	
	30971	O-RING – 2.95 X 23.47		
	135867	O-RING – 1.78 X 15.60		
27	136684	FITTING – TEE HYD		
	44209	O-RING – 2.21 X 16.36		
	135866	O-RING – 1.78 X 12.42		

187 Electrical – Base (Integrated Hydraulic System)

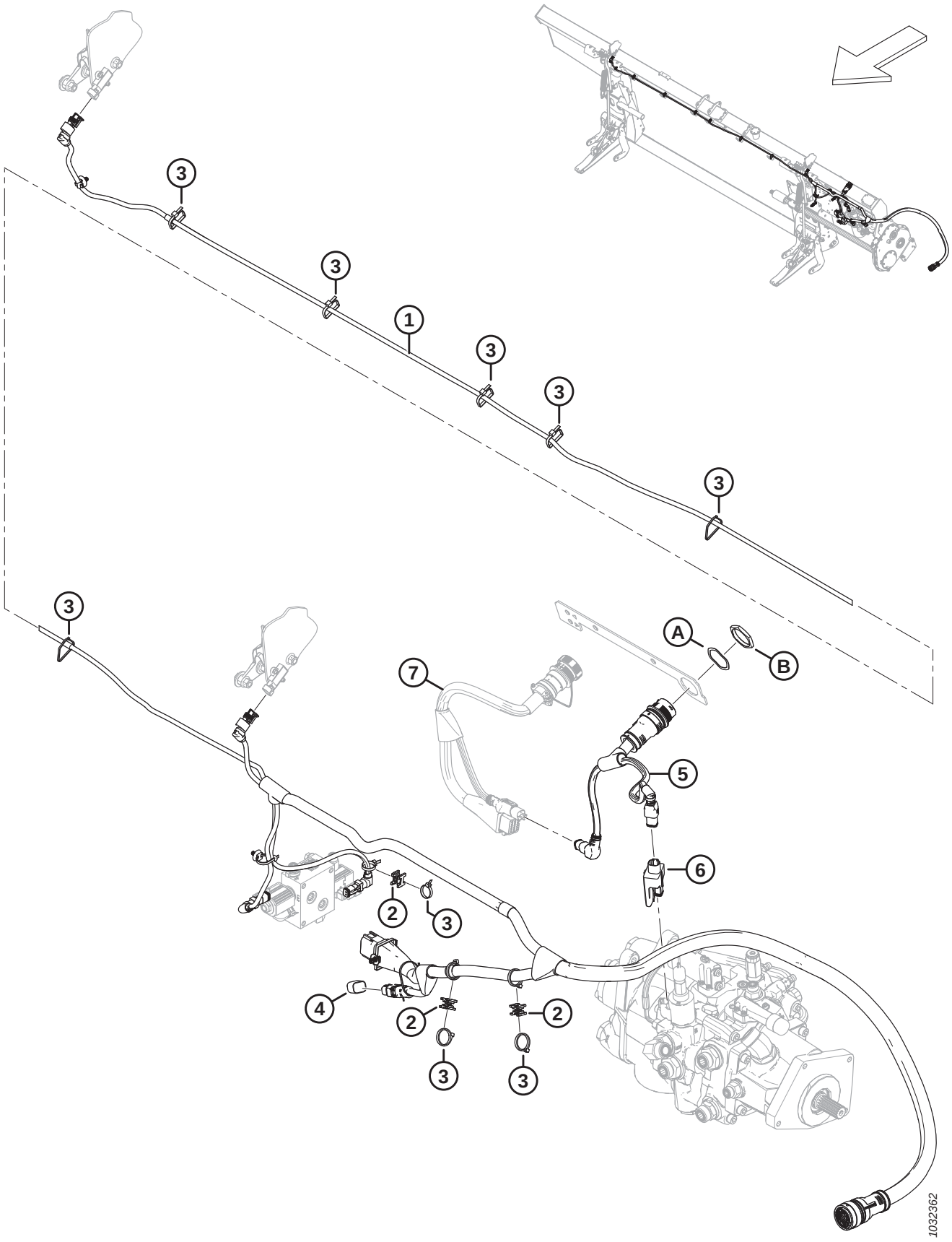

Ref	Part Number	Description	Qty	Serial Number
	B7489	KIT – AUTO HEADER HEIGHT PLUG [746]		
	B7490	KIT – PASS-THRU TILT PLUG [747]		
1	328089	HARNESS – MAIN [748]	1	
	136655	FASTENER – FIR TREE MT W/ TIE		
2	134442	SPACER – DUAL SWIVEL SADDLE	3	
3	21763	FASTENER – CABLE TIE, BLACK	A/R	
4	328318	PLUG – FLOAT CONFIG. 2 SENSOR (LATERAL TILT) [749]	OPT	
	328560	PLUG – FLOAT CONFIG. 1 SENSOR (AUTO HEADER HEIGHT) [749]	OPT	
	323698	PLUG – TILT, PASS-THRU [749]	OPT	
5	322383	HARNESS – FM200 ADAPTER	1	
6	328411	MODULE – VALVE DRIVER	1	
7	REF	HARNESS – COMPLETION PACKAGE [750]		
A	134730	WASHER – LOCK, HDP 20, SIZE 24		
B	134728	NUT – PANEL, HDP 20, SIZE 24		

746. The kit includes auto header height plug (MD #328560) and instructions. Kits are available through Whole Goods only.
747. The kit includes pass-thru tilt plug (MD #323698) and instructions. Kits are available through Whole Goods only.
748. The harness comes complete with all fir tree fasteners (MD #136655) attached.
749. The float plug varies depending on the combine model and the electrical completion package required. To identify the correct float plug, refer to the electrical completion section for your specific combine.
750. The harness varies depending on the combine model and the electrical completion package required. For harness part numbers, refer to the electrical completion section for your specific combine.

188 Electrical – Base (Modular Hydraulic System)

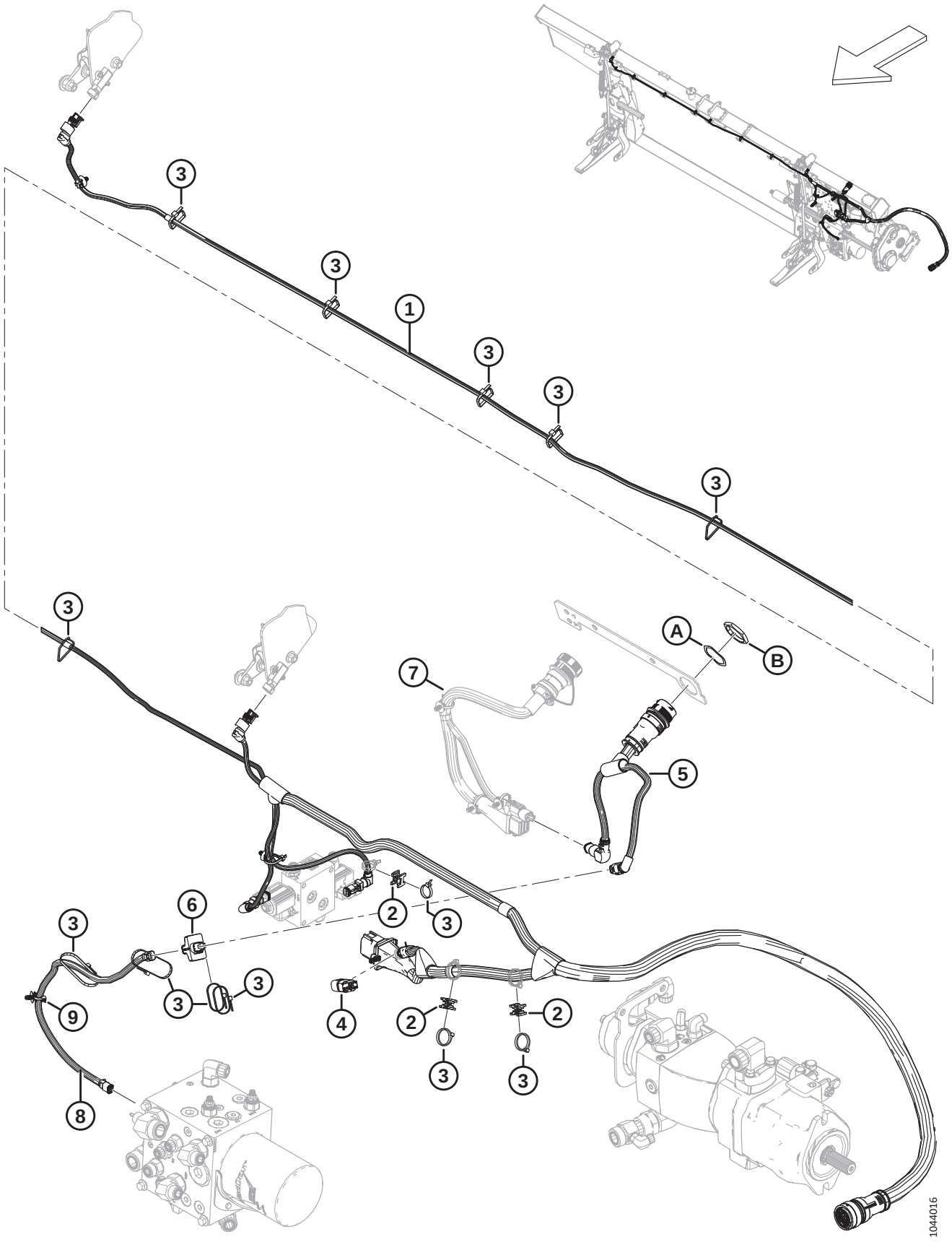

Ref	Part Number	Description	Qty	Serial Number
	B7489	KIT – AUTO HEADER HEIGHT PLUG [751]		
	B7490	KIT – PASS-THRU TILT PLUG [752]		
1	328089	HARNESS – MAIN [753]	1	
	136655	FASTENER – FIR TREE MT W/ TIE		
2	134442	SPACER – DUAL SWIVEL SADDLE	3	
3	21763	FASTENER – CABLE TIE, BLACK	A/R	
4	328318	PLUG – FLOAT CONFIG. 2 SENSOR (LATERAL TILT) [754]	OPT	
	328560	PLUG – FLOAT CONFIG. 1 SENSOR (AUTO HEADER HEIGHT) [754]	OPT	
	323698	PLUG – TILT, PASS-THRU [754]	OPT	
5	322383	HARNESS – FM200 ADAPTER	1	
6	304371	MODULE – VALVE DRIVER WITH SW	1	
7	REF	HARNESS – COMPLETION PACKAGE [755]		
8	378435	HARNESS – EXT. DRAPER CNTRL	1	
9	136655	FASTENER – FIR TREE MT W/ TIE		
A	134730	WASHER – LOCK, HDP 20, SIZE 24		
B	134728	NUT – PANEL, HDP 20, SIZE 24		

751. The kit includes auto header height plug (MD #328560) and instructions. Kits are available through Whole Goods only.
752. The kit includes pass-thru tilt plug (MD #323698) and instructions. Kits are available through Whole Goods only.
753. The harness comes complete with all fir tree fasteners (MD #136655) attached.
754. The float plug varies depending on the combine model and the electrical completion package required. To identify the correct float plug, refer to the electrical completion section for your specific combine.
755. The harness varies depending on the combine model and the electrical completion package required. For harness part numbers, refer to the electrical completion section for your specific combine.

189 Electrical – FM200 to Combine Cab

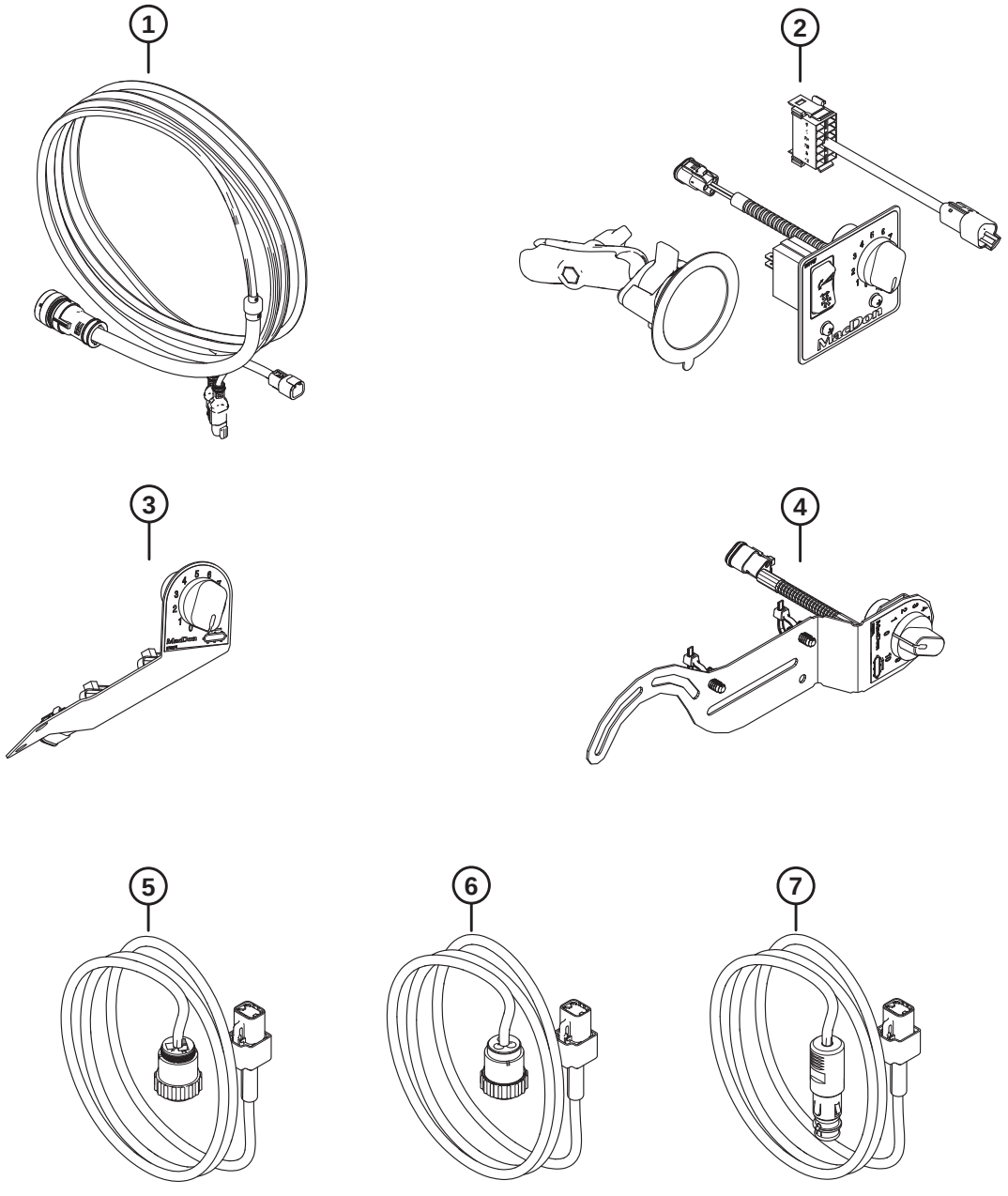

1041869

Ref	Part Number	Description	Qty	Serial Number
	B7048	KIT – FM2 TILT AND SD CONTROL, GENERIC [756]		
	B7431	KIT – CONTROL, SIDE DRAPER SPEED, CNH (2019 AND LATER) [757]		
	B7506	KIT – CNH PRE-MY19 IN-CAB CONTROLS [758]		
	B7052	KIT – CAB POWER HARNESS, BOSCH/AUX [759]		
1	328549	KIT – CAB CONTROL [760]		
2	328550	KIT – TILT AND SIDE DRAPER CONTROL (GENERIC) [761]		
	314076	HARNESS – EXT. CAB ROCKER SW		
	287859	BASE – SUCTION CUP WITH ARM		
	NSS	CONTROL PANEL – ICSDSC, GENERIC [762]		
	213459	POTENTIOMETER – 5K [763]		
	109773	KNOB – PLASTIC [763]		
3	NSS	KIT – SIDE DRAPER CONTROL, CNH (2023 AND PRIOR) [764]		
	NSS	CONTROL PANEL, ICSDSC, CNH (2023 AND PRIOR) [765]		
	213459	POTENTIOMETER – 5K [763]		
	109773	KNOB – PLASTIC [763]		
	21763	FASTENER – CABLE TIE, BLACK		

756. The Generic FM2 Tilt and Side Draper Control kit (B7048) includes the Tilt and Side Draper Control kit (MD #328550). Kits are available through Whole Goods only.
757. The CNH Side Draper Speed Control kit for model year 2019 and later (B7431) includes the Side Draper Speed Control kit (MD #357945). Kits are available through Whole Goods only.
758. The CNH Pre-MY19 In-Cab Controls kit (B7506) is used for all model year 2018 and prior CNH combines and includes the CNH bag assembly (MD #284900). Kits are available through Whole Goods only.
759. The Bosch/Aux Cab Power Harness kit (B7052) includes the Bosch/Aux Cab Power kit (MD #328555). Kits are available through Whole Goods only.
760. The kit includes combine cab control harness (NSS) and instructions.
761. The kit includes rocker switch harness (MD #314076), suction cup base (MD #287859), generic control panel (NSS), and instructions.
762. The generic control panel (NSS) includes generic panel (MD #287944), rocker switch (MD #287797), ball mount base (MD #287749), two screws (MD #136313), and two nuts (MD #320390).
763. The potentiometer and plastic knob are service parts for the control panel.
764. CNH Side Draper Control kit (MD #328551) has been superseded by control kit (MD #357945). To service the superseded kit, order Side Draper Speed Control kit (MD #357945).
765. CNH ICSDSC control panel (MD #276671) has been superseded by kit (MD #357945). To service the superseded control panel, order Side Draper Speed Control kit (MD #357945).

ELECTRICAL – FM200 TO COMBINE CAB

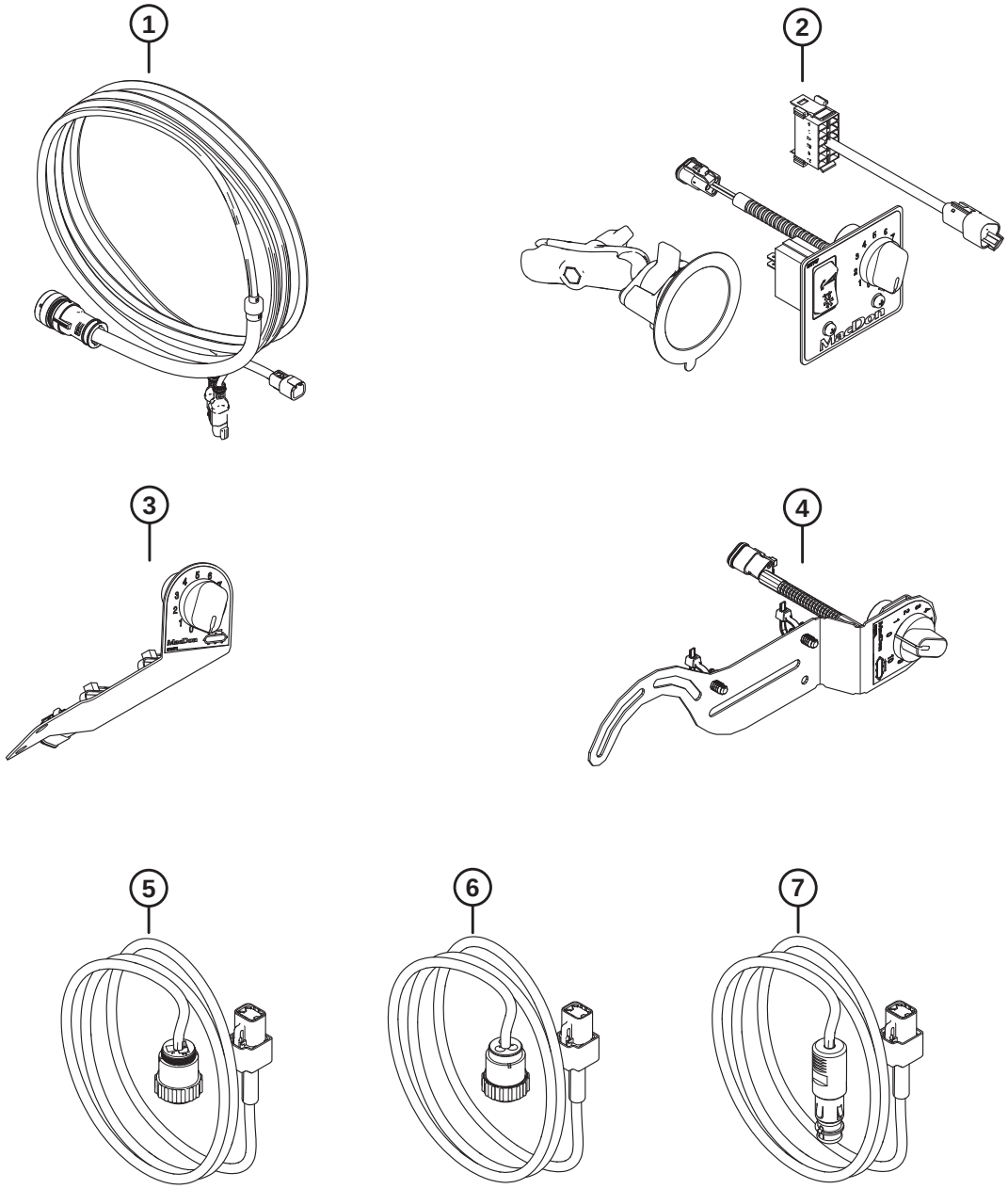

1041869

Ref	Part Number	Description	Qty	Serial Number
4	357945	KIT – SIDE DRAPER SPEED CONTROL (CNH) (2019 AND LATER) [766]		
	NSS	CONTROL – SDSC PANEL		
	213459	POTENTIOMETER – 5K [763]		
	109773	KNOB – PLASTIC [763]		
	136655	FASTENER – FIR TREE MT W/ TIE		
	184705	WASHER – FLAT M6-200HV-AA1J		
5	NSS	KIT – CAB POWER CPC NA (CNH) [767]		
	NSS	HARNESS – EXT. CAB PWR CPC [768]		
6	NSS	KIT – CAB PWR CPC EU [769]		
	NSS	HARNESS – EXT. CAB PWR CPC EU [770]		
7	328555	KIT – CAB POWER BOSCH/AUX [771]		
	NSS	HARNESS – EXT. CAB PWR BOSCH/AUX		
	NSS	BAG ASSY – CBN CONTROL CNH NA [772]		
	NSS	BAG ASSY – CBN CONTROL CNH EU [773]		
	284900	BAG ASSY – IN-CAB CONTROL CNH [774]		
	NSS	KIT – IN-CAB ADAPTER AND MODULE [775]		

766. The kit includes SDSC control panel (NSS), two fasteners (MD #136655), two washers (MD #184705), and instructions.
767. North American CNH CPC Cab Power kit (MD #328552) has been superseded by kit (MD #328555). To service the superseded cab power kit, order Bosch/Aux Cab Power kit (MD #328555).
768. CPC cab power harness (MD #308684) has been superseded by kit (MD #328555). To service the superseded power harness, order Bosch/Aux Cab Power kit (MD #328555).
769. European CNH CPC Cab Power kit (MD #335287) has been superseded by kit (MD #328555). To service the superseded cab power kit, order Bosch/Aux Cab Power kit (328555).
770. CPC cab power harness (MD #328561) has been superseded by kit (MD #328555). To service the superseded power harness, order Bosch/Aux Cab Power kit (MD #328555).
771. The kit includes Bosch/Aux cab power harness (NSS) and instructions.
772. The North American CNH bag assembly (MD #337617) has been superseded by CNH bag assembly (MD #284900). To service the superseded bag assembly, order CNH bag assembly (MD #284900).
773. The European CNH bag assembly (MD #337618) has been superseded by CNH bag assembly (MD #284900). To service the superseded bag assembly, order CNH bag assembly (MD #284900).
774. The bag assembly includes Cab Control kit (MD #328549), Side Draper Speed Control kit (MD #357945), Bosch/Aux Cab Power kit (MD #328555), cable ties (MD #21763, MD #30753), cable tie mounts (MD #305330), and In-Cab Adapter and Module kit (NSS).
775. The In-Cab Adapter and Module kit (NSS) used for all model year 2018 and prior CNH combines and include cab adapter harness (MD #322383), valve driver module (MD #328411), lock washer (MD #134730), and panel nut (MD #134728). Refer to Section *187 Electrical – Base (Integrated Hydraulic System), page 515* for component locations.

190 Decals and Reflectors – FM200

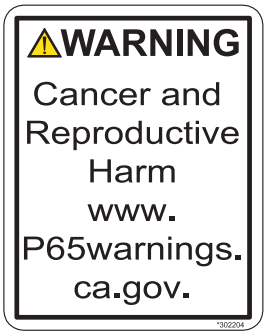

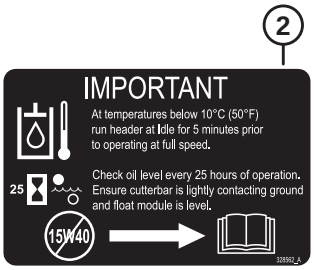

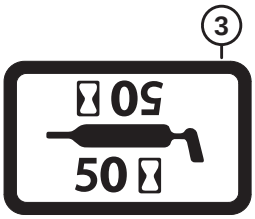

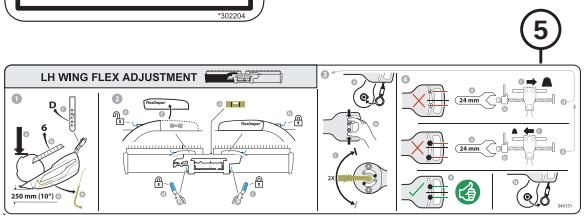

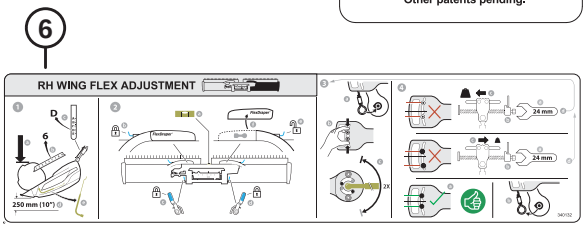

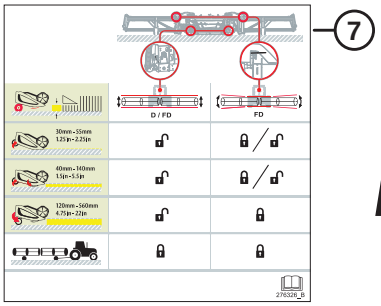

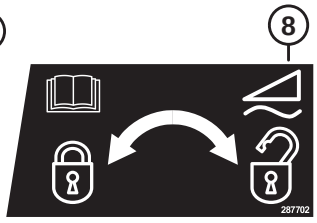

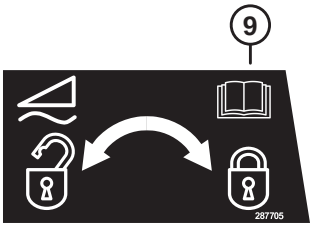

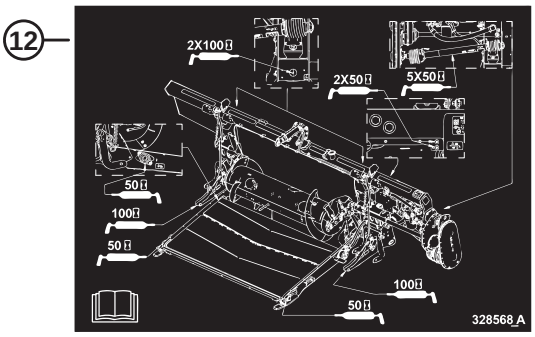

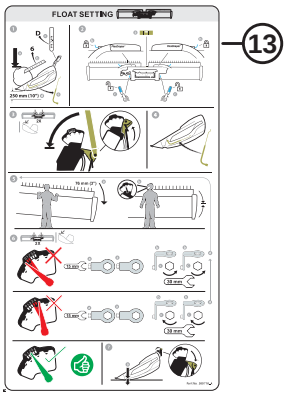

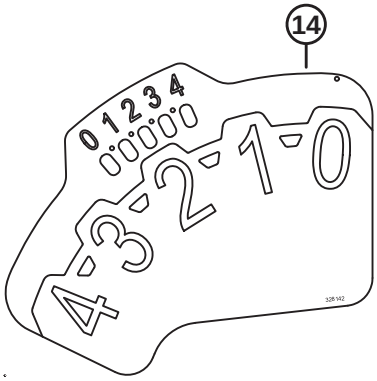

1039342

Ref	Part Number	Description	Qty	Serial Number
1	302204	DECAL – CA PROPOSITION 65		
2	328562	DECAL – OIL, IMPORTANT		
3	23165	DECAL – 50 HR LUBE		
	23163	DECAL – 10 HR LUBE		
4	32070	DECAL – PATENT NUMBER		
5	340131	DECAL – LH FLEX SETTING		
6	340132	DECAL – RH FLEX SETTING		
7	276326	DECAL – HEADER ADJUSTMENT		
8	287702	DECAL – FLOAT LOCK, LH		
9	287705	DECAL – FLOAT LOCK, RH		
10	328565	DECAL – OIL DRAIN		
11	313728	DECAL – READ MANUAL/FLUID SPRAY		
12	347342	DECAL – GREASE FM200		
13	360716	DECAL – FLOAT SETTING [776]		
	368631	DECAL – FLOAT SETTING [777]		
14	328142	DECAL – FSM		
15	360655	DECAL – SAFETY RETURN WRENCH		
16	174131	STRIP – ANTI SLIP, 250 MM LG		
	132117	STRIP – ANTI SLIP, 450 MM LG		
	140225	STRIP – ANTI SLIP, 550 MM LG		
17	115146	REFLECTOR – AMBER		

776. For model year 2023 and prior.
777. For model year 2024 and later.

191 New Holland CR/CX – Float Module Completion

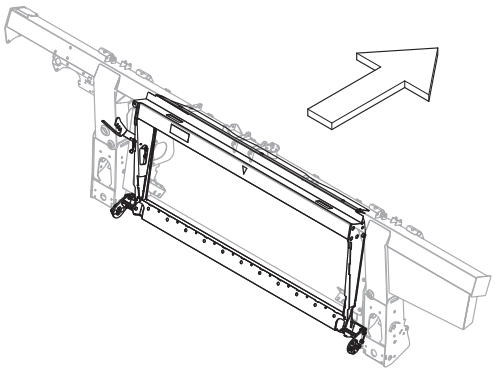

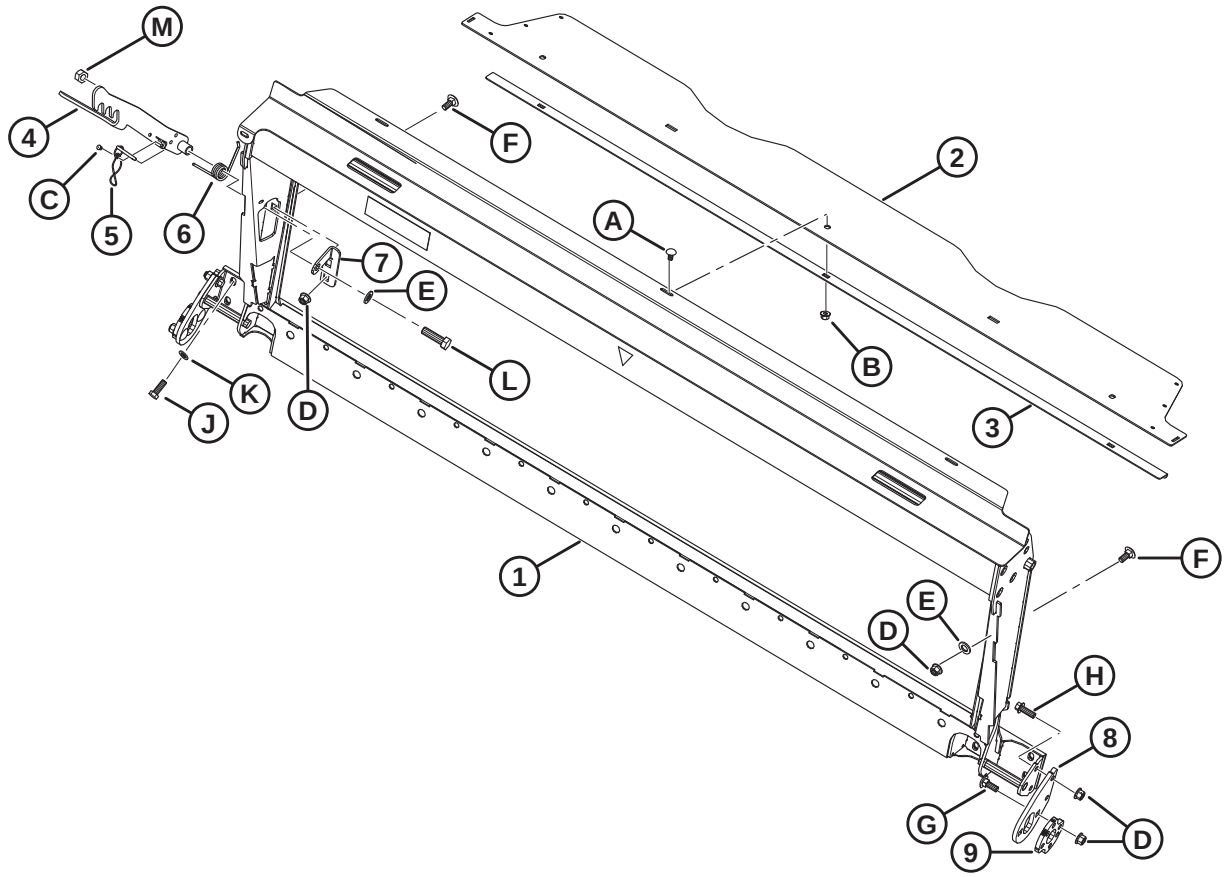

1044022

Ref	Part Number	Description	Qty	Serial Number
	B7476	**KIT – CNH TRANSITION FRAME** [778]		
1	**357567**	**ASSY – CNH TRANSITION W/ DECAL**	**1**	
2	357195	COVER – FEED AUGER TOP	1	
3	301629	RETAINER – DUST COVER	1	
4	347141	LATCH – WELDT	1	
5	237363	PIN – DETENT WITH 8 IN. LANYARD	1	
6	156948	SPRING – TORSION	1	
7	**357606**	**SUPPORT – BOLT MOUNT**	**1**	
8	**284976**	**SUPPORT – ANCHOR MOUNT**	**2**	
9	**284971**	**PLATE – ADJUSTMENT**	**2**	
A	184657	BOLT – RHSSN M10 X 1.5 X 20-8.8-AA1J		
B	135799	NUT – HEX FLG CTR LOC M10 X 1.5-10		
C	**113799**	**RIVET – POP**		
D	136431	NUT – HEX FLG CTR LOC M12 X 1.75-10		
E	**184717**	**WASHER – FLAT REG M16-200HV-AA1J**		
F	**184667**	**BOLT – RHSN M12 X 1.75 X 30-8.8-ZINC**		
G	**136291**	**BOLT – RHSN TFL M12 X 1.75 X 35-8.8-ZINC**		
H	**152731**	**BOLT – HEX FLG HD TFL M12 X 1.75 X 35-10.9-ZINC**		
J	**152730**	**BOLT – HEX HD TFL M12 X 1.75 X 35-10.9-AA1J**		
K	184714	WASHER – FLAT REG M12-300HV		
L	**136717**	**BOLT – HEX HD M16 X 2 X 55-10.9**		
M	**320208**	**NUT – HEX CTR LOCK M16 X 2-12-ZINC**		

778. Kits are available through Whole Goods only.

192 New Holland CR/CX – Hydraulic/Electrical Completion

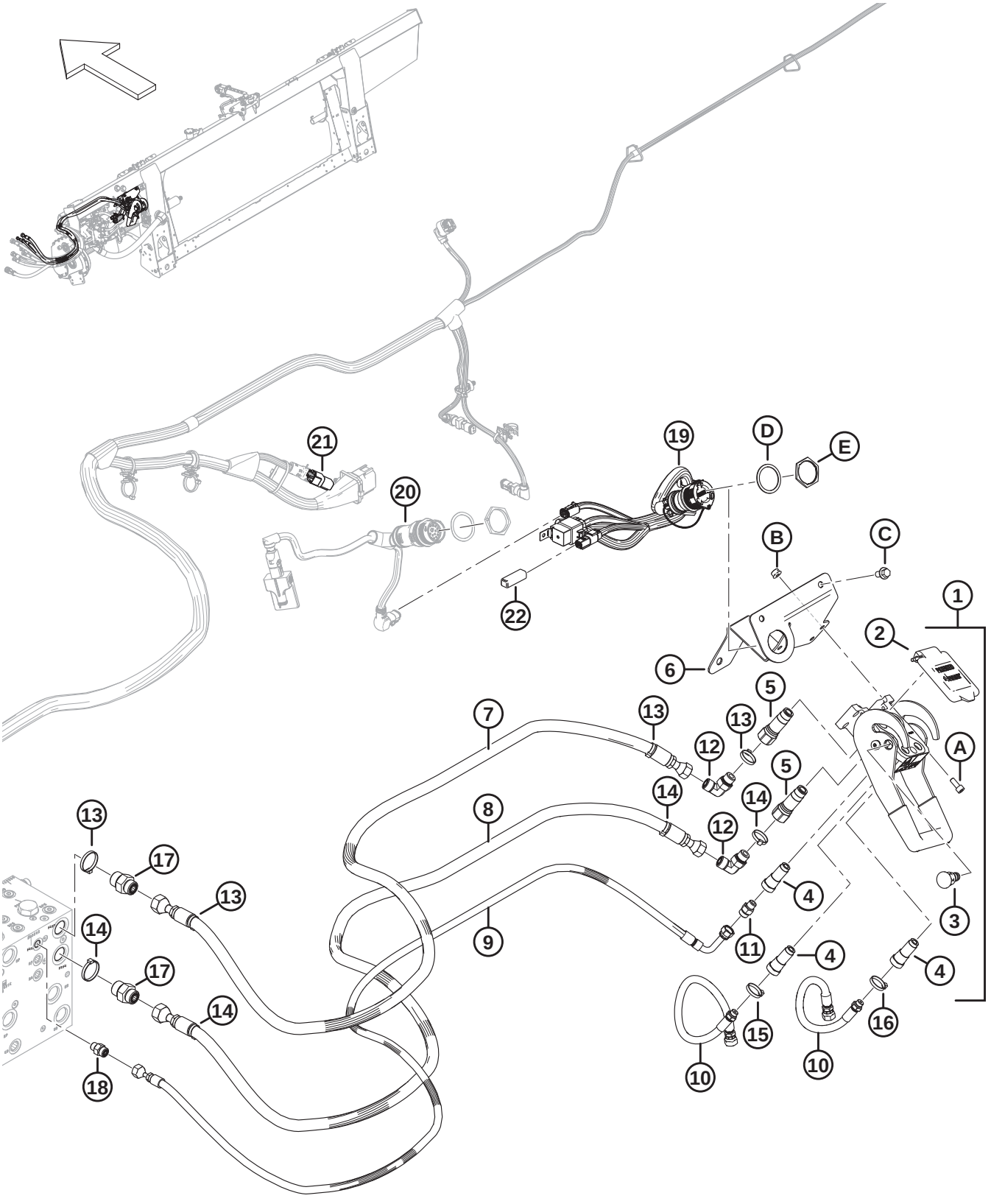

Ref	Part Number	Description	Qty	Serial Number
	B7507	KIT – CNH HYD ELEC COMPLETION [779]		
1	153151	COUPLING – MULTI [780]	1	
2	129800	KIT – COVER CNH MULTI-COUPLER	1	
3	129801	KIT – LATCH BUTTON	1	
4	129976	COUPLING 1/4 IN.	3	
5	129977	COUPLING 3/8 IN.	2	
6	328874	SUPPORT WELDT – CNH MULTI COUPLER	1	
7	314586	HOSE – HYD, REEL DRIVE PRESSURE CNH	1	
8	314587	HOSE – HYD, REEL DRIVE RETURN CNH	1	
9	314588	HOSE – HYD, REEL LIFT, CNH	1	
10	314585	HOSE – HYD, REEL F-A, CNH	2	
11	252694	FITTING – ADAPTER .052 ORIFICE	1	
12	136220	FITTING – ELBOW 90° HYD	2	
	44209	O-RING – Ø2.21 X Ø16.36		
	135866	O-RING – Ø1.78 X Ø12.42		
13	49232	FASTENER – CABLE TIE, WHITE	4	
14	40701	FASTENER – CABLE TIE, YELLOW	4	
15	40702	FASTENER – CABLE TIE, RED	2	
16	49227	FASTENER – CABLE TIE, GREEN	2	
17	135786	FITTING – ADAPTER	2	
	50219	O-RING – Ø1.98 X Ø11.89		
	135865	O-RING – Ø1.78 X Ø9.25		
18	135778	FITTING – ADAPTER	1	
	50219	O-RING – Ø1.98 X Ø11.89		
	135865	O-RING – Ø1.78 X Ø9.25		
19	**284946**	**KIT – CNH ELEC COMP, INTEGRATED** [781]	**1**	
20	REF	HARNESS – CAB ADAPTER [782]	1	
	REF	MODULE – VALVE DRIVER [782]	1	
	REF	WASHER – LOCK, HDP 20, SIZE 24 [782]	1	
	REF	NUT – PANEL, HDP 20, SIZE 24 [782]	1	

779. Kits are available through Whole Goods only.
780. The multicoupler includes CNH multi-coupler cover kit (MD #MD #129800), latch button kit (MD #129801), three 1/4 inch couplings (MD #129976), and two 3/8 inch coupling (MD #129977).
781. The kit includes integration completion harness (NSS), transistor plug (MD #349362), and hardware (MD #134010, MD #134011).
782. For the harness, valve driver module, and hardware, refer to Section *187 Electrical – Base (Integrated Hydraulic System), page 515* or Section *188 Electrical – Base (Modular Hydraulic System), page 517*; required for model year 2018 and prior machines only.

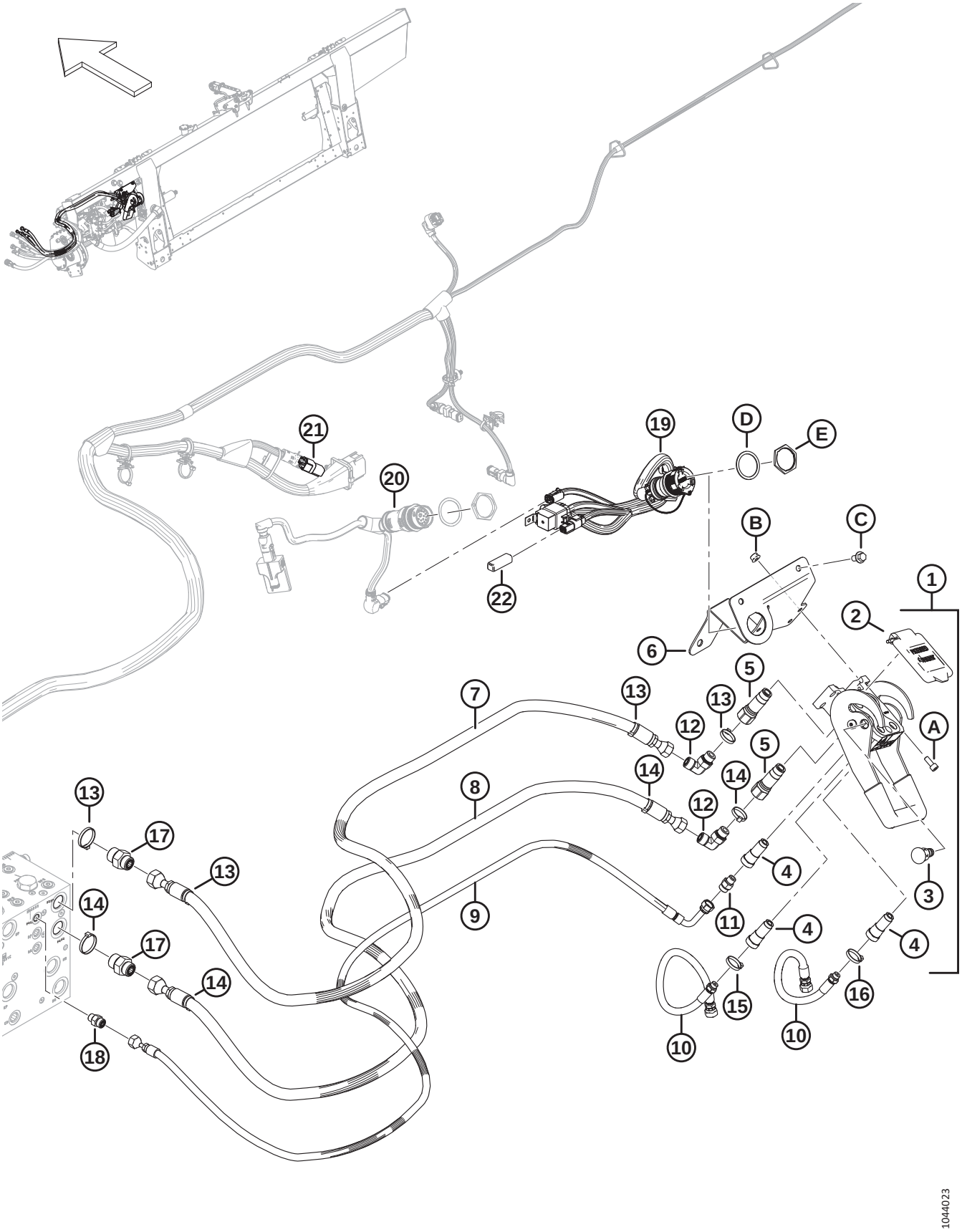
1
2
3
4
5
6
7
8
9
10
11
12
13
14
15
16
17
18
19
20
21
22
A
B
C
D
E
1044023

Ref	Part Number	Description	Qty	Serial Number
21	REF	PLUG – TILT, PASS THRU [783]	1	
22	**349362**	**PLUG – SW PWR TRANSISTOR**	**1**	
A	167307	SCREW – HEX SOC HD M8 X 1.25 X 20-8.8-AA1J		
B	135337	NUT – HEX FLG CTR LK M8 X 1.25-8-AA1J		
C	136151	BOLT – HEX FLG HD TFL M10 X 1.5 X 16-8.8-AA1J		
D	134011	WASHER – LOCK SPRING, DEUTSCH HD, SIZE 24		
E	134010	NUT – PANEL, HD 30, SIZE 24		

783. The pass-thru tilt plug (MD #323698) connects to the float module's main harness at P600. The float plug comes preinstalled for model year 2024 and later machines configured for New Holland CR Wide combines, but it is NOT included in the completion package (B7507). To order the pass-thru tilt plug complete with installation instructions, refer to Section *187 Electrical – Base (Integrated Hydraulic System), page 515* or Section *188 Electrical – Base (Modular Hydraulic System), page 517*.

193 New Holland CR/CX – Auger Completion

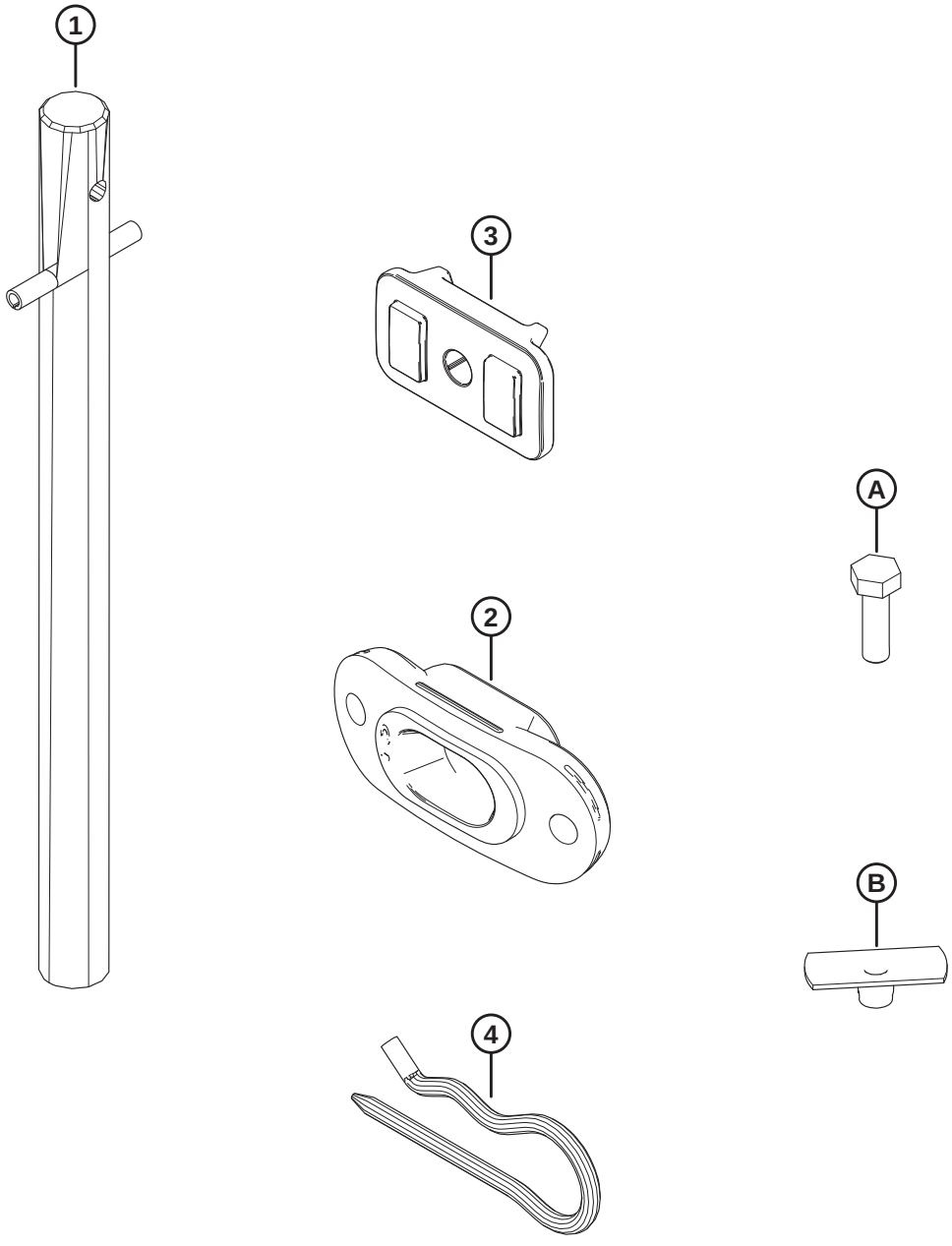

1032789

Ref	Part Number	Description	Qty	Serial Number
1	337152	KIT – FINGER	8	
	7642	PIN – SPRING 3/16 DIA X 1.5 LG	8	
2	337143	GUIDE	8	
3	213084	PLUG – FLIGHTING SLOT	8	
4	123180	PIN – HAIR	8	
A	252703	BOLT – HEX HD TFL M6 X 1 X 20 X SPCL-12.9-AF0C		
B	197263	NUT – TEE M6 X 1		

194 New Holland CR/CX – Flighting Completion

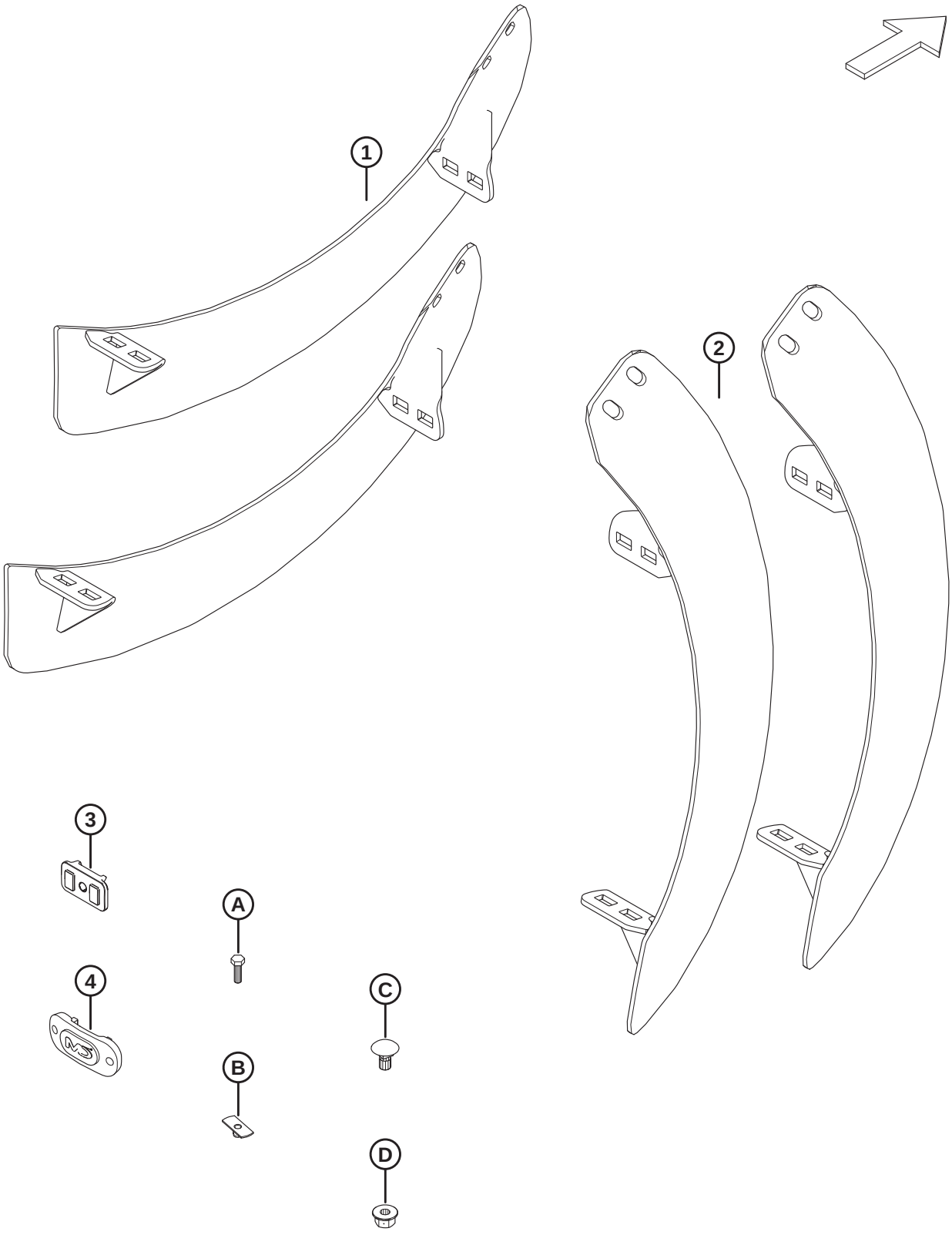

Ref	Part Number	Description	Qty	Serial Number
1	287889	FLIGHTING – LH HIWEAR	2	
2	287890	FLIGHTING – RH HIWEAR	2	
3	213084	PLUG – FLIGHTING SLOT	2	
4	187137	PLUG	4	
A	252703	BOLT – HEX HD TFL M6 X 1 X 20 X SPCL-12.9-AF0C		
B	197263	NUT – TEE M6 X 1		
C	136178	BOLT – RHSN M10 X 1.5 X 20-8.8-AA1J		
D	135799	NUT – HEX FLG CTR LOC M10 X 1.5-10		

195 New Holland CR/CX – Deflector Completion

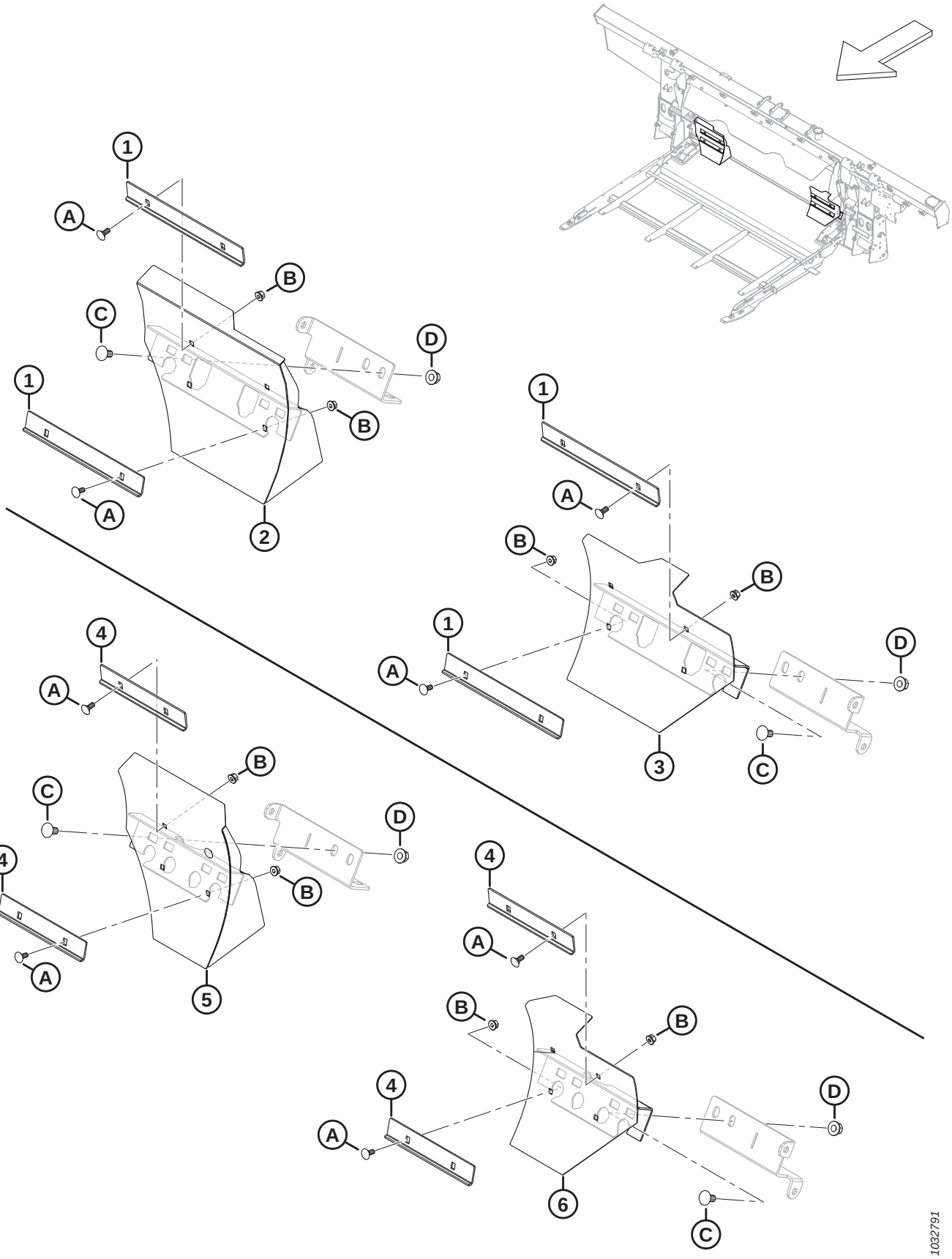

Ref	Part Number	Description	Qty	Serial Number
	B7347	KIT – DEFLECTORS, NARROW FEED AUGER [784]		
	B7348	KIT – DEFLECTORS, MEDIUM FEED AUGER [785]		
1	328085	ANGLE – LONG STRIPPER [786]	4	
2	337779	DEFLECTOR – LONG RH WELDT [786]	1	
3	337780	DEFLECTOR – LONG LH WELDT [786]	1	
4	314680	ANGLE – SHORT STRIPPER [787]	4	
5	337777	DEFLECTOR – SHORT RH WELDT [787]	1	
6	337778	DEFLECTOR – SHORT LH WELDT [787]	1	
A	197171	BOLT – RHSN M8 X 1.25 X 20-8.8-ZINC		
B	135337	NUT – HEX FLG CTR LK M8 X 1.25-8-AA1J		
C	152439	BOLT – RHSSN M12 X 1.75 X 25-8.8-AA1J		
D	136431	NUT – HEX FLG CTR LOC M12 X 1.75-10		

784. For feeder opening widths of approximately 1115 mm (44 in.). Kits are available through Whole Goods only.
785. For feeder opening widths of approximately 1317 mm (52 in.). Kits are available through Whole Goods only.
786. Included in B7347.
787. Included in B7348.

196 New Holland 10 Volt Auto Header Height Control Adapter Kit

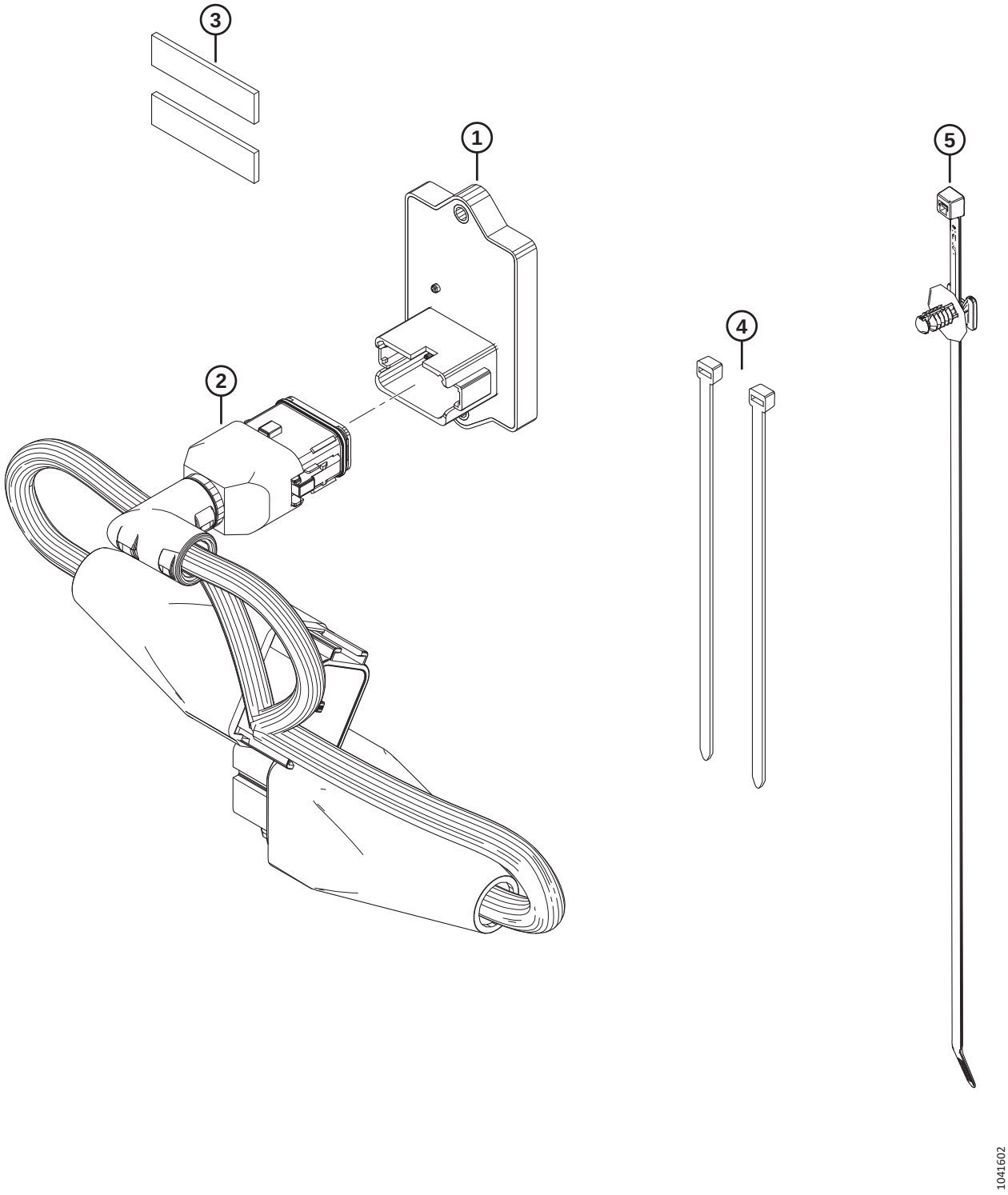

NEW HOLLAND 10 VOLT AUTO HEADER HEIGHT CONTROL ADAPTER KIT

Ref	Part Number	Description	Qty	Serial Number
	B7241	KIT – NH 10V ADAPTER [788]		
1	500448	MODULE – NH 10V	1	
2	335160	HARNESS – NH 10V ADAPTER	1	
3	NSS	TAPE – FOAM, VHB, 1/2 IN. WIDE, 50 MM	2	
4	21763	FASTENER – CABLE TIE, BLACK	2	
5	136655	FASTENER – FIR TREE MT W/ TIE	1	

788. Kits are available through Whole Goods only.

197 (Option) Auger Flighting Kits

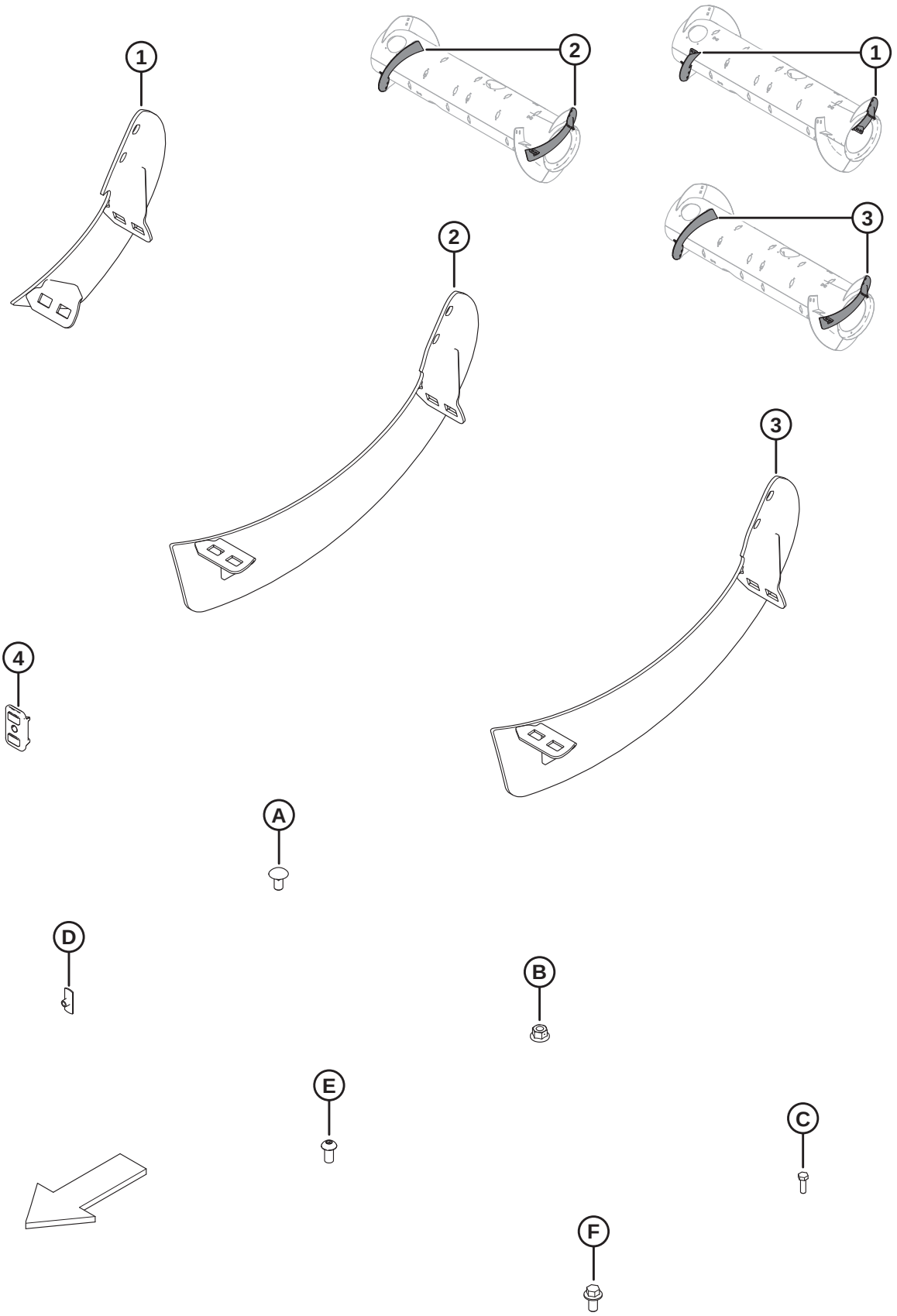

(OPTION) AUGER FLIGHTING KITS

NOTE:

Long flighting kits (B6400 and MD #287032) are used to convert the auger to the optional Ultra Narrow configuration. Refer to your header operator's manual for more information.

Ref	Part Number	Description	Qty	Serial Number
	B6400	KIT – FM100 RTD, WEAR RESISTANT FLIGHT [789]		
	287031	KIT – FM100 RTD, MED FLIGHT [790]		
	287032	KIT – FM100 RTD, LONG FLIGHT [791]		
1	NSS	FLIGHTING, RTD – RH, MED [792]	1	
	NSS	FLIGHTING, RTD – LH, MED [793]	1	
	287887	FLIGHTING, RTD – RH, MED (HIWEAR)	1	
	287888	FLIGHTING, RTD – LH, MED (HIWEAR)	1	
2	NSS	FLIGHTING, RTD – RH, LONG [794]	1	
	NSS	FLIGHTING, RTD – LH, LONG [795]	1	
3	287890	FLIGHTING, RTD – RH, LONG (HIWEAR)	1	
	287889	FLIGHTING, RTD – LH, LONG (HIWEAR)	1	
4	213084	PLUG – FLIGHTING SLOT	2	
A	136178	BOLT – RHSN M10 X 1.5 X 20-8.8-A3L		
B	135799	NUT – HEX FLG CTR LOC M10 X 1.5-10-A3L		
C	252703	BOLT – HEX HD TFL M6 X 1 X 20 X SPCL-12.9-AA2L		
D	197263	NUT – TEE M6 X 1		
E	135723	SCREW – HEX SOC BTN HD M10 X 1.5 X 20-10.9-A3L		
F	152655	BOLT – HEX FLG HD M10 X 1.5 X 20-8.8-A3L		

789. The kit includes Long Flighting kit (MD #287032). Kits are available through Whole Goods only.
790. The kit includes wear-resistant medium flighting, two plugs (MD #213084), hardware, and instructions.
791. The kit includes wear-resistant long flighting, two plugs (MD #213084), hardware, and instructions.
792. Service with medium right flighting (MD #287887).
793. Service with medium left flighting (MD #287888).
794. Service with long right flighting (MD #287890).
795. Service with long left flighting (MD #287889).

198 (Option) FM200 Full Interface Filler – FD2 Series

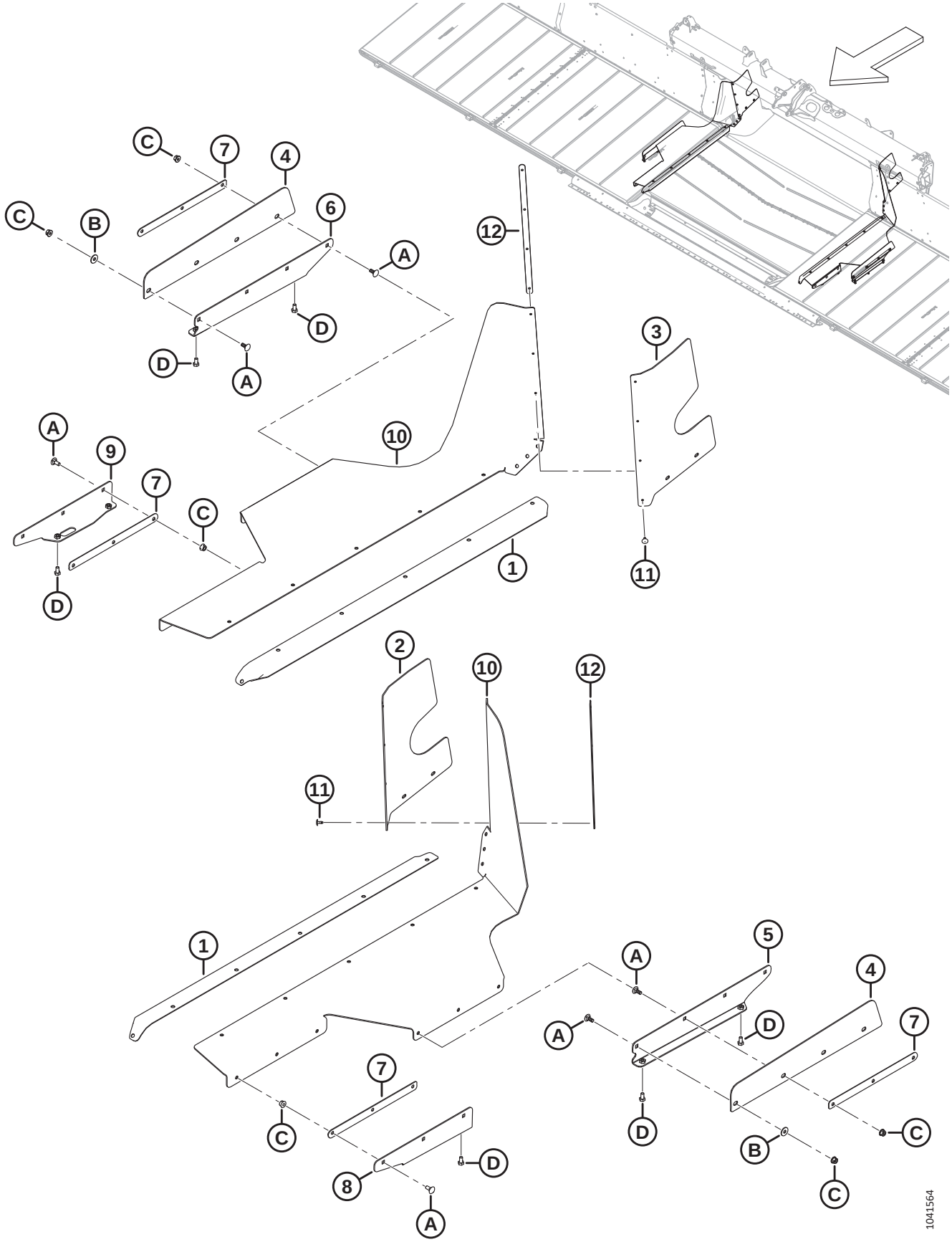

(OPTION) FM200 FULL INTERFACE FILLER – FD2 SERIES

Ref	Part Number	Description	Qty	Serial Number
	B7217	KIT – FULL INTERFACE FILLER FD2 [796]		
1	322750	SEAL – DRAPER FEED DECK	2	
2	328348	FILLER – LH REAR UPPER	1	
3	328349	FILLER – RH REAR UPPER	1	
4	344409	FILLER – LEG SIDE [797]	2	
	344336	KIT – SERVICE ONLY FULL FILLER [798]	A/R	
5	344412	SUPPORT – SIDE FILLER LH WELDT [799]	1	
	344336	KIT – SERVICE ONLY FULL FILLER [798]	A/R	
6	344413	SUPPORT – SIDE FILLER RH WELDT [800]	1	
	344336	KIT – SERVICE ONLY FULL FILLER [798]	A/R	
7	301065	PLATE – FILLER RETAINER	4	
8	301049	SUPPT – SIDE FILLER LH WELDT	1	
9	301047	SUPPT – SIDE FILLER RH WELDT	1	
10	301034	FLAP – FULL FILLER FLEX	2	
11	293053	RIVET – POP	8	
12	276770	PLATE – FILLER RETAINER	2	
A	197171	BOLT – RHSN M8 X 1.25 X 20-8.8-ZINC		
B	184709	WASHER – FLAT LARGE M8-200HV		
C	135337	NUT – HEX FLG CTR LK M8 X 1.25-8-AA1J		
D	50139	BOLT – HEX HD TFL M8 X 1.25 X 16-8.8-AA1J		

796. European Market only. Provides additional sealing between float module and header. Kits are available through Whole Goods only.
797. Was previously MD #314671 in superseded bundle B7217. To service the superseded part, order service kit MD #344336.
798. The Full Filler Service kit is used to service superseded filler parts (MD #301067, 301069, 314419, 314420, and 314671).
799. Was previously MD #314419 and MD #301069 in superseded bundle B7217. To service the superseded parts, order service kit MD #344336.
800. Was previously MD #314420 and MD #301067 in superseded bundle B7217. To service the superseded parts, order service kit MD #344336.

199 (Option) FM200 Fillers and Links

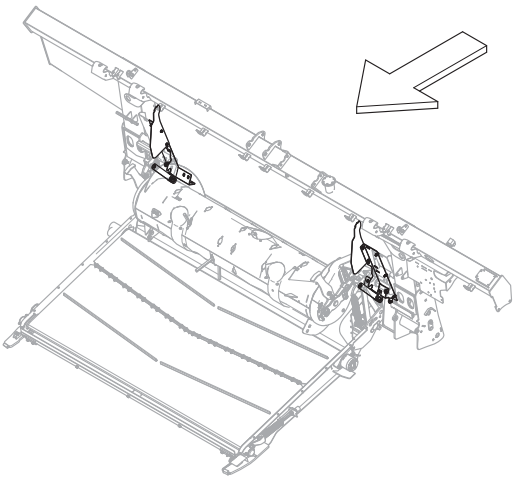

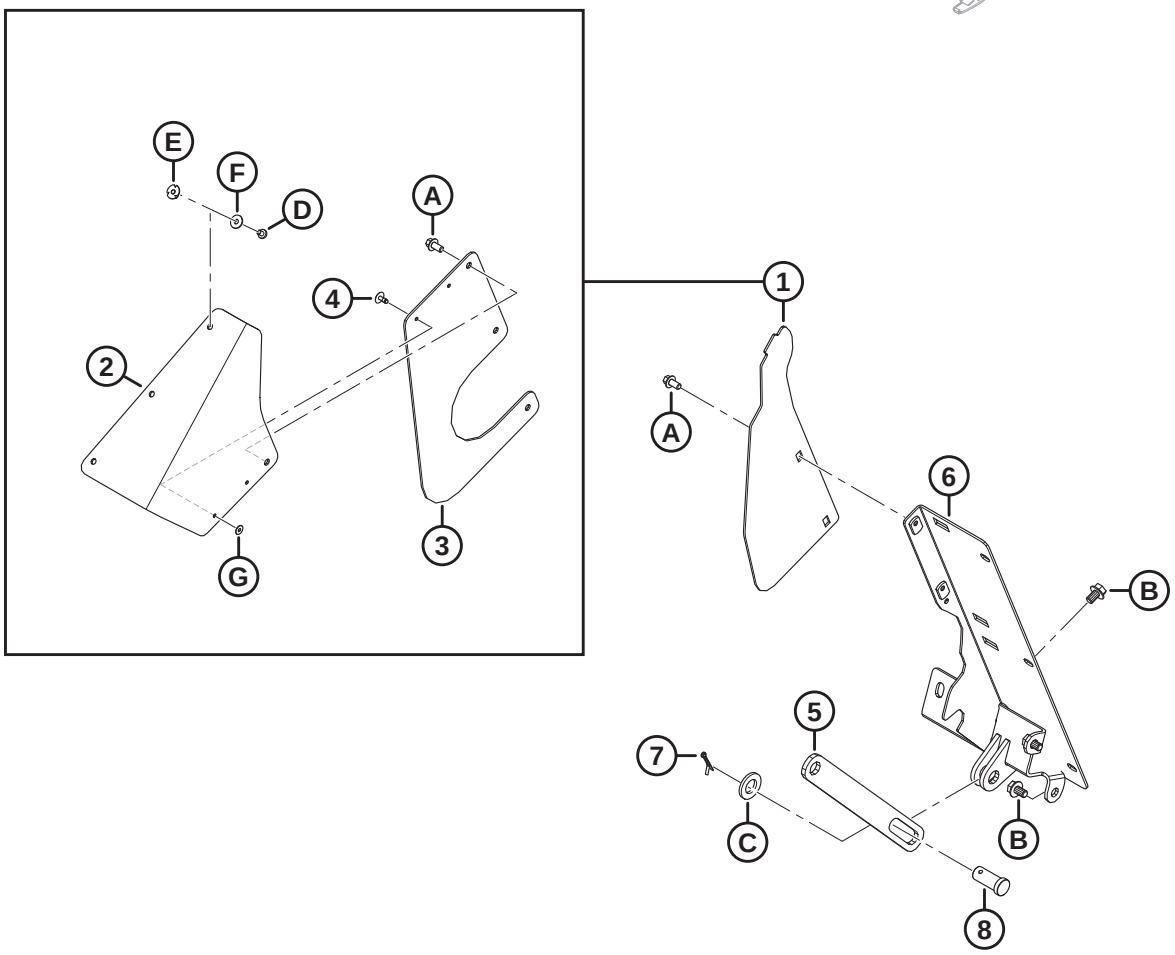

1039547

(OPTION) FM200 FILLERS AND LINKS

Ref	Part Number	Description	Qty	Serial Number
	B7342	KIT – FM200 ADAPTER FILLERS AND LINKS [801]		
1	357512	KIT – DUST COVER SIDES [802]	A/R	
2	357174	FLAP – DUST COVER FILLER	2	
3	357173	COVER – FEED AUGER SIDE	2	
4	293053	RIVET – POP	4	
5	322914	BAR – AUGER SUPPORT LIMITER	1	
6	NSS	FILLER – WELDMENT LH	1	
	NSS	FILLER – WELDMENT RH	1	
7	18648	PIN – COTTER 3/16 DIA X 1.25 ZP	2	
8	11814	PIN – CLEVIS, 23.8 MM, 30 MM ZN PL	2	
A	136485	BOLT – HEX FLG HD TFL M8 X 1.25 X 16-8.8-AA1J		
B	136151	BOLT – HEX FLG HD TFL M10 X 1.5 X 16-8.8-AA1J		
C	112130	WASHER – HARD ASTM F4363/4 IN. NOM. ID AB0C		
D	252291	SCREW – PAN HD M6 X 1 X 8-8.8-AA1J		
E	252051	NUT – TEE M6		
F	184706	WASHER – FLAT LARGE M6-200HV		
G	293054	WASHER – FLAT LARGE M5-200HV-AA1J [803]		

801. The FM200 Adapter Fillers and Links kit is used to convert John Deere X9 Series-configured FM200 Float Modules for use with other combine brands and models. Kits are available through Whole Goods only.
802. This kit is used to service units with superseded side covers (MD #347558). The kit includes two dust cover filler flaps (MD #357174), two feed auger side covers (MD #357173), four pop rivets (MD #293053), and hardware.
803. Washer (MD #293054) is not included in the kit; order this washer separately.

200 (Option) Hillside Extension

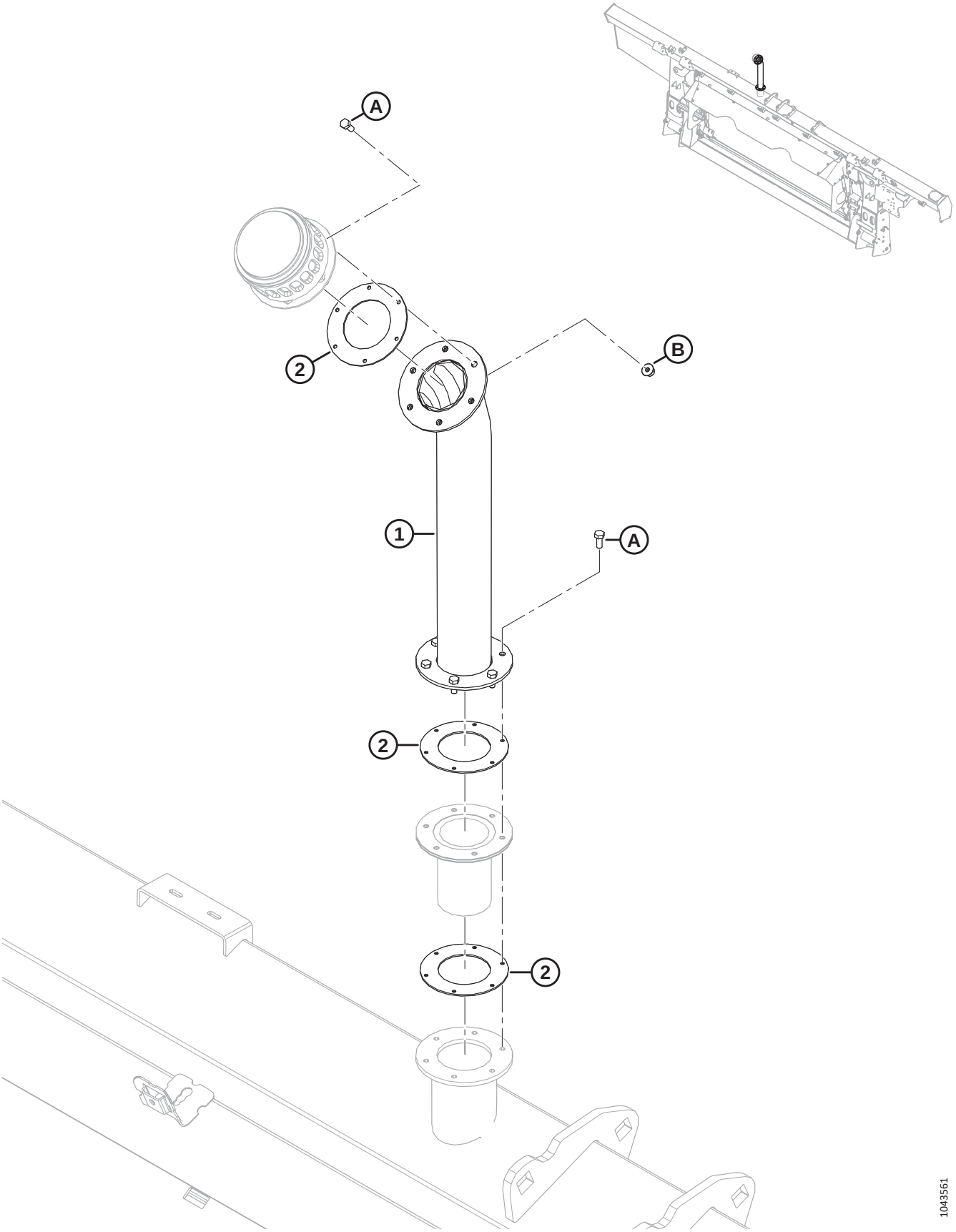

(OPTION) HILLSIDE EXTENSION

Ref	Part Number	Description	Qty	Serial Number
	B7542	KIT – HYDRAULIC RESERVOIR FILL EXTENSION [804]		
	284975	KIT – HYDRAULIC RESERVOIR FILL EXTENSION [805]		
1	NSS	HYD RESERVOIR FILL EXTENSION	1	
2	312706	KIT – OIL FILL GASKETS [806]	A/R	
	166450	DECAL – WARNING, HOT SURFACE	2	
A	320397	SCREW – HEX HD TFL M5 X 0.8 X 12-8.8-PLAIN (2022 AND LATER) [807]		421190–
	135873	SCREW – MACH #10-32 X 0.5 IN. HEX (2021 AND PRIOR) [807]		–421189
B	136635	NUT – HEX FLG CTR LOC M5 X 0.8-8-AA1J		

804. The kit includes hydraulic reservoir fill extension (NSS), 3 gaskets (NSS), 2 decals (MD #166450), 12 metric screws (MD #320397), 6 metric nuts (MD #136635), and instructions. For model year 2021 and prior machines with imperial threaded holes, order imperial screws (MD #135873) separately. Kits are available through Whole Goods only.
805. The kit includes hydraulic reservoir fill extension (NSS), 3 gaskets (NSS), 2 decals (MD #166450),12 metric screws (MD #320397), 6 metric nuts (MD #136635), and instructions. For model year 2021 and prior machines with imperial threaded holes, order imperial screws (MD #135873) separately.
806. The Oil Fill Gaskets kit includes two gaskets (NSS).
807. On model year 2021 and prior units, use imperial screw (MD #135873) to prevent cross threading a metric bolt into an imperial threaded hole.

201 (Option) Stripper Bars

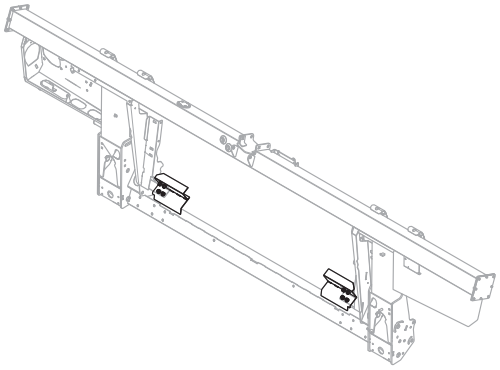

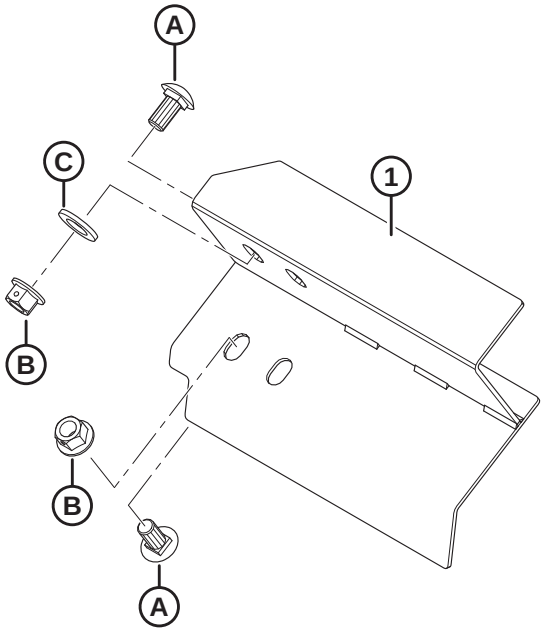

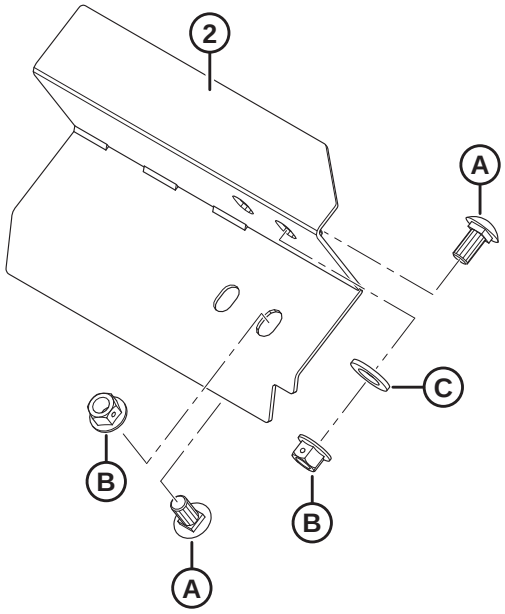

1023852

(OPTION) STRIPPER BARS

Ref	Part Number	Description	Qty	Serial Number
	B6042	KIT – STRIPPER BARS, 265 MM LG (WITHOUT CUTOUT) [808]		
	B6044	KIT – STRIPPER BARS, 325 MM LG [808]		
	B6045	KIT – STRIPPER BARS, 365 MM LG [808]		
	B6046	KIT – STRIPPER BARS, 403 MM LG [808]		
	B6213	KIT – STRIPPER BARS, 515 MM LG [808]		
1	213523	STRIPPER – WELDMENT, LEFT (265 MM LG W/O CUTOUT)	1	
	213573	STRIPPER – WELDMENT, LEFT (325 MM LG)	1	
	213567	STRIPPER – WELDMENT, LEFT (365 MM LG)	1	
	213561	STRIPPER – WELDMENT, LEFT (403 MM LG)	1	
	213579	STRIPPER – WELDMENT, LEFT (515 MM LG)	1	
2	213525	STRIPPER – WELDMENT, RIGHT (265 MM LG W/O CUTOUT)	1	
	213574	STRIPPER – WELDMENT, RIGHT (325 MM LG)	1	
	213568	STRIPPER – WELDMENT, RIGHT (365 MM LG)	1	
	213562	STRIPPER – WELDMENT, RIGHT (403 MM LG)	1	
	213580	STRIPPER – WELDMENT, RIGHT (515 MM LG)	1	
A	135903	BOLT – RHSN M12 X 1.75 X 25-8.8-A3L		
B	136431	NUT – HEX FLG CTR LOC M12 X 1.75-10-A3L		
C	184717	WASHER – FLAT REG M16-200HV-AA1J		

808. Kits are available through Whole Goods only.

Index

795 442
1709 462
4761 96
4762 ..... 288, 294
5512 426
6647 426
7642 ..... 260, 436, 532
9213 442
9333 442
11695 96
11814 ..... 446, 544
13125 ..... 4, 8, 56, 58, 60, 318
13617 476
16235 120
16266 12
16681 ..... 110, 112, 114, 116, 118
17006 408
18598 444
18600 ..... 288, 294
18601 ..... 168, 172, 246, 248, 446, 458
18603 ..... 96, 486
18604 50
18605 ..... 50, 120
18606 ..... 96, 384, 390
18607 ..... 2, 110, 112, 114, 116, 118, 120, 122, 128, 130, 308, 426
18608 ..... 286, 306, 312, 358, 458, 462
18609 ..... 306, 360, 456, 484
18619 318
18621 ..... 100, 102, 104, 110, 112, 116, 118
18624 ..... 368, 376
18626 ..... 106, 108
18629 ..... 106, 108
18637 ..... 24, 26, 28
18638 ..... 438, 444
18648 ..... 100, 102, 104, 106, 108, 290, 308, 320, 358, 446, 544
18669 ..... 294, 296
18671 ..... 48, 120, 292, 306, 318, 358, 454
18704 ..... 2, 110, 112, 116, 118
18768 ..... 384, 390
18798 ..... 310, 404
18867 ..... 24, 26, 28
18898 ..... 464, 468
18916 ..... 310, 360
19542 320
19958 ..... 114, 120
20312 456
21010 476
21032 306
21061 408
21194 96
21235 ..... 438, 442
21301 ..... 122, 126, 130, 132
21363 ..... 406, 414
21383 328
21540 ..... 2, 292, 462
21572 370
21763 ..... 162, 190, 198, 212, 256, 258, 296, 306, 384, 390, 408, 420, 484, 488, 492, 516, 518, 520, 538
21859 ..... 384, 388
22072 52
23163 524
23164 268
23165 ..... 268, 400, 524
26429 320
30144 ..... 100, 102, 104
30191 418
30228 362
30316 ..... 428, 430
30368 328
30441 ..... 30, 32
30463 462
30505 ..... 30, 32, 444, 446
30515 328
30520 ..... 120, 306, 358
30627 ..... 52, 386, 392, 432, 458
30628 ..... 260, 414, 418, 480
30629 ..... 100, 102, 104
30630 ..... 124, 128, 130, 132, 414
30631 ..... 52, 400
30632 ..... 386, 392, 424
30636 460
30655 ..... 52, 124, 128
30660 ..... 188, 192, 196, 202, 206, 208, 214, 218, 400
30661 ..... 384, 388
30693 486
30701 426
30702 426
30715 ..... 52, 310, 314, 326, 466, 470
30716 ..... 372, 380
30753 ..... 188, 194, 200, 206, 208, 214, 218, 420, 454, 488, 492
30856 52
30934 ..... 384, 390
30971 ..... 162, 164, 168, 170, 174, 178, 182, 186, 222, 224, 228, 404, 408, 416, 492, 498, 504, 506, 510, 512, 514
31465 444
31774 ..... 2, 124, 128, 130, 458
32070 ..... 268, 524
36651 ..... 428, 430
39272 312
40095 428

40701.....162, 214, 218, 228, 234, 236, 242, 506, 512, 528
40702.....162, 190, 198, 212, 408, 486, 504, 506, 510, 512, 528
40703.....162, 212, 214, 234, 236, 242, 408, 484, 504, 506, 510, 512
40704.....162, 190, 198, 212, 408, 484, 504, 506, 510, 512
42592.....30
43219.....264
44209.....162, 164, 168, 170, 246, 248, 404, 416, 490, 492, 496, 504, 506, 510, 512, 514, 528
44210.....166, 170, 174, 178, 182, 186, 224, 228, 382, 388, 408, 416, 492, 496, 498, 504, 508
45427.....486
47225.....294, 296
49227.....162, 200, 206, 218, 484, 504, 506, 510, 512, 528
49232.....162, 228, 506, 512, 528
49306.....382, 388
49378.....320, 356
49904.....456
50071.....260
50083.....438
50139.....286, 464, 468, 542
50140.....400
50154.....440
50155.....2, 40, 42, 44, 128, 132, 440, 444
50186.....328
50193.....12, 160, 284, 356
50219.....162, 164, 182, 186, 232, 236, 242, 484, 498, 506, 512, 528
50220.....164, 408, 416, 490, 494, 496, 498, 504, 508, 510, 514
50222.....416, 494
50223.....166, 170, 382, 388, 416, 492, 494, 498
52129.....2
100500.....48, 70, 76, 80, 86, 90, 94, 456
100577.....164
100709.....98
100710.....98
100712.....98
100714.....98
100715.....98
100717.....98
100718.....98
100719.....98
100720.....98
100721.....98
100722.....98
100723.....98
100726.....98
100862.....476
101007.....308, 358
101095.....368, 376
101897.....24, 26, 28
102264.....8, 56, 58, 60, 318, 368, 376, 484
102629.....98
102630.....98
102711.....164
103361.....286
103575.....164
103879.....114, 120
108172.....362, 364, 386, 390
109773.....520, 522
111521.....122, 126
111528.....464, 468
111545.....490, 496
112130.....38, 446, 544
112823.....224, 228
112866.....416
112868.....416, 510, 512
113152.....98
113153.....98
113222.....48, 70, 76, 80, 86, 90, 94, 456
113229.....96
113561.....314
113566.....312
113799.....526
113813.....286
113937.....70, 76, 80, 86, 90, 94
115146.....270, 524
115670.....70, 76, 80, 86, 90, 94
115759.....268
118011.....476
118239.....314
119529.....372, 380
119558.....372, 374, 376
119560.....372
119565.....372
119593.....368, 376
119623.....368
119641.....368
119653.....372, 374
119654.....372, 374, 376
119655.....372
119656.....372
119666.....368
119667.....368
119672.....368, 376
119691.....368, 376
119692.....374, 376
119693.....374, 376
119694.....374
119696.....368, 376
119697.....368, 376
119705.....368
119706.....368
119725.....368, 376
119726.....372, 380

119737 380
119738 ..... 368, 376
119745 376
119757 ..... 368, 376
119766 372
120845 ..... 30, 32
120901 96
123180 ..... 436, 450, 532
123318 410
123406 444
123978 484
125377 ..... 198, 212, 214
129313 268
129800 528
129801 528
129976 528
129977 528
130283 474
132117 524
132531 30
132607 ..... 30, 32
133047 458
133136 486
133372 476
133631 428
133632 430
133634 428
133641 434
133877 436
133942 404
133992 ..... 306, 358
134010 530
134011 530
134437 410
134442 ..... 256, 258, 384, 390, 420, 516, 518
134728 ..... 256, 258, 516, 518
134730 ..... 256, 258, 516, 518
135156 ..... 310, 360, 440, 444
135157 444
135226 214
135234 484
135235 394
135248 370
135266 ..... 162, 200, 206
135290 442
135319 320
135335 ..... 160, 406
135336 20
135337 ..... 4, 8, 10, 20, 24, 26, 28, 30, 34, 36, 38, 50, 54, 56, 58, 60, 120, 154, 158, 176, 180, 184, 186, 224, 228, 264, 266, 286, 294, 296, 314, 320, 326, 386, 392, 400, 452, 478, 480, 530, 536, 542
135369 ..... 308, 440, 444
135377 264
135400 ..... 490, 496
135401 ..... 286, 424
135443 ..... 188, 200, 206, 214, 224, 228, 232, 236, 242
135444 ..... 190, 198, 212, 506, 512
135523 320
135554 ..... 408, 416, 490, 494, 496, 498, 510, 512, 514
135587 498
135626 474
135630 ..... 350, 354, 474
135696 ..... 20, 320
135716 306
135723 ..... 450, 540
135734 ..... 490, 496, 498, 510, 514
135778 ..... 162, 182, 186, 188, 190, 194, 198, 200, 204, 208, 212, 214, 216, 232, 236, 242, 284, 290, 484, 506, 512, 528
135780 ..... 162, 168, 170, 246, 248, 504, 510
135783 ..... 286, 370, 378, 406, 414, 426
135785 ..... 18, 24, 26, 28, 30, 224, 228, 234, 238, 242, 286, 370, 378, 384, 390, 400, 446, 472, 482
135786 ..... 162, 416, 492, 506, 512, 528
135788 ..... 162, 168, 170, 174, 178, 182, 186, 222, 224, 228, 408, 504, 506, 510, 512
135789 ..... 408, 504, 508
135799 ..... 4, 8, 14, 18, 24, 26, 28, 30, 46, 50, 100, 102, 104, 106, 108, 140, 142, 144, 152, 154, 156, 158, 160, 168, 170, 176, 180, 226, 230, 234, 238, 242, 260, 286, 292, 294, 296, 302, 308, 320, 332, 336, 370, 378, 384, 390, 396, 400, 428, 432, 434, 440, 446, 448, 450, 452, 458, 466, 470, 472, 478, 480, 500, 526, 534, 540
135800 ..... 362, 364
135821 ..... 408, 492, 498, 504, 506, 512
135865 ..... 162, 182, 186, 190, 198, 200, 204, 208, 214, 216, 232, 236, 240, 242, 290, 394, 416, 484, 492, 494, 498, 506, 512, 528
135866 ..... 162, 168, 170, 244, 246, 248, 408, 496, 498, 504, 506, 508, 510, 512, 514, 528
135867 ..... 162, 166, 170, 174, 178, 182, 186, 224, 228, 382, 388, 416, 492, 496, 498, 506, 510, 512, 514
135868 ..... 162, 168, 170, 174, 178, 182, 186, 220, 222, 224, 228, 408, 416, 492, 494, 498, 504, 506, 508, 510, 512
135873 ..... 404, 546
135888 506
135889 222
135894 ..... 18, 30, 34, 36, 38, 264, 266
135900 ..... 52, 384, 390, 440
135901 ..... 416, 494
135903 ..... 24, 26, 28, 32, 34, 36, 38, 110, 112, 114, 116, 118, 500, 548
135952 164
135957 ..... 166, 170, 382, 388, 416, 492, 498
135959 128
135995 ..... 456, 484
136005 ..... 62, 64, 66, 68, 348, 352

136024 416
136036 .....62, 64, 66, 68, 300, 342, 344, 346, 348, 352, 478
136050 480
136057 ..... 52, 60
136088 462
136089 ..... 416, 492, 496, 498
136095 .....188, 194, 198, 200, 204, 208, 212, 214, 216, 484, 498
136106 .....490, 496
136109 500
136113 .....386, 466, 470
136122 .....2, 6, 100, 102, 104, 106, 292
136124 2
136137 ..... 50, 420
136141 50
136143 ..... 2, 110, 112, 114, 116, 118, 120
136144 .....198, 214, 484
136145 .....188, 194, 208, 232, 236, 242
136146 .....190, 200, 204, 216, 232, 236, 242
136149 .....416, 492
136150 .....188, 194, 208
136151 ..... 8, 46, 56, 58, 60, 140, 142, 144, 250, 252, 254, 332, 336, 462, 486, 530, 544
136159 .....286, 294
136178 ..... 18, 294, 296, 302, 448, 450, 458, 534, 540
136209 ..... 124, 128, 130, 132
136211 .....56, 58, 60, 250, 252, 254
136220 .....506, 512, 528
136231 .....20, 466, 468
136240 .....198, 212, 214
136244 ..... 168, 170, 246, 248
136245 .....168, 170, 174, 178, 220, 224
136246 496
136248 478
136249 394
136269 .....164, 404
136291 ..... 124, 128, 356, 444, 526
136300 ..... 154, 158, 264, 266, 370
136302 400
136308 .....476, 488, 494
136310 .....106, 108
136312 300
136324 132
136325 .....232, 236, 242
136326 .....232, 236, 242
136327 .....224, 228
136337 .....416, 494
136339 .....12, 320, 372, 400
136342 .....12, 320, 372, 400
136347 ..... 416, 492, 498, 510, 514
136355 .....168, 172, 176, 180, 222, 226
136378 .....356, 446
136395 .....152, 154, 158, 332, 336, 396
136399 .....160, 420
136401 .....124, 128
136431 ..... 4, 20, 24, 26, 28, 30, 32, 34, 36, 38, 52, 96, 110, 112, 114, 116, 118, 124, 128, 130, 132, 138, 140, 142, 144, 152, 154, 308, 314, 320, 332, 336, 356, 360, 384, 390, 406, 414, 420, 440, 444, 452, 460, 478, 486, 488, 494, 500, 526, 536, 548
136440 .....100, 104, 106, 286, 308, 360, 370, 378, 420, 440, 444, 486
136441 440
136442 .....168, 172, 176, 180, 188, 192, 196, 198, 202, 206, 210, 212, 218
136443 128
136445 120
136446 ..... 124, 128, 130, 310
136447 .....416, 492, 498
136473 ..... 52, 420
136476 50
136477 292
136483 496
136485 .....120, 262, 264, 266, 320, 404, 464, 468, 544
136486 .....176, 180, 182, 186, 224, 228
136492 10
136495 ..... 52, 168, 170, 176, 180
136506 452
136512 .....2, 52
136513 .....2, 52
136524 164
136527 224
136540 .....188, 192, 196, 206, 208, 218, 234, 236, 242
136561 ..... 262, 264, 400, 500
136592 ..... 124, 128, 466, 470
136595 264
136596 458
136604 262
136613 262
136635 .....264, 546
136640 ..... 4, 20, 152, 154, 156, 332, 336
136653 394
136654 394
136655 ..... 258, 296, 454, 516, 518, 522, 538
136671 6
136684 .....496, 510, 514
136701 .....2, 100, 104, 106
136702 .....124, 128
136704 458
136717 526
136736 ..... 18, 444
136741 .....246, 248
136746 .....182, 186
136748 ..... 8, 266, 298
136749 .....14, 302, 368, 376
136755 486
136757 444
136759 ..... 30, 34, 36, 38, 124, 128, 320, 400, 436
136766 .....416, 494

136773 ..... 294, 296, 308, 314, 400
136779 ..... 176, 180, 182, 226
136824 ..... 34, 36, 38, 50, 264, 266
136842 ..... 124, 128
136846 ..... 416, 492
136848 2
136850 164
136857 308
136882 ..... 122, 128
136887 2
136900 410
137092 362
137118 362
137375 ..... 96, 122, 126, 384, 390
137476 ..... 122, 126, 130, 132
137519 362
137529 ..... 138, 332, 334
137721 ..... 122, 126, 132
137754 362
137825 ..... 126, 132
137980 ..... 136, 332, 334
139003 98
140225 524
140250 130
141220 312
142777 428
143107 96
144531 ..... 312, 358
144724 308
145249 ..... 30, 32
145840 ..... 24, 26, 28
148798 38
151691 442
151793 442
152009 356
152193 50
152274 406
152395 486
152439 ..... 36, 38, 110, 112, 116, 118, 452, 536
152520 ..... 52, 106, 108, 476
152602 ..... 96, 286
152655 ..... 4, 20, 46, 158, 320, 332, 336, 366, 406, 414, 450, 486, 500, 540
152668 ..... 8, 124, 128, 132, 160, 188, 196, 208, 234, 238, 242, 262, 266, 298, 314, 400, 458
152670 400
152702 ..... 310, 356
152730 ..... 30, 120, 124, 128, 130, 132, 444, 490, 526
152731 ..... 328, 406, 414, 420, 526
152732 ..... 30, 100, 102, 104, 106, 108, 320, 392, 396
152779 ..... 308, 320, 406
153151 528
156178 ..... 100, 102, 104
156501 456
156696 404
156741 456
156743 ..... 444, 458
156948 526
158174 ..... 164, 404, 490
159020 480
164061 ..... 122, 126, 130, 132
164213 ..... 122, 126, 130, 132
164214 ..... 122, 126, 130, 132
164215 120
164216 120
165168 160
165218 268
165524 ..... 16, 270, 308
165588 160
165735 ..... 30, 32
166450 546
167307 530
170851 ..... 190, 200, 206, 218
172259 32
172340 ..... 384, 388
172558 444
174131 524
174304 ..... 96, 384, 390
174418 50
174436 268
174849 ..... 134, 330, 334, 348, 352
174879 ..... 106, 108
181475 370
181649 442
183506 438
183508 ..... 438, 442
184303 ..... 182, 186, 188, 190, 194, 200, 204, 208, 214, 216
184461 ..... 166, 170, 174, 178, 182, 186, 382, 388, 492, 498
184463 ..... 408, 488, 492, 498, 504, 508
184584 ..... 362, 364
184587 424
184597 ..... 136, 332, 336
184642 ..... 266, 298
184643 314
184644 ..... 188, 196, 208, 234, 238, 242
184646 ..... 52, 308, 314
184648 480
184649 4
184652 ..... 326, 372, 380, 482
184656 ..... 192, 198, 212, 230, 294, 296, 320
184657 ..... 8, 464, 468, 500, 526
184659 458
184661 ..... 4, 14, 32, 386, 392, 400
184662 ..... 32, 160, 292, 294, 296, 428, 434, 440, 452, 458
184663 96
184664 ..... 286, 292, 328, 458
184665 ..... 4, 18, 320, 386, 392, 406, 414

INDEX

184667 ..... 4, 24, 26, 124, 128, 314, 370, 376, 526
184669 ..... 96, 128, 460, 464, 468
184672 314
184673 ..... 96, 320
184675 436
184677 ..... 52, 286
184679 314
184681 52
184683 ..... 56, 58, 60, 262
184685 ..... 52, 264
184688 ..... 56, 58, 60
184692 ..... 160, 168, 172, 176, 180, 188, 192, 196, 198, 202, 206, 210, 212, 218
184694 ..... 2, 40, 42, 44, 478
184695 320
184696 ..... 14, 96, 340, 400
184697 ..... 136, 328, 332, 336
184699 420
184701 262
184705 ..... 52, 56, 58, 60, 264, 522
184706 ..... 22, 298, 404, 544
184708 ..... 54, 60, 124, 128, 310, 400
184709 ..... 40, 52, 294, 296, 314, 320, 372, 380, 466, 468, 480, 542
184711 ..... 20, 30, 32, 52, 160, 264, 266, 406, 414, 418, 478, 480
184712 ..... 4, 386, 392, 458
184714 ..... 62, 64, 66, 68, 128, 132, 320, 406, 414, 486, 490, 496, 526
184717 ..... 106, 108, 110, 112, 116, 118, 292, 314, 370, 376, 420, 526, 548
184718 ..... 2, 18
184721 184
184977 50
187137 ..... 448, 450, 534
187252 418
187428 ..... 438, 442
187477 426
187518 444
187660 484
187967 418
188470 ..... 286, 292
190752 480
191353 ..... 122, 128
191489 ..... 8, 24, 26, 28, 34, 36, 38, 120, 386, 392
193187 312
193240 304
193241 304
193242 304
193243 304
194033 418
194082 404
194521 428
197122 444
197135 ..... 124, 128, 294, 296
197171 ..... 24, 26, 28, 400, 452, 478, 480, 536, 542
197229 264
197230 ..... 262, 266, 298
197263 ..... 436, 448, 450, 532, 534, 540
197275 30
197319 458
197320 ..... 310, 404
206340 264
209045 ..... 408, 498
210661 306
210690 304
210918 310
210985 ..... 306, 360
212250 456
213084 ..... 448, 450, 532, 534, 540
213110 442
213112 442
213363 484
213418 472
213419 472
213420 442
213459 ..... 520, 522
213523 548
213525 548
213546 438
213552 438
213554 438
213561 548
213562 548
213567 548
213568 548
213573 548
213574 548
213579 548
213580 548
213608 436
213633 480
213634 480
213635 480
213649 438
213654 438
213656 436
213657 436
213659 438
213660 436
213679 438
213713 ..... 464, 468
213731 440
213733 440
213743 498
213750 438
213801 438
213802 438
213851 ..... 438, 442
213857 442

213859 438
220084 268
220107 8
220317 442
220766 428
220807 280
220814 280
220817 276
220824 276
220831 278
220832 278
220834 278
220835 280
220836 276
220908 498
220939 ..... 136, 332, 334
220941 ..... 136, 332, 334, 362
220951 502
220960 502
220961 502
220963 502
220965 502
226280 ..... 62, 64, 66, 68, 300, 348, 354
226295 ..... 62, 64, 66, 68, 344, 346, 348, 354
226400 96
226861 ..... 64, 68
226926 96
226927 96
226941 ..... 70, 76, 80, 86, 90, 94
226983 ..... 70, 76, 80, 86, 90, 94
227656 30
227747 30
227914 ..... 30, 32
228292 ..... 122, 126, 130, 132
228299 ..... 122, 126
228301 ..... 122, 126, 132
228302 130
228316 ..... 138, 332, 336
228319 ..... 136, 330, 334
228322 120
228338 ..... 106, 108
228381 ..... 110, 112, 114, 116, 118
228382 ..... 126, 132
228384 ..... 126, 132
228385 ..... 126, 132
228460 ..... 122, 126
228477 ..... 122, 128
228478 ..... 122, 126
228479 ..... 122, 126
228485 ..... 122, 128
228604 ..... 122, 126
228611 ..... 122, 126
228614 122
228619 126
228848 126
229064 52
229340 48
230968 ..... 312, 358
231368 472
231448 446
231765 480
232219 ..... 182, 186
232233 ..... 174, 178, 182, 186, 224, 228
232395 ..... 182, 186, 188, 190, 194, 200, 204, 208, 214, 216
232397 ..... 174, 178, 182, 186, 224, 228
232405 ..... 224, 228
232676 262
232762 340
232806 160
233371 ..... 382, 388
233443 ..... 384, 390
233445 ..... 384, 390
233446 ..... 386, 392
233447 ..... 384, 390
233450 ..... 382, 388
233513 ..... 382, 388
233514 ..... 384, 390
233516 390
233519 382
233552 388
233621 ..... 384, 390
233622 ..... 384, 390
233623 ..... 384, 390
233625 ..... 384, 390
233635 342
233654 384
233655 384
233656 384
233657 384
233658 384
233659 384
233660 384
233661 384
233662 390
233663 390
233664 390
233665 390
233668 390
233669 390
233705 ..... 384, 390
233706 ..... 384, 390
233724 ..... 382, 388
233725 ..... 382, 388
233736 382
233738 382
233740 388
233741 388
233745 268
233748 300

233770 300
233799 342
233800 342
233841 320
233870 284
233874 284
233891 ..... 294, 296
233900 ..... 294, 296
233906 ..... 294, 296
233912 260
233913 260
233914 260
233920 286
233950 ..... 294, 296
233964 ..... 294, 296
233975 286
237363 526
240010 480
240013 480
240254 480
240264 480
245093 272
245158 ..... 382, 388
245160 502
245316 ..... 476, 488, 492
245428 274
245432 274
245433 274
245753 ..... 490, 496
245966 446
247222 306
248117 436
248144 442
248145 436
248261 456
248285 438
248348 446
248349 446
248388 442
248538 436
248643 ..... 262, 264
248833 480
248914 480
251879 262
251881 262
252002 ..... 176, 180, 226
252051 ..... 404, 480, 544
252176 160
252179 ..... 370, 380
252187 ..... 440, 444
252188 ..... 440, 444
252208 ..... 416, 510, 512
252236 400
252272 ..... 308, 360, 478
252284 18
252288 444
252291 ..... 404, 480, 544
252292 400
252303 2
252307 ..... 166, 170, 382, 388
252351 410
252398 400
252421 ..... 294, 296
252423 98
252462 ..... 406, 414
252533 420
252541 ..... 14, 440, 444
252554 ..... 416, 494
252564 458
252581 ..... 6, 100, 104, 106
252621 ..... 382, 388
252638 440
252639 ..... 132, 444
252640 418
252641 496
252655 320
252662 498
252687 ..... 136, 156, 332, 334, 350, 354
252691 ..... 440, 444
252692 484
252694 528
252701 440
252703 ..... 436, 448, 450, 532, 534, 540
252794 ..... 198, 200, 206, 214, 218
252795 ..... 162, 198, 214, 246, 248
252807 ..... 464, 468
252814 ..... 408, 490, 496
252839 54
252902 ..... 162, 182, 186
252958 304
254183 486
255461 ..... 188, 194, 208, 216
255930 28
257054 98
257089 98
258041 48
258298 48
258318 ..... 464, 468
258326 356
258343 356
258346 48
258373 50
258383 2
258384 50
258391 ..... 50, 284, 290, 318
258399 48
258454 366
258458 366
258481 48
258582 48

258585 48
258586 50
258601 50
258622 50
258627 48
258637 2
258703 ..... 464, 468
258732 356
258740 48
258757 48
258758 52
258761 50
258791 50
258792 268
258815 48
258817 48
258822 48
258823 48
258829 48
258831 48
258835 2
258837 54
258843 2
258846 52
258849 48
258850 48
258876 ..... 348, 352, 464, 468
258893 60
258901 48
258932 60
258940 48
258953 48
258963 48
258969 48
258980 50
258986 48
258989 50
258990 50
258997 56
258998 56
266277 2
273052 ..... 362, 364
273078 ..... 122, 126
273122 ..... 110, 112, 114, 116, 118
273138 ..... 110, 112, 116, 118
273258 ..... 122, 126
273259 ..... 122, 126
273278 ..... 110, 116, 118
273281 ..... 112, 114
273283 ..... 110, 116
273284 ..... 112, 114, 118, 120
273285 ..... 224, 228
273304 ..... 110, 112, 114, 116, 118
273309 120
273347 ..... 138, 330, 334
273373 138
273375 ..... 140, 142, 144
273376 138
273440 270
273453 338
273523 ..... 140, 142, 144, 330, 334
273524 ..... 138, 330, 334, 368, 376
273536 ..... 138, 330, 334
273576 128
273594 338
273615 328
273637 ..... 114, 120
273653 ..... 106, 108
273666 ..... 138, 140, 142, 144
273680 ..... 100, 102, 104
273689 338
273758 ..... 122, 126
273759 130
273760 132
273770 132
273772 120
273777 ..... 110, 112, 114, 116, 118, 120, 368
273787 108
273788 106
273789 106
273790 ..... 100, 102
273791 104
273795 ..... 100, 102, 104
273813 ..... 152, 330
273823 152
273831 ..... 110, 112, 114, 116, 118, 120, 356
273860 ..... 100, 102, 104
273861 ..... 110, 112, 114, 116, 118
273875 ..... 122, 126
273877 136
273907 ..... 122, 126, 338
273926 ..... 122, 126, 130, 132
273963 ..... 122, 126, 338
273968 ..... 156, 330, 334
275199 36
275200 36
275211 30
275232 ..... 30, 32
275265 36
275266 36
275286 ..... 26, 28
275287 ..... 26, 28
275319 ..... 26, 28
275320 ..... 26, 28
275324 30
275332 32
275348 30
275375 30
275404 24
275405 24

275460 26
275461 26
275483 26
275484 26
275504 36
275505 36
275513 36
275514 36
275521 ..... 382, 388
275524 382
275530 382
275532 382
275533 382
275542 ..... 382, 388
275543 ..... 382, 388
275563 ..... 24, 26
275614 382
275623 ..... 24, 26
275624 388
275625 388
275640 38
275641 38
275675 28
275676 28
275688 38
275690 38
275691 390
275692 388
275770 38
275779 38
275837 26
275860 32
275864 ..... 32, 348, 352
275877 30
275879 30
275902 30
275954 38
275960 38
275965 28
276062 ..... 464, 468
276117 ..... 464, 468
276140 438
276180 438
276183 442
276206 438
276326 524
276631 498
276770 ..... 464, 468, 542
276790 410
276839 ..... 348, 352, 436
279085 268
279528 268
283002 96
283008 394
283012 240
283014 236
283015 242
283016 236
283017 236
283018 236
283035 ..... 174, 224
283036 ..... 174, 224
283037 182
283038 182
283039 182
283046 166
283047 166
283048 166
283049 244
283050 244
283051 220
283052 220
283053 194
283055 194
283056 194
283057 ..... 188, 194, 208, 216
283058 ..... 188, 194, 208, 216
283059 ..... 188, 190, 194, 200, 204, 208, 216
283060 188
283061 ..... 382, 388
283062 ..... 382, 388
283063 ..... 166, 170, 174, 178
283065 ..... 166, 170
283066 394
283068 ..... 174, 178
283069 ..... 174, 178
283070 ..... 174, 178, 224
283074 ..... 200, 204
283075 ..... 200, 204
283077 ..... 382, 388
283078 200
283079 200
283080 200
283081 244
283082 246
283091 ..... 182, 224, 228
283092 ..... 224, 228
283096 ..... 190, 200, 204, 216, 232, 236, 240
283097 244
283098 182
283099 182
283102 166
283104 166
283108 182
283109 182
283141 194
283143 194
283144 194
283145 200
283146 200

283147 200
283159 244
283160 244
283161 244
283162 246
283164 220
283172 170
283173 170
283174 170
283175 178
283176 178
283180 194
283182 194
283183 194
283184 204
283185 204
283186 204
283190 248
283191 248
283192 248
283193 248
283194 244
283195 246
283199 220
283200 220
283201 166
283202 ..... 166, 170, 174, 178
283203 174
283204 174
283205 220
283231 166
283232 166
283233 166
283246 188
283247 188
283248 188
283249 188
283251 190
283327 190
283378 ..... 174, 178, 224
283409 166
283410 166
283411 166
283412 ..... 174, 178
283413 ..... 174, 178
283417 ..... 194, 208
283419 ..... 194, 208
283420 ..... 194, 208
283421 ..... 174, 178
283422 ..... 174, 178
283426 174
283427 174
283428 ..... 204, 216
283429 ..... 204, 216
283430 ..... 204, 216
283431 ..... 204, 216
283432 ..... 204, 216
283433 ..... 204, 216
283434 244
283435 244
283436 244
283437 246
283438 ..... 246, 248
283439 ..... 246, 248
283440 178
283441 178
283442 178
283443 178
283447 208
283449 208
283450 208
283451 216
283452 216
283453 216
283456 166
283457 166
283458 166
283459 244
283460 244
283461 220
283462 220
283463 170
283464 170
283465 170
283466 248
283467 248
283468 220
283469 220
283470 220
283471 220
283500 ..... 162, 164
283502 ..... 162, 164
283507 ..... 216, 240
283508 186
283509 186
283555 ..... 384, 390
283560 ..... 244, 248
283561 186
283562 186
283563 186
283564 186
283565 186
283566 186
283567 164
283569 164
283571 ..... 382, 388
283579 394
283773 ..... 232, 236, 240
283776 242
283777 242

283783 290
283785 ..... 198, 212, 214
283786 212
283791 ..... 188, 194, 208, 216
283797 ..... 168, 170, 176, 180, 188, 194, 208
283807 ..... 168, 170, 176, 180, 188, 194, 208
283818 ..... 190, 200, 204, 216
283820 ..... 190, 200, 204, 216
283822 208
283823 208
283824 208
283830 240
283831 240
283832 240
283833 240
283836 240
283837 240
283838 242
283839 240
283849 ..... 56, 58, 60, 250, 252, 254
283889 ..... 198, 214
283906 ..... 190, 200, 204, 216
283907 ..... 190, 200, 204, 216
283909 ..... 190, 198, 212
283910 ..... 190, 198, 212
283984 ..... 168, 170, 176, 180
283987 ..... 190, 198, 212, 228
283988 ..... 190, 198, 212, 228
283989 ..... 190, 198, 212, 228
284215 306
284548 306
284549 312
284550 314
284705 ..... 286, 292
284706 ..... 286, 292
284707 ..... 286, 292
284708 ..... 286, 292
284709 ..... 286, 292
284710 ..... 286, 292
284900 522
284946 528
284971 526
284975 546
284976 526
286087 96
286089 ..... 96, 98
286257 ..... 62, 64, 66, 68, 348, 352
286315 ..... 62, 64, 344, 348, 352
286316 ..... 62, 64, 344, 348, 352
286317 ..... 64, 324, 352
286318 ..... 62, 66, 68, 322, 346, 348
286319 ..... 62, 64, 66, 68, 322, 324, 346, 348, 352
286320 68
286321 ..... 322, 324
286322 ..... 322, 324
286323 ..... 322, 324
286329 ..... 62, 64, 348, 352
286330 ..... 66, 68, 346
286331 ..... 62, 64, 66, 68, 346, 348, 352
286332 ..... 64, 324, 352
286333 68
286362 ..... 82, 86, 90, 94
286363 ..... 82, 86, 90, 94
286440 ..... 70, 76, 82, 86, 90, 94
286445 98
286461 ..... 70, 76, 80, 84, 88, 92, 344, 346, 348, 352
286462 ..... 70, 76, 80, 84, 88, 92
286463 ..... 80, 84, 90, 92
286464 ..... 80, 86, 90, 94
286465 ..... 80, 84, 90, 92
286466 ..... 80, 86, 90, 94
286475 ..... 70, 76, 82, 86, 90, 94, 344, 346, 348, 352
286476 ..... 70, 76, 82, 86, 90, 94, 344, 346, 348, 352
286477 ..... 70, 76, 82, 86, 90, 94, 344, 346, 348, 352
286478 ..... 70, 76, 82, 86, 90, 94
286479 ..... 22, 72, 76, 82, 86, 90, 94, 348, 352
286481 ..... 70, 76, 82, 86, 90, 94, 348, 352
286483 98
286485 98
286486 98
286488 98
286489 98
286490 98
286493 ..... 70, 76, 80, 84, 88, 92
286502 8
286503 8
286562 ..... 70, 74, 78, 84, 88, 92
286563 ..... 78, 84, 88, 92
286564 ..... 70, 74, 88, 92
286565 ..... 76, 78, 84, 88
286566 ..... 70, 76
286567 76
286574 80
286575 ..... 80, 88
286576 84
286578 92
286579 ..... 70, 74, 78, 84, 88, 92
286580 ..... 78, 84, 88, 92
286581 ..... 70, 74, 88, 92
286582 ..... 76, 78, 84, 88
286583 ..... 70, 76
286584 76
286591 80
286592 ..... 80, 88
286593 84
286595 92
286597 70
286598 74
286599 74
286600 74

286609 70
286610 74
286611 74
286612 74
286616 78
286617 78
286618 84
286619 88
286620 92
286621 ..... 72, 76, 82, 86, 90, 94
286627 ..... 70, 76, 80, 84, 88, 92
286628 ..... 80, 84, 90, 92
286629 ..... 80, 86, 90, 94
286663 64
286664 64
286665 64
286666 64
286667 64
286668 62
286669 62
286670 62
286671 62
286673 68
286674 68
286675 68
286676 68
286677 68
286678 68
286679 66
286680 66
286681 66
286682 66
286683 324
286684 324
286685 324
286686 324
286687 324
286688 324
286689 324
286690 322
286691 322
286692 322
286693 322
286703 96
286705 ..... 62, 64, 66, 68
286725 8
286741 8
286758 ..... 70, 74, 78, 84, 88, 92
286759 ..... 78, 84, 88, 92
286760 ..... 70, 74, 88, 92
286761 ..... 76, 78, 84
286763 ..... 70, 76
286764 76
286767 80
286768 ..... 80, 88
286769 84
286770 92
286779 70
286780 74
286781 74
286782 74
286787 78
286788 78
286789 84
286790 88
286791 92
286826 96
286861 ..... 80, 86, 90, 94, 352
286862 ..... 80, 86, 90, 94
286863 ..... 80, 86, 90, 94
286865 78
286866 ..... 80, 84
286867 88
286868 92
286870 78
286871 ..... 80, 84
286872 88
286873 92
286875 78
286876 ..... 80, 84
286877 88
286878 92
286886 78
286887 78
286888 84
286889 88
286890 92
287031 540
287032 540
287193 502
287449 ..... 290, 484
287450 ..... 290, 484
287451 484
287466 502
287467 502
287468 502
287469 502
287470 502
287471 502
287472 502
287473 502
287613 502
287701 304
287702 ..... 500, 524
287705 524
287771 ..... 498, 502
287859 520
287887 ..... 448, 450, 540
287888 ..... 448, 450, 540
287889 ..... 450, 534, 540

287890 ..... 450, 534, 540
287939 480
288195 268
288438 2
289220 4
289235 12
289261 4
289341 4
289346 46
289347 46
289349 4
289356 46
289357 46
289358 4
289359 12
289375 18
289380 18
289439 18
289483 18
289487 18
289519 18
289520 18
289618 18
289621 18
289654 14
289742 4
289759 160
289762 268
289763 268
289869 160
289880 ..... 100, 102, 104
289924 18
289925 18
291484 262
291485 262
292692 ..... 306, 360
293053 ..... 404, 464, 468, 542, 544
293054 ..... 404, 544
295140 416
295211 480
295212 480
295213 480
295261 ..... 464, 468
295407 476
295766 476
295770 476
295853 ..... 476, 488, 492
295927 ..... 486, 506, 512
295929 ..... 198, 212
295992 ..... 464, 468
301034 542
301047 542
301049 542
301065 542
301126 ..... 464, 468
301127 ..... 464, 468
301318 484
301427 ..... 438, 442, 454
301441 442
301513 456
301629 526
301633 456
301805 446
301806 446
301807 446
301971 422
301992 442
301993 442
301994 438
302204 ..... 268, 308, 524
303021 306
303033 306
303169 312
303251 ..... 308, 360
303283 308
303341 308
303379 304
303380 306
303486 306
303491 306
303492 ..... 304, 360
303520 360
303525 ..... 304, 360
303691 304
303693 304
303766 304
303832 306
303839 ..... 304, 360
303898 308
303961 304
304040 ..... 464, 468
304371 518
304494 448
304514 438
304520 438
304521 442
304611 394
304658 404
304668 404
304931 442
308056 438
308536 436
308538 438
308648 ..... 438, 442
308658 484
308725 ..... 406, 422
308726 ..... 406, 414, 426
308732 ..... 406, 414
308740 ..... 406, 414
308755 ..... 406, 414

308774 472
308848 426
308850 438
308852 426
308859 438
308878 462
308879 462
311038 150
311054 362
311055 362
311068 362
311069 362
311190 134
311193 134
311195 148
311207 134
311210 ..... 134, 330
311233 ..... 168, 170, 176, 180, 188, 194, 208
311237 ..... 110, 112, 116, 118
311238 ..... 110, 112, 116, 118
311284 108
311285 ..... 100, 102
311303 134
311306 ..... 134, 330
311318 264
311321 ..... 362, 364
311322 ..... 362, 364
311325 ..... 134, 330, 334
311327 ..... 134, 330, 334
311347 ..... 330, 334
311354 ..... 190, 198, 212
311359 ..... 114, 120
311360 ..... 190, 200, 204, 218
311365 ..... 134, 330, 334
311368 ..... 134, 334
311405 134
311408 134
311451 ..... 190, 200, 204, 216
311461 ..... 190, 198, 212
311462 ..... 190, 200, 204, 216
311464 302
311493 268
311523 ..... 134, 330, 334, 348, 352
311524 156
311611 ..... 100, 104, 106
311612 ..... 100, 104
311613 ..... 100, 104, 106
311615 ..... 138, 330, 334
311617 ..... 138, 330, 334
311620 ..... 122, 126
311627 ..... 100, 104
311632 120
311643 ..... 148, 150
311644 ..... 148, 150
311645 ..... 148, 150
311646 ..... 148, 150
311647 148
311648 148
311658 148
311672 ..... 138, 330, 334
311675 134
311676 134
311694 154
311695 158
311724 132
311729 ..... 154, 330, 334
311745 134
311746 134
311752 ..... 154, 330
311753 ..... 158, 330
311789 344
311790 346
311795 156
311822 ..... 156, 330
311863 334
311864 334
311868 334
311870 334
311882 338
311906 ..... 152, 330, 334
311949 108
311959 364
311964 ..... 152, 154, 330, 334
311965 ..... 158, 330, 334
311972 364
312134 ..... 232, 236, 242
312654 ..... 168, 170, 176, 180, 188, 190, 194, 200, 204, 208, 218
312655 ..... 190, 198, 200, 204, 212, 216
312673 326
312675 160
312680 160
312704 2
312706 546
312777 160
313007 290
313011 284
313012 284
313020 284
313035 ..... 154, 158
313064 260
313114 ..... 286, 292
313192 260
313303 18
313304 18
313366 ..... 286, 292
313368 ..... 284, 290
313374 326
313406 304
313425 304

313432 18
313441 286
313461 318
313496 ..... 232, 236, 242
313497 ..... 232, 236, 242
313499 ..... 232, 236, 240
313500 ..... 232, 236, 240
313501 ..... 394, 398
313502 ..... 394, 398
313510 268
313511 ..... 232, 236, 240
313523 232
313524 232
313525 232
313526 232
313529 242
313530 240
313556 240
313557 240
313566 302
313643 260
313705 302
313713 18
313725 268
313728 524
313729 268
313730 270
313733 268
313734 ..... 8, 484
313744 394
313745 394
313748 290
313749 394
313750 394
313753 290
313767 12
313776 290
313777 290
313780 394
313783 18
313787 270
313788 394
313789 396
313790 396
313791 290
313792 290
313793 284
313794 ..... 104, 284
313797 394
313798 398
313799 398
313800 398
313801 394
313802 398
313803 400
313804 398
313805 398
313806 398
313807 398
313808 394
313809 398
313810 398
313811 398
313812 398
313813 398
313814 398
313815 398
313816 400
313817 398
313818 398
313819 398
313820 398
313821 398
313822 398
313824 398
313825 398
313826 398
313827 398
313828 398
313829 400
313830 400
313831 400
313832 402
313833 398
313834 398
313835 398
313836 398
313837 398
313838 398
313839 400
313841 398
313843 402
313844 400
313845 400
313846 402
313847 400
313848 400
313849 400
313859 ..... 286, 292
313869 398
313881 ..... 268, 400
313882 398
313883 398
313884 398
313914 284
313920 268
313921 284
313922 284
313940 260
313964 ..... 110, 112, 114, 116, 118, 120

313965 160
314062 436
314076 520
314082 422
314136 ..... 438, 442
314169 ..... 438, 442
314173 428
314174 428
314276 456
314292 484
314389 ..... 490, 496
314391 504
314392 504
314394 504
314395 488
314396 488
314397 484
314399 484
314401 504
314402 490
314416 484
314417 484
314537 490
314581 286
314585 528
314586 528
314587 528
314588 528
314591 506
314592 506
314593 506
314594 506
314595 506
314605 ..... 506, 512
314606 ..... 506, 512
314645 484
314657 434
314680 ..... 452, 536
314697 ..... 506, 512
316044 306
316095 ..... 304, 360
316096 ..... 304, 360
316110 304
316118 304
316119 304
316284 ..... 304, 360
316293 308
316330 ..... 306, 358
316358 304
316639 ..... 268, 308
316649 ..... 268, 308
316662 ..... 268, 360
316793 ..... 306, 358
316794 304
316847 ..... 306, 358
316848 ..... 306, 358
316851 ..... 306, 358
316859 ..... 310, 360
316860 ..... 310, 360
319051 30
319095 ..... 22, 348, 352
319098 22
319099 22
319100 22
319101 22
319102 22
319103 22
319104 22
319105 ..... 22, 348, 352
319180 ..... 40, 42, 44
319191 32
319222 ..... 24, 26, 28
319223 ..... 24, 26, 28
319225 ..... 34, 36, 38
319228 36
319229 ..... 40, 42, 44
319230 ..... 42, 44
319231 ..... 40, 42, 44
319265 32
319287 38
319345 22
319346 22
319347 22
319366 ..... 24, 26, 28
319376 36
319377 ..... 36, 38
319378 ..... 36, 38
319394 ..... 24, 26
319403 28
319404 28
319474 50
319508 48
319509 48
319540 22
319542 50
319548 60
319549 60
319550 60
319563 60
319564 60
319583 32
319587 34
319588 34
319662 22
319707 30
319708 30
319878 286
320011 ..... 308, 360
320026 ..... 6, 96
320039 314

320060 ..... 310, 360
320089 96
320108 50
320109 50
320110 50
320122 286
320148 ..... 22, 56, 58, 60
320154 310
320160 52
320161 52
320167 ..... 30, 52
320168 ..... 100, 104, 106
320169 2
320171 2
320175 ..... 138, 332, 336
320176 ..... 314, 466, 468
320179 138
320180 ..... 124, 128, 130, 132, 138, 140, 142, 144, 152, 154, 332, 336, 426
320181 ..... 24, 26, 28
320182 32
320187 ..... 136, 332, 336
320190 ..... 26, 28, 40, 42, 44, 54, 56, 58, 60, 320, 370
320192 ..... 136, 332, 336, 338
320196 ..... 100, 102, 104
320199 52
320205 ..... 308, 312, 368
320206 ..... 30, 32
320207 ..... 110, 112, 114, 116, 118, 120
320208 ..... 314, 526
320213 312
320214 96
320215 96
320218 ..... 12, 294, 298
320219 314
320220 ..... 320, 396
320236 50
320246 ..... 56, 58, 60
320248 260
320251 52
320259 454
320274 182
320290 ..... 24, 26, 28, 34, 36, 38
320304 4
320311 96
320327 20
320331 292
320336 ..... 56, 58, 60, 250, 252, 254
320358 ..... 472, 478
320360 ..... 344, 346, 348, 352, 406, 498
320388 404
320389 458
320390 ..... 266, 298, 458
320397 404
320404 320
320409 ..... 266, 298
320410 ..... 266, 298
320441 ..... 370, 376
320448 ..... 40, 42, 44, 56, 58, 60, 250, 252, 254
320486 52
320500 456
320559 414
322022 484
322046 456
322142 410
322148 ..... 408, 410, 412
322149 412
322157 412
322158 412
322160 412
322161 412
322192 422
322193 422
322195 422
322197 422
322219 456
322256 504
322372 436
322377 442
322383 ..... 516, 518
322397 436
322409 422
322456 428
322486 428
322555 474
322557 456
322561 ..... 406, 414
322668 462
322676 ..... 464, 468
322750 542
322770 436
322870 404
322872 404
322914 ..... 446, 544
322915 428
322916 428
322917 428
322918 428
322924 428
322925 428
322926 428
322961 454
322962 454
322970 ..... 106, 446
322981 456
322996 430
322997 430
323003 ..... 246, 248
323023 ..... 190, 198, 212
323032 ..... 56, 58, 60

323049 306
323051 ..... 56, 58, 60
323082 54
323083 54
323086 54
323087 54
323130 ..... 256, 258
323145 ..... 256, 258
323157 58
323158 58
323164 ..... 250, 252, 254
323165 254
323166 ..... 252, 254
323169 ..... 252, 254
323172 ..... 252, 254
323207 258
323208 258
323209 258
323210 258
323211 258
323212 258
323343 190
323344 190
323345 190
323346 224
323347 224
323348 224
323349 224
323350 232
323351 232
323352 232
323353 232
323355 220
323356 190
323361 236
323362 236
323381 256
323428 ..... 224, 228
323429 ..... 224, 228
323499 296
323516 268
323519 224
323659 198
323660 198
323661 198
323662 228
323663 198
323664 214
323665 212
323666 212
323667 228
323668 214
323669 214
323670 212
323671 214
323672 214
323673 212
323674 214
323687 106
323688 106
323694 296
323698 ..... 516, 518
323718 258
323772 ..... 250, 252, 254
323773 ..... 56, 58, 60, 250
323795 ..... 250, 252, 254
323808 228
323826 244
323827 244
323828 246
323829 244
323937 264
323994 284
323995 284
323996 498
323998 414
327086 ..... 268, 308, 360
327089 ..... 306, 360
327179 304
327255 306
327294 312
327304 312
327428 304
327429 304
327532 314
327534 308
327535 308
327561 304
327563 314
327588 314
327600 ..... 308, 358
327649 312
327655 360
327656 358
327659 314
327664 314
327672 306
327680 314
327682 358
327692 314
327694 312
327695 314
327696 314
327704 304
327710 310
327716 308
327717 ..... 268, 312, 358
327738 308
327739 312
327740 312

327745 308
327749 306
327751 306
327755 304
327756 304
327771 312
327786 306
327798 ..... 308, 358
327802 ..... 268, 312, 358
327807 ..... 312, 358
327808 ..... 312, 358
327817 314
328085 ..... 452, 536
328089 ..... 516, 518
328120 426
328128 476
328133 456
328142 524
328143 476
328152 ..... 422, 426
328154 ..... 422, 426
328156 ..... 424, 426
328157 422
328158 424
328159 424
328160 424
328161 422
328162 424
328164 422
328165 422
328174 422
328175 422
328176 ..... 422, 426
328178 410
328181 422
328183 426
328184 424
328185 422
328186 422
328187 422
328188 422
328196 426
328197 426
328198 426
328199 426
328200 426
328201 426
328202 426
328203 426
328261 410
328262 ..... 408, 412
328269 412
328283 412
328288 410
328290 410
328291 410
328292 410
328293 410
328306 410
328307 410
328308 410
328309 410
328310 410
328311 410
328312 410
328313 410
328318 ..... 516, 518
328348 ..... 464, 468, 542
328349 ..... 464, 468, 542
328370 ..... 406, 414
328411 516
328420 436
328491 456
328534 264
328538 456
328539 264
328547 264
328549 520
328550 520
328555 522
328556 264
328560 ..... 516, 518
328562 524
328565 524
328713 ..... 406, 414
328756 452
328758 452
328760 452
328763 452
328874 528
330622 50
335133 ..... 506, 512
335144 456
335160 538
335301 ..... 14, 318
335851 48
335887 ..... 504, 510
335891 480
335912 480
335924 ..... 138, 330, 334
335981 476
337117 434
337124 438
337143 ..... 448, 450, 532
337152 ..... 348, 352, 436, 450, 532
337206 436
337276 442
337284 ..... 438, 442
337362 446
337366 446

337407 ..... 464, 468
337427 412
337429 412
337430 412
337431 412
337432 412
337433 412
337440 410
337441 410
337456 ..... 464, 468
337457 ..... 464, 468
337463 ..... 464, 468
337464 ..... 464, 468
337634 456
337635 456
337636 456
337707 430
337709 430
337711 430
337712 430
337715 430
337716 430
337717 430
337718 430
337720 430
337721 430
337722 430
337723 430
337727 430
337731 430
337732 430
337770 412
337773 412
337774 ..... 406, 408, 410
337777 ..... 452, 536
337778 ..... 452, 536
337779 ..... 452, 536
337780 ..... 452, 536
337804 442
337821 456
337823 412
340049 274
340050 280
340051 276
340052 278
340076 402
340077 400
340078 400
340091 328
340095 340
340096 340
340113 4
340122 4
340125 ..... 464, 468
340131 524
340132 524
340146 ..... 138, 330, 334
340164 268
340183 264
340191 ..... 106, 108
340193 4
340210 318
340212 318
340215 4
340216 126
340218 264
340224 ..... 110, 112, 114, 116, 118
340289 296
340492 348
340493 352
340571 114
340648 106
340672 50
340681 ..... 34, 36, 38
340683 250
340841 ..... 34, 36, 38
340897 50
340954 296
340955 ..... 266, 296
340956 ..... 266, 296
344336 542
344409 542
344412 542
344413 542
347141 526
347185 ..... 406, 414
347342 524
347349 424
347405 422
347410 422
347416 422
347417 422
347483 476
347487 476
347500 468
347553 476
347665 472
347691 480
347692 480
347722 434
347775 468
347778 468
347923 456
347949 486
347963 464
347975 424
347976 424
347977 424
347978 424
347979 ..... 504, 506, 510, 512

349362 530
352001 ..... 266, 296
352163 ..... 266, 296
352697 460
357012 430
357064 430
357173 ..... 404, 544
357174 ..... 404, 544
357195 526
357230 476
357233 450
357234 450
357299 456
357455 458
357492 456
357512 ..... 404, 544
357567 526
357606 526
357797 10
357937 410
357945 522
360004 318
360035 106
360044 328
360045 328
360069 318
360072 318
360076 318
360077 318
360079 318
360103 318
360105 320
360106 318
360108 320
360110 318
360114 318
360119 318
360120 318
360122 318
360127 14
360134 318
360144 122
360150 36
360151 ..... 36, 38
360168 318
360175 8
360176 8
360186 122
360199 134
360201 134
360212 266
360299 ..... 56, 58, 60
360358 ..... 284, 294, 296
360361 4
360374 18
360375 18
360376 146
360378 18
360379 18
360405 272
360406 272
360407 272
360408 272
360409 272
360410 272
360411 272
360449 16
360509 ..... 26, 28
360520 46
360521 46
360526 ..... 294, 296
360540 ..... 134, 330, 334, 348, 352
360541 268
360551 ..... 294, 296
360553 16
360559 ..... 294, 296
360655 524
360679 362
360714 290
360716 524
360720 320
360723 318
360734 320
360748 4
360749 4
360750 4
360751 4
360754 46
360755 46
360756 458
360774 290
360784 18
360785 18
360812 290
360818 290
360823 266
360824 266
360828 266
360835 ..... 2, 52
360840 266
360847 320
360848 318
360850 320
360862 320
360863 320
360869 316
360870 96
360871 316
360875 284
360924 480

360925 480
360927 480
360939 318
360940 318
360971 458
360987 284
360992 284
368017 458
368221 404
368225 4
368226 4
368239 266
368338 266
368380 472
368386 272
368394 272
368424 272
368425 272
368457 476
368460 476
368631 524
368669 414
368673 496
368674 492
368675 492
368677 492
368678 492
368684 492
368685 492
368686 492
368689 510
368690 510
368691 510
368692 510
368699 282
368700 282
368701 282
368702 282
368703 282
368704 282
368705 282
368706 282
368707 282
368708 282
368709 282
368710 282
368711 282
368712 282
368713 282
368714 282
368715 282
368716 282
368717 282
368718 282
368719 282
368720 282
368761 ..... 414, 422
368843 420
368845 420
368863 424
369679 492
378133 404
378236 420
378248 416
378250 512
378251 512
378252 512
378253 512
378254 512
378372 496
378373 510
378435 518
500303 ..... 266, 296, 456
500448 538

B

B6042 548
B6044 548
B6045 548
B6046 548
B6213 548
B6288 304
B6400 540
B6413 382
B6414 382
B6415 382
B6416 382
B6417 388
B6418 388
B6419 388
B6460 358
B6801 326
B7022 300
B7023 300
B7027 366
B7028 356
B7029 394
B7030 302
B7038 428
B7039 428
B7041 426
B7048 520
B7052 520
B7082 232
B7083 236
B7113 240
B7114 240
B7116 240
B7117 220

B7118..... 220
B7119..... 220
B7120..... 220
B7121..... 220
B7122..... 342
B7123..... 342
B7127..... 244
B7128..... 244
B7130..... 244
B7131..... 248
B7155..... 344
B7156..... 346
B7180..... 430
B7181..... 430
B7193..... 240
B7195..... 244
B7217..... 542
B7230..... 328
B7238..... 340
B7241..... 538
B7302.....368, 372
B7303..... 380
B7304..... 374
B7305..... 374
B7306..... 374
B7307..... 376
B7312..... 434
B7314..... 452
B7317..... 434
B7326..... 430
B7338..... 220
B7339..... 244
B7340..... 232
B7342..... 544
B7343..... 450
B7344..... 450
B7345..... 450
B7346..... 318
B7347.....452, 536
B7348.....452, 536
B7350..... 296
B7357..... 330
B7358..... 330
B7359..... 330
B7362..... 334
B7365..... 348
B7366..... 352
B7391..... 312
B7392..... 312
B7395..... 376
B7396..... 376
B7398.....312, 358
B7431..... 520
B7464..... 394
B7466..... 394
B7476..... 526
B7480.....284, 290
B7489.....516, 518
B7490.....516, 518
B7506..... 520
B7507..... 528
B7542..... 546

C

C2086..... 368
C2087..... 368
C2088..... 368
C2089..... 368
C2169..... 368
C2170..... 368
C2171..... 358
C2173..... 312

CUSTOMERS
MacDon.com

DEALERS
Portal.MacDon.com

Trademarks of products are the marks of their respective manufacturers and/or distributors.

Printed in Canada