MacDon

# R113/R116
# Rotary Disc Pull-Type

Parts Catalog

262306 Revision A

Original Instruction

*The Harvesting Specialists.*

R113/R116 Rotary Disc Pull-Type

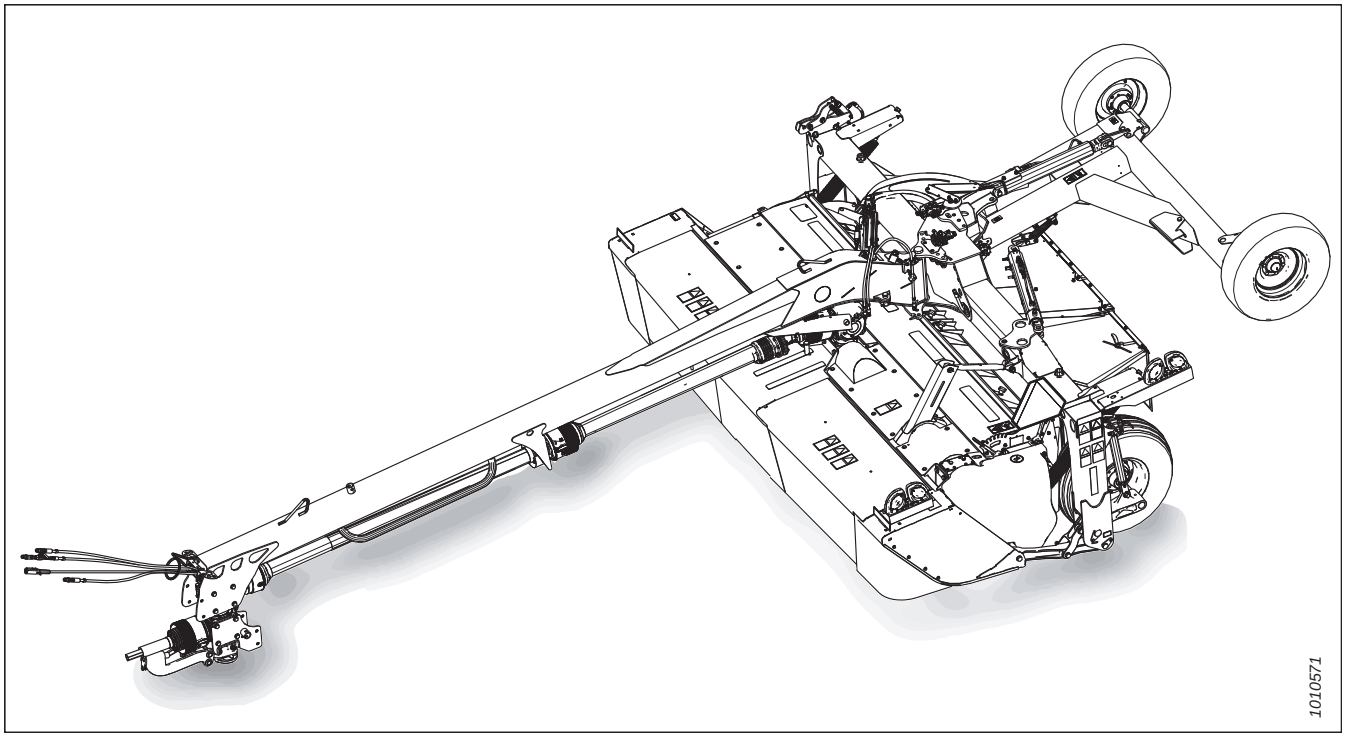


Published: September 2023

**NOTE:**

Keep your MacDon publications up-to-date. The most current version can be downloaded from our website (*www.macdon.com*) or from our Dealer-only site (*https://portal.macdon.com*) (login required).

English and French versions of this document can be ordered from MacDon, downloaded from the MacDon Dealer Portal (*https://portal.macdon.com*) (login required), or downloaded from the MacDon website (*www.macdon.com*).

© 2023 MacDon Industries, Ltd.

The information in this publication is based on the information available and in effect at the time of printing. MacDon Industries, Ltd. makes no representation or warranty of any kind, whether expressed or implied, with respect to the information in this publication. MacDon Industries, Ltd. reserves the right to make changes at any time without notice.

# Introduction

This Parts Catalog lists all the replacement parts that can be ordered for a MacDon R113 or R116 Rotary Disc Pull-Type.

When ordering, be sure to use the complete and proper part number. Some parts vary with header size; be sure you are ordering the correct part number for your unit.

**Bold text is used to indicate updates made at the current revision level**. With each new revision of the catalog, previous revisions are returned to regular text.

Electrical connectors used on MacDon products are available for sale but not listed in this catalog. For the list of available connectors, refer to the Electrical Connectors Parts Catalog (MD #169641).

In this catalog, right-hand (RH) and left-hand (LH) are determined from the operator's seated driving position in the tractor cab. An arrow is sometimes used in illustrations to indicate forward position as shown below.

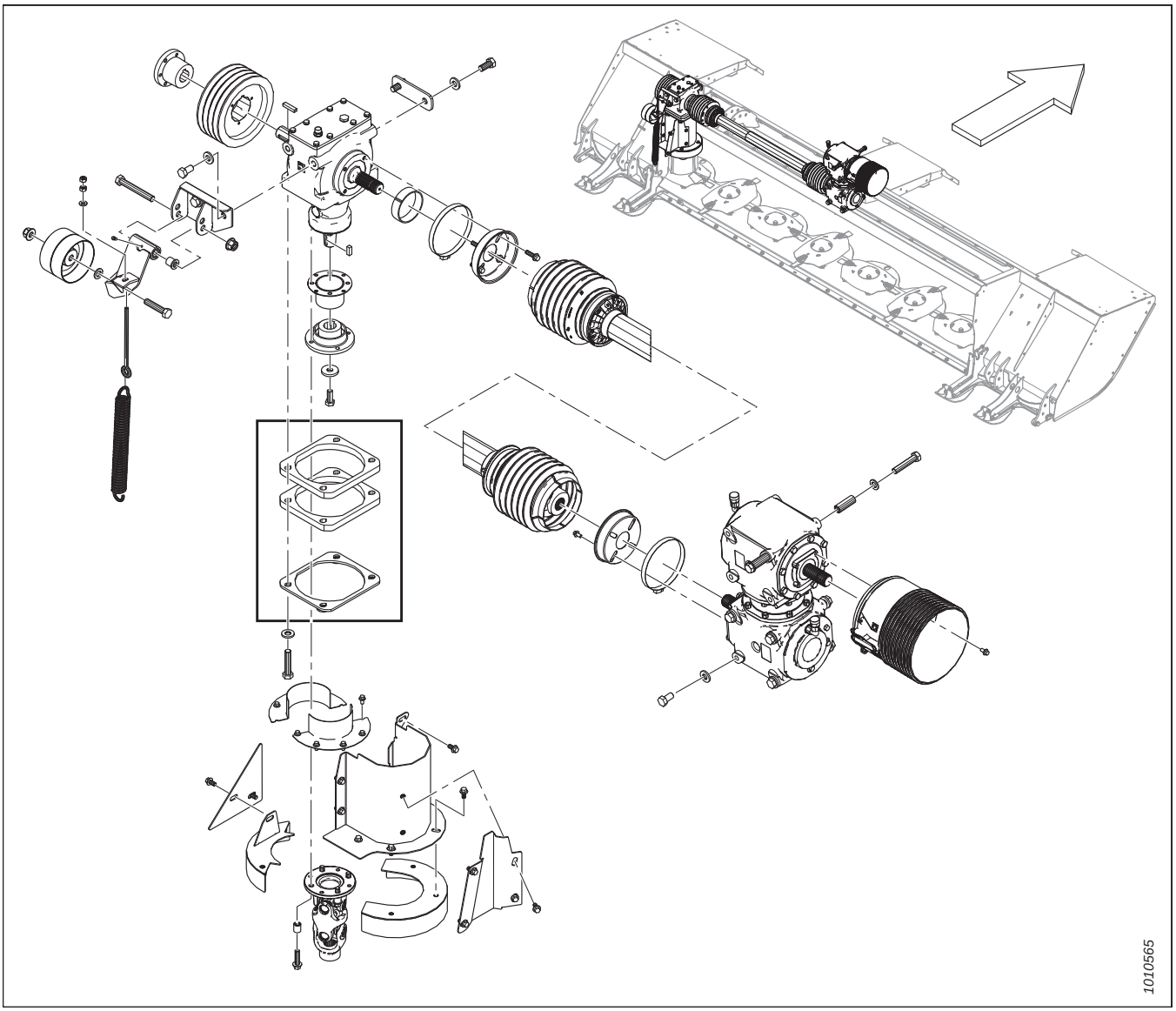

## Abbreviations

| | | |
|---|---|---|
| A/R – as required (quantity varies) | ASSY – assembly | BHRN – button head rib neck |
| BV – ball valve | CCW – counterclockwise | CON – conical (spring washer) |
| CSK – countersink | C/W – complete with | CW – clockwise |
| DBLE – double | DK – double knife | DR – double reel |
| DT – distorted thread | FLG – flange | GA – gauge |
| GR – grade | GS – grass seed | HD – head |
| HDR – header | HFA – hydraulic fore-aft | HH – hex head |
| HNBR – hydrogenated nitrile butadiene rubber | HYD – hydraulic | I.D. – inside diameter |
| IP – internal plus (torx plus) | KP – knife pressure | KR – knife return |
| LG – long | LH – left hand (determined from Operator's position, facing forward) | LK – lock |
| MACH – machine | MD – MacDon | MFA – manual fore-aft |
| MY – model year | NC – national coarse thread | NF – national fine thread |
| NSS – not sold separately | NT – narrow transport | O.D. – outside diameter |
| OPT – optional | PO – pilot operated | PT – pull-type (mower conditioner) |
| RC – roller chain | REF – reference, part number called up elsewhere in catalog | REG – regular |
| RH – right hand (determined from Operator's position, facing forward) | RHSN – round head, square neck or square neck carriage bolt | RHSSN – round head, short, square neck |
| RTD – rotating tine drum | SAE – Society of Automotive Engineers (part produced to comply with) | SD – side draper |
| SER – serrated | SK – single knife | SKT HD – socket head |
| SMTH – smooth | SMV – slow moving vehicle | SOCK – socket |
| SP – self-propelled (windrower) header | SPCL – special | SPH – spherical |
| SPI – serrations per inch (knife Sections) | SR – single reel | STL – steel (stainless) |
| STR – standard | STVR – Stover | TFL – thread full length |
| THD – thread | TR – triple reel | UCA – upper cross auger |
| UDK – untimed double knife | UNC – unified coarse thread | UNEF – unified extra fine thread |
| UNF – unified fine thread | UNS – unified special thread series | VK – veritcal knife |
| WF – wide frame | ZP – zinc plated | |

## Serial Number Breaks

The side of the serial number on which the dash (–) appears determines whether the part is used "up to" or "after" the serial number given.

**Example:**

- –451189 Used on machines up to and including serial number 451189
- 451190– Used on machines including and after serial number 451190

## Summary of Changes – R113/R116 (262306 Rev. A)

This list covers changes made since the last revision (262009 Rev. A).

| Section | Summary of Change | Internal Use Only |
|---|---|---|
| *3 Cutterbar Components (Large Drum) – Eight and Ten Disc (2017 and Prior), page 9* | Added optional rock guard 359024. | ECN 63622 |
| *4 Cutterbar Components (Small Drum) – Eight and Ten Disc (2018 and Later), page 13* | Added optional rock guard 359024. | ECN 63622 |
| | Added Updated Blades kit 359122. | ECN 64004 |
| *5 Cutterbar Components – Eight and Ten Disc with Quick Change Blades, page 17* | Added optional rock guard 359024. | ECN 63622 |
| *6 Cutterbar – Disc Timing Tool, page 21* | Added two-piece disc timing tool and new illustration 1042647. | ECN 63134 |
| *10 Cross Shaft Driveline – Service Parts, page 31* | Roll pin 247125 superseded by 256663. | ECN 63496 |
| *14 Roll Conditioner – Polyurethane/Steel (2015), page 41* | Tolerance clip 135913 superseded by latch assembly 320524. Changed the clip to “REF” and added a footnote for clarity. | ECN 64457 |
| *15 Roll Conditioner – Polyurethane/Steel (2016 and Later), page 45* | Roll stop 247259 made service-only for model year 2023 and prior. Added roll stop 259621 for model year 2024 and later. Roll arm 247828 superseded by 359253. Added roll stop kit 259622, which includes roll arm 359253 and roll stop 259621, for model year 2023 and prior headers. Updated illustration 1036373 to 1042623. | ECN 64592 |
| | Tolerance clip 135913 superseded by latch assembly 320524. Changed the clip to “REF” and added a footnote for clarity. | ECN 64457 |
| *16 Roll Conditioner – Roll Arms and Stops, page 51* | Added new section for roll stop kit 259622 to help customers identify which roll stops and roll arms their machine currently has installed; includes new illustration 1042651. | ECN 64592, Product Support |
| *18 Roll Conditioner – Shields, page 55* | Stud assembly 246266 superseded by weldment 246226. Removed clip 135813 and changed quantity of rivet 113799 from 3 to 2. Added latch assembly 320524. Updated illustration from 1015003 to 1042645. | ECN 64457 |
| *19 Roll Conditioner – Header Attachment, page 57* | Updated part description for belt tensioner kit 281695. Added missing straight pin 281685. Added footnote to clarify which parts are included in the kit. Updated illustration from 1039937 to 1042569. | ECN 54630 |
| | Revised footnotes to clarify that the belt tensioner kit comes with a 230 mm eye bolt, but you need to use 192 mm eye bolt 281986 on a roll conditioner. | ECN 55894 |
| | Added footnote to use one or two washers 184717 as required to align the belt drive. | ECN 60990 |
| | Added footnote to order latch 135815 until stock is depleted, then order latch assembly 320524. | ECN 64457 |
| *21 Finger Conditioner – Shields, page 65* | Stud assembly 246266 superseded by weldment 246226. Removed clip 135813 and rivet 113799. Added latch assembly 320524. Updated illustration from 1026027 to 1042644. | ECN 64457 |

| Section | Summary of Change | Internal Use Only |
|---|---|---|
| *22 Finger Conditioner – Header Attachment, page 67* | Replaced tensioner weldment 281630 (not serviced separately) with belt tensioner kit 281695. Added missing straight pin 281644. Updated illustration from 1033076 to 1042580. | ECN 54630 |
| | Added a second flat washer 184717 to the tensioner assembly. | ECN 60063 |
| | Added footnote to use one or two washers 184717 as required to align the belt drive. | ECN 60990 |
| | Added footnote to order latch 135815 until stock is depleted, then order latch assembly 320524. | ECN 64457 |
| *24 Carrier Frame Components, page 73* | Ball valve 247875 replaced by 238222. | ECN 61251 |
| *28 Hitch – Hydraulic/Electrical, page 83* | Replaced ball valve 247875 with 238222. Updated illustration from 1038125 to 1042639. | ECN 63686 |
| *30 Hitch Driveline – Service Parts, page 89* | Changed friction disc package 224446 description from "Pkg of 8" back to "Pkg of 4". They come from the supplier in packages of 8, but MacDon only sells them in fours, which is the number required per machine. | Parts |
| *37 (Option) Blade Update, page 107* | Added new section for Updated Blades kit 359122, with new illustration 1042193. | ECN 63542<br>ECN 64004 |
| *38 (Option) Drawbar Hitch (2018 and Prior), page 109* | Jack 259594 superseded by 259605. Updated illustration from 1040049 to 1042648. | ECN 64342 |
| *39 (Option) Drawbar Hitch (2019–2021), page 111* | Jack 259594 superseded by 259605. Updated illustration from 1040050 to 1042649. | ECN 64342 |
| *40 (Option) Drawbar Hitch (2022 and Later), page 115* | Jack 259594 superseded by 259605. Updated illustration from 1039967 to 1042650. | ECN 64342 |
| *43 (Option) Tractor Utility Hitch Adapter, page 123* | Jack 259594 superseded by 259605. | ECN 64342 |

Introduction ..... i
Abbreviations ..... ii
Serial Number Breaks ..... iii
Summary of Changes – R113/R116 (262306 Rev. A) ..... iv

**1 Cutterbar – Eight and Ten Disc (2015) ..... 1**
**2 Cutterbar – Eight and Ten Disc (2016 and Later) ..... 5**
**3 Cutterbar Components (Large Drum) – Eight and Ten Disc (2017 and Prior) ..... 9**
**4 Cutterbar Components (Small Drum) – Eight and Ten Disc (2018 and Later) ..... 13**
**5 Cutterbar Components – Eight and Ten Disc with Quick Change Blades ..... 17**
**6 Cutterbar – Disc Timing Tool ..... 21**
**7 Cutterbar to Frame (2017 and Prior) ..... 23**
**8 Cutterbar to Frame (2018 and Later) ..... 25**
**9 Mechanical Drives ..... 27**
**10 Cross Shaft Driveline – Service Parts ..... 31**
**11 T-Gearbox – Service Parts ..... 33**
**12 Drive and Swivel Gearbox – Service Parts ..... 35**
**13 Header Shields ..... 37**
**14 Roll Conditioner – Polyurethane/Steel (2015) ..... 41**
**15 Roll Conditioner – Polyurethane/Steel (2016 and Later) ..... 45**
**16 Roll Conditioner – Roll Arms and Stops ..... 51**
**17 Roll Conditioner – Gear Drive Service Parts ..... 53**
**18 Roll Conditioner – Shields ..... 55**
**19 Roll Conditioner – Header Attachment ..... 57**
**20 Finger Conditioner ..... 61**
**21 Finger Conditioner – Shields ..... 65**
**22 Finger Conditioner – Header Attachment ..... 67**
**23 No Conditioner Option – Shields ..... 71**
**24 Carrier Frame Components ..... 73**
**25 Carrier Wheels ..... 77**
**26 Carrier to Header Connections ..... 79**
**27 Hitch ..... 81**
**28 Hitch – Hydraulic/Electrical ..... 83**
**29 Hitch – Mechanical Drive ..... 87**
**30 Hitch Driveline – Service Parts ..... 89**
**31 Front Half Drivelines ..... 93**
**32 Decals and Reflectors ..... 95**
**33 Decals – Product Identification ..... 99**
**34 Paint ..... 101**
**35 Tool Operated Latches – Export Only ..... 103**
**36 (Option) Blade Lowering Kit ..... 105**
**37 (Option) Blade Update ..... 107**
**38 (Option) Drawbar Hitch (2018 and Prior) ..... 109**
**39 (Option) Drawbar Hitch (2019–2021) ..... 111**

40 (Option) Drawbar Hitch (2022 and Later) ..... 115
41 (Option) Driveline Extension Kit (2017 and Prior) ..... 119
42 (Option) Driveline Extension Kit (2018 and Later) ..... 121
43 (Option) Tractor Utility Hitch Adapter ..... 123
44 (Option) Hydraulic Header Angle (2015) ..... 125
45 (Option) Hydraulic Header Angle (2016 and Later) ..... 127
46 (Option) Quick Change Blade Kit ..... 129
47 (Option) R1 Service Kit ..... 131
48 (Option) R116 Small Drum Kit ..... 133
49 (Option) Tall Crop Dividers ..... 135
50 (Option) Transport – Wheel Frame ..... 137
51 (Option) Transport – Deploy/Swing Mechanism (2015) ..... 141
52 (Option) Transport – Deploy/Swing Mechanism (2016–2017) ..... 145
53 (Option) Transport – Deploy/Swing Mechanism (2018 and Later) ..... 149
54 (Option) Transport – Alignment Mechanism (2015) ..... 153
55 (Option) Transport – Alignment Mechanism (2016 and Later) ..... 157
56 (Option) Transport – Swing Completion / Selector Valve (2015) ..... 161
57 (Option) Transport – Swing Completion / Selector Valve (2016–2018) ..... 163
58 (Option) Transport – Swing Completion / Selector Valve (2019 and Later) ..... 165
59 (Option) Transport – Tongue to Hitch Latch ..... 169
60 (Option) Two-Point Hitch Adapter (2018 and Prior) ..... 171
61 (Option) Two-Point Hitch Adapter (2019 and Later) ..... 173
Index ..... 176

# 1 Cutterbar – Eight and Ten Disc (2015)

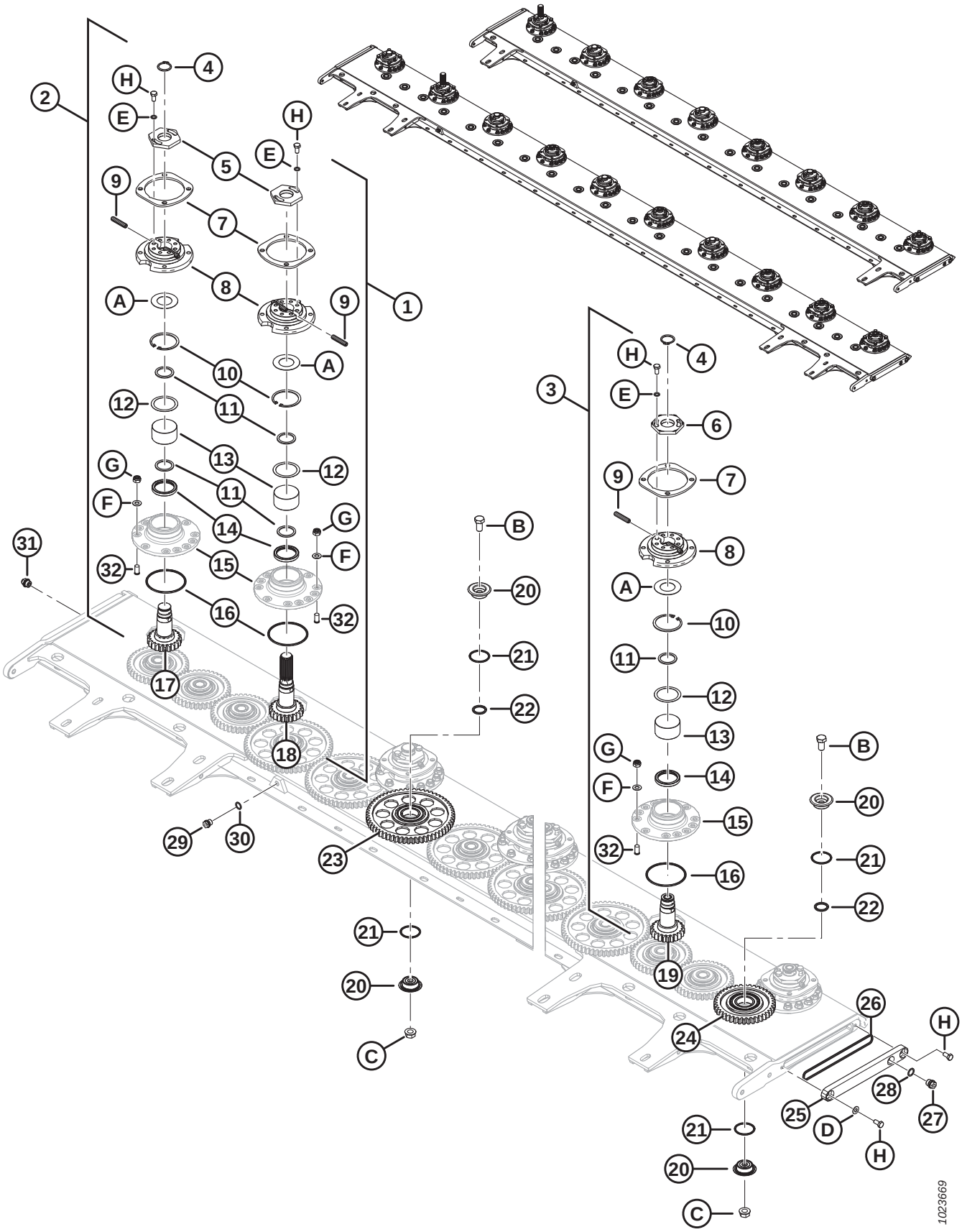

## CUTTERBAR – EIGHT AND TEN DISC (2015)

| Ref | Part Number | Description | 8/10 Disc Qty | Serial Number |
|---|---|---|---|---|
| 1 | 359040 | SPINDLE – DRIVE [1] | 1/1 | 266820–285419 |
| 2 | 359026 | SPINDLE – CLOCKWISE [1] | 3/4 | 266820–285419 |
| 3 | 359027 | SPINDLE – COUNTER CLOCKWISE [1] | 4/5 | 266820–285419 |
| 4 | 259048 | RING – RETAINING | 7/9 | 266820–285419 |
| 5 | 246612 | NUT – SPECIAL (RH THREAD) [2] | 4/5 | 266820–285419 |
| 6 | 246613 | NUT – SPECIAL (LH THREAD) [2] | 4/5 | 266820–285419 |
| 7 | 247616 | PLATE – SPACER | 8/10 | 266820–285419 |
| 8 | 246614 | HUB – SPINDLE | 8/10 | 266820–285419 |
| 9 | 246295 | PIN – SHEAR | 16/20 | 266820–285419 |
| 10 | 246617 | RING – SNAP | 8/10 | 266820–285419 |
| 11 | 246616 | SPACER (2015 ONLY) | 8/10 | 266820–285419 |
| 12 | 246618 | SHIM (2015 ONLY) | 8/10 | 266820–285419 |
| 13 | 246328 | BEARING – TAPER ROLLER | 8/10 | 266820–285419 |
| 14 | 246621 | SEAL (2015 ONLY) | 8/10 | 266820–285419 |
| 15 | NSS | HOUSING – BEARING [3] | | |
| 16 | 246316 | O-RING – SPINDLE | 8/10 | 266820–285419 |
| 17 | 281332 | GEAR – DRIVE, CLOCKWISE (RH THREAD, 2015 ONLY) [4] | 1/1 | 266820–285419 |
| 18 | 281331 | GEAR – CLOCKWISE (RH THREAD, 2015 ONLY) [4] | 3/4 | 266820–285419 |
| 19 | 281333 | GEAR – COUNTER CLOCKWISE (LH THREAD, 2015 ONLY) [5] | 4/5 | 266820–285419 |
| 20 | 246330 | PIN – IDLER GEAR | 32/40 | 266820–285419 |
| 21 | 246315 | O-RING – IDLER PIN | 32/40 | 266820–285419 |
| 22 | 246331 | O-RING – IDLER PIN | 16/20 | 266820–285419 |
| 23 | 246308 | GEAR – IDLER, LARGE, C/W BEARING [6] | 10/14 | 266820–285419 |
| 24 | 246307 | GEAR – IDLER, SMALL, C/W BEARING [6] | 6/6 | 266820–285419 |
| 25 | 246309 | PLATE – CUTTERBAR END | 2/2 | 266820–285419 |
| 26 | 247637 | O-RING – END PLATE, 170 X 5 MM (2015 ONLY) | 2/2 | 266820–285419 |
| 27 | 246631 | PLUG – SIDE, M18 X 1.5 | 1/1 | 266820–285419 |
| 28 | 246632 | GASKET | 1/1 | 266820–285419 |
| 29 | 246627 | PLUG | 1/1 | 266820–285419 |
| 30 | 246628 | GASKET | 1/1 | 266820–285419 |
| 31 | 246318 | BREATHER – CUTTERBAR | 1/1 | 266820–285419 |
| 32 | 246991 | STUD – M12 X 25 | 88/110 | 266820–285419 |
| | | | | |

1. Does not include spacer plate (MD #247616 or 247923), spindle O-ring (MD #246316), stud (MD #246991), or hardware (MD #246332, 246630).
2. Wrench (MD #246314) is attached to header, and used to loosen/tighten nut. For location of wrench, refer to Section *8 Cutterbar to Frame (2018 and Later), page 25*.
3. Not sold separately. Comes included with spindles (MD #246236, 246293, and 246294).
4. RH thread.
5. LH thread.
6. Includes bearing and snap ring. Bearing and snap ring not sold separately.

## CUTTERBAR – EIGHT AND TEN DISC (2015)

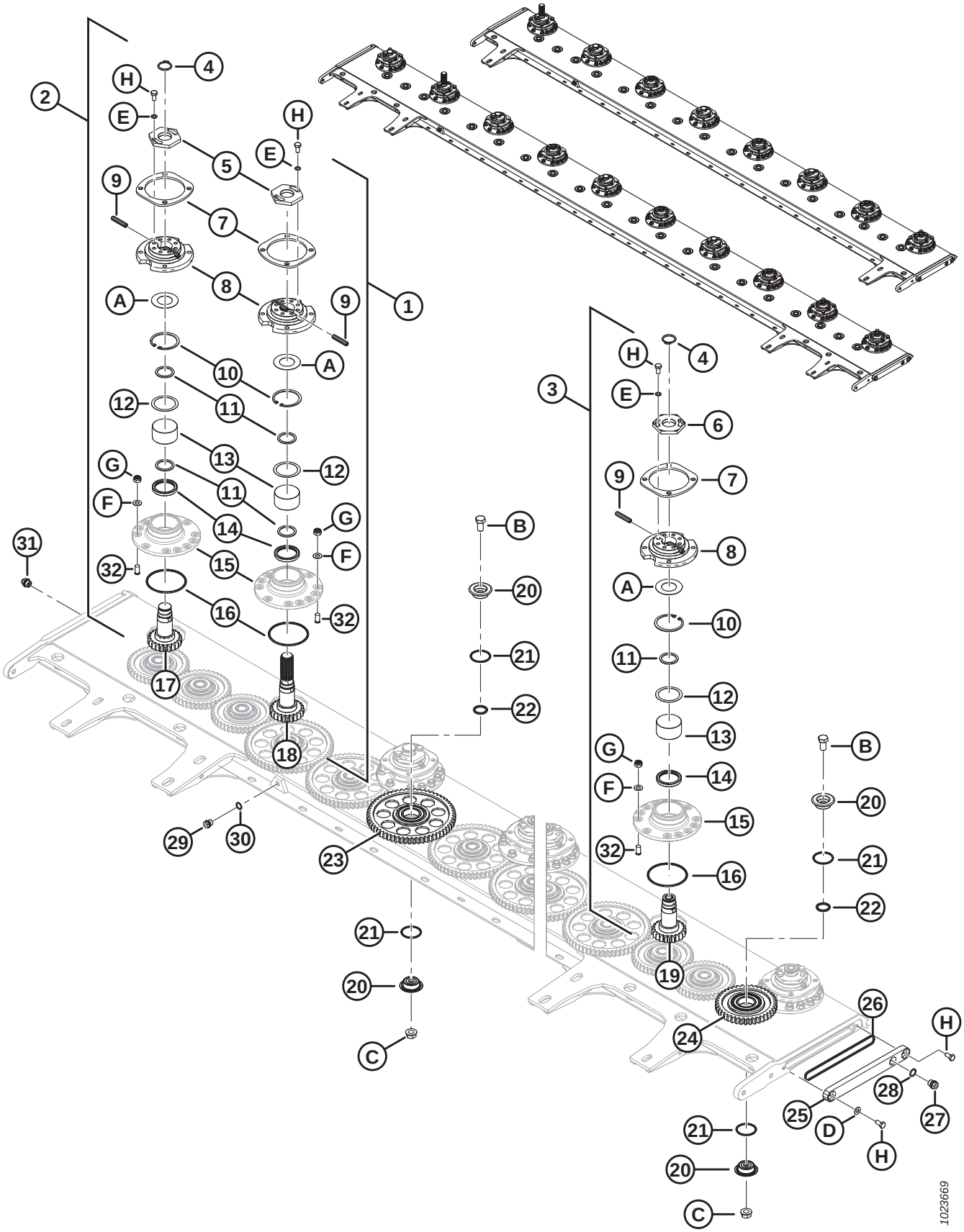

## CUTTERBAR – EIGHT AND TEN DISC (2015)

| Ref | Part Number | Description | 8/10 Disc Qty | Serial Number |
|---|---|---|---|---|
| A | 246615 | WASHER – SPECIAL, BELLEVILLE | | |
| B | 246310 | BOLT – M16, IDLER PIN | | |
| C | 246311 | NUT – IDLER PIN | | |
| D | 246313 | WASHER – END CAP | | |
| E | 246625 | WASHER – SPECIAL | | |
| F | 246630 | WASHER – SPECIAL | | |
| G | 246332 | NUT – M12, LOCKING | | |
| H | 246872 | BOLT – M10, SPECIAL | | |

# 2 Cutterbar – Eight and Ten Disc (2016 and Later)

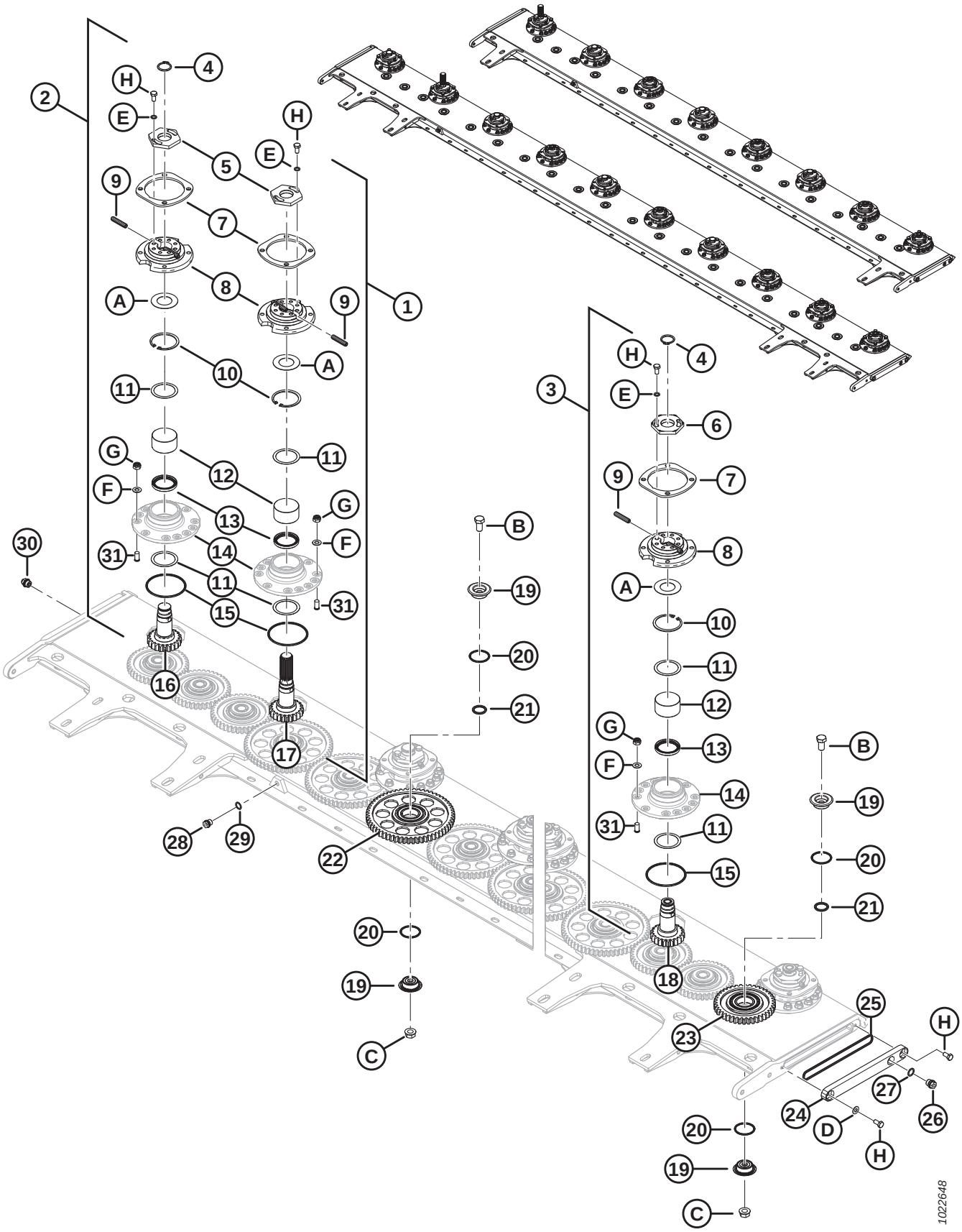

## CUTTERBAR – EIGHT AND TEN DISC (2016 AND LATER)

| Ref | Part Number | Description | 8/10 Disc Qty | Serial Number |
|---|---|---|---|---|
| 1 | 359040 | SPINDLE – DRIVE [7] | 1/1 | 285420– |
| 2 | 359026 | SPINDLE – CLOCKWISE [7] | 3/4 | 285420– |
| 3 | 359027 | SPINDLE – COUNTER CLOCKWISE [7] | 4/5 | 285420– |
| 4 | 259048 | RING – RETAINING | 7/9 | 285420– |
| 5 | 246612 | NUT – SPECIAL (RH THREAD) [8] | 4/5 | 285420– |
| 6 | 246613 | NUT – SPECIAL (LH THREAD) [8] | 4/5 | 285420– |
| 7 | 247923 | PLATE – SPACER | 8/10 | 285420– |
| 8 | 246614 | HUB – SPINDLE | 8/10 | 285420– |
| 9 | 246295 | PIN – SHEAR | 16/20 | 285420– |
| 10 | 246617 | RING – SNAP | 8/10 | 285420– |
| 11 | 247936 | SHIM | 8/10 | 285420– |
| 12 | 246328 | BEARING – TAPER ROLLER | 8/10 | 285420– |
| 13 | 247937 | SEAL | 8/10 | 285420– |
| 14 | NSS | HOUSING – BEARING [9] | | |
| 15 | 246316 | O-RING – SPINDLE | 8/10 | 285420– |
| 16 | 246623 | GEAR – CLOCKWISE (RH THREAD) [10] | 3/4 | 285420– |
| 17 | 246622 | GEAR – DRIVE, CLOCKWISE (RH THREAD) [10] | 1/1 | 285420– |
| 18 | 246624 | GEAR – COUNTER CLOCKWISE (LH THREAD) [11] | 4/5 | 285420– |
| 19 | 246330 | PIN – IDLER GEAR | 32/40 | 285420– |
| 20 | 246315 | O-RING – IDLER PIN | 32/40 | 285420– |
| 21 | 246331 | O-RING – IDLER PIN | 16/20 | 285420– |
| 22 | 246308 | GEAR – IDLER, LARGE, C/W BEARING [12] | 10/14 | 285420– |
| 23 | 246307 | GEAR – IDLER, SMALL, C/W BEARING [12] | 6/6 | 285420– |
| 24 | 307175 | PLATE – CUTTERBAR END [13] | 2/2 | 346190– |
| | 246309 | PLATE – CUTTERBAR END [14] | 2/2 | 285420–346189 |
| 25 | 247924 | O-RING – END PLATE, 170 X 4.5 MM | 2/2 | 285420– |
| 26 | 246631 | PLUG – SIDE, M18 X 1.5 | 1/1 | 285420– |
| 27 | 246632 | GASKET | 1/1 | 285420– |
| 28 | 246627 | PLUG | 1/1 | 285420– |
| 29 | 246628 | GASKET | 1/1 | 285420– |
| 30 | 246318 | BREATHER – CUTTERBAR | 1/1 | 285420– |

7. Does not include spacer plate (MD #247616 or 247923), spindle O-ring (MD #246316), stud (MD #246991), or hardware (MD #246332, 246630).
8. Wrench (MD #246314) is attached to header, and used to loosen/tighten nut. For location of wrench, refer to Section *8 Cutterbar to Frame (2018 and Later), page 25*.
9. Not sold separately. Comes included with spindles (MD #246236, 246293, and 246294).
10. RH thread.
11. LH thread.
12. Includes bearing and snap ring. Bearing and snap ring not sold separately.
13. For model year 2019 and later units.
14. For model year 2016–2018 units.

## CUTTERBAR – EIGHT AND TEN DISC (2016 AND LATER)

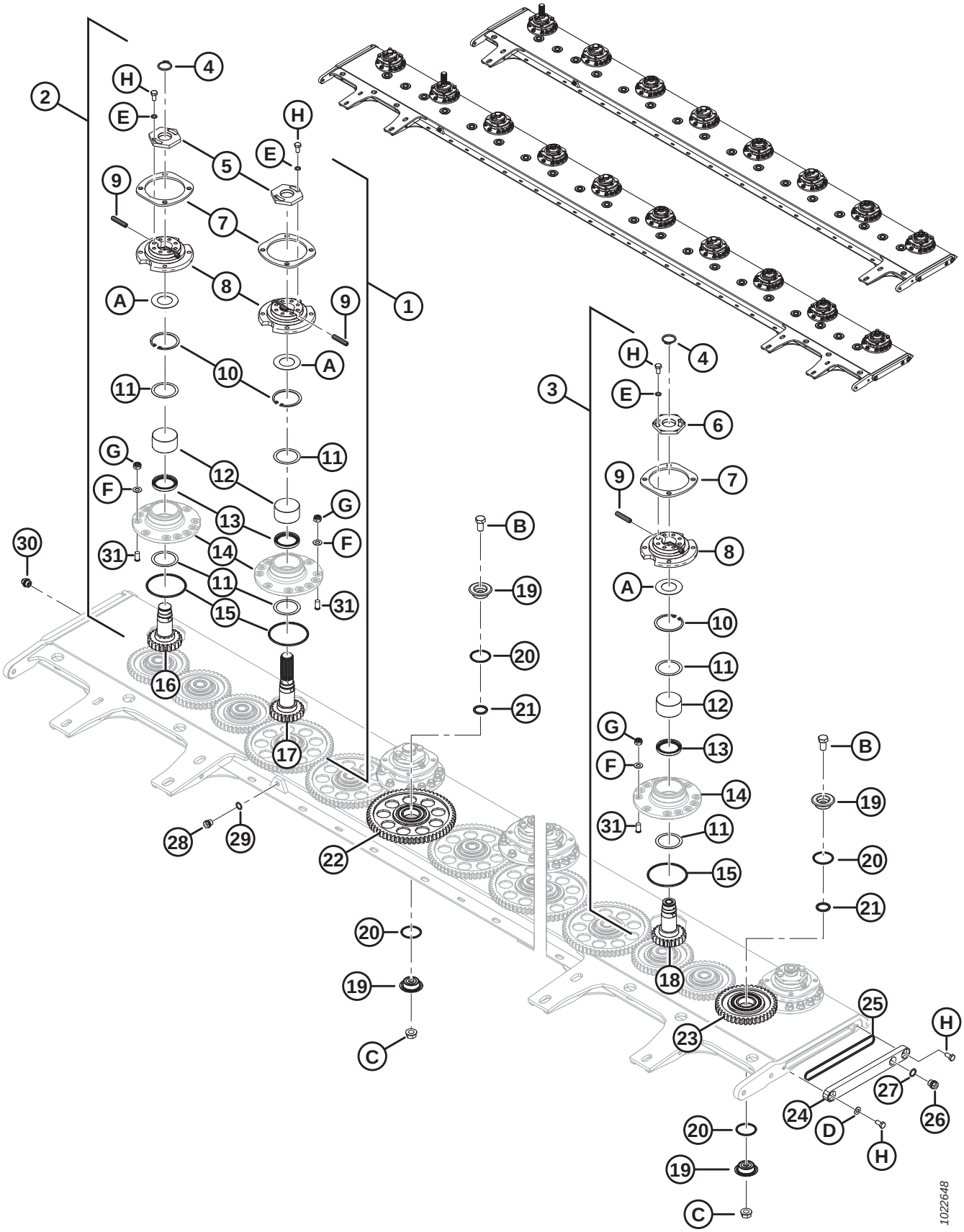

## CUTTERBAR – EIGHT AND TEN DISC (2016 AND LATER)

| Ref | Part Number | Description | 8/10 Disc Qty | Serial Number |
|---|---|---|---|---|
| 31 | 246991 | STUD – M12 X 25 | 88/110 | 285420– |
| | | | | |
| A | 246615 | WASHER – SPECIAL, BELLEVILLE | | |
| B | 246310 | BOLT – M16, IDLER PIN | | |
| C | 246311 | NUT – IDLER PIN | | |
| D | 238016 | WASHER – END CAP [13] | | 346190– |
| | 246313 | WASHER – END CAP [14] | | 285420–346189 |
| E | 246625 | WASHER – SPECIAL | | |
| F | 246630 | WASHER – SPECIAL | | |
| G | 246332 | NUT – M12, LOCKING | | |
| H | 238015 | BOLT – M12, SPECIAL [13] | | 346190– |
| | 246872 | BOLT – M10, SPECIAL [14] | | 285420–346189 |

# 3 Cutterbar Components (Large Drum) – Eight and Ten Disc (2017 and Prior)

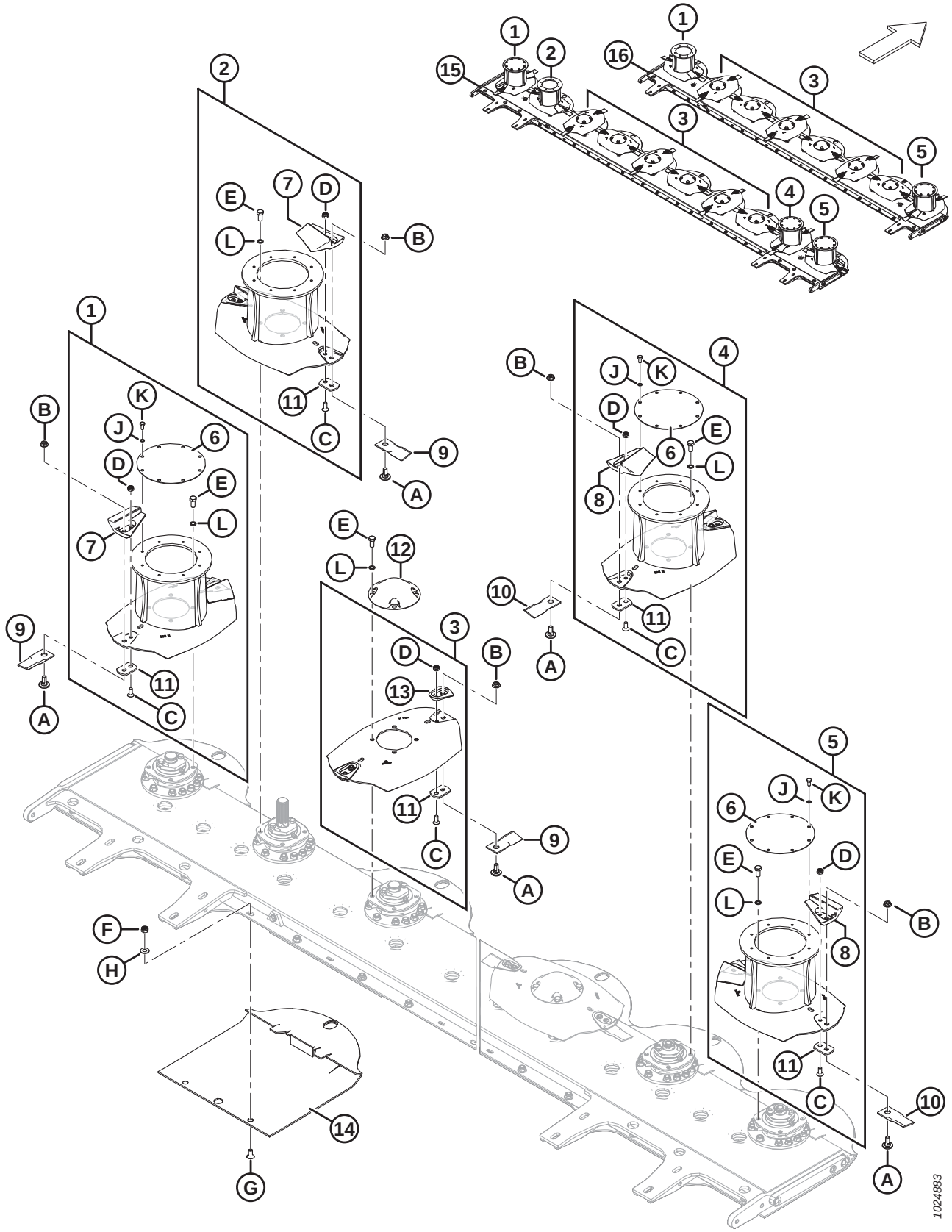

**IMPORTANT:**

All cutting components, blades, and hardware should be replaced in pairs to maintain balance. Avoid mixing blades from different model years. 5 mm blade plate (MD #246301) requires accelerator bolt (MD #281965) and blade bolt (MD #246299). If Blade Lowering kit (MD #257123) or R116 small drum kit (MD #259140) has been installed, refer to Section *4 Cutterbar Components (Small Drum) – Eight and Ten Disc (2018 and Later), page 13* for parts.

**NOTE:**

Kits available for blade lowering and converting to small drums. Refer to Sections *36 (Option) Blade Lowering Kit, page 105* or *48 (Option) R116 Small Drum Kit, page 133*.

| Ref | Part Number | Description | 8/10 Disc Qty | Serial Number |
|---|---|---|---|---|
| 1 | 247242 | ASSEMBLY – CW DRUM, 402 MM [15] | 1/1 | –321189 |
| 2 | 247239 | ASSEMBLY – CW DRUM, 425 MM (DRIVE) [16] | 0/1 | –321189 |
| 3 | 247950 | ASSEMBLY – DISC, 425 MM [16] | 6/6 | –321189 |
| 4 | 247240 | ASSEMBLY – CCW DRUM, 425 MM [16] | 0/1 | –321189 |
| 5 | 247243 | ASSEMBLY – CCW DRUM, 402 MM [16] | 1/1 | –321189 |
| 6 | 246291 | PLATE – DRUM COVER | 1/3 | –321189 |
| 7 | 281966 | ACCELERATOR – CW (PAIR) | 2/4 | –321189 |
| 8 | 281967 | ACCELERATOR – CCW (PAIR) | 2/4 | –321189 |
| 9 | 281446 | BLADE – 11° CW BEVEL DOWN (QTY 6) | 2/2 | –321189 |
| 10 | 281447 | BLADE – 11° CCW BEVEL DOWN (QTY 6) | 2/2 | –321189 |
| 11 | 246301 | PLATE – BLADE, 5 MM | 16/20 | –321189 |
| 12 | 246305 | COVER – DISC | 6/6 | –321189 |
| 13 | 238227 | KIT – 2 GUARDS C/W HARDWARE [17] | 6/6 | –321189 |
| 14 | 281609 | ROCKGUARD | 8/10 | –321189 |
| | **359024** | **ROCKGUARD (LIGHT CROP – FLAT TOP)** [18] | **OPT** | |
| 15 | 259517 | KIT – CUTTERBAR 10 DISC [19, 20] | 0/1 | –321189 |
| 16 | 259416 | KIT – CUTTERBAR 8 DISC [21] | 1/0 | –321189 |
| | | | | |
| A | 246299 | BOLT – BLADE | | |
| B | 246300 | NUT – BLADE | | |
| C | 281965 | BOLT – ACCELERATOR | | |

15. Does not include blades (MD #281446, 281447) or blade hardware (MD #246299, 246300). Drum assembly will come with a top cover plate for use on the R116. Cover will need to be removed for the R113.
16. Does not include blades (MD #281446, 281447) or blade hardware (MD #246299, 246300).
17. This kit includes a matched pair of disc guards (NSS), two accelerator bolts (MD #281965), two accelerator nuts (MD #246303), and two accelerator bolts (MD #281605).
18. The optional rockguard has a flat top, which improves header performance when cutting in lighter crop.
19. Cutterbar kit MD #259517 is used for units made in model year 2020 and prior. 10-disc cutterbar kit has small drums installed. When replacing large drum cutterbar on model year 2017 and prior units, the following small drum shielding parts are also required: MD #281497 (x2), 281981, 281493, 281500, 281501, 281489. Refer to Section *9 Mechanical Drives, page 27*.
20. Kit comes with Drive Alignment Tool (MD #325683). MD #256192 and 256199 are required when ordering replacement part for 2015 units with roll conditioner.
21. Kit comes with Drive Alignment Tool (MD #307769). MD #256192 and 256199 are required when ordering replacement part for 2015 units with roll conditioner.

## CUTTERBAR COMPONENTS (LARGE DRUM) – EIGHT AND TEN DISC (2017 AND PRIOR)

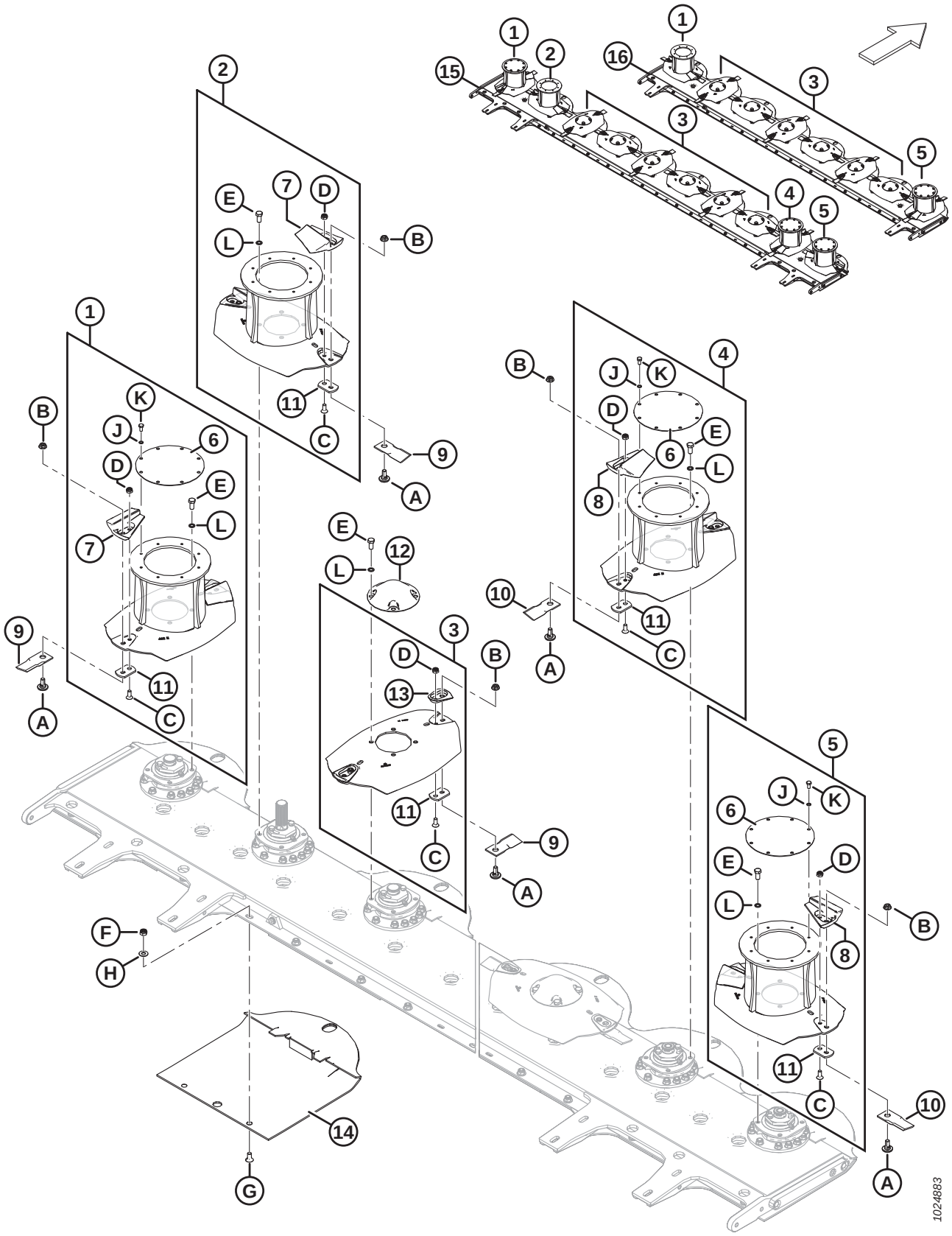

## CUTTERBAR COMPONENTS (LARGE DRUM) – EIGHT AND TEN DISC (2017 AND PRIOR)

| Ref | Part Number | Description | 8/10 Disc Qty | Serial Number |
|---|---|---|---|---|
| D | 246303 | NUT – ACCELERATOR | | |
| E | 246312 | BOLT – M12, DISC COVER | | |
| F | 246332 | NUT – M12, LOCKING | | |
| G | 259099 | BOLT – COUNTERSUNK | | |
| H | 259100 | WASHER – M12, LOCKING | | |
| J | 246633 | WASHER – SPECIAL, M8 | | |
| K | 246882 | BOLT – M8, SPECIAL | | |
| L | 246952 | WASHER – M12, LOCKING, DISC | | |

# 4 Cutterbar Components (Small Drum) – Eight and Ten Disc (2018 and Later)

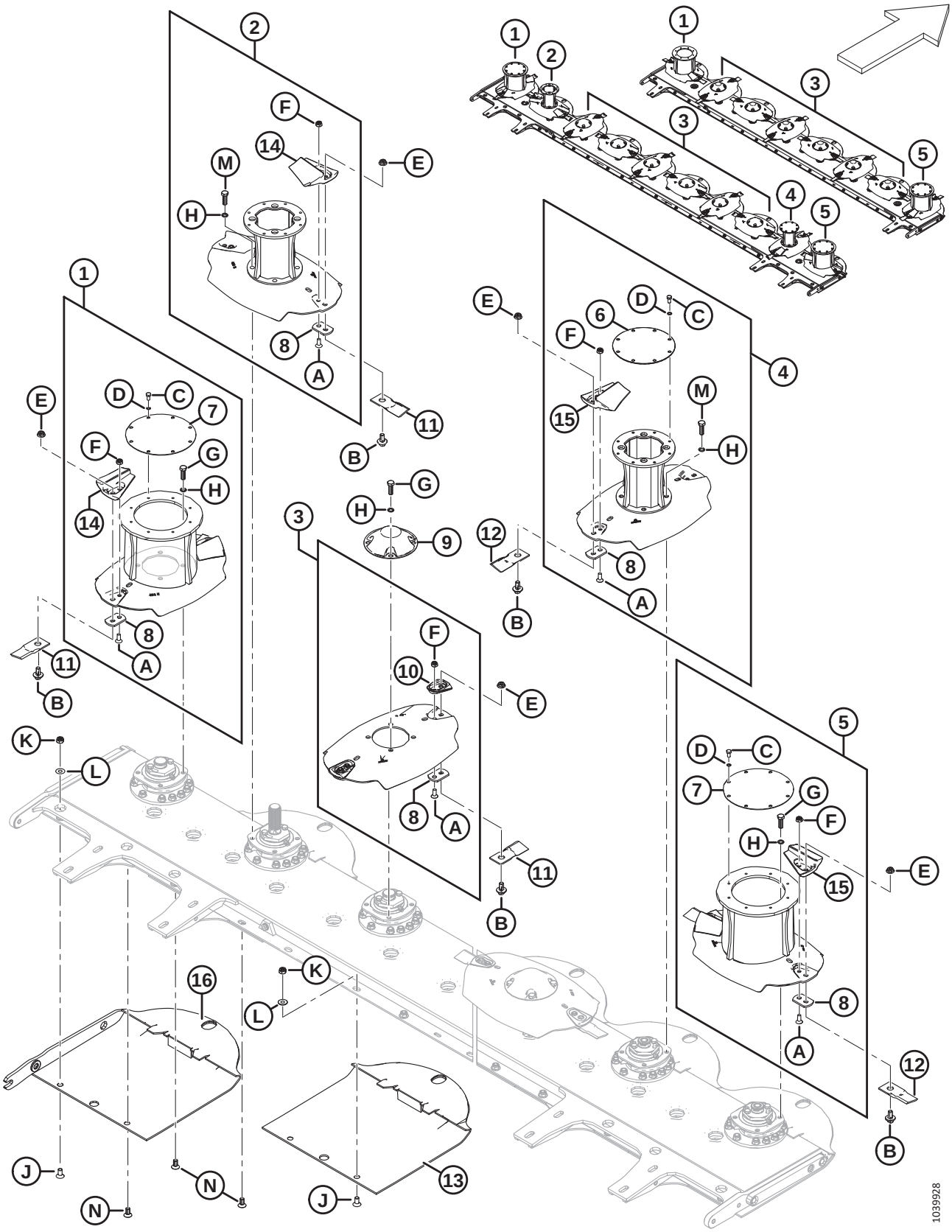

**IMPORTANT:**

All cutting components, blades, and hardware should be replaced in pairs to maintain balance. Avoid mixing blades from different model years. 10 mm blade plate (MD #281606) requires accelerator bolt (MD #281605) and blade bolt (MD #281604).

| Ref | Part Number | Description | 8/10 Disc Qty | Serial Number |
|---|---|---|---|---|
| | 259517 | KIT – CUTTERBAR 10 DISC (2020 AND PRIOR) [22] | 0/1 | 321190–396189 |
| | 238195 | KIT – CUTTERBAR 10 DISC (2021 AND LATER) [23] | 0/1 | 396190– |
| | 259416 | KIT – CUTTERBAR 8 DISC (2020 AND PRIOR) [24] | 1/0 | 321190–396189 |
| | 259518 | KIT – CUTTERBAR 8 DISC (2021 AND LATER) [25] | 1/0 | 396190– |
| | | | | |
| 1 | 281366 | ASSEMBLY – CW DRUM, 402 MM [26] | 1/1 | 321190– |
| 2 | 257085 | ASSEMBLY – CW DRUM, 425 MM DRIVE [27] | 0/1 | 321190– |
| 3 | 281370 | ASSEMBLY – DISC, 425 MM [27] | 6/6 | 321190– |
| 4 | 257086 | ASSEMBLY – CCW DRUM, 425 MM [27] | 0/1 | 321190– |
| 5 | 281367 | ASSEMBLY – CCW DRUM, 402 MM [27] | 1/1 | 321190– |
| 6 | 280504 | PLATE – DRUM COVER | 0/1 | 321190– |
| 7 | 246291 | PLATE – DRUM COVER | 1/2 | 321190– |
| 8 | 281606 | PLATE – BLADE, 10 MM | 16/20 | 321190– |
| 9 | 246305 | COVER – DISC | 6/6 | 321190– |
| 10 | 238227 | KIT – 2 GUARDS C/W HARDWARE [28] | 12/12 | 321190– |
| 11 | 259199 | BLADE – 18° CW BEVEL DOWN (QTY 6) | 2/2 | 321190– |
| | **359122** | **KIT – UPDATED BLADES** [29] | **OPT** | |
| 12 | 259200 | BLADE – 18° CCW BEVEL DOWN (QTY 6) | 2/2 | 321190– |
| | **359122** | **KIT – UPDATED BLADES** [29] | **OPT** | |

22. Cutterbar kit MD #259517 is used for units made in model year 2020 and prior. Kit comes with Drive Alignment Tool (MD #325683). 10-disc cutterbar kit has small drums installed. If replacing large drum cutterbar on model year 2017 and prior units, the following small drum shielding parts are also required: MD #281497 (x2), 281981, 281493, 281500, 281501, 281489. Refer to Section *9 Mechanical Drives, page 27*.
23. Cutterbar kit MD #238195 used for units made in model year 2021 and later. Kit comes with Drive Alignment Tool (MD #325683). 10-disc cutterbar kit has small drums installed. If replacing large drum cutterbar on model year 2017 and prior units, the following small drum shielding parts are also required: MD #281497 (x2), 281981, 281493, 281500, 281501, 281489. Refer to Section *9 Mechanical Drives, page 27*.
24. Cutterbar kit MD #259416 used for units made in model year 2020 and prior. Kit comes with Drive Alignment Tool (MD #307769).
25. Cutterbar kit MD #259518 used for units made in model year 2021 and later. Kit comes with Drive Alignment Tool (MD #325683).
26. Does not include blades (MD #259199, 259200) or blade hardware (MD #281604, 246300). Drum assembly will come with a top cover plate for use on the R116. Cover will need to be removed for the R113.
27. Does not include blades (MD #259199, 259200) or blade hardware (MD #281604, 246300).
28. This kit includes a matched pair of disc guards (NSS), two accelerator bolts (MD #281965), two accelerator nuts (MD #246303), and two accelerator bolts (MD #281605).
29. The blades included in this kit have a larger cut length, providing a cleaner cut in lighter crops. For service parts, refer to Section *37 (Option) Blade Update, page 107*.

## CUTTERBAR COMPONENTS (SMALL DRUM) – EIGHT AND TEN DISC (2018 AND LATER)

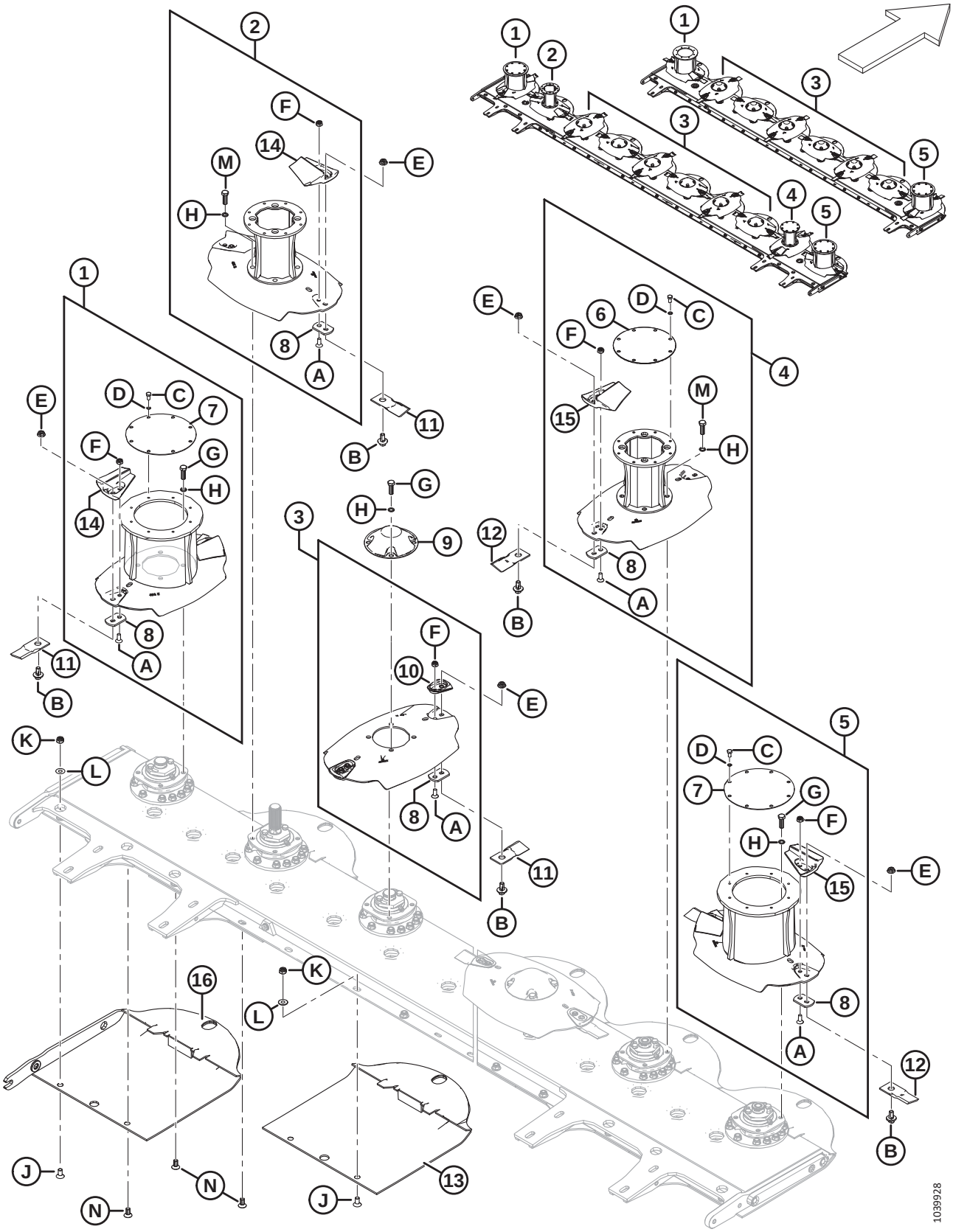

## CUTTERBAR COMPONENTS (SMALL DRUM) – EIGHT AND TEN DISC (2018 AND LATER)

| Ref | Part Number | Description | 8/10 Disc Qty | Serial Number |
|---|---|---|---|---|
| 13 | 281609 | ROCKGUARD | 6/8 | 321190– |
| | **359024** | **ROCKGUARD (LIGHT CROP – FLAT TOP)** [30] | **OPT** | |
| 14 | 281966 | ACCELERATOR – CW (PAIR) | 2/4 | 321190– |
| 15 | 281967 | ACCELERATOR – CCW (PAIR) | 2/4 | 321190– |
| 16 | 238031 | ROCKGUARD – REINFORCED, LH | 1/1 | 321190– |
| | 238032 | ROCKGUARD – REINFORCED, RH | 1/1 | 321190– |
| | 238026 | KIT – REINFORCED ROCKGUARD [31] | A/R | 321190– |
| | | | | |
| A | 281605 | BOLT – ACCELERATOR | | |
| B | 281604 | BOLT – BLADE | | |
| C | 246882 | BOLT – HEX HEAD M8 SPECIAL | | |
| D | 246633 | WASHER – SPECIAL M8 ZN PL | | |
| E | 246300 | NUT – BLADE | | |
| F | 246303 | NUT – ACCELERATOR | | |
| G | 246312 | BOLT – M12 DISC COVER | | |
| H | 246952 | WASHER – M12 LOCKING DISC | | |
| J | 259099 | BOLT – COUNTERSUNK (30 MM) | | |
| K | 246332 | NUT – NYLON INSERT LOCK M12 X 1.75 ZN PL CL-10 | | |
| L | 259100 | WASHER – M12 LOCKING | | |
| M | 281697 | BOLT – M12 DISC | | |
| N | 338800 | BOLT – FLAT CSK (25 MM) [32] | | |

30. The optional rockguard has a flat top, which improves header performance when cutting in lighter crop.
31. Kit includes LH and RH reinforced rockguards (MD #238031 and 238032), lower gearbox mount bracket (MD #238054), and hardware (MD #184681 and 136141).
32. 25 mm countersunk bolts (MD #338800) are used at the second, third, and fourth rockguard bolt locations from the outboard ends of 10-disc cutterbars only; 30 mm countersunk bolts (MD #259099) are used at all other rockguard bolt locations.

# 5 Cutterbar Components – Eight and Ten Disc with Quick Change Blades

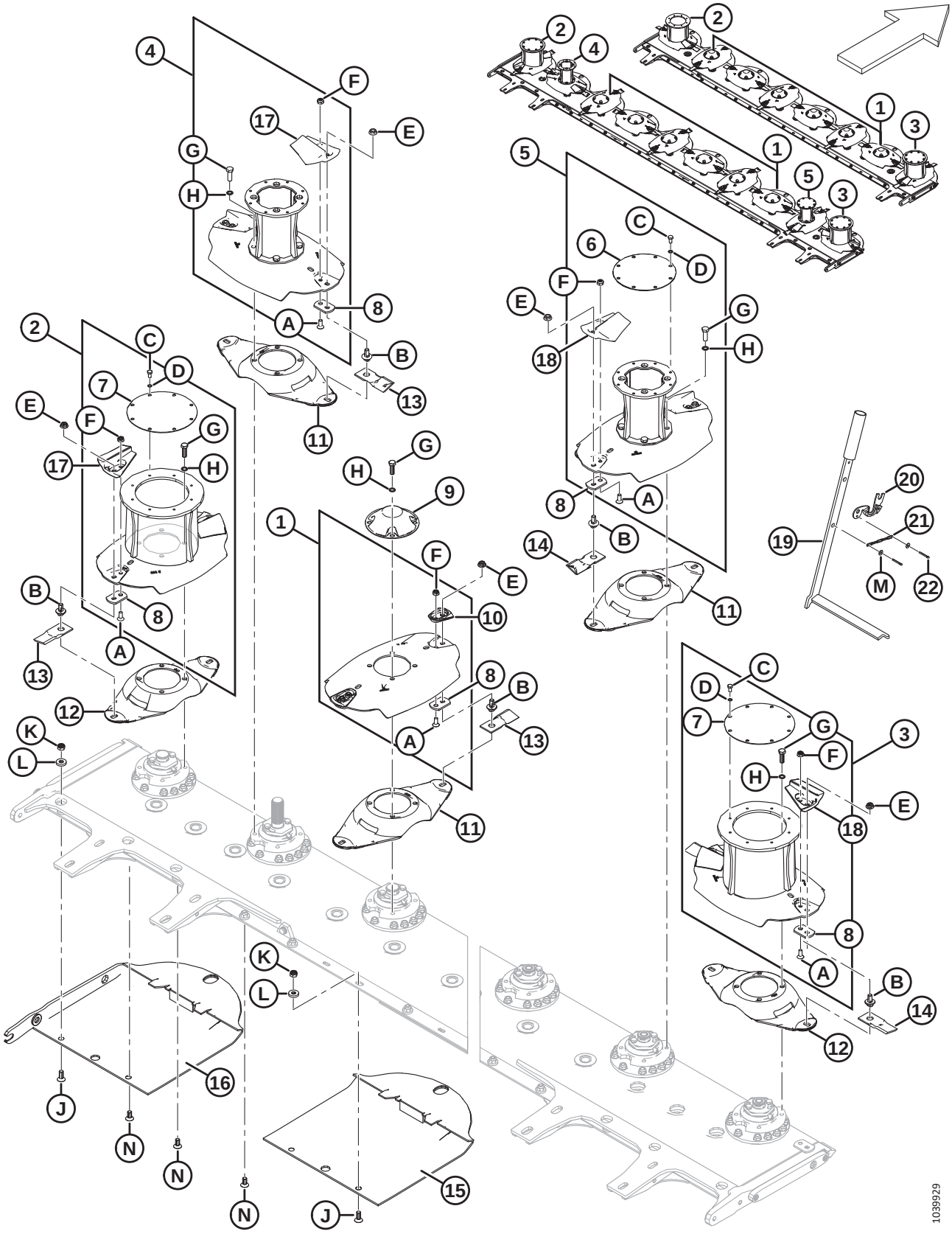

## CUTTERBAR COMPONENTS – EIGHT AND TEN DISC WITH QUICK CHANGE BLADES

| Ref | Part Number | Description | 8/10 Disc Qty | Serial Number |
|---|---|---|---|---|
| 1 | 281753 | ASSEMBLY – DISC, 425 MM [33] | 6/6 | |
| 2 | 281865 | ASSEMBLY – CW DRUM, 402 MM [33] | 1/1 | |
| 3 | 281866 | ASSEMBLY – CCW DRUM, 402 MM [33] | 1/1 | |
| 4 | 257085 | ASSEMBLY – CW DRUM, 425 MM DRIVE [33] | 0/1 | |
| 5 | 257086 | ASSEMBLY – CCW DRUM, 425 MM [33] | 0/1 | |
| 6 | 280504 | PLATE – DRUM COVER | 0/1 | |
| 7 | 246291 | PLATE – DRUM COVER | 1/2 | |
| 8 | 246301 | PLATE – BLADE, 5 MM | 16/20 | |
| 9 | 246305 | COVER – DISC | 6/6 | |
| 10 | 238227 | KIT – 2 GUARDS C/W HARDWARE [34] | 6/6 | |
| 11 | 281364 | PLATE – QUICK CHANGE, 425MM | 6/8 | |
| 12 | 281365 | PLATE – QUICK CHANGE, 402MM | 2/2 | |
| 13 | 259199 | BLADE – 18° DEG CW BEVEL DOWN (QTY 6) | A/R | |
| 14 | 259200 | BLADE – 18° CCW BEVEL DOWN (QTY 6) | A/R | |
| 15 | 281609 | ROCKGUARD | 6/8 | |
| | **359024** | **ROCKGUARD (LIGHT CROP – FLAT TOP)** [35] | **OPT** | |
| 16 | 238031 | ROCKGUARD – REINFORCED, LH | 1/1 | |
| | 238032 | ROCKGUARD – REINFORCED, RH | 1/1 | |
| 17 | 281966 | ACCELERATOR – CW (PAIR) | 1/2 | |
| 18 | 281967 | ACCELERATOR – CCW (PAIR) | 1/2 | |
| 19 | 281362 | TOOL – BLADE CHANGE | 1/1 | |
| 20 | 281755 | GAUGE – QUICK CHANGE | 1/1 | |
| 21 | 259113 | CHAIN – QUICK CHANGE | 1/1 | |
| 22 | 259117 | PIN – COTTER | 2/2 | |
| | | | | |
| A | 281965 | BOLT – ACCELERATOR | | |
| B | 281363 | BOLT – BLADE, QUICK CHANGE | | |
| C | 246882 | BOLT – M8 SPECIAL | | |
| D | 246633 | WASHER – SPECIAL M8 | | |
| E | 246300 | NUT – BLADE | | |
| F | 246303 | NUT – ACCELERATOR | | |
| G | 281697 | BOLT – M12 DISC COVER | | |
| H | 246952 | WASHER – M12 LOCKING DISC | | |
| J | 259099 | BOLT – COUNTERSUNK (30 MM) | | |
| K | 246332 | NUT – M12 LOCKING | | |
| L | 259100 | WASHER – M12 LOCKING | | |

33. Does not include blades (MD #259199, 259200) or hardware (MD #281363).
34. This kit includes a matched pair of disc guards (NSS), two accelerator bolts (MD #281965), two accelerator nuts (MD #246303), and two accelerator bolts (MD #281605).
35. The optional rockguard has a flat top, which improves header performance when cutting in lighter crop.

## CUTTERBAR COMPONENTS – EIGHT AND TEN DISC WITH QUICK CHANGE BLADES

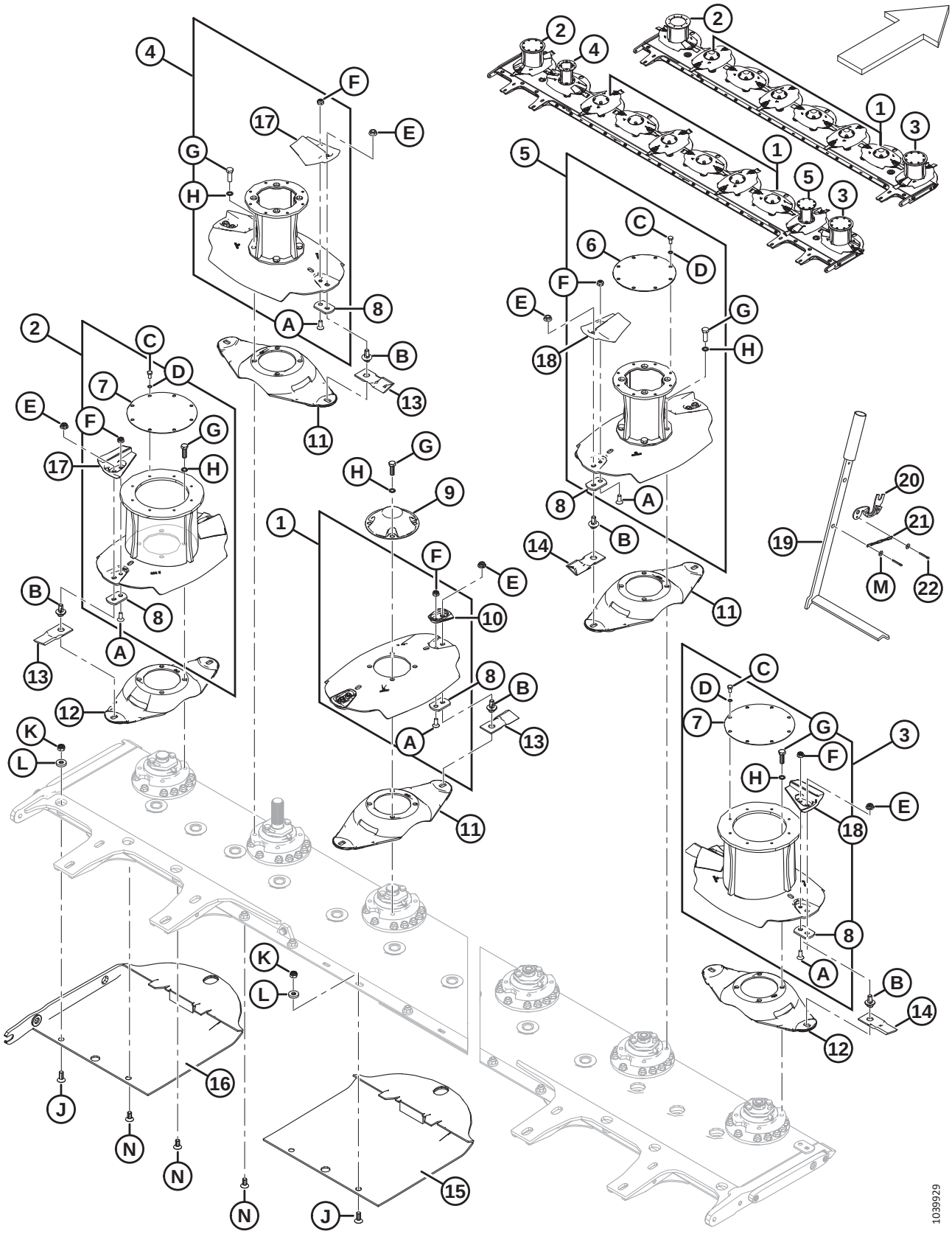

| Ref | Part Number | Description | 8/10 Disc Qty | Serial Number |
|---|---|---|---|---|
| M | 184701 | WASHER – FLAT LARGE | | |
| N | 338800 | BOLT – FLAT CSK (25 MM) [36] | | |

36. 25 mm countersunk bolts (MD #338800) are used at the second, third, and fourth rockguard bolt locations from the outboard ends of 10-disc cutterbars only; 30 mm countersunk bolts (MD #259099) are used at all other rockguard bolt locations.

# 6 Cutterbar – Disc Timing Tool

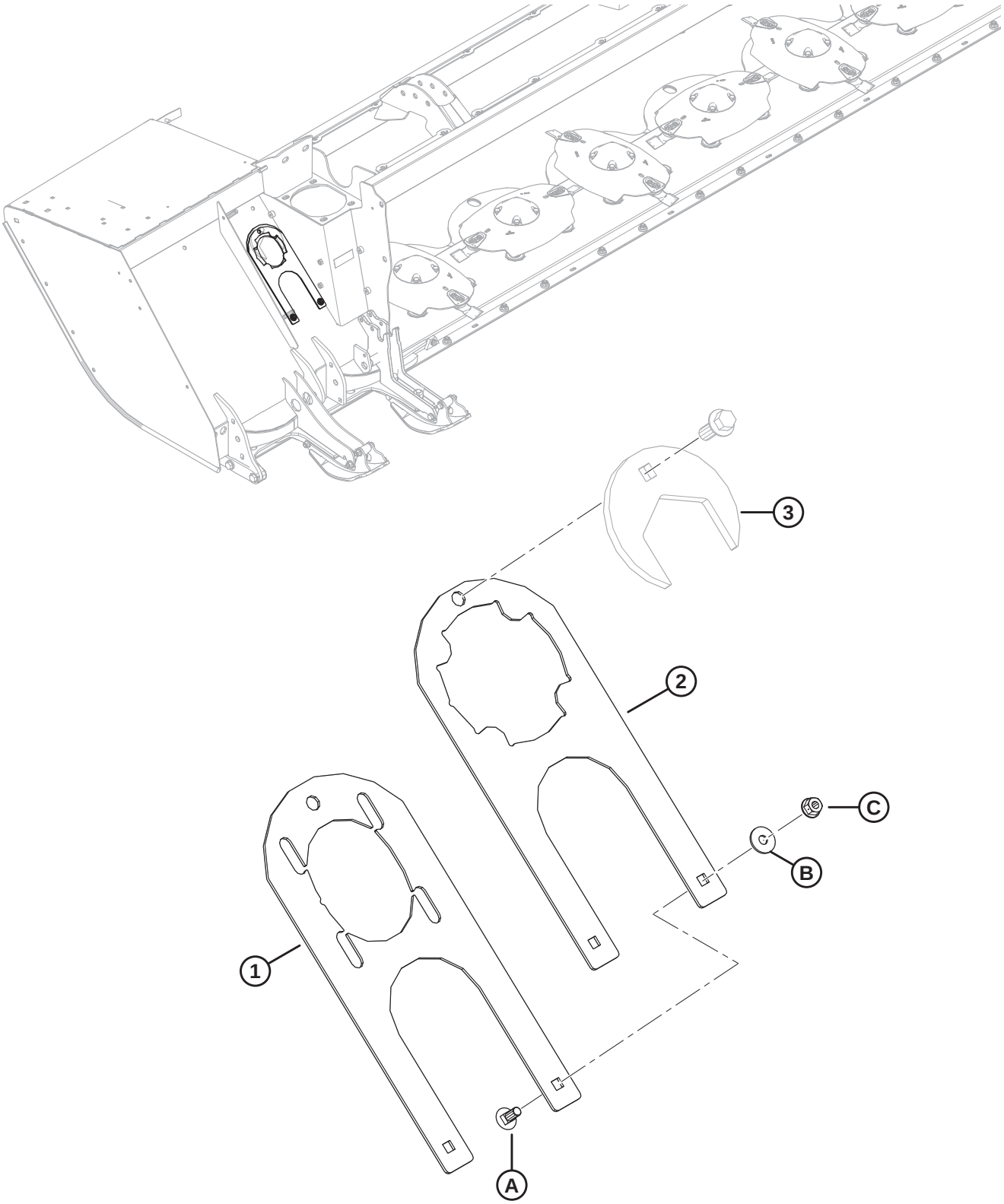


1042647

## CUTTERBAR – DISC TIMING TOOL

| Ref | Part Number | Description | Qty | Serial Number |
|---|---|---|---|---|
| 1 | **239049** | **TOOL – DISC TIMING 1** | **1** | |
| 2 | **338995** | **TOOL – DISC TIMING 2** | **1** | |
| 3 | **REF** | **WRENCH – SAFECUT NUT** [37] | **1** | |
| | | | | |
| A | **197171** | **BOLT – RHSN M8 X 1.25 X 20-8.8-ZINC** | | |
| B | **184709** | **WASHER – FLAT LARGE** | | |
| C | **135337** | **NUT – HEX FLG CTR LK M8 X 1.25-8-AA1J** | | |

37. Refer to Section *7 Cutterbar to Frame (2017 and Prior), page 23* or Section *8 Cutterbar to Frame (2018 and Later), page 25*.

# 7 Cutterbar to Frame (2017 and Prior)

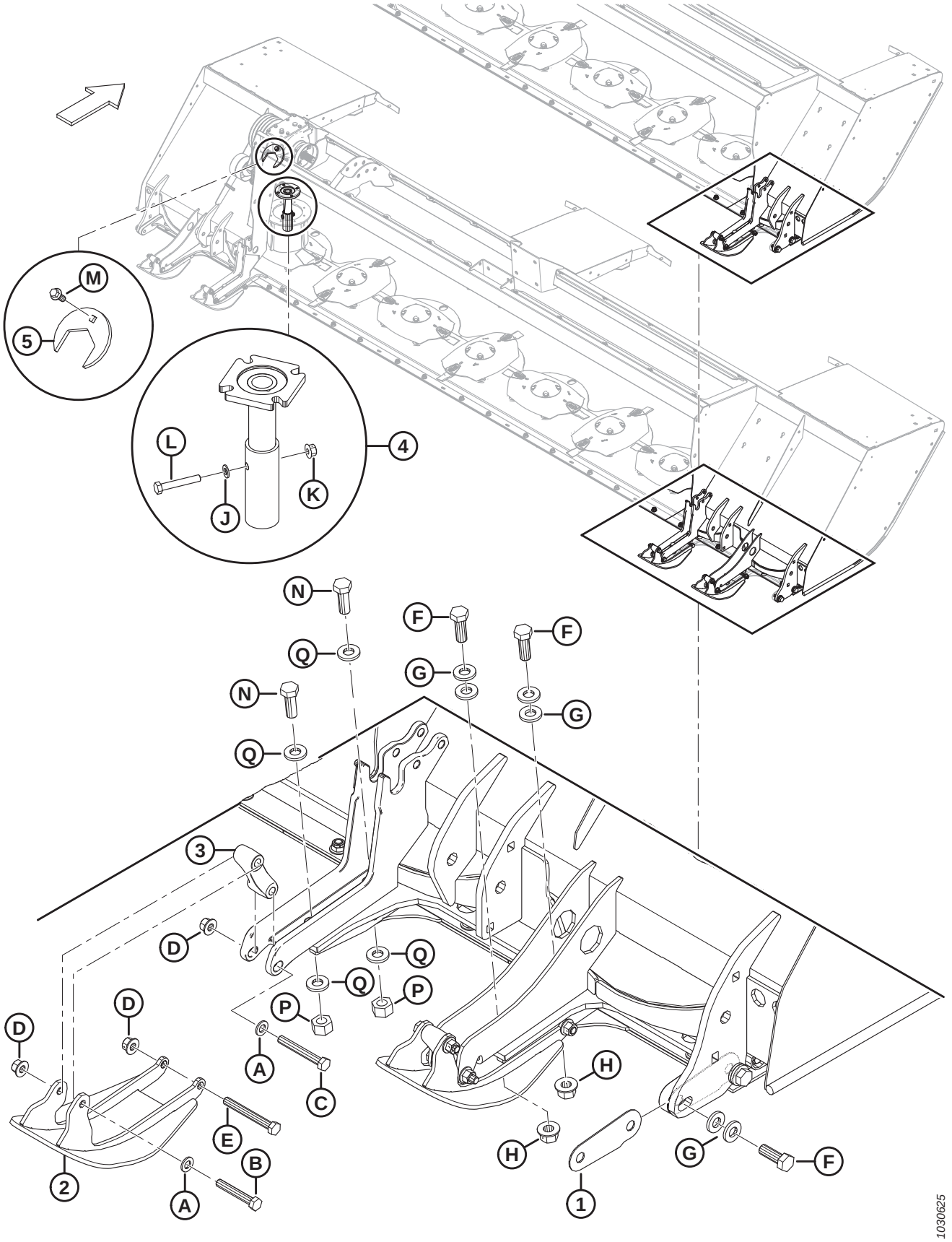

## CUTTERBAR TO FRAME (2017 AND PRIOR)

| Ref | Part Number | Description | 8/10 Disc Qty | Serial Number |
|---|---|---|---|---|
| 1 | 247206 | SHIM – CUTTERBAR [38] | A/R | –321189 |
| 2 | 257096 | SHOE – WELDMENT | 2/4 | –321189 |
| 3 | 238147 | LINK – CAST | 2/4 | –321189 |
| 4 | 325683 | ASSEMBLY – TOOL, DRIVE ALIGNMENT [39] | A/R | –321189 |
| 5 | 246314 | WRENCH – SAFECUT NUT [40] | 1/1 | –321189 |
| | | | | |
| A | 184714 | WASHER – FLAT REG M12-300HV-A3L | | |
| B | 135155 | BOLT – HEX HD M12 X 1.75 X 75-8.8-A3L | | |
| C | 184673 | BOLT – HEX HD M12 X 1.75 X 90-10.9-A3L | | |
| D | 136431 | NUT – HEX FLG CTR LOC M12 X 1.75-10-A3L | | |
| E | 184672 | BOLT – HEX HD M12 X 1.75 X 100-10.9-A3L | | |
| F | 136132 | BOLT – HEX HD TFL M16 X 2 X 45-8.8-A3L | | |
| G | 320226 | WASHER – HARD M16-300HV-ZINC | | |
| H | 136440 | NUT – HEX FLG CTR LOC M16 X 2-10-A3L | | |
| J | 184711 | WASHER – FLAT REG M10-200HV-A3L | | |
| K | 135799 | NUT – HEX FLG CTR LOC M10 X 1.5-10-A3L | | |
| L | 108172 | BOLT – HEX HD M10 X 1.5 X 65-8.8-A3L | | |
| M | 148798 | BOLT – HEX FLG HD M12 X 1.75 X 30-10.9-A3L | | |
| N | 136082 | BOLT – HEX HD TFL M20 X 2.5 X 50-8.8-A3L | | |
| P | 136124 | NUT – HEX M20 X 2.5-10-A3L (2016 AND LATER) | | |
| Q | 320225 | WASHER – HARD M20-300HV-ZINC | | |

38. Shim both sides of the header evenly as required to a maximum gap of 2 mm per side before tightening the bolts.
39. T-gearbox hub and cutterbar drive shaft to be aligned to +/– 3.2 mm or 1/8 in. Use tool (MD #325683) to achieve proper alignment. Assembly includes hardware (MD #184711, 135799, 108172). Tool (MD #325683) not supplied with header.
40. Wrench is attached to header. Used to loosen/tighten special nut (MD #246612, 246613). Refer to Section *2 Cutterbar – Eight and Ten Disc (2016 and Later), page 5*.

# 8 Cutterbar to Frame (2018 and Later)

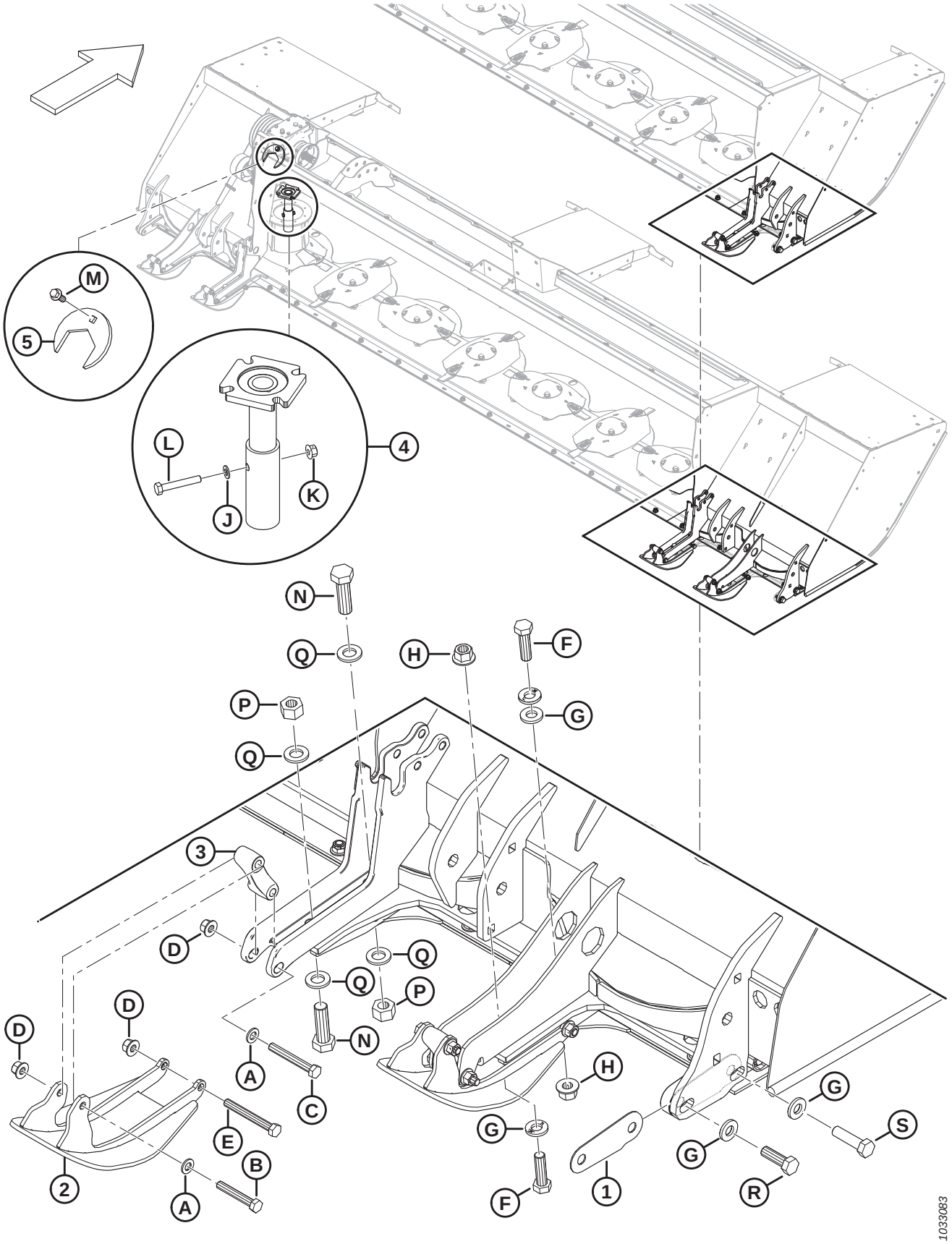

## CUTTERBAR TO FRAME (2018 AND LATER)

| Ref | Part Number | Description | 8/10 Disc Qty | Serial Number |
|---|---|---|---|---|
| 1 | 247206 | SHIM – CUTTERBAR [41] | A/R | 321190– |
| 2 | 257096 | SHOE – WELDMENT | 2/4 | 321190– |
| 3 | 238147 | LINK – CAST | 2/4 | 321190– |
| 4 | 325683 | ASSEMBLY – TOOL, DRIVE ALIGNMENT [42] | A/R | 321190– |
| 5 | 246314 | WRENCH – SAFECUT NUT [43] | 1/1 | 321190– |
| | | | | |
| A | 184714 | WASHER – FLAT REG M12-300HV-A3L | | |
| B | 135155 | BOLT – HEX HD M12 X 1.75 X 75-8.8-A3L | | |
| C | 184673 | BOLT – HEX HD M12 X 1.75 X 90-10.9-A3L | | |
| D | 136431 | NUT – HEX FLG CTR LOC M12 X 1.75-10-A3L | | |
| E | 184672 | BOLT – HEX HD M12 X 1.75 X 100-10.9-A3L | | |
| F | 136717 | BOLT – HEX HD M16 X 2 X 55-10.9 | | |
| G | 320226 | WASHER – HARD M16-300HV-ZINC | | |
| H | 136440 | NUT – HEX FLG CTR LOC M16 X 2-10-A3L | | |
| J | 184711 | WASHER – FLAT REG M10-200HV-A3L | | |
| K | 135799 | NUT – HEX FLG CTR LOC M10 X 1.5-10-A3L | | |
| L | 108172 | BOLT – HEX HD M10 X 1.5 X 65-8.8-A3L | | |
| M | 148798 | BOLT – HEX FLG HD M12 X 1.75 X 30-10.9-A3L | | |
| N | 136157 | BOLT – HEX HD M20 X 2.5 X 65-10.9-AA1J | | |
| P | 136124 | NUT – HEX M20 X 2.5-10-A3L (2016 AND LATER) | | |
| Q | 320225 | WASHER – HARD M20-300HV-ZINC | | |
| R | 184681 | BOLT – HEX HD M16 X 2 X 50-8.8-AA1J | | |
| S | 136141 | BOLT – HEX HD M16 X 2 X 60-8.8-AA1J | | |

41. Shim both sides of the header evenly as required to a maximum gap of 2 mm per side before tightening the bolts.
42. T-gearbox hub and cutterbar drive shaft to be aligned to +/– 3.2 mm or 1/8 in. Use tool (MD #325683) to achieve proper alignment. Assembly includes hardware (MD #184711, 135799, 108172). Tool (MD #325683) not supplied with header.
43. Wrench is attached to header. Used to loosen/tighten special nut (MD #246612, 246613). Refer to Section *2 Cutterbar – Eight and Ten Disc (2016 and Later), page 5*.

# 9 Mechanical Drives

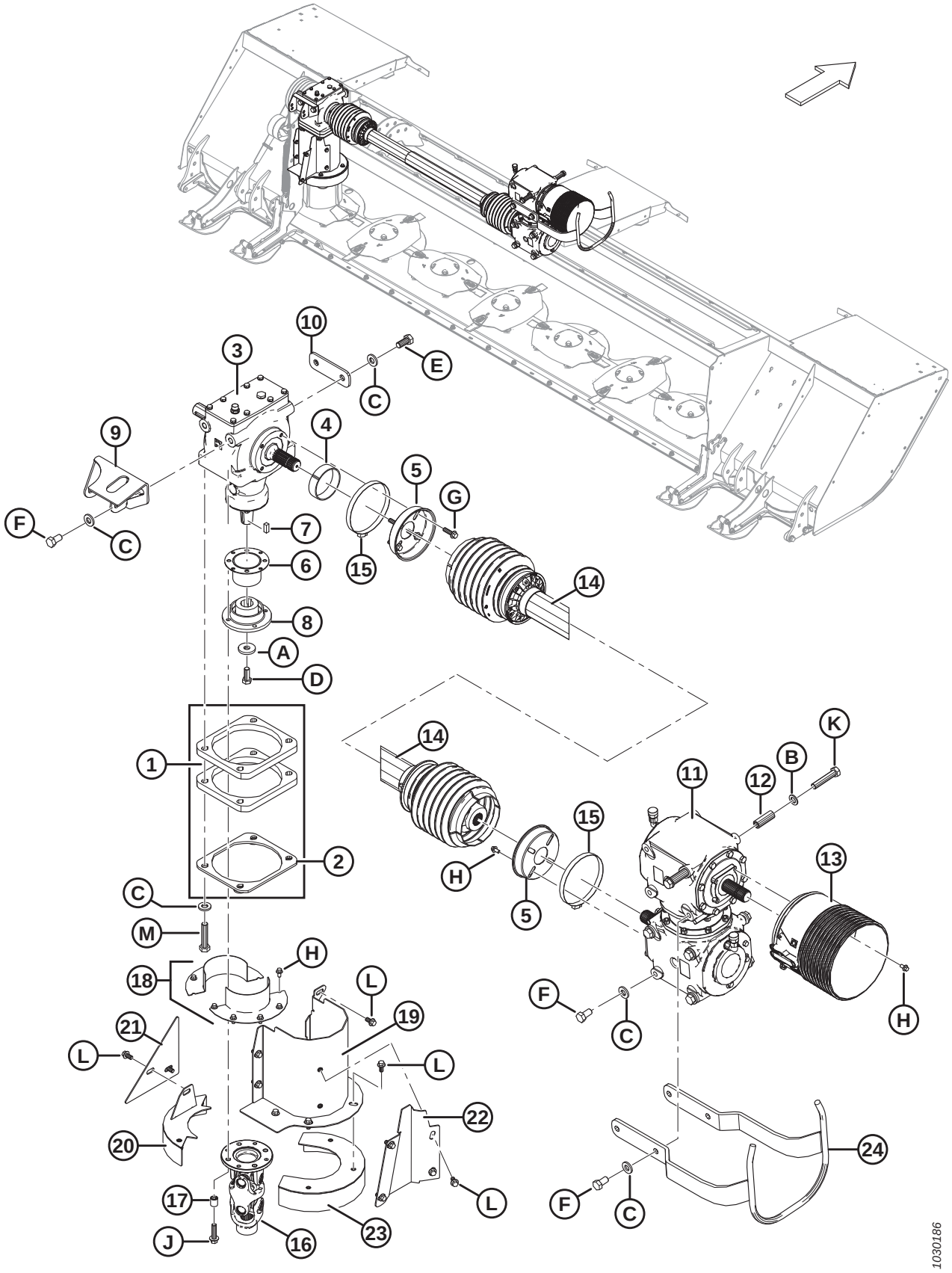

## MECHANICAL DRIVES

| Ref | Part Number | Description | Qty | Serial Number |
|---|---|---|---|---|
| 1 | 246100 | PLATE – 19.1 MM WIDTH (2015 ONLY) | 2 | 266820–285419 |
| 2 | 246101 | PLATE – 6.4 MM WIDTH (2015 ONLY) | 1 | 266820–285419 |
| 3 | 259516 | KIT – GEARBOX [44] | 1 | |
| 4 | 246196 | SPACER – GEARBOX | 1 | |
| 5 | 246184 | PLATE – SHIELD (CROSS SHAFT) | 2 | |
| 6 | 246087 | SHIELD – WELDMENT | 1 | |
| 7 | 222269 | KEY – SQUARE, 0.375 IN. WIDE, 0.75 IN LG | 1 | |
| 8 | 247103 | HUB – DRIVE | 1 | |
| 9 | 256375 | BRACKET – WELDT | 1 | |
| 10 | 247112 | PLATE | 1 | |
| 11 | 146783 | DRIVE – GEARBOX [45] | 1 | |
| 12 | 246167 | SPACER | 2 | |
| 13 | 224438 | SHIELD – CLUTCH GEARBOX | 1 | |
| 14 | 224595 | DRIVELINE – CROSS SHAFT [46] | 1 | |
| 15 | 135200 | CLAMP – HOSE (4.5-6.5 IN. RANGE) | 2 | |
| 16 | 259139 | ASSEMBLY – DRIVELINE | 1 | |
| | 259142 | ASSEMBLY – CROSS JOURNAL CENTER GREASE FITTING | 1 | |
| | 247120 | ASSEMBLY – CROSS JOURNAL CAP GREASE FITTING | 1 | |
| | 247121 | YOKE – SPLINED | 1 | |
| | 247122 | YOKE – FLANGE | 1 | |
| 17 | 222291 | SPACER | 4 | |
| 18 | 246691 | SHIELD – DRUM WELDT | 2 | |
| | 281497 | SHIELD – DRUM WELDT (SMALL DRUM) | 2 | |
| 19 | 281981 | SHIELD – VERTICAL WELDT (SMALL DRUM) | 1 | 321190– |
| | 247826 | SHIELD – VERTICAL WELDT (2016 AND LATER) | 1 | 285420– |
| | 246785 | SHIELD – VERTICAL WELDT (2015 ONLY) | 1 | 266820–285419 |
| 20 | 246687 | PLATE – BACK WELDMENT | 1 | |
| | 281493 | PLATE – BACK WELDMENT (SMALL DRUM) | 1 | |
| 21 | 281500 | PLATE – COVER (SMALL DRUM) | 1 | |
| | 246770 | PLATE – COVER | 1 | |
| 22 | 281501 | PLATE — SHIELD, VERTICAL DRIVE (SMALL DRUM) | 1 | 321190– |
| | 247827 | PLATE – SHIELD, VERTICAL DRIVE (2016 AND LATER) | 1 | 285420– |
| | 247017 | PLATE – SHIELD, VERTICAL DRIVE (2015 ONLY) | 1 | 266820–285419 |
| 23 | 281378 | DRUM – TOP | 1 | |
| | 281489 | DRUM — TOP (SMALL DRUM) | 1 | |
| 24 | 281014 | GUARD – WELDMENT, DRIVELINE (2016 AND LATER) | 1 | 285420– |
| | | | | |
| A | 4762 | WASHER – FLAT | | |
| B | 184717 | WASHER – FLAT REG M16-200HV-A3L | | |
| C | 320226 | WASHER – HARD M16-300HV-ZINC | | |

44. Kit includes T-gearbox (NSS) and cutterbar alignment tool (MD #325683). For service parts, refer to Section *11 T-Gearbox – Service Parts, page 33*.
45. For service parts, refer to Section *12 Drive and Swivel Gearbox – Service Parts, page 35*.
46. For service parts, refer to Section *10 Cross Shaft Driveline – Service Parts, page 31*.

## MECHANICAL DRIVES

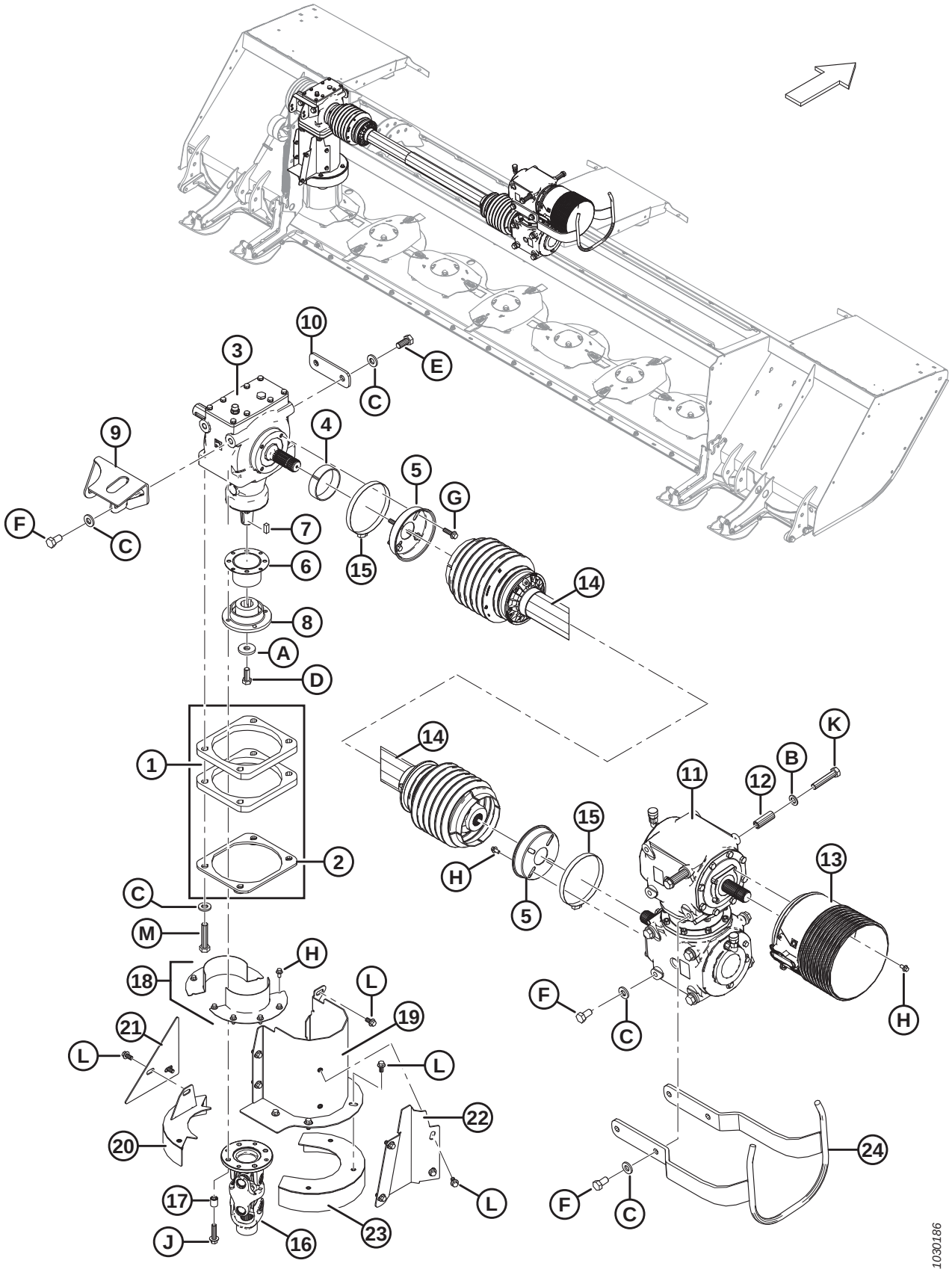

| Ref | Part Number | Description | Qty | Serial Number |
|---|---|---|---|---|
| D | 135491 | BOLT – HEX HD TFL M14 X 2 X 35-8.8-A3L | | |
| E | 136137 | BOLT – HEX HD TFL M16 X 2 X 35-8.8-A3L | | |
| F | 136143 | BOLT – HEX HD TFL M16 X 2 X 30-10.9-A3L | | |
| G | 136211 | BOLT – HEX FLG HD M10 X 1.5 X 35-8.8-A3L | | |
| H | 136485 | BOLT – HEX FLG HD TFL M8 X 1.25 X 16-8.8-A3L | | |
| J | 148799 | BOLT – HH FLANGE M12 X 1.75 X 45-10.9-A3L | | |
| K | 152602 | BOLT – HEX HD M16 X 2 X 80-10.9-A3L | | |
| L | 152655 | BOLT – HEX FLG HD M10 X 1.5 X 20-8.8-A3L | | |
| M | 136143 | BOLT – HEX HD TFL M16 X 2 X 30-10.9-A3L (2016 AND LATER) | | 285420– |
| | 181511 | BOLT – HEX HD M16 X 2 X 75-10.9-A3L (2015 ONLY) | | 266820–285419 |

# 10 Cross Shaft Driveline – Service Parts

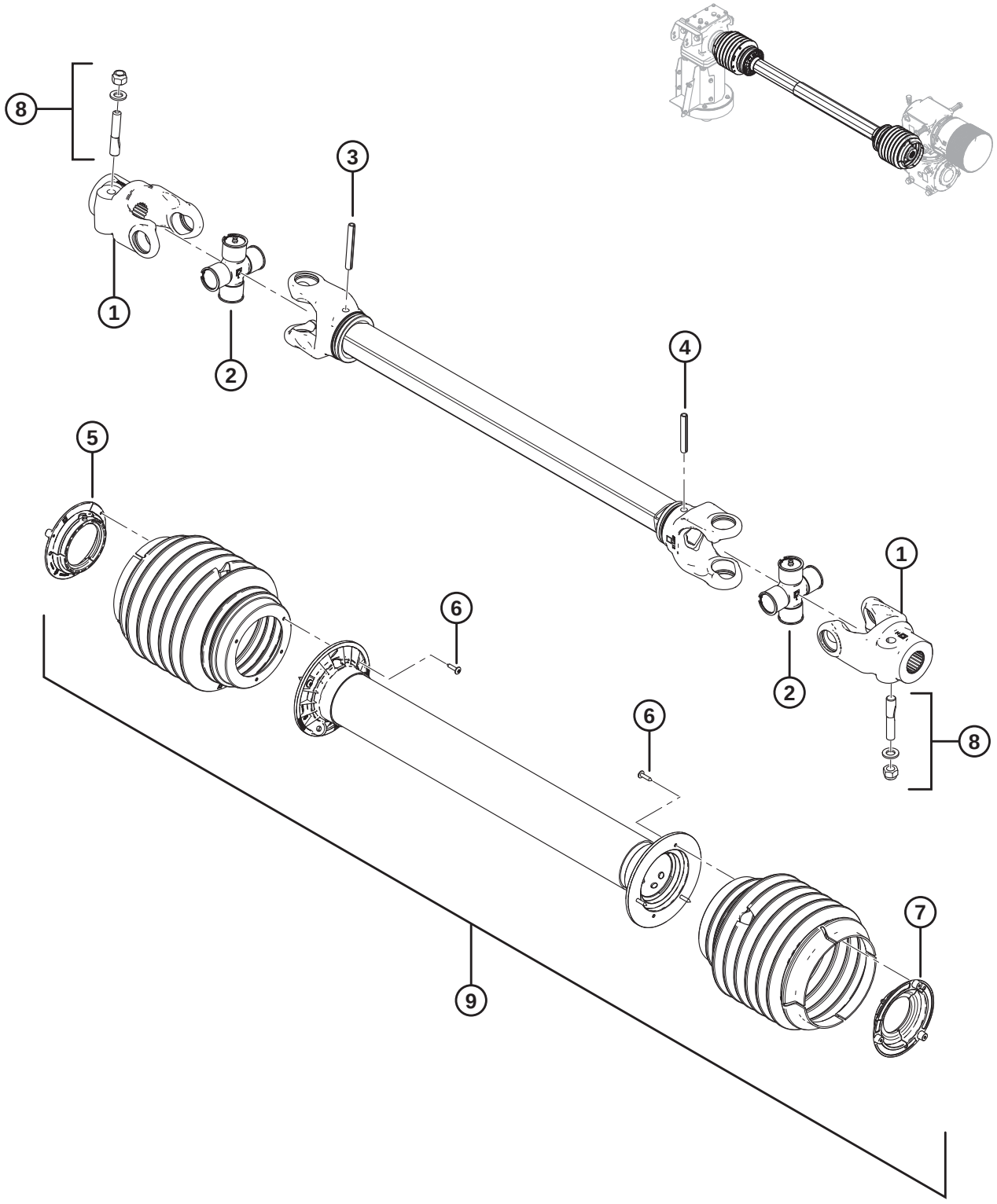

## CROSS SHAFT DRIVELINE – SERVICE PARTS

| Ref | Part Number | Description | Qty | Serial Number |
|---|---|---|---|---|
| | 224595 | DRIVELINE – CROSS SHAFT [47] | | |
| 1 | 247124 | YOKE [48] | 2 | |
| 2 | 247123 | CROSS KIT | 2 | |
| 3 | **256663** | **ROLL PIN (10 X 75)** | **1** | |
| 4 | 247126 | ROLL PIN (10 X 65) | 1 | |
| 5 | 247127 | SHIELD SUPPORT (OUTER) [49] | 1 | |
| 6 | 247128 | SCREW | 6 | |
| 7 | 247129 | SHIELD SUPPORT (INNER) [50] | 1 | |
| 8 | 247133 | KIT – TAPER PIN (2 SETS) | 2 | |
| 9 | 247134 | SHIELD KIT | 1 | |
| | 247132 | INSTRUCTION BOOKLET | A/R | |

47. Refer to Section *9 Mechanical Drives, page 27*.
48. Includes taper pins (MD #247133).
49. Outer support.
50. Inner support.

# 11 T-Gearbox – Service Parts

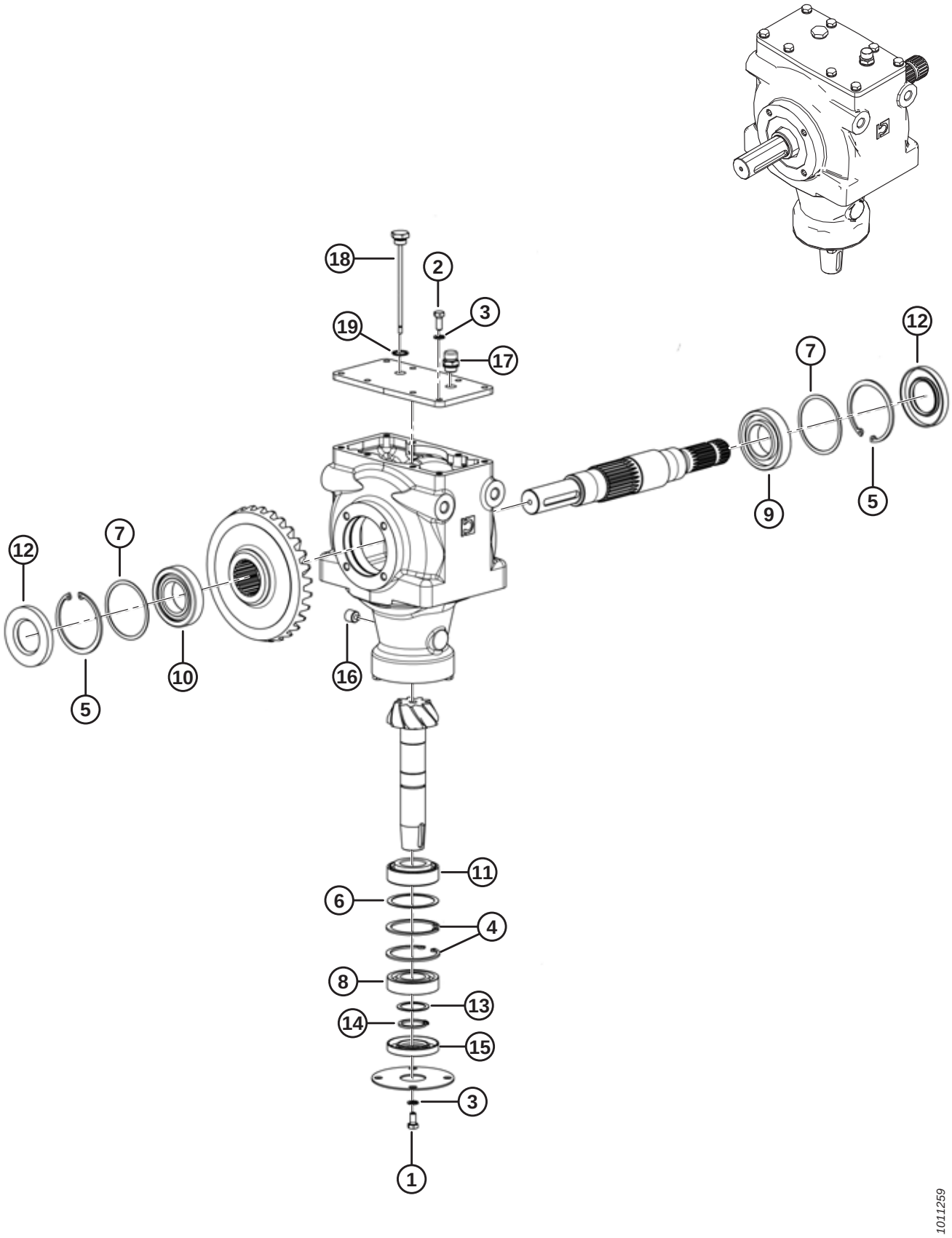

**NOTE:**

Parts illustrated but not listed are non-serviced parts. Illustrated for reference only.

| Ref | Part Number | Description | Qty | Serial Number |
|---|---|---|---|---|
| | 259516 | KIT – T-GEARBOX [51] | | |
| 1 | 247079 | SCREW – M8 X 16 X 1.25 | 4 | |
| 2 | 247080 | SCREW – M8 X 20 X 1.25 | 1 | |
| 3 | 247081 | LOCK WASHER – M8 | 5 | |
| 4 | 247082 | CIRCLIP INTERNAL – 72 X 2.5 | 2 | |
| 5 | 247083 | CIRCLIP INTERNAL – 85 X 3 | 2 | |
| 6 | 247084 | SHIM – 72 MM BORE | 1 | |
| 7 | 247085 | SHIM – 83 MM BORE | 2 | |
| 8 | 246082 | BALL BEARING – CYLINDRICAL (45 X 85 X 19) | 1 | |
| 9 | 246084 | BALL BEARING – CYLINDRICAL (35 X 72 X 17) | 1 | |
| 10 | 246080 | BEARING – CROSS (45 X 85 X 20.75) | 1 | |
| 11 | 246083 | BEARING – TAPER (35 X 72 X 24.25) | 1 | |
| 12 | 246085 | SEAL – CROSS (RUBBER) | 2 | |
| 13 | 247091 | SHIM – 35 MM | 1 | |
| 14 | 247094 | CIRCLIP EXTERNAL – 35 X 2.5 | 1 | |
| 15 | 247095 | SEAL – RUBBER (35 X 72 X 10) | 1 | |
| 16 | 247096 | PLUG – 3/8 IN. MAGNET | 1 | |
| 17 | 246086 | PLUG – 3/8 IN. BREATHER, C/W GASKET | 1 | |
| 18 | 247099 | PLUG – DIPSTICK (3/8 IN.) | 1 | |
| 19 | 247100 | GASKET | 1 | |

51. Refer to Section *9 Mechanical Drives, page 27*. Kit includes Drive Alignment Tool (MD #325683); refer to Sections *7 Cutterbar to Frame (2017 and Prior), page 23* and *8 Cutterbar to Frame (2018 and Later), page 25*.

# 12 Drive and Swivel Gearbox – Service Parts

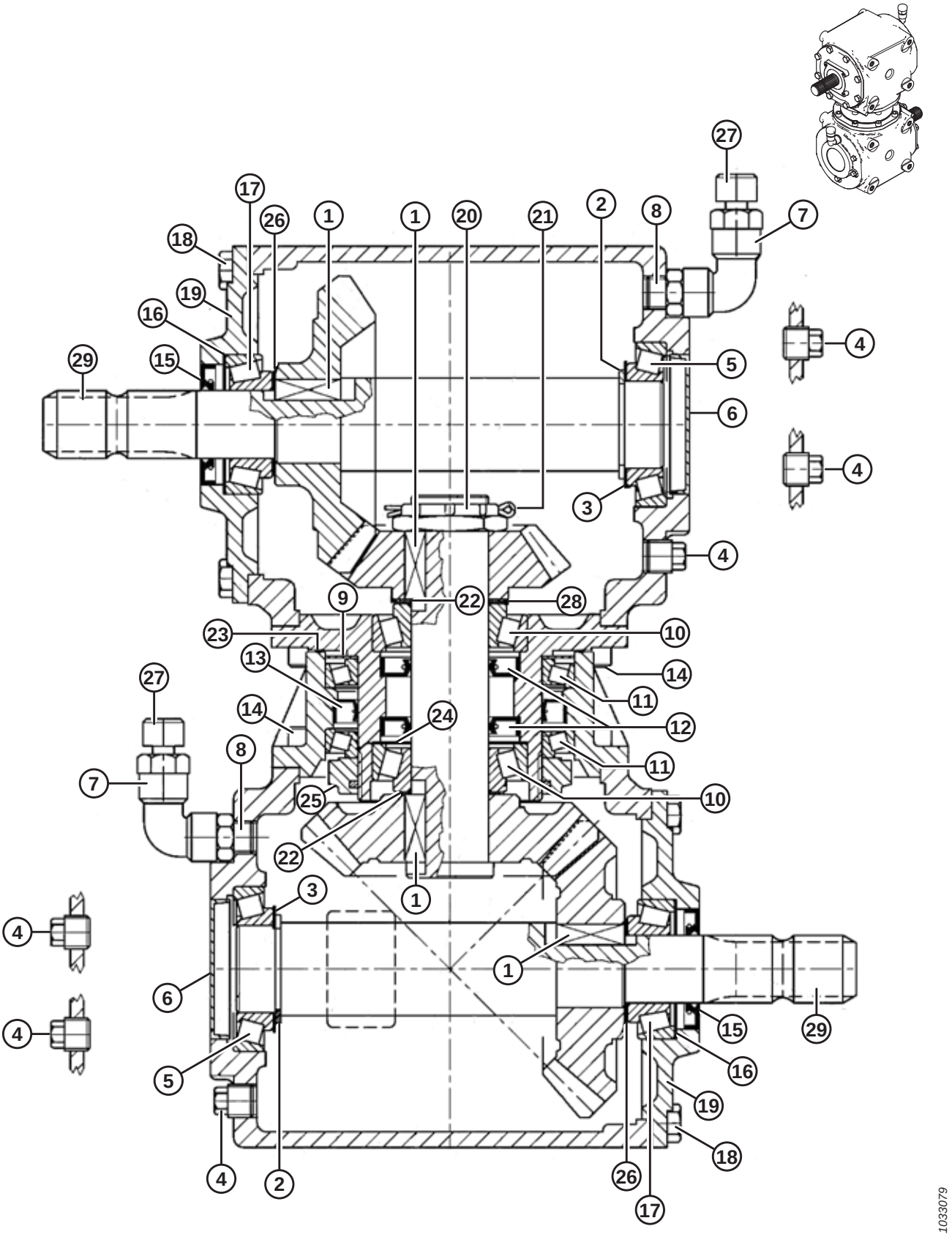

## DRIVE AND SWIVEL GEARBOX – SERVICE PARTS

| Ref | Part Number | Description | Qty | Serial Number |
|---|---|---|---|---|
| | 146783 | DRIVE – GEARBOX [52] | | |
| | 146784 | DRIVE – GEARBOX, SWIVEL (HITCH) [53] | | |
| 1 | 247031 | KEY – PARALLEL (12 MM WIDE) | 4 | |
| 2 | 247039 | RING – RETAINING EXTERNAL | 2 | |
| 3 | 247040 | SHIM – 45.3 X 65.3 | 2 | |
| 4 | 247041 | PLUG – 3/8 IN. | 6 | |
| 5 | 247042 | BEARING – BALL | 2 | |
| 6 | 247043 | CAP – STEEL (72 X 10) | 2 | |
| 7 | 247044 | ELBOW – 90° (3/8 IN.) | 2 | |
| 8 | 247045 | CONNECTOR – 3/8 IN. | 2 | |
| 9 | 247046 | WASHER – PROTECTIVE | 1 | |
| 10 | 247047 | BEARING – BALL | 2 | |
| 11 | 247048 | BEARING – BALL | 2 | |
| 12 | 247049 | SEAL – OIL (RUBBER) | 2 | |
| 13 | 247050 | SEAL – OIL (RUBBER, 95 X 120 X 12) | 1 | |
| 14 | 247051 | BOLT – HEX HEAD, M10-1.5, 25 MM LG, ZN PL | 16 | |
| 15 | 247053 | SEAL – DOUBLE LIP (35 X 62 X 8) | 2 | |
| 16 | 247054 | SHIM – 60.3 X 70.7 | 2 | |
| 17 | 247055 | BEARING – BALL, CYLINDRICAL | 2 | |
| 18 | 247056 | BOLT – HEX HEAD, M10-1.5, 22 MM LG, ZN PL | 16 | |
| 19 | 247057 | COVER | 2 | |
| 20 | 247059 | NUT – REGULAR HEX, M40-1.5, ZN PL | 1 | |
| 21 | 247060 | PIN – COTTER (B4 X 60) | 1 | |
| 22 | 247061 | SHIM – 40.3 X 51.5 | 2 | |
| 23 | 247063 | O-RING | 1 | |
| 24 | 247065 | SHIM – 69 X 79.9 | 1 | |
| 25 | 247066 | LOCKNUT – M95 X 2 H18.5 | 1 | |
| 26 | 247067 | SHIM – 35.3 X 1.3 | 2 | |
| 27 | 236994 | PLUG – OIL FILLER (3/8 IN.) | 2 | |
| 28 | 247071 | SHIM (SWIVEL GEARBOX ONLY) | 1 | |
| | 247135 | SHIM (DRIVE GEARBOX ONLY) | 1 | |
| 29 | 238103 | SHAFT – SPLINED, GEARBOX | 2 | |

52. Refer to Section *9 Mechanical Drives, page 27*.
53. Refer to Section *29 Hitch – Mechanical Drive, page 87*.

# 13 Header Shields

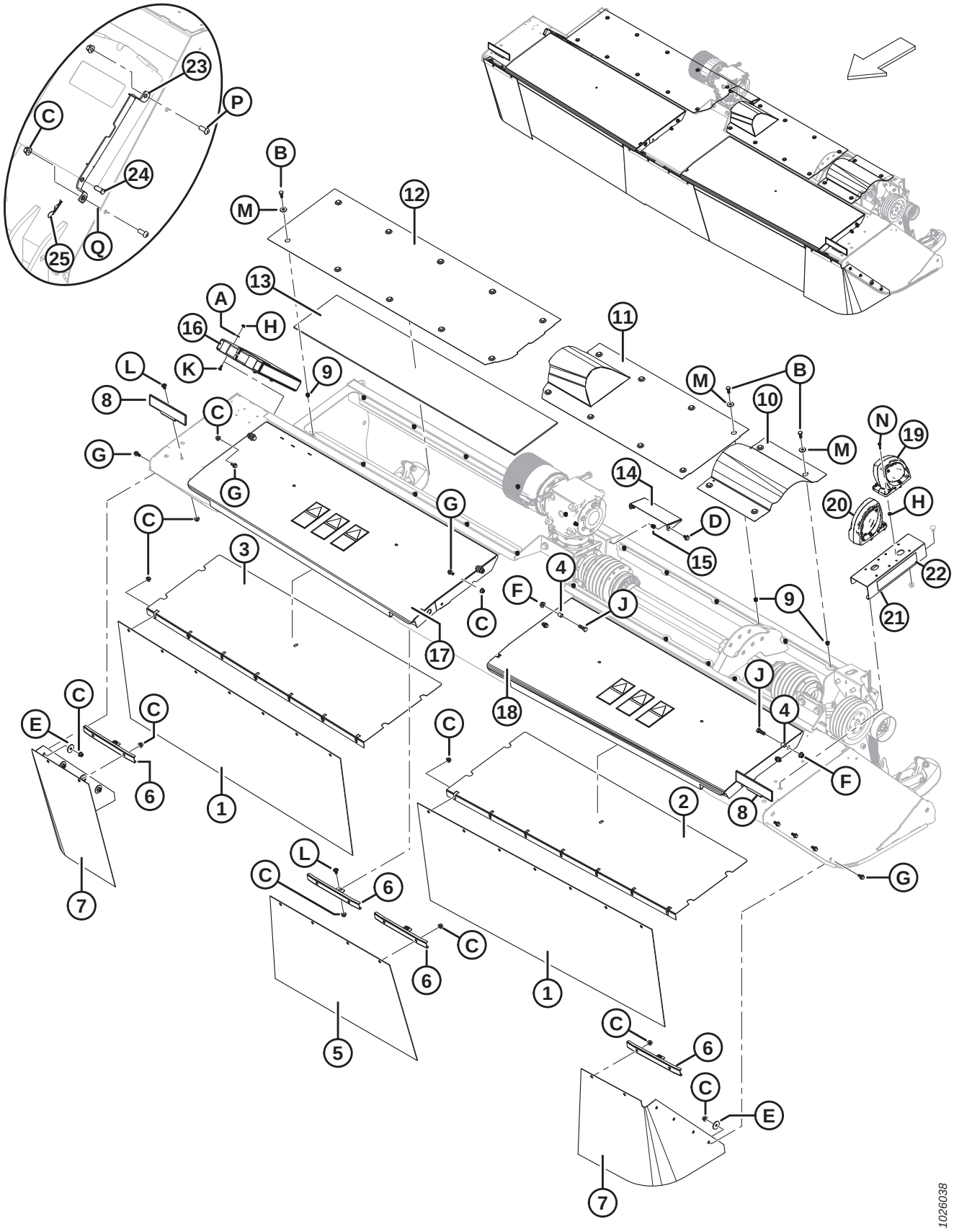

## HEADER SHIELDS

| Ref | Part Number | Description | Qty | Serial Number |
|---|---|---|---|---|
| 1 | 223883 | SHIELD – DOOR, RUBBER | 2 | |
| 2 | 246388 | LINER – COVER LH | 1 | |
| 3 | 224471 | LINER – COVER RH | 1 | |
| 4 | 224313 | SPACER | 4 | |
| 5 | 223884 | SHIELD – CENTER, RUBBER | 1 | |
| 6 | 224686 | SUPPORT – FRONT SHIELD | 4 | |
| 7 | 223904 | SHIELD – CORNER, RUBBER 13 FT | 2 | |
| | 223888 | SHIELD – CORNER, RUBBER 16 FT | 2 | |
| 8 | 246873 | ASSEMBLY – REFLECTOR [54] | 2 | |
| | 115146 | REFLECTOR – AMBER | | |
| 9 | 136843 | RIVNUT – M10 X 1.5 HEX M10 0.7-3.8 | 22 | |
| 10 | 246858 | SHIELD – TOP | 1 | |
| 11 | 246878 | ASSEMBLY – TOP SHIELD C/W DECALS | 1 | |
| 12 | 246880 | ASSEMBLY – TOP SHIELD C/W DECALS | 1 | |
| 13 | 246346 | LINER – FRAME | 1 | |
| 14 | 246413 | SHIELD – REAR | 1 | |
| 15 | 136876 | INSERT – HEX M10 (THIN FLANGE) | 2 | |
| 16 | 118234 | CASE – MANUAL | 1 | |
| | 184372 | DECAL – READ MANUAL | 1 | |
| 17 | 246876 | ASSEMBLY – RH COVER C/W DECALS [55] | 1 | |
| 18 | 246874 | ASSEMBLY – LH COVER C/W DECALS [56] | 1 | |
| 19 | 203547 | LAMP – CLEARANCE, DT CONNECTOR | 1 | |
| 20 | 203548 | LAMP – LH TAIL, DT CONNECTOR | 1 | |
| 21 | 223185 | ASSEMBLY-SUPPORT, DUAL LAMP, LH [57] | 1 | |
| 22 | 115147 | REFLECTOR – RED | 1 | |
| 23 | 183866 | BRACKET – QCB MOUNT | 1 | |
| 24 | 281931 | PIN – CLEVIS 7/16 X 1 | 1 | |
| 25 | 15380 | PIN – HAIR | 1 | |
| | | | | |
| A | 18596 | WASHER – SAE FLAT 9/32 ID X 5/8 IN OD ZP | | |
| B | 30627 | BOLT – HEX HD TFL M10 X 1.5 X 25-8.8-A3L | | |
| C | 135799 | NUT – HEX FLG CTR LOC M10 X 1.5-10-A3L | | |
| D | 136151 | BOLT – HEX FLG HD TFL M10 X 1.5 X 16-8.8-A3L | | |
| E | 42592 | WASHER – FLAT 13.5 MM ID x 47 MM OD ZP | | |
| F | 148645 | NUT – HEX FLG STVR LOC M12 X 1.75-10-A3L | | |
| G | 152655 | BOLT – HEX FLG HD M10 X 1.5 X 20-8.8-A3L | | |
| H | 152668 | NUT – HEX FLG CTR LOC M6 X 1-8-A2L | | |
| J | 152730 | BOLT – HEX HD TFL M12 X 1.75 X 35-10.9-A3L | | |
| K | 184641 | BOLT – RHSN M6 X 1 X 20-8.8-A2L | | |

54. Includes amber reflector (MD #115146).
55. Includes decals (MD #246997, 194466, 247167, and 194465).
56. Includes R116 decal (MD #247004) and R113 decal (MD #246998), as well as decals (MD #194466, 247167, and 194465).
57. Includes red reflector (MD #115147).

## HEADER SHIELDS

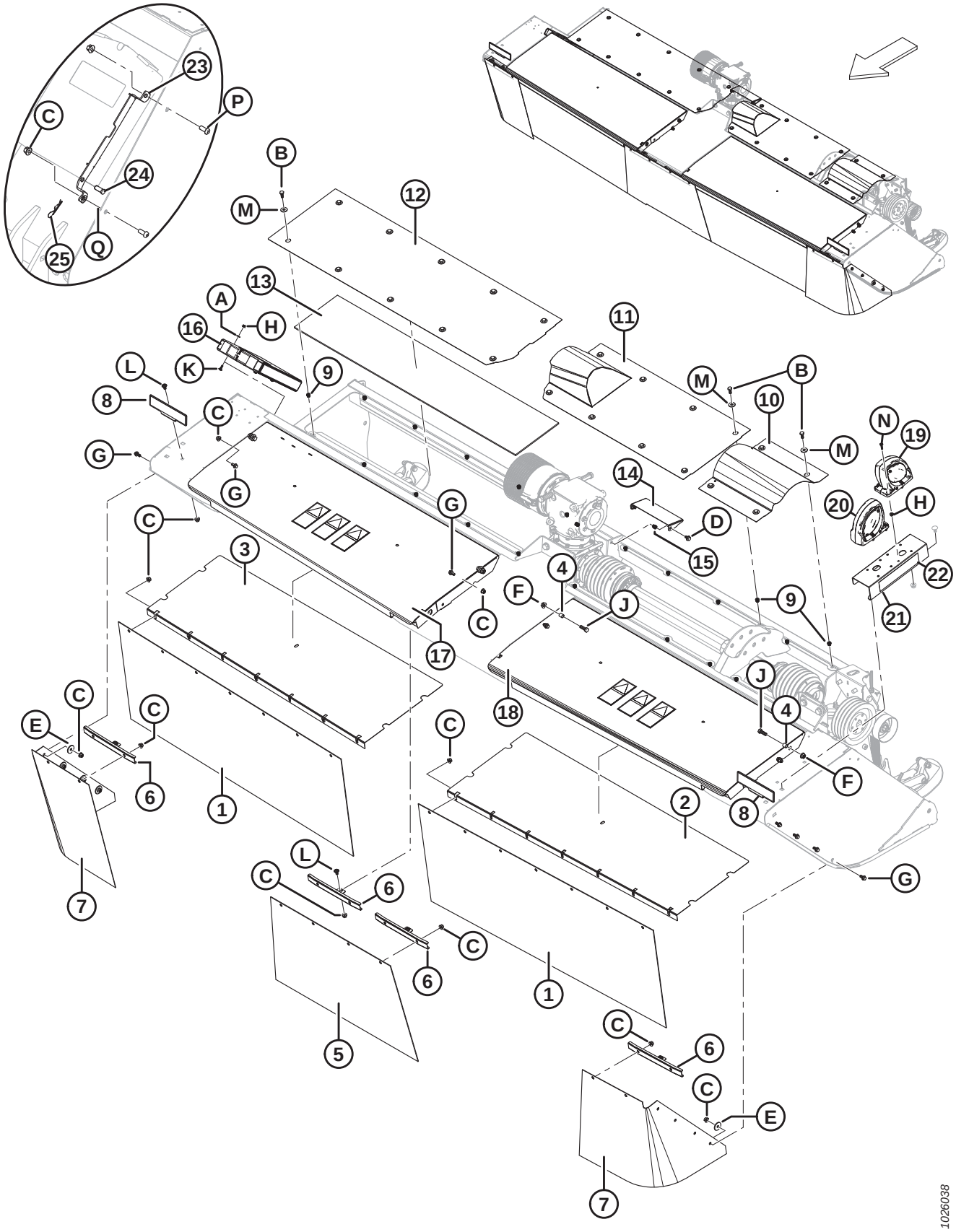

## HEADER SHIELDS

| Ref | Part Number | Description | Qty | Serial Number |
|---|---|---|---|---|
| L | 184657 | BOLT – RHSSN M10 X 1.5 X 20-8.8-A3L | | |
| M | 184712 | WASHER – FLAT LARGE M10-200HV-A3L | | |
| N | 136252 | SCREW – PAN HD M6 X 1 X 25-4.8-H-A2L | | |
| P | 135852 | SCREW – HEX SOC BTN HD M10 X 1.5 X 25-10.9-AA1J | | |
| Q | 184711 | WASHER – FLAT REG M10-200 HV-AA1J | | |

# 14 Roll Conditioner – Polyurethane/Steel (2015)

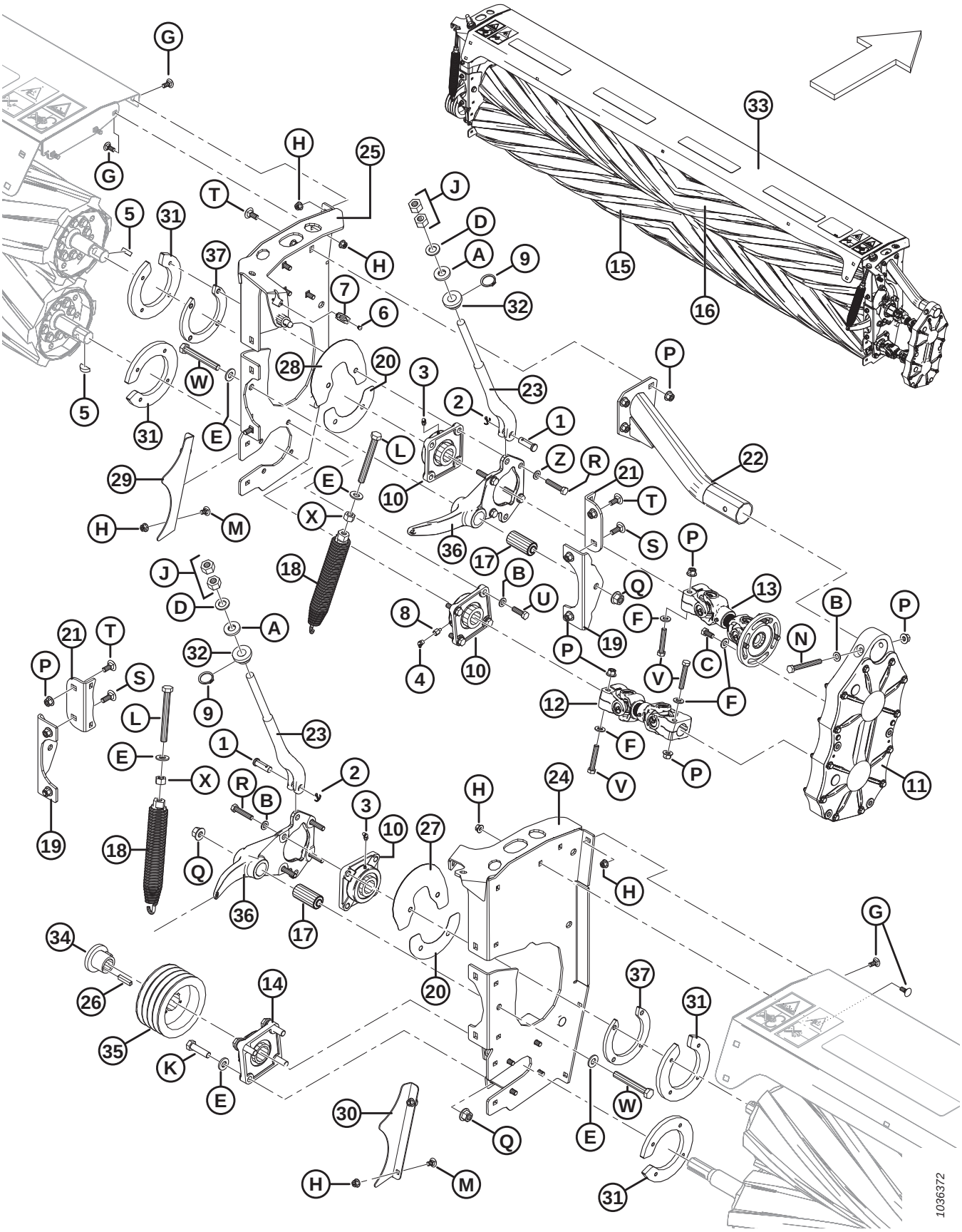

## ROLL CONDITIONER – POLYURETHANE/STEEL (2015)

| Ref | Part Number | Description | Qty | Serial Number |
|---|---|---|---|---|
| 1 | 18620 | PIN – CLEVIS | 2 | 266820–285419 |
| 2 | 18648 | PIN – COTTER 3/16 DIA X 1.25 ZP | 2 | 266820–285419 |
| 3 | 21301 | FITTING – LUBRICATION | 2 | 266820–285419 |
| 4 | 30087 | FITTING – LUBE 45° 1/8 NPT | 1 | 266820–285419 |
| 5 | 30836 | KEY – WOODRUFF (3/8 X 1 1/4 NOM.) | 2 | 266820–285419 |
| 6 | 113799 | RIVET – POP | 2 | 266820–285419 |
| 7 | **REF** | **CLIP – TOLERANCE** [58] | **1** | **266820–285419** |
| 8 | 136616 | FITTING – LUBRICATION STRAIGHT ADAPTER | 1 | 266820–285419 |
| 9 | 136832 | RING – EXT RETAINING HEAVY DUTY | 2 | 266820–285419 |
| 10 | 221716 | HOUSING – FLANGED | 3 | 266820–285419 |
| 11 | 307211 | DRIVE – GEAR (CONDITIONER ROLL TIMING) [59] | 1 | 266820–285419 |
| 12 | 221765 | DRIVELINE – LOWER | 1 | 266820–285419 |
| 13 | 221768 | DRIVELINE – UPPER | 1 | 266820–285419 |
| 14 | 221769 | HOUSING – FLANGED | 1 | 266820–285419 |
| 15 | 221937 | ASSEMBLY – LOWER (POLY ONLY)[60] | 1 | 266820–285419 |
| | 247837 | KIT – LOWER STEEL ROLL [61] | 1 | 266820–285419 |
| 16 | 221938 | ASSEMBLY – UPPER (POLY ONLY) [60] | 1 | 266820–285419 |
| | 247836 | KIT – UPPER STEEL ROLL [61] | 1 | 266820–285419 |
| 17 | 222658 | BUSHING – RUBBER | 2 | 266820–285419 |
| 18 | 222664 | ASSEMBLY – SPRING | 2 | 266820–285419 |
| 19 | 222988 | BRACKET – PIVOT | 2 | 266820–285419 |
| 20 | 223389 | SHIELD – ROLL ARM, LOWER | 2 | 266820–285419 |
| 21 | 223406 | ANGLE – COND PANEL | 2 | 266820–285419 |
| 22 | 223467 | SUPPORT – WELDMENT | 1 | 266820–285419 |
| 23 | 247259 | STOP – MACHINING | 2 | 266820–285419 |
| 24 | 224554 | LH PANEL – W/ DECALS | 1 | 266820–285419 |
| 25 | 247856 | RH PANEL – W/ DECALS | 1 | 266820–285419 |
| 26 | 246424 | KEY – 10 MM X 8 MM X 45 MM | 1 | 266820–285419 |
| 27 | 246509 | SHIELD – LH C/W DECAL | 1 | 266820–285419 |
| 28 | 246510 | SHIELD – RH C/W DECAL | 1 | 266820–285419 |
| 29 | 246751 | GUARD – RH (POLY ONLY) [60] | 1 | 266820–285419 |
| | 246747 | GUARD – RH (STEEL ONLY) [62] | 1 | 266820–285419 |
| 30 | 246752 | GUARD – LH (POLY ONLY) [60] | 1 | 266820–285419 |
| | 246748 | GUARD – LH (STEEL ONLY) [62] | 1 | 266820–285419 |
| 31 | 281325 | PLATE – CLAMP, MACHINED (POLY ONLY) [60] | 4 | 266820–285419 |
| | 281324 | PLATE – CLAMP, MACHINED (STEEL ONLY) [62] | 4 | 266820–285419 |

58. Tolerance clip (MD #135813) is superseded by latch assembly (MD #320524), which includes latch (NSS), tolerance clip (NSS), and latch nut (NSS).
59. For service parts, refer to Section *17 Roll Conditioner – Gear Drive Service Parts, page 53*.
60. For polyurethane roll only.
61. Kit is intended for 2015 model year units only.
62. For steel roll only.

## ROLL CONDITIONER – POLYURETHANE/STEEL (2015)

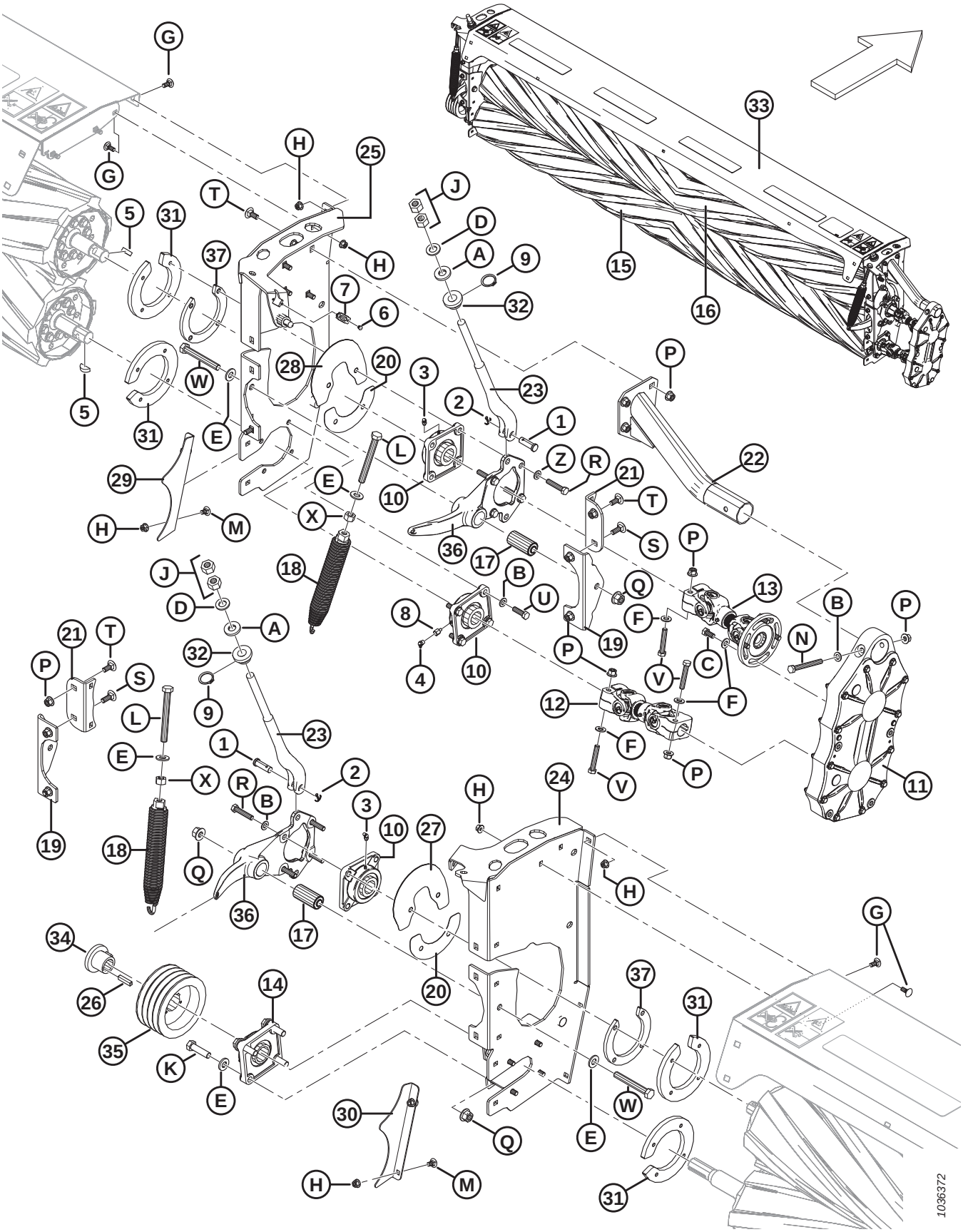

## ROLL CONDITIONER – POLYURETHANE/STEEL (2015)

| Ref | Part Number | Description | Qty | Serial Number |
|---|---|---|---|---|
| 32 | 246799 | STOP – PLASTIC | 2 | 266820–285419 |
| 33 | 256581 | ASSY – ROLL COND COVER W/ ANTI-SLIPS [63] | 1 | 266820–285419 |
| 34 | 246844 | BUSHING | 1 | 266820–285419 |
| 35 | 246847 | PULLEY – 4 HB | 1 | 266820–285419 |
| 36 | 247841 | KIT – ROLL ARM [64] | 2 | 266820–285419 |
| 37 | 246762 | PLATE – SPACER (BEARING HOUSING) [65] | 2 | 266820–285419 |
| | | | | |
| A | 16235 | WASHER – FLAT | | |
| B | 184714 | WASHER – FLAT REG M12-300HV-A3L | | |
| C | 50155 | BOLT – HEX HD TFL M12 X 1.75 X 25-8.8-A3L | | |
| D | 320225 | WASHER – HARD M20-300HV-ZINC | | |
| E | 320226 | WASHER – HARD M16-300HV-ZINC | | |
| F | 135369 | WASHER – HARDENED | | |
| G | 135785 | BOLT – RHSN M10 X 1.5 X 25-8.8-A3L | | |
| H | 135799 | NUT – HEX FLG CTR LOC M10 X 1.5-10-A3L | | |
| J | 136124 | NUT – HEX M20 X 2.5-10-A3L | | |
| K | 136141 | BOLT – HEX HD M16 X 2 X 60-8.8-A3L | | |
| L | 136172 | BOLT – HEX HD TFL M16 X 2 X 140-8.8-A3L | | |
| M | 136178 | BOLT – RHSN M10 X 1.5 X 20-8.8-A3L | | |
| N | 136423 | BOLT – HEX HD M12 X 1.75 X 110-8.8-A3L | | |
| P | 136431 | NUT – HEX FLG CTR LOC M12 X 1.75-10-A3L | | |
| Q | 136440 | NUT – HEX FLG CTR LOC M16 X 2-10-A3L | | |
| R | 152274 | BOLT – HEX HD M12 X 1.75 X 60-8.8-A3L | | |
| S | 136291 | BOLT – RHSN TFL M12 X 1.75 X 35-8.8-A3L | | |
| T | 184667 | BOLT – RHSN M12 X 1.75 X 30-8.8-A3L | | |
| U | 184669 | BOLT – HEX HD M12 X 1.75 X 40-8.8-A3L | | |
| V | 184675 | BOLT – HEX HD M12 X 1.75 X 70-8.8-A3L | | |
| W | 184678 | BOLT – HEX HD M16 X 2 X 120-8.8-A3L | | |
| X | 184699 | NUT – HEX M16 X 2-8-A3L | | |

63. Was previously cover (MD #246831), which has been superseded by cover (MD #256581). Order cover (MD #246831) until stock is depleted, then order cover (MD #256581).
64. Kit is intended for 2015 model year units only.
65. Spacer plate (MD #246762) is for the bearing housing.

# 15 Roll Conditioner – Polyurethane/Steel (2016 and Later)

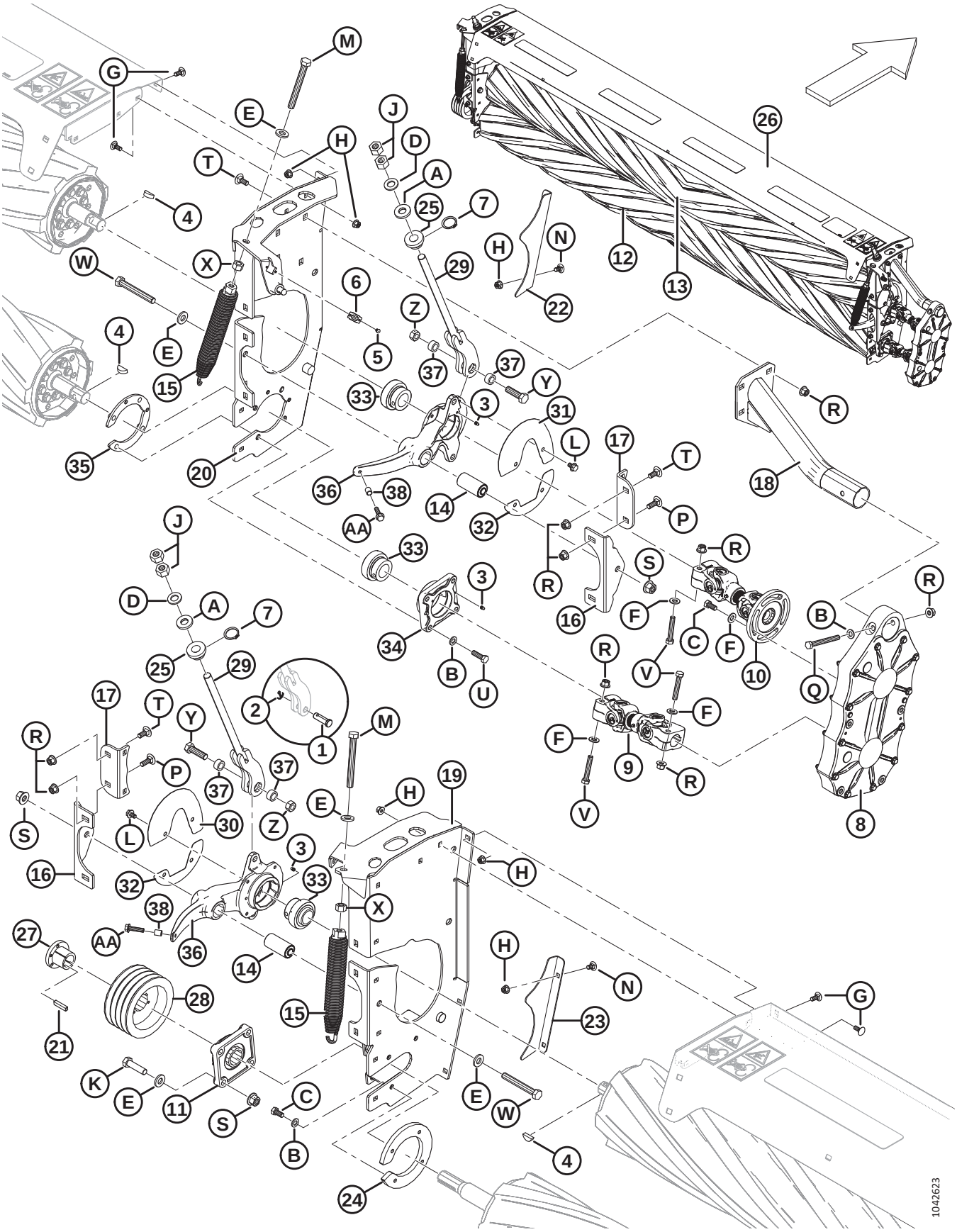

## ROLL CONDITIONER – POLYURETHANE/STEEL (2016 AND LATER)

| Ref | Part Number | Description | Qty | Serial Number |
|---|---|---|---|---|
| 1 | 18620 | PIN – CLEVIS [66] | 2 | 285420–**486189** |
| 2 | 18648 | PIN – COTTER 3/16 DIA X 1.25 ZP [66] | 2 | 285420–**486189** |
| 3 | 18671 | FITTING – LUBE 1/4, 28 UNF | 3 | 285420– |
| 4 | 30836 | KEY – WOODRUFF (3/8 X 1 1/4 NOM.) | 3 | 285420– |
| 5 | 113799 | RIVET – POP | 2 | 285420– |
| 6 | **REF** | **CLIP – TOLERANCE** [67] | **1** | **285420–** |
| 7 | 136832 | RING – EXT RETAINING HEAVY DUTY | 2 | 285420– |
| 8 | 307211 | DRIVE – GEAR (CONDITIONER ROLL TIMING) [68] | 1 | 285420– |
| 9 | 221765 | DRIVELINE – LOWER | 1 | 285420– |
| 10 | 221768 | DRIVELINE – UPPER | 1 | 285420– |
| 11 | 221769 | HOUSING – FLANGED | 1 | 285420– |
| 12 | 221937 | ROLL ASSY – LOWER ROLL POLY [69] | 1 | 285420– |
| | 259592 | ROLL ASSY – LOWER ROLL STEEL [70] | 1 | 285420– |
| 13 | 221938 | ROLL ASSY – UPPER ROLL POLY [69] | 1 | 285420– |
| | 247832 | ROLL ASSY – UPPER ROLL STEEL [71] | 1 | 285420– |
| 14 | 222658 | BUSHING – RUBBER | 2 | 285420– |
| 15 | 222664 | ASSEMBLY – SPRING | 2 | 285420– |
| 16 | 222988 | BRACKET – PIVOT | 2 | 285420– |
| 17 | 223406 | ANGLE – COND PANEL | 2 | 285420– |
| 18 | 223467 | SUPPORT – WELDMENT | 1 | 285420– |
| 19 | 224554 | LH PANEL – ASSY W/ DECALS | 1 | 285420– |
| 20 | 247856 | RH PANEL – ASSY W/ DECALS | 1 | 285420– |
| 21 | 246424 | KEY – 10 MM X 8 MM X 45 MM | 1 | 285420– |
| 22 | 246751 | GUARD – RH, POLY ROLL[69] | 1 | 285420– |
| | 246747 | GUARD – RH, STEEL ROLL[71] | 1 | 285420– |
| 23 | 246752 | GUARD – LH, POLY ROLL[69] | 1 | 285420– |
| | 246748 | GUARD – LH, STEEL ROLL [71] | 1 | 285420– |
| 24 | 281325 | PLATE – CLAMP, POLY ROLL [69] | 1 | 285420– |
| | 281324 | PLATE – CLAMP, STEEL ROLL [71] | 1 | 285420– |
| 25 | 246799 | STOP – PLASTIC | 2 | 285420– |
| 26 | 256581 | ASSY – ROLL COND COVER W/ ANTI-SLIPS [72] | 1 | 285420– |
| 27 | 246844 | BUSHING | 1 | 285420– |
| 28 | 246847 | PULLEY – 4 HB | 1 | 285420– |

66. Used on the model year 2023 and prior roll stop (MD #247259).
67. Tolerance clip (MD #135813) is superseded by latch assembly (MD #320524), which includes latch (NSS), tolerance clip (NSS), and latch nut (NSS).
68. For service parts, refer to Section *17 Roll Conditioner – Gear Drive Service Parts, page 53*.
69. For polyurethane roll only.
70. Was previously steel lower roll (MD #307889), which has been superseded by steel lower roll (MD #259592). Order steel lower roll (MD #307889) until stock is depleted, then order steel lower roll (MD #259592).
71. For steel roll only.
72. Was previously cover (MD #246831), which has been superseded by cover (MD #256581). Order cover (MD #246831) until stock is depleted, then order cover (MD #256581).

## ROLL CONDITIONER – POLYURETHANE/STEEL (2016 AND LATER)

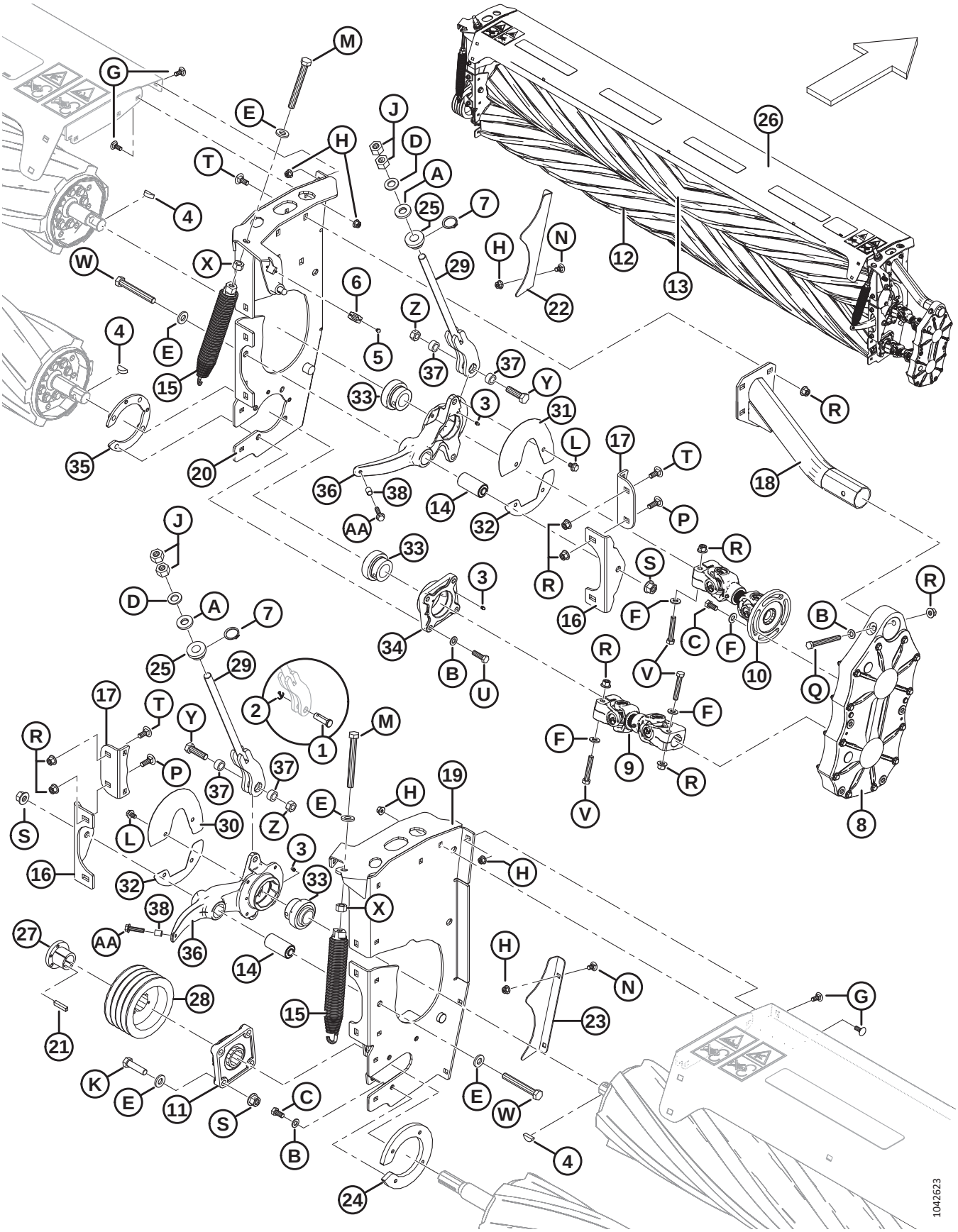

| Ref | Part Number | Description | Qty | Serial Number |
|---|---|---|---|---|
| 29 | 247259 | STOP – WELDT [73] | 2 | 285420–**486189** |
| | **259621** | **STOP – WELDT** [74] | **2** | **486190–** |
| 30 | 247854 | SHIELD – LH, W/ DECAL | 1 | 285420– |
| 31 | 247855 | SHIELD – RH, W/ DECAL | 1 | 285420– |
| 32 | 247305 | SHIELD – ROLL ARM, LOWER | 2 | 285420– |
| 33 | 247307 | BEARING – SPH OD C/W COLLAR 1.5 IN BORE | 3 | 285420– |
| 34 | 247309 | HOUSING – MACHINED | 1 | 285420– |
| 35 | 247420 | PLATE – BRG HSG, FLOW DRILLED | 1 | 285420– |
| 36 | **259622** | **KIT – ROLL STOP W/ BUSHING R1** [75] | 2 | 285420–**486189** |
| | **359253** | **ARM – ROLL - C/W BUSHING** [76] | **2** | **486190–** |
| 37 | **325857** | **TUBE – PIVOT** | **4** | **486190–** |
| 38 | **338003** | **SPACER – ROLL ARM** | **2** | **486190–** |
| | | | | |
| A | 16235 | WASHER – FLAT | | |
| B | 184714 | WASHER – FLAT REG M12-300HV-A3L | | |
| C | 50155 | BOLT – HEX HD TFL M12 X 1.75 X 25-8.8-A3L | | |
| D | 320225 | WASHER – HARD M20-300HV-ZINC | | |
| E | 320226 | WASHER – HARD M16-300HV-ZINC | | |
| F | 135369 | WASHER – HARDENED | | |
| G | 135785 | BOLT – RHSN M10 X 1.5 X 25-8.8-A3L | | |
| H | 135799 | NUT – HEX FLG CTR LOC M10 X 1.5-10-A3L | | |
| J | 136124 | NUT – HEX M20 X 2.5-10-A3L | | |
| K | 184681 | BOLT – HEX HD M16 X 2 X 50-8.8-AA1J | | |
| L | 136151 | BOLT – HEX FLG HD TFL M10 X 1.5 X 16-8.8-A3L | | |
| M | 136172 | BOLT – HEX HD TFL M16 X 2 X 140-8.8-A3L | | |
| N | 136178 | BOLT – RHSN M10 X 1.5 X 20-8.8-A3L | | |
| P | 136291 | BOLT – RHSN TFL M12 X 1.75 X 35-8.8-A3L | | |
| Q | 136423 | BOLT – HEX HD M12 X 1.75 X 110-8.8-A3L | | |
| R | 136431 | NUT – HEX FLG CTR LOC M12 X 1.75-10-A3L | | |
| S | 136440 | NUT – HEX FLG CTR LOC M16 X 2-10-A3L | | |
| T | 184667 | BOLT – RHSN M12 X 1.75 X 30-8.8-A3L | | |
| U | 184669 | BOLT – HEX HD M12 X 1.75 X 40-8.8-A3L | | |
| V | 184675 | BOLT – HEX HD M12 X 1.75 X 70-8.8-A3L | | |
| W | 184678 | BOLT – HEX HD M16 X 2 X 120-8.8-A3L | | |
| X | 184699 | NUT – HEX M16 X 2-8-A3L | | |
| Y | **136717** | **BOLT – HEX HD M16 X 2 X 55-10.9** | | **486190–** |

73. Service part for model year 2023 and prior headers that haven't already been updated with roll stop kit (MD #259622). For information on the roll stop kit, refer to Section *16 Roll Conditioner – Roll Arms and Stops, page 51*.
74. Used on model year 2024 and later headers.
75. If you are replacing the superseded roll arm (MD #247828) on model year 2023 and prior headers, you need to order Roll Stop kit (MD #259622), which includes roll arm (MD #359253), roll stop (MD #259621), and hardware. Roll stop (MD #247259) is **NOT** compatible with roll arm (MD #359253). For more information to identify which roll arm and roll stop your header currently has installed, refer to Section *16 Roll Conditioner – Roll Arms and Stops, page 51*.
76. Includes roll arm (NSS), bolt (MD #152947), spacer (MD #338003), and two bushings (MD #222658).

## ROLL CONDITIONER – POLYURETHANE/STEEL (2016 AND LATER)

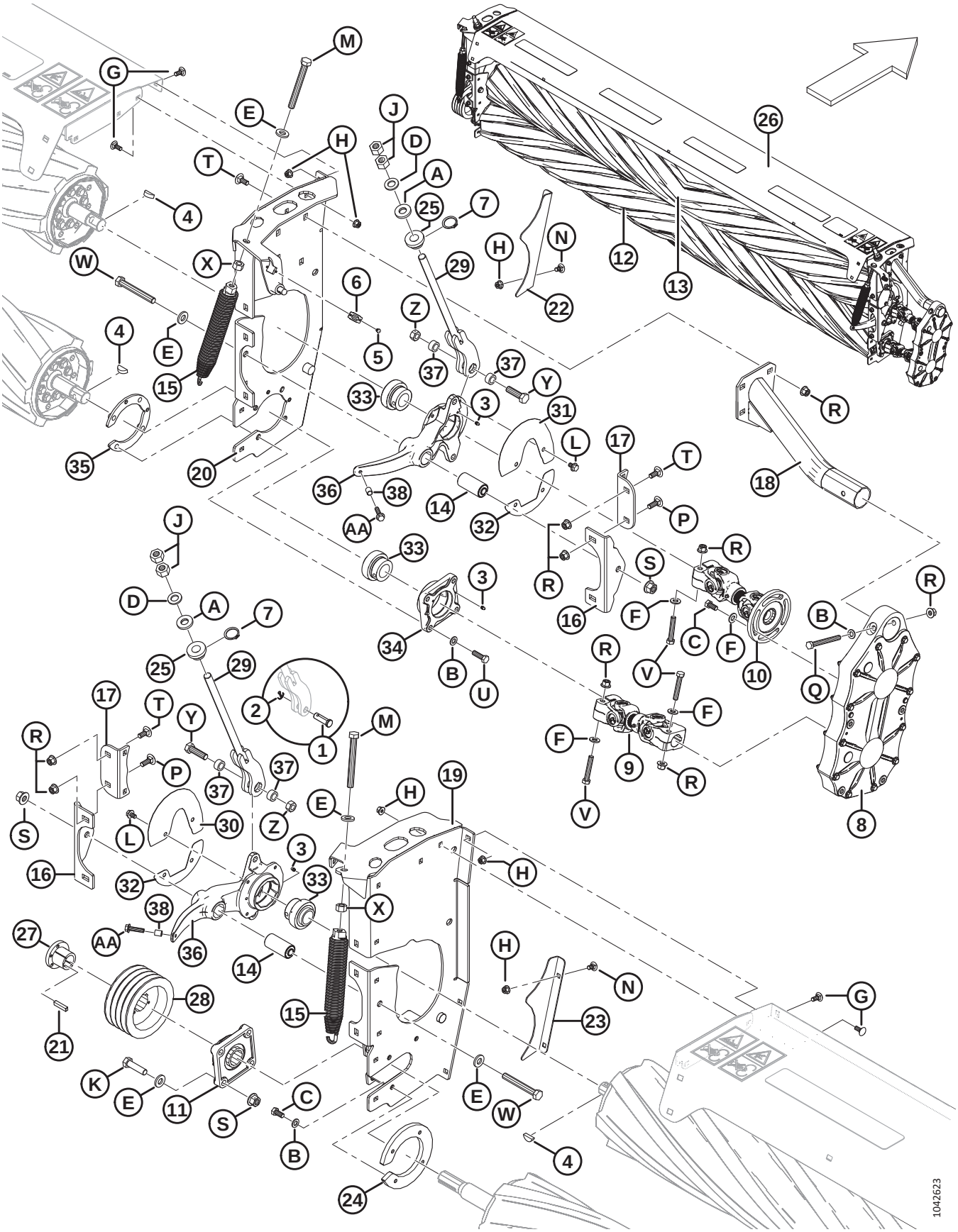

| Ref | Part Number | Description | Qty | Serial Number |
|---|---|---|---|---|
| Z | **320208** | **NUT – HEX CTR LOCK M16 X 2-12-ZINC** | | **486190–** |
| AA | **152947** | **BOLT – HEX FLG HD TFL M10 X 1.5 X 40-10.9-AA1J** | | **486190–** |

# 16 Roll Conditioner – Roll Arms and Stops

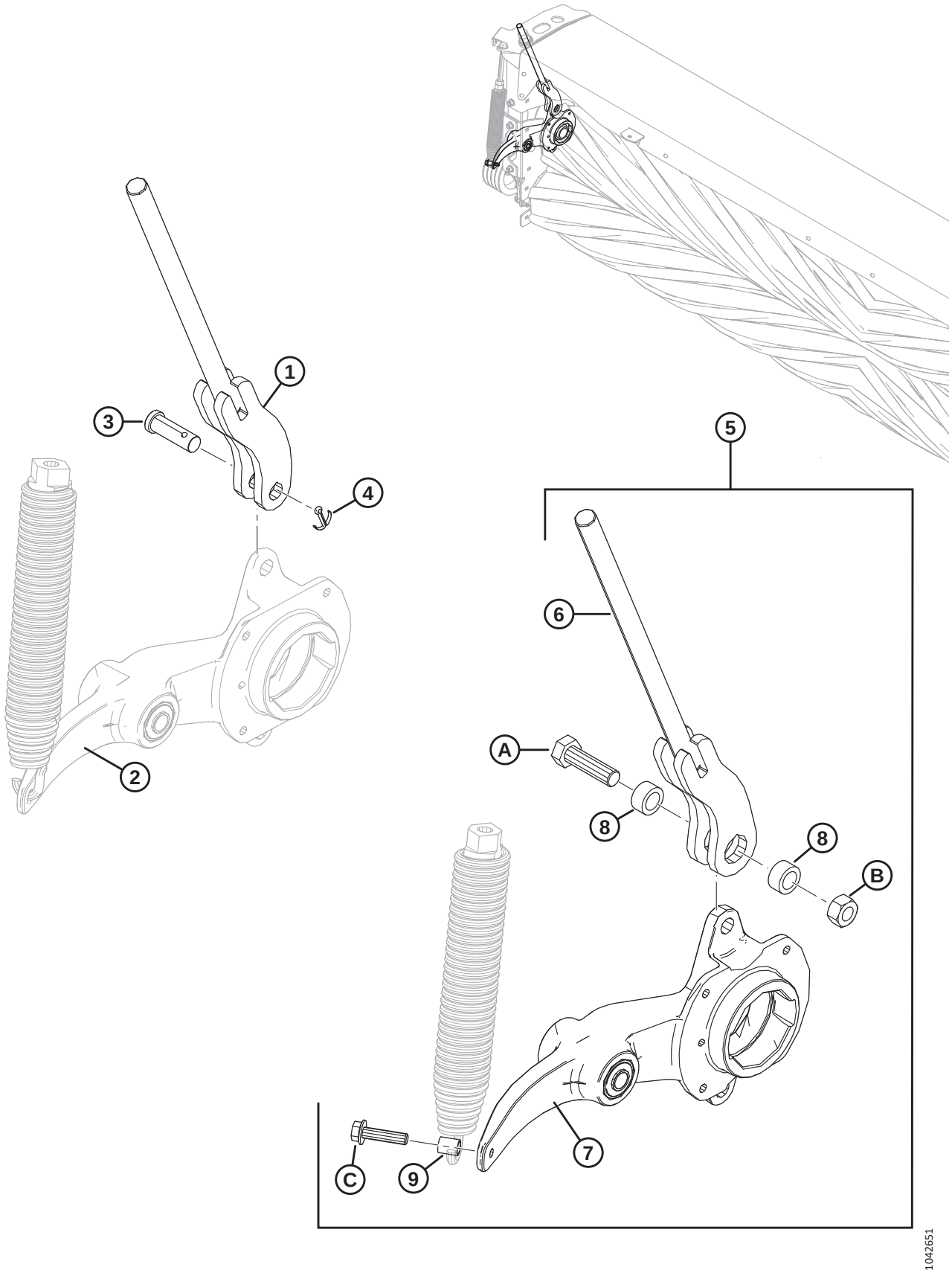

## ROLL CONDITIONER – ROLL ARMS AND STOPS

| Ref | Part Number | Description | Qty | Serial Number |
|---|---|---|---|---|
| 1 | 247259 | STOP – WELDT [77] | 1 | 285420–486189 |
| 2 | REF | ARM – ROLL, C/W BUSHING [78] | 1 | 285420–486189 |
| 3 | 18620 | PIN – CLEVIS [79] | 1 | 285420–486189 |
| 4 | 18648 | PIN – COTTER 3/16 DIA X 1.25 ZP [79] | 1 | 285420–486189 |
| 5 | 259622 | KIT – ROLL STOP W/ BUSHING R1 [78] | 1 | 285420–486189 |
| 6 | 259621 | STOP – WELDT [80] | 1 | 486190– |
| 7 | 359253 | ARM – ROLL - C/W BUSHING [81] | 1 | 486190– |
| 8 | 325857 | TUBE – PIVOT | 2 | 486190– |
| 9 | 338003 | SPACER – ROLL ARM | 1 | 486190– |
| | | | | |
| A | 136717 | BOLT – HEX HD M16 X 2 X 55-10.9 | | 486190– |
| B | 320208 | NUT – HEX CTR LOCK M16 X 2-12-ZINC | | 486190– |
| C | 152947 | BOLT – HEX FLG HD TFL M10 X 1.5 X 40-10.9-AA1J | | 486190– |

77. Service part for model year 2023 and prior headers that haven't already been updated with roll stop kit (MD #259622). Stop MD #247259 is secured to the roll arm using a clevis pin.
78. If you are replacing the superseded roll arm (MD #247828) on model year 2023 and prior headers, you need to order Roll Stop kit (MD #259622), which includes roll arm (MD #359253), roll stop (MD #259621), and hardware. The superseded roll arm is identified by the spring hooking directly into the hole in the arm.
79. Used on the model year 2023 and prior roll stop (MD #247259).
80. Used on model year 2024 and later headers. Stop MD #259621 is secured to the arm using a bolt, nut, and two bushings.
81. Includes roll arm (NSS), bolt (MD #152947), spacer (MD #338003), and two bushings (MD #222658). This roll arm is identified by the spring hooking around the bolt and spacer.

# 17 Roll Conditioner – Gear Drive Service Parts

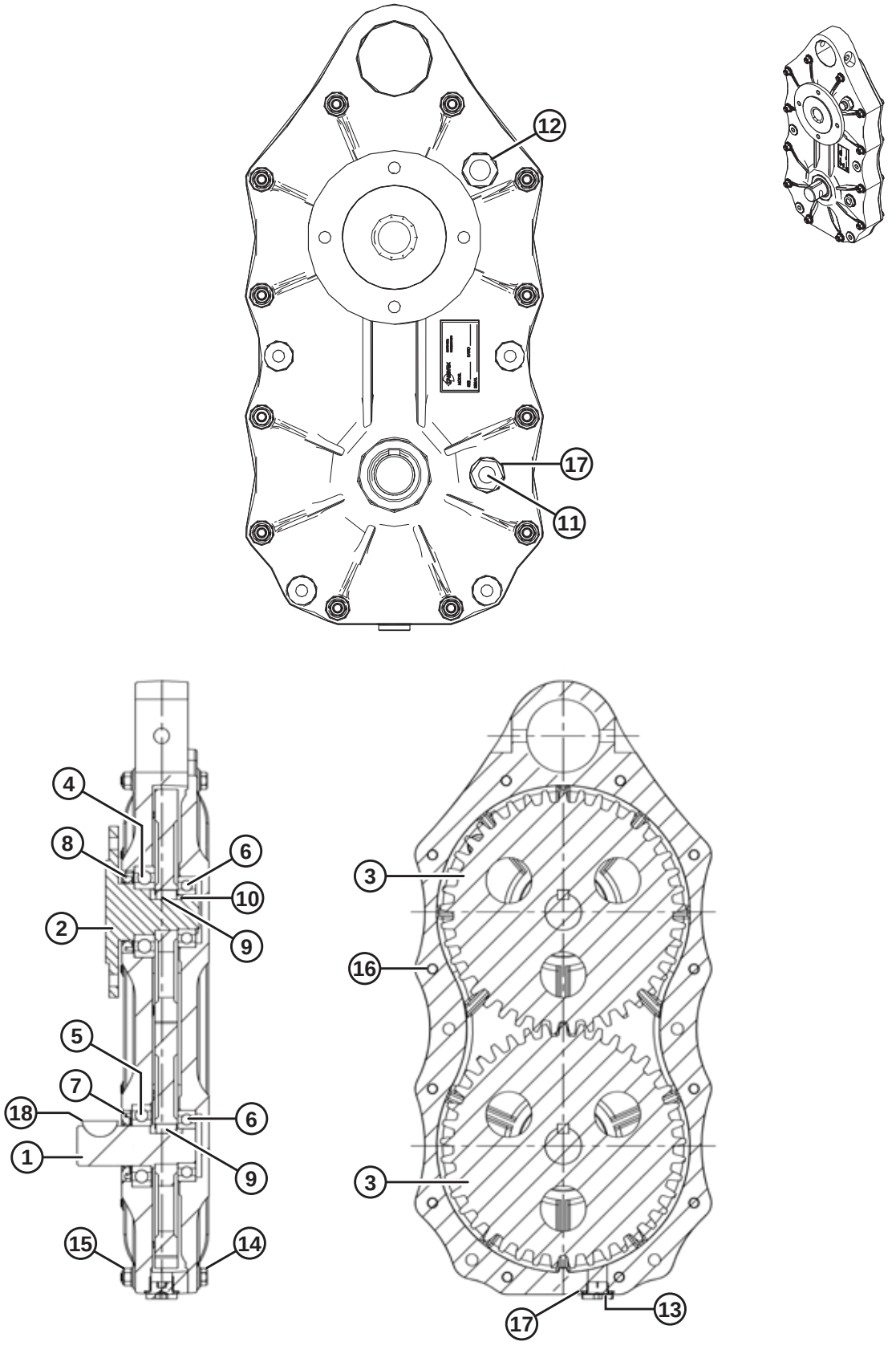

## ROLL CONDITIONER – GEAR DRIVE SERVICE PARTS

| Ref | Part Number | Description | Qty | Serial Number |
|---|---|---|---|---|
| | 307211 | DRIVE – GEAR (CONDITIONER ROLL TIMING) [82] | | |
| 1 | 247183 | SHAFT – INPUT | 1 | |
| 2 | 247184 | SHAFT – OUTPUT, 4 BOLT FLANGE | 1 | |
| 3 | 247185 | GEAR – SPUR | 2 | |
| 4 | 247186 | BEARING – OUTPUT SHAFT | 1 | |
| 5 | 247187 | BEARING – INPUT SHAFT | 1 | |
| 6 | 247188 | BEARING | 2 | |
| 7 | 247189 | SEAL – INPUT SHAFT | 1 | |
| 8 | 247190 | SEAL – OUTPUT SHAFT | 1 | |
| 9 | 247191 | KEY – 10 X 8 X 18L, HARDENED | 2 | |
| 10 | 247192 | RING – SNAP | 1 | |
| 11 | 247193 | PLUG – OIL LEVEL, 1/2 BSPP | 1 | |
| 12 | 247194 | BREATHER – 1/2 BSPP | 1 | |
| 13 | 247195 | PLUG – DRAIN, 1/2 BSPP | 1 | |
| 14 | 247196 | BOLT – M8 X 70 | 12 | |
| 15 | 247197 | NUT – M8 | 12 | |
| 16 | 247199 | PIN – 6 X 12L | 1 | |
| 17 | 247265 | WASHER – 21.5 X 26 X 2T | 1 | |
| 18 | 30836 | KEY – WOODRUFF (3/8 X 1 1/4 NOM) | 1 | |

82. Refer to Section *14 Roll Conditioner – Polyurethane/Steel (2015), page 41* or *15 Roll Conditioner – Polyurethane/Steel (2016 and Later), page 45*.

# 18 Roll Conditioner – Shields

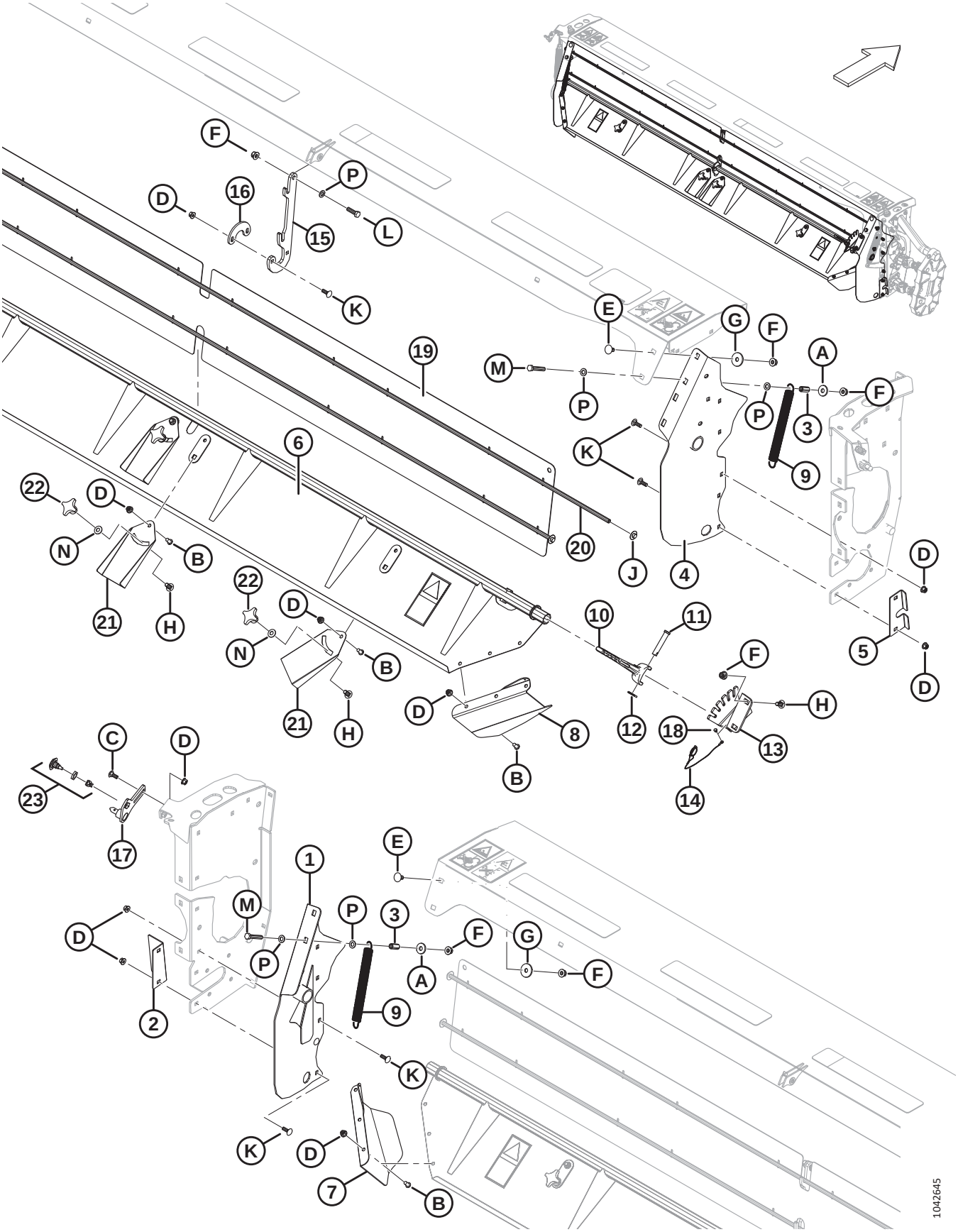

## ROLL CONDITIONER – SHIELDS

| Ref | Part Number | Description | Qty | Serial Number |
|---|---|---|---|---|
| 1 | 281338 | DEFLECTOR – LH WELDT | 1 | |
| 2 | 224039 | SHIELD – LH | 1 | |
| 3 | 17675 | SPACER | 2 | |
| 4 | 281339 | DEFLECTOR – RH WELDT | 1 | |
| 5 | 223014 | SHIELD – RH | 1 | |
| 6 | 247576 | BAFFLE – C/W DECALS, ROLL COND. [83] | 1 | |
| 7 | 281582 | DEFLECTOR – LH | 1 | |
| 8 | 281583 | DEFLECTOR – RH | 1 | |
| 9 | 246175 | SPRING – EXTENSION | 2 | |
| 10 | 281818 | HANDLE – BAFFLE, MACHINED | 1 | |
| 11 | 19958 | PIN – CLEVIS | 1 | |
| 12 | 18648 | PIN – COTTER 3/16 DIA X 1.25 ZP | 1 | |
| 13 | 246224 | BRACKET | 1 | |
| 14 | 135945 | LYNCH PIN – C/W LANYARD 3/16 PIN | 1 | |
| 15 | 247323 | HOOK – BAFFLE SUPPORT | 1 | |
| 16 | 224977 | PLATE | 1 | |
| 17 | **246226** | **STUD – WELDMENT** | **1** | |
| 18 | 113799 | RIVET – POP | **2** | |
| 19 | 247275 | CURTAIN – CONDITIONER | 1 | |
| 20 | 247433 | LINE – HYDRAULIC, 1/2 IN DIA., 3315 MM LG | 2 | |
| 21 | 224869 | FIN – BAFFLE | 4 | |
| 22 | 246355 | KNOB – PLASTIC, M12 | 4 | |
| 23 | **320524** | **ASSY – LATCH 3MM SLOT** [84] | **2** | |
| | | | | |
| A | 4761 | WASHER – FLAT | | |
| B | 135723 | BOLT – BUTTON HD HEX SOCKET ZP M10 X 20 | | |
| C | 135785 | BOLT – RHSN M10 X 1.5 X 25-8.8-A3L | | |
| D | 135799 | NUT – HEX FLG CTR LOC M10 X 1.5-10-A3L | | |
| E | 135903 | BOLT – RHSN M12 X 1.75 X 25-8.8-A3L | | |
| F | 136431 | NUT – HEX FLG CTR LOC M12 X 1.75-10-A3L | | |
| G | 166747 | WASHER – FLAT, 12.95 MM ID, 45 MM OD, 4.5 MM THK | | |
| H | 152439 | BOLT – RHSSN M12 X 1.75 X 25-8.8-A3L | | |
| J | 252219 | NUT – PUSH ON CAP 1/2 STUD | | |
| K | 184662 | BOLT – RHSN TFL M10 X 1.5 X 30-8.8-A3L | | |
| L | 184669 | BOLT – HEX HD M12 X 1.75 X 40-8.8-A3L | | |
| M | 184675 | BOLT – HEX HD M12 X 1.75 X 70-8.8-A3L | | |
| N | 184596 | WASHER – CON SPRING M12 A STL SAE 1050-1075 | | |
| P | 184714 | WASHER – FLAT REG M12-300HV-A3L | | |

83. Includes decal (MD #190546).
84. Includes latch (NSS), tolerance clip (NSS), and latch nut (NSS).

# 19 Roll Conditioner – Header Attachment

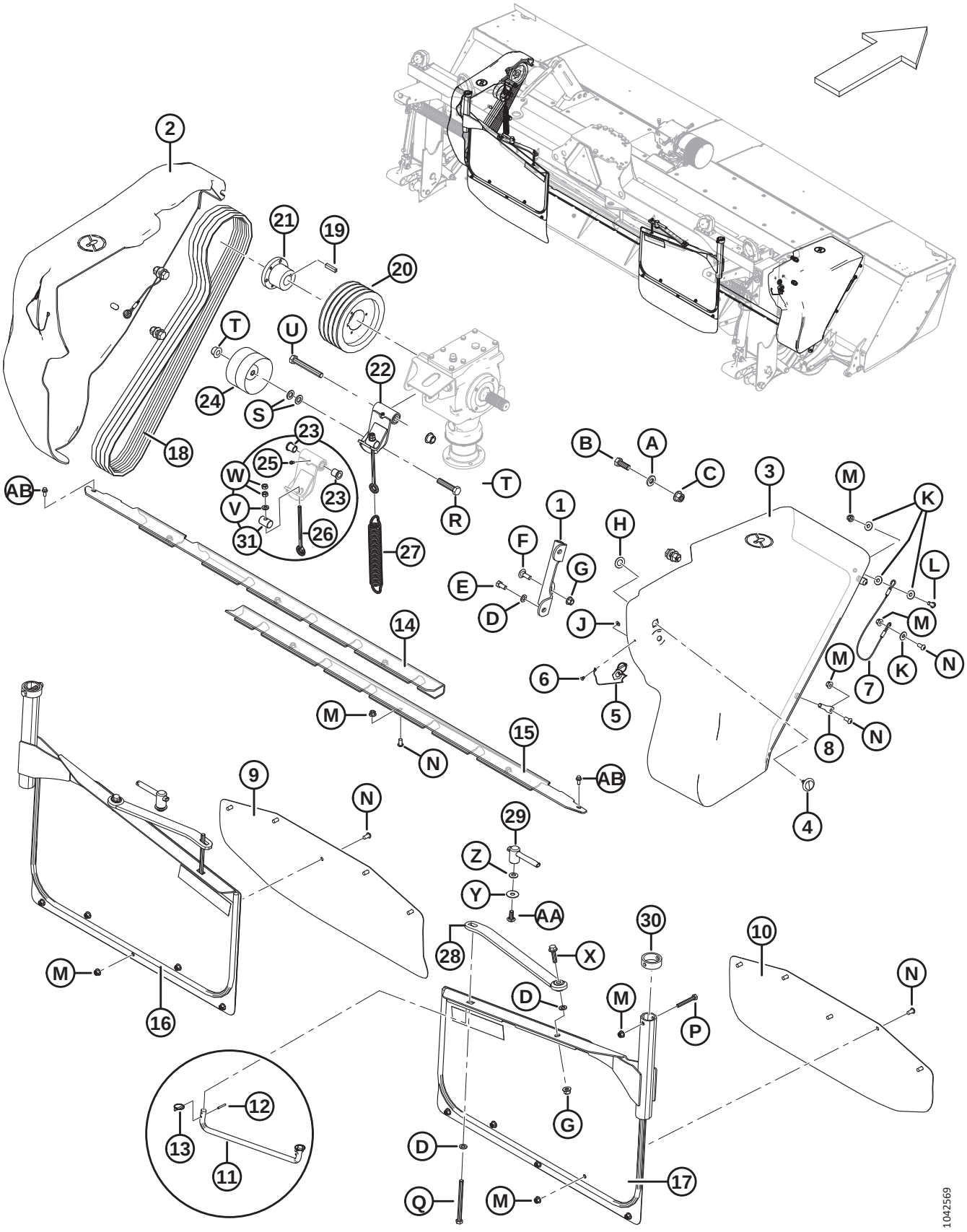

## ROLL CONDITIONER – HEADER ATTACHMENT

| Ref | Part Number | Description | Qty | Serial Number |
|---|---|---|---|---|
| 1 | 238054 | BRACKET – LOWER GEAR BOX MOUNT | 1 | |
| 2 | 257093 | SHIELD ASSEMBLY – LH [85] | 1 | |
| 3 | 224562 | SHIELD ASSEMBLY – RH [86] | 1 | |
| 4 | 135815 | LATCH – 3 MM SLOT [87] | 2 | |
| 5 | 246583 | LYNCH PIN – C/W LANYARD 3/16 PIN | 2 | |
| 6 | 113799 | RIVET – POP | 2 | |
| 7 | 224605 | CABLE – SHIELD ANCHOR | 2 | |
| 8 | 112624 | PIN – RETAINER | 2 | |
| 9 | 224762 | SHIELD | 1 | |
| 10 | 224761 | SHIELD | 1 | |
| 11 | 224986 | ROD – ASSEMBLY (2015 ONLY) | 2 | 266820–285419 |
| 12 | 13617 | PIN – SPRING 3/16 DIA X 1.25 LG (2015 ONLY) | 4 | 266820–285419 |
| 13 | 50193 | PIN – LYNCH (2015 ONLY) | 4 | 266820–285419 |
| 14 | 256640 | PLATE – DEFLECTOR, LH (2020 AND LATER) [88] | 1 | 371190– |
| | 256192 | PLATE – DEFLECTOR, LH (2019 AND PRIOR) [89] | 1 | –371189 |
| 15 | 256641 | PLATE – DEFLECTOR, RH (2020 AND LATER) [88] | 1 | 371190– |
| | 256199 | PLATE – DEFLECTOR, RH (2019 AND PRIOR) [89] | 1 | –371189 |
| 16 | 223443 | DEFLECTOR – LH ASSEMBLY, C/W REFLECTOR | 1 | |
| | 115146 | REFLECTOR – AMBER | | |
| 17 | 223444 | DEFLECTOR – RH ASSEMBLY, C/W REFLECTOR | 1 | |
| | 115146 | REFLECTOR – AMBER | | |
| 18 | 222028 | BELT – CONDITIONER DRIVE [90] | 1 | |
| 19 | 246424 | KEY – 10 MM X 8 MM X 45 MM | 1 | |
| 20 | 246846 | PULLEY – 4 HB | 1 | |
| 21 | 246845 | BUSHING | 1 | |
| 22 | 281695 | **KIT – BELT TENSIONER** [91] | 1 | |
| 23 | 221997 | BUSHING – FLANGED 16 X 22 X 25L | 2 | |
| 24 | 149183 | PULLEY – IDLER | 1 | |
| 25 | 7782 | FITTING – LUBRICATION 1/4-28 TAPER THD | 1 | |
| 26 | 281986 | BOLT – EYE, **192 MM LG** [92] | 1 | |
| 27 | 245966 | SPRING – EXTENSION | 1 | |

85. Includes lynch pin (MD #246583), pop rivet (MD #113799), and cable (MD #224605). MD #224561 can be used on R1 Series Rotary Disc Pull-Types until stock is depleted.
86. Includes lynch pin (MD #246583), pop rivet (MD #113799), and cable (MD #224605).
87. Order latch (MD #135815) until stock is depleted; then order latch assembly (MD #320524), which includes latch (NSS), tolerance clip (NSS), and latch nut (NSS).
88. Used to service all model year 2020 and later R116.
89. Used to service all R113, and model year 2019 and prior R116.
90. Matched set of four belts.
91. The kit includes tensioner weldment (NSS), two bushings (MD #221997), two hex nuts (MD #30505), washer (MD #30655), straight pin (MD #281644), grease fitting (MD #7782), grease decal (MD #23164), and 230 mm eye bolt (MD #281685). Use a 192 mm eye bolt (MD #281986) on a roll conditioner instead of the 230 mm eye bolt included in the kit.
92. Belt tensioner kit (MD #281695) includes a 230 mm eye bolt (MD #281685), but use the 192 mm eye bolt (MD #281986) on a roll conditioner.

## ROLL CONDITIONER – HEADER ATTACHMENT

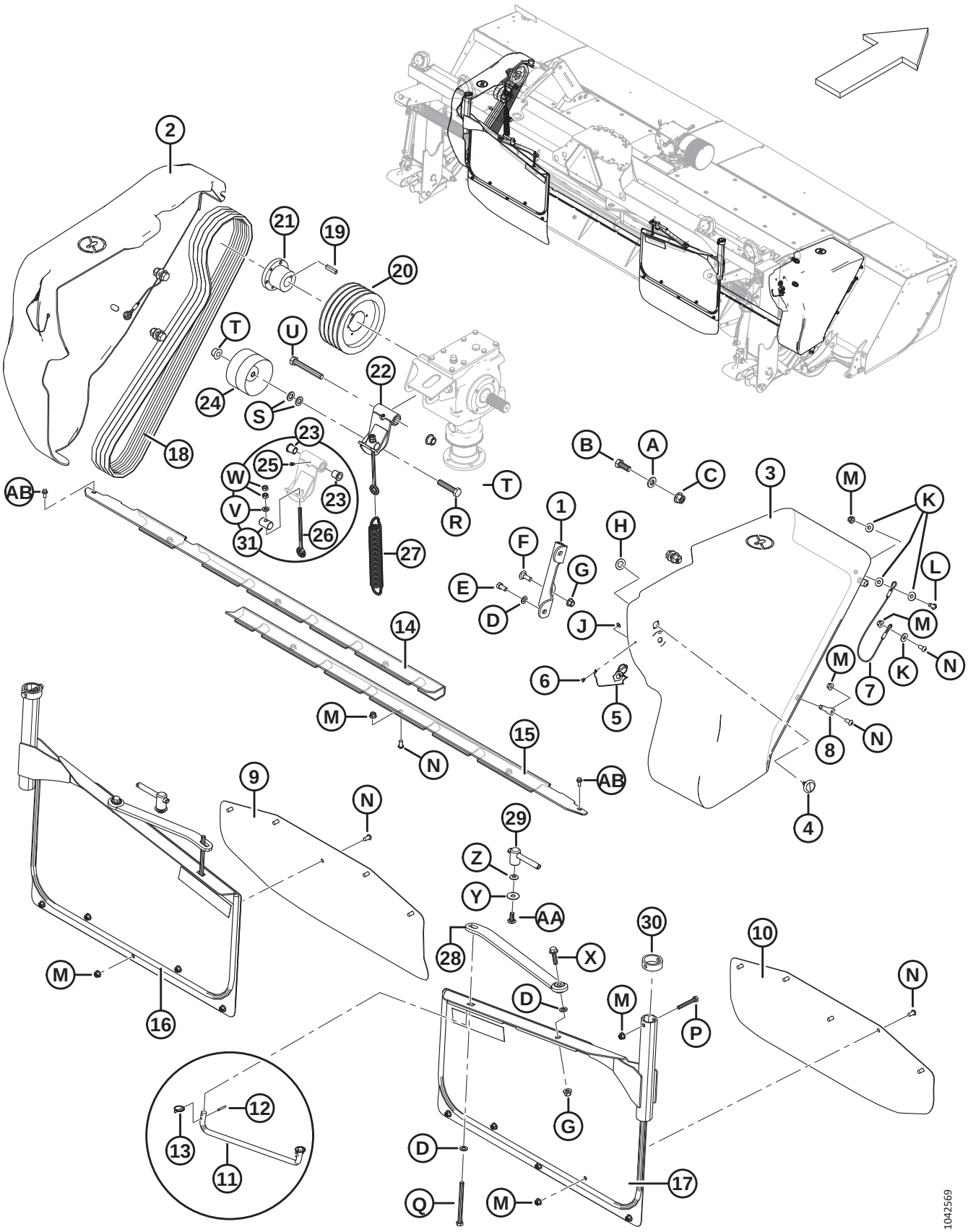

| Ref | Part Number | Description | Qty | Serial Number |
|---|---|---|---|---|
| 28 | 247445 | BAR – ADJUSTMENT, WELDMENT | 2 | |
| 29 | 247693 | HANDLE – ASSEMBLY | 2 | |
| 30 | 257112 | TUBE – CAP | 2 | |
| 31 | **281644** | **PIN – STRAIGHT** | **1** | |
| | | | | |
| A | 320226 | WASHER – HARD M16-300HV-ZINC | | |
| B | 111528 | BOLT – HEX HD TFL M16 X 2 X 40-8.8-A3L | | |
| C | 136440 | NUT – HEX FLG CTR LOC M16 X 2-10-A3L | | |
| D | 184714 | WASHER – FLAT REG M12-300HV-A3L | | |
| E | 50155 | BOLT – HEX HD TFL M12 X 1.75 X 25-8.8-A3L | | |
| F | 136291 | BOLT – RHSN TFL M12 X 1.75 X 35-8.8-A3L | | |
| G | 136431 | NUT – HEX FLG CTR LOC M12 X 1.75-10-A3L | | |
| H | 5113 | WASHER – FLAT | | |
| J | 184701 | WASHER – FLAT LARGE M5-200HV-A2L | | |
| K | 30635 | WASHER – FLAT REG M10 ZP | | |
| L | 135852 | SCREW – HEX SOC BTN HD M10 X 1.5 X 25-12.9-A3L | | |
| M | 135799 | NUT – HEX FLG CTR LOC M10 X 1.5-10-A3L | | |
| N | 135723 | BOLT – BUTTON HD HEX SOCKET ZP M10 X 20 | | |
| P | 184659 | BOLT – HEX HD M10 X 1.5 X 75-8.8-A3L | | |
| Q | 135696 | BOLT – HEX HD M12 X 1.75 X 150-8.8-A3L | | |
| R | 181511 | BOLT – HEX HD M16 X 2 X 75-10.9-A3L | | |
| S | 184717 | WASHER – FLAT REG M16-200HV-A3L [93] | | |
| T | 152520 | NUT – HEX FLG TECH LOC M16 X 2-10-A3L | | |
| U | 184678 | BOLT – HEX HD M16 X 2 X 120-8.8-A3L | | |
| V | 30655 | WASHER – HARDENED | | |
| W | 30505 | NUT – HEX M10 X 1.5-10-A3L | | |
| X | 148799 | BOLT – HEX FLG HD M12 X 1.75 X 45-10.9-A3L | | |
| Y | 32247 | WASHER – FLAT | | |
| Z | 184596 | WASHER – CON SPRING M12 A STL SAE 1050-1075 | | |
| AA | 152702 | BOLT – RHSSN M12 X 1.75 X 30-8.8-A3L | | |
| AB | 136300 | BOLT – HEX FLG HD TFL M8 X 1.25 X 20-8.8-AA3L | | 371190– |

93. Use one or two washers (MD #184717) between pulley (MD #149183) and tensioner weldment (NSS) as required to align the belt drive.

# 20 Finger Conditioner

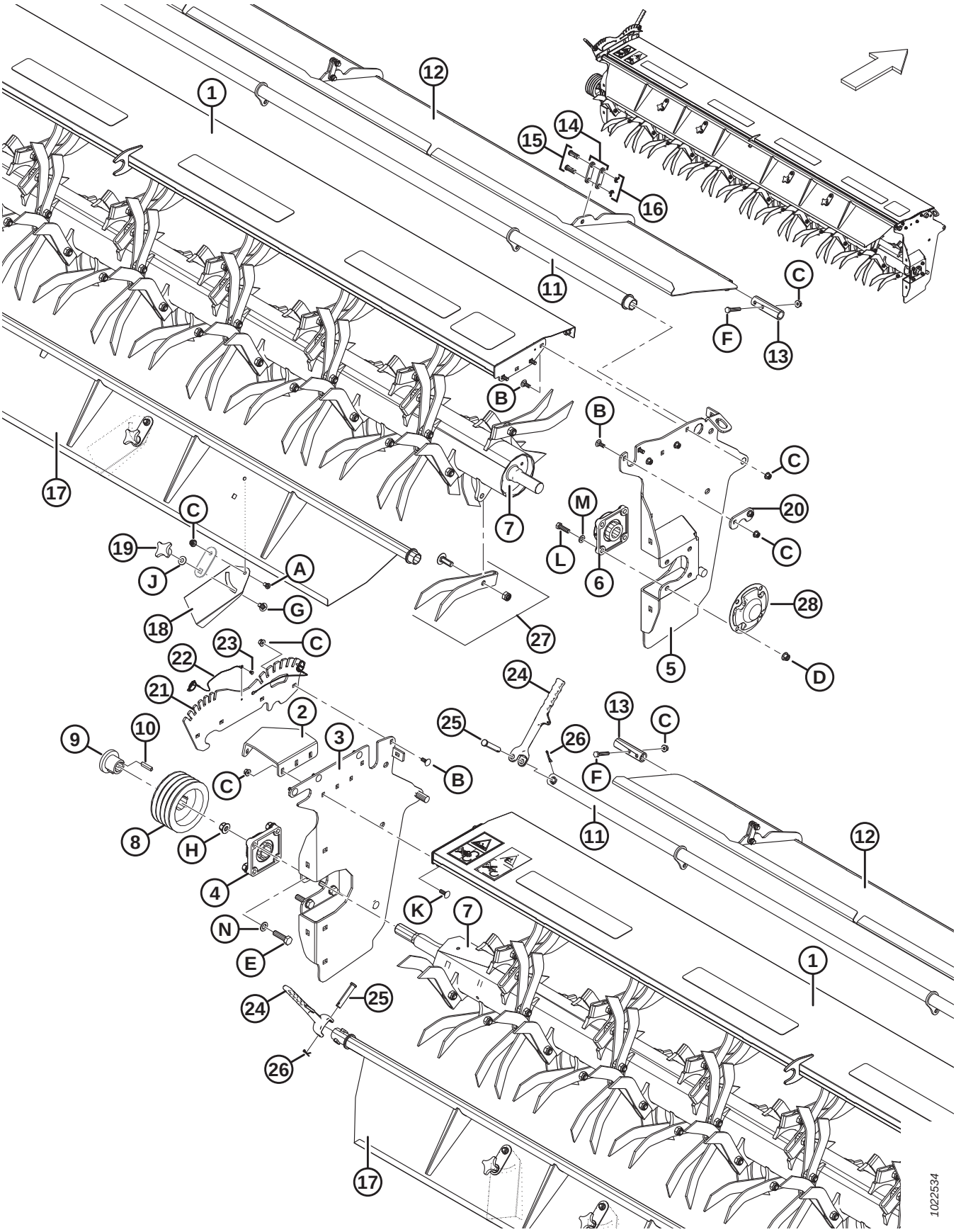

## FINGER CONDITIONER

| Ref | Part Number | Description | Qty | Serial Number |
|---|---|---|---|---|
| 1 | 246841 | ASSEMBLY – FINGER COVER C/W DECALS | 1 | |
| 2 | 224560 | BRACKET – LH | 1 | |
| 3 | 224556 | LH PANEL – C/W DECALS | 1 | |
| 4 | 221769 | HOUSING – FLANGED | 1 | |
| 5 | 224557 | RH PANEL – C/W DECALS | 1 | |
| 6 | 221716 | HOUSING – FLANGED | 1 | |
| 7 | 281784 | ASSEMBLY – FINGER ROTOR | 1 | |
| 8 | 246847 | PULLEY – 4 HB | 1 | |
| 9 | 246844 | BUSHING | 1 | |
| 10 | 246424 | KEY – 10 MM X 8 MM X 45 MM | 1 | |
| 11 | 223370 | TUBE – SUB WELDMENT | 1 | |
| 12 | 223973 | BAFFLE – WELDMENT, FINGER CONDITIONER | 1 | |
| 13 | 223371 | TUBE – DRILLED | 2 | |
| 14 | 222042 | PLATE – LINK | 6 | |
| 15 | 187133 | PIN – CLEVIS | 6 | |
| 16 | 18605 | PIN – COTTER 1/8 DIA X 1 ZP | 6 | |
| 17 | 247575 | BAFFLE – WELDMENT, C/W DECALS | 1 | |
| 18 | 224869 | FIN – BAFFLE | 4 | |
| 19 | 246355 | KNOB – PLASTIC, M12 | 4 | |
| 20 | 223500 | PLATE | 1 | |
| 21 | 247863 | ASSEMBLY – BAFFLE ADJUSTMENT PLATE, C/W DECAL | 1 | |
| 22 | 135945 | LYNCH PIN – C/W LANYARD 3/16 PIN | 2 | |
| 23 | 113799 | RIVET – POP | 2 | |
| 24 | 281818 | HANDLE – BAFFLE, MACHINED | 2 | |
| 25 | 19958 | PIN – CLEVIS | 2 | |
| 26 | 18648 | PIN – COTTER 3/16 DIA X 1.25 ZP | 2 | |
| 27 | 281782 | KIT – FLAIL FINGER WITH HW [94] | A/R | |
| | 281783 | FINGER – CONDITIONER | | |
| | 281780 | BOLT – RH SHLDR M14 X 2 X 40-12.9 | | |
| | 281781 | NUT – HEX NYLOC M14 CLASS 8 | | |
| 28 | 247684 | COVER | 1 | |
| | | | | |
| A | 135723 | BOLT – BUTTON HD HEX SOCKET ZP M10 X 20 | | |
| B | 135785 | BOLT – RHSN M10 X 1.5 X 25-8.8-A3L | | |
| C | 135799 | NUT – HEX FLG CTR LOC M10 X 1.5-10-A3L | | |
| D | 136431 | NUT – HEX FLG CTR LOC M12 X 1.75-10-A3L | | |
| E | 184681 | BOLT – HEX HD M16 X 2 X 50-8.8-AA1J | | |
| F | 152193 | BOLT – HEX HD M10 X 1.5 X 55 X 8.8-A3L | | |
| G | 152439 | BOLT – RHSSN M12 X 1.75 X 25-8.8-A3L | | |
| H | 136440 | NUT – HEX FLG CTR LK M16 X 2-10-AA1J | | |
| J | 184596 | WASHER – CON SPRING M12A STL SAE 1050-1075 | | |
| K | 184662 | BOLT – RHSN TFL M10 X 1.5 X 30-8.8-A3L | | |

94. Kit includes six conditioner fingers (MD #281783), six M14 shoulder bolts (MD #281780), and six M14 hex nuts (MD #281781).

## FINGER CONDITIONER

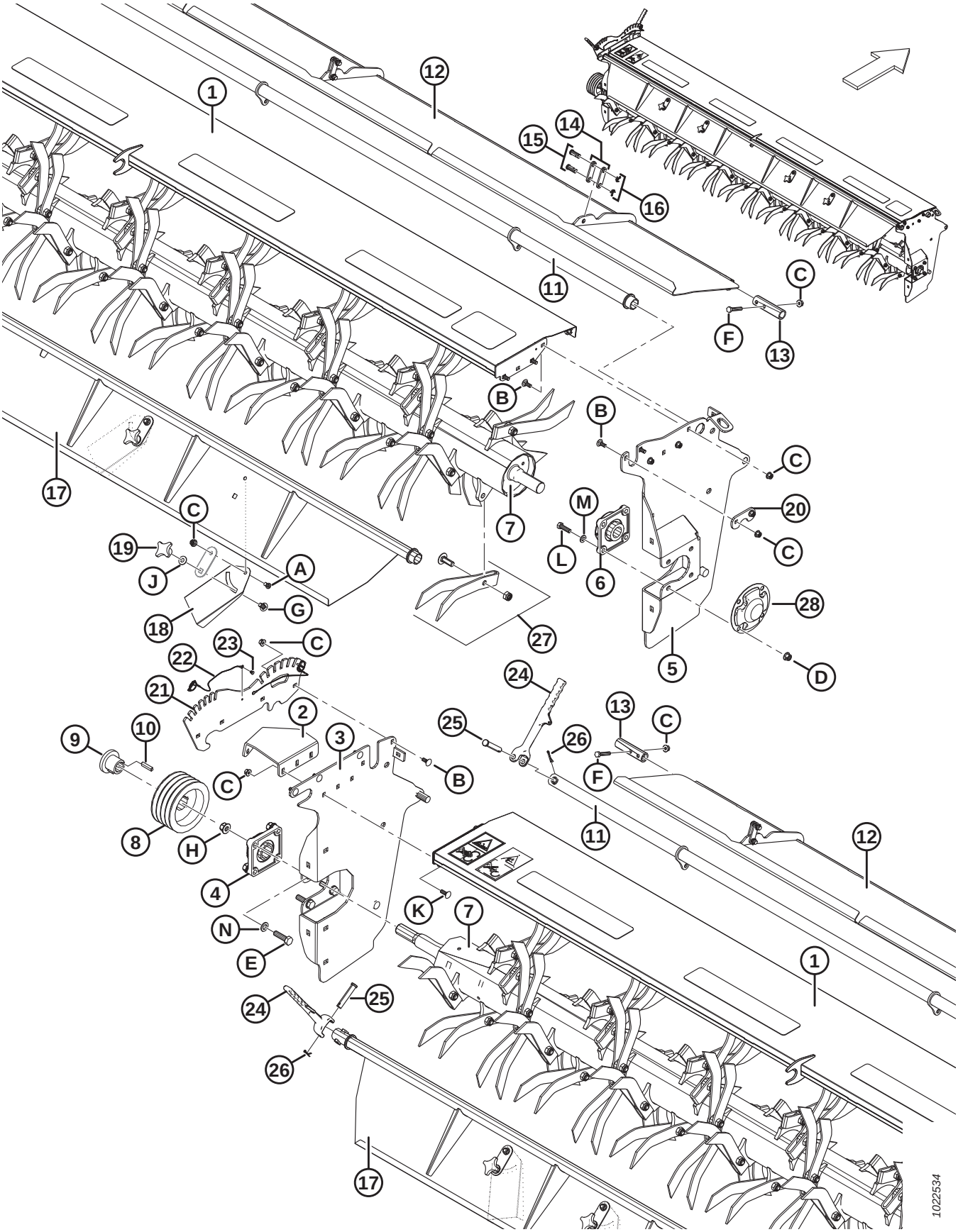

## FINGER CONDITIONER

| Ref | Part Number | Description | Qty | Serial Number |
|---|---|---|---|---|
| L | 136881 | BOLT – HEX HD M12 X 1.75 X 45-10.9-A3L | | |
| M | 184714 | WASHER – FLAT REG M12-300HV-A3L | | |
| N | 184717 | WASHER – FLAT REG M16-200HV-A3L | | |

# 21 Finger Conditioner – Shields

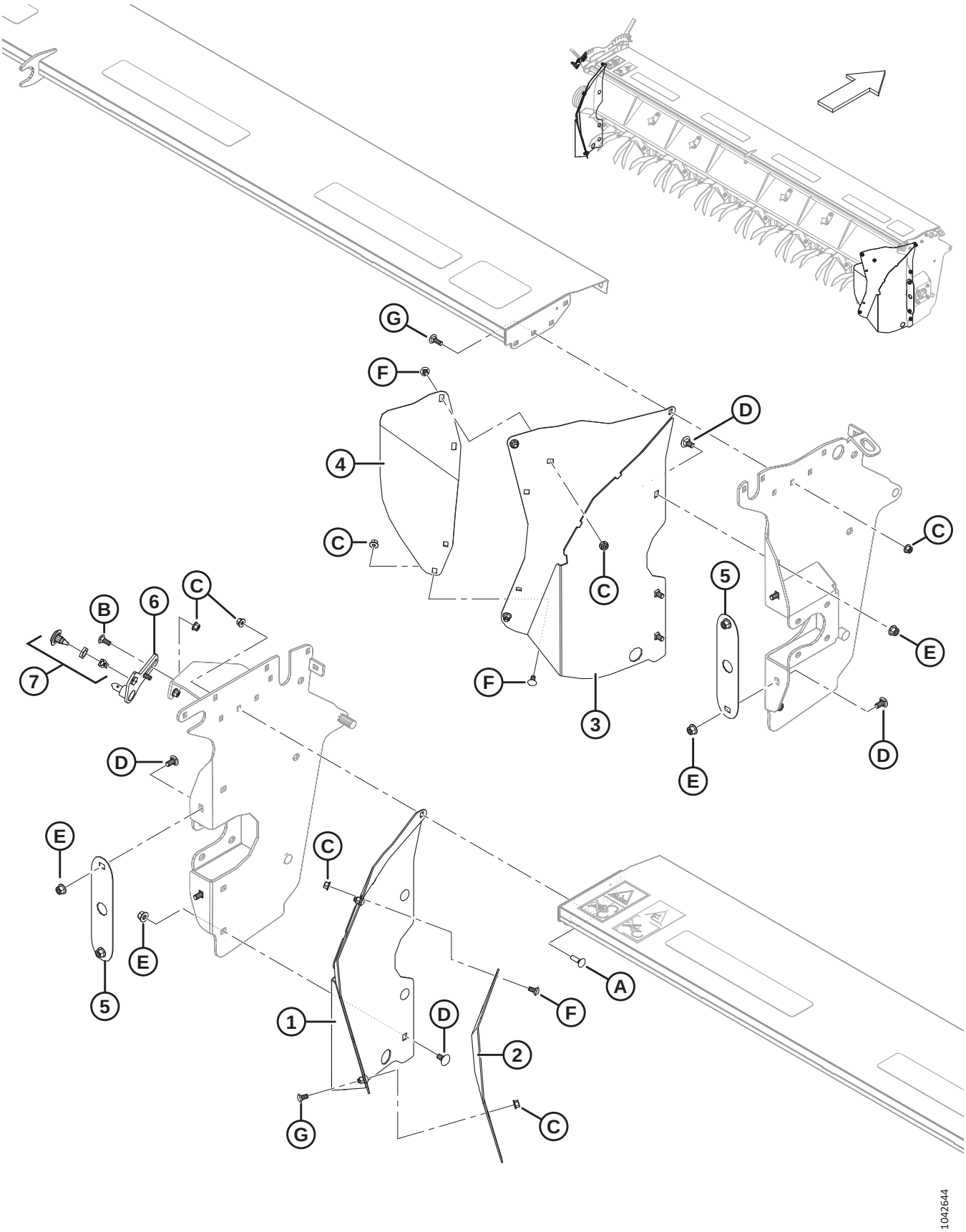

## FINGER CONDITIONER – SHIELDS

| Ref | Part Number | Description | Qty | Serial Number |
|---|---|---|---|---|
| 1 | 224861 | DEFLECTOR – LH WELDMENT | 1 | |
| 2 | 246363 | EXTENSION – DEFLECTOR, LH | 1 | |
| 3 | 224862 | DEFLECTOR – RH WELDMENT | 1 | |
| 4 | 246364 | EXTENSION – DEFLECTOR, RH | 1 | |
| 5 | 223889 | PLATE – SHIELD | 2 | |
| 6 | **246226** | **STUD – WELDMENT** | **1** | |
| 7 | **320524** | **ASSY – LATCH 3MM SLOT** [95] | **2** | |
| | | | | |
| A | 135691 | BOLT – RHSN TFL M10 X 1.5 X 35-8.8-A3L | | |
| B | 135785 | BOLT – RHSN M10 X 1.5 X 25-8.8-A3L | | |
| C | 135799 | NUT – HEX FLG CTR LOC M10 X 1.5-10-A3L | | |
| D | 135903 | BOLT – RHSN M12 X 1.75 X 25-8.8-A3L | | |
| E | 136431 | NUT – HEX FLG CTR LOC M12 X 1.75-10-A3L | | |
| F | 184657 | BOLT – RHSSN M10 X 1.5 X 20-8.8-A3L | | |
| G | 184662 | BOLT – RHSN TFL M10 X 1.5 X 30-8.8-A3L | | |

95. Includes latch (NSS), tolerance clip (NSS), and latch nut (NSS).

# 22 Finger Conditioner – Header Attachment

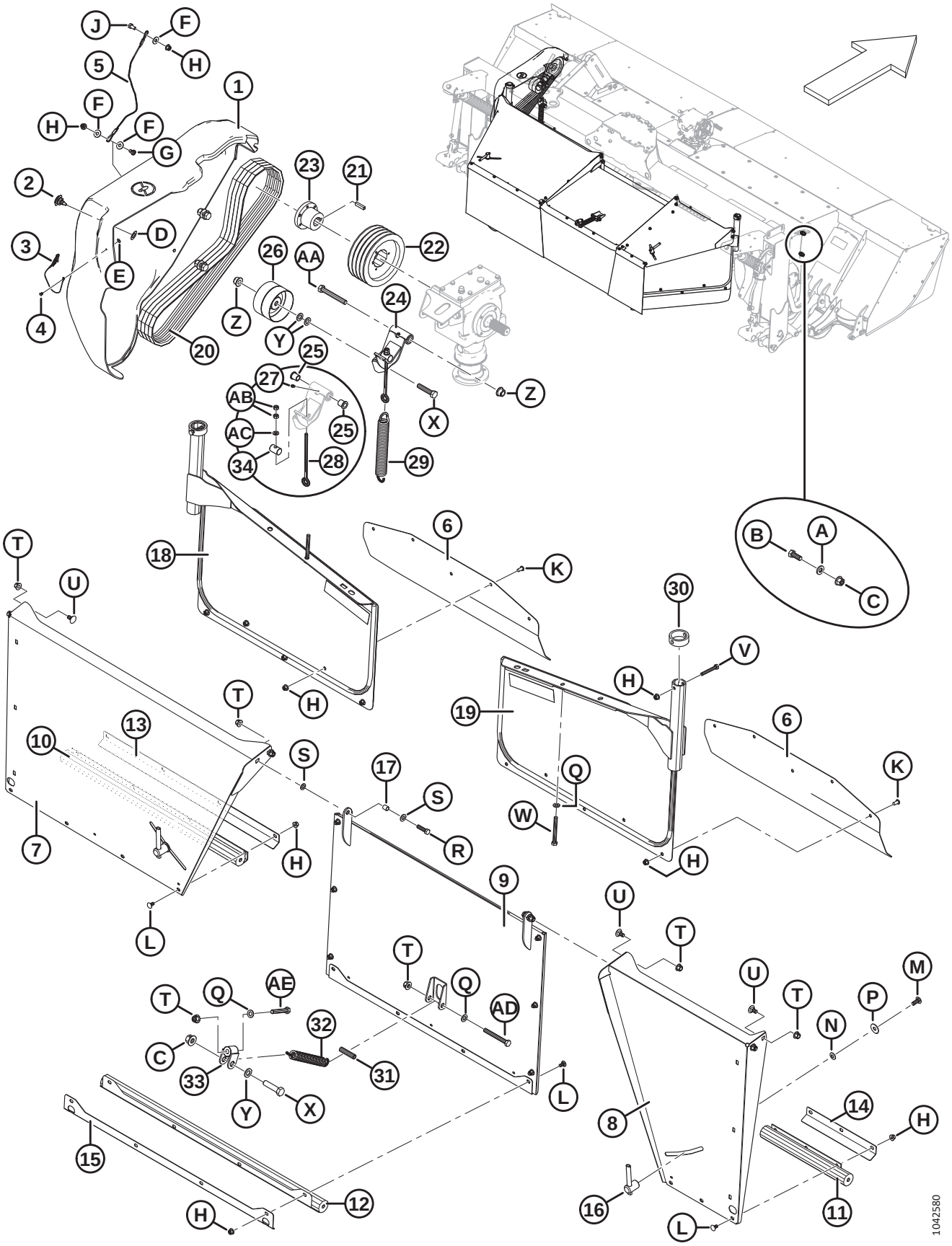

## FINGER CONDITIONER – HEADER ATTACHMENT

| Ref | Part Number | Description | Qty | Serial Number |
|---|---|---|---|---|
| 1 | 257093 | SHIELD ASSEMBLY – LH [96] | 1 | |
| 2 | 135815 | LATCH – 3 MM SLOT [97] | 1 | |
| 3 | 246583 | LYNCH PIN – C/W LANYARD 3/16 PIN | 1 | |
| 4 | 113799 | RIVET – POP | 1 | |
| 5 | 224605 | CABLE – SHIELD ANCHOR | 1 | |
| 6 | 224892 | SHIELD – EXTENSION | 2 | |
| 7 | 247971 | COVER – TOP LH, C/W DECAL | 1 | |
| 8 | 247572 | COVER – RH, C/W DECAL | 1 | |
| 9 | 259294 | COVER – DOOR, C/W DECAL | 1 | |
| 10 | 247374 | SHIELD – LH CURTAIN | 1 | |
| 11 | 246023 | SHIELD – CURTAIN, RH | 1 | |
| 12 | 247373 | SHIELD – CURTAIN, CENTER | 1 | |
| 13 | 247377 | PLATE – CLAMP, LH | 1 | |
| 14 | 246013 | PLATE – CLAMP, RH | 1 | |
| 15 | 247376 | PLATE – CLAMP, CENTER | 1 | |
| 16 | 247693 | HANDLE – ASSEMBLY | 2 | |
| 17 | 224313 | SPACER | 2 | |
| 18 | 223443 | DEFLECTOR – LH ASSEMBLY, C/W REFLECTOR | 1 | |
| | 115146 | REFLECTOR – AMBER | | |
| 19 | 223444 | DEFLECTOR – RH ASSEMBLY, C/W REFLECTOR | 1 | |
| | 115146 | REFLECTOR – AMBER | | |
| 20 | 222029 | BELT – FLAIL CONDITIONER DRIVE | 1 | |
| 21 | 246424 | KEY – 10 MM X 8 MM X 45 MM | 1 | |
| 22 | 246846 | PULLEY – 4 HB | 1 | |
| 23 | 246845 | BUSHING | 1 | |
| 24 | **281695** | **KIT – BELT TENSIONER** [98] | **1** | |
| 25 | 221997 | BUSHING – FLANGED 16 X 22 X 25L | 2 | |
| 26 | 149183 | PULLEY – IDLER | 1 | |
| 27 | 7782 | FITTING – LUBRICATION 1/4-28 TAPER THD | 1 | |
| 28 | 281685 | BOLT – EYE | 1 | |
| 29 | 245966 | SPRING – EXTENSION | 1 | |
| 30 | 257112 | TUBE – CAP | 2 | |
| 31 | 247634 | SPACER (2015 ONLY) | 1 | 272420–285419 |
| 32 | 9423 | SPRING – EXTENSION, 216 MM LG, 35 MM DIA | 1 | |
| 33 | 247631 | JOINT – WELDMENT | 1 | |
| 34 | **281644** | **PIN – STRAIGHT** | **1** | |
| | | | | |
| A | 320226 | WASHER – HARD M16-300HV-ZINC | | |

96. Includes lynch pin (MD #246583), pop rivet (MD #113799), and cable (MD #224605).
97. Order latch (MD #135815) until stock is depleted; then order latch assembly (MD #320524), which includes latch (NSS), tolerance clip (NSS), and latch nut (NSS).
98. The kit includes tensioner weldment (NSS), two bushings (MD #221997), two hex nuts (MD #30505), washer (MD #30655), straight pin (MD #281644), grease fitting (MD #7782), grease decal (MD #23164), and 230 mm eye bolt (MD #281685).

## FINGER CONDITIONER – HEADER ATTACHMENT

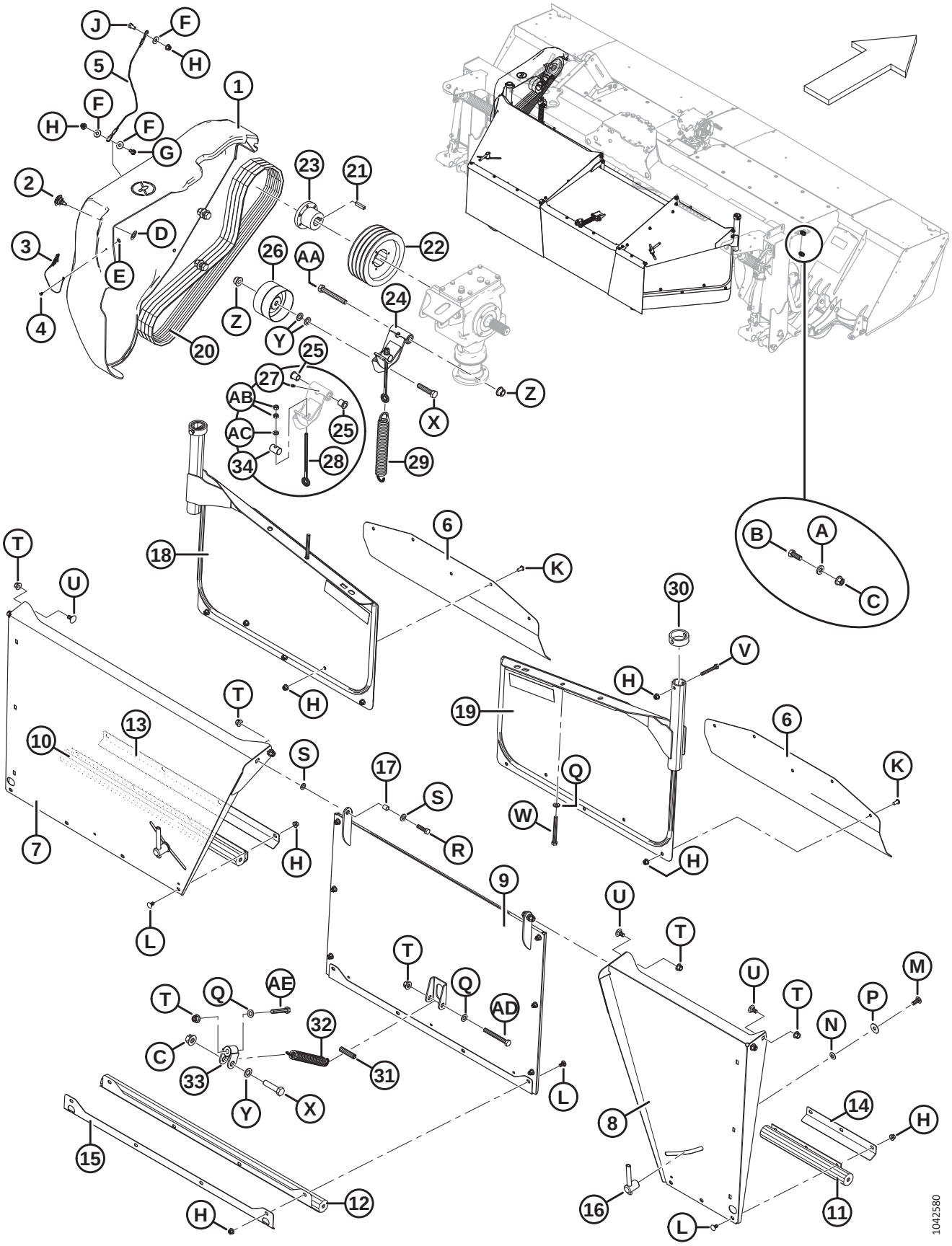

| Ref | Part Number | Description | Qty | Serial Number |
|---|---|---|---|---|
| B | 111528 | BOLT – HEX HD TFL M16 X 2 X 40-8.8-A3L | | |
| C | 136440 | NUT – HEX FLG CTR LOC M16 X 2-10-A3L | | |
| D | 5113 | WASHER – FLAT | | |
| E | 184701 | WASHER – FLAT LARGE M5-200HV-A2L | | |
| F | 30635 | WASHER – FLAT REG M10 ZP | | |
| G | 135852 | SCREW – HEX SOC BTN HD M10 X 1.5 X 25-12.9-A3L | | |
| H | 135799 | NUT – HEX FLG CTR LOC M10 X 1.5-10-A3L | | |
| J | 136148 | BOLT – HEX HD TFL M10 X 1.5 X 20-8.8-BO | | |
| K | 135723 | BOLT – BUTTON HD HEX SOCKET ZP M10 X 20 | | |
| L | 184657 | BOLT – RHSSN M10 X 1.5 X 20-8.8-A3L | | |
| M | 152702 | BOLT – RHSSN M12 X 1.75 X 30-8.8-A3L | | |
| N | 184596 | WASHER – CON SPRING M12A STL SAE 1050-1075 | | |
| P | 32247 | WASHER – FLAT | | |
| Q | 184717 | WASHER – FLAT REG M16-200HV-AA1J (2016 AND LATER) | | 285420– |
| | 184714 | WASHER – FLAT REG M12-300HV-A3L (2015 ONLY) | | 266820–285419 |
| R | 136881 | BOLT – HEX HD M12 X 1.75 X 45-10.9-A3L | | |
| S | 135369 | WASHER – HARDENED | | |
| T | 136440 | NUT – HEX FLG CTR LOC M16 X 2-10-A3L (2016 AND LATER) | | 285420– |
| | 136431 | NUT – HEX FLG CTR LOC M12 X 1.75-10-A3L (2015 ONLY) | | 266820–285419 |
| U | 135903 | BOLT – RHSN M12 X 1.75 X 25-8.8-A3L | | |
| V | 184659 | BOLT – HEX HD M10 X 1.5 X 75-8.8-A3L | | |
| W | 136423 | BOLT – HEX HD M12 X 1.75 X 110-8.8-A3L | | |
| X | 181511 | BOLT – HEX HD M16 X 2 X 75-10.9-A3L | | |
| Y | 184717 | WASHER – FLAT REG M16-200HV-A3L [99] | | |
| Z | 152520 | NUT – HEX FLG TECH LOC M16 X 2-10-A3L | | |
| AA | 184678 | BOLT – HEX HD M16 X 2 X 120-8.8-A3L | | |
| AB | 30505 | NUT – HEX M10 X 1.5-10-A3L | | |
| AC | 30655 | WASHER – HARDENED | | |
| AD | 197161 | BOLT – HEX HD M16 X 2.0 X 100-8.8-A3L (2016 AND LATER) | | 285420– |
| | 184672 | BOLT – HEX HD M12 X 1.75 X 100-10.9-A3L (2015 ONLY) | | 266820–285419 |
| AE | 184675 | BOLT – HEX HD M12 X 1.75 X 70-8.8-A3L | | |

99. Use one or two washers (MD #184717) between pulley (MD #149183) and tensioner weldment (NSS) as required to align the belt drive.

# 23 No Conditioner Option – Shields

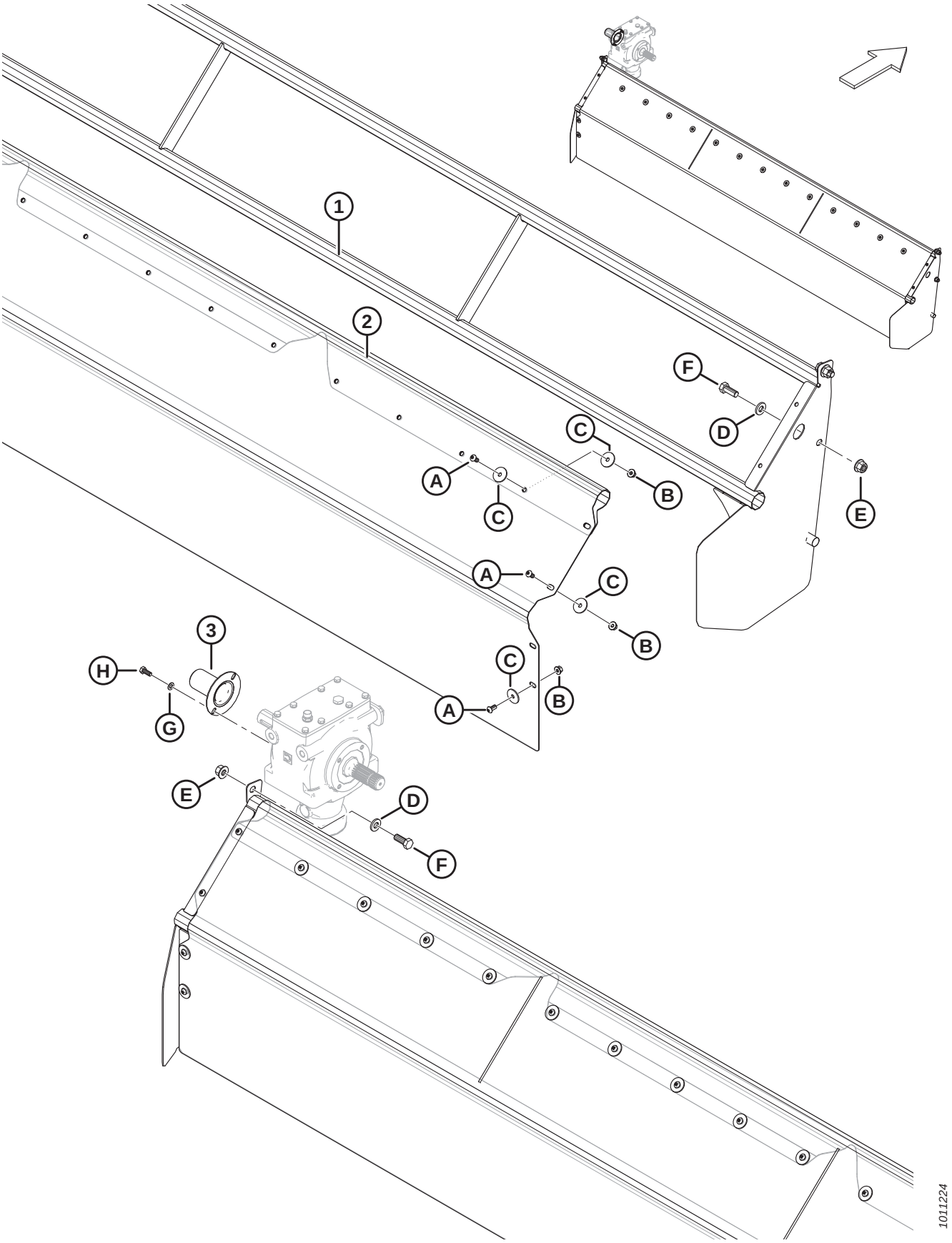

## NO CONDITIONER OPTION – SHIELDS

| Ref | Part Number | Description | Qty | Serial Number |
|---|---|---|---|---|
| 1 | 224327 | FRAME – NO COND SHIELDS, WELDMENT | 1 | |
| 2 | 224320 | SHIELD – CURTAIN | 1 | |
| 3 | 246581 | COVER – SHAFT | 1 | |
| | | | | |
| A | 135723 | BOLT – BUTTON HD HEX SOCKET ZP M10 X 20 | | |
| B | 135799 | NUT – HEX FLG CTR LOC M10 X 1.5-10-A3L | | |
| C | 136428 | WASHER – FLAT LARGE M10-200HV-A3L | | |
| D | 320226 | WASHER – HARD M16-300HV-ZINC | | |
| E | 136440 | NUT – HEX FLG CTR LOC M16 X 2-10-A3L | | |
| F | 111528 | BOLT – HEX HD TFL M16 X 2 X 40-8.8-A3L | | |
| G | 184712 | WASHER – FLAT LARGE M10-200HV-A3L | | |
| H | 30627 | BOLT – HEX HD TFL M10 X 1.5 X 25-8.8-A3L | | |

# 24 Carrier Frame Components

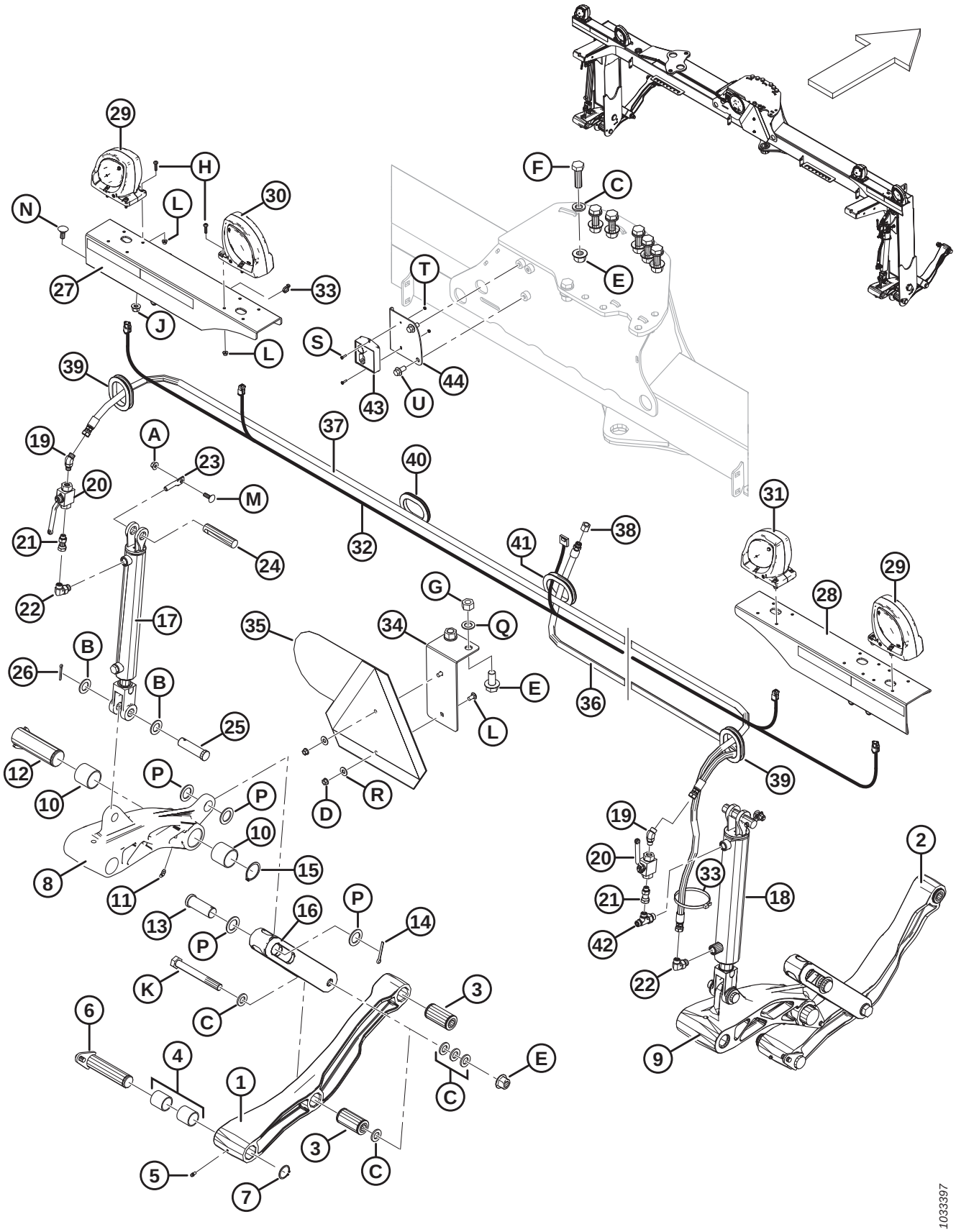

## CARRIER FRAME COMPONENTS

**NOTE:**

For specific electrical harness parts, refer to Electrical Connector Parts Catalog (MD #169641).

| Ref | Part Number | Description | Qty | Serial Number |
|---|---|---|---|---|
| 1 | 223333 | ASSEMBLY – LH LIFT ARM [100] | 1 | |
| 2 | 223334 | ASSEMBLY – RH LIFT ARM [100] | 1 | |
| 3 | 246198 | BUSHING – RUBBER | 4 | |
| 4 | 281457 | BUSHING | 4 | |
| 5 | 7782 | FITTING – LUBRICATION 1/4-28 TAPER THD | 2 | |
| 6 | 247800 | PIN – WELDT, LIFT ARM | 2 | |
| 7 | 247110 | RING – RETAINING EXTERNAL, PLATED | 2 | |
| 8 | 238178 | ASSEMBLY – WHEEL ARM LH [101] | 1 | |
| 9 | 238179 | ASSEMBLY – WHEEL ARM RH [101] | 1 | |
| 10 | 281458 | BUSHING – WHEEL ARM | 4 | |
| 11 | 21301 | FITTING – LUBRICATION, 45° | 2 | |
| 12 | 247801 | PIN – WELDT, WHEEL ARM | 2 | |
| 13 | 281101 | PIN – CLEVIS | 2 | |
| 14 | 18609 | PIN – COTTER 1/4 DIA X 2 ZP | 2 | |
| 15 | 247111 | RING – EXT RETAINING, PLATED | 2 | |
| 16 | 223321 | LINK – FLOAT, CAST | 2 | |
| 17 | 223427 | CYLINDER – HYDRAULIC (LH) [102] | 1 | |
| | 247015 | SEAL KIT | | |
| | 320289 | BREATHER – #8 ORB | | |
| 18 | 223425 | CYLINDER – HYDRAULIC (RH) [103] | 1 | |
| | 247014 | SEAL KIT | | |
| 19 | 136144 | FITTING – ELBOW 45° HYD | 2 | |
| | 50219 | O-RING – SAE #6 | | |
| | 135865 | O-RING – #6 ORFS | | |
| 20 | **238222** | **VALVE – BALL** | **2** | |
| 21 | 136147 | FITTING – CONNECTOR HYD | 2 | |
| | 50219 | O-RING – SAE #6 | | |
| 22 | 136149 | FITTING – ELBOW 90° HYD C/W O-RING | 2 | |
| | 44209 | O-RING – SAE #8 | | |
| | 135865 | O-RING – #6 ORFS | | |
| 23 | 112624 | PIN – RETAINER | 2 | |
| 24 | 142376 | PIN – CYLINDER | 2 | |
| 25 | 102265 | PIN – CLEVIS | 2 | |
| 26 | 18608 | PIN – COTTER 3/16 DIA X 1.5 ZP | 2 | |
| 27 | 223181 | BRACKET – LIGHT, LH [104] | 1 | |
| 28 | 223180 | BRACKET – LIGHT, RH [104] | 1 | |

100. Includes rubber bushing (MD #246198), bushing (MD #281457), and lube fitting (MD #7782).
101. Includes two bushings (MD #281458) and lube fitting (MD #21301). For model year 2020 and prior units, a new spindle (MD #238193) must also be ordered when servicing LH or RH wheel arm assemblies.
102. LH cylinder; hose (MD #247106) is required if Road Friendly Transport™ is installed.
103. RH cylinder.
104. Includes reflectors (MD #115145, 115147).

## CARRIER FRAME COMPONENTS

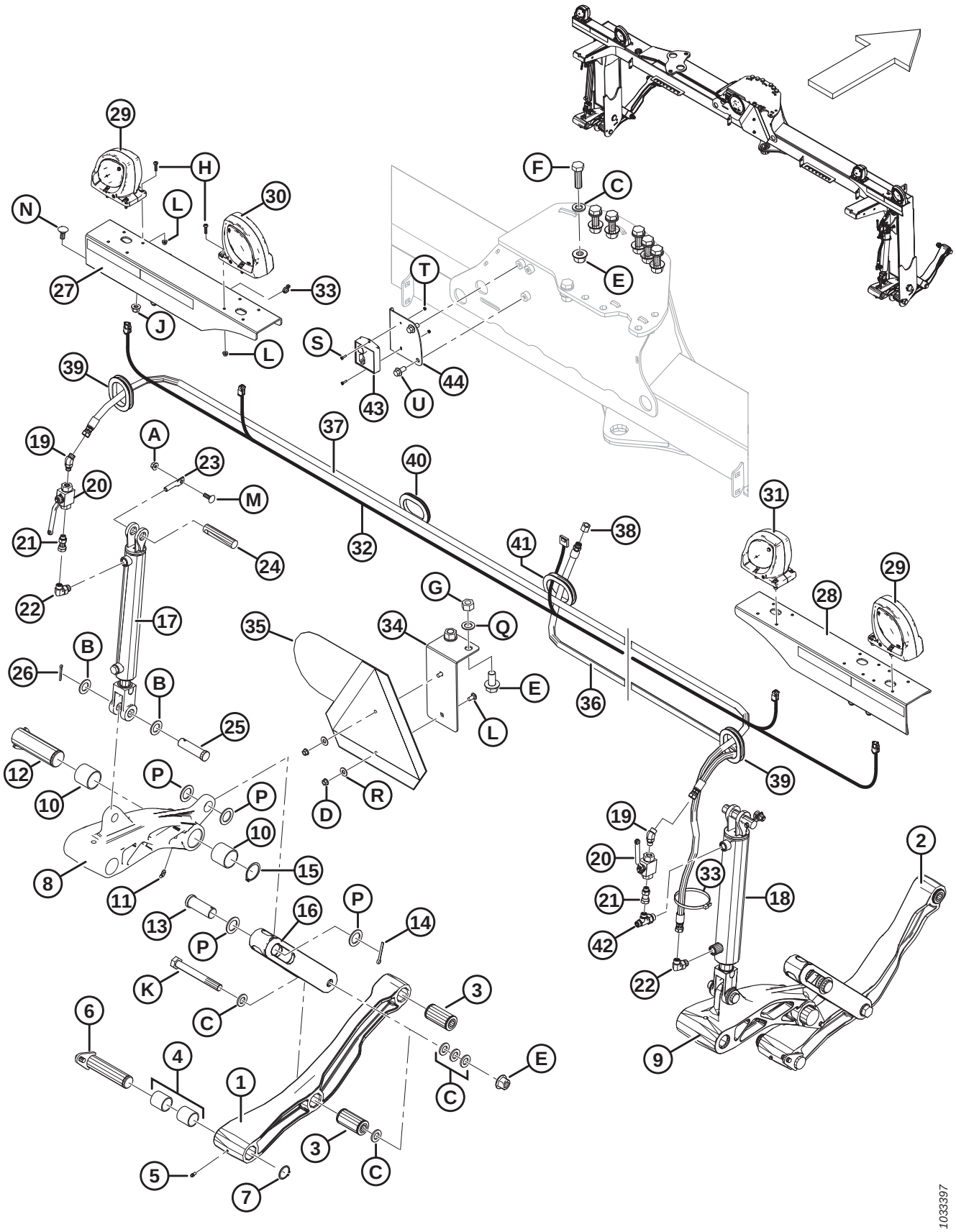

| Ref | Part Number | Description | Qty | Serial Number |
|---|---|---|---|---|
| 29 | 203547 | LAMP – CLEARANCE, DT CONNECTOR | 2 | |
| 30 | 203548 | LAMP – LH TAIL, DT CONNECTOR | 1 | |
| 31 | 203549 | LAMP – RH TAIL, DT CONNECTOR | 1 | |
| 32 | 281613 | HARNESS – WIRING, LAMPS | 1 | 321190– |
| | 247883 | HARNESS – WIRING, LAMPS [105] | 1 | –321189 |
| 33 | 21763 | FASTENER – CABLE TIE (BLACK) | 6 | |
| 34 | 259201 | SUPPORT – SMV, SIS (2019 AND LATER) | 1 | 346190– |
| | 223537 | SUPPORT – SMV (2018 AND PRIOR) | 1 | –346189 |
| 35 | 258262 | ASSY – BRACKET W/ SMV AND SIS [106] | 1 | 346190– |
| 36 | 224166 | HOSE – HYD, 2800 MM LG | 1 | |
| 37 | 224167 | HOSE – HYD, 4925 MM LG | 1 | |
| 38 | 136325 | CAP – HYD SAE, 6 ORFS | 1 | |
| 39 | 223543 | SEAL – EDGE TRIM | 2 | |
| 40 | 223544 | SEAL – EDGE TRIM | 1 | |
| 41 | 223545 | SEAL – EDGE TRIM | 1 | |
| 42 | 136453 | FITTING – TEE HYD | 1 | |
| 43 | 281700 | MODULE – TRANSPORT LIGHTING [107] | 1 | 321190– |
| 44 | 281813 | SUPPORT – MODULE [107] | 1 | 321190– |
| | | | | |
| A | 50101 | NUT – HEX FLG STVR LOC M10 X 1.5-10-A3L | | |
| B | 156743 | WASHER – FLAT | | |
| C | 112130 | WASHER – HARDENED | | |
| D | 135799 | NUT – HEX FLG CTR LOC M10 X 1.5-10 | | |
| E | 136122 | NUT – HEX FLG CTR LOC M20 X 2.5-10-AA1J | | |
| F | 136157 | BOLT – HEX HD M20 X 2.5 X 65-10.9-A3L | | |
| G | 136124 | NUT – HEX M20 X 2.5-10-AA1J | | |
| H | 136252 | SCREW – PAN HD M6 X 25 X 8-4.8-H-A2L | | |
| J | 136431 | NUT – HEX FLG CTR LOC M12 X 1.75-10-A3L | | |
| K | 136650 | BOLT – HEX HD M20 X 2.5 X 170-8.8-A3L | | |
| L | 184657 | BOLT – RHSSN M10 X 1.5 X 20-8.8-AA1J | | |
| M | 184662 | BOLT – RHSN TFL M10 X 1.5 X 30-8.8-A3L | | |
| N | 184667 | BOLT – RHSN M12 X 1.75 X 30-8.8-A3L | | |
| P | 146487 | WASHER – HARDENED FLAT 1 1/4 NOM. ID | | |
| Q | 136477 | WASHER – FLAT REG M20 - 200HV | | |
| R | 18670 | WASHER – FLAT SAE 7/16 ID X 1.0 IN OD AA1J | | |
| S | 136313 | SCREW – PAN HD M4 X 0.7X16-4.8-AA1J | | |
| T | 30855 | NUT – HEX M4 X 0.7-8-AA1J | | |
| U | 136399 | BOLT – HEX FLG HD TFL M12 X 1.75 X 25-8.8-AA1J | | |

105. Service part only for units made prior to 2018. For units made in 2018 and later, order MD #281613.
106. Includes SMV decal MD #115148. For SIS decals, refer to Section *32 Decals and Reflectors, page 95*.
107. Transport lighting module (MD #281700) and support (MD #281813) are installed on model year 2018 and later units only. For model year 2017 and prior units, transport lighting module (MD #171068) is installed on the hitch. Refer to Section *28 Hitch – Hydraulic/Electrical, page 83*.

# 25 Carrier Wheels

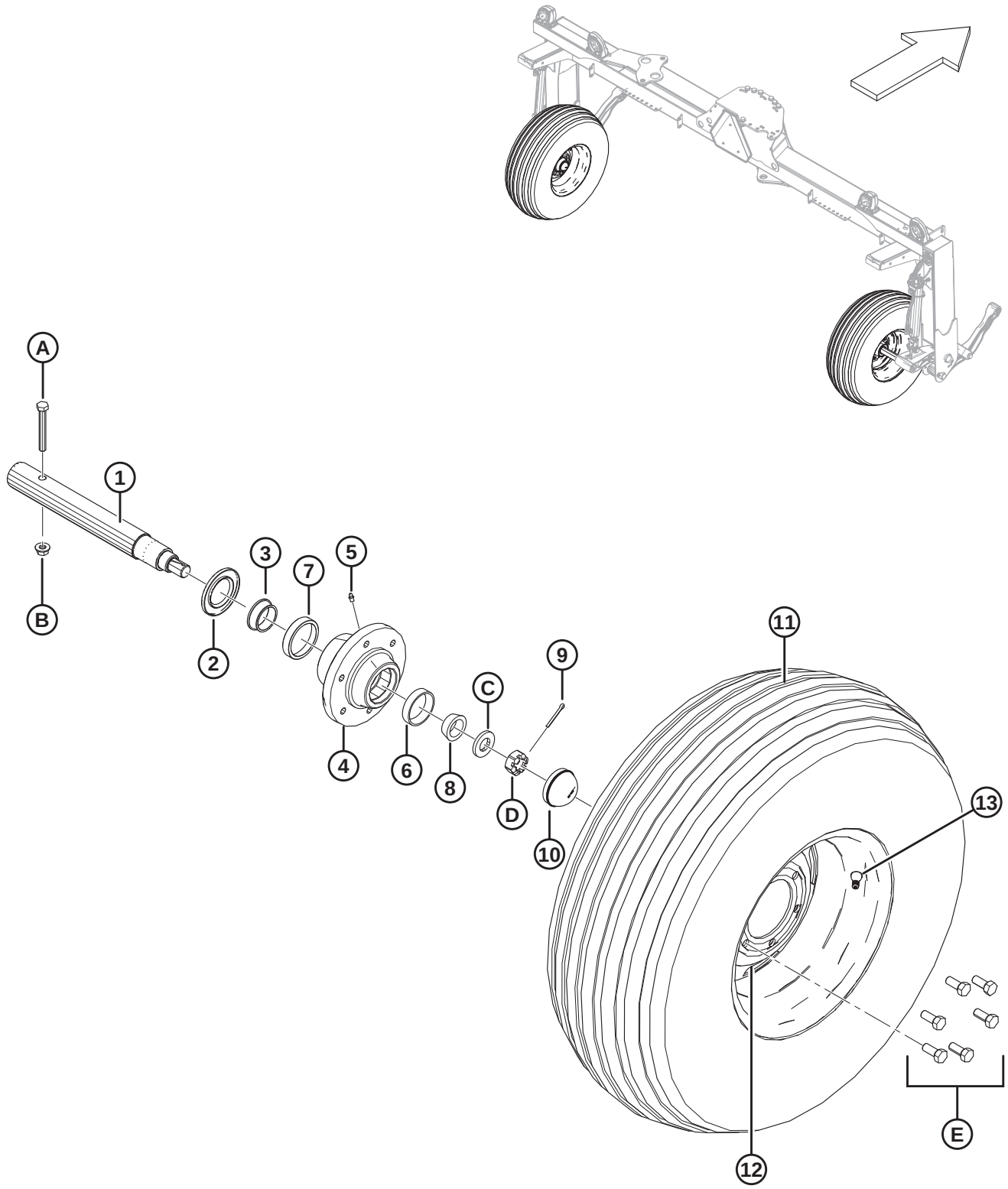

## CARRIER WHEELS

| Ref | Part Number | Description | Qty | Serial Number |
|---|---|---|---|---|
| 1 | 238193 | SPINDLE | 2 | |
| 2 | 140248 | SEAL – GREASE | 2 | |
| 3 | 140247 | BEARING – CONE ROLLER | 2 | |
| 4 | 140246 | HUB – C/W BEARING CUPS AND GREASE FITTING [108] | 2 | |
| 5 | 50174 | FITTING – LUBRICATION DRIVE TYPE | 2 | |
| 6 | 30701 | BEARING – CUP | 2 | |
| 7 | 140249 | BEARING – CUP | 2 | |
| 8 | 30702 | BEARING – CONE | 2 | |
| 9 | 18608 | PIN – COTTER 3/16 DIA X 1.5 ZP | 2 | |
| 10 | 140250 | CAP – DUST | 2 | |
| 11 | 30889 | TIRE – TUBELESS 31 X 13.5-15 NHS 8 PLY CODE I1 | 2 | |
| 12 | 247264 | WHEEL – SILVER, C/W DECALS | 2 | |
| 13 | 21153 | STEM – TIRE VALVE ASSEMBLY #TR-415 | 2 | |
| | | | | |
| A | 184673 | BOLT – HEX HD M12 X 1.75 X 90-10.9-A3L | | |
| B | 148645 | NUT – HEX FLG STVR LOC M12 X 1.75-10-A3L | | |
| C | 31774 | WASHER – FLAT | | |
| D | 19878 | NUT – HEX SLOTTED 1.00-14 UNF | | |
| E | 18916 | BOLT – 90° WHEEL 9/16 NF X 1.75 OL | | |

108. Includes lube fitting (MD #50174), cup bearing (MD #30701), and bearing cup (MD #140249).

# 26 Carrier to Header Connections

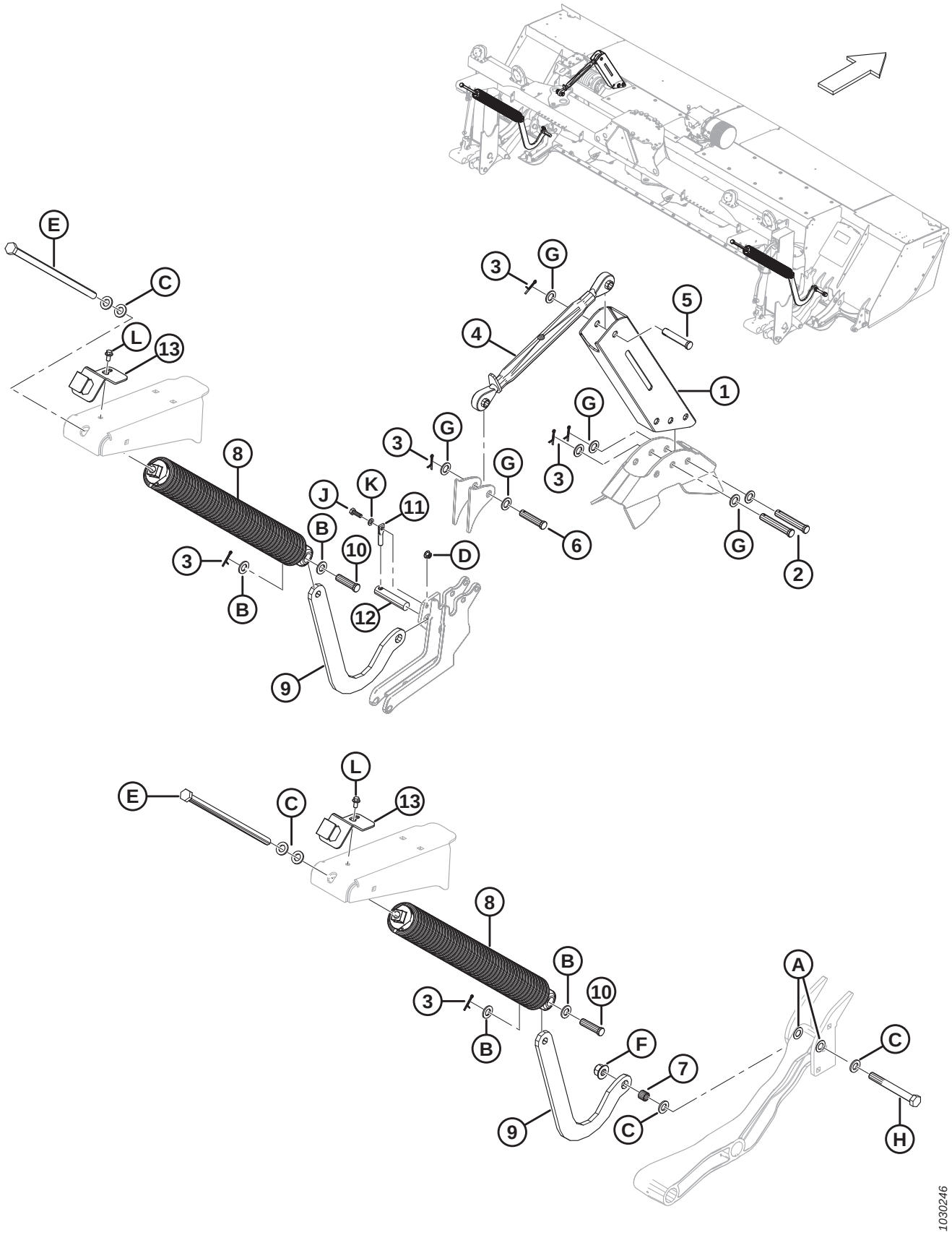

## CARRIER TO HEADER CONNECTIONS

| Ref | Part Number | Description | Qty | Serial Number |
|---|---|---|---|---|
| 1 | 224272 | ANCHOR – TOP | 1 | |
| 2 | 156741 | PIN – CLEVIS | 2 | |
| 3 | 18608 | PIN – COTTER 3/16 DIA X 1.5 ZP | 4 | |
| 4 | 42104 | JOINT ASSY | 1 | |
| | 42431 | JOINT – BALL LH THD | | |
| | 42432 | JOINT – BALL RH THD | | |
| | 42433 | COLLAR – LOCKING | | |
| | 42434 | TUBE – CENTER | | |
| 5 | 20312 | PIN – CLEVIS | 1 | |
| 6 | 30464 | PIN – CLEVIS | 3 | |
| 7 | 222231 | SPACER – ZP | 1 | |
| 8 | 238003 | SPRING ASSEMBLY | 2 | |
| 9 | 221833 | ARM – LINK | 2 | |
| 10 | 30463 | PIN – CLEVIS | 2 | |
| 11 | 112624 | PIN – RETAINER | 1 | |
| 12 | 142376 | PIN – CYLINDER | 1 | |
| 13 | 268350 | PLATE – SPRING LOCKS | 2 | |
| | | | | |
| A | 5113 | WASHER – FLAT | | |
| B | 18601 | WASHER – SAE FLAT 13/16 ID X 1.5 IN OD ZP | | |
| C | 112130 | WASHER – HARDENED | | |
| D | 135799 | NUT – HEX FLG CTR LOC M10 X 1.5-10-A3L | | |
| E | 136088 | BOLT – HEX HD TFL M20 X 2.5 X 450 X SPCL-8.8-A3L | | |
| F | 136122 | NUT – HEX FLG CTR LOC M20 X 2.5-10-A3L | | |
| G | 136477 | WASHER – FLAT REG M20-200HV-A3L | | |
| H | 136650 | BOLT – HEX HD M20 X 2.5 X 170-8.8-A3L | | |
| J | 184661 | BOLT – HEX HD M10 X 1.5 X 30-8.8-A3L | | |
| K | 184711 | WASHER – FLAT REG M10-200HV-A3L | | |
| L | 152655 | BOLT – HEX FLG HD M10 X 1.5 X 20-8.8-AA1J | | |

# 27 Hitch

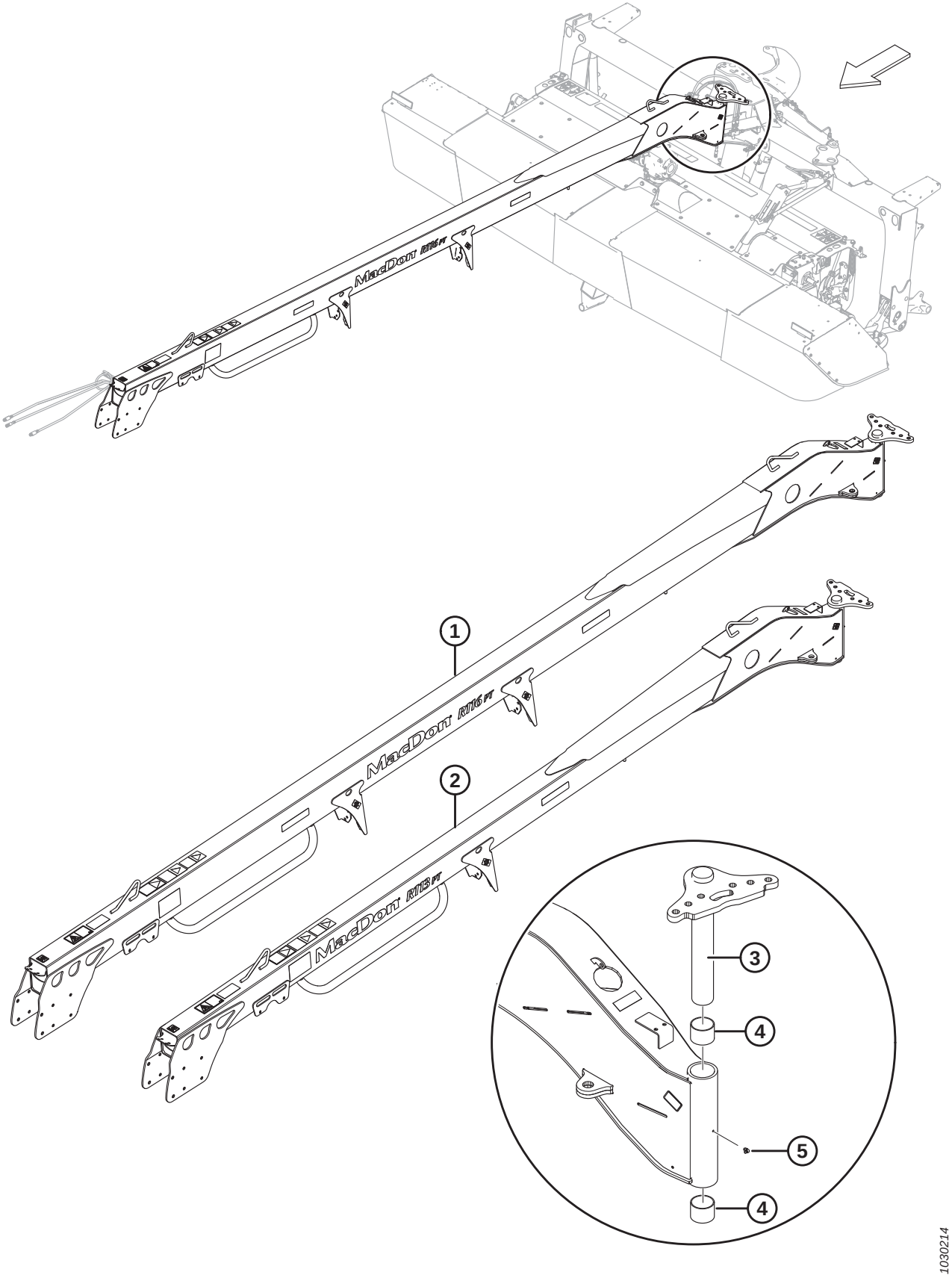

## HITCH

| Ref | Part Number | Description | Qty | Serial Number |
|---|---|---|---|---|
| 1 | 259227 | HITCH – 16 FT PT [109] | 1 | |
| 2 | 259226 | HITCH – 13 FT PT [110] | 1 | |
| 3 | 222786 | HITCH PIN WELDMENT | 1 | |
| 4 | 246574 | BUSHING – SLEEVE, POLY | 2 | |
| 5 | 21010 | FITTING – LUBE 90° 1/4-28 TAPER THD | 1 | |

109. Includes bushings (MD #246574), lube fitting (MD #21010), and decals (MD #194468, 259058, 23165, 194464, 113482, 174436, 246927, 281529, 247182, 23164, 302204). For specific decals, refer to Section *32 Decals and Reflectors, page 95* or Section *33 Decals – Product Identification, page 99*.
110. Includes bushings (MD #246574), lube fitting (MD #21010), and decals (MD #194468, 259058, 23165, 194464, 113482, 174436, 246926, 281529, 247182, 23164, 302204). For specific decals, refer to Section *32 Decals and Reflectors, page 95* or Section *33 Decals – Product Identification, page 99*.

# 28 Hitch – Hydraulic/Electrical

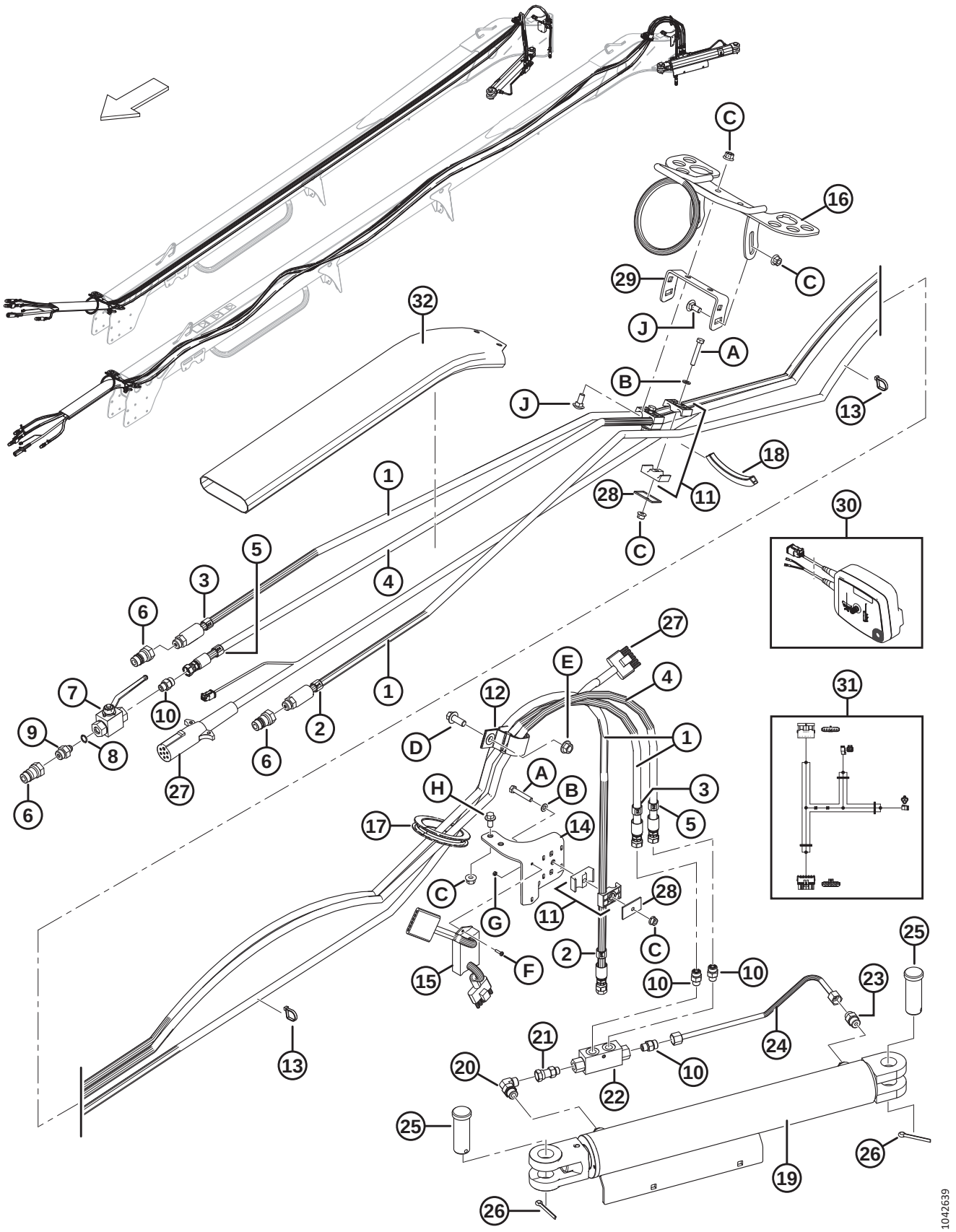

**NOTE:**

For specific electrical harness parts, refer to Electrical Connector Parts Catalog (MD #169641).

| Ref | Part Number | Description | Qty | Serial Number |
|---|---|---|---|---|
| 1 | 224162 | HOSE – HYDRAULIC, 9335 MM (16 FT) [111] | 2 | |
| | 224160 | HOSE – HYDRAULIC, 7872 MM (13 FT) [112] | 2 | |
| 2 | 136381 | COLLAR – HOSE IDENTIFICATION, RED 1 | 2 | |
| 3 | 136384 | COLLAR – HOSE IDENTIFICATION, BLUE 2 | 2 | |
| 4 | 224163 | HOSE – HYDRAULIC, 9335 MM (16 FT) [111] | 1 | |
| | 224161 | HOSE – HYDRAULIC, 7725 MM (13 FT) [112] | 1 | |
| 5 | 136382 | COLLAR – HOSE IDENTIFICATION, RED 2 | 2 | |
| 6 | 135563 | FITTING – COUPLING HYDRAULIC | 3 | |
| 7 | **238222** | **VALVE – BALL** | **1** | |
| 8 | 50219 | O-RING – SAE #6 | 1 | |
| 9 | 21804 | FITTING – CONNECTOR HYDRAULIC | 1 | |
| 10 | 135778 | FITTING – ADAPTER, C/W O-RING | 4 | |
| | 50219 | O-RING – SAE #6 | | |
| | 135865 | O-RING – #6 ORFS | | |
| 11 | 247750 | CLAMP – ASSY | 3 | |
| 12 | 163598 | STRAP – VELCRO, HANGING | 1 | |
| 13 | 21763 | FASTENER – CABLE TIE (BLACK) | 5 | |
| 14 | 224131 | SUPPORT – HOSES, HARNESS | 1 | |
| 15 | 171068 | RELAY – TRANSPORT LIGHTING MODULE [113] | 1 | –321189 |
| 16 | 247822 | SUPPORT – WELDMENT | 1 | |
| 17 | 281400 | SEAL – EDGE TRIM | 1 | |
| 18 | 136162 | SEAL – EDGE TRIM, ±5 140 MM LG | 1 | |
| 19 | 247899 | CYLINDER – HITCH SWING | 1 | |
| | 247180 | SEAL KIT – SWING CYLINDER | | |
| 20 | 136149 | FITTING – ELBOW 90° HYD, C/W O-RING | 1 | |
| | 44209 | O-RING – SAE #8 | | |
| | 135865 | O-RING – #6 ORFS | | |
| 21 | 136147 | FITTING – CONNECTOR HYD, C/W O-RING | 1 | |
| | 50219 | O-RING – SAE #6 | | |
| 22 | 148851 | VALVE – PRESSURE BALANCE | 1 | |
| 23 | 191705 | FITTING – ADAPTER 6 MORFS X 8 MORB, C/W O-RING | 1 | |
| | 44209 | O-RING – SAE #8 | | |
| | 135865 | O-RING – #6 ORFS | | |
| 24 | 223981 | LINE – HYDRAULIC | 1 | |
| 25 | 281101 | PIN – CLEVIS | 2 | |
| 26 | 18609 | PIN – COTTER 1/4 DIA X 2 ZP | 2 | |

111. For R116 pull-types.
112. For R113 pull-types.
113. Transport lighting module relay (MD #171068) is installed on model year 2017 and prior units only. For model year 2018 and later units, transport lighting module (MD #281700) is installed on the carrier frame. Refer to Section *24 Carrier Frame Components, page 73*.

## HITCH – HYDRAULIC/ELECTRICAL

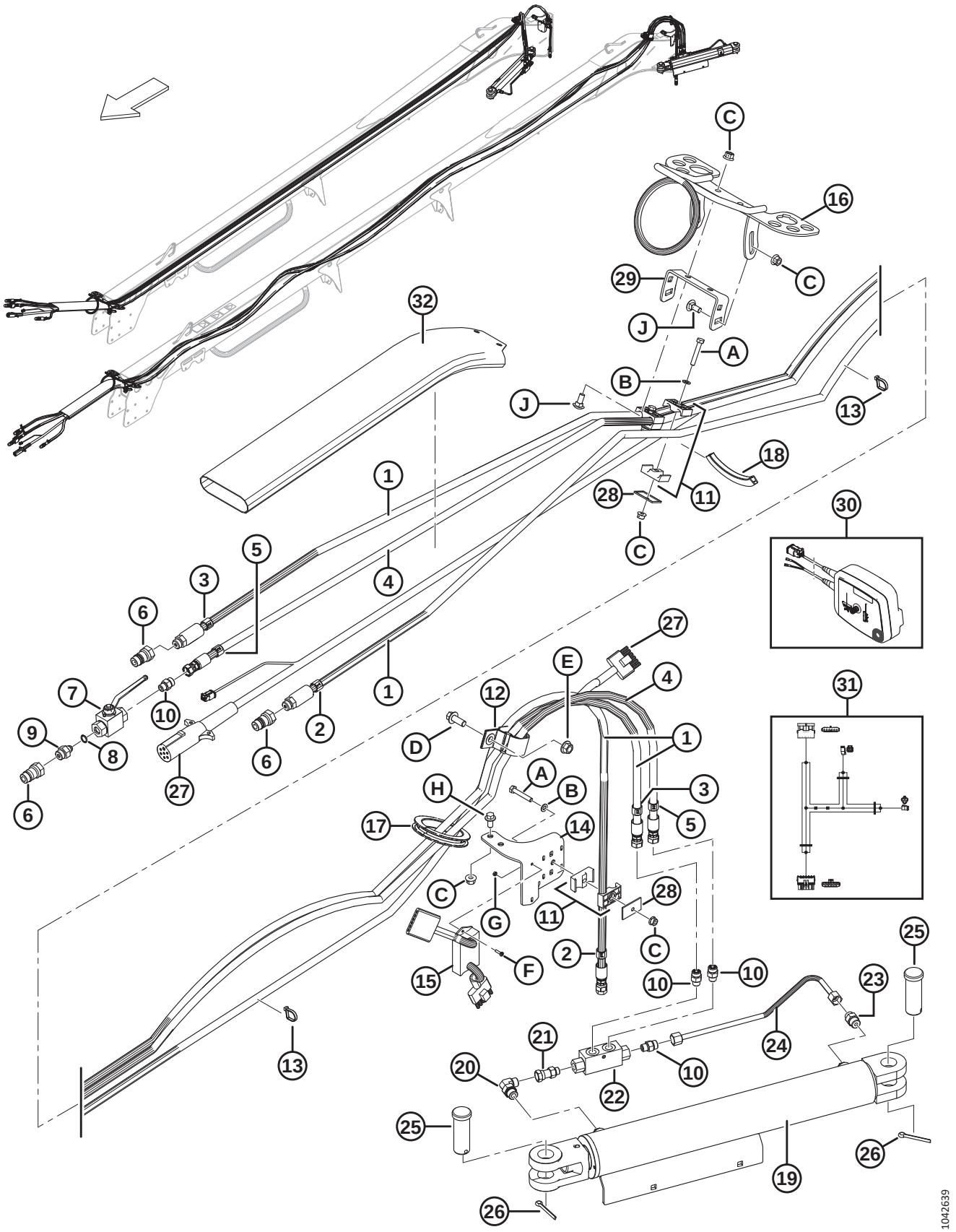

| Ref | Part Number | Description | Qty | Serial Number |
|---|---|---|---|---|
| 27 | 281612 | HARNESS – WIRING, TRAILER, 16 FT | 1 | 321190– |
| | 246559 | HARNESS – WIRING, TRAILER, 16 FT [114] | 1 | –321189 |
| | 281611 | HARNESS – WIRING, TRAILER, 13 FT | 1 | 321190– |
| | 246950 | HARNESS – WIRING, TRAILER (13 FT) [115] | 1 | –321189 |
| | 30710 | TERMINAL – 7 POLE PLUG PER SAE J560 | | |
| | 134029 | CONNECTOR – PLUG, DEUTSCH, SOLENOID | | |
| 28 | 184303 | CLAMP – COVER PLATE | 3 | |
| 29 | 247823 | BRACKET – SUPPORT FOR HOSE | 1 | |
| 30 | B5949 | KIT – TRANSPORT SWITCH, MD [116] | A/R | |
| | 246558 | SWITCH – SWITCH BOX [117] | | |
| | 281615 | HARNESS – 3 PIN AUXILIARY CONNECTOR | 1 | |
| 31 | 247884 | HARNESS – TRANSPORT LIGHTS, REVERSE [118] | A/R | |
| 32 | 238184 | SLEEVE – HOSE | 1 | |
| | | | | |
| A | 252270 | BOLT – HEX HD TFL M8 X 1.25 X 50-8.8-BO | | |
| B | 184708 | WASHER – FLAT M8-200HV-A2L | | |
| C | 135337 | NUT – HEX FLG CTR LOC M8 X 1.25-8-A2L | | |
| D | 148798 | BOLT – HEX FLG HD M12 X 1.75 X 30-10.9-A3L | | |
| E | 148645 | NUT – HEX FLG STVR LOC M12 X 1.75-10-A3L | | |
| F | 136313 | SCREW – PAN HD ISO 7045 M4 X 0.7 X 16-4.8-A2L | | |
| G | 30855 | NUT – HEX M4 X 0.7-8-A2L | | |
| H | 152655 | BOLT – HEX FLG HD M10 X 1.5 X 20-8.8-A3L | | |
| J | 135785 | BOLT – RHSN M10 X 1.5 X 25-8.8-A3L | | |

114. Service part only for units made prior to 2018. For units made in 2018 and later, order MD #281612.
115. Service part only for units made prior to 2018. For units made in 2018 and later, order MD #281611.
116. Includes switch box (MD #281615), harness (MD #281094), decal (MD #281188), and instructions. Kits are available through Whole Goods only.
117. Decal (MD #281188) not included with switch box. For decal, refer to Section *32 Decals and Reflectors, page 95*. Switch box uses 10 Amp fuse.
118. Harness plugged in between hitch harness and carrier harness such that it switches logic of lights so that the carrier harness doesn't have to be moved.

# 29 Hitch – Mechanical Drive

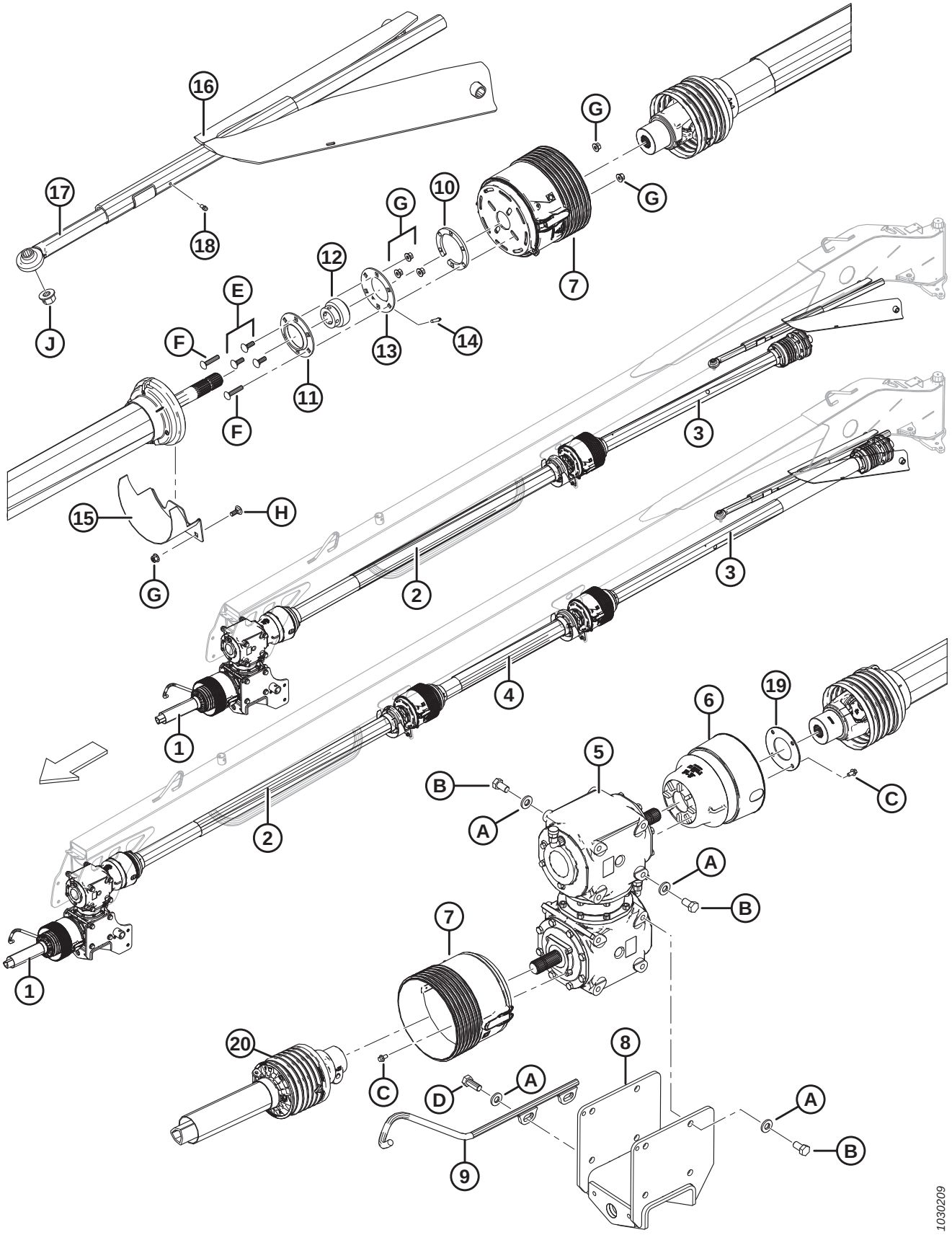

| Ref | Part Number | Description | 13/16 FT. Qty | Serial Number |
|---|---|---|---|---|
| 1 | 247813 | DRIVELINE – PRIMARY IMPLEMENT [119] | 1/1 | |
| 2 | 281532 | DRIVELINE – FRONT [119] | 1/1 | |
| 3 | 239007 | DRIVELINE – CLUTCH [119] | 1/1 | |
| 4 | 246166 | DRIVELINE – MIDDLE (16 FT ONLY) [119] | 0/1 | |
| 5 | 146784 | DRIVE – GEARBOX, SWIVEL [120] | 1/1 | |
| 6 | 224601 | SHIELD – COUNTER CONE | 1/1 | |
| 7 | 246420 | SHIELD – CONE | 2/3 | |
| 8 | 259461 | GEARBOX SUPPORT – WELDMENT | 1/1 | 371190– |
| | 259232 | GEARBOX SUPPORT – WELDMENT [121] | 1/1 | –371189 |
| 9 | 281110 | HOLDER – WELDMENT | 1/1 | |
| 10 | 246207 | PLATE | 1/2 | |
| 11 | 135773 | FLANGE – TYPE 3 72 MM 6 BOLT | 1/2 | |
| 12 | 21936 | BEARING – BALL SPH OD C/W LC (1 3/8 IN. BORE) | 1/2 | |
| 13 | 135774 | FLANGE – 6 BOLT C/W GREASE FITTING | 1/2 | |
| 14 | 30934 | FITTING – LUBRICATION 1/4-28 TAPER THD | 1/2 | |
| 15 | 224523 | SHIELD – WELD'T | 1/2 | |
| 16 | 281380 | WELDMENT – STEERING | 1/1 | |
| 17 | 224373 | ROD – PT STEERING | 1/1 | |
| 18 | 7782 | FITTING – LUBRICATION 1/4-28 TAPER THD | 1/1 | |
| 19 | 247831 | PLATE – CLAMP | 1/1 | |
| 20 | 247814 | KIT – SHIELD 1.75 20T DL (PTO AND IMPLEMENT) | 1/1 | |
| | 247815 | KIT – SHIELD 1.375 21T DL (PTO AND IMPLEMENT) | 1/1 | |
| | | | | |
| A | 120901 | WASHER – FLAT HARDENED 5/8 IN. NOMINAL (L9) | | |
| B | 136143 | BOLT – HEX HD TFL M16 X 2 X 30-10.9-A3L | | |
| C | 136485 | BOLT – HEX FLG HD TFL M8 X 1.25 X 16-8.8-A3L | | |
| D | 111528 | BOLT – HEX HD TFL M16 X 2 X 40-8.8-A3L | | |
| E | 184662 | BOLT – RHSN TFL M10 X 1.5 X 30-8.8-A3L | | |
| F | 252919 | BOLT – RHSN TFL M10 X 1.5 X 50-8.8-AA1J | | |
| G | 135799 | NUT – HEX FLG CTR LOC M10 X 1.5-10-A3L | | |
| H | 135785 | BOLT – RHSN M10 X 1.5 X 25-8.8-A3L | | |
| J | 136440 | NUT – HEX FLG CTR LOC M16 X 2-10-A3L | | |

119. For service parts, refer to Section *30 Hitch Driveline – Service Parts, page 89*.
120. For service parts, refer to Section *12 Drive and Swivel Gearbox – Service Parts, page 35*.
121. Use MD #259232 to service units made in model year 2019 and prior until stock is depleted, then use MD #259461.

# 30 Hitch Driveline – Service Parts

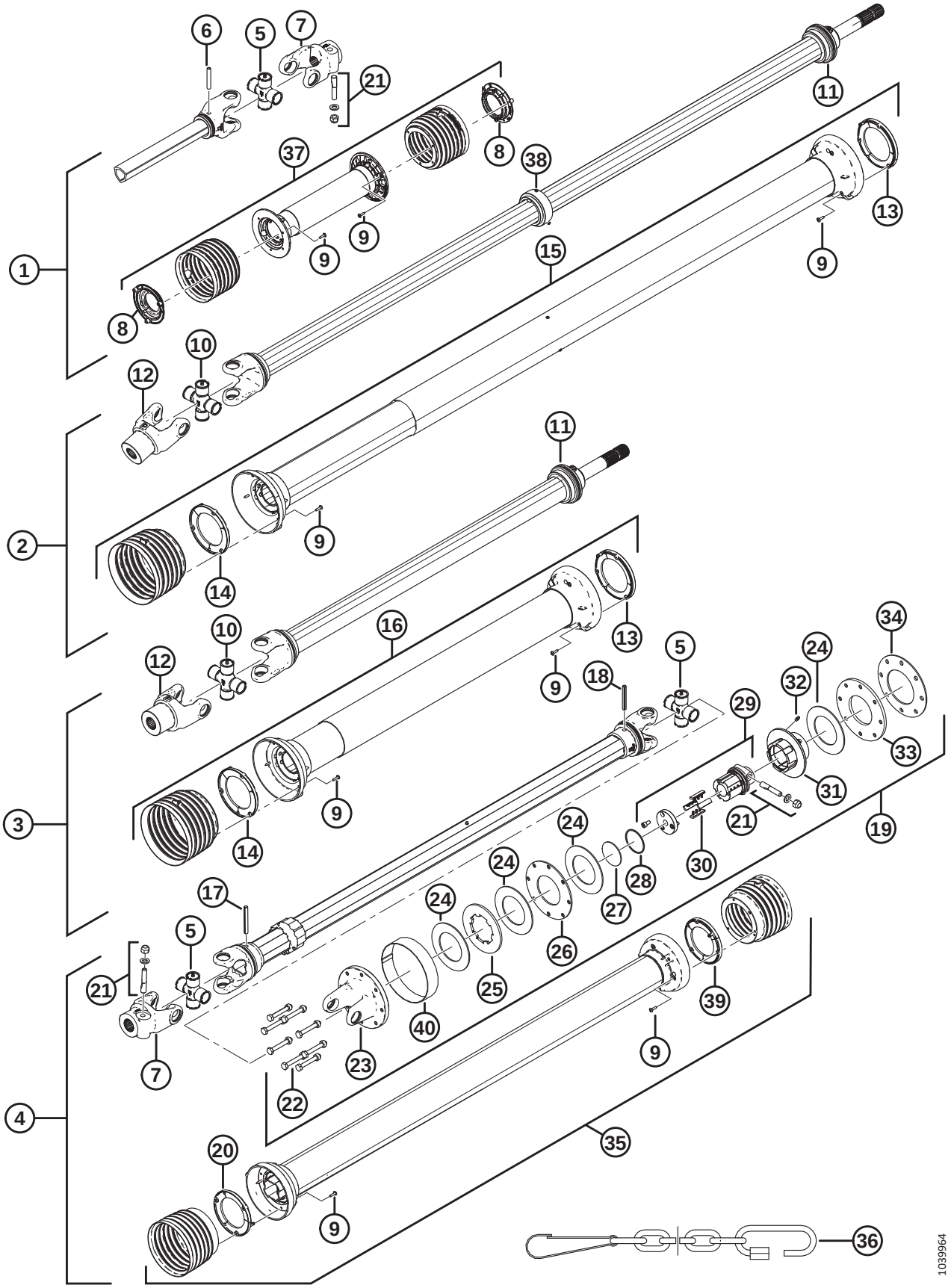

## HITCH DRIVELINE – SERVICE PARTS

| Ref | Part Number | Description | Qty | Serial Number |
|---|---|---|---|---|
| | | **PRIMARY DRIVELINE** | | |
| 1 | 247813 | DRIVELINE – IMPLEMENT | 1 | |
| 5 | 247123 | CROSS KIT | 1 | |
| 6 | 247126 | ROLL PIN (10 X 65) | 1 | |
| 7 | 247124 | YOKE | 1 | |
| 8 | 247129 | SHIELD SUPPORT (INNER) | 1 | |
| 9 | 247128 | SCREW | 3 | |
| 21 | 247133 | TAPER PIN (2 SETS) | 1 | |
| 36 | 111242 | SHIELD CHAIN | 1 | |
| 37 | 247814 | KIT – SHIELD 1.75 20T DL (PTO AND IMPLEMENT) | 1 | |
| | 247815 | KIT – SHIELD 1.375 21T DL (PTO AND IMPLEMENT) | 1 | |
| | | **FRONT DRIVELINE** | | |
| 2 | 281532 | DRIVELINE – FRONT | 1 | |
| 9 | 247128 | SCREW | 6 | |
| 10 | 247155 | CROSS KIT | 1 | |
| 11 | 247156 | SUPPORT PLATE | 1 | |
| 12 | 247157 | YOKE | 1 | |
| 13 | 247158 | SHIELD SUPPORT (OUTER) | 1 | |
| 14 | 247159 | SHIELD SUPPORT (INNER) | 1 | |
| 15 | 281508 | SHIELD KIT | 1 | |
| 36 | 111242 | SHIELD CHAIN | 1 | |
| 38 | 281715 | STABILIZER | 1 | |
| | | **MIDDLE DRIVELINE** | | |
| 3 | 246166 | DRIVELINE – MIDDLE, 16 FT ONLY | 1 | |
| 9 | 247128 | SCREW | 6 | |
| 10 | 247155 | CROSS KIT | 1 | |
| 11 | 247156 | SUPPORT PLATE | 1 | |
| 12 | 247157 | YOKE | 1 | |
| 13 | 247158 | SHIELD SUPPORT (OUTER) | 1 | |
| 14 | 247159 | SHIELD SUPPORT (INNER) | 1 | |
| 16 | 247160 | SHIELD KIT | 1 | |
| 36 | 111242 | SHIELD CHAIN | 1 | |
| | | **REAR DRIVELINE WITH CLUTCH** | | |
| 4 | 239007 | DRIVELINE – CLUTCH | 1 | |
| 5 | 247123 | CROSS KIT | 2 | |
| 7 | 247124 | YOKE | 1 | |
| 9 | 247128 | SCREW | 6 | |
| 17 | 247136 | ROLL PIN (10 X 85) | 1 | |
| 18 | 256663 | ROLL PIN (10 X 75) | 1 | |
| 19 | 239009 | CLUTCH ASSEMBLY | 1 | |
| 20 | 247138 | SHIELD SUPPORT (OUTER) | 1 | |
| 21 | 247133 | TAPER PIN (2 SETS) | 1 | |
| 22 | 247143 | M10 BOLT / NUT (PKG 8 BOLT AND NUT) [122] | 1 | |

122. Contains eight bolts and nuts.

## HITCH DRIVELINE – SERVICE PARTS

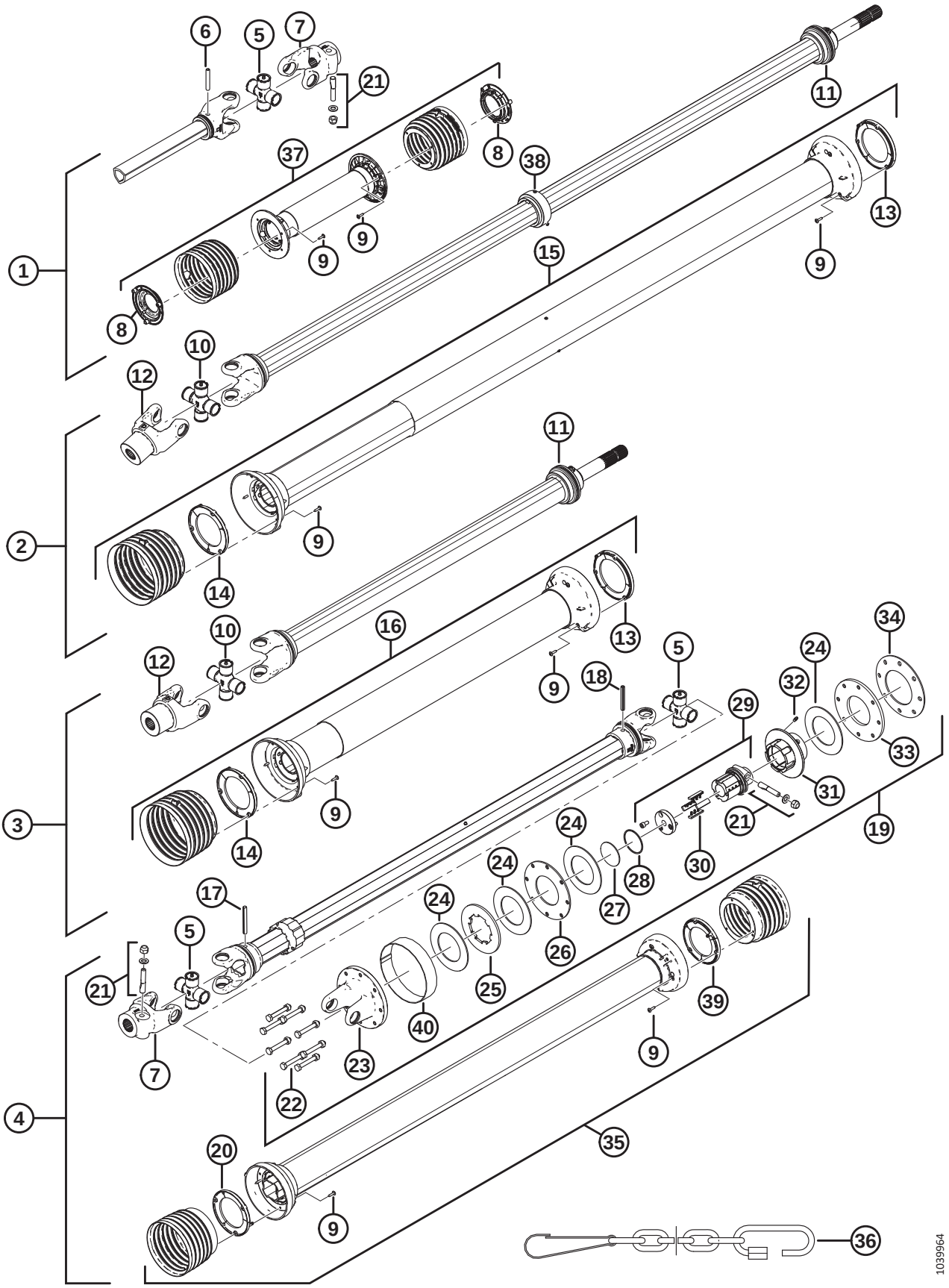

| Ref | Part Number | Description | Qty | Serial Number |
|---|---|---|---|---|
| 23 | 247144 | YOKE FLANGE | 1 | |
| 24 | 224446 | FRICTION DISC **(PKG OF 4)** [123] | 1 | |
| 25 | 247145 | DRIVE PLATE | 1 | |
| 26 | 247146 | INNER PLATE | 1 | |
| 27 | 247147 | DOMED PLUG | 1 | |
| 28 | 247148 | EXTERNAL CIRCLIP | 1 | |
| 29 | 247149 | HUB | 1 | |
| 30 | 247150 | RATCHET C/W SPRINGS | 1 | |
| 31 | 247151 | FLANGED HOUSING | 1 | |
| 32 | 247152 | GREASE FITTING | 1 | |
| 33 | 247153 | PLATE | 1 | |
| 34 | 247154 | BELLEVILLE SPRING [124] | 1 | |
| | 242381 | BELLEVILLE SPRING [125] | 1 | |
| 35 | 246920 | SHIELD KIT | 1 | |
| 36 | 111242 | SHIELD CHAIN | 1 | |
| 39 | 247139 | SHIELD SUPPORT (INNER) | 1 | |
| 40 | NSS | SHIELD – CLUTCH [126] | 1 | |

123. Includes four friction discs per package.
124. Used for superseded clutch driveline (MD #224400).
125. Used for clutch driveline (MD #239007), or for rear drivelines that have been serviced with clutch assembly (MD #239009).
126. Not sold separately. Clutch shield is used for rear drivelines that have been serviced with clutch assembly (MD #239009).

# 31 Front Half Drivelines

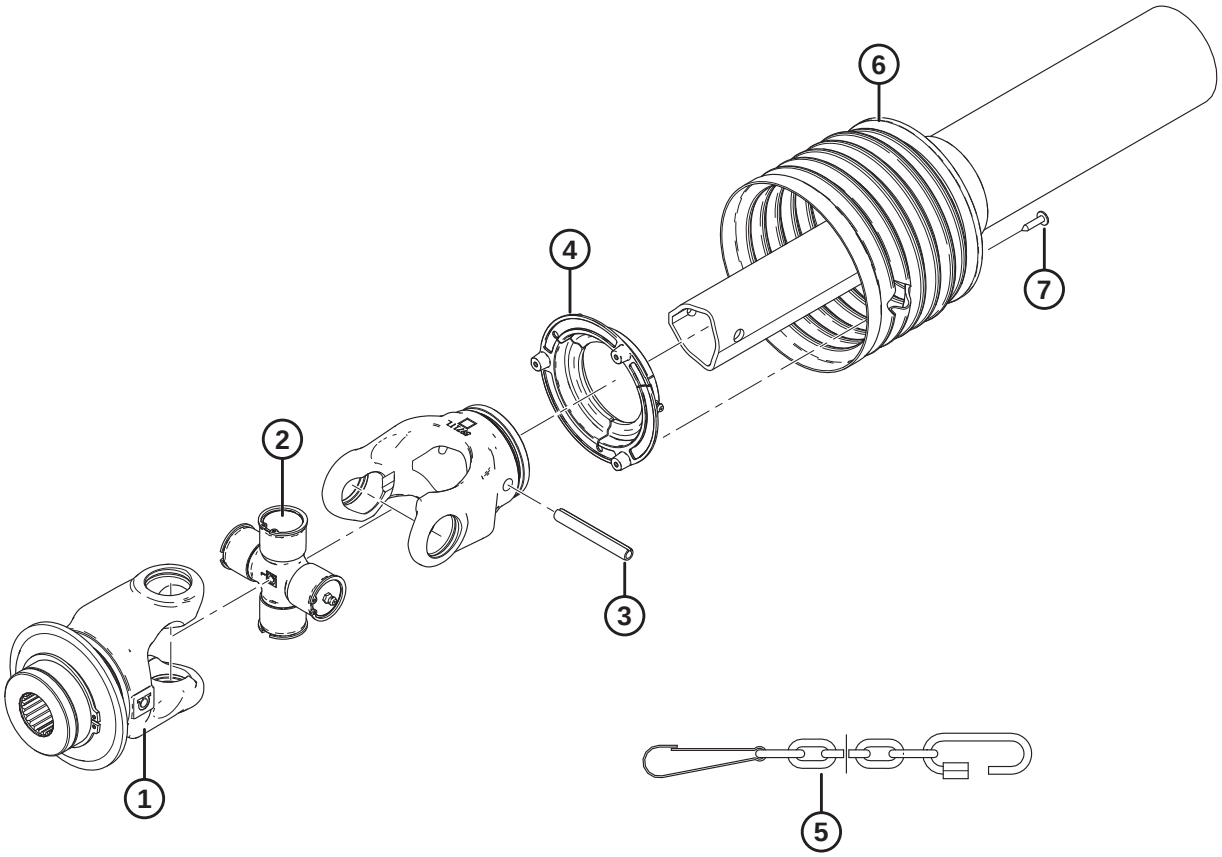


1010698

**NOTE:**

This section lists service parts for standard front-half drivelines. For driveline extension kits, refer to Sections *41 (Option) Driveline Extension Kit (2017 and Prior), page 119* and *42 (Option) Driveline Extension Kit (2018 and Later), page 121*. For additional information, refer to Service Bulletin SB 1708.

| Ref | Part Number | Description | Qty | Serial Number |
|---|---|---|---|---|
| | 247811 | DRIVELINE – 1.375 IN 21 T FRONT HALF | | |
| 1 | 247162 | YOKE | 1 | |
| 2 | 247123 | CROSS KIT | 1 | |
| 3 | 247126 | PIN – ROLL | 1 | |
| 4 | 247127 | SUPPORT – SHIELD (OUTER) | 1 | |
| 5 | 111242 | SHIELD – CHAIN | 1 | |
| 6 | 247815 | KIT – SHIELD (PTO AND IMPLEMENT) | 1 | |
| 7 | 247128 | SCREW | 3 | |
| | | | | |
| | 247812 | DRIVELINE – 1.75 IN 20 T FRONT HALF | | |
| 1 | 247161 | YOKE | 1 | |
| 2 | 247123 | CROSS KIT | 1 | |
| 3 | 247126 | PIN – ROLL | 1 | |
| 4 | 247127 | SUPPORT – SHIELD (OUTER) | 1 | |
| 5 | 111242 | SHIELD – CHAIN | 1 | |
| 6 | 247814 | KIT – SHIELD (PTO AND IMPLEMENT) | 1 | |
| 7 | 247128 | SCREW | 3 | |

# 32 Decals and Reflectors

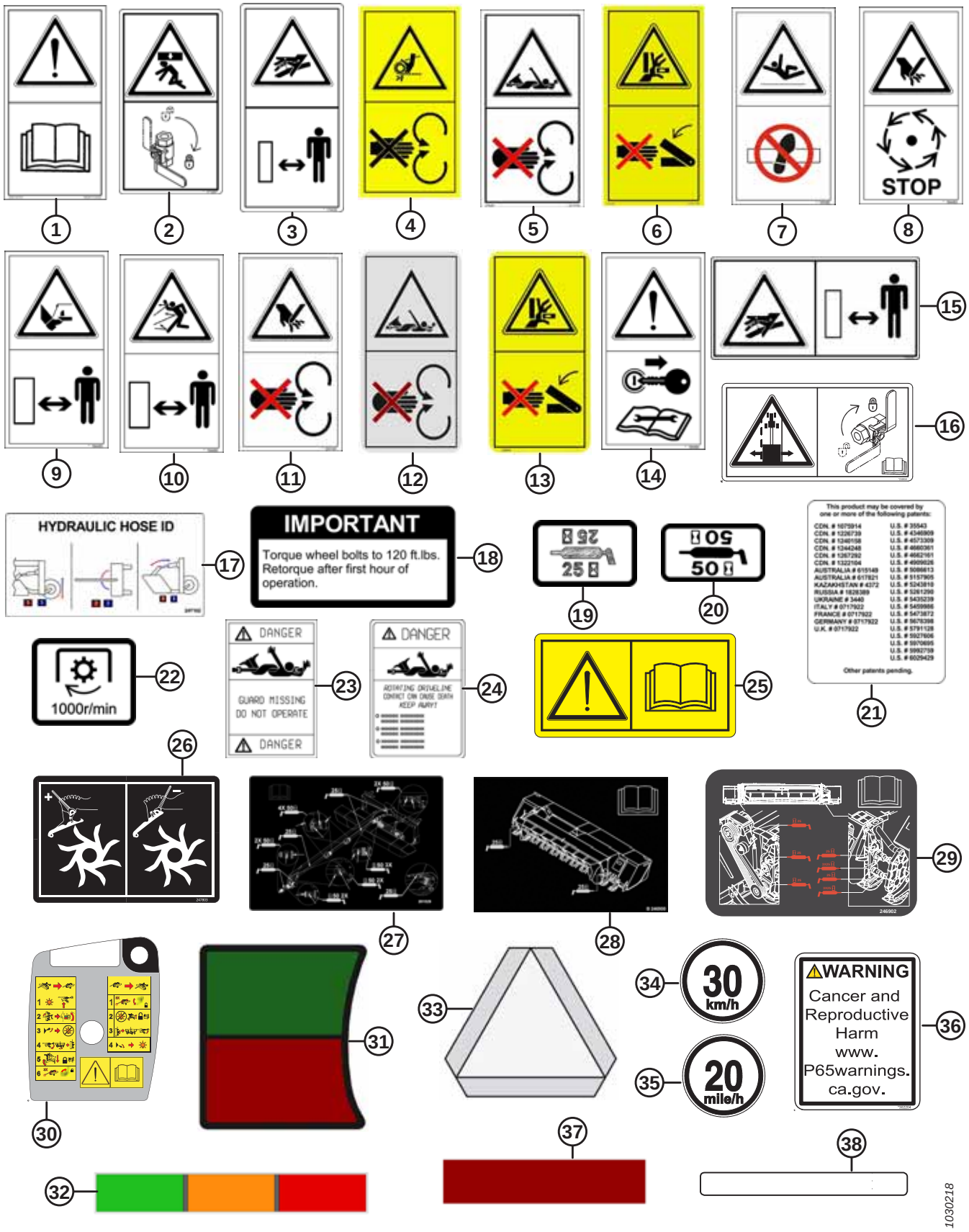

## DECALS AND REFLECTORS

| Ref | Part Number | Description | Qty | Serial Number |
|---|---|---|---|---|
| 1 | 113482 | DECAL – GENERAL HAZARD | | |
| 2 | 171287 | DECAL – INSTALL LOCK, 2 PANEL | | |
| 3 | 174436 | DECAL – HIGH PRESSURE FLUID | | |
| 4 | 184371 | DECAL – CHAIN ENTANGLEMENT | | |
| 5 | 184385 | DECAL – KEEP SHIELDS IN PLACE | | |
| 6 | 184386 | DECAL – PINCH POINT | | |
| 7 | 190546 | DECAL – SLIPPERY SURFACE, 2 PANEL | | |
| 8 | 194463 | DECAL – STOP DRIVE, 2 PANEL | | |
| 9 | 194465 | DECAL – STAND CLEAR BLADES, 2 PANEL | | |
| 10 | 194466 | DECAL – STAND CLEAR THROWN OBJECTS, 2 PANEL | | |
| 11 | 247167 | DECAL – STOP DRIVE | | |
| 12 | 246956 | DECAL – KEEP SHIELDS IN PLACE (PT ROLL CONDITIONER) [127] | | |
| 13 | 246959 | DECAL – PINCH POINT (PT ROLL CONDITIONER) [127] | | |
| 14 | 194464 | DECAL – SHUT DOWN FOR SERVICE, 2 PANEL | | |
| 15 | 166466 | DECAL – HIGH PRESSURE FLUID | | |
| 16 | 259058 | DECAL – OFF-CENTER TRACKING HAZARD | | |
| 17 | 247182 | DECAL – HYDRAULIC HOSE | | |
| 18 | 101375 | DECAL – WHEEL BOLTS | | |
| 19 | 23164 | DECAL – 25 HR LUBE | | |
| 20 | 23165 | DECAL – 50 HR LUBE | | |
| 21 | 32070 | DECAL – PATENT NUMBER | | |
| 22 | 194468 | DECAL – 1000 RPM | | |
| 23 | 247130 | DECAL – DANGER (OUTER DRIVE TUBE) [128] | | |
| 24 | 247131 | DECAL – DANGER (OUTER SHIELD TUBE) [129] | | |
| 25 | 184372 | DECAL – READ MANUAL | | |
| 26 | 247803 | DECAL – BAFFLE ADJUSTMENT | | |
| 27 | 281529 | DECAL – GREASE, PT DRIVES | | |
| 28 | 246900 | DECAL – GREASE, FINGER CONDITIONER | | |
| 29 | 246902 | DECAL – GREASE, PT ROLLER CONDITIONER | | |
| 30 | 259056 | DECAL – TRANSPORT SWITCH, MD | | |
| 31 | 246586 | DECAL – GAUGE (TRANSPORT ALIGNMENT) | | |
| 32 | 150651 | DECAL – GAUGE (HYDRAULIC TILT) | | |
| 33 | 115148 | DECAL – SMV REFLECTOR [130] | | 346190– |
| | 135378 | REFLECTOR – SMV [131] | | –346189 |
| 34 | 193241 | DECAL – SIS, 30 KM/H | | |
| 35 | 193242 | DECAL – SIS, 20 MILE/H | | |
| 36 | 302204 | DECAL – CA PROPOSITION 65 | | |

127. Used on roll conditioners.
128. Used on outer drive tube.
129. Used on outer shield tube.
130. For model year 2019 and later.
131. For model year 2018 and prior.

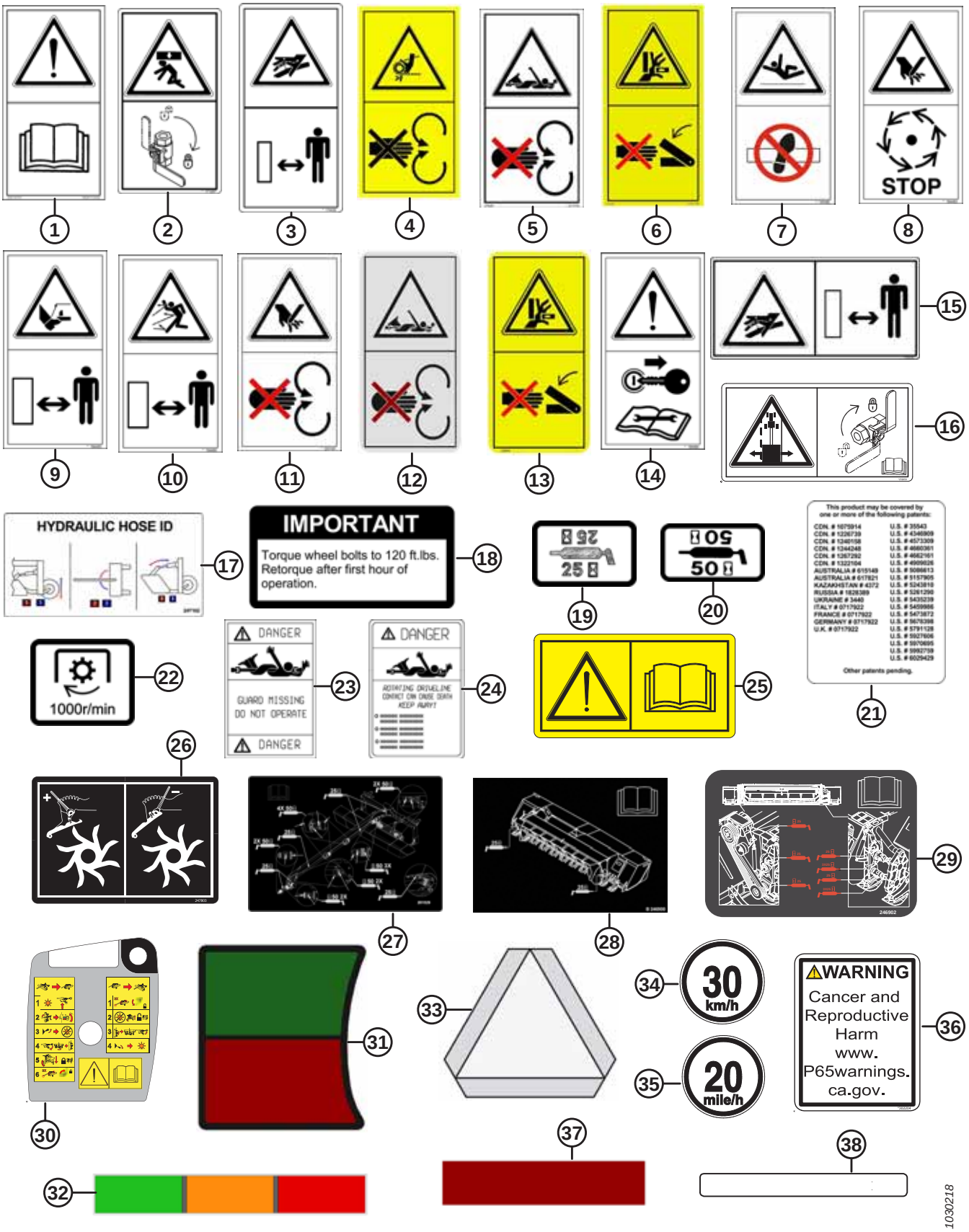
STOP
HYDRAULIC HOSE ID
IMPORTANT
Torque wheel bolts to 120 ft.lbs.
Retorque after first hour of operation.
25 B
50 B
This product may be covered by one or more of the following patents:
Other patents pending.
1000r/min
DANGER
GUARD MISSING
DO NOT OPERATE
DANGER
DANGER
ROTATING DRIVELINE
CONTACT CAN CAUSE DEATH
KEEP AWAY!
30 km/h
20 mile/h
WARNING
Cancer and Reproductive Harm
www.P65warnings.ca.gov.
1030218

| Ref | Part Number | Description | Qty | Serial Number |
|---|---|---|---|---|
| 37 | 115145 | REFLECTOR – FLUORESCENT RED-ORANGE | | |
| | 115146 | REFLECTOR – AMBER | | |
| | 115147 | REFLECTOR – RED | | |
| 38 | 132117 | STRIP – ANTI-SLIP (HEADER) [132] | | |
| | 132898 | STRIP – ANTI-SLIP (ROLL CONDITIONER) [133] | | |

132. 450 mm x 50 mm; used on the header.
133. 450 mm x 80 mm; used on the roll conditioner.

# 33 Decals – Product Identification

## DECALS – PRODUCT IDENTIFICATION

| Ref | Part Number | Description | Qty | Serial Number |
|---|---|---|---|---|
| 1 | 246896 | DECAL – LH, END PANEL | | |
| | 246897 | DECAL – RH, END PANEL | | |
| 2 | 247004 | DECAL – TOP, R116 PT (WHITE, 475 MM LG) | | |
| | 246911 | DECAL – END PANEL, R116 PT (WHITE, 225 MM LG) | | |
| 3 | 246998 | DECAL – TOP, R113 PT (WHITE, 468 MM LG) | | |
| | 246910 | DECAL – END PANEL, R113 PT (WHITE, 224 MM LG) | | |
| 4 | 246997 | DECAL – TOP, MACDON (WHITE, 1140 MM LG) | | |
| 5 | 246927 | DECAL – HITCH, R116 PT (WHITE, 1078 MM LG) | | |
| 6 | 246926 | DECAL – HITCH, R113 PT (WHITE, 1073 MM LG) | | |

# 34 Paint

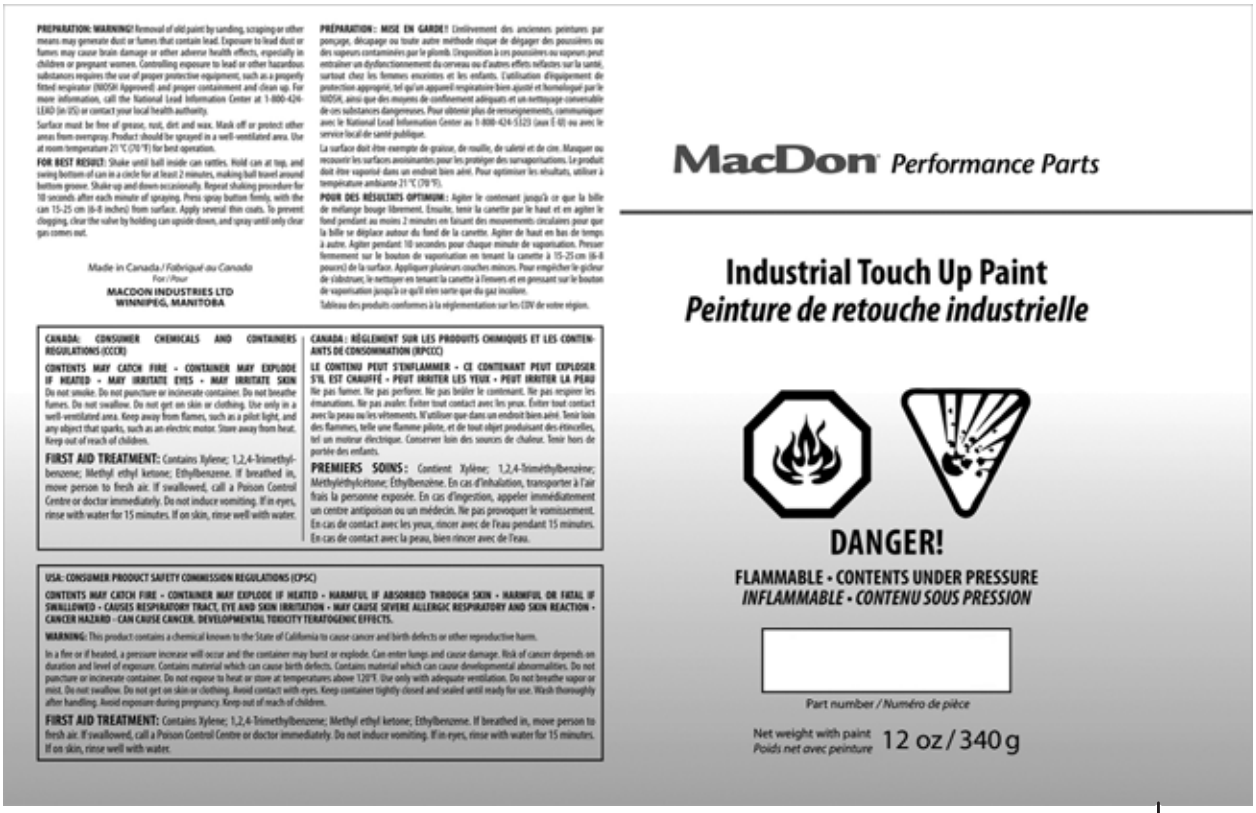

**PREPARATION: WARNING!** Removal of old paint by sanding, scraping or other means may generate dust or fumes that contain lead. Exposure to lead dust or fumes may cause brain damage or other adverse health effects, especially in children or pregnant women. Controlling exposure to lead or other hazardous substances requires the use of proper protective equipment, such as a properly fitted respirator (NIOSH Approved) and proper containment and clean up. For more information, call the National Lead Information Center at 1-800-424-LEAD (in US) or contact your local health authority.

Surface must be free of grease, rust, dirt and wax. Mask off or protect other areas from overspray. Product should be sprayed in a well-ventilated area. Use at room temperature 21°C (70°F) for best operation.

**FOR BEST RESULT:** Shake until ball inside can rattles. Hold can at top, and swing bottom of can in a circle for at least 2 minutes, making ball travel around bottom groove. Shake up and down occasionally. Repeat shaking procedure for 10 seconds after each minute of spraying. Press spray button firmly, with the can 15-25 cm (6-8 inches) from surface. Apply several thin coats. To prevent clogging, clear the valve by holding can upside down, and spray until only clear gas comes out.

*Made in Canada / Fabriqué au Canada*
For / Pour
**MACDON INDUSTRIES LTD**
**WINNIPEG, MANITOBA**

**PRÉPARATION : MISE EN GARDE !** L'enlèvement des anciennes peintures par ponçage, décapage ou toute autre méthode risque de dégager des poussières ou des vapeurs contaminées par le plomb. L'exposition à ces poussières ou vapeurs peut entraîner un dysfonctionnement du cerveau ou d'autres effets néfastes sur la santé, surtout chez les femmes enceintes et les enfants. L'utilisation d'équipement de protection approprié, tel qu'un appareil respiratoire bien ajusté et homologué par le NIOSH, ainsi que des moyens de confinement adéquats et un nettoyage convenable de ces substances dangereuses. Pour obtenir plus de renseignements, communiquer avec le National Lead Information Center au 1-800-424-5323 (aux É-U) ou avec le service local de santé publique.

La surface doit être exempte de graisse, de rouille, de saleté et de cire. Masquer ou recouvrir les surfaces avoisinantes pour les protéger des survaporisations. Le produit doit être vaporisé dans un endroit bien aéré. Pour optimiser les résultats, utiliser à température ambiante 21°C (70°F).

**POUR DES RÉSULTATS OPTIMUM :** Agiter le contenant jusqu'à ce que la bille de mélange bouge librement. Ensuite, tenir la cannette par le haut et en agiter le fond pendant au moins 2 minutes en faisant des mouvements circulaires pour que la bille se déplace autour du fond de la cannette. Agiter de haut en bas de temps à autre. Agiter pendant 10 secondes pour chaque minute de vaporisation. Presser fermement sur le bouton de vaporisation en tenant la cannette à 15-25 cm (6-8 pouces) de la surface. Appliquer plusieurs couches minces. Pour empêcher le gicleur de s'obstruer, le nettoyer en tenant la cannette à l'envers et en pressant sur le bouton de vaporisation jusqu'à ce qu'il n'en sorte que du gaz incolore.

Tableau des produits conformes à la réglementation sur les COV de votre région.

**CANADA: CONSUMER CHEMICALS AND CONTAINERS REGULATIONS (CCCR)**

**CONTENTS MAY CATCH FIRE - CONTAINER MAY EXPLODE IF HEATED - MAY IRRITATE EYES - MAY IRRITATE SKIN**
Do not smoke. Do not puncture or incinerate container. Do not breathe fumes. Do not swallow. Do not get on skin or clothing. Use only in a well-ventilated area. Keep away from flames, such as a pilot light, and any object that sparks, such as an electric motor. Store away from heat. Keep out of reach of children.

**FIRST AID TREATMENT:** Contains Xylene; 1,2,4-Trimethylbenzene; Methyl ethyl ketone; Ethylbenzene. If breathed in, move person to fresh air. If swallowed, call a Poison Control Centre or doctor immediately. Do not induce vomiting. If in eyes, rinse with water for 15 minutes. If on skin, rinse well with water.

**CANADA : RÈGLEMENT SUR LES PRODUITS CHIMIQUES ET LES CONTENANTS DE CONSOMMATION (RPCCC)**

**LE CONTENU PEUT S'ENFLAMMER - CE CONTENANT PEUT EXPLOSER S'IL EST CHAUFFÉ - PEUT IRRITER LES YEUX - PEUT IRRITER LA PEAU**
Ne pas fumer. Ne pas perforer. Ne pas brûler le contenant. Ne pas respirer les émanations. Ne pas avaler. Éviter tout contact avec les yeux. Éviter tout contact avec la peau ou les vêtements. N'utiliser que dans un endroit bien aéré. Tenir loin des flammes, telle une flamme pilote, et de tout objet produisant des étincelles, tel un moteur électrique. Conserver loin des sources de chaleur. Tenir hors de portée des enfants.

**PREMIERS SOINS :** Contient Xylène; 1,2,4-Triméthylbenzène; Méthyléthylcétone; Éthylbenzène. En cas d'inhalation, transporter à l'air frais la personne exposée. En cas d'ingestion, appeler immédiatement un centre antipoison ou un médecin. Ne pas provoquer le vomissement. En cas de contact avec les yeux, rincer avec de l'eau pendant 15 minutes. En cas de contact avec la peau, bien rincer avec de l'eau.

**USA: CONSUMER PRODUCT SAFETY COMMISSION REGULATIONS (CPSC)**

**CONTENTS MAY CATCH FIRE - CONTAINER MAY EXPLODE IF HEATED - HARMFUL IF ABSORBED THROUGH SKIN - HARMFUL OR FATAL IF SWALLOWED - CAUSES RESPIRATORY TRACT, EYE AND SKIN IRRITATION - MAY CAUSE SEVERE ALLERGIC RESPIRATORY AND SKIN REACTION - CANCER HAZARD - CAN CAUSE CANCER. DEVELOPMENTAL TOXICITY TERATOGENIC EFFECTS.**

**WARNING:** This product contains a chemical known to the State of California to cause cancer and birth defects or other reproductive harm.

In a fire or if heated, a pressure increase will occur and the container may burst or explode. Can enter lungs and cause damage. Risk of cancer depends on duration and level of exposure. Contains material which can cause birth defects. Contains material which can cause developmental abnormalities. Do not puncture or incinerate container. Do not expose to heat or store at temperatures above 120°F. Use only with adequate ventilation. Do not breathe vapor or mist. Do not swallow. Do not get on skin or clothing. Avoid contact with eyes. Keep container tightly closed and sealed until ready for use. Wash thoroughly after handling. Avoid exposure during pregnancy. Keep out of reach of children.

**FIRST AID TREATMENT:** Contains Xylene; 1,2,4-Trimethylbenzene; Methyl ethyl ketone; Ethylbenzene. If breathed in, move person to fresh air. If swallowed, call a Poison Control Centre or doctor immediately. Do not induce vomiting. If in eyes, rinse with water for 15 minutes. If on skin, rinse well with water.

**MacDon** *Performance Parts*

**Industrial Touch Up Paint**
***Peinture de retouche industrielle***

**DANGER!**
**FLAMMABLE • CONTENTS UNDER PRESSURE**
***INFLAMMABLE • CONTENU SOUS PRESSION***

Part number / *Numéro de pièce*

Net weight with paint
*Poids net avec peinture* 12 oz / 340 g

1

2

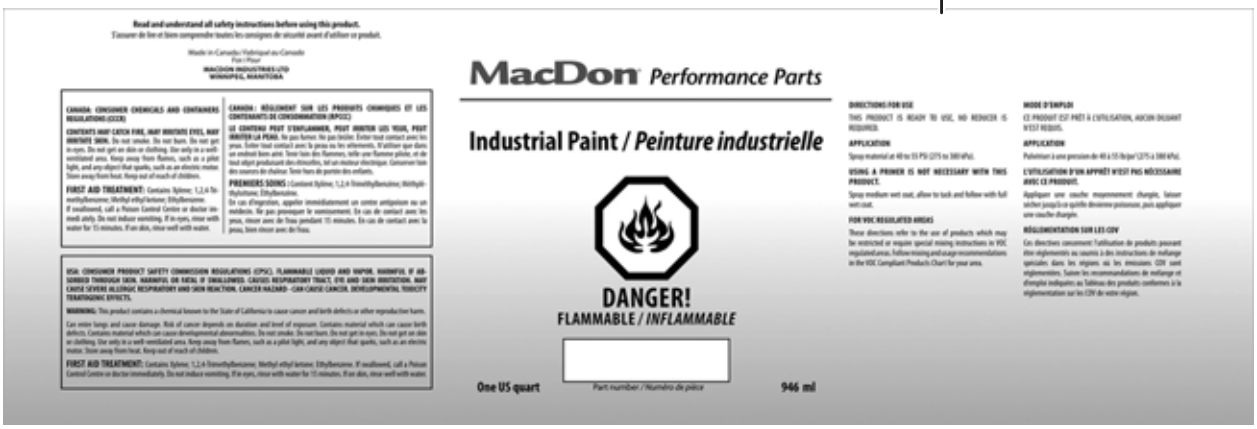

**Read and understand all safety instructions before using this product.**
S'assurer de lire et bien comprendre toutes les consignes de sécurité avant d'utiliser ce produit.

*Made in Canada / Fabriqué au Canada*
For / Pour
**MACDON INDUSTRIES LTD**
**WINNIPEG, MANITOBA**

**CANADA: CONSUMER CHEMICALS AND CONTAINERS REGULATIONS (CCCR)**

**CONTENTS MAY CATCH FIRE, MAY IRRITATE EYES, MAY IRRITATE SKIN.** Do not smoke. Do not burn. Do not get in eyes. Do not get on skin or clothing. Use only in a well-ventilated area. Keep away from flames, such as a pilot light, and any object that sparks, such as an electric motor. Store away from heat. Keep out of reach of children.

**FIRST AID TREATMENT:** Contains Xylene; 1,2,4 Trimethylbenzene; Methyl ethyl ketone; Ethylbenzene. If swallowed, call a Poison Control Centre or doctor immediately. Do not induce vomiting. If in eyes, rinse with water for 15 minutes. If on skin, rinse well with water.

**CANADA : RÈGLEMENT SUR LES PRODUITS CHIMIQUES ET LES CONTENANTS DE CONSOMMATION (RPCCC)**

**LE CONTENU PEUT S'ENFLAMMER, PEUT IRRITER LES YEUX, PEUT IRRITER LA PEAU.** Ne pas fumer. Ne pas brûler. Éviter tout contact avec les yeux. Éviter tout contact avec la peau ou les vêtements. N'utiliser que dans un endroit bien aéré. Tenir loin des flammes, telle une flamme pilote, et de tout objet produisant des étincelles, tel un moteur électrique. Conserver loin des sources de chaleur. Tenir hors de portée des enfants.

**PREMIERS SOINS :** Contient Xylène; 1,2,4 Triméthylbenzène; Méthyléthylcétone; Éthylbenzène.
En cas d'ingestion, appeler immédiatement un centre antipoison ou un médecin. Ne pas provoquer le vomissement. En cas de contact avec les yeux, rincer avec de l'eau pendant 15 minutes. En cas de contact avec la peau, bien rincer avec de l'eau.

**USA: CONSUMER PRODUCT SAFETY COMMISSION REGULATIONS (CPSC). FLAMMABLE LIQUID AND VAPOR. HARMFUL IF ABSORBED THROUGH SKIN. HARMFUL OR FATAL IF SWALLOWED. CAUSES RESPIRATORY TRACT, EYE AND SKIN IRRITATION. MAY CAUSE SEVERE ALLERGIC RESPIRATORY AND SKIN REACTION. CANCER HAZARD - CAN CAUSE CANCER. DEVELOPMENTAL TOXICITY TERATOGENIC EFFECTS.**

**WARNING:** This product contains a chemical known to the State of California to cause cancer and birth defects or other reproductive harm.

Can enter lungs and cause damage. Risk of cancer depends on duration and level of exposure. Contains material which can cause birth defects. Contains material which can cause developmental abnormalities. Do not smoke. Do not burn. Do not get in eyes. Do not get on skin or clothing. Use only in a well-ventilated area. Keep away from flames, such as a pilot light, and any object that sparks, such as an electric motor. Store away from heat. Keep out of reach of children.

**FIRST AID TREATMENT:** Contains Xylene; 1,2,4-Trimethylbenzene; Methyl ethyl ketone; Ethylbenzene. If swallowed, call a Poison Control Centre or doctor immediately. Do not induce vomiting. If in eyes, rinse with water for 15 minutes. If on skin, rinse well with water.

**MacDon** *Performance Parts*

**Industrial Paint / *Peinture industrielle***

**DANGER!**
**FLAMMABLE / *INFLAMMABLE***

**One US quart** Part number / *Numéro de pièce* **946 ml**

**DIRECTIONS FOR USE**
THIS PRODUCT IS READY TO USE, NO REDUCER IS REQUIRED.

**APPLICATION**
Spray material at 40 to 55 PSI (275 to 380 kPa).

**USING A PRIMER IS NOT NECESSARY WITH THIS PRODUCT.**

Spray medium wet coat, allow to tack and follow with full wet coat.

**FOR VOC REGULATED AREAS**
These directions refer to the use of products which may be restricted or require special mixing instructions in VOC regulated areas. Follow mixing and usage recommendations in the VOC Compliant Products Chart for your area.

**MODE D'EMPLOI**
CE PRODUIT EST PRÊT À L'UTILISATION, AUCUN DILUANT N'EST REQUIS.

**APPLICATION**
Pulvériser à une pression de 40 à 55 lb/po² (275 à 380 kPa).

**L'UTILISATION D'UN APPRÊT N'EST PAS NÉCESSAIRE AVEC CE PRODUIT.**

Appliquer une couche moyennement chargée, laisser sécher jusqu'à ce qu'elle devienne poisseuse, puis appliquer une couche chargée.

**RÉGLEMENTATION SUR LES COV**
Ces directives concernent l'utilisation de produits pouvant être réglementés ou soumis à des instructions de mélange spéciales dans les régions où les émissions COV sont réglementées. Suivre les recommandations de mélange et d'emploi indiquées au Tableau des produits conformes à la réglementation sur les COV de votre région.

1037431

## PAINT

| Ref | Part Number | Description | Qty | Serial Number |
|---|---|---|---|---|
| 1 | 135148 | PAINT – BLACK (55-65 GLOSS LEVEL), SPRAY CAN, 12 OZ. (340 G) AEROSOL [134] | | |
| | 32879 | PAINT – WHITE, SPRAY CAN, 12 OZ. (340 G) AEROSOL [134] | | |
| | 23950 | PAINT – RED, SPRAY CAN, 12 OZ. (340 G) AEROSOL [134] | | |
| 2 | 25991 | PAINT – BLACK (55-65 GLOSS LEVEL), 1 US QUART (946 ML) | | |
| | 23957 | PAINT – WHITE, 1 US QUART (946 ML) | | |
| | 32880 | PAINT – RED, 1 US QUART (946 ML) | | |

134. To be used for small touch-ups only.

# 35 Tool Operated Latches – Export Only

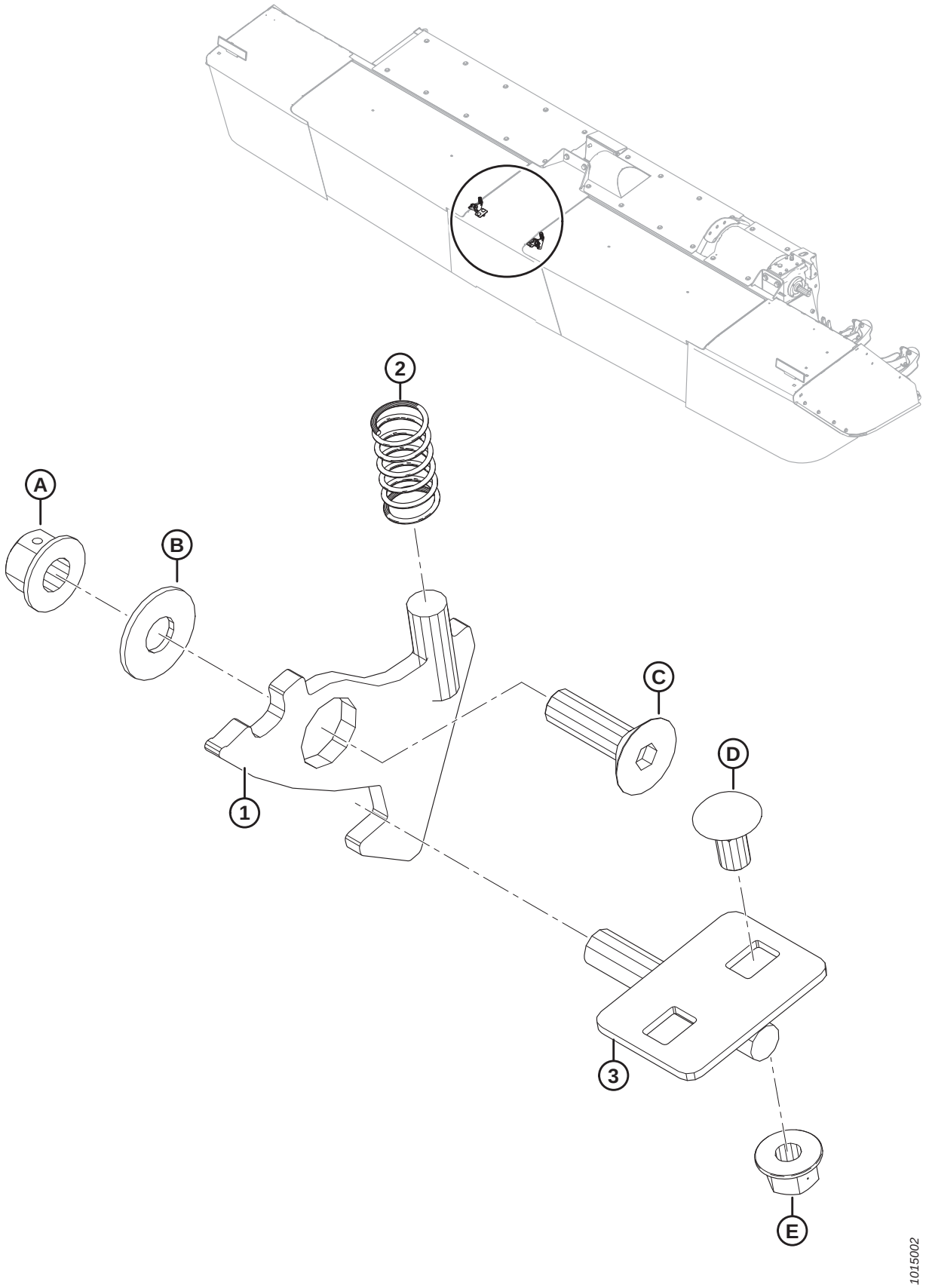

## TOOL OPERATED LATCHES – EXPORT ONLY

| Ref | Part Number | Description | Qty | Serial Number |
|---|---|---|---|---|
| 1 | 246352 | PLATE | 2 | |
| 2 | 35618 | SPRING – COMPRESSION | 2 | |
| 3 | 247315 | LATCH – WELDMENT | 2 | |
| | | | | |
| A | 136431 | NUT – HEX FLG CTR LOC M12 X 1.75-10-A3L | | |
| B | 184587 | WASHER – FLAT, 0.5 IN ID, 1.25 IN OD, 0.109 IN THK | | |
| C | 136401 | SCREW – HEX SOC CSK HD TFL M12 X 1.75 X 40-10.9-AA3L | | |
| D | 184657 | BOLT – RHSSN M10 X 1.5 X 20-8.8-A3L | | |
| E | 135799 | NUT – HEX FLG CTR LOC M10 X 1.5-10-A3L | | |

# 36 (Option) Blade Lowering Kit

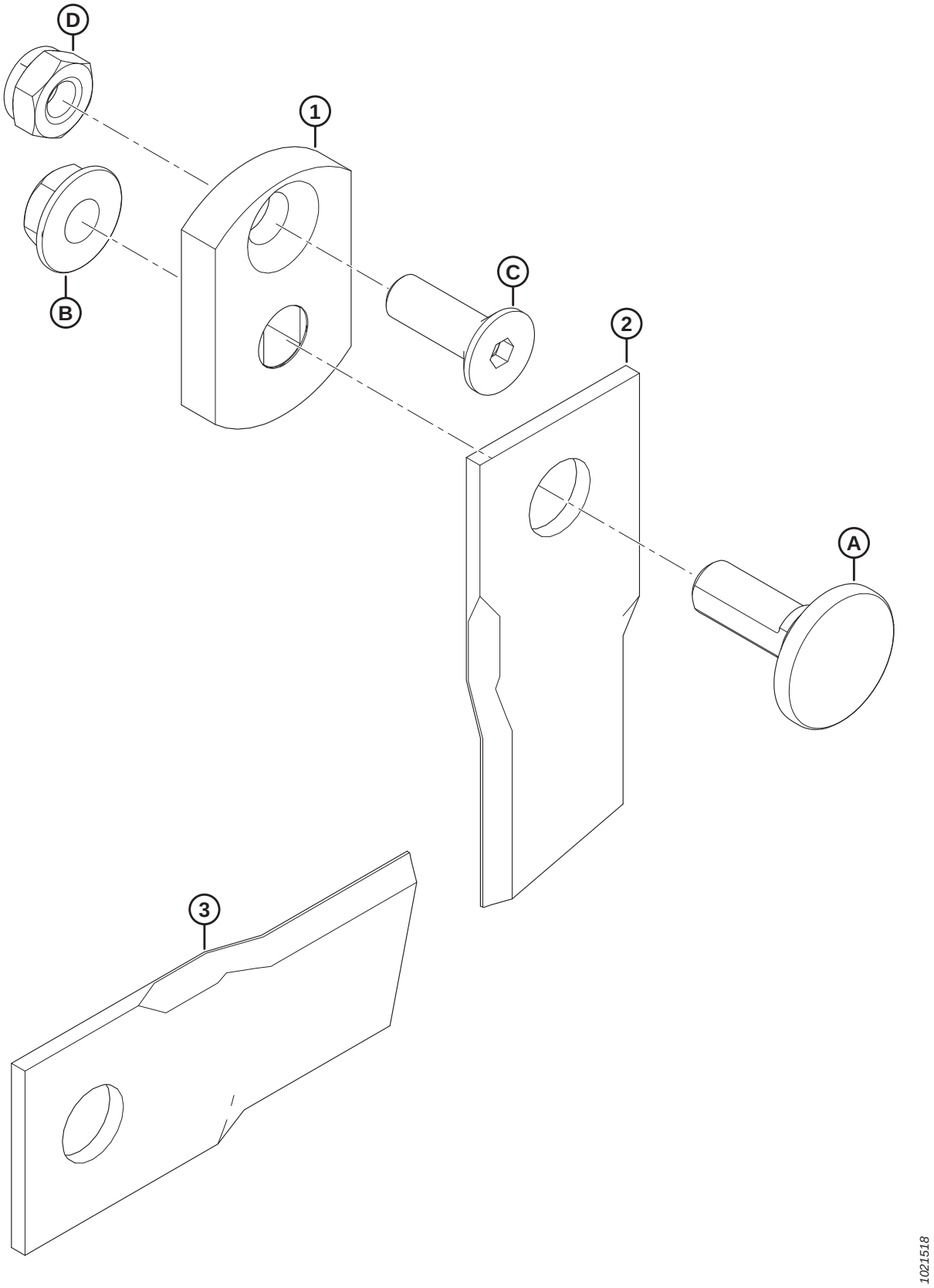

## (OPTION) BLADE LOWERING KIT

| Ref | Part Number | Description | Qty | Serial Number |
|---|---|---|---|---|
| | 257123 | KIT – 18° BLADE LOWERING [135] | | |
| | | | | |
| 1 | 281606 | PLATE – BLADE, 10 MM | 24 | |
| 2 | 259200 | BLADE – 18° CCW BEVEL DOWN, QTY 6 | 4 | |
| 3 | 259199 | BLADE – 18° CW BEVEL DOWN, QTY 6 | 4 | |
| | | | | |
| A | 281604 | BOLT – BLADE | | |
| B | 246300 | NUT – BLADE | | |
| C | 281605 | BOLT – ACCELERATOR | | |
| D | 246303 | NUT – ACCELERATOR | | |

135. Kit includes all listed parts and hardware.

# 37 (Option) Blade Update

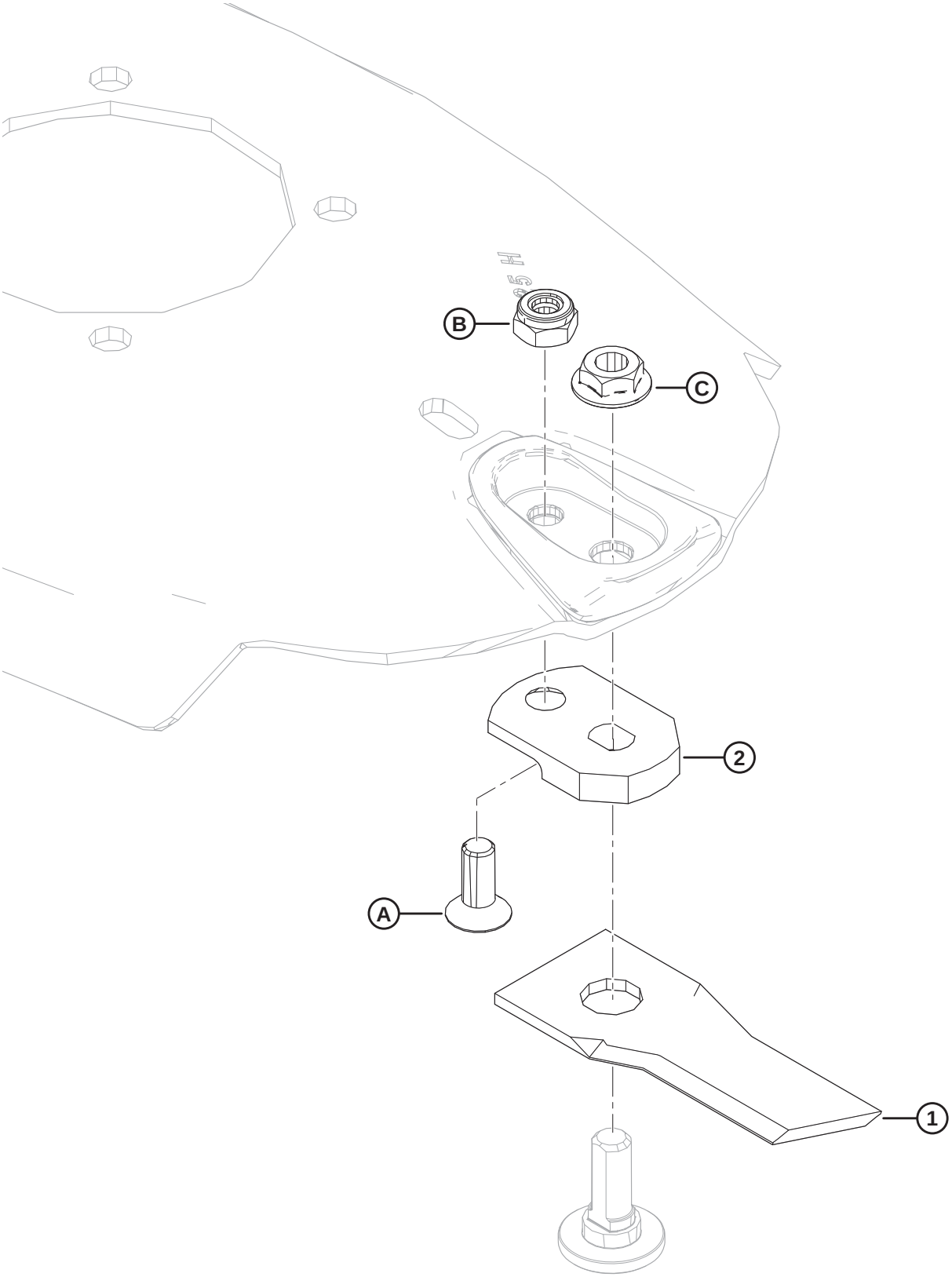


1042193

## (OPTION) BLADE UPDATE

| Ref | Part Number | Description | Qty | Serial Number |
|---|---|---|---|---|
| | 359122 | KIT – UPDATED BLADES [136] | | |
| | | | | |
| 1 | 359066 | BLADE – CCW 18° BEVEL DOWN QTY 6 | 4 | |
| | 359065 | BLADE – CW 18° BEVEL DOWN QTY 6 | 4 | |
| 2 | 338956 | PLATE – BLADE SPACER | 20 | |
| | | | | |
| A | 281965 | BOLT – ACCELERATOR | | |
| B | 246303 | NUT – ACCELERATOR | | |
| C | 246300 | NUT – BLADE | | |

136. The blades included in this kit have a larger cut length, providing a cleaner cut in lighter crops. The kit includes all listed parts and instructions.

# 38 (Option) Drawbar Hitch (2018 and Prior)

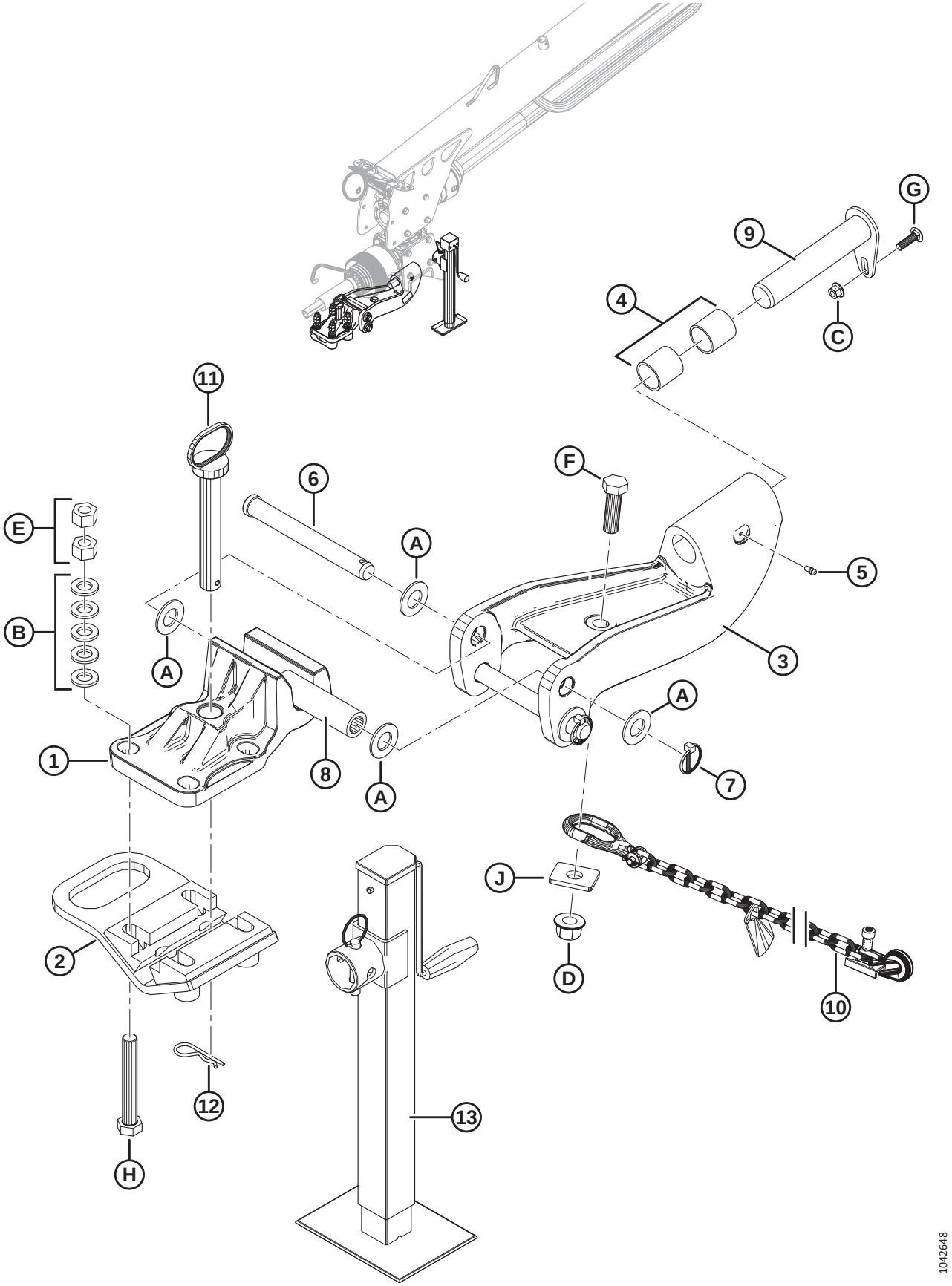

## (OPTION) DRAWBAR HITCH (2018 AND PRIOR)

| Ref | Part Number | Description | Qty | Serial Number |
|---|---|---|---|---|
| | B5808 | KIT – DRAWBAR HITCH ASSEMBLY (2018 AND PRIOR) [137] | | –346189 |
| | | | | |
| 1 | 247237 | MACHINED – DRAWBAR | 1 | –346189 |
| 2 | 259587 | HITCH – LOWER ASM [138] | 1 | –346189 |
| 3 | 247245 | ASSEMBLY – DRAWBAR CASTING C/W BUSHINGS [139] | 1 | –346189 |
| 4 | 281457 | BUSHING | 2 | –346189 |
| 5 | 7782 | FITTING – LUBRICATION 1/4-28 TAPER THD | 1 | –346189 |
| 6 | 197157 | PIN – CLEVIS | 2 | –346189 |
| 7 | 102264 | PIN – LYNCH 3/16 X 1 9/16 IN. | 2 | –346189 |
| 8 | 247246 | BUSHING | 1 | –346189 |
| 9 | 223060 | PIN – WELDT | 1 | –346189 |
| 10 | 21404 | CHAIN – SAFETY 59 IN LG | 1 | –346189 |
| 11 | 224337 | PIN – HITCH | 1 | –346189 |
| 12 | 13125 | PIN – HAIR | 1 | –346189 |
| 13 | **259605** | **JACK** [140] | **1** | **–346189** |
| | | | | |
| A | 18603 | WASHER – SAE FLAT 1 1/16 ID X 2.0 IN OD ZP | | |
| B | 112130 | WASHER – HARDENED | | |
| C | 135799 | NUT – HEX FLG CTR LOC M10 X 1.5-10-A3L | | |
| D | 136122 | NUT – HEX FLG CTR LOC M20 X 2.5-10-A3L | | |
| E | 136124 | NUT – HEX M20 X 2.5-10-A3L | | |
| F | 136157 | BOLT – HEX HD M20 X 2.5 X 65-10.9-A3L | | |
| G | 136248 | BOLT – RHSSN TFL M10 X 1.5 X 35-8.8-A3L | | |
| H | 136887 | BOLT – HEX HD M20 X 2.5 X 140-10.9-A3L | | |
| J | 246178 | WASHER – FLAT RECTANGULAR | | |

137. Kits are available through Whole Goods only.
138. Was previously casting clamp (MD #246578), which has been superseded by lower hitch assembly (MD #259587). Order casting clamp (MD #246578) until stock is depleted, then order lower hitch assembly (MD #259587). Lower hitch assembly includes lower hitch plate (NSS) and two wedge blocks (NSS).
139. Includes bushing (MD #281457).
140. Was previously jack (MD #246321), which has been superseded by jack (MD #259605). Order jack (MD #246321) until stock is depleted, then order jack (MD #259605).

# 39 (Option) Drawbar Hitch (2019–2021)

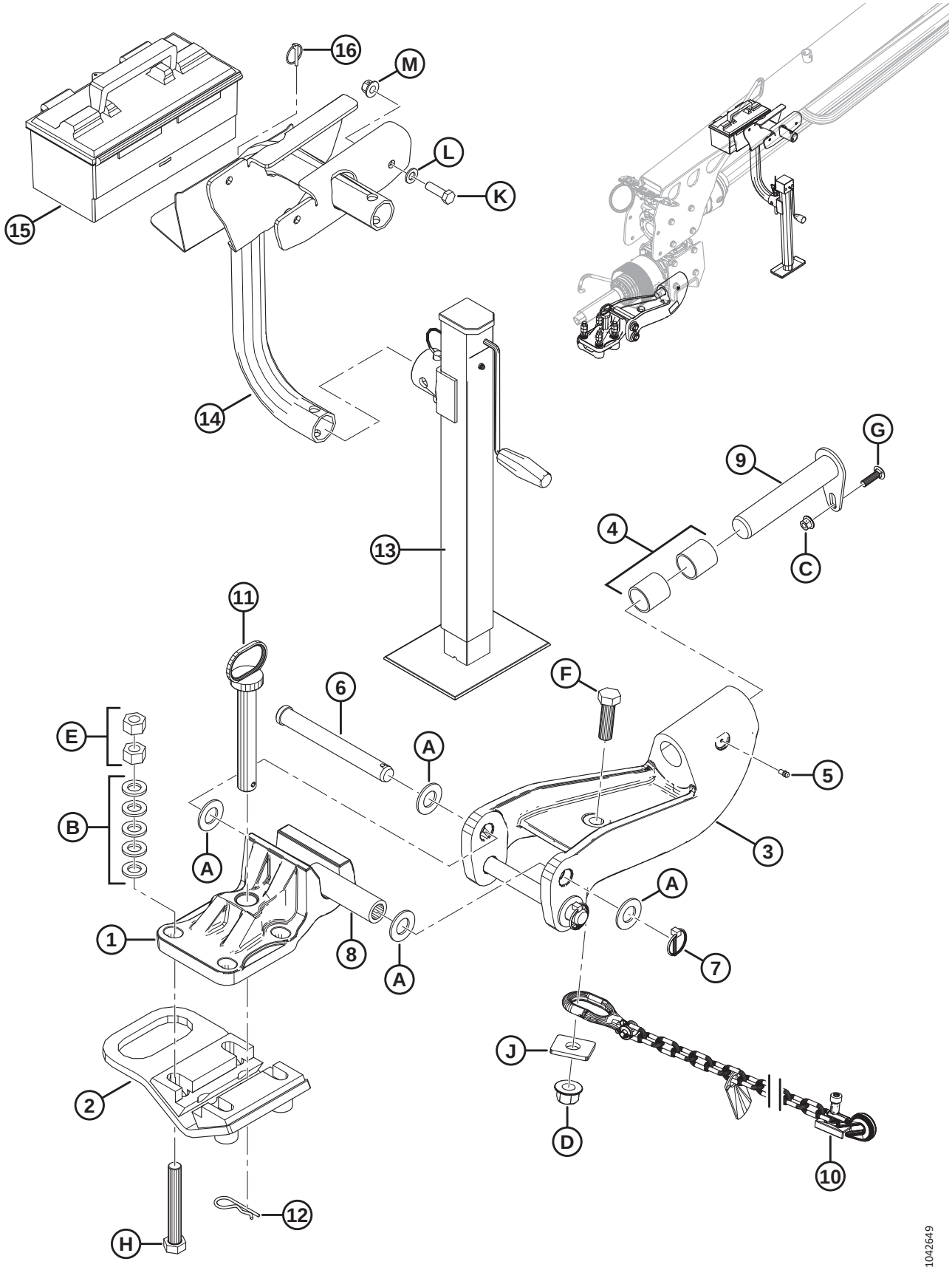

## (OPTION) DRAWBAR HITCH (2019–2021)

**NOTE:**

Two Drawbar Hitch kits (B6633 and B6791) are available for model year 2019 to 2021 units. B6791 includes additional parts (toolbox MD #259419 and lynch pin MD #50193), and a different jack stand tube assembly (MD #259457), which has a mounting location for the toolbox.

| Ref | Part Number | Description | Qty | Serial Number |
|---|---|---|---|---|
| | B6791 | KIT – DRAWBAR HITCH ASSEMBLY (2020–2021) [141] | | 371190–421189 |
| | B6633 | KIT – DRAWBAR HITCH ASSEMBLY (2018–2019) [142] | | 346190–371189 |
| | | | | |
| 1 | 247237 | MACHINED – DRAWBAR | 1 | |
| 2 | 259587 | HITCH – LOWER ASM [143] | 1 | |
| 3 | 247245 | ASSEMBLY – DRAWBAR CASTING C/W BUSHINGS [144] | 1 | |
| 4 | 281457 | BUSHING | 2 | |
| 5 | 7782 | FITTING – LUBRICATION 1/4-28 TAPER THD | 1 | |
| 6 | 197157 | PIN – CLEVIS | 2 | |
| 7 | 102264 | PIN – LYNCH 3/16 X 1 9/16 IN. | 2 | |
| 8 | 247246 | BUSHING | 1 | |
| 9 | 223060 | PIN – WELDT | 1 | |
| 10 | 21404 | CHAIN – SAFETY 59 IN LG | 1 | |
| 11 | 224337 | PIN – HITCH | 1 | |
| 12 | 13125 | PIN – HAIR | 1 | |
| 13 | **259605** | **JACK** [145] | **1** | |
| 14 | 259457 | ASSEMBLY – TUBE JACK STAND WELDMENT [146] | 1 | 371190–421189 |
| | 259154 | ASSEMBLY – TUBE JACK STAND WELDMENT [147] | 1 | 346190–371189 |
| 15 | 259419 | TOOL BOX [146] | 1 | 371190–421189 |
| 16 | 50193 | PIN – LYNCH [146] | 1 | 371190–421189 |
| | | | | |
| A | 18603 | WASHER – SAE FLAT 1 1/16 ID X 2.0 IN OD ZP | | |
| B | 112130 | WASHER – HARDENED | | |
| C | 135799 | NUT – HEX FLG CTR LOC M10 X 1.5-10-A3L | | |
| D | 136122 | NUT – HEX FLG CTR LOC M20 X 2.5-10-A3L | | |
| E | 136124 | NUT – HEX M20 X 2.5-10-A3L | | |
| F | 136157 | BOLT – HEX HD M20 X 2.5 X 65-10.9-A3L | | |
| G | 136248 | BOLT – RHSSN TFL M10 X 1.5 X 35-8.8-A3L | | |
| H | 136887 | BOLT – HEX HD M20 X 2.5 X 140-10.9-A3L | | |
| J | 246178 | WASHER – FLAT RECTANGULAR | | |
| K | 184669 | BOLT – HEX HD M12 X 1.75 X 40-8.8-AA1J | | |

141. Includes toolbox (MD #259419). Kits are available through Whole Goods only.
142. Does not include toolbox (MD #259419). Kits are available through Whole Goods only.
143. Was previously casting clamp (MD #246578), which has been superseded by lower hitch assembly (MD #259587). Order casting clamp (MD #246578) until stock is depleted, then order lower hitch assembly (MD #259587). Lower hitch assembly includes lower hitch plate (NSS) and two wedge blocks (NSS).
144. Includes bushing (MD #281457).
145. Was previously jack (MD #246321), which has been superseded by jack (MD #259605). Order jack (MD #246321) until stock is depleted, then order jack (MD #259605).
146. Included in B6791 only. Assembly (MD #259457) includes a support mount for toolbox (MD #259419).
147. Included in B6633 only.

## (OPTION) DRAWBAR HITCH (2019–2021)

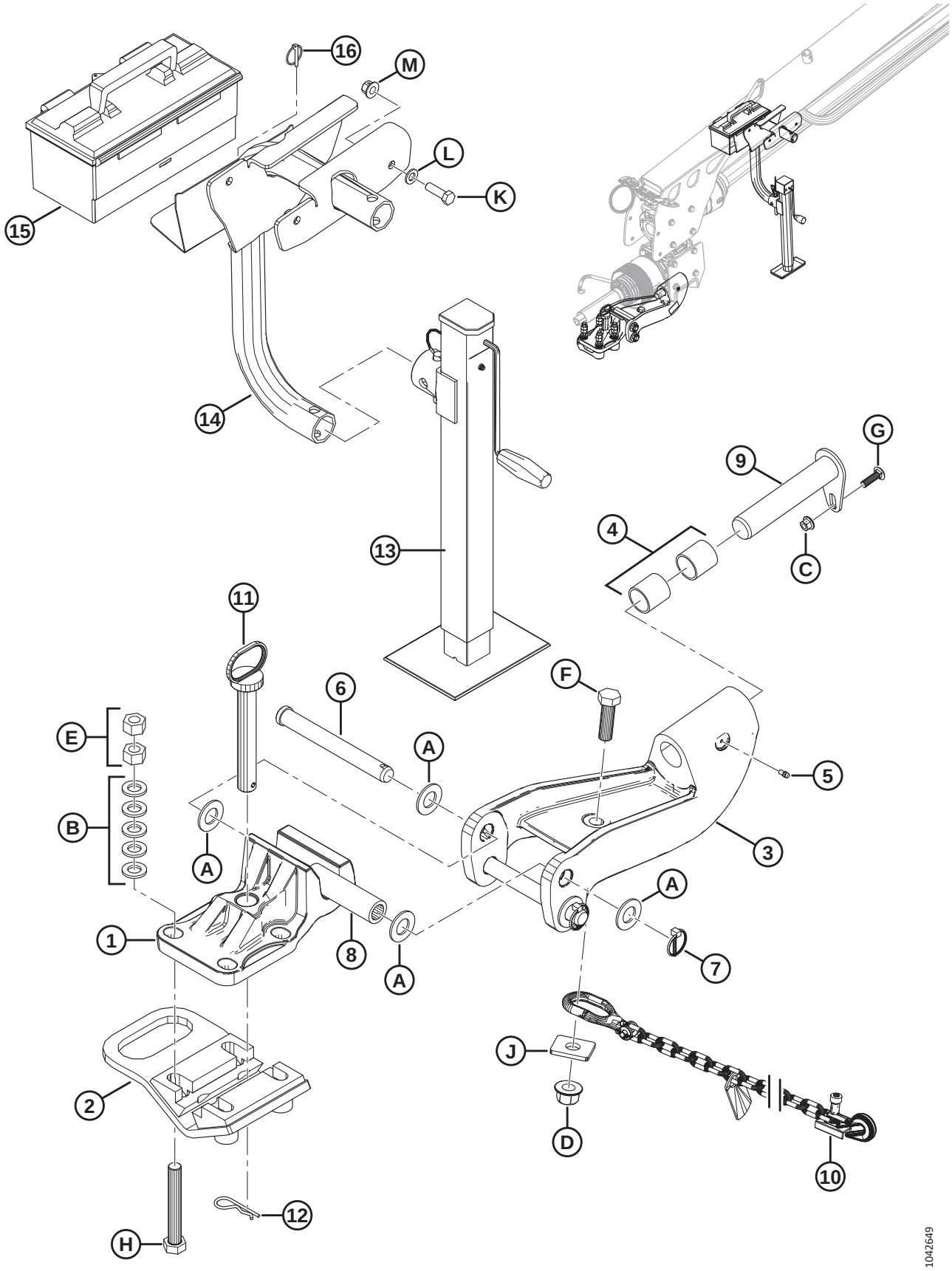

## (OPTION) DRAWBAR HITCH (2019–2021)

| Ref | Part Number | Description | Qty | Serial Number |
|---|---|---|---|---|
| L | 184714 | WASHER – FLAT REG M12-300HV | | |
| M | 136431 | NUT – HEX FLG CTR LOC M12 X 1.75-10 | | |

# 40 (Option) Drawbar Hitch (2022 and Later)

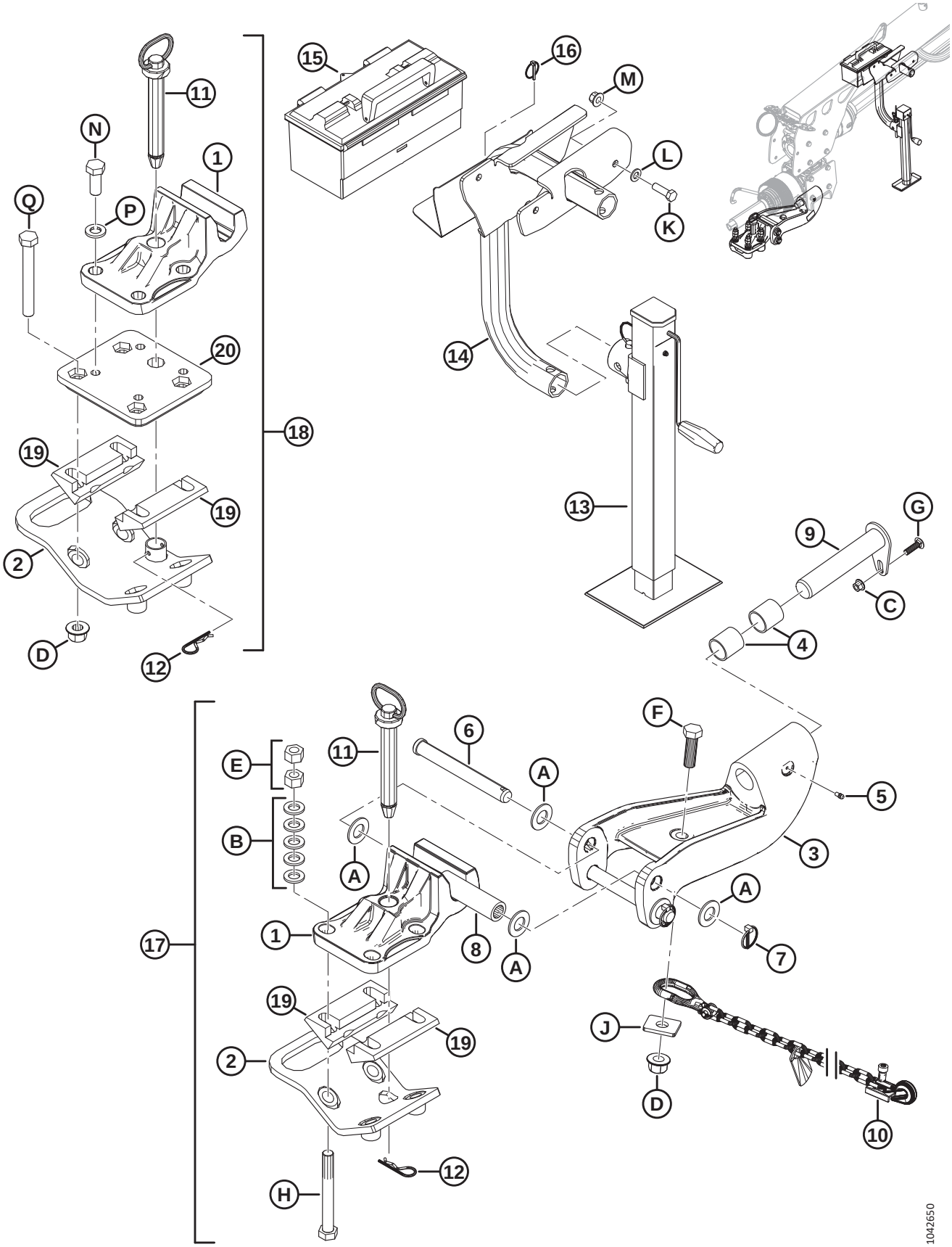

## (OPTION) DRAWBAR HITCH (2022 AND LATER)

**NOTE:**

Two Drawbar Hitch kits (B6997 and B6996) are available for model year 2022 and later units. B6997 includes parts specific to Category 3 drawbar hitches, and B6996 includes parts specific to Category 4 drawbar hitches; Category 3 and Category 4 drawbar hitches are **NOT** interchangeable, ensure that the correct category hitch is selected for the relevant equipment.

| Ref | Part Number | Description | Qty | Serial Number |
|---|---|---|---|---|
| | B6997 | KIT – CAT3 DRAWBAR HITCH ASSEMBLY [148] | | 421190– |
| | B6996 | KIT – CAT4 DRAWBAR HITCH ASSEMBLY [148] | | 421190– |
| | | | | |
| 1 | 247237 | MACHINED – DRAWBAR | 1 | 421190– |
| 2 | NSS | HITCH – LOWER WELDT (CAT3) [149] | 1 | 421190– |
| | NSS | HITCH – LOWER WELDT (CAT4) [150] | 1 | 421190– |
| 3 | 247245 | ASSEMBLY – DRAWBAR CASTING C/W BUSHINGS [151] | 1 | 421190– |
| 4 | 281457 | BUSHING | 2 | 421190– |
| 5 | 7782 | FITTING – LUBRICATION 1/4-28 TAPER THD | 1 | 421190– |
| 6 | 197157 | PIN – CLEVIS | 2 | 421190– |
| 7 | 102264 | PIN – LYNCH 3/16 X 1 9/16 IN. | 2 | 421190– |
| 8 | 247246 | BUSHING | 1 | 421190– |
| 9 | 223060 | PIN – WELDT | 1 | 421190– |
| 10 | 21404 | CHAIN – SAFETY 59 IN LG | 1 | 421190– |
| 11 | 224337 | PIN – HITCH | 1 | 421190– |
| 12 | 13125 | PIN – HAIR | 1 | 421190– |
| 13 | **259605** | **JACK** | **1** | **421190–** |
| 14 | 259457 | ASSEMBLY – TUBE JACK STAND WELDMENT [152] | 1 | 421190– |
| 15 | 259419 | TOOL BOX | 1 | 421190– |
| 16 | 50193 | PIN – LYNCH | 1 | 421190– |
| 17 | 259431 | HITCH – CAT 3 WEDGE [153] | 1 | 421190– |
| 18 | 259438 | HITCH – CAT 4 WEDGE [154] | 1 | 421190– |
| 19 | NSS | BLOCK – WEDGE | 2 | |
| 20 | NSS | PLATE – CAT 4 DRAWBAR MACHINED | 1 | |
| | | | | |
| A | 18603 | WASHER – SAE FLAT 1 1/16 ID X 2.0 IN OD ZP | | |
| B | 112130 | WASHER – HARDENED | | |
| C | 135799 | NUT – HEX FLG CTR LOC M10 X 1.5-10-A3L | | |
| D | 136122 | NUT – HEX FLG CTR LOC M20 X 2.5-10-A3L | | |
| E | 136124 | NUT – HEX M20 X 2.5-10-A3L | | |
| F | 136157 | BOLT – HEX HD M20 X 2.5 X 65-10.9-A3L | | |

148. Category 3 and Category 4 drawbar hitches are **NOT** interchangeable. Kits are available through Whole Goods only.
149. Category 3 hitch.
150. Category 4 hitch.
151. Includes bushing (MD #281457).
152. Assembly (MD #259457) includes a support mount for toolbox (MD #259419).
153. Category 3 wedge hitch (MD #259431) includes drawbar (MD #247237), lower hitch plate (NSS), two wedge blocks (NSS), hitch pin (MD #224337), hair pin (MD #13125), four bolts (MD #136650), four washers (MD #112130), and eight nuts (MD #136124).
154. Category 4 wedge hitch (MD #259438) includes drawbar (MD #247237), lower hitch plate (NSS), two wedge blocks (NSS), CAT4 drawbar plate (NSS), hitch pin (MD #224337), hair pin (MD #13125), four bolts (MD #136082), four washers (MD #2140), four nuts (MD #136122), and four bolts (MD #136422).

## (OPTION) DRAWBAR HITCH (2022 AND LATER)

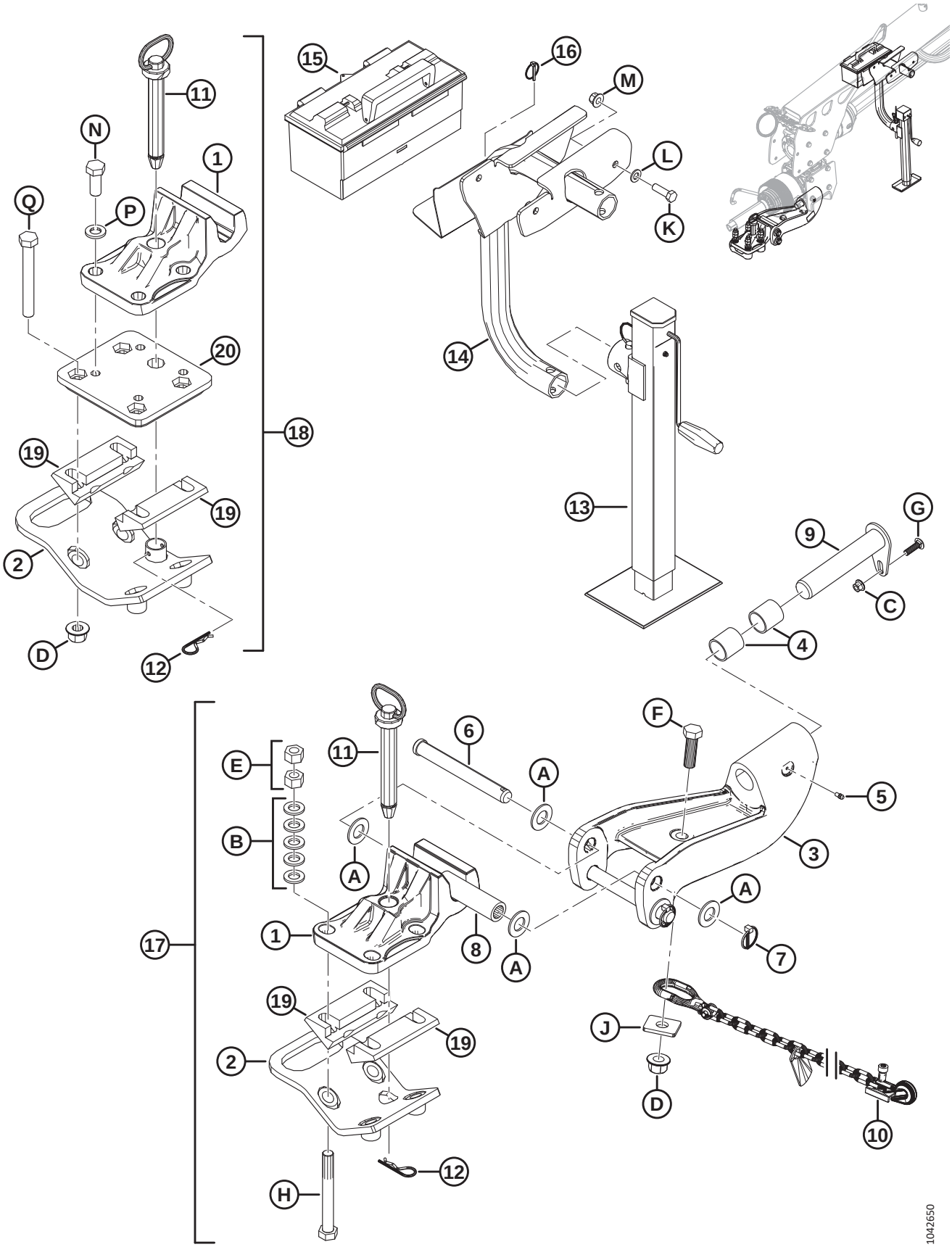

## (OPTION) DRAWBAR HITCH (2022 AND LATER)

| Ref | Part Number | Description | Qty | Serial Number |
|---|---|---|---|---|
| G | 136248 | BOLT – RHSSN TFL M10 X 1.5 X 35-8.8-A3L | | |
| H | 136650 | BOLT – HEX HD M20 X 2.5 X 170-8.8 | | |
| J | 246178 | WASHER – FLAT RECTANGULAR | | |
| K | 184669 | BOLT – HEX HD M12 X 1.75 X 40-8.8-AA1J | | |
| L | 184714 | WASHER – FLAT REG M12-300HV | | |
| M | 136431 | NUT – HEX FLG CTR LOC M12 X 1.75-10 | | |
| N | 136082 | BOLT – HEX HD TFL M20 X 2.5 X 50-8.8-AA3L | | |
| P | 21540 | WASHER – HARD ASTM F436 M20-340HV-AB2C | | |
| Q | 136422 | BOLT – HEX HD M20 X 2.5 X 160-8.8-AA1J | | |

# 41 (Option) Driveline Extension Kit (2017 and Prior)

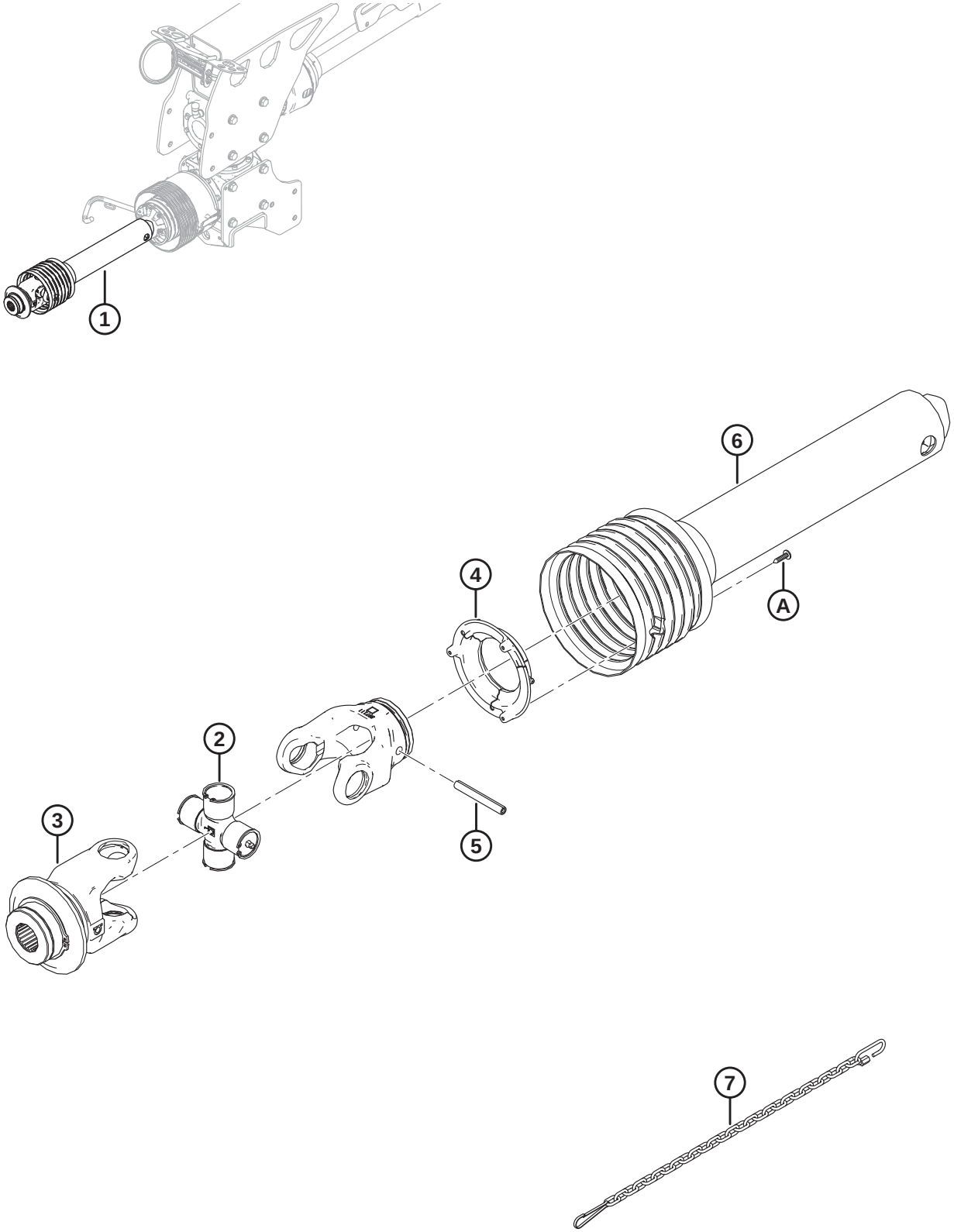


1033106

## (OPTION) DRIVELINE EXTENSION KIT (2017 AND PRIOR)

| Ref | Part Number | Description | Qty | Serial Number |
|---|---|---|---|---|
| | B6390 | KIT – 1.375 IN. 21T FRONT HALF DRIVELINE EXTENDED [155] | | –321189 |
| | B6391 | KIT – 1.75 IN. 20T FRONT HALF DRIVELINE EXTENDED [156] | | –321189 |
| | | | | |
| 1 | 259019 | DRIVELINE – 1.375 IN. 21T HALF | 1 | –321189 |
| | 259020 | DRIVELINE – 1.75 IN. 20T HALF | 1 | –321189 |
| 2 | 247123 | CROSS KIT | 1 | –321189 |
| 3 | 247162 | YOKE [157] | 1 | –321189 |
| | 247161 | YOKE [158] | 1 | –321189 |
| 4 | 247127 | SHIELD SUPPORT (OUTER) | 1 | –321189 |
| 5 | **256663** | **ROLL PIN (10 X 75)** [157] | **1** | **–321189** |
| | 247126 | ROLL PIN (10 X 65) [158] | 1 | –321189 |
| 6 | 281653 | SHIELD KIT (PTO AND IMPLEMENT) [157] | 1 | –321189 |
| | 281654 | SHIELD KIT (PTO AND IMPLEMENT) [158] | 1 | –321189 |
| 7 | 111242 | SHIELD CHAIN | 1 | –321189 |
| | | | | |
| A | 247128 | SCREW | | |

155. Includes 21-tooth spline half driveline (MD #259019) and instructions. Kits are available through Whole Goods only.
156. Includes 20-tooth spline half driveline (MD #259020) and instructions. Kits are available through Whole Goods only.
157. For 21-tooth spline half driveline (MD #259019).
158. For 20-tooth spline half driveline (MD #259020).

# 42 (Option) Driveline Extension Kit (2018 and Later)

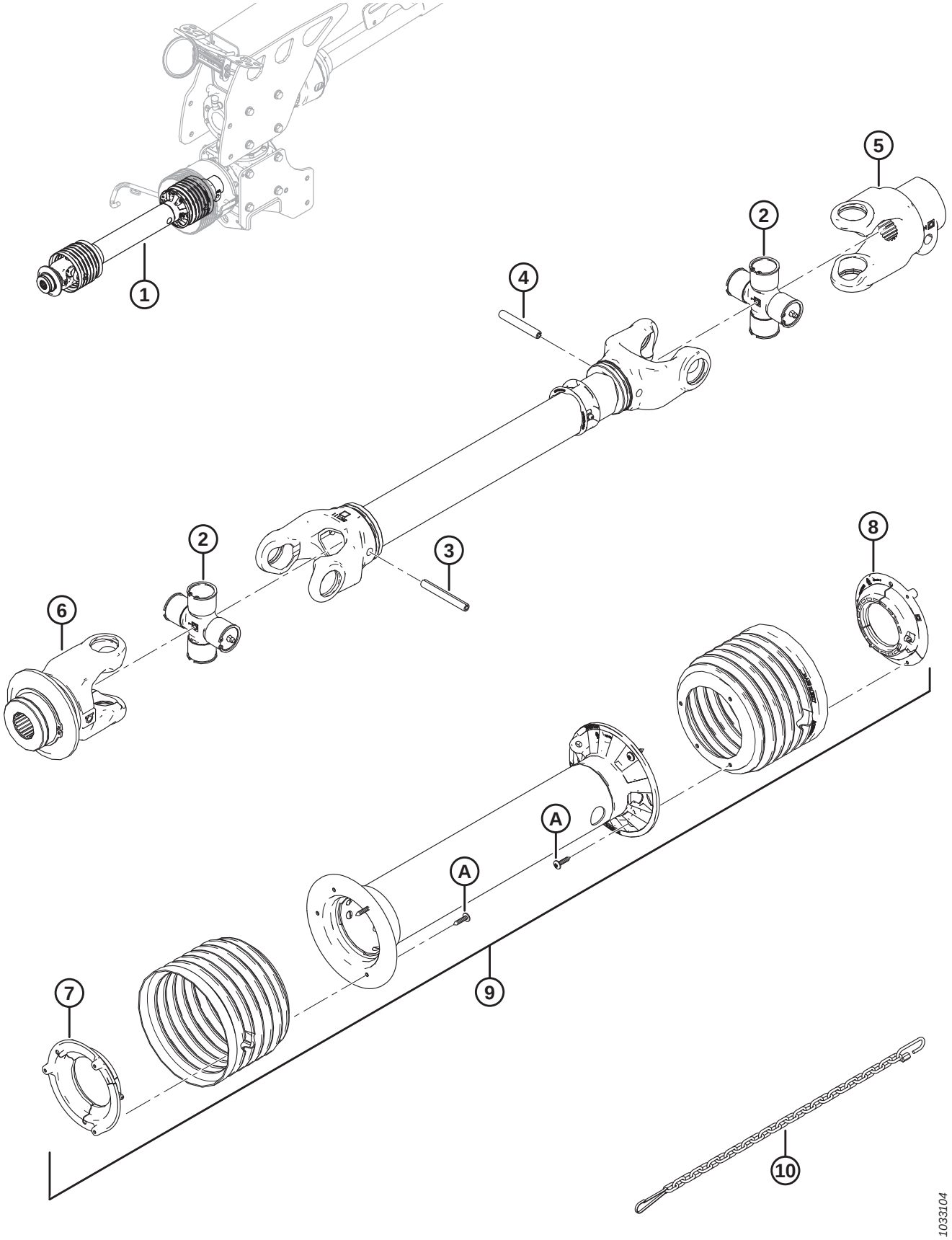

## (OPTION) DRIVELINE EXTENSION KIT (2018 AND LATER)

| Ref | Part Number | Description | Qty | Serial Number |
|---|---|---|---|---|
| | B6555 | KIT – 1.375 IN. 21T DRIVELINE EXT [159] | | 321190– |
| | B6556 | KIT – 1.75 IN. 20T DRIVELINE EXT [160] | | 321190– |
| | | | | |
| 1 | 256661 | DRIVELINE – 1.375 IN. 21T, EXT | 1 | 321190– |
| | 256666 | DRIVELINE – 1.75 IN. 20T, EXT | 1 | 321190– |
| 2 | 247123 | CROSS KIT | 2 | 321190– |
| 3 | 256663 | ROLL PIN (10 X 75) | 1 | 321190– |
| 4 | 247126 | ROLL PIN (10 X 65) | 1 | 321190– |
| 5 | 247124 | YOKE (IMPLEMENT) | 1 | 321190– |
| 6 | 247162 | YOKE (PTO) [161] | 1 | 321190– |
| | 247161 | YOKE (PTO) [162] | 1 | 321190– |
| 7 | 247127 | SHIELD SUPPORT (OUTER) | 1 | 321190– |
| 8 | 247129 | SHIELD SUPPORT (INNER) | 1 | 321190– |
| 9 | 256665 | SHIELD KIT [163] | 1 | 321190– |
| | 256668 | SHIELD KIT [164] | 1 | 321190– |
| | 281653 | SHIELD KIT [165] | 1 | 321190– |
| | 281654 | SHIELD KIT [166] | 1 | 321190– |
| 10 | 256674 | SHIELD CHAIN [167] | 1 | 321190– |
| | 111242 | SHIELD CHAIN [168] | 1 | 321190– |
| | | | | |
| A | 247128 | SCREW | | |

159. Includes 21-tooth spline driveline (MD #256661) and instructions. Kits are available through Whole Goods only.
160. Includes 20-tooth spline driveline (MD #256666) and instructions. Kits are available through Whole Goods only.
161. For 21-tooth spine driveline (MD #256661) and superseded 21-tooth spline driveline (MD #281975).
162. For 20-tooth spine driveline (MD #256666) and superseded 20-tooth spline driveline (MD #281977).
163. For 21-tooth spline driveline (MD #256661).
164. For 20-tooth spline driveline (MD #256666).
165. For superseded 21-tooth spline driveline (MD #281975).
166. For superseded 20-tooth spline driveline (MD #281977).
167. For 21-tooth spline driveline (MD #256661) and 20-tooth spine driveline (MD #256666).
168. For superseded 21-tooth spline driveline (MD #281975) and superseded 20-tooth spline driveline (MD #281977).

# 43 (Option) Tractor Utility Hitch Adapter

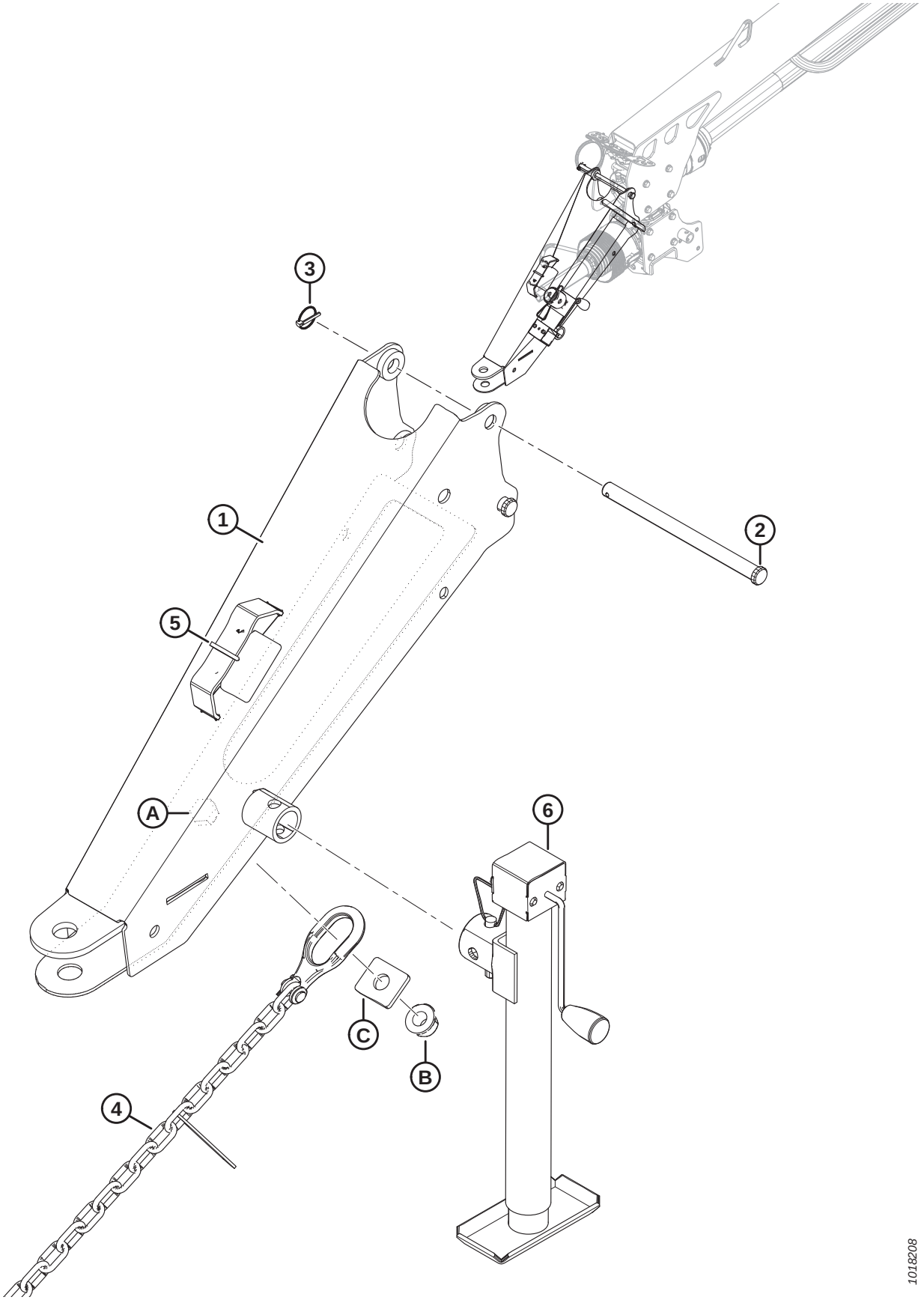

## (OPTION) TRACTOR UTILITY HITCH ADAPTER

| Ref | Part Number | Description | Qty | Serial Number |
|---|---|---|---|---|
| | B5802 | KIT – TRACTOR UTILITY HITCH ADAPTER [169] | | |
| | | | | |
| 1 | 223326 | HITCH – TRANSPORT | 1 | |
| 2 | 135402 | PIN – CLEVIS | 2 | |
| 3 | 50193 | PIN – LYNCH | 2 | |
| 4 | 21404 | CHAIN – SAFETY 59 LINK | 1 | |
| 5 | 21763 | FASTENER – CABLE TIE (BLACK) | 1 | |
| 6 | **259605** | **JACK** [170] | **1** | |
| | | | | |
| A | 136080 | BOLT – HEX HD M20 X 2.5 X 60-8.8-A3L | | |
| B | 136122 | NUT – HEX FLG CTR LOC M20 X 2.5-10-A3L | | |
| C | 246178 | WASHER – FLAT RECTANGULAR | | |

169. Allows for the quick connection of the pull-type to a tractor drawbar regardless of the installed hitch option. Kits are available through Whole Goods only.
170. Was previously jack (MD #246321), which has been superseded by jack (MD #259605). Order jack (MD #246321) until stock is depleted, then order jack (MD #259605).

# 44 (Option) Hydraulic Header Angle (2015)

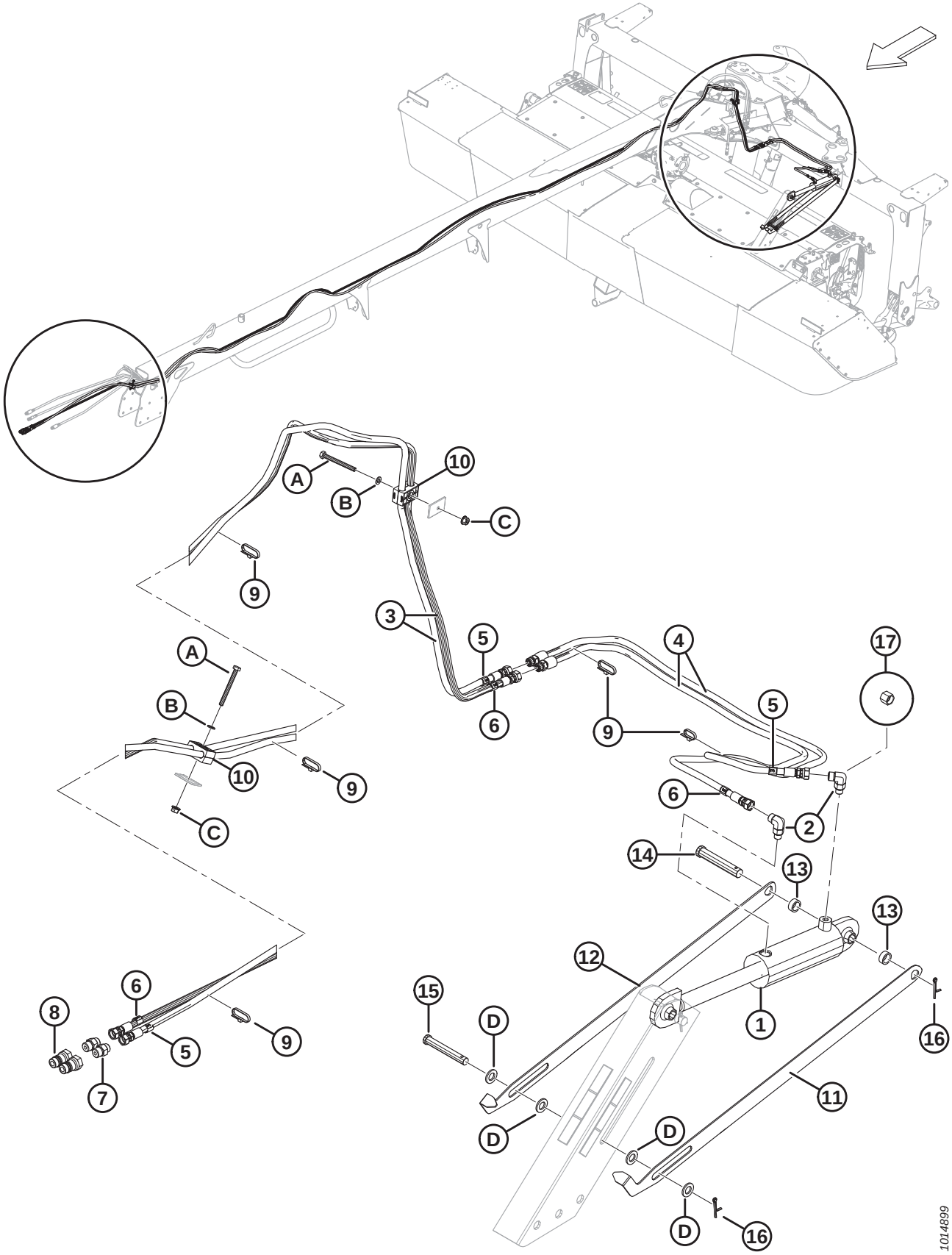

## (OPTION) HYDRAULIC HEADER ANGLE (2015)

| Ref | Part Number | Description | Qty | Serial Number |
|---|---|---|---|---|
| | B5760 | KIT – HYDRAULIC HEADER ANGLE, ROTARY PT [171] | | |
| | | | | |
| 1 | 149767 | CYLINDER – HYDRAULIC | 1 | 266820–285419 |
| | 150519 | SEAL KIT | | |
| 2 | 136095 | FITTING – ELBOW 90° HYD | 2 | 266820–285419 |
| | 50219 | O-RING – SAE #6 | | |
| | 135865 | O-RING – #6 ORFS | | |
| 3 | 224164 | HOSE – HYD, 0.25 IN ID, 9250 MM LG [172] | 2 | 266820–285419 |
| 4 | 224165 | HOSE – HYD, 0.25 IN ID, 1460 MM LG [173] | 2 | 266820–285419 |
| 5 | 136317 | COLLAR – HOSE IDENTIFICATION, RED 3 | 3 | 266820–285419 |
| 6 | 136320 | COLLAR – HOSE IDENTIFICATION, BLUE 3 | 3 | 266820–285419 |
| 7 | 191705 | FITTING – ADAPTER 6 MORFS X 8 MORB | 2 | 266820–285419 |
| | 44209 | O-RING – SAE #8 | | |
| | 135865 | O-RING – #6 ORFS | | |
| 8 | 135563 | FITTING – COUPLING HYD | 2 | 266820–285419 |
| 9 | 21763 | FASTENER – CABLE TIE (BLACK) | 7 | 266820–285419 |
| 10 | 232395 | CLAMP – ASSEMBLY | 2 | 266820–285419 |
| 11 | 223587 | LINK – INDICATOR, LH | 1 | 266820–285419 |
| 12 | 246769 | LINK – INDICATOR, RH | 1 | 266820–285419 |
| 13 | 246036 | SPACER – 17.5 MM ID, 25.4 MM OD, 10 MM LG | 2 | 266820–285419 |
| 14 | 18629 | PIN – CLEVIS, 18.89 MM, 95 MM | 1 | 266820–285419 |
| 15 | 103580 | PIN – CLEVIS | 1 | 266820–285419 |
| 16 | 18608 | PIN – COTTER 3/16 DIA X 1.5 ZP | 2 | 266820–285419 |
| 17 | 136325 | CAP – HYD SAE 6 ORFS [174] | 2 | 266820–285419 |
| | | | | |
| A | 252421 | BOLT – HEX HD M8 X 1.25 X 80-8.8-A2L | | |
| B | 184708 | WASHER – FLAT M8-200HV-A2L | | |
| C | 135337 | NUT – HEX FLG CTR LOC M8 X 1.25-8-A2L | | |
| D | 184717 | WASHER – FLAT REG M16-200HV-A3L | | |

171. Kits are available through Whole Goods only.
172. Connect to hose (MD #224165) on R116 only. On R113, hose (MD #224165) is not required, connect directly to cylinder fittings (MD #136095). Follow same path through carrier frame. Note collar locations for proper cylinder hookups.
173. Used only on R116. Note collar locations for proper cylinder hookups.
174. Shipped with cylinder. Remove from fitting (MD #136095) before hose installation.

# 45 (Option) Hydraulic Header Angle (2016 and Later)

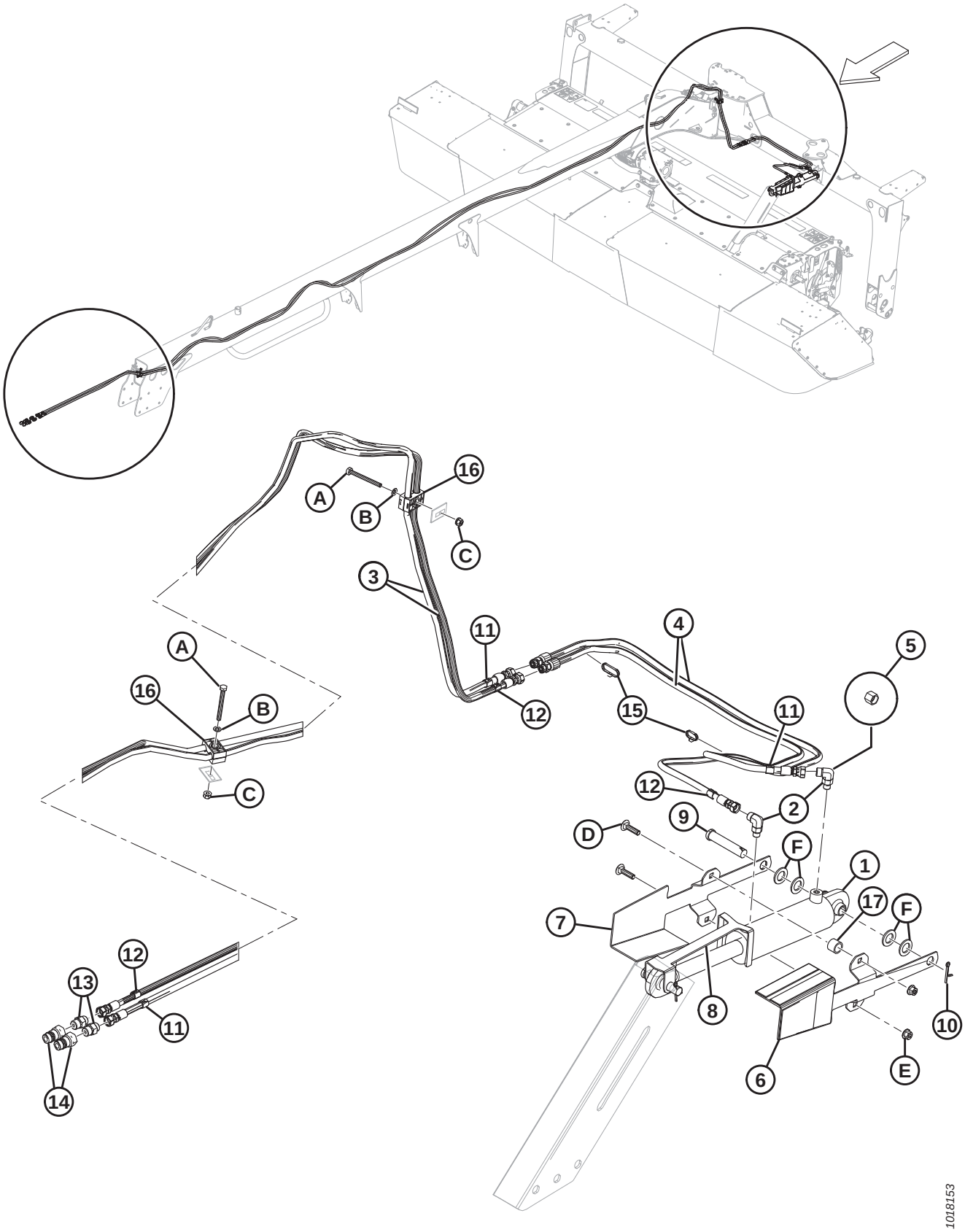

## (OPTION) HYDRAULIC HEADER ANGLE (2016 AND LATER)

| Ref | Part Number | Description | Qty | Serial Number |
|---|---|---|---|---|
| | B5810 | KIT – HYDRAULIC HEADER ANGLE, ROTARY PT [175] | | |
| | | | | |
| 1 | 149767 | CYLINDER – HYDRAULIC | 1 | 285420– |
| | 150519 | SEAL KIT | | |
| 2 | 136095 | FITTING – ELBOW 90° HYD | 2 | 285420– |
| | 50219 | O-RING – SAE #6 | | |
| | 135865 | O-RING – #6 ORFS | | |
| 3 | 224164 | HOSE – HYD, 0.25 IN ID, 9250 MM LG [176] | 2 | 285420– |
| 4 | 224165 | HOSE – HYD, 0.25 IN ID, 1460 MM LG [177] | 2 | 285420– |
| 5 | 136325 | CAP – HYD SAE -6 ORFS | 2 | 285420– |
| 6 | 281347 | ASSY – INDICATOR DECALS, LH | 1 | 285420– |
| | 281111 | DECAL – GAUGE | 2 | |
| | 281112 | DECAL – GAUGE | 1 | |
| 7 | 281348 | ASSY – INDICATOR DECALS, RH | 1 | 285420– |
| | 281112 | DECAL – GAUGE | 1 | |
| 8 | 281535 | INDICATOR – HYDRAULIC TILT, ROD | 1 | 285420– |
| 9 | 20312 | PIN – CLEVIS | 1 | 285420– |
| 10 | 18608 | PIN – COTTER 3/16 DIA X 1.5 ZP | 1 | 285420– |
| 11 | 136317 | COLLAR – HOSE IDENTIFICATION, RED 3 | 2 | 285420– |
| 12 | 136320 | COLLAR – HOSE IDENTIFICATION, BLUE 3 | 2 | 285420– |
| 13 | 191705 | FITTING – ADAPTER 6 MORFS X 8 MORB | 2 | 285420– |
| | 44209 | O-RING – SAE #8 | | |
| | 135865 | O-RING – #6 ORFS | | |
| 14 | 135563 | FITTING – COUPLING HYD | 2 | 285420– |
| 15 | 21763 | FASTENER – CABLE TIE (BLACK) | 7 | 285420– |
| 16 | 232395 | CLAMP – ASSEMBLY | 2 | 285420– |
| 17 | 281349 | SPACER | 2 | 285420– |
| | | | | |
| A | 252421 | BOLT – HEX HD M8 X 1.25 X 80-8.8-AA2L | 2 | |
| B | 184708 | WASHER – FLAT M8-200HV-A2L | 2 | |
| C | 135337 | NUT – HEX FLG CTR LOC M8 X 1.25-8-A2L | 2 | |
| D | 152732 | BOLT – RHSN M10 X 1.5 X 40-8.8-A3L | 2 | |
| E | 135799 | NUT – HEX FLG CTR LOC M10 X 1.5-10-A3L | 2 | |
| F | 136477 | WASHER – FLAT REG M20-200HV-A3L | 4 | |

175. Kits are available through Whole Goods only.
176. Connect to hose (MD #224165) on R116 only. On R113, hose (MD #224165) is not required, connect directly to cylinder fittings (MD #136095). Follow same path through carrier frame. Note collar locations for proper cylinder hookups.
177. Used only on R116. Note collar locations for proper cylinder hookups.

# 46 (Option) Quick Change Blade Kit

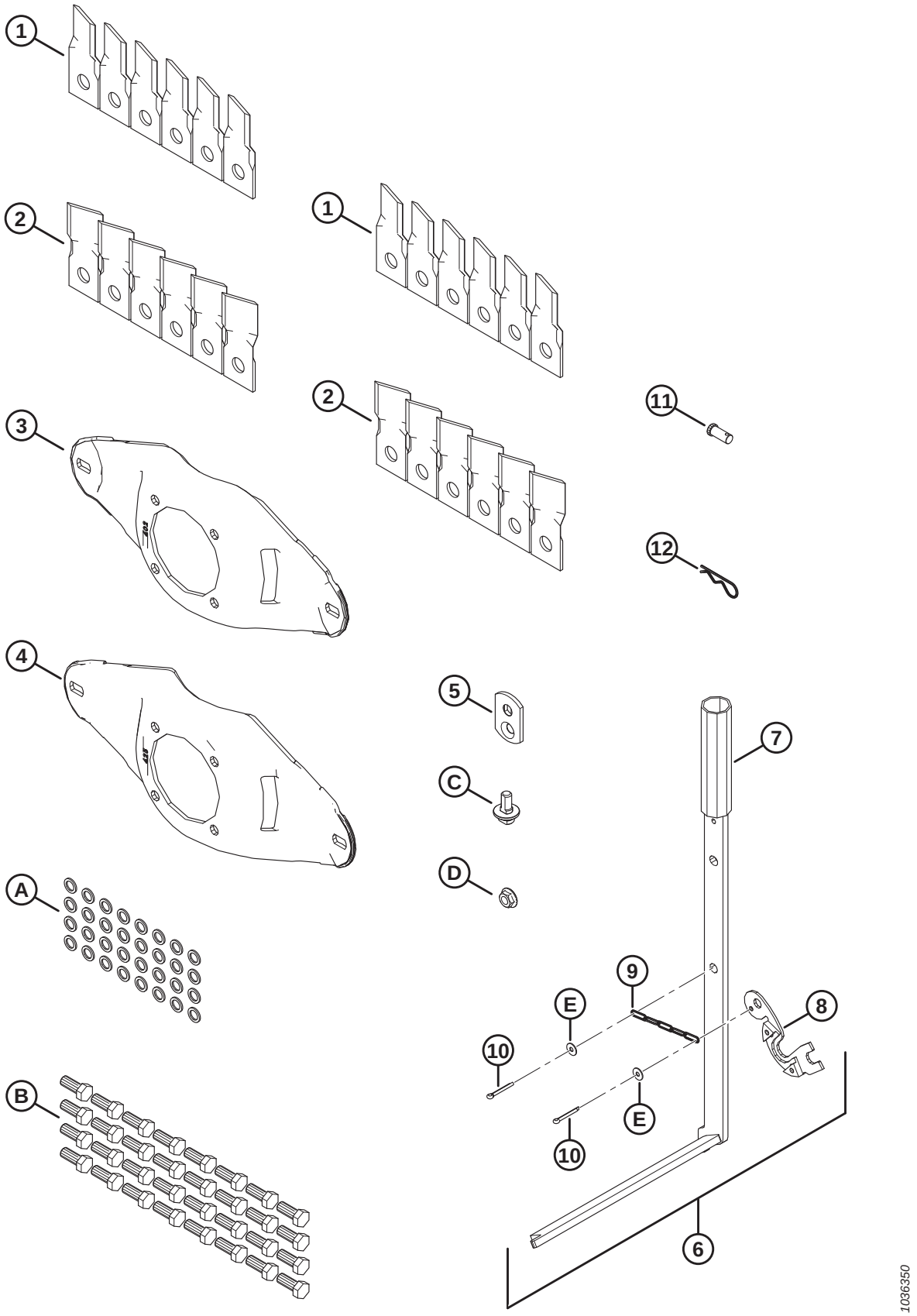

## (OPTION) QUICK CHANGE BLADE KIT

| Ref | Part Number | Description | 8/10 Disc Qty | Serial Number |
|---|---|---|---|---|
| | B6699 | KIT – QCB, 8 DISC [178] | | |
| | B6700 | KIT – QCB, 10 DISC [178] | | |
| | | | | |
| | 257136 | KIT – QCB, 8 DISC [179] | | |
| | 257135 | KIT – QCB, 10 DISC [179] | | |
| | | | | |
| 1 | 259200 | BLADE – CCW 18° BEVEL DOWN, QTY 6 | 2/2 | |
| 2 | 259199 | BLADE – CW 18° BEVEL DOWN, QTY 6 | 2/2 | |
| 3 | 281365 | PLATE – QUICK CHANGE, 402 MM | 2/2 | |
| 4 | 281364 | PLATE – QUICK CHANGE, 425MM | 6/8 | |
| 5 | 246301 | PLATE – BLADE | 16/20 | |
| 6 | 259112 | KIT – BLADE CHANGE [180] | 1/1 | |
| 7 | 281362 | TOOL – BLADE CHANGE | 1/1 | |
| 8 | 281755 | GAUGE – QUICK CHANGE | 1/1 | |
| 9 | 259113 | CHAIN – QUICK CHANGE | 1/1 | |
| 10 | 259117 | PIN – COTTER | 2/2 | |
| 11 | 281931 | PIN – CLEVIS 7/16 X 1 | 1/1 | |
| 12 | 15380 | PIN – HAIR | 1/1 | |
| | | | | |
| A | 246952 | WASHER – M12-LOCKING-DISC | | |
| B | 30630 | BOLT – HEX HD TFL M12 X 1.75 X 30-8.8-A3L | | |
| C | 281363 | BOLT – BLADE, QUICK CHANGE | | |
| D | 246300 | NUT – BLADE | | |
| E | 184701 | WASHER – FLAT LARGE M5-200HV | | |

178. Includes all listed parts and instructions. Kits are available through Whole Goods only.
179. Includes all listed parts and instructions.
180. Includes tool (MD #281362), gauge (MD #281755), chain (MD #259113), two pins (MD #259117), and two washers (MD #184701).

# 47 (Option) R1 Service Kit

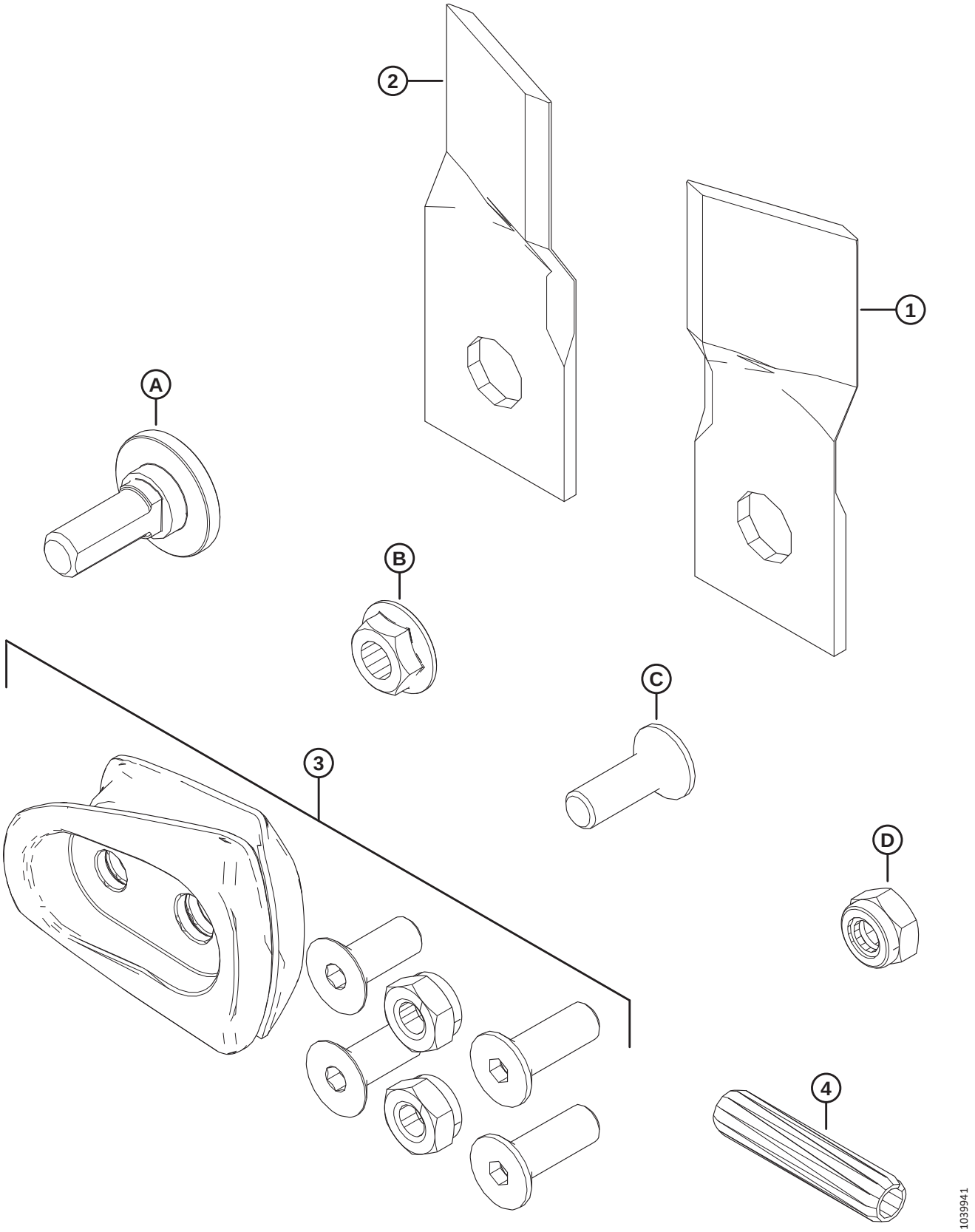

## (OPTION) R1 SERVICE KIT

| Ref | Part Number | Description | Qty | Serial Number |
|---|---|---|---|---|
| | 259053 | KIT – SERVICE R1 [181] | | |
| | | | | |
| 1 | 259199 | BLADE – CW 18° BEVEL DN QTY 6 | 4 | |
| 2 | 259200 | BLADE – CCW 18° BEVEL DN QTY 6 | 4 | |
| 3 | 238227 | KIT – 2 GUARDS C/W HARDWARE [182] | 4 | |
| 4 | 246295 | PIN – SHEAR | 2 | |
| | | | | |
| A | 281604 | BOLT – BLADE | | |
| B | 246300 | NUT – BLADE | | |
| C | 281605 | BOLT – ACCELERATOR | | |
| D | 246303 | NUT – ACCELERATOR | | |

181. This kit contains blades and hardware to service an R1 Series Rotary Disc Pull-Type.
182. This kit includes a matched pair of disc guards (NSS), two accelerator bolts (MD #281965), two accelerator nuts (MD #246303), and two accelerator bolts (MD #281605).

# 48 (Option) R116 Small Drum Kit

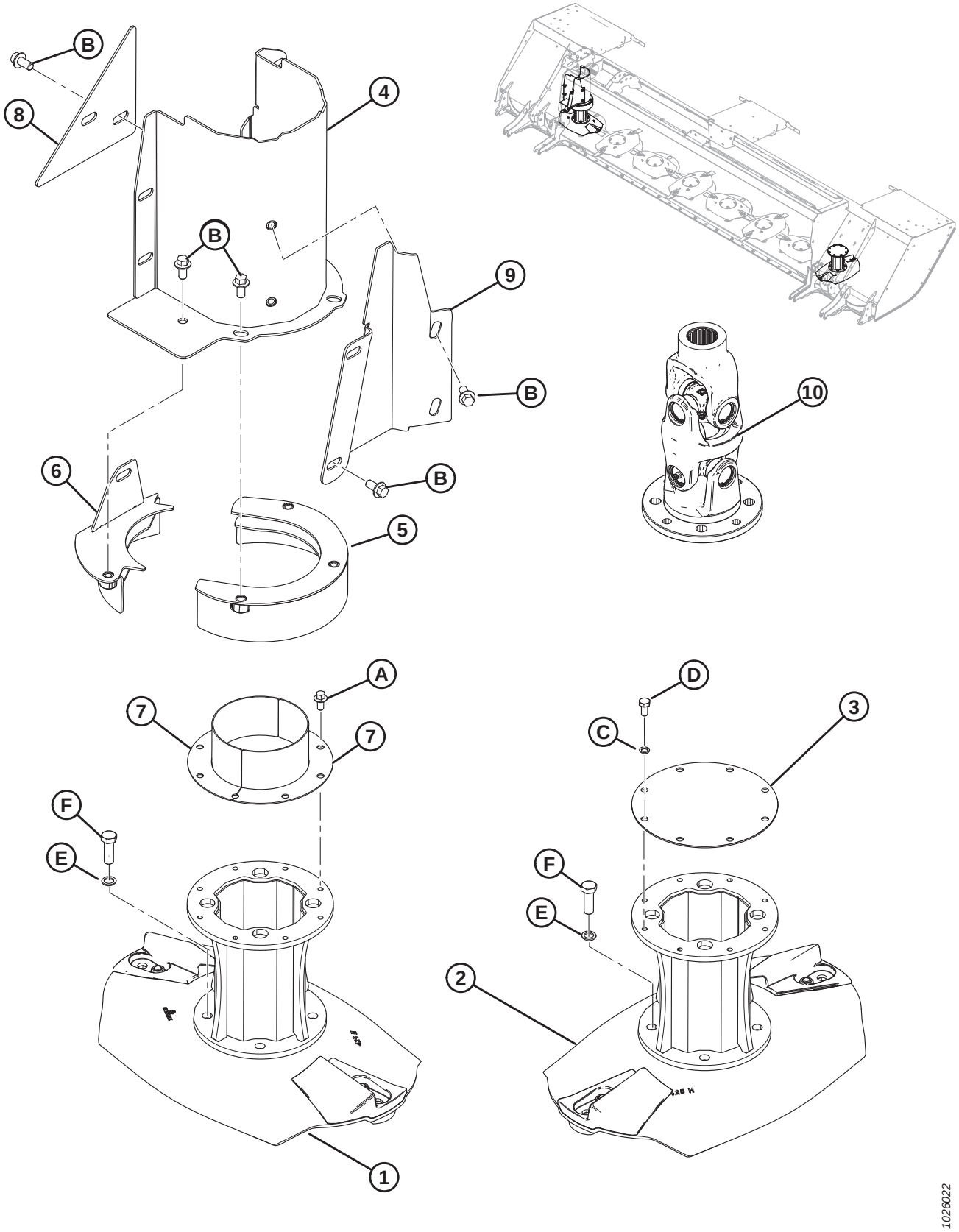

## (OPTION) R116 SMALL DRUM KIT

| Ref | Part Number | Description | Qty | Serial Number |
|---|---|---|---|---|
| | 259140 | KIT – SMALL DRUM | | |
| | | | | |
| 1 | 257085 | ASSEMBLY – CW DRUM, 425 MM DRIVE | 1 | |
| 2 | 257086 | ASSEMBLY – CCW DRUM, 425 MM | 1 | |
| 3 | 280504 | PLATE – DRUM COVER | 1 | |
| 4 | 281981 | SHIELD – VERTICAL WELD'T | 1 | |
| | 281911 | SHIELD – VERTICAL WELD'T (2015 ONLY) | 1 | 266820–285419 |
| 5 | 281489 | DRUM – TOP | 1 | |
| 6 | 281493 | PLATE WELDMENT – BACK | 1 | |
| 7 | 281497 | SHIELD WELD'T – DRUM | 2 | |
| 8 | 281500 | PLATE – COVER | 1 | |
| 9 | 281501 | PLATE – SHIELD | 1 | |
| | 299410 | PLATE – SHIELD (2015 ONLY) | 1 | 266820–285419 |
| 10 | 259139 | ASSEMBLY – DRIVELINE | 1 | |
| | 247120 | ASSEMBLY – CROSS JOURNAL CAP GREASE FITTING | 1 | |
| | 247121 | YOKE – SPLINED | 1 | |
| | 247122 | YOKE – FLANGE | 1 | |
| | | | | |
| A | 136485 | BOLT – HEX FLG HD TFL M8 X 1.25 X 16-8.8-A3L | | |
| B | 152655 | BOLT – HEX FLG HD M10 X 1.5 X 20-8.8-A3L | | |
| C | 246633 | WASHER – SPECIAL M8 | | |
| D | 246882 | BOLT – SPECIAL M8 | | |
| E | 246952 | WASHER – M12 LOCKING DISC | | |
| F | 281697 | BOLT – M12 DISC COVER | | |

# 49 (Option) Tall Crop Dividers

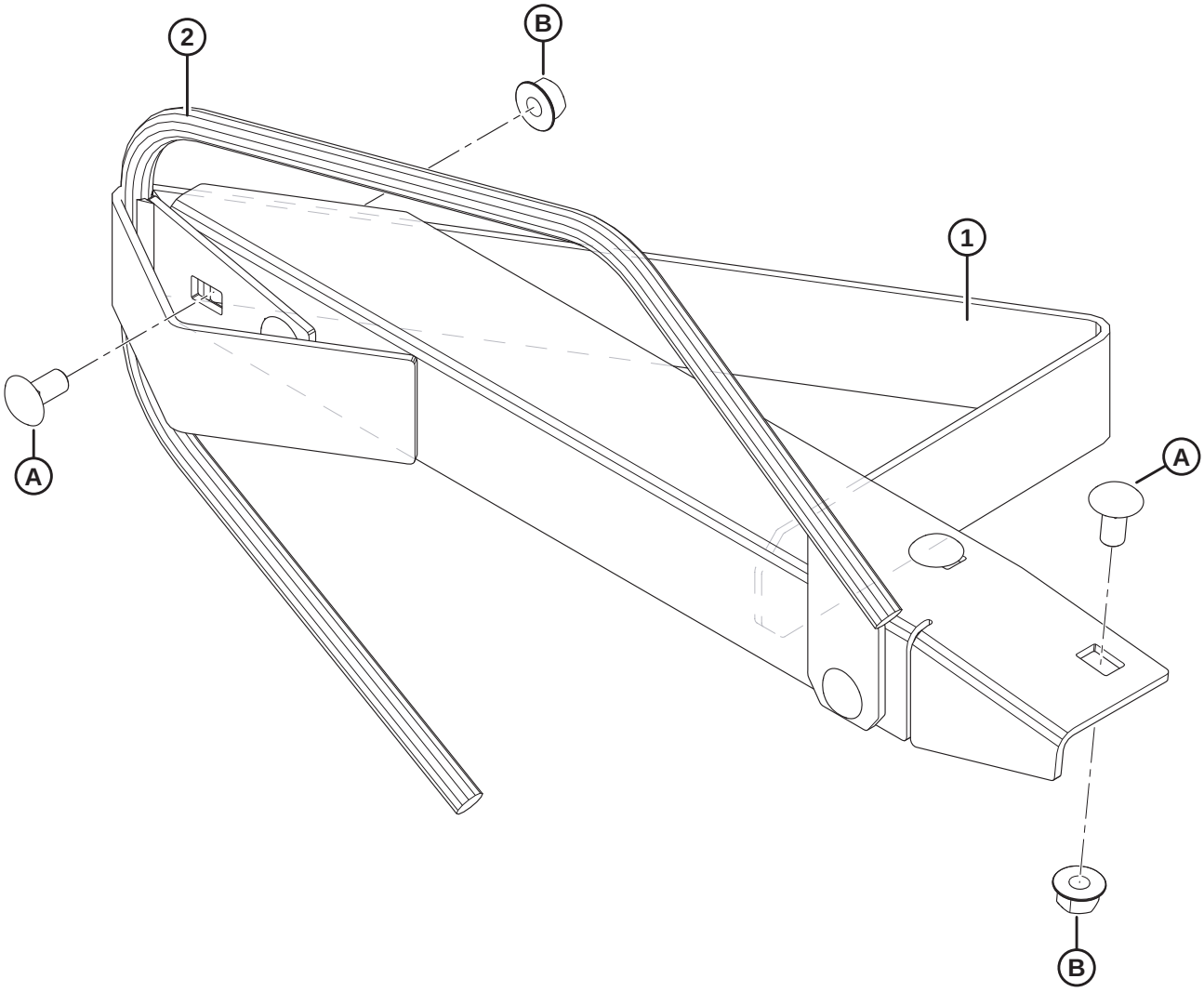


1010757

## (OPTION) TALL CROP DIVIDERS

| Ref | Part Number | Description | Qty | Serial Number |
|---|---|---|---|---|
| | B5800 | KIT – TALL CROP DIVIDERS [183] | | |
| | | | | |
| 1 | 223236 | DIVIDER WELDMENT – LH | 1 | |
| | 223248 | DIVIDER WELDMENT – RH | 1 | |
| 2 | 223232 | ROD WELDMENT – CROP DIVIDER | 2 | |
| | | | | |
| A | 152439 | BOLT – RHSSN M12 X 1.75 X 25-8.8-A3L | | |
| B | 184697 | NUT – HEX SER FLG M12 X 1.75-8-A3L | | |

183. Kits are available through Whole Goods only.

# 50 (Option) Transport – Wheel Frame

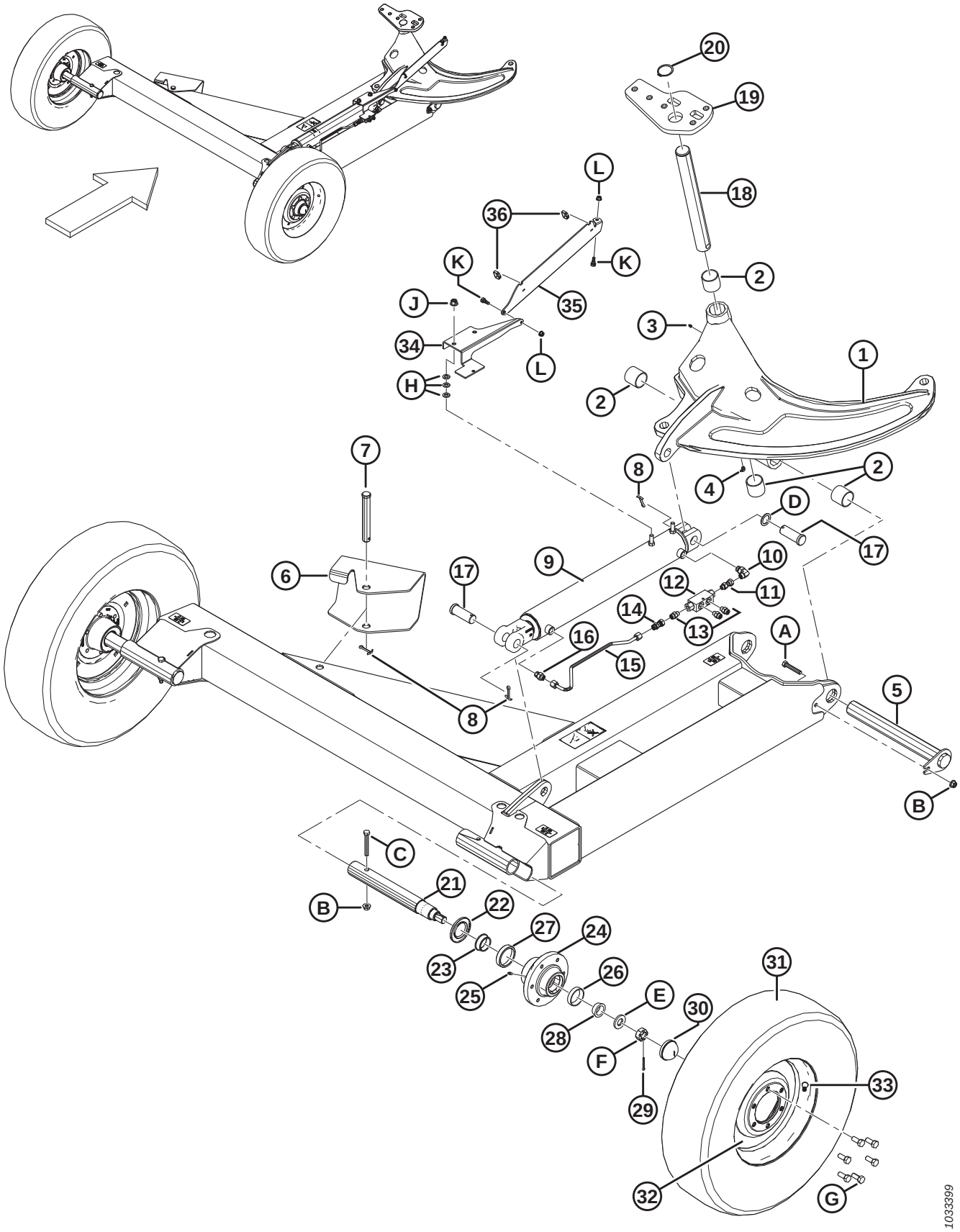

## (OPTION) TRANSPORT – WHEEL FRAME

| Ref | Part Number | Description | Qty | Serial Number |
|---|---|---|---|---|
| | B6622 | KIT – ROAD FRIENDLY TRANSPORT, PT ROTARY [184] | | |
| | | | | |
| | NSS | FRAME [185] | | |
| 1 | 247810 | ARM – REAR LINK, C/W BUSHINGS | 1 | |
| 2 | 25579 | BUSHING – STEEL | 4 | |
| 3 | 18671 | FITTING – LUBE 1/4-28 UNF | 1 | |
| 4 | 21010 | FITTING – LUBE 90° 1/4-28 TAPER THD | 1 | |
| 5 | 224106 | PIN – WELDT | 1 | |
| 6 | 246507 | BRACKET – FRONT | 1 | |
| 7 | 163921 | PIN – CLEVIS | 1 | |
| 8 | 18609 | PIN – COTTER 1/4 DIA X 2 ZP | 1 | |
| 9 | 247900 | CYLINDER – HYDRAULIC | 1 | |
| | 247181 | SEAL KIT – TRANSPORT SWING/DEPLOY CYLINDER | | |
| 10 | 136149 | FITTING – ELBOW 90° HYD C/W O-RING | 1 | |
| | 44209 | O-RING – SAE #8 | | |
| | 135865 | O-RING – #6 ORFS | | |
| 11 | 136147 | FITTING – CONNECTOR HYD | 1 | |
| | 50219 | O-RING – SAE #6 | | |
| 12 | 148851 | VALVE – PRESSURE BALANCE | 1 | |
| 13 | 135778 | FITTING – ADAPTER | 3 | |
| | 50219 | O-RING – SAE #6 | | |
| | 135865 | O-RING – #6 ORFS | | |
| 14 | 136226 | FITTING – CONNECTOR HYD, 0.062 IN. ORIFICE | 1 | |
| 15 | 223982 | LINE – HYDRAULIC | 1 | |
| 16 | 191705 | FITTING – ADAPTER 6 MORFS X 8 MORB | 1 | |
| | 44209 | O-RING – SAE #8 | | |
| | 135865 | O-RING – #6 ORFS | | |
| 17 | 281101 | PIN – CLEVIS | 2 | |
| 18 | 259086 | PIN – MACHINED (2019) [186] | 1 | |
| 19 | 259095 | PLATE – MACHINED | 1 | |
| 20 | 18899 | RING – EXTERNAL RETAINING | 1 | |
| 21 | 238193 | SPINDLE | 2 | |
| 22 | 140248 | SEAL – GREASE | 2 | |
| 23 | 140247 | BEARING – CONE ROLLER | 2 | |
| 24 | 140246 | HUB – C/W BEARING CUPS AND GREASE FITTING [187] | 2 | |
| 25 | 50174 | FITTING – LUBRICATION DRIVE TYPE | 2 | |
| 26 | 30701 | BEARING – CUP | 2 | |
| 27 | 140249 | BEARING CUP | 2 | |
| 28 | 30702 | BEARING – CONE | 2 | |

184. Kits are available through Whole Goods only.
185. Included in Rotary Disc Pull-Type Road Friendly Transport™ kit B6622.
186. Machined pins on 2018 and prior machines are serviced using MD #259258 Transport Pin Kit. Kit includes pin (MD #259086), plate (MD #259095), and retaining ring (MD #18899). Kit also includes parts to retrofit 2018 and prior R1 Series Rotary Disc Pull-Types.
187. Includes lube fitting (MD #50174), cup bearing (MD #30701), and bearing cup (MD #140249).

## (OPTION) TRANSPORT – WHEEL FRAME

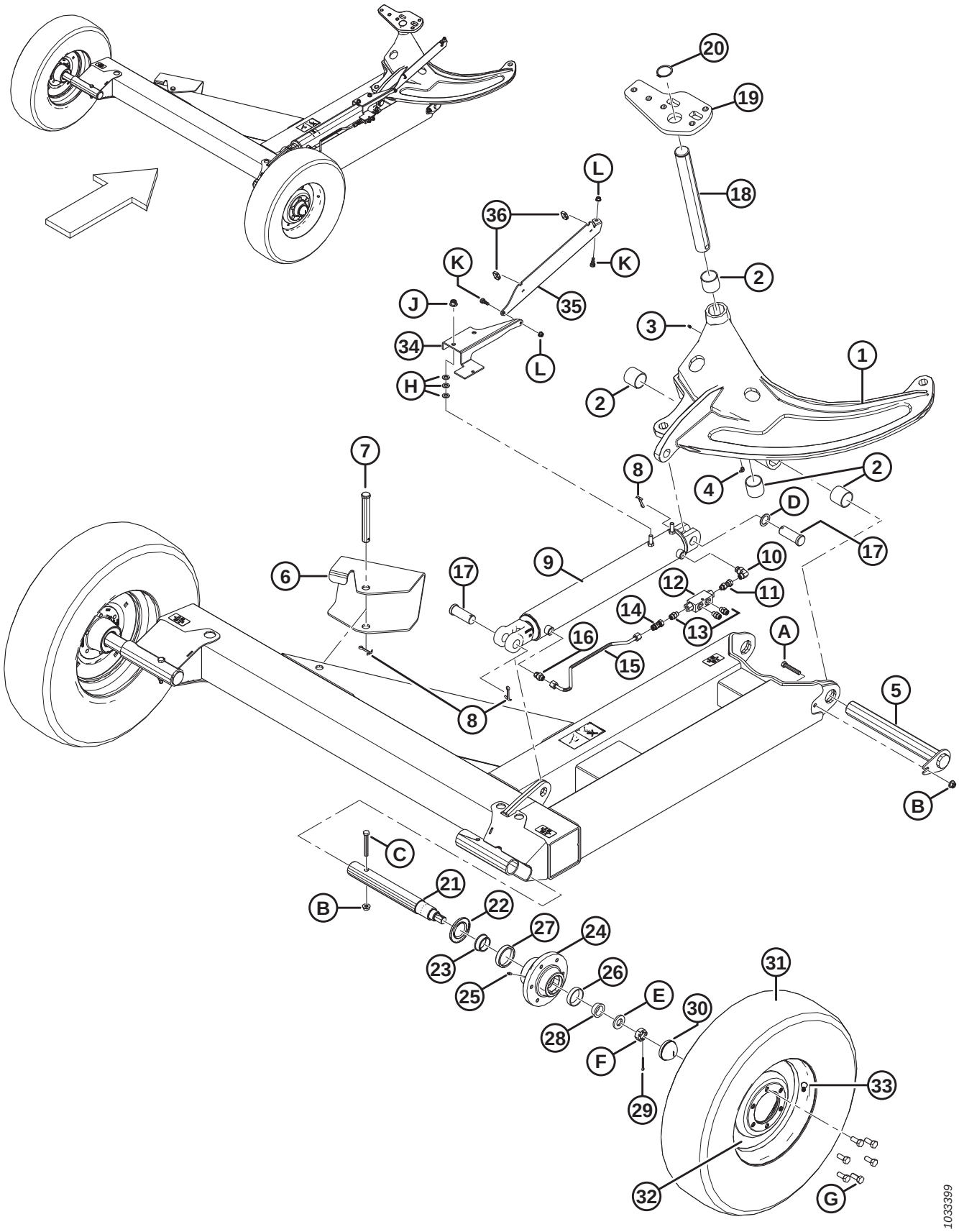

## (OPTION) TRANSPORT – WHEEL FRAME

| Ref | Part Number | Description | Qty | Serial Number |
|---|---|---|---|---|
| 29 | 18608 | PIN – COTTER 3/16 DIA X 1.5 ZP | 2 | |
| 30 | 140250 | CAP – DUST | 2 | |
| 31 | 230403 | TIRE – ST235/80R16 | 2 | |
| 32 | 224236 | WHEEL – 285-16, SILVER | 2 | |
| 33 | 21153 | STEM – TIRE VALVE ASSEMBLY #TR-415 | 2 | |
| 34 | 247726 | CHANNEL – CYLINDER | 1 | |
| 35 | 246164 | BAR – MIDDLE | 1 | |
| 36 | 30753 | FASTENER – CABLE TIE (BLACK) | 2 | |
| | | | | |
| A | 184675 | BOLT – HEX HD M12 X 1.75 X 70-8.8-A3L | | |
| B | 148645 | NUT – HEX FLG STVR LOC M12 X 1.75-10-A3L | | |
| C | 184673 | BOLT – HEX HD M12 X 1.75 X 90-10.9-A3L | | |
| D | 11460 | WASHER – FLAT | | |
| E | 31774 | WASHER – FLAT | | |
| F | 19878 | NUT – HEX SLOTTED 1.00-14UNF | | |
| G | 18916 | BOLT – 90° WHEEL 9/16 NF X 1.75 OL | | |
| H | 184714 | WASHER – FLAT REG M12-300HV-A3L | | |
| J | 136431 | NUT – HEX FLG CTR LOC M12 X 1.75-10-A3L | | |
| K | 135894 | SCREW – HEX SOC HD SHLDR 10 X 10 MM, M8 X 1.25 | | |
| L | 135337 | NUT – HEX FLG CTR LOC M8 X 1.25-8-A2L | | |

# 51 (Option) Transport – Deploy/Swing Mechanism (2015)

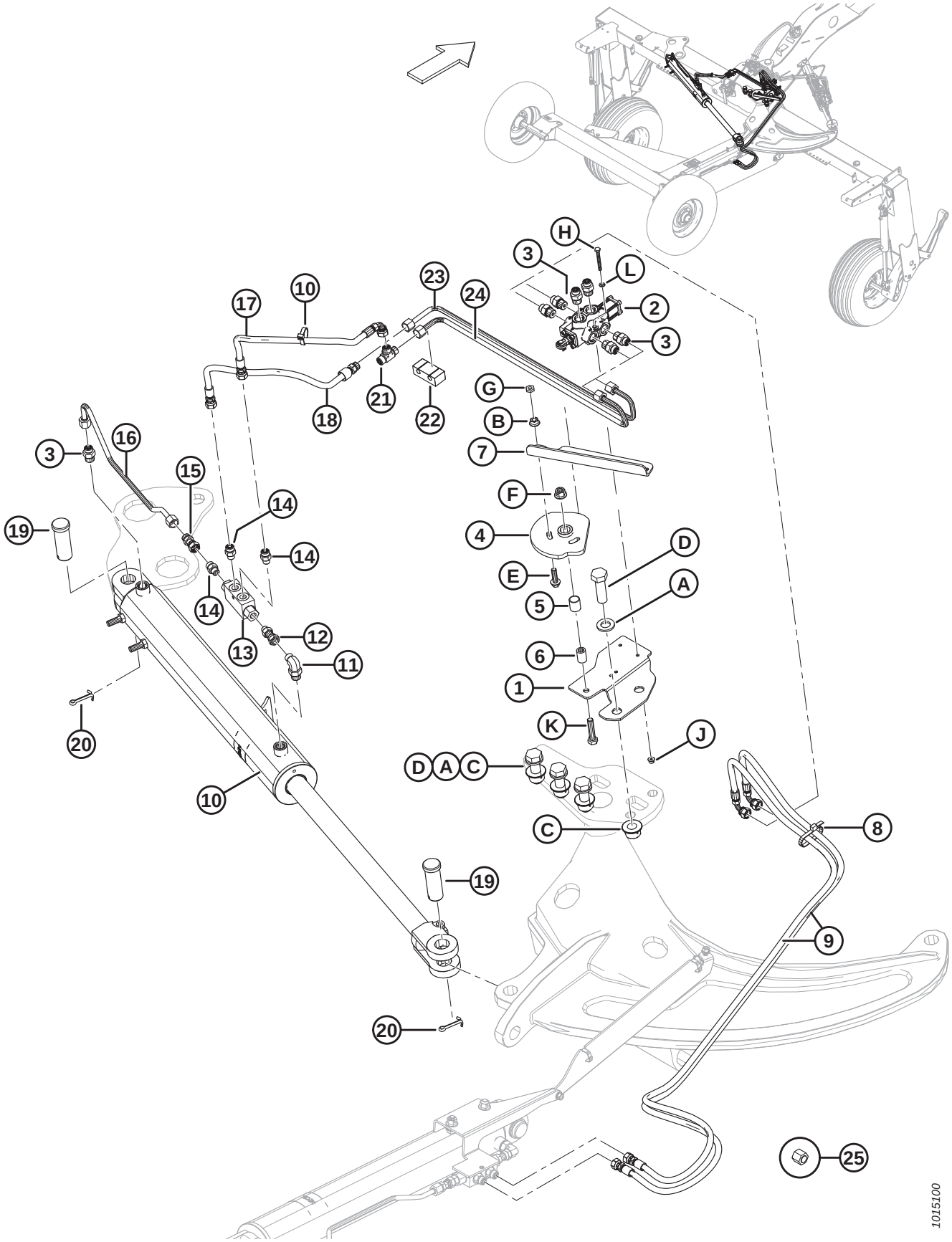

## (OPTION) TRANSPORT – DEPLOY/SWING MECHANISM (2015)

| Ref | Part Number | Description | Qty | Serial Number |
|---|---|---|---|---|
| 1 | 246454 | BRACKET – CAM MOUNT | 1 | 266820–285419 |
| 2 | 224717 | VALVE – 6 WAY 2 POSITION, CAM OPERATED | 1 | 266820–285419 |
| 3 | 191705 | FITTING – ADAPTER 6 MORFS X 8 MORB | 7 | 266820–285419 |
| | 44209 | O-RING – SAE #8 | | |
| | 135865 | O-RING – #6 ORFS | | |
| 4 | 224943 | CAM – C/W BUSHING [188] | 1 | 266820–285419 |
| | 224944 | CAM – MACHINED | 1 | |
| 5 | 156501 | BUSHING – PLASTIC | 1 | 266820–285419 |
| 6 | 224795 | TUBE – SPACER | 1 | 266820–285419 |
| 7 | 224707 | BAR – TOP | 1 | 266820–285419 |
| 8 | 30753 | FASTENER – CABLE TIE | 2 | 266820–285419 |
| 9 | 246366 | HOSE – HYD (1600 MM LG) | 2 | 266820–285419 |
| 10 | 247900 | CYLINDER – HYDRAULIC | 1 | 266820–285419 |
| | 247181 | SEAL KIT – TRANSPORT SWING/DEPLOY CYLINDER | | |
| 11 | 136149 | FITTING – ELBOW 90° HYD C/W O-RING | 1 | 266820–285419 |
| | 44209 | O-RING – SAE #8 | | |
| | 135865 | O-RING – #6 ORFS | | |
| 12 | 136147 | FITTING – CONNECTOR HYD | 1 | 266820–285419 |
| | 50219 | O-RING – SAE #6 | | |
| 13 | 148851 | VALVE – PRESSURE BALANCE | 1 | 266820–285419 |
| 14 | 135778 | FITTING – ADAPTER | 3 | 266820–285419 |
| | 50219 | O-RING – SAE #6 | | |
| | 135865 | O-RING – #6 ORFS | | |
| 15 | 136226 | FITTING – CONNECTOR HYD, 0.062 IN. ORIFICE | 1 | 266820–285419 |
| 16 | 223982 | LINE – HYDRAULIC | 1 | 266820–285419 |
| 17 | 246367 | HOSE – HYD (425 MM LG) | 1 | 266820–285419 |
| 18 | 246370 | HOSE – HYD (500 MM LG) | 1 | 266820–285419 |
| 19 | 281101 | PIN – CLEVIS | 2 | 266820–285419 |
| 20 | 18609 | PIN – COTTER 1/4 DIA X 2 ZP | 2 | 266820–285419 |
| 21 | 136098 | FITTING – TEE HYD | 1 | 266820–285419 |
| | 135865 | O-RING – #6 ORFS | | |
| 22 | 247250 | BLOCK – HOSE SUPPORT | 1 | 266820–285419 |
| 23 | 246951 | LINE – HYDRAULIC | 1 | 266820–285419 |
| 24 | 246945 | LINE – HYDRAULIC | 1 | 266820–285419 |
| 25 | 136325 | CAP – HYD SAE, 6 ORFS (SHIPPING ONLY) | A/R | 266820–285419 |
| | | | | |
| A | 112130 | WASHER – HARDENED | | |
| B | 135927 | NUT – HEX SMTH FLG M10 X 1.5-8-A3L | | |
| C | 136122 | NUT – HEX FLG CTR LOC M20 X 2.5-10-A3L | | |
| D | 136157 | BOLT – HEX HD M20 X 2.5 X 65-10.9-A3L | | |
| E | 136211 | BOLT – HEX FLG HD M10 X 1.5 X 35-8.8-A3L | | |
| F | 136431 | NUT – HEX FLG CTR LOC M12 X 1.75-10-A3L | | |
| G | 136442 | NUT – HEX THIN M10 X 1.5-05-A3L | | |

188. Includes machined cam (MD #224944) and bushing (MD #156501).

## (OPTION) TRANSPORT – DEPLOY/SWING MECHANISM (2015)

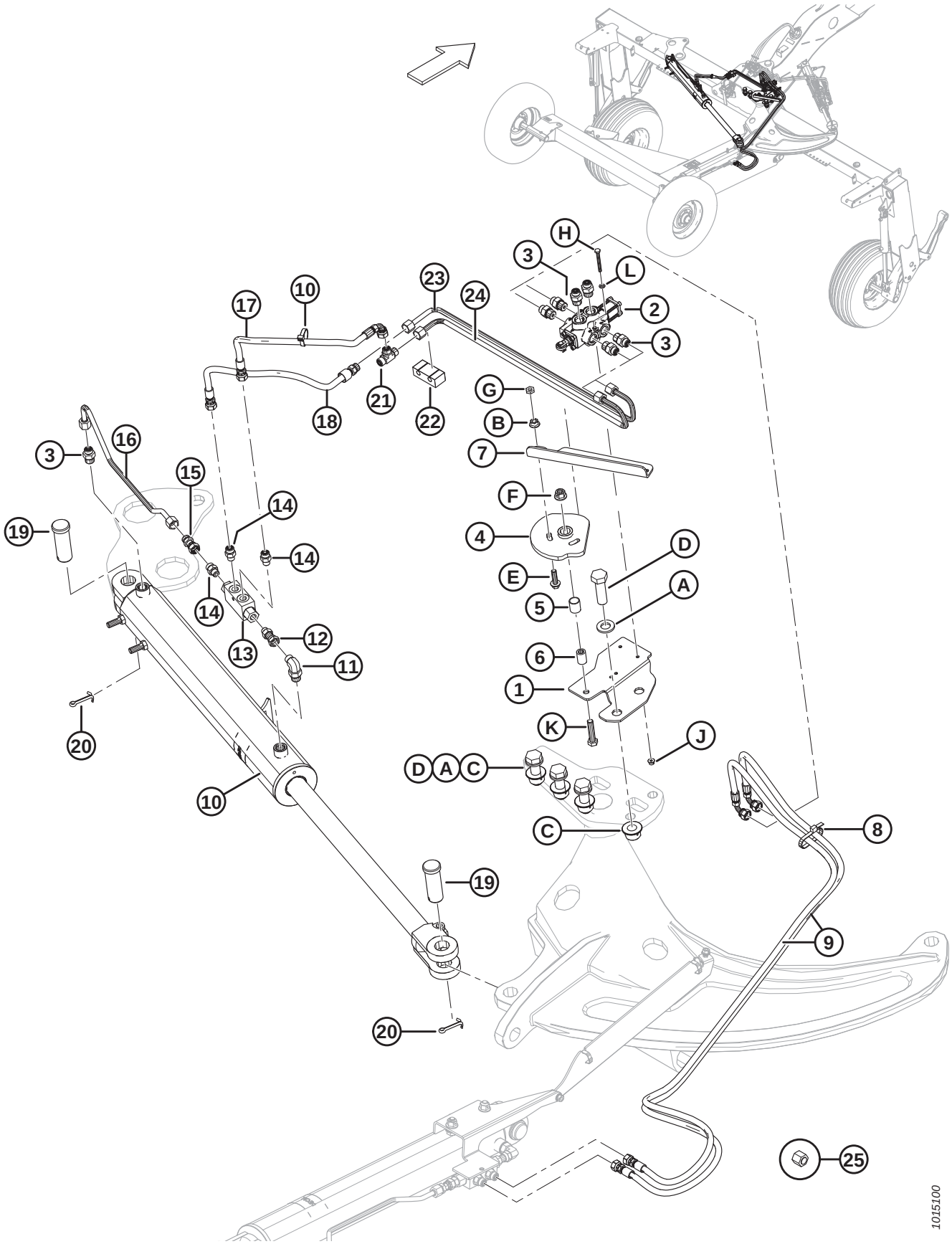

## (OPTION) TRANSPORT – DEPLOY/SWING MECHANISM (2015)

| Ref | Part Number | Description | Qty | Serial Number |
|---|---|---|---|---|
| H | 136595 | BOLT – HEX HD M6 X 1.25 X 55-8.8-A2L | | |
| J | 152668 | NUT – HEX FLG CTR LOC M6 X 1-8-A2L | | |
| K | 152779 | BOLT – HEX HD M12 X 1.75 X 55-8.8-A3L | | |
| L | 184705 | WASHER – FLAT M6-200HV-A2L | | |

# 52 (Option) Transport – Deploy/Swing Mechanism (2016–2017)

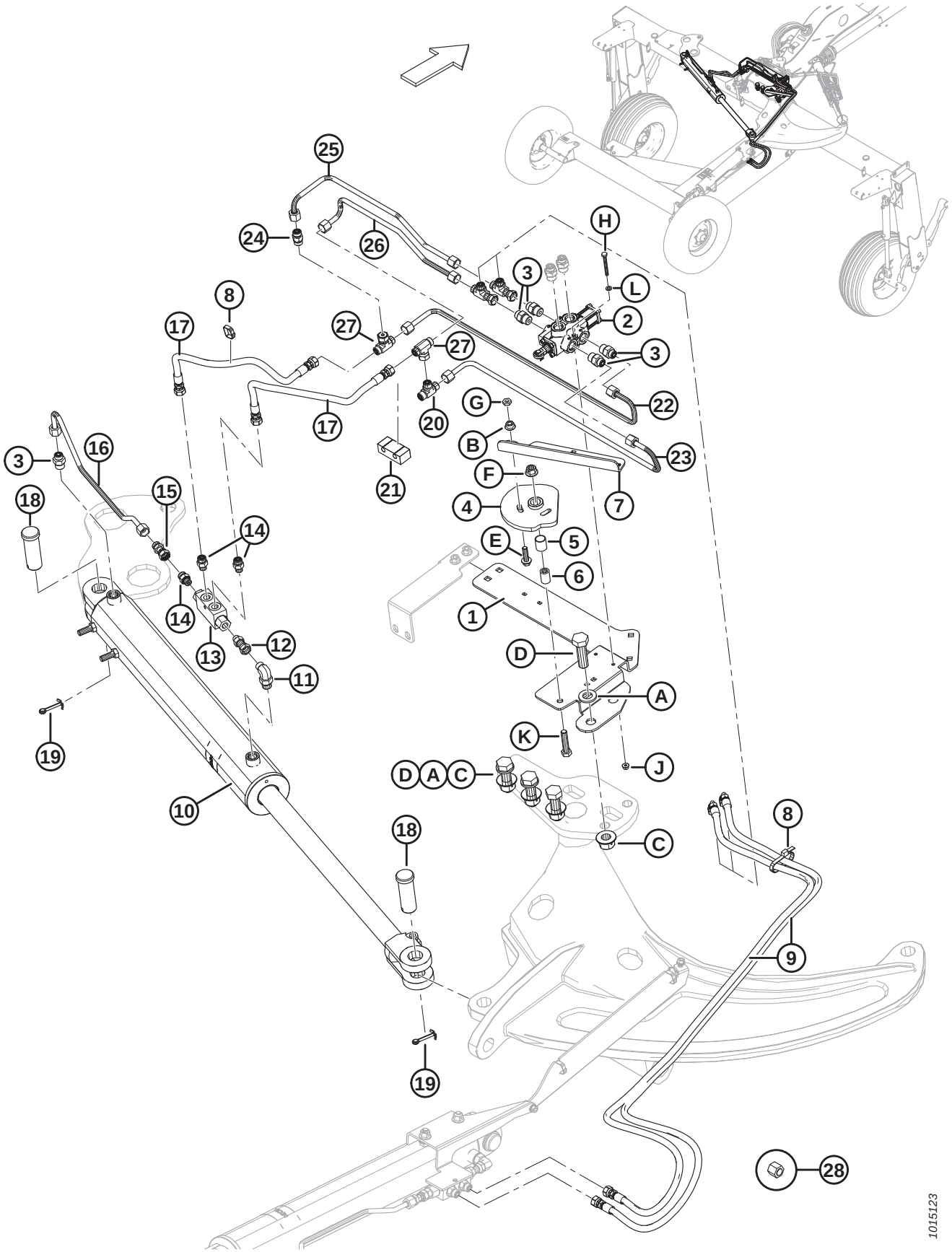

## (OPTION) TRANSPORT – DEPLOY/SWING MECHANISM (2016–2017)

| Ref | Part Number | Description | Qty | Serial Number |
|---|---|---|---|---|
| 1 | 247799 | PLATE – MOUNT | 1 | 285420–321189 |
| 2 | 224717 | VALVE – 6 WAY 2 POSITION, CAM OPERATED | 1 | 285420–321189 |
| 3 | 191705 | FITTING – ADAPTER 6 MORFS X 8 MORB | 7 | 285420–321189 |
| | 44209 | O-RING – SAE #8 | | |
| | 135865 | O-RING – #6 ORFS | | |
| 4 | 224943 | CAM – C/W BUSHING [189] | 1 | 285420–321189 |
| | 224944 | CAM – MACHINED | 1 | |
| 5 | 156501 | BUSHING – PLASTIC | 1 | 285420–321189 |
| 6 | 224795 | TUBE – SPACER | 1 | 285420–321189 |
| 7 | 224707 | BAR – TOP | 1 | 285420–321189 |
| 8 | 30753 | FASTENER – CABLE TIE | 2 | 285420–321189 |
| 9 | 246366 | HOSE – HYD (1600 MM LG) | 2 | 285420–321189 |
| 10 | 247900 | CYLINDER – HYDRAULIC | 1 | 285420–321189 |
| | 247181 | SEAL KIT – TRANSPORT SWING/DEPLOY CYLINDER | | |
| 11 | 136149 | FITTING – ELBOW 90° HYD C/W O-RING | 1 | 285420–321189 |
| | 44209 | O-RING – SAE #8 | | |
| | 135865 | O-RING – #6 ORFS | | |
| 12 | 136147 | FITTING – CONNECTOR HYD | 1 | 285420–321189 |
| | 50219 | O-RING – SAE #6 | | |
| 13 | 148851 | VALVE – PRESSURE BALANCE | 1 | 285420–321189 |
| 14 | 135778 | FITTING – ADAPTER | 3 | 285420–321189 |
| | 50219 | O-RING – SAE #6 | | |
| | 135865 | O-RING – #6 ORFS | | |
| 15 | 136226 | FITTING – CONNECTOR HYD, 0.062 IN. ORIFICE | 1 | 285420–321189 |
| 16 | 223982 | LINE – HYDRAULIC | 1 | 285420–321189 |
| 17 | 247781 | HOSE – HYD, 0.25 IN ID, 425 MM LG | 2 | 285420–321189 |
| 18 | 281101 | PIN – CLEVIS | 2 | 285420–321189 |
| 19 | 18609 | PIN – COTTER 1/4 DIA X 2 ZP | 2 | 285420–321189 |
| 20 | 136098 | FITTING – TEE HYD | 1 | 285420–321189 |
| | 135865 | O-RING – #6 ORFS | | |
| 21 | 247250 | BLOCK – HOSE SUPPORT | 1 | 285420–321189 |
| 22 | 246951 | LINE – HYDRAULIC | 1 | 285420–321189 |
| 23 | 246945 | LINE – HYDRAULIC | 1 | 285420–321189 |
| 24 | 136659 | VALVE – CHECK, ORFS #6 TO ORFS #6 | 1 | 285420–321189 |
| 25 | 247793 | LINE – HYDRAULIC, 0.375 IN DIA, BENT | 1 | 285420–321189 |
| 26 | 247794 | LINE – HYDRAULIC, 0.375 IN DIA, BENT | 1 | 285420–321189 |
| 27 | 136672 | FITTING – HYD TEE | 2 | 285420–321189 |
| 28 | 136325 | CAP – HYD SAE, 6 ORFS (SHIPPING ONLY) | A/R | 285420–321189 |
| 29 | 136097 | FITTING – TEE HYD | 2 | 285420–321189 |
| | | | | |
| A | 112130 | WASHER – HARDENED | | |
| B | 135927 | NUT – HEX SMTH FLG M10 X 1.5-8-A3L | | |
| C | 136122 | NUT – HEX FLG CTR LOC M20 X 2.5-10-A3L | | |

189. Includes machined cam (MD #224944) and bushing (MD #156501).

## (OPTION) TRANSPORT – DEPLOY/SWING MECHANISM (2016–2017)

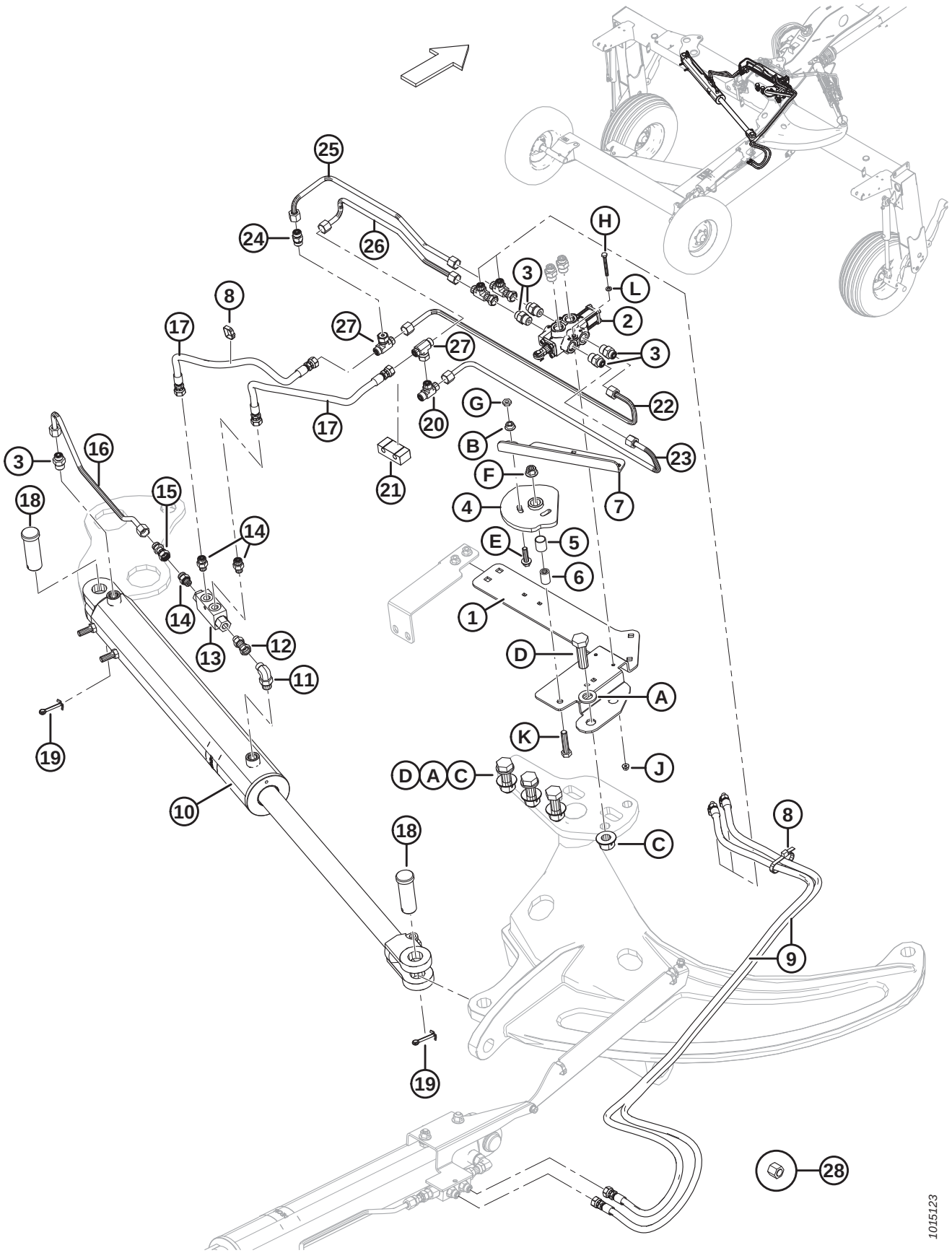

## (OPTION) TRANSPORT – DEPLOY/SWING MECHANISM (2016–2017)

| Ref | Part Number | Description | Qty | Serial Number |
|---|---|---|---|---|
| D | 136157 | BOLT – HEX HD M20 X 2.5 X 65-10.9-A3L | | |
| E | 136211 | BOLT – HEX FLG HD M10 X 1.5 X 35-8.8-A3L | | |
| F | 136431 | NUT – HEX FLG CTR LOC M12 X 1.75-10-A3L | | |
| G | 136442 | NUT – HEX THIN M10 X 1.5-05-A3L | | |
| H | 136595 | BOLT – HEX HD M6 X 1.25 X 55-8.8-A2L | | |
| J | 152668 | NUT – HEX FLG CTR LOC M6 X 1-8-A2L | | |
| K | 152779 | BOLT – HEX HD M12 X 1.75 X 55-8.8-A3L | | |
| L | 184705 | WASHER – FLAT M6-200HV-A2L | | |

# 53 (Option) Transport – Deploy/Swing Mechanism (2018 and Later)

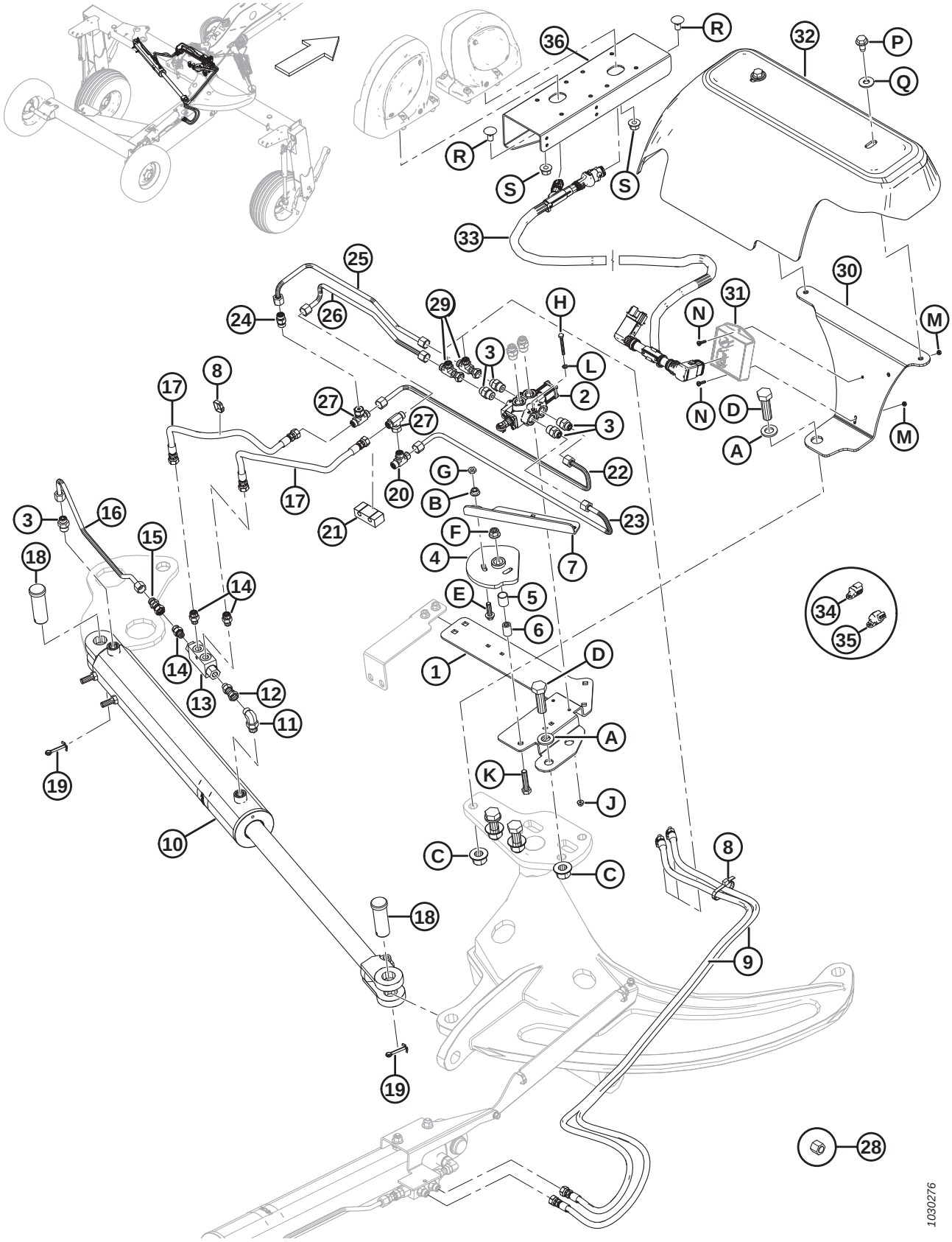

## (OPTION) TRANSPORT – DEPLOY/SWING MECHANISM (2018 AND LATER)

| Ref | Part Number | Description | Qty | Serial Number |
|---|---|---|---|---|
| 1 | 247799 | PLATE – MOUNT | 1 | 321190– |
| 2 | 224717 | VALVE – 6 WAY 2 POSITION, CAM OPERATED | 1 | 321190– |
| 3 | 191705 | FITTING – ADAPTER 6 MORFS X 8 MORB | 7 | 321190– |
| | 44209 | O-RING – SAE #8 | | |
| | 135865 | O-RING – #6 ORFS | | |
| 4 | 224943 | CAM – C/W BUSHING [190] | 1 | 321190– |
| | 224944 | CAM – MACHINED | 1 | |
| 5 | 156501 | BUSHING – PLASTIC | 1 | 321190– |
| 6 | 224795 | TUBE – SPACER | 1 | 321190– |
| 7 | 224707 | BAR – TOP | 1 | 321190– |
| 8 | 30753 | FASTENER – CABLE TIE | 2 | 321190– |
| 9 | 246366 | HOSE – HYD (1600 MM LG) | 2 | 321190– |
| 10 | 247900 | CYLINDER – HYDRAULIC | 1 | 321190– |
| | 247181 | SEAL KIT – TRANSPORT SWING/DEPLOY CYLINDER | | |
| 11 | 136149 | FITTING – ELBOW 90° HYD C/W O-RING | 1 | 321190– |
| | 44209 | O-RING – SAE #8 | | |
| | 135865 | O-RING – #6 ORFS | | |
| 12 | 136147 | FITTING – CONNECTOR HYD | 1 | 321190– |
| | 50219 | O-RING – SAE #6 | | |
| 13 | 148851 | VALVE – PRESSURE BALANCE | 1 | 321190– |
| 14 | 135778 | FITTING – ADAPTER | 3 | 321190– |
| | 50219 | O-RING – SAE #6 | | |
| | 135865 | O-RING – #6 ORFS | | |
| 15 | 136226 | FITTING – CONNECTOR HYD, 0.062 IN. ORIFICE | 1 | 321190– |
| 16 | 223982 | LINE – HYDRAULIC | 1 | 321190– |
| 17 | 247781 | HOSE – HYD, 0.25 IN ID, 425 MM LG | 2 | 321190– |
| 18 | 281101 | PIN – CLEVIS | 2 | 321190– |
| 19 | 18609 | PIN – COTTER 1/4 DIA X 2 ZP | 2 | 321190– |
| 20 | 136098 | FITTING – TEE HYD | 1 | 321190– |
| | 135865 | O-RING – #6 ORFS | | |
| 21 | 247250 | BLOCK – HOSE SUPPORT | 1 | 321190– |
| 22 | 246951 | LINE – HYDRAULIC | 1 | 321190– |
| 23 | 246945 | LINE – HYDRAULIC | 1 | 321190– |
| 24 | 136659 | VALVE – CHECK, ORFS #6 TO ORFS #6 | 1 | 321190– |
| 25 | 247793 | LINE – HYDRAULIC, 0.375 IN DIA, BENT | 1 | 321190– |
| 26 | 247794 | LINE – HYDRAULIC, 0.375 IN DIA, BENT | 1 | 321190– |
| 27 | 136672 | FITTING – HYD TEE | 2 | 321190– |
| 28 | 136325 | CAP – HYD SAE, 6 ORFS (SHIPPING ONLY) | A/R | 321190– |
| 29 | 136097 | FITTING – TEE HYD | 2 | 321190– |
| 30 | 292589 | SUPPORT – COVER | 1 | 321190– |
| 31 | REF | MODULE – TRANSPORT LIGHTING [191] | 1 | 321190– |

190. Includes machined cam (MD #224944) and bushing (MD #156501).
191. Existing lighting module (MD #281700) installed on model year 2018 and later units is used for the transport option. Refer to Section *24 Carrier Frame Components, page 73*.

## (OPTION) TRANSPORT – DEPLOY/SWING MECHANISM (2018 AND LATER)

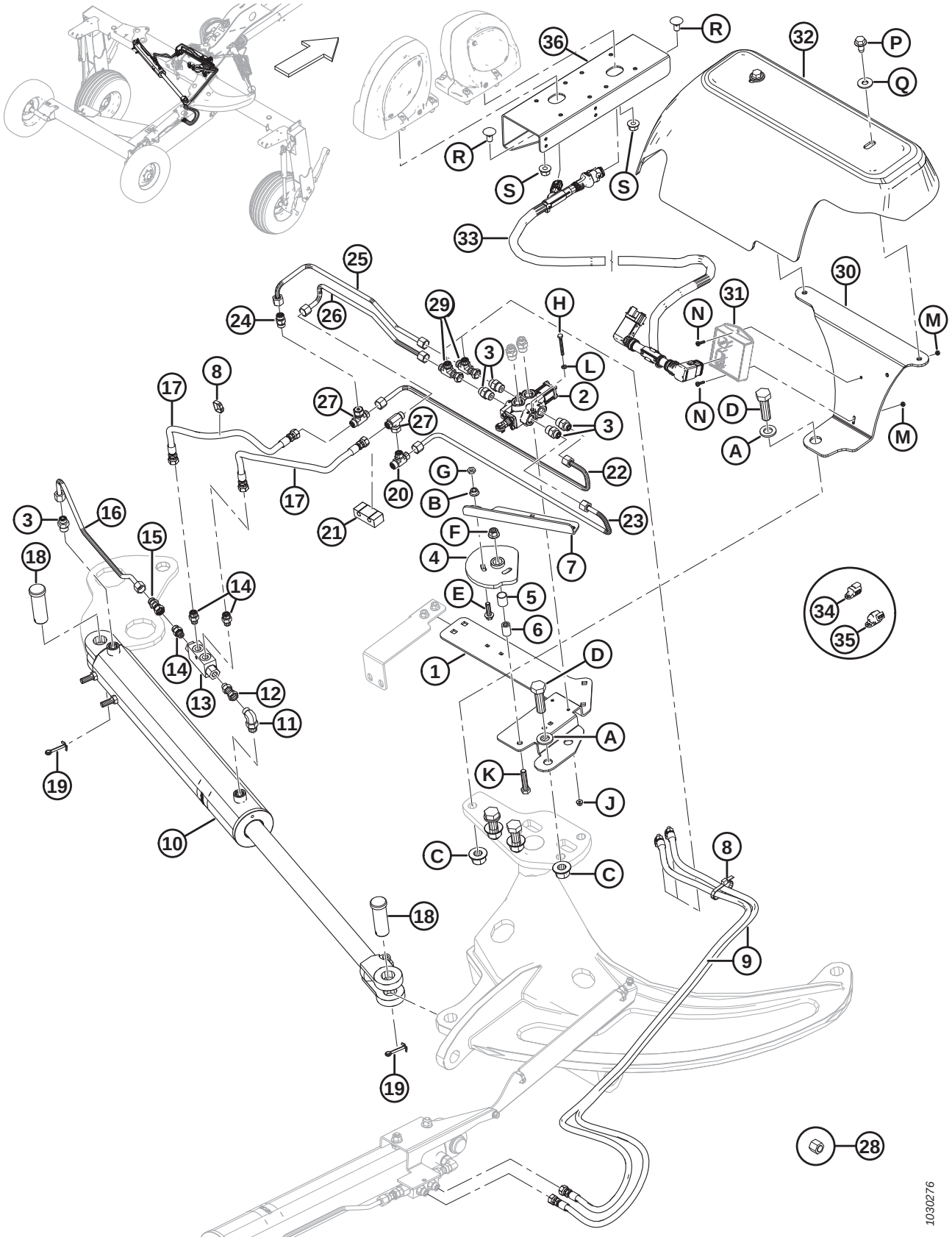

## (OPTION) TRANSPORT – DEPLOY/SWING MECHANISM (2018 AND LATER)

| Ref | Part Number | Description | Qty | Serial Number |
|---|---|---|---|---|
| 32 | 238001 | COVER – TRANSPORT | 1 | 321190– |
| 33 | 281614 | HARNESS – TRANSPORT LIGHTS | 1 | 321190– |
| 34 | 134741 | CAP – PLUG, DEUTSCH, DT, 2 POS [192] | 1 | 321190– |
| 35 | 134742 | CAP – PLUG, DEUTSCH, DT, 3 POS [192] | 1 | 321190– |
| 36 | 223185 | ASSEMBLY – SUPPORT, DUAL LAMP, LH [193] | 1 | 285420– |
| | | | | |
| A | 112130 | WASHER – HARDENED | | |
| B | 135927 | NUT – HEX SMTH FLG M10 X 1.5-8-A3L | | |
| C | 136122 | NUT – HEX FLG CTR LOC M20 X 2.5-10-A3L | | |
| D | 136157 | BOLT – HEX HD M20 X 2.5 X 65-10.9-A3L | | |
| E | 136211 | BOLT – HEX FLG HD M10 X 1.5 X 35-8.8-A3L | | |
| F | 136431 | NUT – HEX FLG CTR LOC M12 X 1.75-10-A3L | | |
| G | 136442 | NUT – HEX THIN M10 X 1.5-05-A3L | | |
| H | 136595 | BOLT – HEX HD M6 X 1.25 X 55-8.8-A2L | | |
| J | 152668 | NUT – HEX FLG CTR LOC M6 X 1-8-A2L | | |
| K | 152779 | BOLT – HEX HD M12 X 1.75 X 55-8.8-A3L | | |
| L | 184705 | WASHER – FLAT M6-200HV-A2L | | |
| M | 30855 | NUT – HEX M4 X 0.7-8-A2L | | |
| N | 136313 | SCREW – PAN HD ISO 7045 M4 X 0.7 X 16-4.8-A2L | | |
| P | 136209 | SCREW – HEX WSHR M10 X 1.5X 20-450HV | | |
| Q | 30635 | WASHER – FLAT REG M10-STL-SOFT-AA1J | | |
| R | 136178 | BOLT – RHSN M10 X 1.5 X 20-8.8-A3L | | |
| S | 50101 | NUT – HEX FLG STVR LOC M10X1.5-10-A3L | | |

192. For capping right end of existing harness (MD #281613) when transport bundle is installed.
193. Includes red reflector (MD #115147).

# 54 (Option) Transport – Alignment Mechanism (2015)

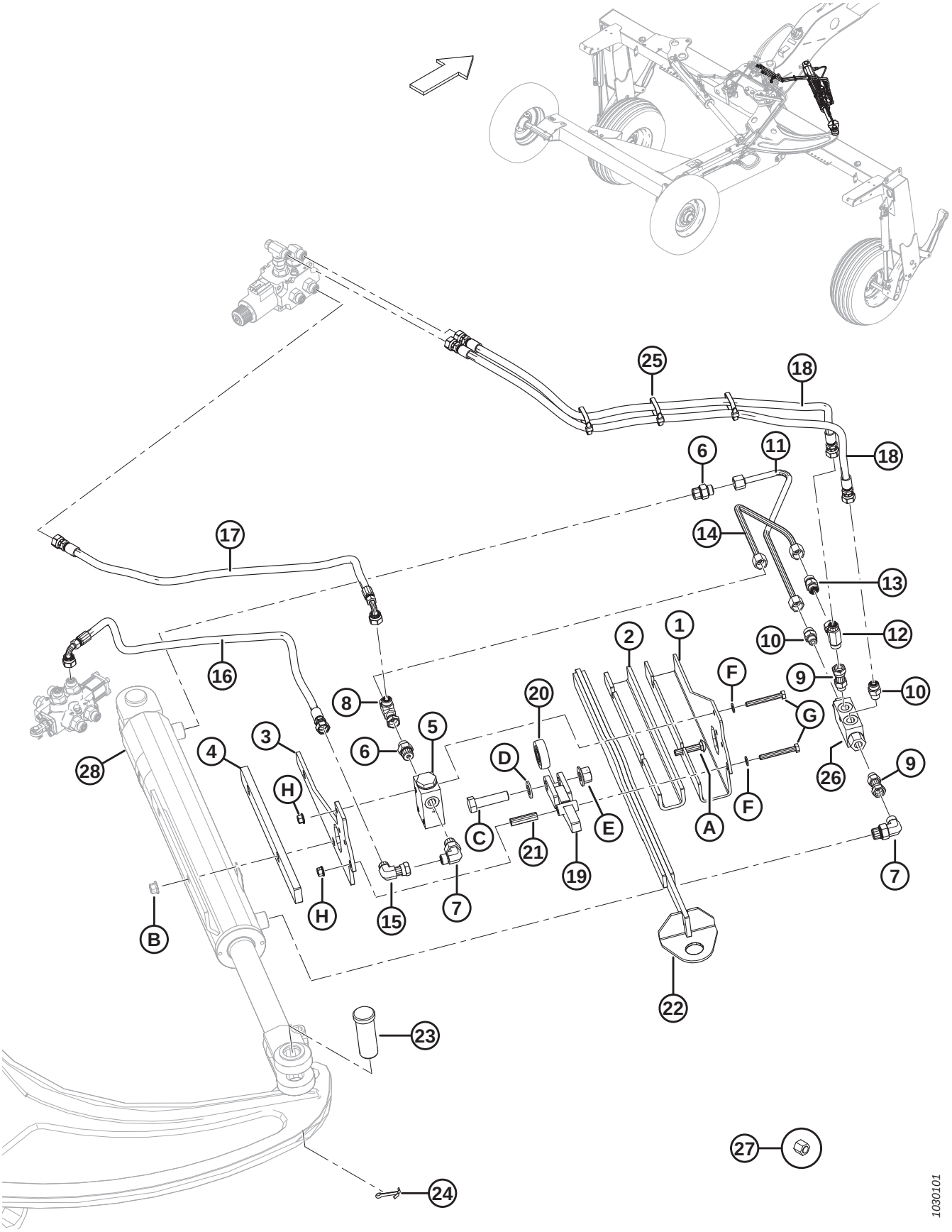

## (OPTION) TRANSPORT – ALIGNMENT MECHANISM (2015)

| Ref | Part Number | Description | Qty | Serial Number |
|---|---|---|---|---|
| 1 | 246562 | SUPPORT – CAM TRACK | 1 | 266820–285419 |
| 2 | 246322 | CHANNEL – PLASTIC | 1 | 266820–285419 |
| 3 | 246565 | SUPPORT – VALVE | 1 | 266820–285419 |
| 4 | 246587 | PLATE – SPACER (TRANSPORT ALIGN. VALVE) | 1 | 266820–285419 |
| 5 | 246267 | VALVE – HYD LIMIT SWITCH, NC, POPPET | 1 | 266820–285419 |
| 6 | 191705 | FITTING – ADAPTER 6 MORFS X 8 MORB | 2 | 266820–285419 |
| | 44209 | O-RING – SAE #8 | | |
| | 135865 | O-RING – #6 ORFS | | |
| 7 | 136149 | FITTING – ELBOW 90° HYD C/W O-RING | 2 | 266820–285419 |
| | 44209 | O-RING – SAE #8 | | |
| | 135865 | O-RING – #6 ORFS | | |
| 8 | 136097 | FITTING – TEE HYD | 1 | 266820–285419 |
| | 135865 | O-RING – #6 ORFS | | |
| 9 | 136147 | FITTING – CONNECTOR HYD | 2 | 266820–285419 |
| | 50219 | O-RING – SAE #6 | | |
| 10 | 135778 | FITTING – ADAPTER | 2 | 266820–285419 |
| | 50219 | O-RING – SAE #6 | | |
| | 135865 | O-RING – #6 ORFS | | |
| 11 | 223981 | LINE – HYDRAULIC | 1 | 266820–285419 |
| 12 | 136672 | FITTING – HYD TEE | 1 | 266820–285419 |
| | 135865 | O-RING – #6 ORFS | | |
| 13 | 136659 | VALVE – CHECK | 1 | 266820–285419 |
| | 135865 | O-RING – #6 ORFS | | |
| 14 | 246947 | LINE – HYDRAULIC | 1 | 266820–285419 |
| 15 | 136249 | FITTING – ELBOW 90° HYD | 1 | 266820–285419 |
| | 135865 | O-RING – #6 ORFS | | |
| 16 | 246626 | HOSE – HYD (600 MM LG) | 1 | 266820–285419 |
| 17 | 246720 | HOSE – HYD (950 MM LG) | 1 | 266820–285419 |
| 18 | 246371 | HOSE – HYD (950 MM LG) | 2 | 266820–285419 |
| 19 | 246576 | WELDMENT – CAM ARM | 1 | 266820–285419 |
| 20 | 50184 | BEARING – CAM FOLLOWER | 1 | 266820–285419 |
| 21 | 246444 | TUBE – SPACER | 1 | 266820–285419 |
| 22 | 246354 | ARM – CAM WELDMENT | 1 | 266820–285419 |
| 23 | 281101 | PIN – CLEVIS | 2 | 266820–285419 |
| 24 | 18609 | PIN – COTTER 1/4 DIA X 2 ZP | 2 | 266820–285419 |
| 25 | 30753 | FASTENER – CABLE TIE | 3 | 266820–285419 |
| 26 | 148851 | VALVE – PRESSURE BALANCE | 1 | 266820–285419 |
| 27 | 136325 | CAP – HYD SAE, 6 ORFS (SHIPPING ONLY) | A/R | 266820–285419 |
| 28 | REF | CYLINDER – HITCH SWING [194] | | |
| | | | | |
| A | 184658 | BOLT – RHSSN M10 X 1.5 X 50-8.8-A3L | | |
| B | 135799 | NUT – HEX FLG CTR LOC M10 X 1.5-10-A3L | | |
| C | 136141 | BOLT – HEX HD M16 X 2 X 60-8.8-A3L | | |
| D | 184717 | WASHER – FLAT REG M16-200HV-A3L | | |

194. Not included in kit. Refer to Section *28 Hitch – Hydraulic/Electrical, page 83*.

## (OPTION) TRANSPORT – ALIGNMENT MECHANISM (2015)

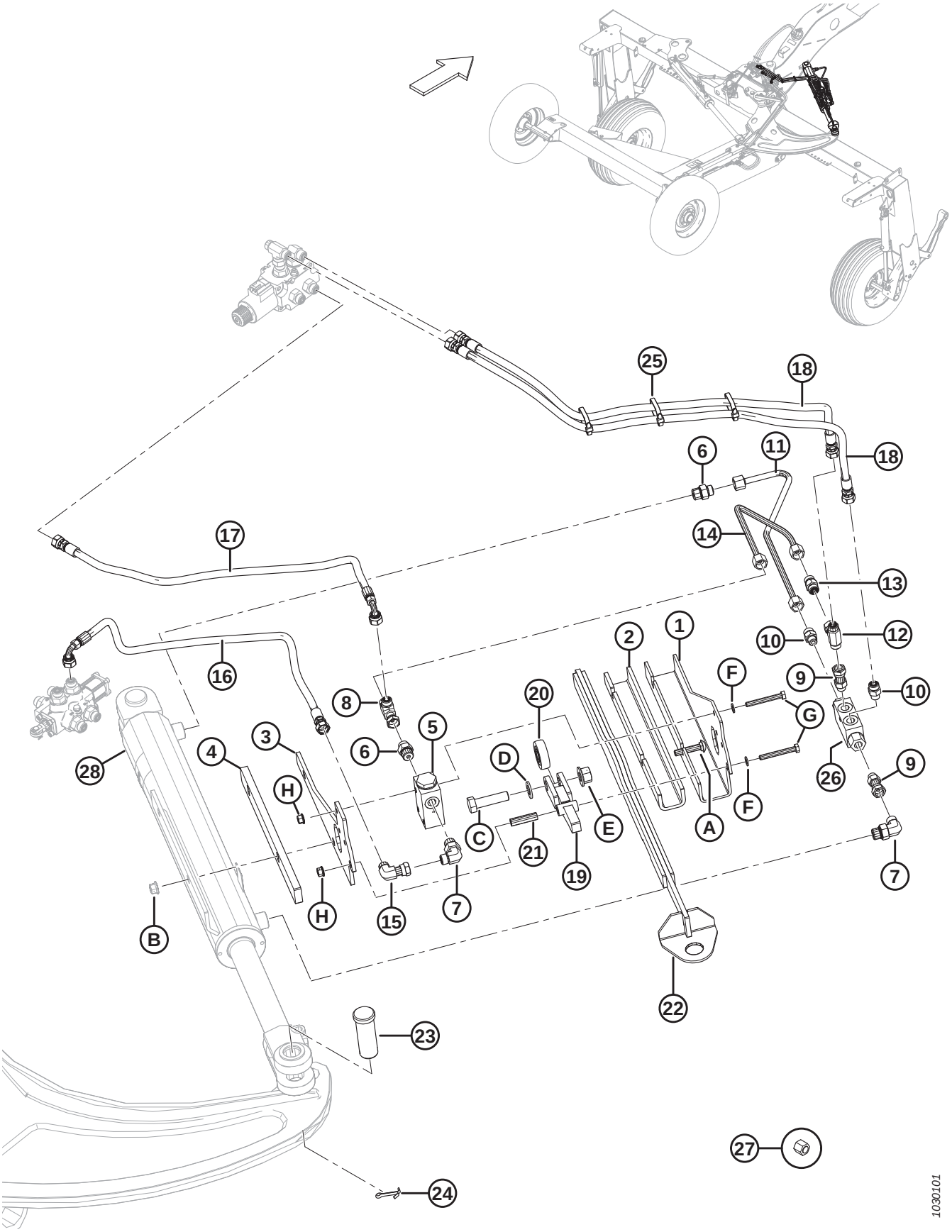

## (OPTION) TRANSPORT – ALIGNMENT MECHANISM (2015)

| Ref | Part Number | Description | Qty | Serial Number |
|---|---|---|---|---|
| E | 136440 | NUT – HEX FLG CTR LOC M16 X 2-10-A3L | | |
| F | 184708 | WASHER – FLAT M8-200HV-A2L | | |
| G | 152775 | BOLT – HEX HD M8 X 1.25 X 65-8.8-A2L | | |
| H | 135337 | NUT – HEX FLG CTR LOC M8 X 1.25-8-A2L | | |

# 55 (Option) Transport – Alignment Mechanism (2016 and Later)

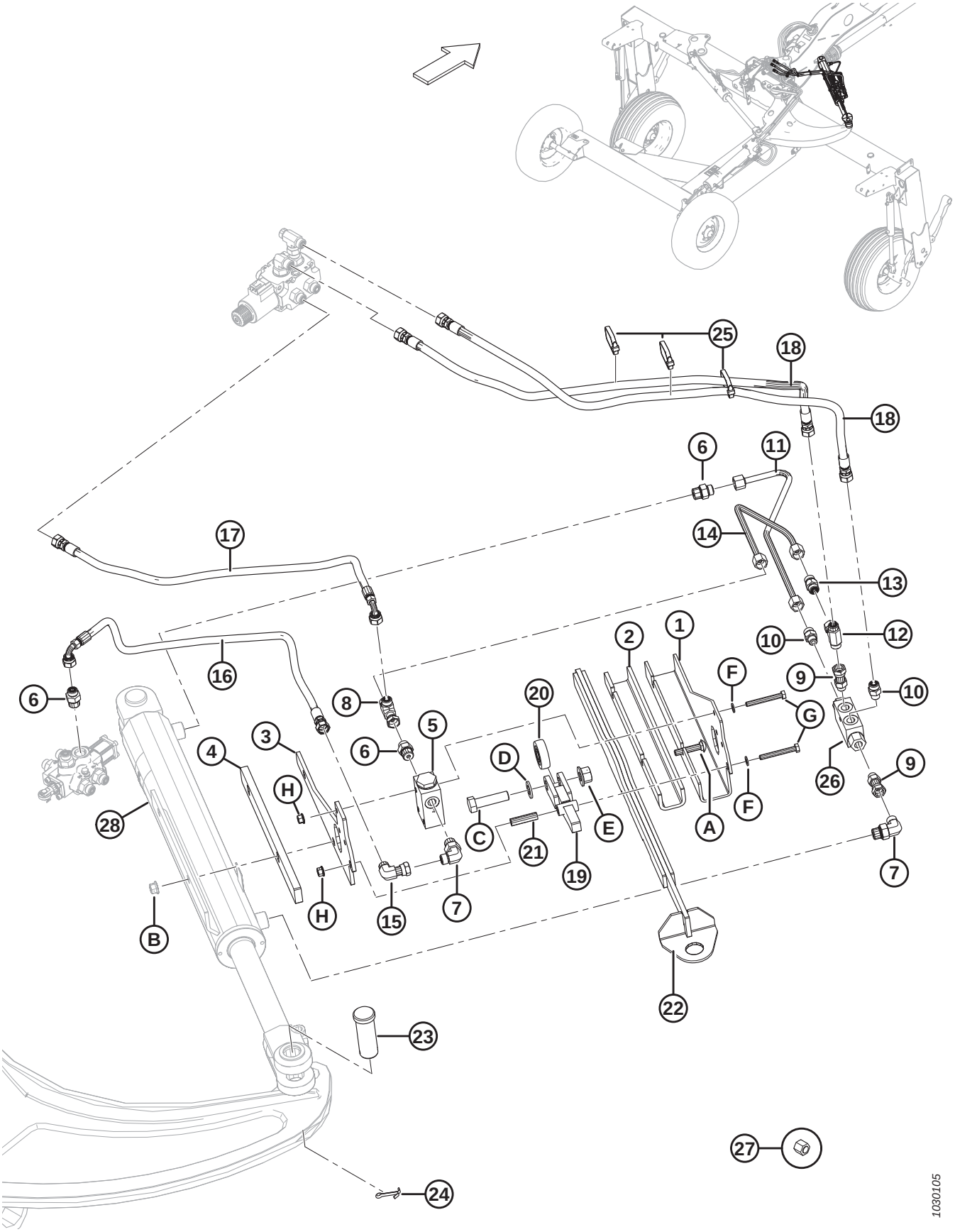

## (OPTION) TRANSPORT – ALIGNMENT MECHANISM (2016 AND LATER)

| Ref | Part Number | Description | Qty | Serial Number |
|---|---|---|---|---|
| 1 | 246562 | SUPPORT – CAM TRACK | 1 | 285420– |
| 2 | 246322 | CHANNEL – PLASTIC | 1 | 285420– |
| 3 | 246565 | SUPPORT – VALVE | 1 | 285420– |
| 4 | 246587 | PLATE – SPACER (TRANSPORT ALIGN. VALVE) | 1 | 285420– |
| 5 | 246267 | VALVE – HYD LIMIT SWITCH, NC, POPPET | 1 | 285420– |
| 6 | 191705 | FITTING – ADAPTER 6 MORFS X 8 MORB | 2 | 285420– |
| | 44209 | O-RING – SAE #8 | | |
| | 135865 | O-RING – #6 ORFS | | |
| 7 | 136149 | FITTING – ELBOW 90° HYD C/W O-RING | 2 | 285420– |
| | 44209 | O-RING – SAE #8 | | |
| | 135865 | O-RING – #6 ORFS | | |
| 8 | 136097 | FITTING – TEE HYD | 1 | 285420– |
| | 135865 | O-RING – #6 ORFS | | |
| 9 | 136147 | FITTING – CONNECTOR HYD | 2 | 285420– |
| | 50219 | O-RING – SAE #6 | | |
| 10 | 135778 | FITTING – ADAPTER | 2 | 285420– |
| | 50219 | O-RING – SAE #6 | | |
| | 135865 | O-RING – #6 ORFS | | |
| 11 | 223981 | LINE – HYDRAULIC | 1 | 285420– |
| 12 | 136672 | FITTING – HYD TEE | 1 | 285420– |
| | 135865 | O-RING – #6 ORFS | | |
| 13 | 136659 | VALVE – CHECK | 1 | 285420– |
| | 135865 | O-RING – #6 ORFS | | |
| 14 | 246947 | LINE – HYDRAULIC | 1 | 285420– |
| 15 | 136249 | FITTING – ELBOW 90° HYD | 1 | 285420– |
| | 135865 | O-RING – #6 ORFS | | |
| 16 | 259107 | HOSE – HYD, 0.25 IN ID, 1150 MM LG | 1 | 285420– |
| 17 | 246720 | HOSE – HYD, 0.25 IN ID, 950 MM LG | 1 | 285420– |
| 18 | 247628 | HOSE – HYD, 0.25 IN ID, 850 MM LG | 2 | 285420– |
| 19 | 246576 | WELDMENT – CAM ARM | 1 | 285420– |
| 20 | 50184 | BEARING – CAM FOLLOWER | 1 | 285420– |
| 21 | 246444 | TUBE – SPACER | 1 | 285420– |
| 22 | 246354 | ARM – CAM WELDMENT | 1 | 285420– |
| 23 | 281101 | PIN – CLEVIS | 2 | 285420– |
| 24 | 18609 | PIN – COTTER 1/4 DIA X 2 ZP | 2 | 285420– |
| 25 | 30753 | FASTENER – CABLE TIE | 3 | 285420– |
| 26 | 148851 | VALVE – PRESSURE BALANCE | 1 | 285420– |
| 27 | 136325 | CAP – HYD SAE, 6 ORFS (SHIPPING ONLY) | A/R | 285420– |
| 28 | REF | CYLINDER – HITCH SWING [195] | | |
| | | | | |
| A | 184658 | BOLT – RHSSN M10 X 1.5 X 50-8.8-A3L | | |
| B | 135799 | NUT – HEX FLG CTR LOC M10 X 1.5-10-A3L | | |
| C | 136141 | BOLT – HEX HD M16 X 2 X 60-8.8-A3L | | |
| D | 184717 | WASHER – FLAT REG M16-200HV-A3L | | |

195. Not included in kit. Refer to Section *28 Hitch – Hydraulic/Electrical, page 83*.

## (OPTION) TRANSPORT – ALIGNMENT MECHANISM (2016 AND LATER)

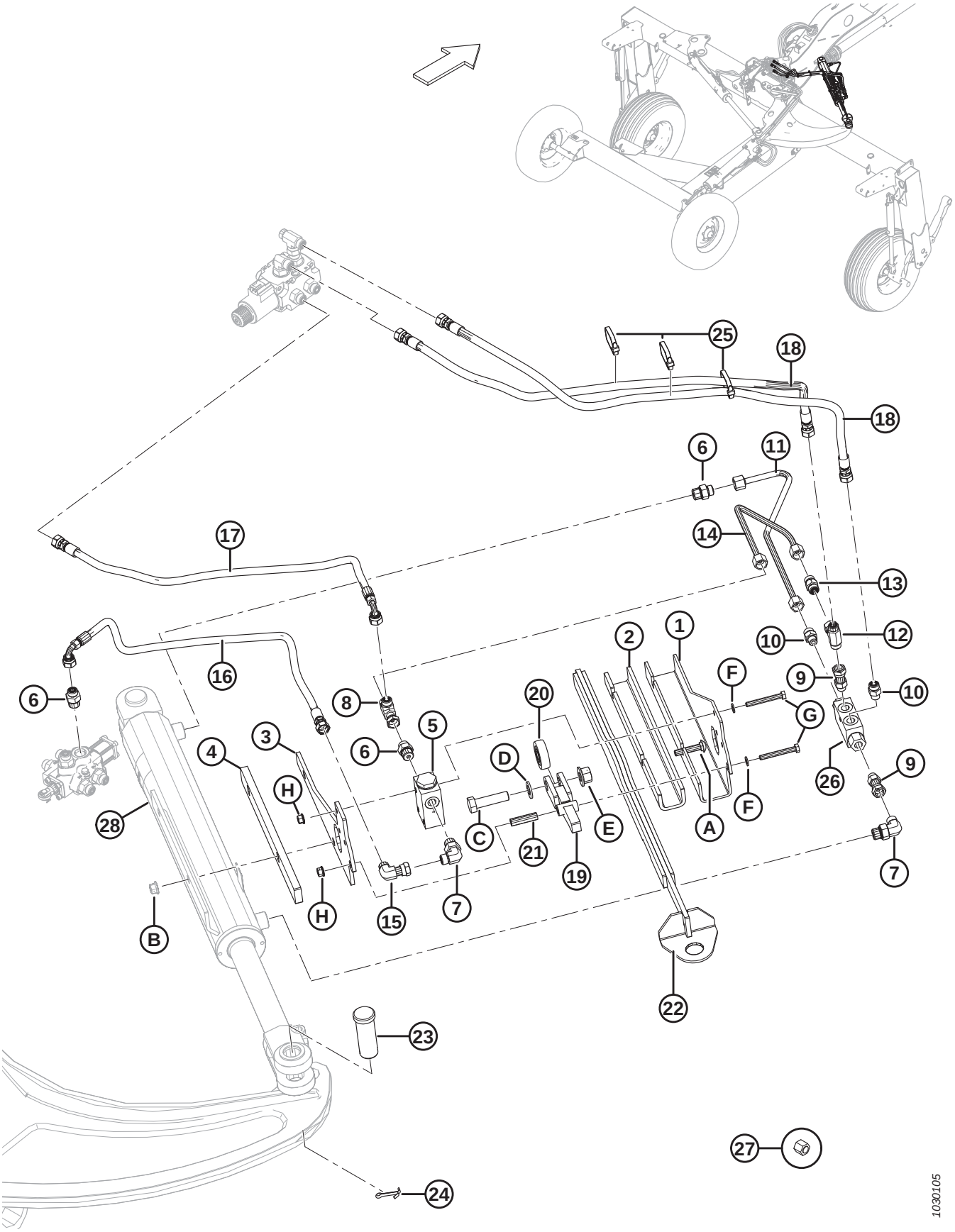

## (OPTION) TRANSPORT – ALIGNMENT MECHANISM (2016 AND LATER)

| Ref | Part Number | Description | Qty | Serial Number |
|---|---|---|---|---|
| E | 136440 | NUT – HEX FLG CTR LOC M16 X 2-10-A3L | | |
| F | 184708 | WASHER – FLAT M8-200HV-A2L | | |
| G | 152775 | BOLT – HEX HD M8 X 1.25 X 65-8.8-A2L | | |
| H | 135337 | NUT – HEX FLG CTR LOC M8 X 1.25-8-A2L | | |

# 56 (Option) Transport – Swing Completion / Selector Valve (2015)

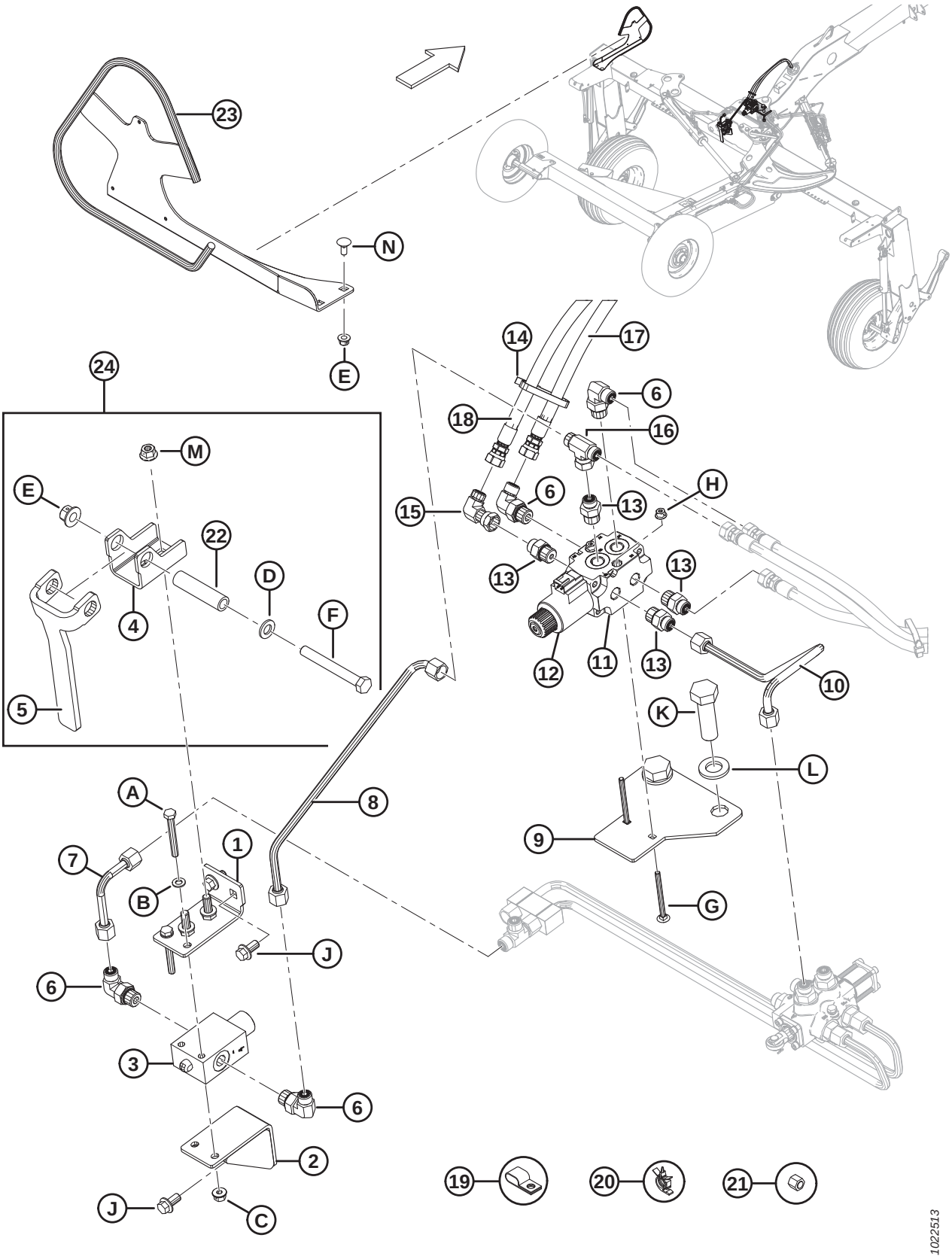

## (OPTION) TRANSPORT – SWING COMPLETION / SELECTOR VALVE (2015)

| Ref | Part Number | Description | Qty | Serial Number |
|---|---|---|---|---|
| 1 | 246277 | WELDMENT – VALVE SWITCH SUPPORT, TOP | 1 | 266820–285419 |
| 2 | 246500 | WELDMENT – VALVE SWITCH SUPPORT, BOTTOM | 1 | 266820–285419 |
| 3 | 246269 | VALVE – LIMIT SWITCH, NC, SPOOL | 1 | 266820–285419 |
| 4 | 247597 | BRACKET – PIVOT | 1 | 266820–285419 |
| 5 | 247598 | ARM – SWITCH LEVER | 1 | 266820–285419 |
| 6 | 136149 | FITTING – ELBOW 90° HYD C/W O-RING | 4 | 266820–285419 |
| | 44209 | O-RING – SAE #8 | | |
| | 135865 | O-RING – #6 ORFS | | |
| 7 | 246954 | LINE – HYDRAULIC | 1 | 266820–285419 |
| 8 | 247335 | LINE – HYDRAULIC | 1 | 266820–285419 |
| 9 | 246609 | PLATE – MOUNT | 1 | 266820–285419 |
| 10 | 247336 | LINE – HYDRAULIC | 1 | 266820–285419 |
| 11 | 246524 | VALVE – 6 WAY 2 POSITION, SOLENOID OPERATED | 1 | 266820–285419 |
| | 247033 | COIL – SOLENOID | 1 | 266820–285419 |
| 12 | 139130 | VALVE – SOLENOID | 1 | 266820–285419 |
| | 163162 | SEAL KIT | | |
| 13 | 191705 | FITTING – ADAPTER 6 MORFS X 8 MORB | 4 | 266820–285419 |
| | 44209 | O-RING – SAE #8 | | |
| | 135865 | O-RING – #6 ORFS | | |
| 14 | 30753 | FASTENER – CABLE TIE | 4 | 266820–285419 |
| 15 | 136249 | FITTING – ELBOW 90° HYDRAULIC | 1 | 266820–285419 |
| | 135865 | O-RING – #6 ORFS | | |
| 16 | 136672 | FITTING – HYDRAULIC TEE | 1 | 266820–285419 |
| | 135865 | O-RING – #6 ORFS | | |
| 17 | 224162 | HOSE – HYDRAULIC (9335 MM LG) | 1 | 266820–285419 |
| 18 | 224163 | HOSE – HYDRAULIC (9335 MM LG) | 1 | 266820–285419 |
| 19 | 135233 | CLAMP – DOUBLE HOSE INSULATED | 3 | 266820–285419 |
| 20 | 184301 | CLAMP | 2 | 266820–285419 |
| 21 | 136325 | CAP – HYD SAE, 6 ORFS (SHIPPING ONLY) | A/R | 266820–285419 |
| 22 | 247596 | TUBE – SPACER, 0.5 IN ID, 0.75 IN OD | 1 | 266820–285419 |
| 23 | 247675 | GUARD – WELDMENT, SUPPORT-SMV | 1 | 266820–285419 |
| 24 | 247625 | ASSY – TRANS. COMPLETE PADDLE | 1 | 266820–285419 |
| | | | | |
| A | 152775 | BOLT – HEX HD M8 X 1.25 X 65-8.8-A2L | | |
| B | 184708 | WASHER – FLAT M8-200HV-A2L | | |
| C | 135337 | NUT – HEX FLG CTR LOC M8 X 1.25-8-A2L | | |
| D | 184714 | WASHER – FLAT REG M12-300HV-A3L | | |
| E | 136431 | NUT – HEX FLG CTR LOC M12 X 1.75-10-A3L | | |
| F | 184672 | BOLT – HEX HD M12 X 1.75 X 100-10.9-A3L | | |
| G | 136788 | BOLT – RHSN M6 X 1 X 75-8.8-A2L | | |
| H | 152668 | NUT – HEX FLG CTR LOC M6 X 1-8-A2L | | |
| J | 136399 | BOLT – HEX FLG HD TFL M12 X 1.75 X 25-8.8-A3L | | |
| K | 136157 | BOLT – HEX HD M20 X 2.5 X 65-10.9-A3L | | |
| L | 112130 | WASHER – HARDENED | | |
| M | 50101 | NUT – HEX FLG STVR LOC M10 X 1.5-10-A3L | | |
| N | 184667 | BOLT – RHSN M12 X 1.75 X 30-8.8-A3L | | |

# 57 (Option) Transport – Swing Completion / Selector Valve (2016–2018)

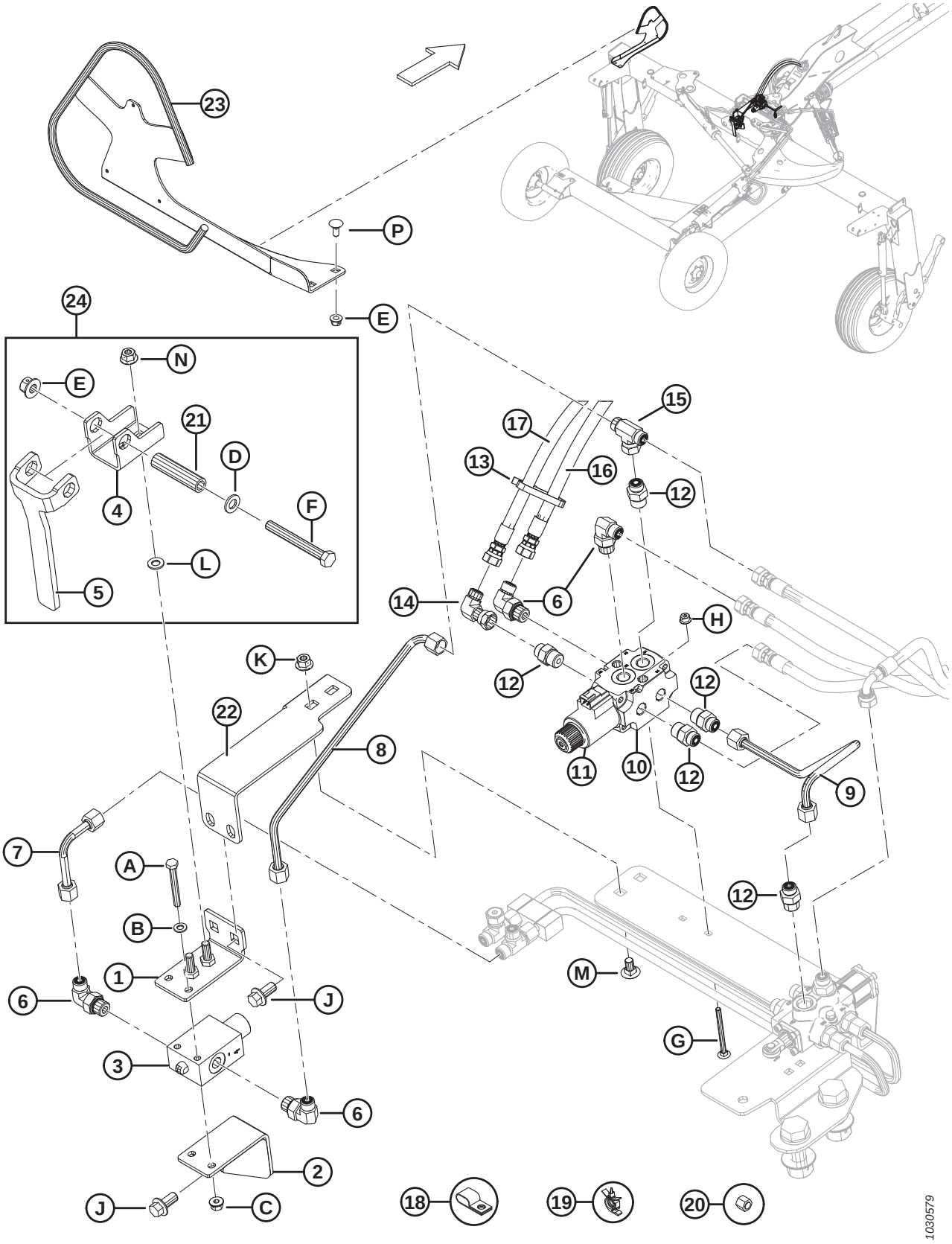

## (OPTION) TRANSPORT – SWING COMPLETION / SELECTOR VALVE (2016–2018)

| Ref | Part Number | Description | Qty | Serial Number |
|---|---|---|---|---|
| 1 | 246277 | WELDMENT – VALVE SWITCH SUPPORT, TOP | 1 | 285420–346189 |
| 2 | 246500 | WELDMENT – VALVE SWITCH SUPPORT, BOTTOM | 1 | 285420–346189 |
| 3 | 246269 | VALVE – LIMIT SWITCH, NC, SPOOL | 1 | 285420–346189 |
| 4 | 247597 | BRACKET – PIVOT | 1 | 285420–346189 |
| 5 | 247598 | ARM – SWITCH LEVER | 1 | 285420–346189 |
| 6 | 136149 | FITTING – ELBOW 90° HYD C/W O-RING | 4 | 285420–346189 |
| | 44209 | O-RING – SAE #8 | | |
| | 135865 | O-RING – #6 ORFS | | |
| 7 | 246954 | LINE – HYDRAULIC | 1 | 285420–346189 |
| 8 | 247335 | LINE – HYDRAULIC | 1 | 285420–346189 |
| 9 | 247336 | LINE – HYDRAULIC | 1 | 285420–346189 |
| 10 | 246524 | VALVE – 6 WAY 2 POSITION, SOLENOID OPERATED | 1 | 285420–346189 |
| 11 | 247033 | COIL – SOLENOID | 1 | 285420–346189 |
| 12 | 191705 | FITTING – ADAPTER 6 MORFS X 8 MORB | 4 | 285420–346189 |
| | 44209 | O-RING – SAE #8 | | |
| | 135865 | O-RING – #6 ORFS | | |
| 13 | 30753 | FASTENER – CABLE TIE | 4 | 285420–346189 |
| 14 | 136249 | FITTING – ELBOW 90° HYDRAULIC | 1 | 285420–346189 |
| | 135865 | O-RING – #6 ORFS | | |
| 15 | 136672 | FITTING – HYDRAULIC TEE | 1 | 285420–346189 |
| | 135865 | O-RING – #6 ORFS | | |
| 16 | 224162 | HOSE – HYDRAULIC (9335 MM LG) | 1 | 285420–346189 |
| 17 | 224163 | HOSE – HYDRAULIC (9335 MM LG) | 1 | 285420–346189 |
| 18 | 135233 | CLAMP – DOUBLE HOSE INSULATED | 3 | 285420–346189 |
| 19 | 184301 | CLAMP | 2 | 285420–346189 |
| 20 | 136325 | CAP – HYD SAE, 6 ORFS (SHIPPING ONLY) | A/R | 285420–346189 |
| 21 | 247596 | TUBE – SPACER, 0.5 IN ID, 0.75 IN OD | 1 | 285420–346189 |
| 22 | 247958 | BRACKET – SUPPORT | 1 | 285420–346189 |
| 23 | 247675 | GUARD – WELDMENT, SUPPORT-SMV | 1 | 285420–346189 |
| 24 | 247625 | ASSY – TRANS. COMPLETE PADDLE | 1 | 285420–346189 |
| | | | | |
| A | 152775 | BOLT – HEX HD M8 X 1.25 X 65-8.8-A2L | | |
| B | 184708 | WASHER – FLAT M8-200HV-A2L | | |
| C | 135337 | NUT – HEX FLG CTR LOC M8 X 1.25-8-A2L | | |
| D | 184714 | WASHER – FLAT REG M12-300HV-A3L | | |
| E | 136431 | NUT – HEX FLG CTR LOC M12 X 1.75-10-A3L | | |
| F | 184672 | BOLT – HEX HD M12 X 1.75 X 100-10.9-A3L | | |
| G | 136788 | BOLT – RHSN M6 X 1 X 75-8.8-A2L | | |
| H | 152668 | NUT – HEX FLG CTR LOC M6 X 1-8-A2L | | |
| J | 136399 | BOLT – HEX FLG HD TFL M12 X 1.75 X 25-8.8-A3L | | |
| K | 50101 | NUT – HEX FLG STVR LOC M10 X 1.5-10-A3L | | |
| L | 184711 | WASHER – FLAT REG M10-200HV-A3L | | |
| M | 136178 | BOLT – RHSN M10 X 1.5 X 20-8.8-A3L | | |
| N | 135799 | NUT – HEX FLG CTR LOC M10 X 1.5-10-A3L | | |
| P | 184667 | BOLT – RHSN M12 X 1.75 X 30-8.8-A3L | | |

# 58 (Option) Transport – Swing Completion / Selector Valve (2019 and Later)

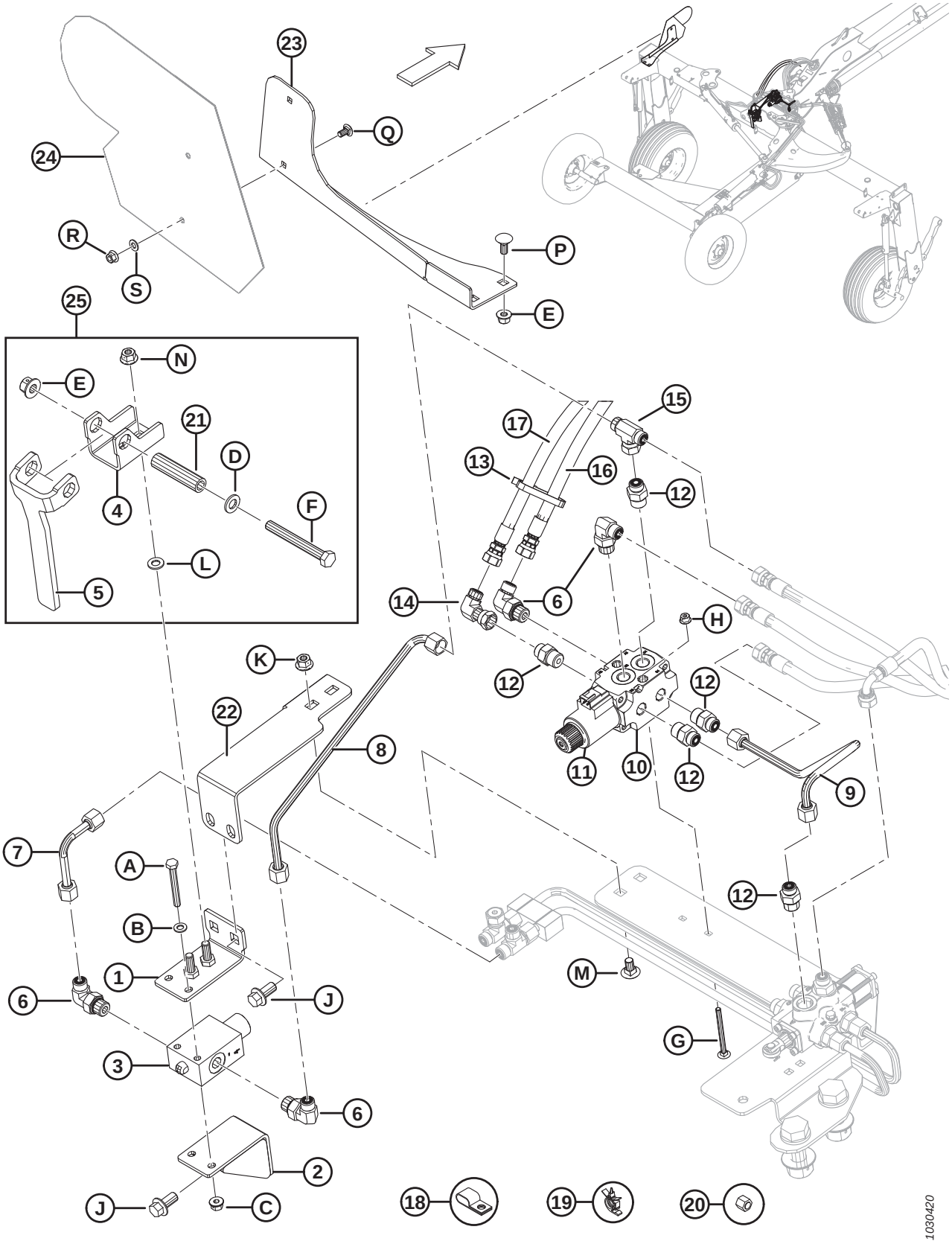

## (OPTION) TRANSPORT – SWING COMPLETION / SELECTOR VALVE (2019 AND LATER)

| Ref | Part Number | Description | Qty | Serial Number |
|---|---|---|---|---|
| 1 | 246277 | WELDMENT – VALVE SWITCH SUPPORT, TOP | 1 | 346190– |
| 2 | 246500 | WELDMENT – VALVE SWITCH SUPPORT, BOTTOM | 1 | 346190– |
| 3 | 246269 | VALVE – LIMIT SWITCH, NC, SPOOL | 1 | 346190– |
| 4 | 247597 | BRACKET – PIVOT | 1 | 346190– |
| 5 | 247598 | ARM – SWITCH LEVER | 1 | 346190– |
| 6 | 136149 | FITTING – ELBOW 90° HYD C/W O-RING | 4 | 346190– |
| | 44209 | O-RING – SAE #8 | | |
| | 135865 | O-RING – #6 ORFS | | |
| 7 | 246954 | LINE – HYDRAULIC | 1 | 346190– |
| 8 | 247335 | LINE – HYDRAULIC | 1 | 346190– |
| 9 | 247336 | LINE – HYDRAULIC | 1 | 346190– |
| 10 | 246524 | VALVE – 6 WAY 2 POSITION, SOLENOID OPERATED | 1 | 346190– |
| 11 | 247033 | COIL – SOLENOID | 1 | 346190– |
| 12 | 191705 | FITTING – ADAPTER 6 MORFS X 8 MORB | 4 | 346190– |
| | 44209 | O-RING – SAE #8 | | |
| | 135865 | O-RING – #6 ORFS | | |
| 13 | 30753 | FASTENER – CABLE TIE | 4 | 346190– |
| 14 | 136249 | FITTING – ELBOW 90° HYDRAULIC | 1 | 346190– |
| | 135865 | O-RING – #6 ORFS | | |
| 15 | 136672 | FITTING – HYDRAULIC TEE | 1 | 346190– |
| | 135865 | O-RING – #6 ORFS | | |
| 16 | 224162 | HOSE – HYDRAULIC (9335 MM LG) | 1 | 346190– |
| 17 | 224163 | HOSE – HYDRAULIC (9335 MM LG) | 1 | 346190– |
| 18 | 135233 | CLAMP – DOUBLE HOSE INSULATED | 3 | 346190– |
| 19 | 184301 | CLAMP | 2 | 346190– |
| 20 | 136325 | CAP – HYD SAE, 6 ORFS (SHIPPING ONLY) | A/R | 346190– |
| 21 | 247596 | TUBE – SPACER, 0.5 IN ID, 0.75 IN OD | 1 | 346190– |
| 22 | 247958 | BRACKET – SUPPORT | 1 | 346190– |
| 23 | 259218 | WELDMENT – SMV, SIS SIGN BRACKET | 1 | 346190– |
| 24 | 258262 | ASSEMBLY – BRACKET W/ SMV AND SIS [196] | 1 | 346190– |
| 25 | 247625 | ASSEMBLY – TRANS. COMPLETE PADDLE | 1 | 346190– |
| | | | | |
| A | 152775 | BOLT – HEX HD M8 X 1.25 X 65-8.8-A2L | | |
| B | 184708 | WASHER – FLAT M8-200HV-A2L | | |
| C | 135337 | NUT – HEX FLG CTR LOC M8 X 1.25-8-A2L | | |
| D | 184714 | WASHER – FLAT REG M12-300HV-A3L | | |
| E | 136431 | NUT – HEX FLG CTR LOC M12 X 1.75-10-A3L | | |
| F | 184672 | BOLT – HEX HD M12 X 1.75 X 100-10.9-A3L | | |
| G | 136788 | BOLT – RHSN M6 X 1 X 75-8.8-A2L | | |
| H | 152668 | NUT – HEX FLG CTR LOC M6 X 1-8-A2L | | |
| J | 136399 | BOLT – HEX FLG HD TFL M12 X 1.75 X 25-8.8-A3L | | |
| K | 50101 | NUT – HEX FLG STVR LOC M10 X 1.5-10-A3L | | |
| L | 184711 | WASHER – FLAT REG M10-200HV-A3L | | |

196. Includes SMV decal MD #115148. For SIS decals, refer to Section *32 Decals and Reflectors, page 95*.

## (OPTION) TRANSPORT – SWING COMPLETION / SELECTOR VALVE (2019 AND LATER)

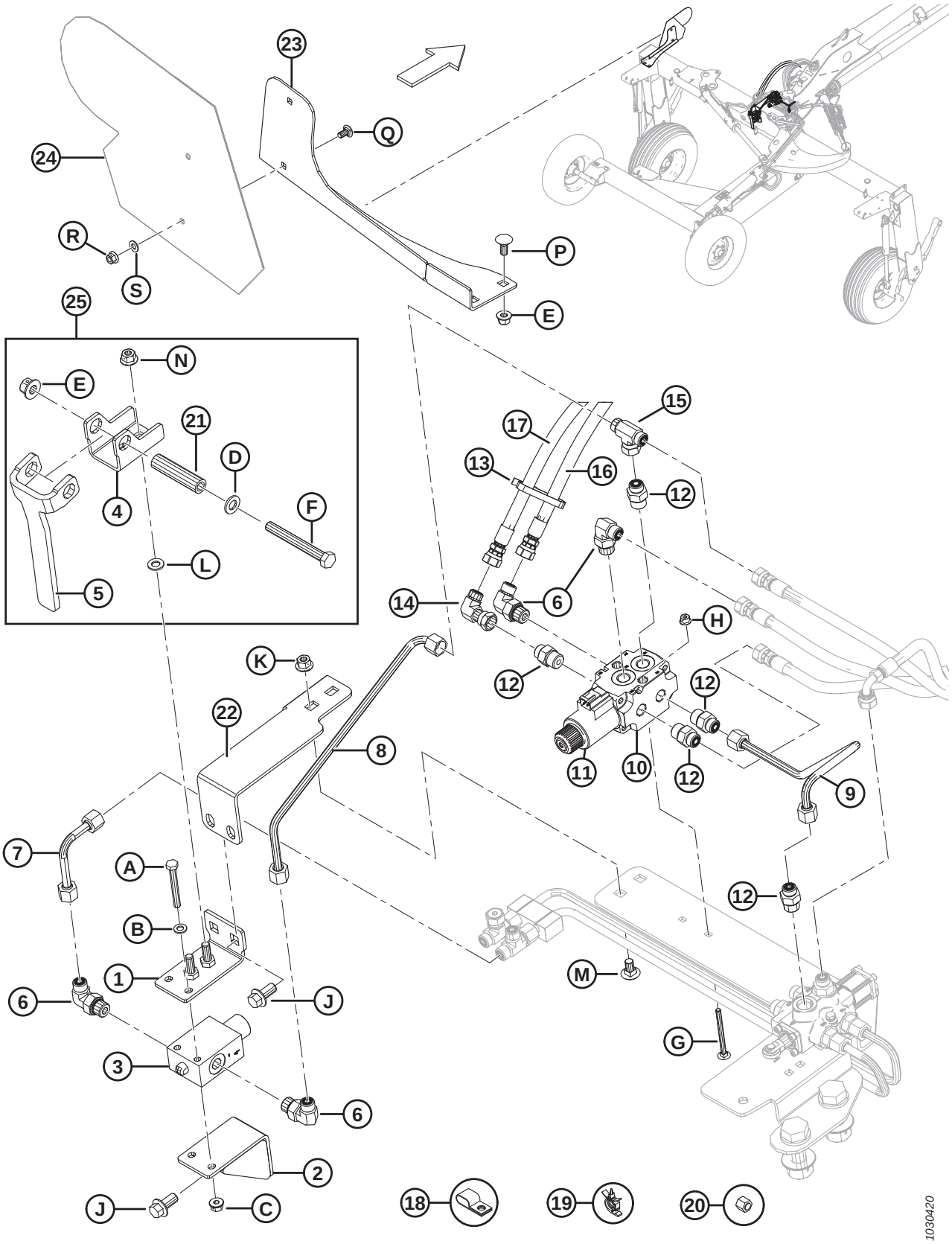

## (OPTION) TRANSPORT – SWING COMPLETION / SELECTOR VALVE (2019 AND LATER)

| Ref | Part Number | Description | Qty | Serial Number |
|---|---|---|---|---|
| M | 136178 | BOLT – RHSN M10 X 1.5 X 20-8.8-A3L | | |
| N | 135799 | NUT – HEX FLG CTR LOC M10 X 1.5-10-A3L | | |
| P | 184667 | BOLT – RHSN M12 X 1.75 X 30-8.8-A3L | | |
| Q | 184657 | BOLT – RHSSN M10 X 1.5 X 20-8.8-AA1J | | |
| R | 135799 | NUT – HEX FLG CTR LOC M10 X 1.5-10 | | |
| S | 18670 | WASHER – FLAT SAE 7/16 ID X 1.0 IN OD AA1J | | |

# 59 (Option) Transport – Tongue to Hitch Latch

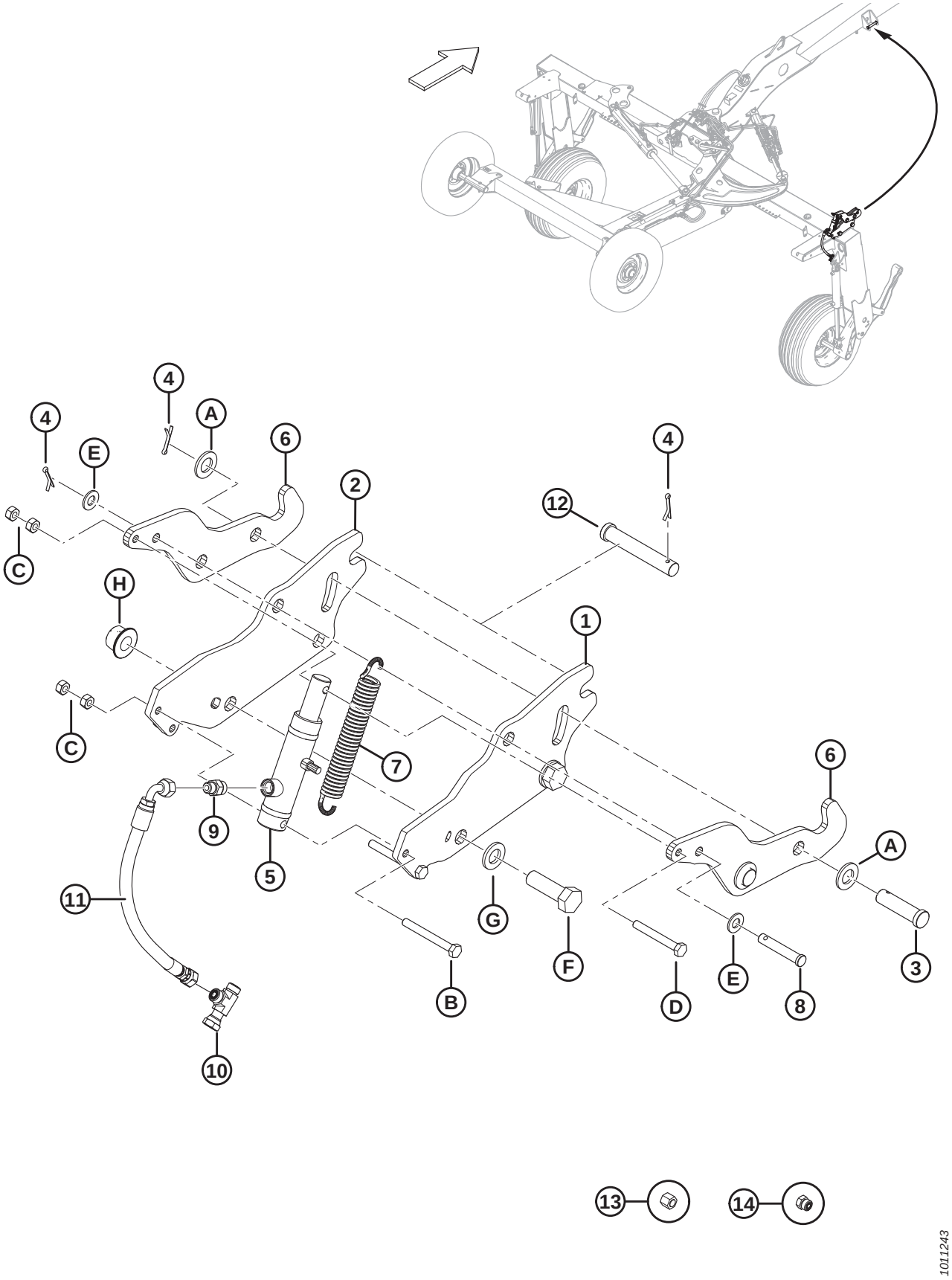

## (OPTION) TRANSPORT – TONGUE TO HITCH LATCH

| Ref | Part Number | Description | Qty | Serial Number |
|---|---|---|---|---|
| 1 | 281377 | PLATE – LATCH, RH [197] | 1 | |
| 2 | 223879 | PLATE – LATCH, LH | 1 | |
| 3 | 30463 | PIN – CLEVIS (18.89 MM, 58 MM) | 2 | |
| 4 | 18648 | PIN – COTTER 3/16 DIA X 1.25 ZP | 4 | |
| 5 | 111599 | CYLINDER – HYDRAULIC | 1 | |
| | 166171 | SEAL KIT | | |
| 6 | 224014 | PLATE – LATCH | 2 | |
| 7 | 246754 | SPRING – EXTENSION | 1 | |
| 8 | 19926 | PIN – CLEVIS (12.54 MM, 58 MM) | 1 | |
| 9 | 135778 | FITTING – ADAPTER | 1 | |
| | 50219 | O-RING | | |
| | 135865 | O-RING | | |
| 10 | 136097 | FITTING – TEE HYDRAULIC | 1 | |
| | 135865 | O-RING – #6 ORFS | | |
| 11 | 259027 | HOSE – HYDRAULIC [198] | 1 | |
| 12 | 18667 | PIN – CLEVIS (18.89 MM, 105 MM) | 1 | |
| 13 | 136325 | CAP – HYD SAE, 6 ORFS (SHIPPING ONLY) | A/R | |
| 14 | 136326 | PLUG – HYD SAE, 6 ORFS (SHIPPING ONLY) | A/R | |
| | 135865 | O-RING – #6 ORFS | | |
| | | | | |
| A | 18601 | WASHER – SAE FLAT 13/16 ID X 1.5 IN OD ZP | | |
| B | 30682 | BOLT – HEX HD M10 X 1.5 X 90-8.8-A3L | | |
| C | 30505 | NUT – HEX M10 X 1.5-10-A3L | | |
| D | 135657 | BOLT – HEX HD M10 X 1.5 X 80-8.8-A3L | | |
| E | 18599 | WASHER – SAE FLAT 17/32 ID X 1 1/16 IN OD ZP | | |
| F | 136157 | BOLT – HEX HD M20 X 2.5 X 65-10.9-A3L | | |
| G | 112130 | WASHER – HARDENED | | |
| H | 136122 | NUT – HEX FLG CTR LOC M20 X 2.5-10-A3L | | |

197. Includes pinch point decal (MD #246959).
198. On 2017 and prior machines, service hose (MD #224241) with kit MD #259029.

# 60 (Option) Two-Point Hitch Adapter (2018 and Prior)

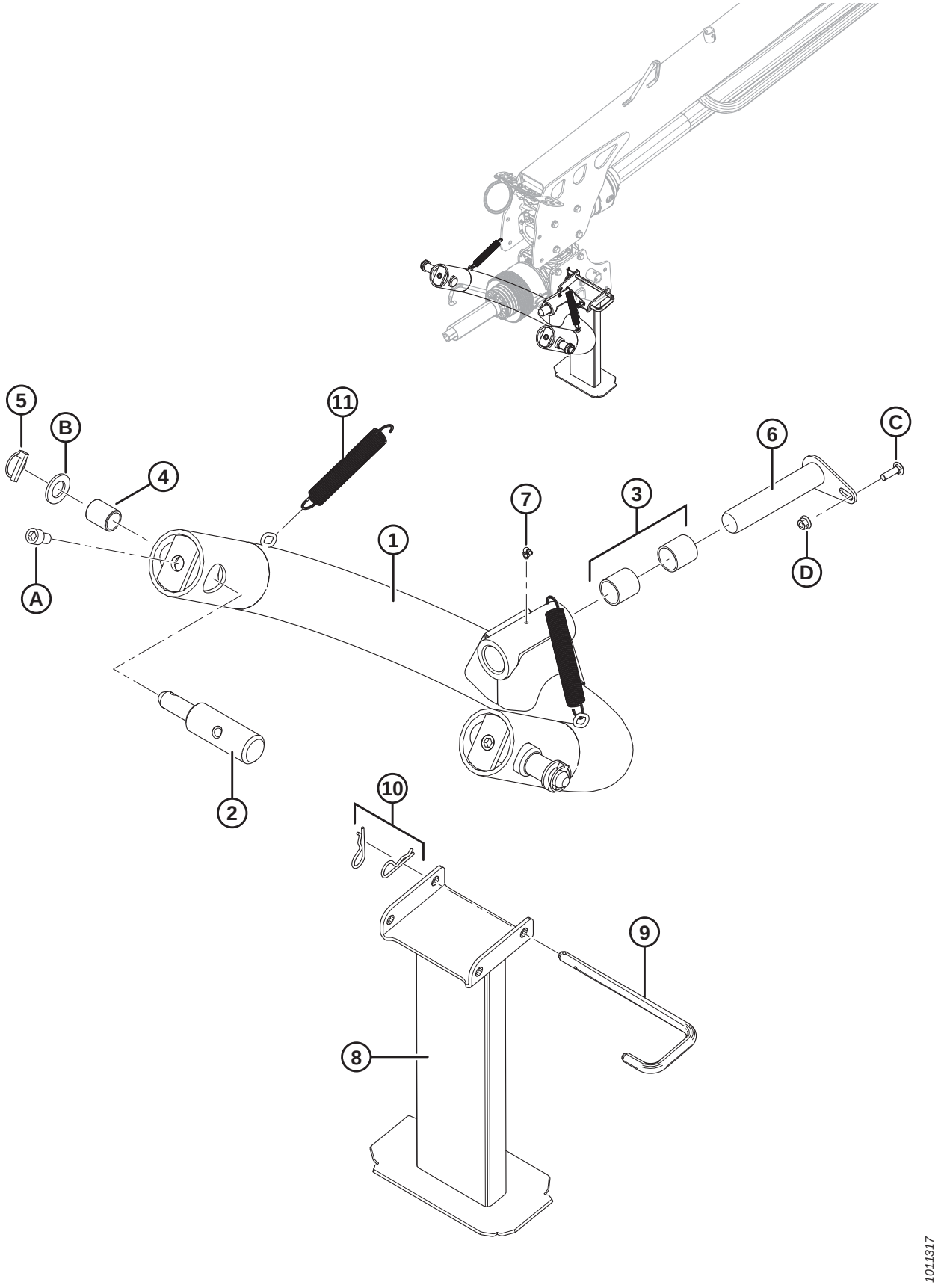

## (OPTION) TWO-POINT HITCH ADAPTER (2018 AND PRIOR)

| Ref | Part Number | Description | Qty | Serial Number |
|---|---|---|---|---|
| | B5807 | KIT – 2-POINT LINKAGE COUPLING [199] | | |
| | | | | |
| 1 | 247520 | ASSEMBLY – 2 PT, C/W BUSHINGS [200] | 1 | |
| 2 | 222843 | PIN – HITCH | 2 | |
| 3 | 281457 | BUSHING | 2 | |
| 4 | 224322 | BUSHING – CAT II TO III | 2 | |
| 5 | 113561 | PIN – LYNCH | 2 | |
| 6 | 223060 | PIN – WELD'T | 1 | |
| 7 | 252174 | FITTING – LUBE 90° M8-1 TAPER THD | 1 | |
| 8 | 224571 | STAND – WELD'T | 1 | |
| 9 | 224573 | PIN – HITCH | 1 | |
| 10 | 13125 | PIN – HAIR | 2 | |
| 11 | 247222 | SPRING – EXTENSION | 2 | |
| | | | | |
| A | 252169 | SCREW – HEX SOC HD M16 X 2 X 25-8.8-A3L | | |
| B | 259096 | WASHER – FLAT | | |
| C | 136248 | BOLT – RHSSN TFL M10 X 1.5 X 35-8.8-A3L | | |
| D | 135799 | NUT – HEX FLG CTR LOC M10 X 1.5-10-A3L | | |

199. Kits are available through Whole Goods only.
200. Includes two-point hitch (NSS), two bushings (MD #281457), and fitting (MD #252174).

# 61 (Option) Two-Point Hitch Adapter (2019 and Later)

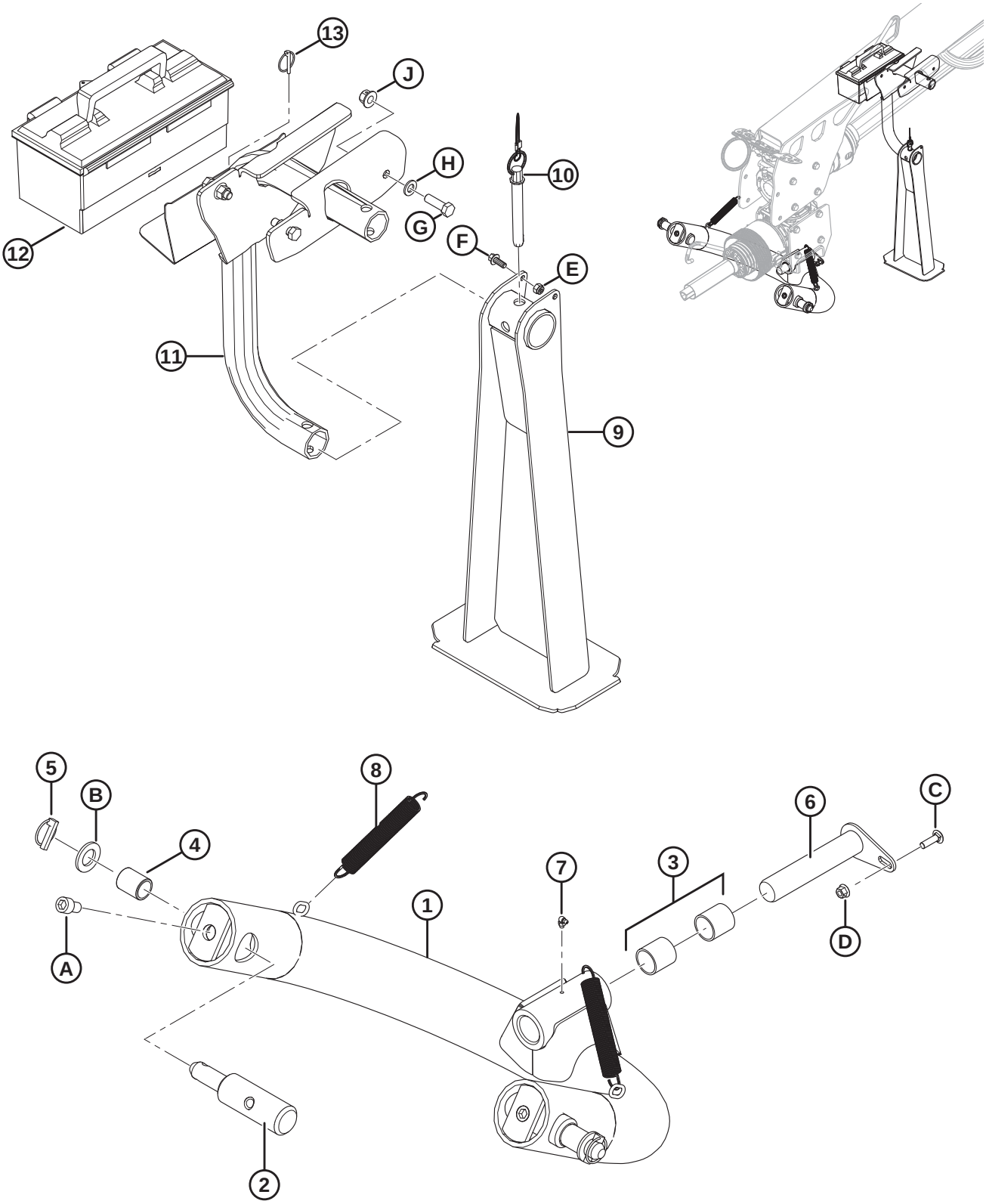

## (OPTION) TWO-POINT HITCH ADAPTER (2019 AND LATER)

| Ref | Part Number | Description | Qty | Serial Number |
|---|---|---|---|---|
| | B6790 | KIT – 2-POINT LINKAGE COUPLING [201] | | |
| | | | | |
| 1 | 247520 | ASSEMBLY – 2 PT, C/W BUSHINGS [202] | 1 | |
| 2 | 222843 | PIN – HITCH | 2 | |
| 3 | 281457 | BUSHING | 2 | |
| 4 | 224322 | BUSHING – CAT II TO III | 2 | |
| 5 | 113561 | PIN – LYNCH | 2 | |
| 6 | 223060 | PIN – WELD'T | 1 | |
| 7 | 252174 | FITTING – LUBE 90° M8-1 TAPER THD | 1 | |
| 8 | 247222 | SPRING – EXTENSION | 2 | |
| 9 | 259455 | ASSEMBLY – 2PT STAND [203] | 1 | |
| 10 | 259327 | PIN – 2PT STAND | 1 | |
| 11 | 259457 | WELDMENT – TUBE JACK STAND | 1 | |
| 12 | 259419 | TOOL BOX | 1 | |
| 13 | 50193 | PIN – LYNCH | 1 | |
| | | | | |
| A | 252169 | SCREW – HEX SOC HD M16 X 2 X 25-8.8-A3L | | |
| B | 259096 | WASHER – FLAT | | |
| C | 136248 | BOLT – RHSSN TFL M10 X 1.5 X 35-8.8-A3L | | |
| D | 135799 | NUT – HEX FLG CTR LOC M10 X 1.5-10-A3L | | |
| E | 184688 | NUT – HEX NYLOC M8 X 1.25-8-AA1J | | |
| F | 136300 | BOLT – HEX FLG HD TFL M8 X 1.25 X 20-8.8-AA3L | | |
| G | 184669 | BOLT – HEX HD M12 X 1.75 X 40-8.8-AA1J | | |
| H | 184714 | WASHER – FLAT REG M12-300HV | | |
| J | 136431 | NUT – HEX FLG CTR LOC M12 X 1.75-10 | | |

201. Kits are available through Whole Goods only.
202. Includes two-point hitch (NSS), two bushings (MD #281457), and fitting (MD #252174).
203. Includes pin (MD #259327), bolt (MD #136300), and nut (MD #184688).

# Index


4761 ..... 56
4762 ..... 28
5113 ..... 60, 70, 80
7782 ..... 58, 68, 74, 88, 110, 112, 116
9423 ..... 68
11460 ..... 140
13125 ..... 110, 112, 116, 172
13617 ..... 58
15380 ..... 38, 130
16235 ..... 44, 48
17675 ..... 56
18596 ..... 38
18599 ..... 170
18601 ..... 80, 170
18603 ..... 110, 112, 116
18605 ..... 62
18608 ..... 74, 78, 80, 126, 128, 140
18609 ..... 74, 84, 138, 142, 146, 150, 154, 158
18620 ..... 42, 46, 52
18629 ..... 126
18648 ..... 42, 46, 52, 56, 62, 170
18667 ..... 170
18670 ..... 76, 168
18671 ..... 46, 138
18899 ..... 138
18916 ..... 78, 140
19878 ..... 78, 140
19926 ..... 170
19958 ..... 56, 62
20312 ..... 80, 128
21010 ..... 82, 138
21153 ..... 78, 140
21301 ..... 42, 74
21404 ..... 110, 112, 116, 124
21540 ..... 118
21763 ..... 76, 84, 124, 126, 128
21804 ..... 84
21936 ..... 88
23164 ..... 96
23165 ..... 96
23950 ..... 102
23957 ..... 102
25579 ..... 138
25991 ..... 102
30087 ..... 42
30463 ..... 80, 170
30464 ..... 80
30505 ..... 60, 70, 170
30627 ..... 38, 72
30630 ..... 130
30635 ..... 60, 70, 152
30655 ..... 60, 70
30682 ..... 170
30701 ..... 78, 138
30702 ..... 78, 138
30710 ..... 86
30753 ..... 140, 142, 146, 150, 154, 158, 162, 164, 166
30836 ..... 42, 46, 54
30855 ..... 76, 86, 152
30889 ..... 78
30934 ..... 88
31774 ..... 78, 140
32070 ..... 96
32247 ..... 60, 70
32879 ..... 102
32880 ..... 102
35618 ..... 104
42104 ..... 80
42431 ..... 80
42432 ..... 80
42433 ..... 80
42434 ..... 80
42592 ..... 38
44209 ..... 74, 84, 126, 128, 138, 142, 146, 150, 154, 158, 162, 164, 166
50101 ..... 76, 152, 162, 164, 166
50155 ..... 44, 48, 60
50174 ..... 78, 138
50184 ..... 154, 158
50193 ..... 58, 112, 116, 124, 174
50219 ..... 74, 84, 126, 128, 138, 142, 146, 150, 154, 158, 170
101375 ..... 96
102264 ..... 110, 112, 116
102265 ..... 74
103580 ..... 126
108172 ..... 24, 26
111242 ..... 90, 92, 94, 120, 122
111528 ..... 60, 70, 72, 88
111599 ..... 170
112130 ..... 76, 80, 110, 112, 116, 142, 146, 152, 162, 170
112624 ..... 58, 74, 80
113482 ..... 96
113561 ..... 172, 174
113799 ..... 42, 46, 56, 58, 62, 68
115145 ..... 98
115146 ..... 38, 58, 68, 98
115147 ..... 38, 98
115148 ..... 96
118234 ..... 38
120901 ..... 88
132117 ..... 98
132898 ..... 98
134029 ..... 86
134741 ..... 152
134742 ..... 152

**INDEX**


135148 ..... 102
135155 ..... 24, 26
135200 ..... 28
135233 ..... 162, 164, 166
135337 ..... 22, 86, 126, 128, 140, 156, 160, 162, 164, 166
135369 ..... 44, 48, 70
135378 ..... 96
135402 ..... 124
135491 ..... 30
135563 ..... 84, 126, 128
135657 ..... 170
135691 ..... 66
135696 ..... 60
135723 ..... 56, 60, 62, 70, 72
135773 ..... 88
135774 ..... 88
135778 ..... 84, 138, 142, 146, 150, 154, 158, 170
135785 ..... 44, 48, 56, 62, 66, 86, 88
135799 ..... 24, 26, 38, 44, 48, 56, 60, 62, 66, 70, 72, 76, 80, 88, 104, 110, 112, 116, 128, 154, 158, 164, 168, 172, 174
135815 ..... 58, 68
135852 ..... 40, 60, 70
135865 ..... 74, 84, 126, 128, 138, 142, 146, 150, 154, 158, 162, 164, 166, 170
135894 ..... 140
135903 ..... 56, 66, 70
135927 ..... 142, 146, 152
135945 ..... 56, 62
136080 ..... 124
136082 ..... 24, 118
136088 ..... 80
136095 ..... 126, 128
136097 ..... 146, 150, 154, 158, 170
136098 ..... 142, 146, 150
136122 ..... 76, 80, 110, 112, 116, 124, 142, 146, 152, 170
136124 ..... 24, 26, 44, 48, 76, 110, 112, 116
136132 ..... 24
136137 ..... 30
136141 ..... 26, 44, 154, 158
136143 ..... 30, 88
136144 ..... 74
136147 ..... 74, 84, 138, 142, 146, 150, 154, 158
136148 ..... 70
136149 ..... 74, 84, 138, 142, 146, 150, 154, 158, 162, 164, 166
136151 ..... 38, 48
136157 ..... 26, 76, 110, 112, 116, 142, 148, 152, 162, 170
136162 ..... 84
136172 ..... 44, 48
136178 ..... 44, 48, 152, 164, 168
136209 ..... 152
136211 ..... 30, 142, 148, 152
136226 ..... 138, 142, 146, 150
136248 ..... 110, 112, 118, 172, 174
136249 ..... 154, 158, 162, 164, 166
136252 ..... 40, 76
136291 ..... 44, 48, 60
136300 ..... 60, 174
136313 ..... 76, 86, 152
136317 ..... 126, 128
136320 ..... 126, 128
136325 ..... 76, 126, 128, 142, 146, 150, 154, 158, 162, 164, 166, 170
136326 ..... 170
136381 ..... 84
136382 ..... 84
136384 ..... 84
136399 ..... 76, 162, 164, 166
136401 ..... 104
136422 ..... 118
136423 ..... 44, 48, 70
136428 ..... 72
136431 ..... 24, 26, 44, 48, 56, 60, 62, 66, 70, 76, 104, 114, 118, 140, 142, 148, 152, 162, 164, 166, 174
136440 ..... 24, 26, 44, 48, 60, 62, 70, 72, 88, 156, 160
136442 ..... 142, 148, 152
136453 ..... 76
136477 ..... 76, 80, 128
136485 ..... 30, 88, 134
136595 ..... 144, 148, 152
136616 ..... 42
136650 ..... 76, 80, 118
136659 ..... 146, 150, 154, 158
136672 ..... 146, 150, 154, 158, 162, 164, 166
136717 ..... 26, 48, 52
136788 ..... 162, 164, 166
136832 ..... 42, 46
136843 ..... 38
136876 ..... 38
136881 ..... 64, 70
136887 ..... 110, 112
139130 ..... 162
140246 ..... 78, 138
140247 ..... 78, 138
140248 ..... 78, 138
140249 ..... 78, 138
140250 ..... 78, 140
142376 ..... 74, 80
146487 ..... 76
146783 ..... 28, 36
146784 ..... 36, 88
148645 ..... 38, 78, 86, 140
148798 ..... 24, 26, 86
148799 ..... 30, 60
148851 ..... 84, 138, 142, 146, 150, 154, 158
149183 ..... 58, 68
149767 ..... 126, 128
150519 ..... 126, 128
150651 ..... 96

**INDEX**


152193 ..... 62
152274 ..... 44
152439 ..... 56, 62, 136
152520 ..... 60, 70
152602 ..... 30
152655 ..... 30, 38, 80, 86, 134
152668 ..... 38, 144, 148, 152, 162, 164, 166
152702 ..... 60, 70
152730 ..... 38
152732 ..... 128
152775 ..... 156, 160, 162, 164, 166
152779 ..... 144, 148, 152
152947 ..... 50, 52
156501 ..... 142, 146, 150
156741 ..... 80
156743 ..... 76
163162 ..... 162
163598 ..... 84
163921 ..... 138
166171 ..... 170
166466 ..... 96
166747 ..... 56
171068 ..... 84
171287 ..... 96
174436 ..... 96
181511 ..... 30, 60, 70
183866 ..... 38
184301 ..... 162, 164, 166
184303 ..... 86
184371 ..... 96
184372 ..... 38, 96
184385 ..... 96
184386 ..... 96
184587 ..... 104
184596 ..... 56, 60, 62, 70
184641 ..... 38
184657 ..... 40, 66, 70, 76, 104, 168
184658 ..... 154, 158
184659 ..... 60, 70
184661 ..... 80
184662 ..... 56, 62, 66, 76, 88
184667 ..... 44, 48, 76, 162, 164, 168
184669 ..... 44, 48, 56, 112, 118, 174
184672 ..... 24, 26, 70, 162, 164, 166
184673 ..... 24, 26, 78, 140
184675 ..... 44, 48, 56, 70, 140
184678 ..... 44, 48, 60, 70
184681 ..... 26, 48, 62
184688 ..... 174
184697 ..... 136
184699 ..... 44, 48
184701 ..... 20, 60, 70, 130
184705 ..... 144, 148, 152
184708 ..... 86, 126, 128, 156, 160, 162, 164, 166
184709 ..... 22
184711 ..... 24, 26, 40, 80, 164, 166
184712 ..... 40, 72
184714 ..... 24, 26, 44, 48, 56, 60, 64, 70, 114, 118, 140, 162, 164, 166, 174
184717 ..... 28, 60, 64, 70, 126, 154, 158
187133 ..... 62
190546 ..... 96
191705 ..... 84, 126, 128, 138, 142, 146, 150, 154, 158, 162, 164, 166
193241 ..... 96
193242 ..... 96
194463 ..... 96
194464 ..... 96
194465 ..... 96
194466 ..... 96
194468 ..... 96
197157 ..... 110, 112, 116
197171 ..... 22
203547 ..... 38, 76
203548 ..... 38, 76
203549 ..... 76
221716 ..... 42, 62
221765 ..... 42, 46
221768 ..... 42, 46
221769 ..... 42, 46, 62
221833 ..... 80
221937 ..... 42, 46
221938 ..... 42, 46
221997 ..... 58, 68
222028 ..... 58
222029 ..... 68
222042 ..... 62
222231 ..... 80
222269 ..... 28
222291 ..... 28
222658 ..... 42, 46
222664 ..... 42, 46
222786 ..... 82
222843 ..... 172, 174
222988 ..... 42, 46
223014 ..... 56
223060 ..... 110, 112, 116, 172, 174
223180 ..... 74
223181 ..... 74
223185 ..... 38, 152
223232 ..... 136
223236 ..... 136
223248 ..... 136
223321 ..... 74
223326 ..... 124
223333 ..... 74
223334 ..... 74
223370 ..... 62
223371 ..... 62
223389 ..... 42

**INDEX**


223406 ..... 42, 46
223425 ..... 74
223427 ..... 74
223443 ..... 58, 68
223444 ..... 58, 68
223467 ..... 42, 46
223500 ..... 62
223537 ..... 76
223543 ..... 76
223544 ..... 76
223545 ..... 76
223587 ..... 126
223879 ..... 170
223883 ..... 38
223884 ..... 38
223888 ..... 38
223889 ..... 66
223904 ..... 38
223973 ..... 62
223981 ..... 84, 154, 158
223982 ..... 138, 142, 146, 150
224014 ..... 170
224039 ..... 56
224106 ..... 138
224131 ..... 84
224160 ..... 84
224161 ..... 84
224162 ..... 84, 162, 164, 166
224163 ..... 84, 162, 164, 166
224164 ..... 126, 128
224165 ..... 126, 128
224166 ..... 76
224167 ..... 76
224236 ..... 140
224272 ..... 80
224313 ..... 38, 68
224320 ..... 72
224322 ..... 172, 174
224327 ..... 72
224337 ..... 110, 112, 116
224373 ..... 88
224438 ..... 28
224446 ..... 92
224471 ..... 38
224523 ..... 88
224554 ..... 42, 46
224556 ..... 62
224557 ..... 62
224560 ..... 62
224562 ..... 58
224571 ..... 172
224573 ..... 172
224595 ..... 28, 32
224601 ..... 88
224605 ..... 58, 68
224686 ..... 38
224707 ..... 142, 146, 150
224717 ..... 142, 146, 150
224761 ..... 58
224762 ..... 58
224795 ..... 142, 146, 150
224861 ..... 66
224862 ..... 66
224869 ..... 56, 62
224892 ..... 68
224943 ..... 142, 146, 150
224944 ..... 142, 146, 150
224977 ..... 56
224986 ..... 58
230403 ..... 140
232395 ..... 126, 128
236994 ..... 36
238001 ..... 152
238003 ..... 80
238015 ..... 8
238016 ..... 8
238026 ..... 16
238031 ..... 16, 18
238032 ..... 16, 18
238054 ..... 58
238103 ..... 36
238147 ..... 24, 26
238178 ..... 74
238179 ..... 74
238184 ..... 86
238193 ..... 78, 138
238195 ..... 14
238222 ..... 74, 84
238227 ..... 10, 14, 18, 132
239007 ..... 88, 90
239009 ..... 90
239049 ..... 22
242381 ..... 92
245966 ..... 58, 68
246013 ..... 68
246023 ..... 68
246036 ..... 126
246080 ..... 34
246082 ..... 34
246083 ..... 34
246084 ..... 34
246085 ..... 34
246086 ..... 34
246087 ..... 28
246100 ..... 28
246101 ..... 28
246164 ..... 140
246166 ..... 88, 90
246167 ..... 28
246175 ..... 56

**INDEX**


246178 ..... 110, 112, 118, 124
246184 ..... 28
246196 ..... 28
246198 ..... 74
246207 ..... 88
246224 ..... 56
246226 ..... 56, 66
246267 ..... 154, 158
246269 ..... 162, 164, 166
246277 ..... 162, 164, 166
246291 ..... 10, 14, 18
246295 ..... 2, 6, 132
246299 ..... 10
246300 ..... 10, 16, 18, 106, 108, 130, 132
246301 ..... 10, 18, 130
246303 ..... 12, 16, 18, 106, 108, 132
246305 ..... 10, 14, 18
246307 ..... 2, 6
246308 ..... 2, 6
246309 ..... 2, 6
246310 ..... 4, 8
246311 ..... 4, 8
246312 ..... 12, 16
246313 ..... 4, 8
246314 ..... 24, 26
246315 ..... 2, 6
246316 ..... 2, 6
246318 ..... 2, 6
246322 ..... 154, 158
246328 ..... 2, 6
246330 ..... 2, 6
246331 ..... 2, 6
246332 ..... 4, 8, 12, 16, 18
246346 ..... 38
246352 ..... 104
246354 ..... 154, 158
246355 ..... 56, 62
246363 ..... 66
246364 ..... 66
246366 ..... 142, 146, 150
246367 ..... 142
246370 ..... 142
246371 ..... 154
246388 ..... 38
246413 ..... 38
246420 ..... 88
246424 ..... 42, 46, 58, 62, 68
246444 ..... 154, 158
246454 ..... 142
246500 ..... 162, 164, 166
246507 ..... 138
246509 ..... 42
246510 ..... 42
246524 ..... 162, 164, 166
246558 ..... 86
246559 ..... 86
246562 ..... 154, 158
246565 ..... 154, 158
246574 ..... 82
246576 ..... 154, 158
246581 ..... 72
246583 ..... 58, 68
246586 ..... 96
246587 ..... 154, 158
246609 ..... 162
246612 ..... 2, 6
246613 ..... 2, 6
246614 ..... 2, 6
246615 ..... 4, 8
246616 ..... 2
246617 ..... 2, 6
246618 ..... 2
246621 ..... 2
246622 ..... 6
246623 ..... 6
246624 ..... 6
246625 ..... 4, 8
246626 ..... 154
246627 ..... 2, 6
246628 ..... 2, 6
246630 ..... 4, 8
246631 ..... 2, 6
246632 ..... 2, 6
246633 ..... 12, 16, 18, 134
246687 ..... 28
246691 ..... 28
246720 ..... 154, 158
246747 ..... 42, 46
246748 ..... 42, 46
246751 ..... 42, 46
246752 ..... 42, 46
246754 ..... 170
246762 ..... 44
246769 ..... 126
246770 ..... 28
246785 ..... 28
246799 ..... 44, 46
246841 ..... 62
246844 ..... 44, 46, 62
246845 ..... 58, 68
246846 ..... 58, 68
246847 ..... 44, 46, 62
246858 ..... 38
246872 ..... 4, 8
246873 ..... 38
246874 ..... 38
246876 ..... 38
246878 ..... 38
246880 ..... 38
246882 ..... 12, 16, 18, 134

**INDEX**


246896 ..... 100
246897 ..... 100
246900 ..... 96
246902 ..... 96
246910 ..... 100
246911 ..... 100
246920 ..... 92
246926 ..... 100
246927 ..... 100
246945 ..... 142, 146, 150
246947 ..... 154, 158
246950 ..... 86
246951 ..... 142, 146, 150
246952 ..... 12, 16, 18, 130, 134
246954 ..... 162, 164, 166
246956 ..... 96
246959 ..... 96
246991 ..... 2, 8
246997 ..... 100
246998 ..... 100
247004 ..... 100
247014 ..... 74
247015 ..... 74
247017 ..... 28
247031 ..... 36
247033 ..... 162, 164, 166
247039 ..... 36
247040 ..... 36
247041 ..... 36
247042 ..... 36
247043 ..... 36
247044 ..... 36
247045 ..... 36
247046 ..... 36
247047 ..... 36
247048 ..... 36
247049 ..... 36
247050 ..... 36
247051 ..... 36
247053 ..... 36
247054 ..... 36
247055 ..... 36
247056 ..... 36
247057 ..... 36
247059 ..... 36
247060 ..... 36
247061 ..... 36
247063 ..... 36
247065 ..... 36
247066 ..... 36
247067 ..... 36
247071 ..... 36
247079 ..... 34
247080 ..... 34
247081 ..... 34
247082 ..... 34
247083 ..... 34
247084 ..... 34
247085 ..... 34
247091 ..... 34
247094 ..... 34
247095 ..... 34
247096 ..... 34
247099 ..... 34
247100 ..... 34
247103 ..... 28
247110 ..... 74
247111 ..... 74
247112 ..... 28
247120 ..... 28, 134
247121 ..... 28, 134
247122 ..... 28, 134
247123 ..... 32, 90, 94, 120, 122
247124 ..... 32, 90, 122
247126 ..... 32, 90, 94, 120, 122
247127 ..... 32, 94, 120, 122
247128 ..... 32, 90, 94, 120, 122
247129 ..... 32, 90, 122
247130 ..... 96
247131 ..... 96
247132 ..... 32
247133 ..... 32, 90
247134 ..... 32
247135 ..... 36
247136 ..... 90
247138 ..... 90
247139 ..... 92
247143 ..... 90
247144 ..... 92
247145 ..... 92
247146 ..... 92
247147 ..... 92
247148 ..... 92
247149 ..... 92
247150 ..... 92
247151 ..... 92
247152 ..... 92
247153 ..... 92
247154 ..... 92
247155 ..... 90
247156 ..... 90
247157 ..... 90
247158 ..... 90
247159 ..... 90
247160 ..... 90
247161 ..... 94, 120, 122
247162 ..... 94, 120, 122
247167 ..... 96
247180 ..... 84
247181 ..... 138, 142, 146, 150

247182 ..... 96
247183 ..... 54
247184 ..... 54
247185 ..... 54
247186 ..... 54
247187 ..... 54
247188 ..... 54
247189 ..... 54
247190 ..... 54
247191 ..... 54
247192 ..... 54
247193 ..... 54
247194 ..... 54
247195 ..... 54
247196 ..... 54
247197 ..... 54
247199 ..... 54
247206 ..... 24, 26
247222 ..... 172, 174
247237 ..... 110, 112, 116
247239 ..... 10
247240 ..... 10
247242 ..... 10
247243 ..... 10
247245 ..... 110, 112, 116
247246 ..... 110, 112, 116
247250 ..... 142, 146, 150
247259 ..... 42, 48, 52
247264 ..... 78
247265 ..... 54
247275 ..... 56
247305 ..... 48
247307 ..... 48
247309 ..... 48
247315 ..... 104
247323 ..... 56
247335 ..... 162, 164, 166
247336 ..... 162, 164, 166
247373 ..... 68
247374 ..... 68
247376 ..... 68
247377 ..... 68
247420 ..... 48
247433 ..... 56
247445 ..... 60
247520 ..... 172, 174
247572 ..... 68
247575 ..... 62
247576 ..... 56
247596 ..... 162, 164, 166
247597 ..... 162, 164, 166
247598 ..... 162, 164, 166
247616 ..... 2
247625 ..... 162, 164, 166
247628 ..... 158
247631 ..... 68
247634 ..... 68
247637 ..... 2
247675 ..... 162, 164
247684 ..... 62
247693 ..... 60, 68
247726 ..... 140
247750 ..... 84
247781 ..... 146, 150
247793 ..... 146, 150
247794 ..... 146, 150
247799 ..... 146, 150
247800 ..... 74
247801 ..... 74
247803 ..... 96
247810 ..... 138
247811 ..... 94
247812 ..... 94
247813 ..... 88, 90
247814 ..... 88, 90, 94
247815 ..... 88, 90, 94
247822 ..... 84
247823 ..... 86
247826 ..... 28
247827 ..... 28
247831 ..... 88
247832 ..... 46
247836 ..... 42
247837 ..... 42
247841 ..... 44
247854 ..... 48
247855 ..... 48
247856 ..... 42, 46
247863 ..... 62
247883 ..... 76
247884 ..... 86
247899 ..... 84
247900 ..... 138, 142, 146, 150
247923 ..... 6
247924 ..... 6
247936 ..... 6
247937 ..... 6
247950 ..... 10
247958 ..... 164, 166
247971 ..... 68
252169 ..... 172, 174
252174 ..... 172, 174
252219 ..... 56
252270 ..... 86
252421 ..... 126, 128
252919 ..... 88
256192 ..... 58
256199 ..... 58
256375 ..... 28
256581 ..... 44, 46

**INDEX**


256640 ..... 58
256641 ..... 58
256661 ..... 122
256663 ..... 32, 90, 120, 122
256665 ..... 122
256666 ..... 122
256668 ..... 122
256674 ..... 122
257085 ..... 14, 18, 134
257086 ..... 14, 18, 134
257093 ..... 58, 68
257096 ..... 24, 26
257112 ..... 60, 68
257123 ..... 106
257135 ..... 130
257136 ..... 130
258262 ..... 76, 166
259019 ..... 120
259020 ..... 120
259027 ..... 170
259048 ..... 2, 6
259053 ..... 132
259056 ..... 96
259058 ..... 96
259086 ..... 138
259095 ..... 138
259096 ..... 172, 174
259099 ..... 12, 16, 18
259100 ..... 12, 16, 18
259107 ..... 158
259112 ..... 130
259113 ..... 18, 130
259117 ..... 18, 130
259139 ..... 28, 134
259140 ..... 134
259142 ..... 28
259154 ..... 112
259199 ..... 14, 18, 106, 130, 132
259200 ..... 14, 18, 106, 130, 132
259201 ..... 76
259218 ..... 166
259226 ..... 82
259227 ..... 82
259232 ..... 88
259294 ..... 68
259327 ..... 174
259416 ..... 10, 14
259419 ..... 112, 116, 174
259431 ..... 116
259438 ..... 116
259455 ..... 174
259457 ..... 112, 116, 174
259461 ..... 88
259516 ..... 28, 34
259517 ..... 10, 14
259518 ..... 14
259587 ..... 110, 112
259592 ..... 46
259605 ..... 110, 112, 116, 124
259622 ..... 48, 52
268350 ..... 80
280504 ..... 14, 18, 134
281014 ..... 28
281101 ..... 74, 84, 138, 142, 146, 150, 154, 158
281110 ..... 88
281111 ..... 128
281112 ..... 128
281324 ..... 42, 46
281325 ..... 42, 46
281331 ..... 2
281332 ..... 2
281333 ..... 2
281338 ..... 56
281339 ..... 56
281347 ..... 128
281348 ..... 128
281349 ..... 128
281362 ..... 18, 130
281363 ..... 18, 130
281364 ..... 18, 130
281365 ..... 18, 130
281366 ..... 14
281367 ..... 14
281370 ..... 14
281377 ..... 170
281378 ..... 28
281380 ..... 88
281400 ..... 84
281446 ..... 10
281447 ..... 10
281457 ..... 74, 110, 112, 116, 172, 174
281458 ..... 74
281489 ..... 28, 134
281493 ..... 28, 134
281497 ..... 28, 134
281500 ..... 28, 134
281501 ..... 28, 134
281508 ..... 90
281529 ..... 96
281532 ..... 88, 90
281535 ..... 128
281582 ..... 56
281583 ..... 56
281604 ..... 16, 106, 132
281605 ..... 16, 106, 132
281606 ..... 14, 106
281609 ..... 10, 16, 18
281611 ..... 86
281612 ..... 86
281613 ..... 76

281614 ..... 152
281615 ..... 86
281644 ..... 60, 68
281653 ..... 120, 122
281654 ..... 120, 122
281685 ..... 68
281695 ..... 58, 68
281697 ..... 16, 18, 134
281700 ..... 76
281715 ..... 90
281753 ..... 18
281755 ..... 18, 130
281780 ..... 62
281781 ..... 62
281782 ..... 62
281783 ..... 62
281784 ..... 62
281813 ..... 76
281818 ..... 56, 62
281865 ..... 18
281866 ..... 18
281911 ..... 134
281931 ..... 38, 130
281965 ..... 10, 18, 108
281966 ..... 10, 16, 18
281967 ..... 10, 16, 18
281981 ..... 28, 134
281986 ..... 58
292589 ..... 150
299410 ..... 134
302204 ..... 96
307175 ..... 6
307211 ..... 42, 46, 54
320208 ..... 50, 52
320225 ..... 24, 26, 44, 48
320226 ..... 24, 26, 28, 44, 48, 60, 68, 72
320289 ..... 74
320524 ..... 56, 66
325683 ..... 24, 26
325854 ..... 48, 52
325857 ..... 48, 52
338003 ..... 48, 52
338800 ..... 16, 20
338956 ..... 108
338995 ..... 22
359024 ..... 10, 16, 18
359026 ..... 2, 6
359027 ..... 2, 6
359040 ..... 2, 6
359065 ..... 108
359066 ..... 108
359122 ..... 14, 108
359253 ..... 48, 52

## B

B5760 ..... 126
B5800 ..... 136
B5802 ..... 124
B5807 ..... 172
B5808 ..... 110
B5810 ..... 128
B5949 ..... 86
B6390 ..... 120
B6391 ..... 120
B6555 ..... 122
B6556 ..... 122
B6622 ..... 138
B6633 ..... 112
B6699 ..... 130
B6700 ..... 130
B6790 ..... 174
B6791 ..... 112
B6996 ..... 116
B6997 ..... 116

MacDon

CUSTOMERS
**MacDon.com**

DEALERS
**Portal.MacDon.com**

Trademarks of products are the marks of their respective manufacturers and/or distributors.

Printed in Canada