D2 Series
Draper Header with FM200 Float Module

Parts Catalog

MAC215991 Revision A

Original Instruction

D2 Series FlexDraper® Header with FM200 Float Module

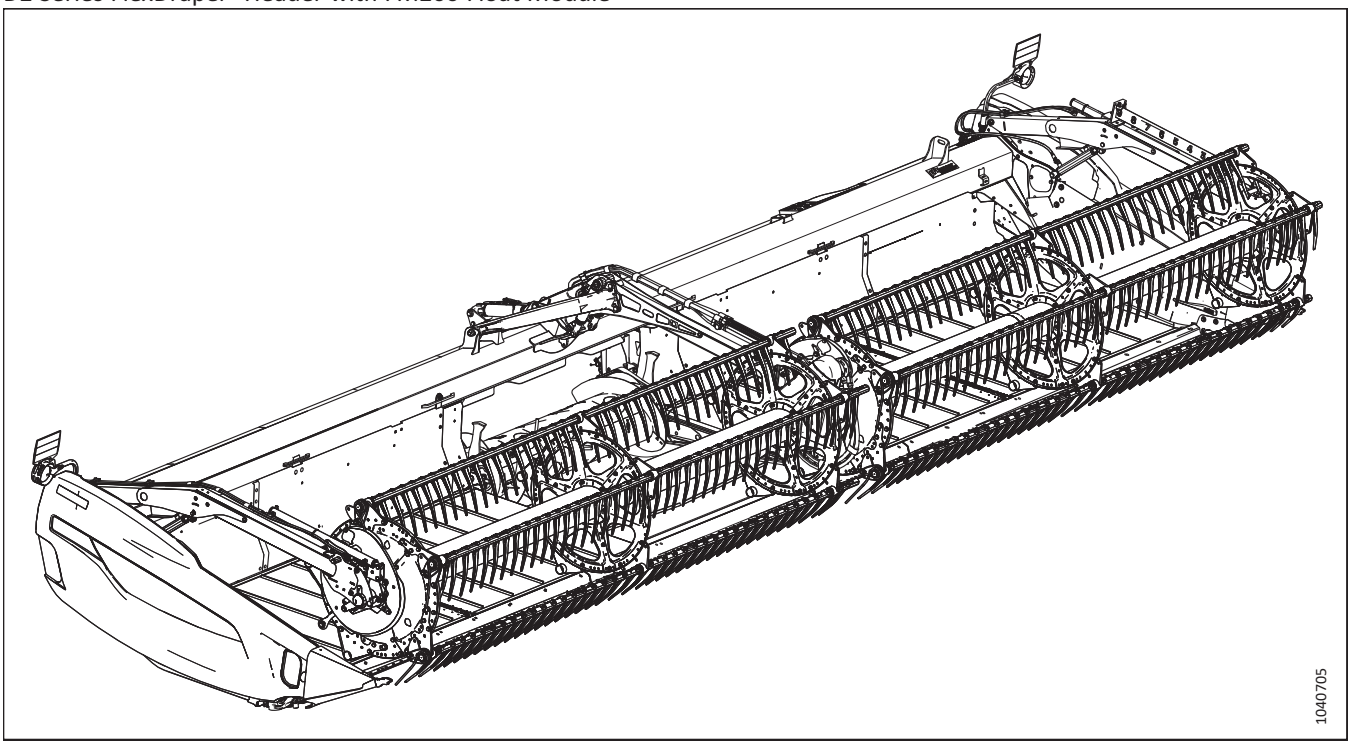

Published: January 2023

Introduction

This Parts Catalog lists all the replacement parts that can be ordered for a MacDon D2 Series Combine Header (Sections 1–113) and a FM200 Float Module (Sections 114–151).

When ordering, be sure the complete and proper part number is given. Some parts vary with header size; be sure you are ordering the correct part number for your unit.

NOTE:

Add the prefix MAC to part numbers when ordering Example: MAC123456.

Bold text is used to indicate updates made at the current revision level. With each new revision of the catalog, previous revisions are returned to regular text.

Electrical connectors used on MacDon products are available for sale but not listed in this catalog. For the list of available connectors, refer to the Electrical Connectors Parts Catalog (MAC169641).

In this catalog, right and left are determined from the operator's seated position in the combine. An arrow is sometimes used in illustrations to indicate forward position.

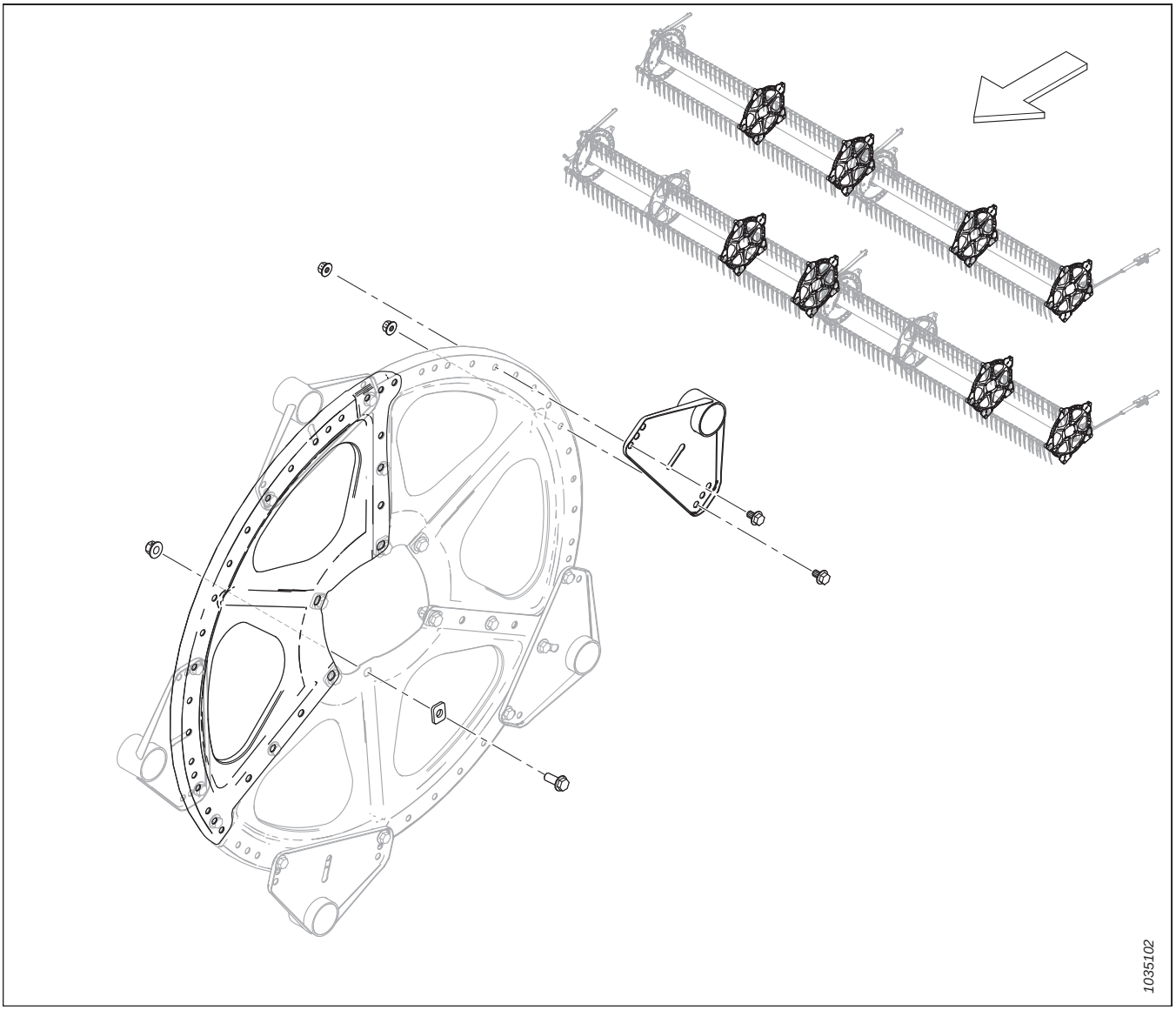

Abbreviations

A/R – as required (quantity varies)	ASSY – assembly	BHRN – button head rib neck
BV – ball valve	CCW – counterclockwise	CON – conical (spring washer)
CSK – countersink	C/W – complete with	CW – clockwise
DBLE – double	DK – double knife	DR – double reel
DT – distorted thread	FLG – flange	GA – gauge
GR – grade	GS – grass seed	HD – head
HDR – header	HFA – hydraulic fore-aft	HH – hex head
HNBR – hydrogenated nitrile butadiene rubber	HYD – hydraulic	I.D. – inside diameter
IP – internal plus (torx plus)	KP – knife pressure	KR – knife return
LG – long	LH – left hand (determined from Operator's position, facing forward)	LK – lock
MACH – machine	MD – MacDon	MFA – manual fore-aft
MY – model year	NC – national coarse thread	NF – national fine thread
NSS – not sold separately	NT – narrow transport	O.D. – outside diameter
OPT – optional	PO – pilot operated	PT – pull-type (mower conditioner)
RC – roller chain	REF – reference, part number called up elsewhere in catalog	REG – regular
RH – right hand (determined from Operator's position, facing forward)	RHSN – round head, square neck or square neck carriage bolt	RHSSN – round head, short, square neck
RTD – rotating tine drum	SAE – Society of Automotive Engineers (part produced to comply with)	SD – side draper
SER – serrated	SK – single knife	SKT HD – socket head
SMTH – smooth	SMV – slow moving vehicle	SOCK – socket
SP – self-propelled (windrower) header	SPCL – special	SPH – spherical
SPI – serrations per inch (knife Sections)	SR – single reel	STL – steel (stainless)
STR – standard	STVR – Stover	TFL – thread full length
THD – thread	TR – triple reel	UCA – upper cross auger
UDK – untimed double knife	UNC – unified coarse thread	UNEF – unified extra fine thread
UNF – unified fine thread	UNS – unified special thread series	VK – veritcal knife
WF – wide frame	ZP – zinc plated	

Serial Number Breaks

The side of the serial number on which the dash (–) appears determines whether the part is used "up to" or "after" the serial number given.

Example:

- –451189 Used on machines up to and including serial number 451189
- 451190– Used on machines including and after serial number 451190

Introduction i
Abbreviations ii
Serial Number Breaks iii

1 Header Frame End Panels 1
2 Header Frame – Split Frame Hardware 3
3 Manual Case and Knife Storage 5
4 Float Module Transition Pan 7
5 Divider Cones 9
6 Divider Rods and Storage 11
7 Endshields – New Holland 13
8 Endshield Mount Components 15
9 Draper 19
10 Draper – Backsheet Panels (D225) 21
11 Draper – Backsheet Panels (D230 and D235) 23
12 Draper – Backsheet Panels (D241) 27
13 Draper – Backsheet Panels (D245) 29
14 Draper – Tensioner 31
15 Draper – Drive Roller 35
16 Draper – Decks (D225, D230, and D235) 37
17 Draper – Decks (D241) 39
18 Draper – Decks (D245) 41
19 Draper – Tracks 43
20 Draper – Seals (D225, D230, and D235) 45
21 Draper – Seals (D241 and D245) 47
22 Draper Deflectors – Narrow 49
23 Guards, Hold-Downs, and Cutterbar Shoes – Single Knife, Pointed (D230 and D235) 51
24 Guards, Hold-Downs, and Cutterbar Shoes – Single Knife, PlugFree™ (D225 and D230) 53
25 Guards, Hold-Downs, and Cutterbar Shoes – Double Knife, Pointed (D241 and D245) 55
26 Guards, Hold-Downs, and Cutterbar Shoes – Double Knife, PlugFree™ (D241 and D245) 57
27 Knives – Single-Knife Headers, Coarse-Tooth Sections (D225, D230, and D235) 59
28 Knives – Double-Knife Headers, Coarse-Tooth Sections (D241) 63
29 Knives – Double-Knife Headers, Coarse-Tooth Sections (D245) 67
30 Knife Drive – Single and Double Knife 71
31 Knife Drive Box 75
32 Reel Support Arm and Lift Cylinders – Center Arm, Double Reel 79
33 Reel Support Arm and Lift Cylinders – Outer Arms, Double Reel 83
34 Reel Support Arm and Lift Cylinders – Outer Arms, Single Reel 85
35 Reel Arm Components – Right Arm, Single Reel 89
36 Reel Arm Components – Right Arm, Double Reel 91
37 Reel Arm Components – Center Arm, Double Reel 93
38 Reel Arm Components – Left Arm 95
39 Reel Drive – Single Reel 97
40 Reel Drive – Double Reel 101

41 Reel Cam Components – Right Arm, Double Reel 107
42 Reel – Tine Tube 109
43 Reel Discs – Cam End and Linkage 113
44 Reel Discs – Mid Span 115
45 Reel Discs – Tail End 117
46 Reel – Center Tubes, Single Reel 119
47 Reel – Center Tubes, Double Reel 121
48 Reel – Endshields, Cam End, Outboard (9 Bat) 123
49 Reel – Endshields, Tail End, Outboard (9 Bat) 125
50 Reel – Endshields, Cam End, Outboard (5 Bat and 6 Bat) 127
51 Reel – Endshields, Tail End, Outboard (5 Bat and 6 Bat) 129
52 Reel – Endshields, Cam End, Inboard (5 Bat and 6 Bat) 131
53 Reel – Endshields, Tail End, Inboard (5 Bat and 6 Bat) 133
54 Skid Shoes – End and Center 135
55 Hydraulics – Manifold Fittings and Fasteners 137
56 Hydraulics – Manifold Plugs 139
57 Hydraulics – Knife Drive, Single and Double Knife, Left Side (D225, D230, D235, and D241) 141
58 Hydraulics – Knife Drive, Double Knife, Left Side (D245) 145
59 Hydraulics – Knife Drive, Double Knife, Right Side (D241 and D245) 149
60 Hydraulics – Draper Drive, Center Delivery 153
61 Hydraulics – Draper Drive, Manifold Lines 157
62 Hydraulics – Lift and Fore-Aft, Single Reel, Left Arm (D225) 159
63 Hydraulics – Lift and Fore-Aft, Single Reel, Right Arm (D225) 163
64 Hydraulics – Lift and Fore-Aft, Double Reel, Left Arm (D230, D235, and D241) 167
65 Hydraulics – Lift and Fore-Aft, Double Reel, Left Arm (D245) 171
66 Hydraulics – Lift and Fore-Aft, Double Reel, Center Arm (D230, D235, D241, and D245) 175
67 Hydraulics – Lift and Fore-Aft, Double Reel, Right Arm (D230 and D235) 179
68 Hydraulics – Lift and Fore-Aft, Double Reel, Right Arm (D241 and D245) 183
69 Hydraulics – Reel Drive, Single Reel 187
70 Hydraulics – Reel Drive, Double Reel 191
71 Hydraulics – Upper Cross Auger 195
72 Hydraulic Line Covers – Center 199
73 Hydraulic Line Covers (D225, D230, and D235) 201
74 Hydraulic Line Covers (D241 and D245) 203
75 Electrical – Harness (D225) 205
76 Electrical – Harness (D230, D235, D241, and D245) 207
77 Electrical – Clearance Lights 209
78 Electrical – Reel Height Sensor 211
79 Electrical – Reel Fore-Aft Sensor 213
80 Decals and Reflectors – D2 Series 215
81 Decals – Product Identification, New Holland 217
82 Decals – French 219
83 Decals – Portuguese 221

84 Decals – Russian 223
85 Decals – Spanish 225
86 (Option) Crop Lifters and Storage Rack 227
87 (Option) Divider Storage Bracket 229
88 (Option) EasyMove™ – Slow Speed Transport, Base Kit and Stabilizer Wheels 231
89 (Option) EasyMove™ – Slow Speed Transport, Wheels, Tires, and Tow Poles 239
90 (Option) Floating Crop Dividers 243
91 (Option) Four-Point Guard Kits, Single Knife 247
92 (Option) Four-Point Guard Kits, Double Knife 249
93 (Option) High Wear Skid Shoes 251
94 (Option) Reel Tine Tube Conversion Kits – Double Reel, 5 Bat to 6 Bat 253
95 (Option) Reel Tine Tube Conversion Kits – Double Reel, 6 Bat to 9 Bat 257
96 (Option) Reel – Two Speed 261
97 (Option) Rice Divider Rods 263
98 (Option) Rock Retarder Kit 265
99 (Option) Service Kit – Pointed Guards, Coarse Knives 267
100 (Option) Service Kit – PlugFree™ Guards, Coarse Knives 269
101 (Option) Service Kit Plus – Single Knife 271
102 (Option) Service Kit Plus – Double Knife 275
103 (Option) Stabilizer Wheels 279
104 (Option) Steel Finger Kit 283
105 (Option) Sunflower Attachment – Base Kit – Lean Bar and Deflectors 285
106 (Option) Sunflower Attachment – Base Kit – Pans and Supports 289
107 (Option) Sunflower Attachment – Deflector Kits 291
108 (Option) Sunflower Attachment – Pans 293
109 (Option) Upper Cross Auger – Two-Piece Auger (D225, D230, D235, and D241) 295
110 (Option) Upper Cross Auger – Three-Piece Auger (D245) 301
111 (Option) VertiBlade™ Vertical Knife Kit 307
112 (Option) VertiBlade™ Vertical Knife Components 311
113 (Option) VertiBlade™ Vertical Knife Hydraulics 317
114 Frame Components – Float Module 321
115 Pump, Gearbox, and Input Drive 323
116 Pump Assembly 325
117 Integrated Pump – Service Parts 327
118 Gearbox Assembly 331
119 Input Drive Assembly 335
120 Input Driveline and Support 339
121 Input Driveline and Support – High Angle 341
122 Input Driveline Conversion Kits 345
123 Auger Drum and Internal Components 347
124 Auger Assembly – Right Arm 349
125 Auger Assembly – Left Arm 353
126 Auger – Float Linkage 357

127 Auger Completion 359
128 Auger Conversion Kits – Fingers and Flighting 361
129 Auger – Crop Deflector Kits 365
130 Auger – Grease Lines 367
131 Float Linkage and Float Setting and Measuring 369
132 Float Springs 373
133 Float Module Attaching and Filler Components – FM200 to D2 Series 375
134 Feed Deck – Frame, Pivot Pins, and Front Support 379
135 Feed Deck – Draper 381
136 Feed Deck – Drive/Idler Roller and Tensioner 383
137 Feed Deck – Pans and Fillers 387
138 Hydraulics – Center-Link and Header Tilt / Reel Fore-Aft 391
139 Hydraulics – Feed Deck 395
140 Hydraulics – Suction and Return 397
141 Hydraulics – Float Module to Header Manifold 399
142 Electrical – Base 401
143 Electrical – FM200 to Combine Cab 403
144 Decals and Reflectors – FM200 405
145 New Holland CR Wide – Float Module Completion 407
146 New Holland CR Wide – Hydraulic/Electrical Completion 409
147 New Holland 10 Volt Auto Header Height Control Adapter Kit 413
148 (Option) Extended Center Filler 415
149 (Option) FM200 Fillers and Links 417
150 (Option) Hillside Extension 419
151 (Option) Stripper Bars 421
Index 424

1 Header Frame End Panels

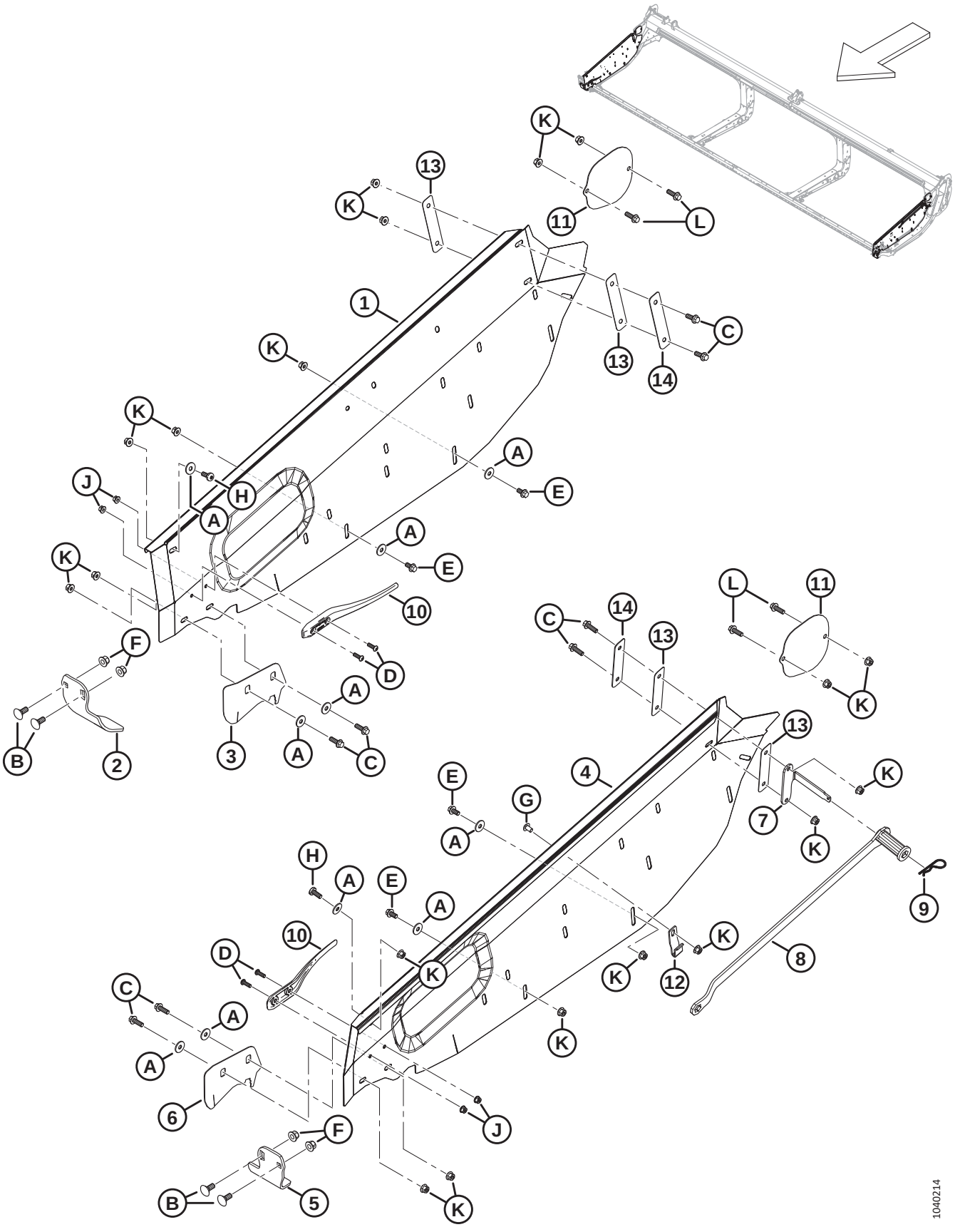

HEADER FRAME END PANELS

Ref	Part Number	Description	Qty	Serial Number
1	MAC360749	END PANEL – RH	1	
2	MAC289358	GUARD – RH KNIFE HEAD	1	
3	MAC360751	COVER – RH KNIFE OPENING [1]	1	
4	MAC360748	END PANEL – LH	1	
5	MAC289220	GUARD – LH KNIFE HEAD	1	
6	MAC360750	COVER – LH KNIFE OPENING [1]	1	
7	MAC340122	BRACKET – WRENCH HOLDER	1	
8	MAC360361	TOOL – HEADER ADJUSTER WELDT [2]	1	
9	MAC13125	PIN – HAIR	1	
10	MAC289742	DEFLECTOR – FINGER	2	
11	MAC289261	SHIELD – UCA COVER	2	
12	MAC340113	RETAINER – WRENCH FRONT	1	
13	MAC340193	INSULATOR – HEADER PANELS	4	
14	MAC340215	PLATE	2	
A	MAC184712	WASHER – FLAT LARGE M10-200HV		
B	MAC184667	BOLT – RHSN M12 X 1.75 X 30-8.8-ZINC		
C	MAC184665	BOLT – HEX FLG HD M10 X 1.5 X 30-10.9-AA1J		
D	MAC184649	SCREW – HEX SOC BTN HD M8 X 1.25 X 25		
E	MAC152655	BOLT – HEX FLG HD M10 X 1.5 X 20-8.8-AA1J		
F	MAC136431	NUT – HEX FLG CTR LOC M12 X 1.75-10		
G	MAC136640	SCREW – TORX TRUSS HD M10 X 1.5 X 16 X SPCL-8.8-AA1J		
H	MAC320304	SCREW – TORX TRUSS HD M10 X 1.5 X 25-SPCL-8.8-ZINC		
J	MAC135337	NUT – HEX FLG CTR LK M8 X 1.25-8-AA1J		
K	MAC135799	NUT – HEX FLG CTR LOC M10 X 1.5-10		
L	MAC184661	BOLT – HEX HD TFL M10 X 1.5 X 30-8.8-AA1J		

1. Not recommended in all conditions. Used primarily in rice and fine grasses to keep crop from getting caught in the delivery opening.
2. Kit includes header adjuster tool (NSS) and instructions.

2 Header Frame – Split Frame Hardware

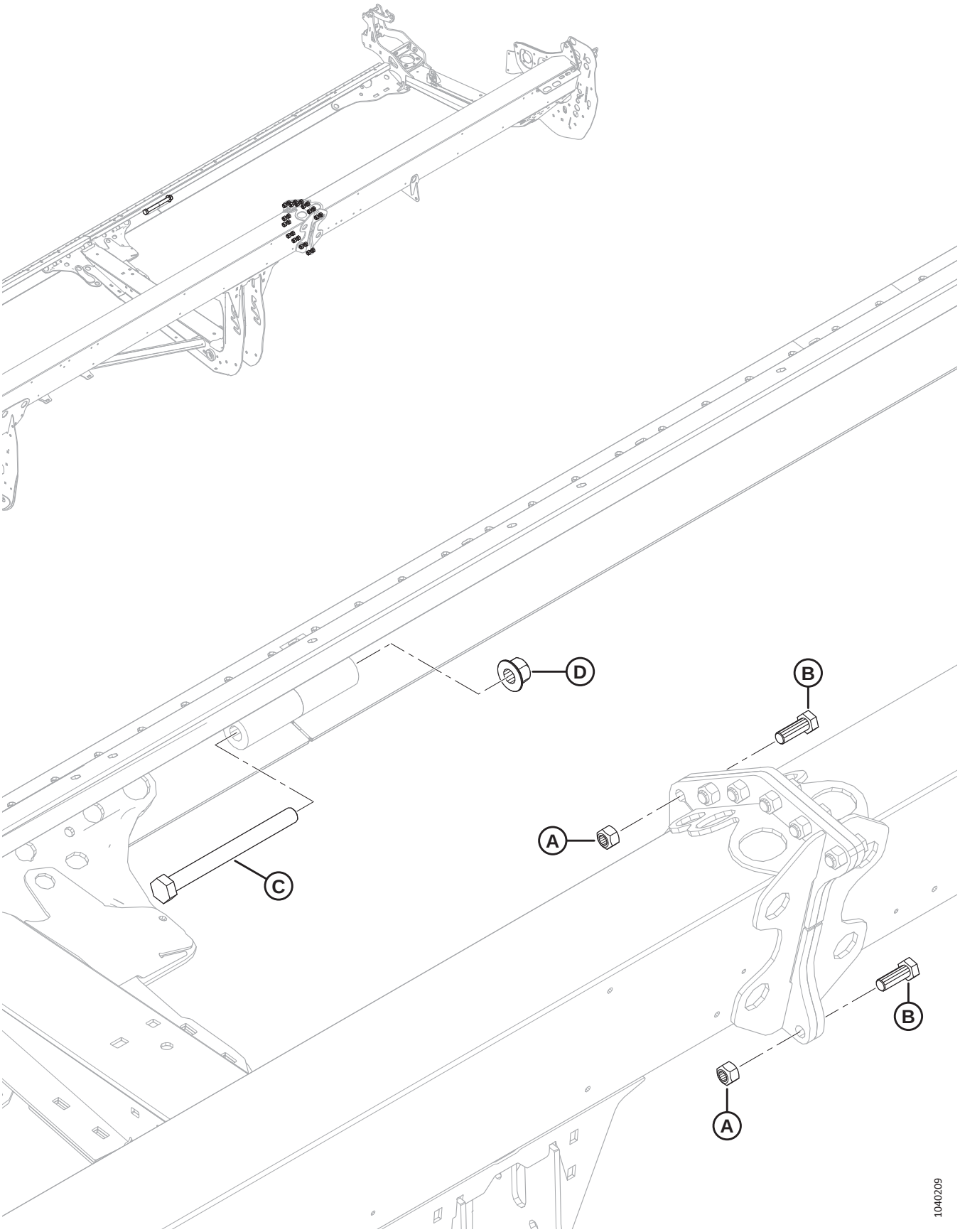

HEADER FRAME – SPLIT FRAME HARDWARE

Ref	Part Number	Description	Qty	Serial Number
A	MAC320026	NUT – HEX TOP LOCK M16 X 2-10-ZINC		
B	MAC136671	BOLT – HEX HD M16 X 2 X 45-10.9-ZINC		
C	MAC252581	BOLT – HEX HD M20 X 2.5 X 220-10.9-AA1J		
D	MAC136122	NUT – HEX FLG CTR LOC M20 X 2.5-10-AA1J		

3 Manual Case and Knife Storage

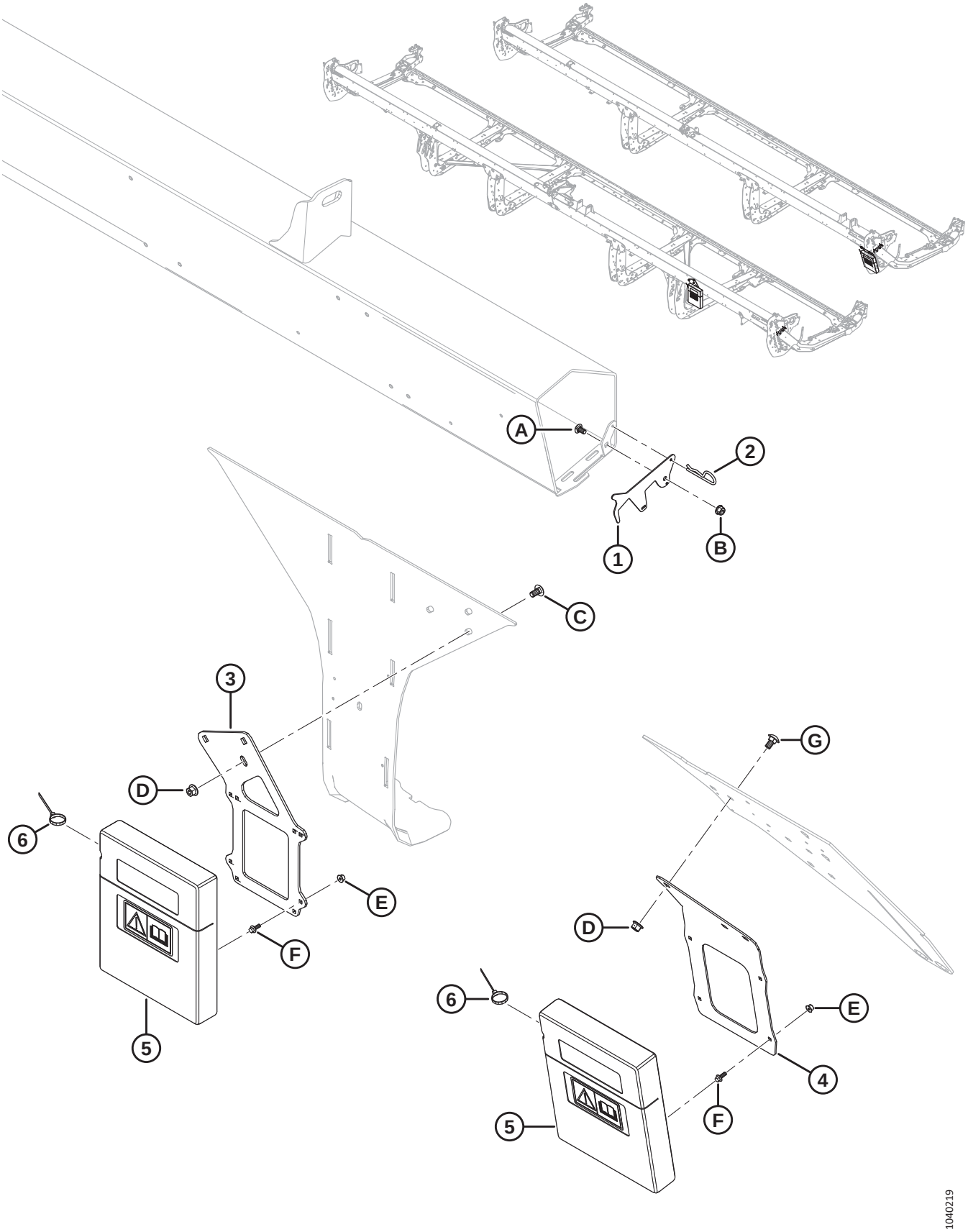

MANUAL CASE AND KNIFE STORAGE

Ref	Part Number	Description	Qty	Serial Number
1	MAC286741	LATCH – RETAINER, KNIFE STORAGE	1	
2	MAC13125	PIN – HAIR	1	
3	MAC360175	SUPPORT – MANUAL CASE (30–45 FT HEADERS) [3]	1	
4	MAC360166	SUPPORT – MANUAL CASE (25 FT HEADERS) [4]	1	
5	MAC174612	CASE – MANUAL	1	
6	MAC21763	FASTENER – CABLE TIE, BLACK	1	
A	MAC191489	BOLT – RHSSN TFL M8 X 1.25 X 16-8.8-AA1J		
B	MAC135337	NUT – HEX FLG CTR LK M8 X 1.25-8-AA1J		
C	MAC184657	BOLT – RHSSN M10 X 1.5 X 20-8.8-AA1J [3]		
D	MAC135799	NUT – HEX FLG CTR LOC M10 X 1.5-10		
E	MAC152668	NUT – HEX FLG CTR LOC M6 X 1-8		
F	MAC135959	BOLT – HEX FLG HD M6 X 1 X 16-10.9-AA1J		
G	MAC136178	BOLT – RHSN M10 X 1.5 X 20-8.8-AA1J [4]		

3. Used on D230, D235, D241, and D245 headers.
4. Used on D225 headers.

4 Float Module Transition Pan

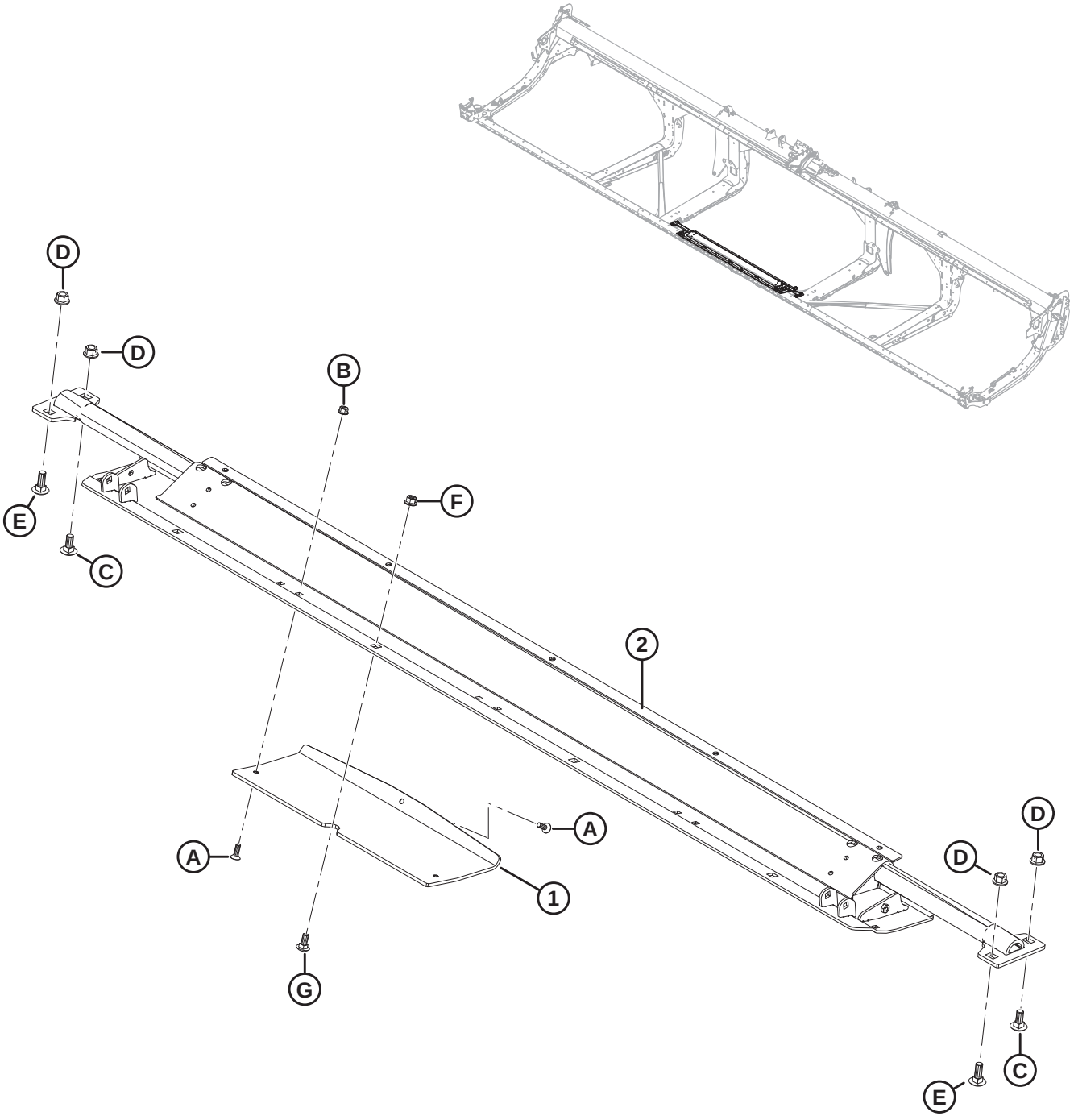

1040256

FLOAT MODULE TRANSITION PAN

Ref	Part Number	Description	Qty	Serial Number
1	MAC357797	SHOE – TRANSITION PAN SKID	4	
2	MAC301115	PAN – RIGID TRANSITION WELDT	1	
A	MAC136492	SCREW – HEX SOC CSK HD TFL M8 X 1.25 X 25-10.9-AA1J	12	
B	MAC135337	NUT – HEX FLG CTR LK M8 X 1.25-8-AA1J	8	
C	MAC184667	BOLT – RHSN M12 X 1.75 X 30-8.8-ZINC	2	
D	MAC136431	NUT – HEX FLG CTR LOC M12 X 1.75-10	4	
E	MAC136291	BOLT – RHSN TFL M12 X 1.75 X 35-8.8-ZINC	2	
F	MAC135799	NUT – HEX FLG CTR LOC M10 X 1.5-10	4	
G	MAC135785	BOLT – RHSN M10 X 1.5 X 25-8.8-AA1J	4	

5 Divider Cones

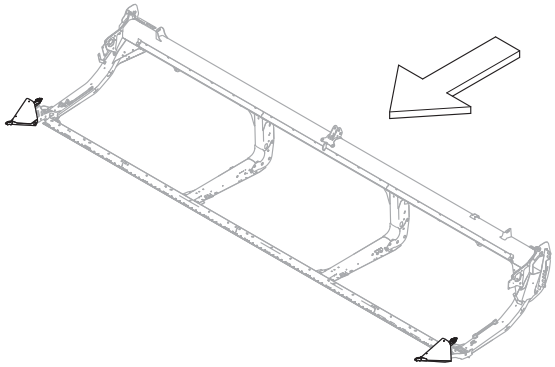

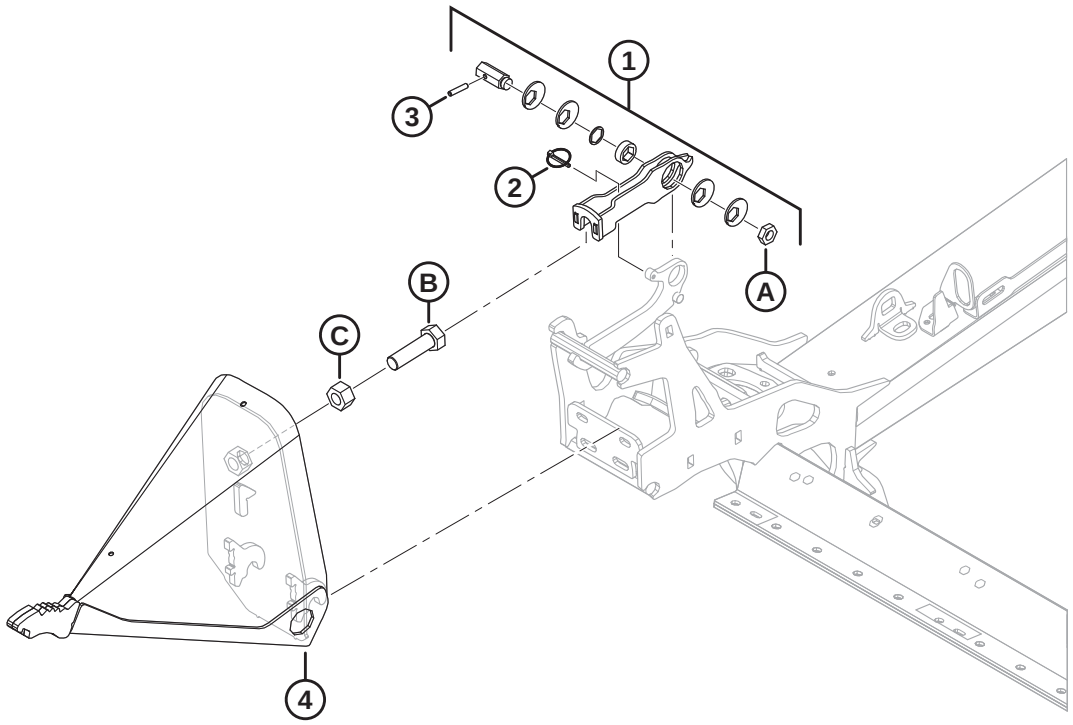

1032287

DIVIDER CONES

Ref	Part Number	Description	Qty	Serial Number
1	MAC313767	KIT – DIVIDER LATCH [5]	2	
2	MAC50193	PIN – LYNCH	2	
3	MAC16266	PIN – SPRING 1/4 DIA X 1.25 LG	2	
4	MAC289235	DIVIDER ASSEMBLY – LH [6]	1	
	MAC289359	DIVIDER ASSEMBLY – RH [6]	1	
A	MAC320218	NUT – HEX THIN M16 X 2-SPCL-5-ZINC		
B	MAC136339	BOLT – HEX HD FINE TFL M20 X 1.5 X 70 X 8.8-ZINC		
C	MAC136342	NUT – HEX FINE M20 X 1.5 X 10-AA3L		

5. The Divider Latch Kit includes latch (NSS), lynch pin (MAC50193), spring pin (MAC16266), eccentric disc (NSS), bushing (NSS), hexagonal shaft (NSS), shim (NSS), latch (NSS), decals (MAC289762, MAC289763), and nut (MAC320218). For decals, refer to Section *80 Decals and Reflectors – D2 Series, page 215*.
6. Includes bolt (MAC136339) and nut (MAC136342).

6 Divider Rods and Storage

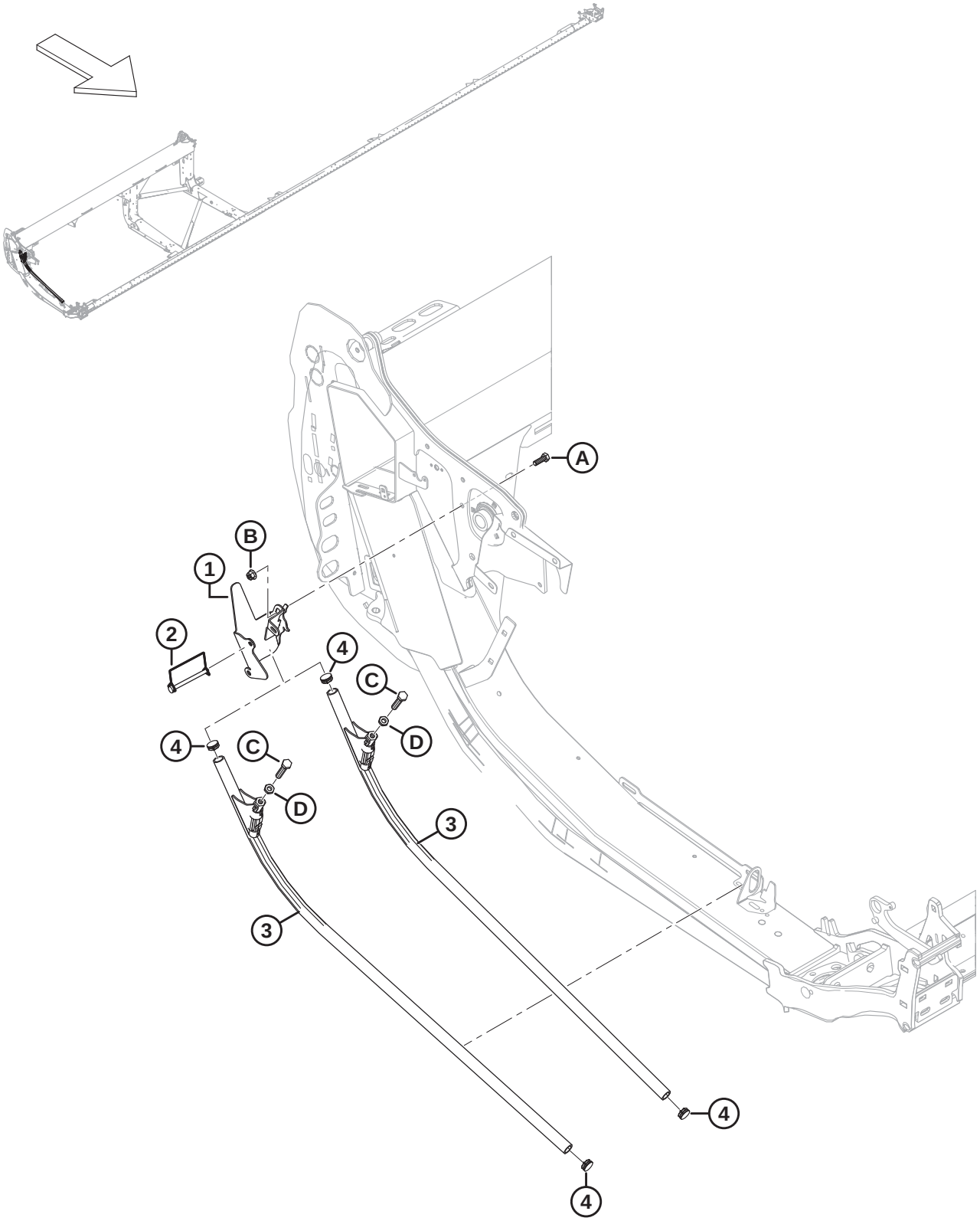

1038599

DIVIDER RODS AND STORAGE

Ref	Part Number	Description	Qty	Serial Number
1	MAC360127	SUPPORT WELDT – ROD STORAGE	1	
2	MAC136749	PIN – LYNCH	1	
3	MAC289654	DIVIDER – ROD ASSY [7]	2	
4	MAC335301	PLUG – PLASTIC, SNAP-IN	2	
A	MAC184661	BOLT – HEX HD TFL M10 X 1.5 X 30-8.8-AA1J		
B	MAC135799	NUT – HEX FLG CTR LOC M10 X 1.5-10		
C	MAC252541	BOLT – HEX HD TFL M12 X 1.75 X 65-8.8-AA3L		
D	MAC184696	NUT – HEX THIN M12 X 1.75-05-AA1J		

7. Includes bolt (MAC252541), nut (MAC184696), and two plugs (MAC335301).

7 Endshields – New Holland

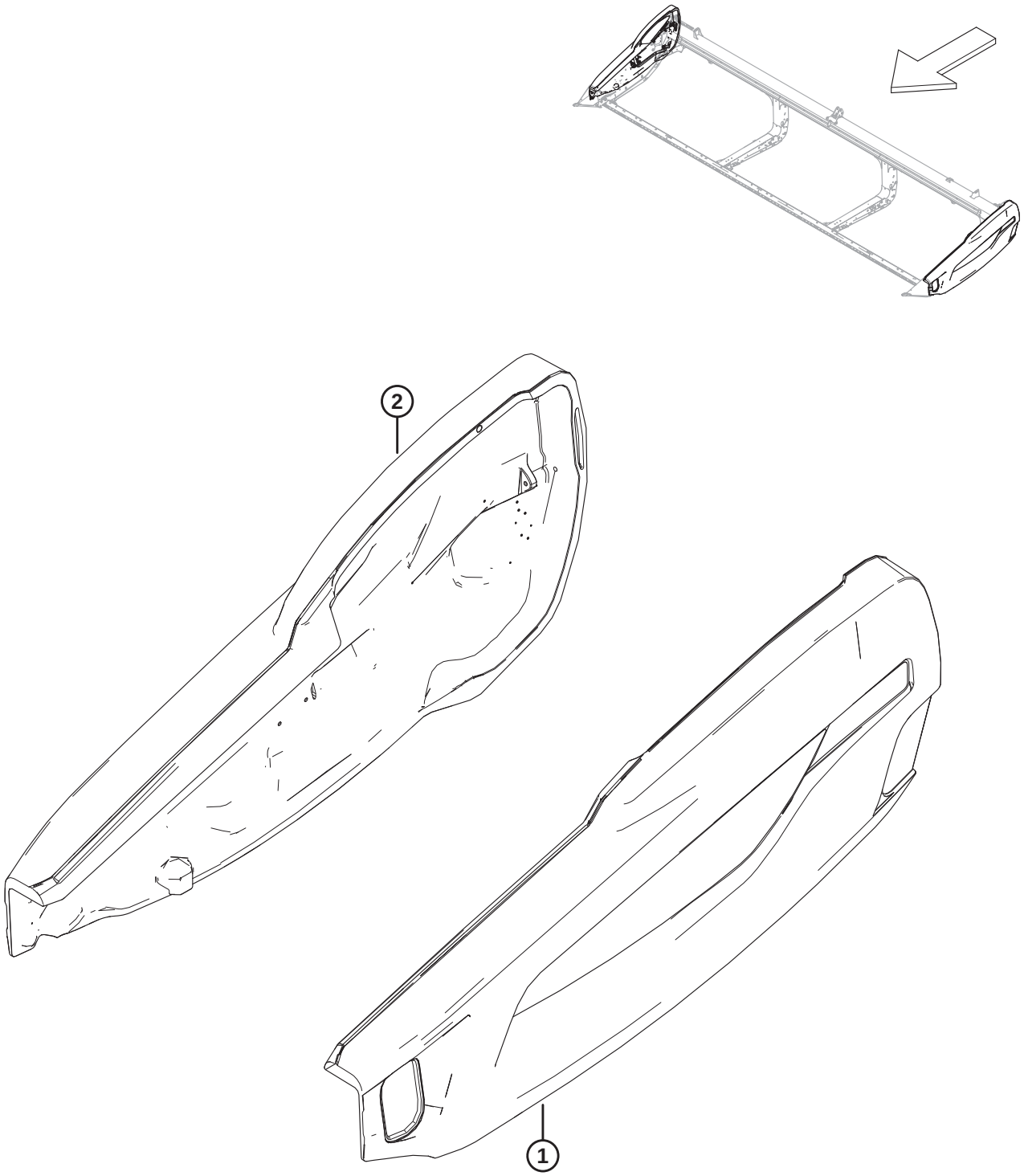

1039650

Ref	Part Number	Description	Qty	Serial Number
1	MAC360553	SHIELD ASSY – NH YELLOW, LH [8]	1	
2	MAC360449	SHIELD ASSY – NH YELLOW, RH [8]	1	
	MAC165524	REFLECTOR – RED, 230 MM [9]		

8. Refer to Section *81 Decals – Product Identification, New Holland, page 217* for product identification decals.
9. Refer to Section *80 Decals and Reflectors – D2 Series, page 215*. This reflector is used on the right endshield only.

8 Endshield Mount Components

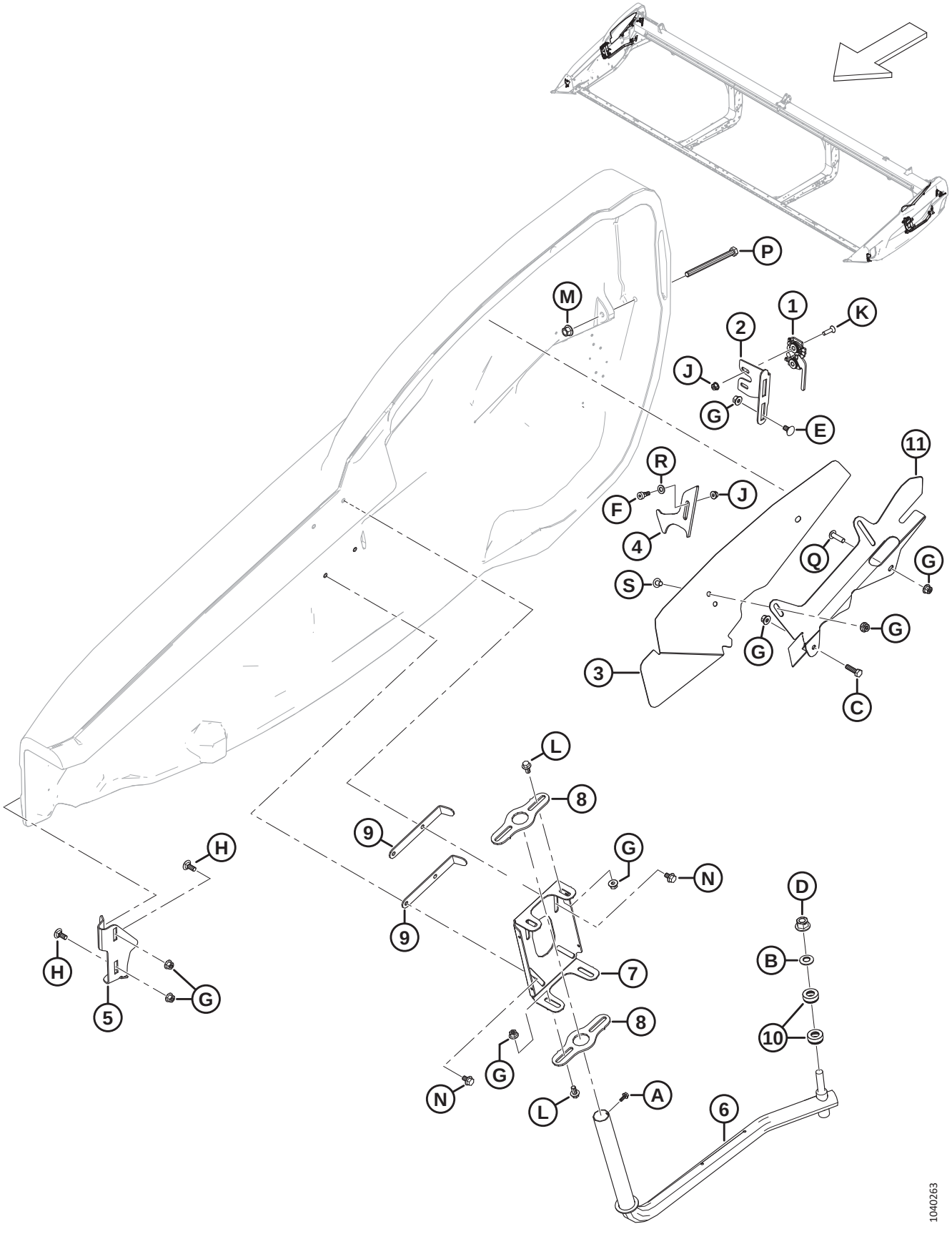

ENDSHIELD MOUNT COMPONENTS

Ref	Part Number	Description	Qty	Serial Number
1	MAC289925	LATCH – RH 2 STAGE	1	
	MAC289924	LATCH – LH 2 STAGE	1	
2	MAC289621	SUPPORT – RH LATCH	1	
	MAC289618	SUPPORT – LH LATCH	1	
3	MAC360379	SHIELD – RH NECK	1	
	MAC360378	SHIELD – LH NECK	1	
4	MAC360798	LATCH – RH	1	
	MAC360797	LATCH – LH	1	
5	MAC289483	SUPPORT – RH FRONT	1	
	MAC289380	SUPPORT – LH FRONT	1	
6	MAC289439	ARM – RH WELDT	1	
	MAC289375	ARM – LH WELDT	1	
7	MAC313432	PIVOT – SHIELD RH	1	
	MAC313303	PIVOT – SHIELD LH	1	
8	MAC313304	PIVOT	4	
9	MAC313783	RETAINER	4	
10	MAC289487	BEARING – THRUST	4	
11	MAC360375	SUPPORT – RH NECK SHIELD	1	
	MAC360374	SUPPORT – LH NECK SHIELD	1	
A	MAC252284	SCREW – HEX WSHR HD M6 X 1 X 16-450HV		
B	MAC184718	WASHER – CON SPRING M16 STL SAE 1050-1075		
C	MAC30628	BOLT – HEX HD M10 X 1.5 X 35-8.8-AA1J		
D	MAC136736	NUT – HEX FLG TOP LOCK M16 X 1.5-10-AA2L		
E	MAC136178	BOLT – RHSN M10 X 1.5 X 20-8.8-AA1J		
F	MAC135894	SCREW – HEX SOC HD SHLDR M10		
G	MAC135799	NUT – HEX FLG CTR LOC M10 X 1.5-10		
H	MAC135785	BOLT – RHSN M10 X 1.5 X 25-8.8-AA1J		
J	MAC135337	NUT – HEX FLG CTR LK M8 X 1.25-8-AA1J		
K	MAC135336	SCREW – CSK MCH M8 X 1.25 X 30 GR5 AA1J		
L	MAC152655	BOLT – HEX FLG HD M10 X 1.5 X 20-8.8-AA1J		
M	MAC136431	NUT – HEX FLG CTR LOC M12 X 1.75-10		
N	MAC136231	BOLT – HEX SER FLG HD M10 X 1.5 X 16 X SPCL-8.8		

ENDSHIELD MOUNT COMPONENTS

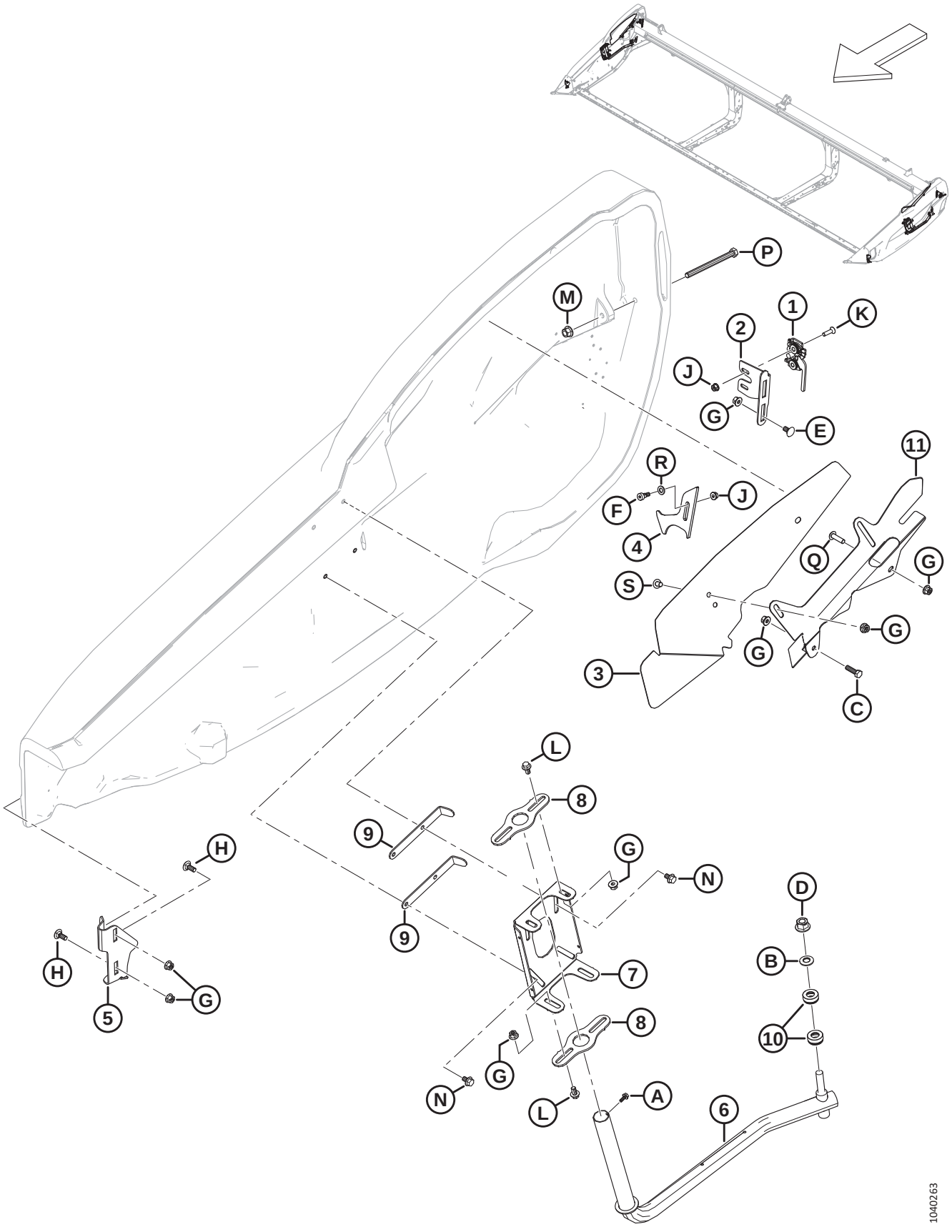

ENDSHIELD MOUNT COMPONENTS

Ref	Part Number	Description	Qty	Serial Number
P	MAC135696	BOLT – HEX HD M12 X 1.75 X 150-8.8-AA1J		
Q	MAC320327	SCREW – TORX TRUSS HD M10 X 1.5 X 35-SPCL-8.8-ZINC		
R	MAC184711	WASHER – FLAT REG M10-200HV-AA1J		
S	MAC136640	SCREW – TORX TRUSS HD M10 X 1.5 X 16 X SPCL-8.8-AA1J		

9 Draper

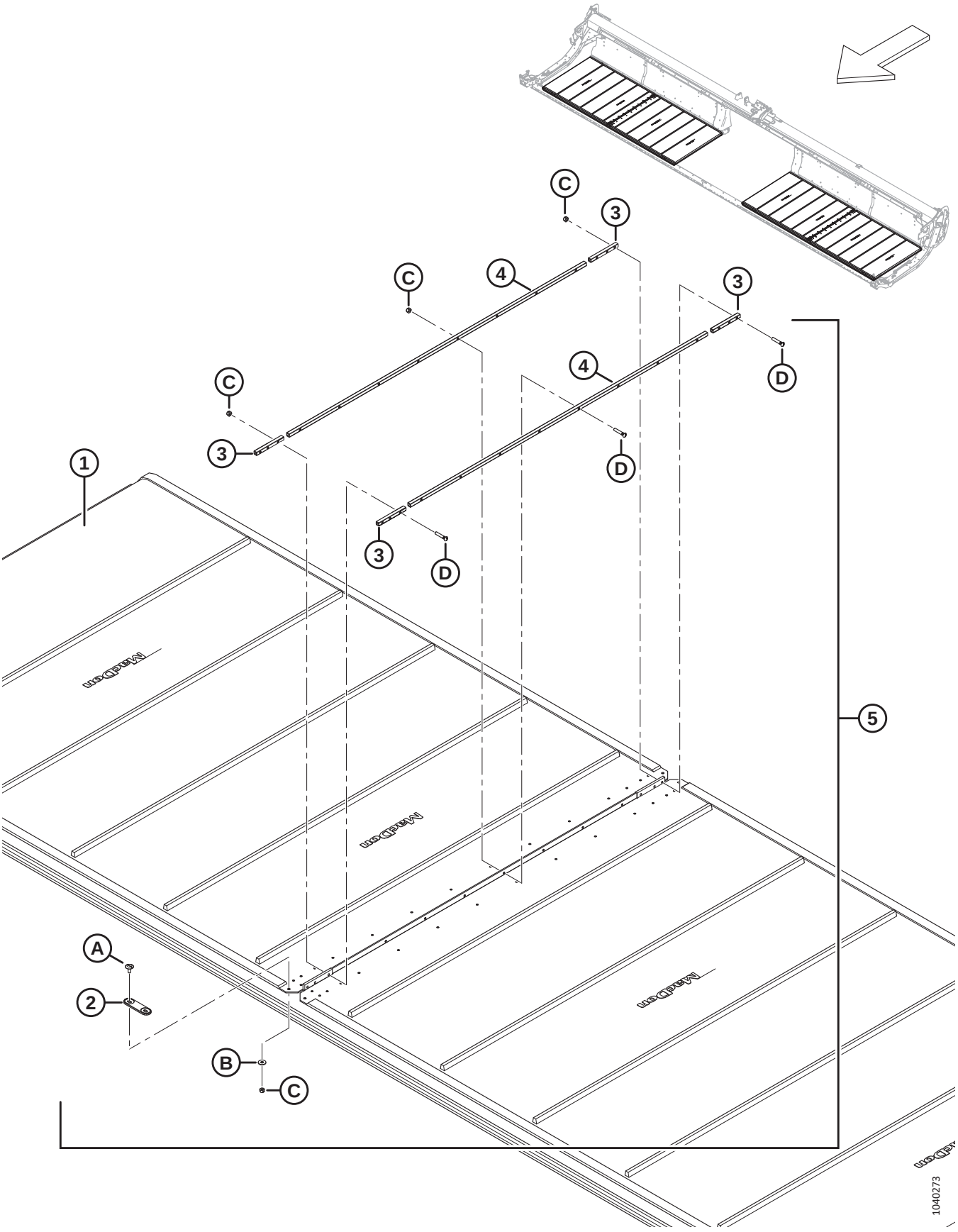

Ref	Part Number	Description	Qty	Serial Number
1	MAC319098	KIT – DRAPER 25 FT, 50 INCH WIDE [10]	2	
	MAC319099	KIT – DRAPER 30 FT, 50 INCH WIDE [10]	2	
	MAC319100	KIT – DRAPER 35 FT, 50 INCH WIDE [10]	2	
	MAC319102	KIT – DRAPER 41 FT, 50 INCH WIDE [10]	2	
	MAC319103	KIT – DRAPER 45 FT, 50 INCH WIDE [10]	2	
	MAC319105	KIT – DRAPER REPAIR 50 INCH, 500 MM (19.7 IN.) LG [11]	A/R	
	MAC319540	KIT – BULK DRAPER 50 IN. [12]	OPT	
2	MAC319662	CONNECTOR – BRIDGE	2	
3	NSS	BAR – CONNECTOR DRAPER HEM [13]	8	
	MAC319347	KIT – DRAPER CONNECTOR 50 INCH, HEM [14]	A/R	
4	NSS	BAR – CONNECTOR DRAPER CENTER [15]	4	
	MAC319346	KIT – DRAPER CONNECTOR 50 INCH, CENTER [16]	A/R	
5	MAC319095	KIT – DRAPER CONNECTOR 50 INCH [17]	2	
A	MAC320148	SCREW – TRUSS SLT HD M6 X 1.0 16-SPCL-8.8-ZINC		
B	MAC184706	WASHER – FLAT LARGE M6-200HV		
C	MAC286479	NUT – CTR LOC CSK M6 X 1 50PK [18]		
D	MAC319345	KIT – SCREW M6 X 34 C/W NUT 30PK [19]		

10. The kit includes draper (NSS) and draper connector kit (MAC319095).
11. The kit includes draper repair piece (NSS) and two draper connector kits (MAC319095).
12. The kit includes a bulk draper roll and instructions.
13. Not sold separately (NSS). Order either the draper hem connector kit (MAC319347) or the draper connector kit (MAC319095).
14. The kit includes two draper hem connector bars (NSS) and hardware (MAC226259 and MAC320240).
15. Not sold separately (NSS). Order either the draper center connector kit (MAC319346) or the draper connector kit (MAC319095).
16. The kit includes two draper center connector bars (NSS) and hardware (MAC226259 and MAC320240).
17. One kit per side; Includes two draper center connector bars (NSS), four draper hem connector bars (NSS), bridge connector (MAC319662), and hardware.
18. The kit includes 50 nuts.
19. The kit includes 30 screws and 30 nuts.

10 Draper – Backsheet Panels (D225)

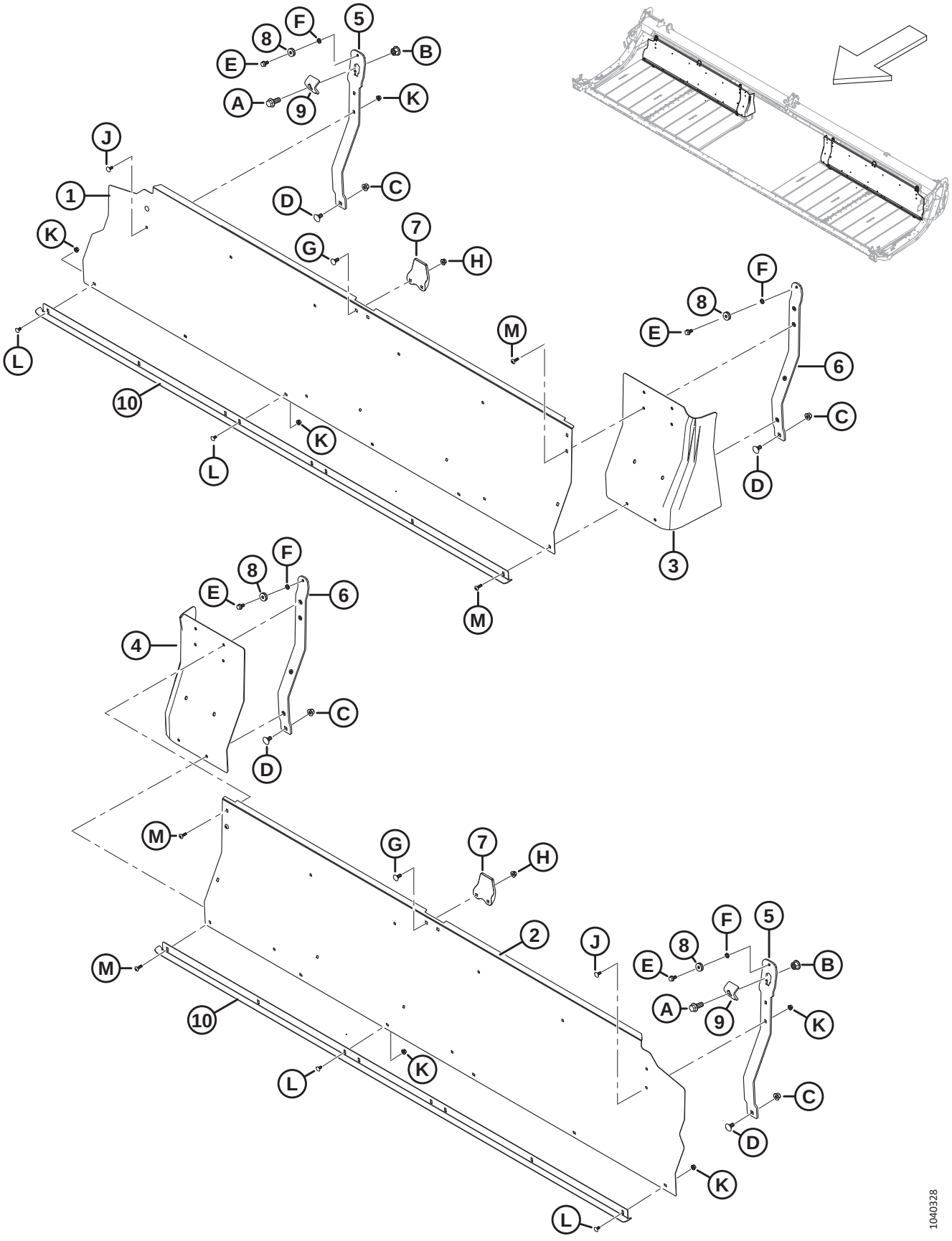

DRAPER – BACKSHEET PANELS (D225)

Ref	Part Number	Description	Qty	Serial Number
1	MAC275405	PANEL – BACKSHEET 25 FT RH	1	
2	MAC275404	PANEL – BACKSHEET 25 FT LH	1	
3	MAC319223	EXTENSION – BACKSHEET RH	1	
4	MAC319222	EXTENSION – BACKSHEET LH	1	
5	MAC275941	SUPPORT – DECK OUTBOARD, RIGID	2	
6	MAC275938	SUPPORT – INBOARD RIGID DECK ASSY [20]	2	
7	MAC145840	GUIDE – BACKSHEET	2	
8	MAC18867	BEARING – BALL CYL OD C/W TWO SEALS	4	
9	MAC145558	CLAMP – DECK SHIFT	2	
10	MAC319721	DEFLECTOR – 25FT	2	
A	MAC320060	BOLT – HEX FLG HD TFL M16 X 2 X 40-10.9-ZINC		
B	MAC136440	NUT – HEX FLG CTR LK M16 X 2-10-AA1J		
C	MAC136431	NUT – HEX FLG CTR LOC M12 X 1.75-10		
D	MAC135903	BOLT – RHSN M12 X 1.75 X 25-8.8-ZINC		
E	MAC101897	SCREW – HEX WASH HD 3/8 NC X 3/4		
F	MAC18637	WASHER – REG. LOCK 3/8 IN. NOM. I.D.		
G	MAC135785	BOLT – RHSN M10 X 1.5 X 25-8.8-AA1J		
H	MAC135799	NUT – HEX FLG CTR LOC M10 X 1.5-10		
J	MAC197171	BOLT – RHSN M8 X 1.25 X 20-8.8-ZINC		
K	MAC135337	NUT – HEX FLG CTR LK M8 X 1.25-8-AA1J		
L	MAC191489	BOLT – RHSSN TFL M8 X 1.25 X 16-8.8-AA1J		
M	MAC320290	SCREW – TORX TRUSS HD M8 X 1.25 X 25-SPCL-8.8-ZINC		

20. Includes four rivnuts (MAC320181).

11 Draper – Backsheet Panels (D230 and D235)

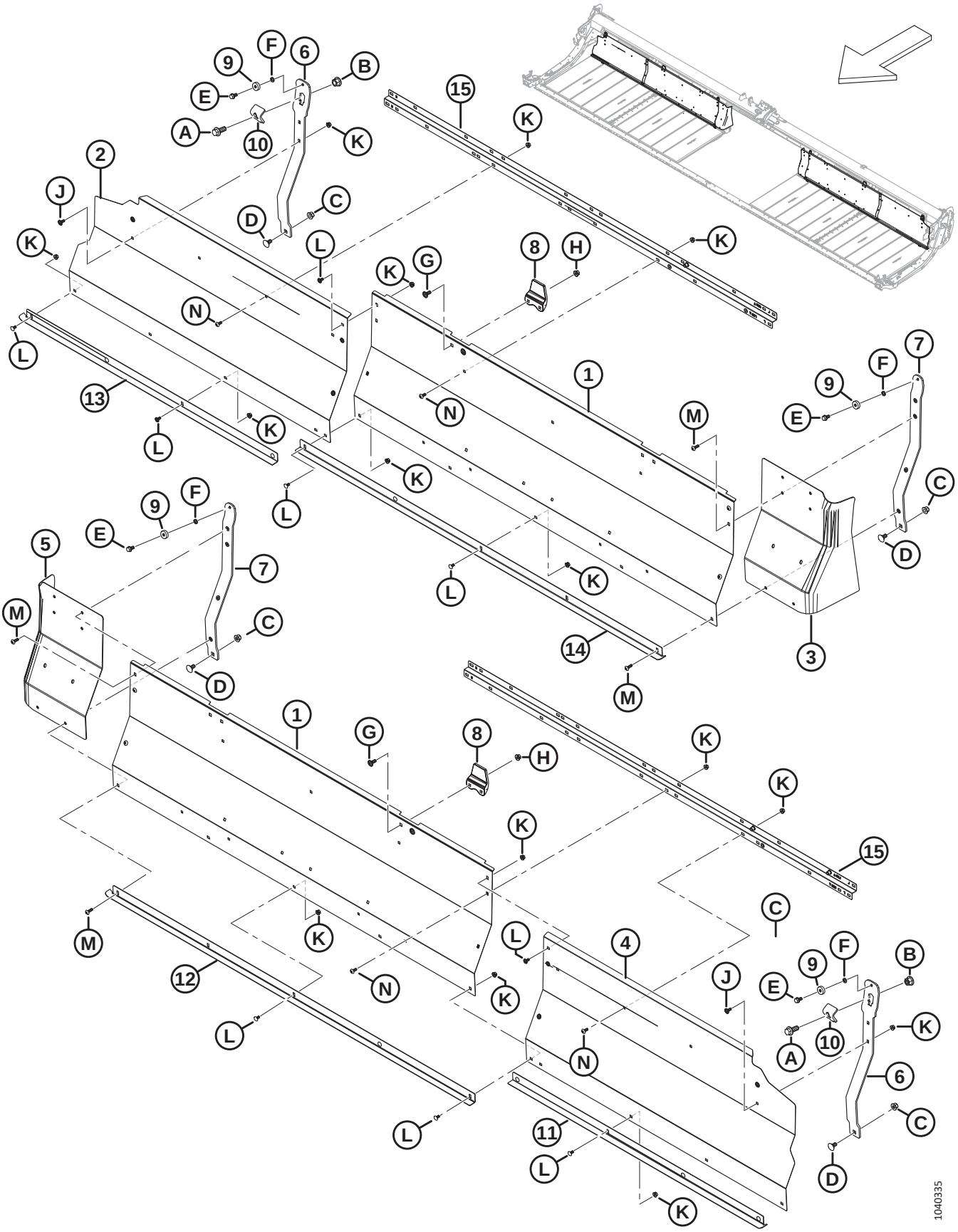

DRAPER – BACKSHEET PANELS (D230 AND D235)

Ref	Part Number	Description	Qty	Serial Number
1	MAC275837	PANEL – BACKSHEET 30, 35, 41 FT INNER	2	
2	MAC275461	PANEL – BACKSHEET 30 FT RH OUTER	1	
	MAC275320	PANEL – BACKSHEET 35 FT RH OUTER	1	
3	MAC319223	EXTENSION – BACKSHEET RH	1	
4	MAC275460	PANEL – BACKSHEET 30 FT LH OUTER	1	
	MAC275319	PANEL – BACKSHEET 35 FT LH OUTER	1	
5	MAC319222	EXTENSION – BACKSHEET LH	1	
6	MAC275941	SUPPORT – DECK OUTBOARD, RIGID	2	
7	MAC275938	SUPPORT – INBOARD RIGID DECK ASSY [21]	2	
8	MAC145840	GUIDE – BACKSHEET	2	
9	MAC18867	BEARING – BALL CYL OD C/W TWO SEALS	4	
10	MAC145558	CLAMP – DECK SHIFT	2	
11	MAC319722	DEFLECTOR – LH, 30 FT	1	
	MAC319724	DEFLECTOR – LH, 35 FT	1	
12	MAC319715	DEFLECTOR – LH INBOARD, 30–41 FT	1	
13	MAC319723	DEFLECTOR – RH, 30 FT	1	
	MAC319725	DEFLECTOR – RH, 35 FT	1	
14	MAC319716	DEFLECTOR – RH INBOARD, 30–41 FT	1	
15	MAC360509	SUPPORT – BACKSHEET	2	
A	MAC320060	BOLT – HEX FLG HD TFL M16 X 2 X 40-10.9-ZINC		
B	MAC136440	NUT – HEX FLG CTR LK M16 X 2-10-AA1J		
C	MAC136431	NUT – HEX FLG CTR LOC M12 X 1.75-10		
D	MAC135903	BOLT – RHSN M12 X 1.75 X 25-8.8-ZINC		
E	MAC101897	SCREW – HEX WASH HD 3/8 NC X 3/4		
F	MAC18637	WASHER – REG. LOCK 3/8 IN. NOM. I.D.		
G	MAC135785	BOLT – RHSN M10 X 1.5 X 25-8.8-AA1J		
H	MAC135799	NUT – HEX FLG CTR LOC M10 X 1.5-10		
J	MAC197171	BOLT – RHSN M8 X 1.25 X 20-8.8-ZINC		
K	MAC135337	NUT – HEX FLG CTR LK M8 X 1.25-8-AA1J		

21. Includes four rivnuts (MAC320181).

DRAPER – BACKSHEET PANELS (D230 AND D235)

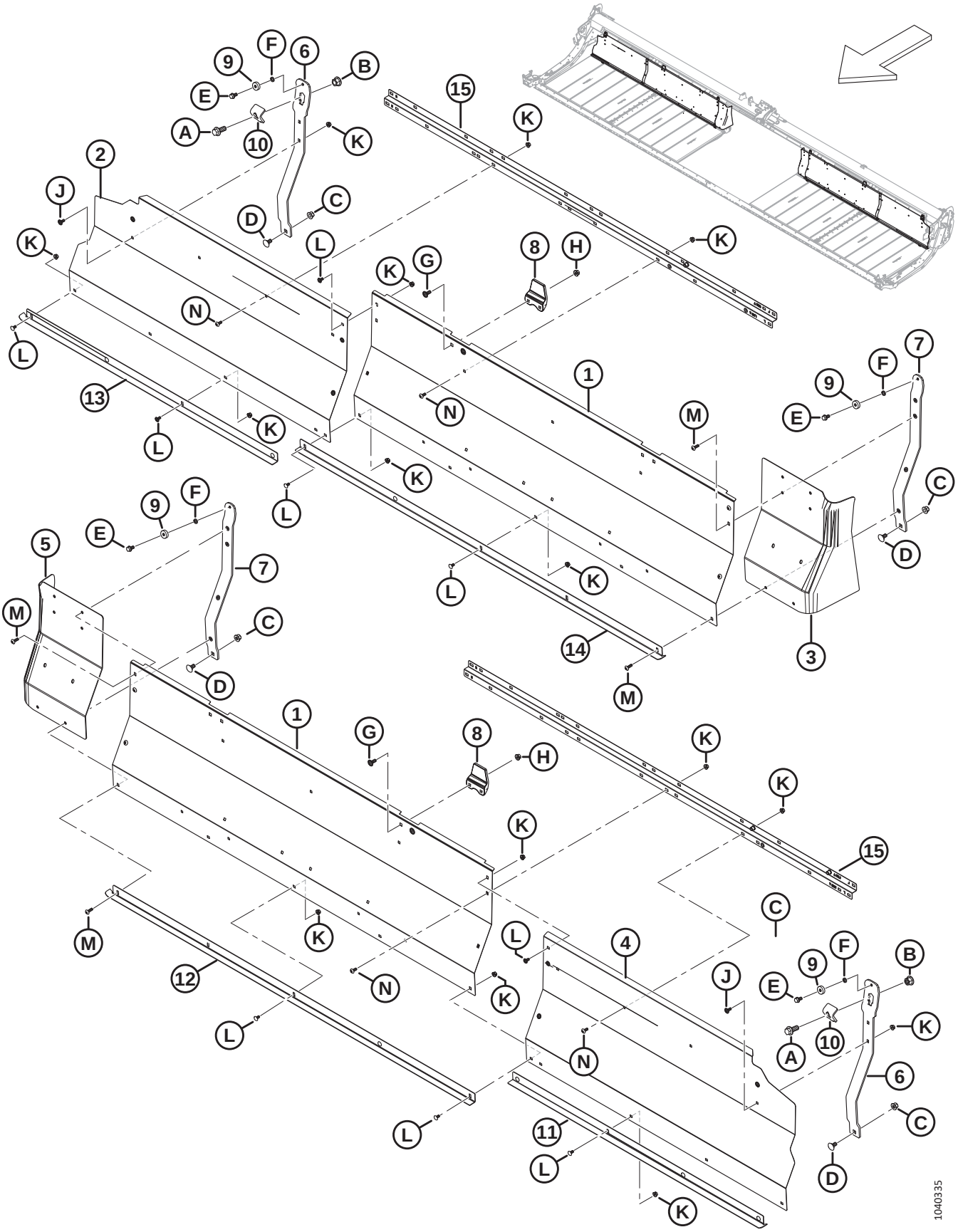

Ref	Part Number	Description	Qty	Serial Number
L	MAC191489	BOLT – RHSSN TFL M8 X 1.25 X 16-8.8-AA1J		
M	MAC320290	SCREW – TORX TRUSS HD M8 X 1.25 X 25-SPCL-8.8-ZINC		
N	MAC320190	SCREW – TORX TRUSS HD M8 X 1.25 X 20-SPCL-8.8-ZINC		

12 Draper – Backsheet Panels (D241)

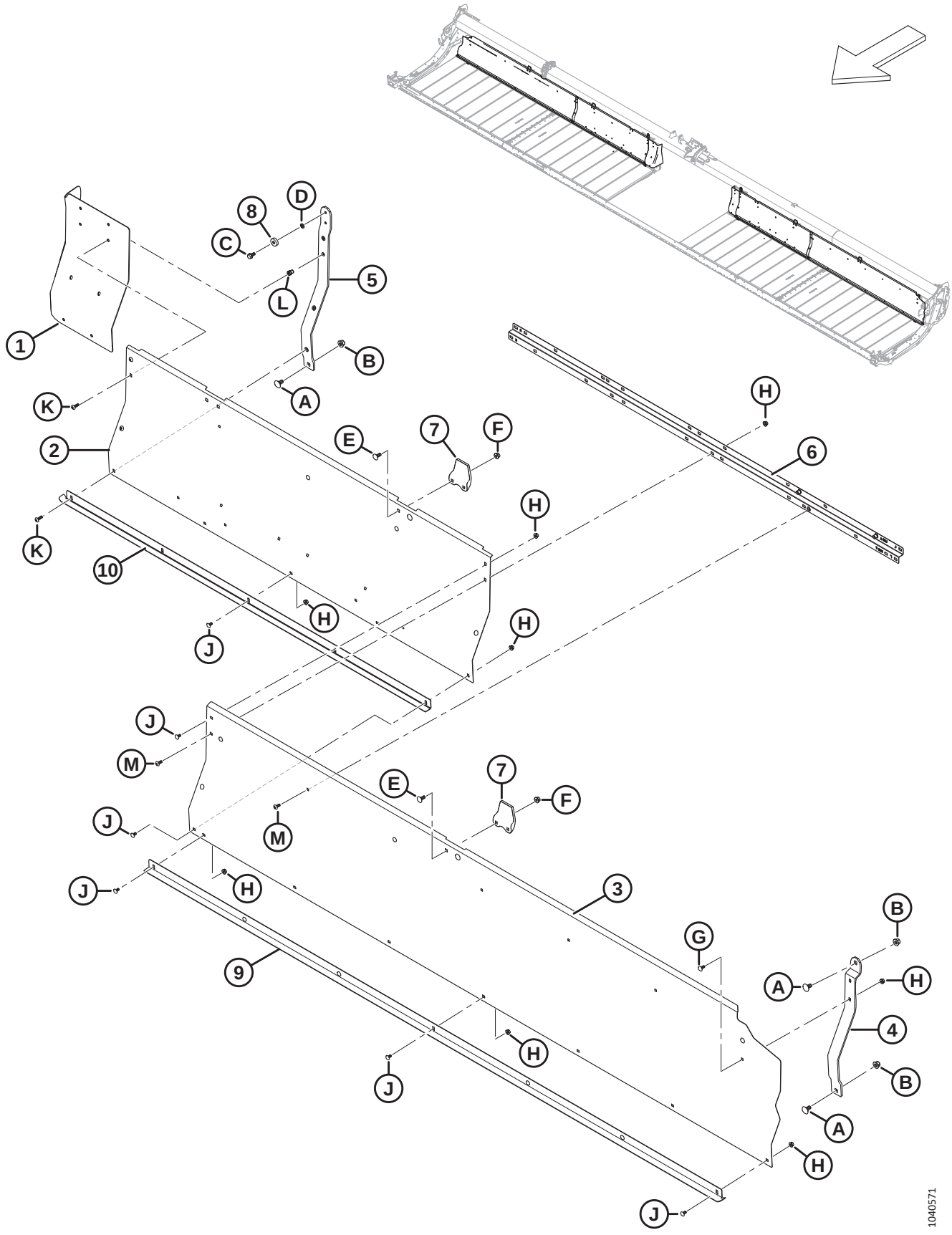

DRAPER – BACKSHEET PANELS (D241)

Ref	Part Number	Description	Qty	Serial Number
1	MAC319222	EXTENSION – BACKSHEET LH	1	
	MAC319223	EXTENSION – BACKSHEET RH	1	
2	MAC275837	PANEL – BACKSHEET 30, 35, 41 FT INNER	2	
3	MAC275484	PANEL – BACKSHEET 41 FT LH OUTER	1	
	MAC275483	PANEL – BACKSHEET 41 FT RH OUTER	1	
4	MAC275675	SUPPORT – DECK	2	
5	MAC319366	SUPPORT – DECK FLEX INBOARD [22]	2	
6	MAC360509	SUPPORT – BACKSHEET	2	
7	MAC145840	GUIDE – BACKSHEET	4	
8	MAC18867	BEARING – BALL CYL OD C/W TWO SEALS	2	
9	MAC319726	DEFLECTOR – LH, 41 FT	1	
	MAC319727	DEFLECTOR – RH, 41 FT	1	
10	MAC319715	DEFLECTOR – LH INBOARD, 30–41 FT	1	
	MAC319716	DEFLECTOR – RH INBOARD, 30–41 FT	1	
A	MAC135903	BOLT – RHSN M12 X 1.75 X 25-8.8-ZINC		
B	MAC136431	NUT – HEX FLG CTR LOC M12 X 1.75-10		
C	MAC101897	SCREW – HEX WASH HD 3/8 NC X 3/4		
D	MAC18637	WASHER – REG. LOCK 3/8 IN. NOM. I.D.		
E	MAC135785	BOLT – RHSN M10 X 1.5 X 25-8.8-AA1J		
F	MAC135799	NUT – HEX FLG CTR LOC M10 X 1.5-10		
G	MAC197171	BOLT – RHSN M8 X 1.25 X 20-8.8-ZINC		
H	MAC135337	NUT – HEX FLG CTR LK M8 X 1.25-8-AA1J		
J	MAC191489	BOLT – RHSSN TFL M8 X 1.25 X 16-8.8-AA1J		
K	MAC320290	SCREW – TORX TRUSS HD M8 X 1.25 X 25-SPCL-8.8-ZINC		
L	MAC320181	RIVNUT – M8 X 1.25 HEX 3.8-7.9		
M	MAC320190	SCREW – TORX TRUSS HD M8 X 1.25 X 20-SPCL-8.8-ZINC		

22. The kit includes inboard flex deck support assembly (NSS) and screw (MAC101897).

13 Draper – Backsheet Panels (D245)

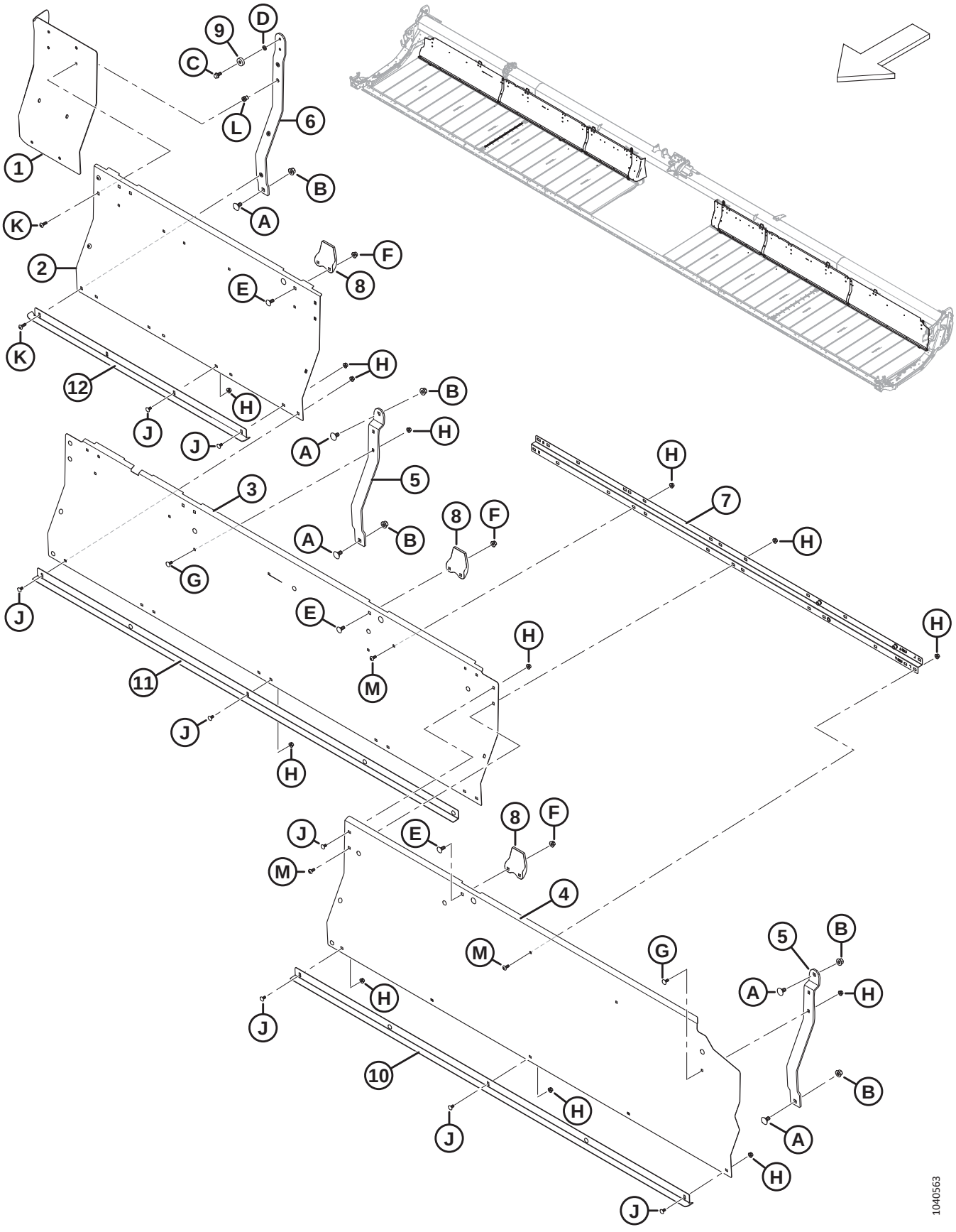

DRAPER – BACKSHEET PANELS (D245)

Ref	Part Number	Description	Qty	Serial Number
1	MAC319222	EXTENSION – BACKSHEET LH	1	
	MAC319223	EXTENSION – BACKSHEET RH	1	
2	MAC275965	PANEL – BACKSHEET LH/RH INBOARD	2	
3	MAC275676	PANEL – BACKSHEET LH/RH MIDDLE	2	
4	MAC275319	PANEL – BACKSHEET 45 FT LH OUTER	1	
	MAC275320	PANEL – BACKSHEET 45 FT RH OUTER	1	
5	MAC275675	SUPPORT – DECK	4	
6	MAC319366	SUPPORT – DECK FLEX INBOARD [23]	2	
7	MAC360509	SUPPORT – BACKSHEET	2	
8	MAC145840	GUIDE – BACKSHEET	6	
9	MAC18867	BEARING – BALL CYL OD C/W TWO SEALS	2	
10	MAC319724	DEFLECTOR – LH, 45 FT	1	
	MAC319725	DEFLECTOR – RH, 45 FT	1	
11	MAC319718	DEFLECTOR – MIDDLE	2	
12	MAC319717	DEFLECTOR – INBOARD	2	
A	MAC135903	BOLT – RHSN M12 X 1.75 X 25-8.8-ZINC		
B	MAC136431	NUT – HEX FLG CTR LOC M12 X 1.75-10		
C	MAC101897	SCREW – HEX WASH HD 3/8 NC X 3/4		
D	MAC18637	WASHER – REG. LOCK 3/8 IN. NOM. I.D.		
E	MAC135785	BOLT – RHSN M10 X 1.5 X 25-8.8-AA1J		
F	MAC135799	NUT – HEX FLG CTR LOC M10 X 1.5-10		
G	MAC197171	BOLT – RHSN M8 X 1.25 X 20-8.8-ZINC		
H	MAC135337	NUT – HEX FLG CTR LK M8 X 1.25-8-AA1J		
J	MAC191489	BOLT – RHSSN TFL M8 X 1.25 X 16-8.8-AA1J		
K	MAC320290	SCREW – TORX TRUSS HD M8 X 1.25 X 25-SPCL-8.8-ZINC		
L	MAC320181	RIVNUT – M8 X 1.25 HEX 3.8-7.9		
M	MAC320190	SCREW – TORX TRUSS HD M8 X 1.25 X 20-SPCL-8.8-ZINC		

23. The kit includes inboard flex deck support assembly (NSS) and screw (MAC101897).

14 Draper – Tensioner

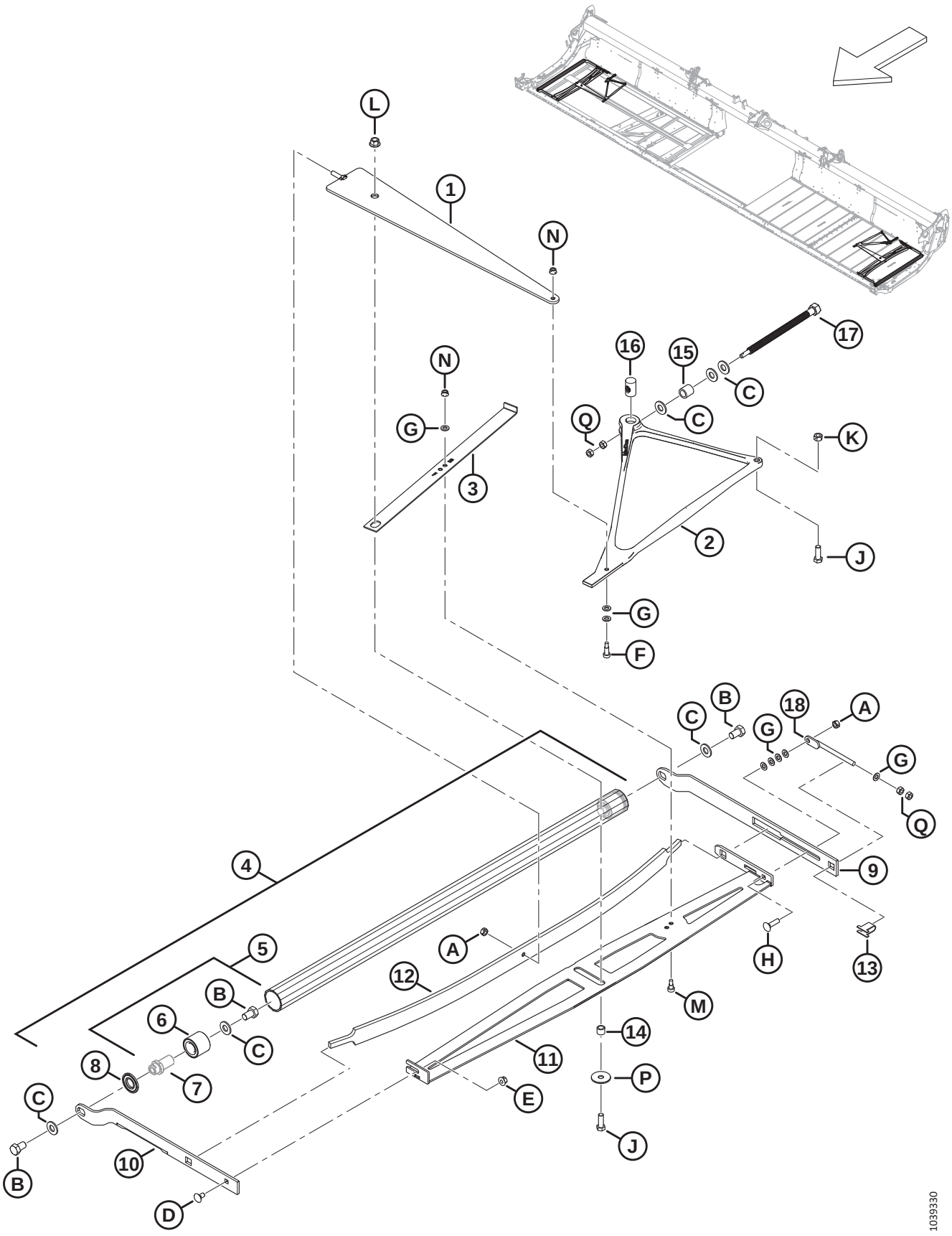

DRAPER – TENSIONER

Ref	Part Number	Description	Qty	Serial Number
1	MAC319051	MEMBER – COMPRESSION WELDT	2	
2	MAC275902	CASTING – TENSIONER BELLCRANK	2	
3	MAC275877	INDICATOR – TENSIONER	2	
4	MAC275211	IDLER ROLLER ASSY SERVICE [24]	2	
5	MAC165735	PIN ASSY – DRAPER ROLLER [25]	4	
6	MAC132607	BEARING – DOUBLE ROW BALL 52 OD X 25 BORE	4	
7	NSS	PIN [26]		
8	MAC120845	SEAL – NILOS LSTO STEEL DISK	4	
9	MAC275324	ARM – IDLER ROLLER REAR	2	
10	MAC319708	ARM – RH FRONT IDLER ROLLER	1	
	MAC319707	ARM – LH FRONT IDLER ROLLER	1	
11	MAC275375	MEMBER – RH STABILIZER WELDT	1	
	MAC275348	MEMBER – LH STABILIZER WELDT	1	
12	MAC227747	SPRING – LEAF	2	
13	MAC275232	SUPPORT – ADJUSTER SCREW	2	
14	MAC132531	SPACER	2	
15	MAC227656	SPACER – TENSIONER BOLT	2	
16	MAC275879	NUT – SPECIAL LEAD-SCREW	2	
17	MAC320167	BOLT – HEX HD M16 X 4.0-SPCL-8.8-AA1J	2	
18	MAC227914	BOLT – ADJUSTER WELDT	2	
A	MAC320206	NUT – HEX CTR LOC M10 X 1.5-8-ZINC		
B	MAC145249	BOLT – HEX HD TFL 5/8-18 X 1.0 GR5-AA1J		
C	MAC30441	WASHER – HARDENED ASTM F436 5/8		
D	MAC135785	BOLT – RHSN M10 X 1.5 X 25-8.8-AA1J		
E	MAC135799	NUT – HEX FLG CTR LOC M10 X 1.5-10		
F	MAC197275	SCREW – HEX SOC HD SHLDR M10 X 20		
G	MAC184711	WASHER – FLAT REG M10-200HV-AA1J		
H	MAC152732	BOLT – RHSN M10 X 1.5 X 40-8.8-AA1J		
J	MAC152730	BOLT – HEX HD TFL M12 X 1.75 X 35-10.9-AA1J		

24. Includes two pin assemblies (MAC165735) and two seals (MAC120845).
25. Includes pin (NSS), bearing (MAC132607), and hardware (MAC30441, MAC145249).
26. Not sold separately; included in pin assembly MAC165735.

DRAPER – TENSIONER

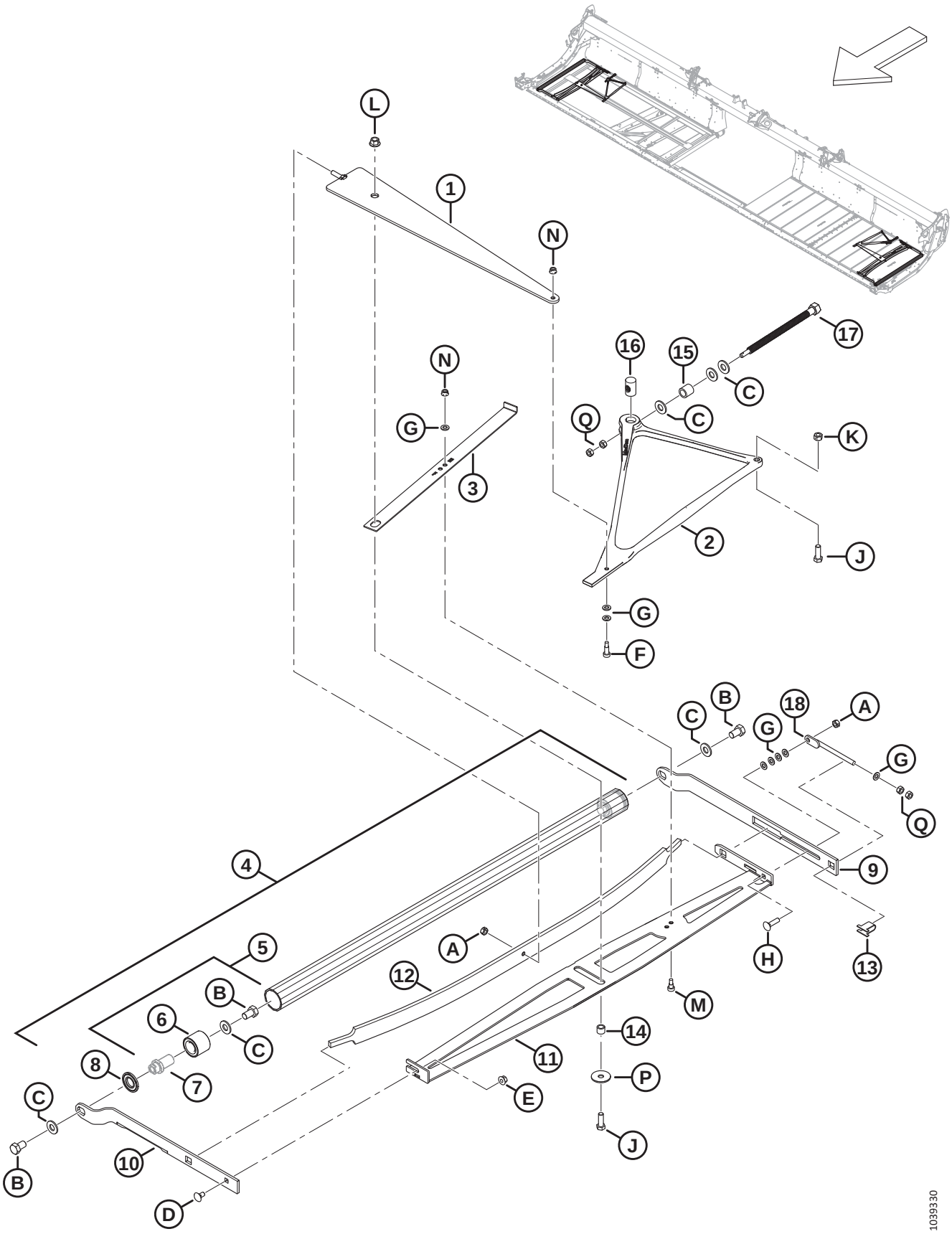

Ref	Part Number	Description	Qty	Serial Number
K	MAC136759	NUT – HEX CTR LOC M12 X 1.75-8-AA1J		
L	MAC136431	NUT – HEX FLG CTR LOC M12 X 1.75-10		
M	MAC135894	SCREW – HEX SOC HD SHLDR M10		
N	MAC135337	NUT – HEX FLG CTR LK M8 X 1.25-8-AA1J		
P	MAC42592	WASHER – FLAT		
Q	MAC30505	NUT – HEX M10 X 1.5-10-AA1J		

15 Draper – Drive Roller

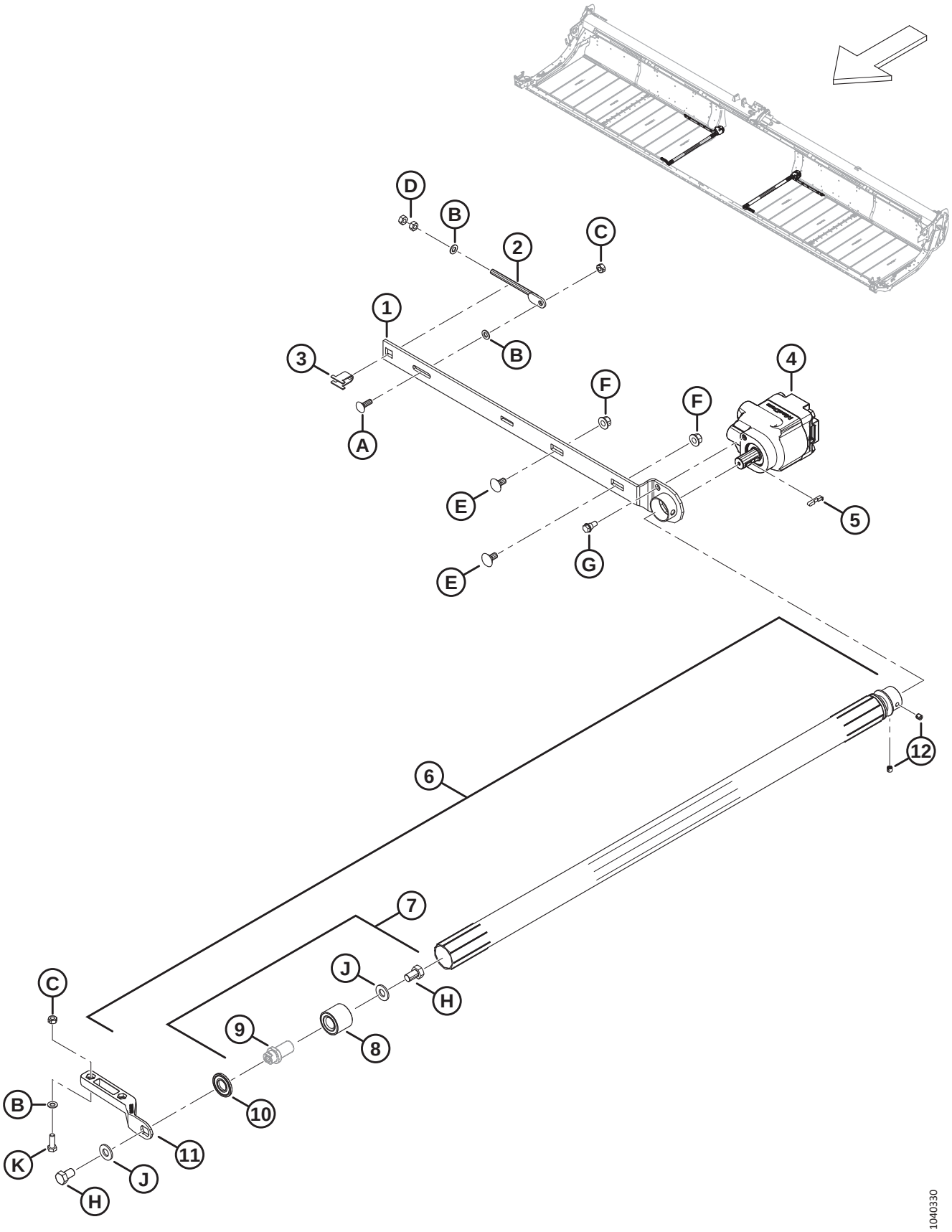

DRAPER – DRIVE ROLLER

Ref	Part Number	Description	Qty	Serial Number
1	MAC275332	ARM – DRIVE ROLLER WELDT	1	
2	MAC227914	BOLT – ADJUSTER WELDT	1	
3	MAC275232	SUPPORT – ADJUSTER SCREW	1	
4	MAC275860	MOTOR – HYD GEAR DRAPER DRIVE	1	
	MAC319583	SEAL KIT – DRAPER DRIVE MOTOR		
5	MAC275864	KEY – DRAPER DRIVE MOTOR	1	
6	MAC319676	DRIVE ROLLER ASSY SERVICE [27]	1	
7	MAC165735	PIN ASSY – DRAPER ROLLER [28]	1	
8	MAC132607	BEARING – DOUBLE ROW BALL 52 OD X 25 BORE	1	
9	NSS	PIN [29]		
10	MAC120845	SEAL – NILOS LSTO STEEL DISK	1	
11	MAC319265	ARM – FRONT DRAPER DRIVE MACH	2	
12	MAC320182	SCREW – SET SOC M10 X 1.5 X 10-8.8-BO	2	
A	MAC184662	BOLT – RHSN TFL M10 X 1.5 X 30-8.8-AA1J		
B	MAC184711	WASHER – FLAT REG M10-200HV-AA1J		
C	MAC320206	NUT – HEX CTR LOC M10 X 1.5-8-ZINC		
D	MAC30505	NUT – HEX M10 X 1.5-10-AA1J		
E	MAC135903	BOLT – RHSN M12 X 1.75 X 25-8.8-ZINC		
F	MAC136431	NUT – HEX FLG CTR LOC M12 X 1.75-10		
G	MAC172259	BOLT – SHOULDER .375-16 UNC-AA1J		
H	MAC145249	BOLT – HEX HD TFL 5/8-18 X 1.0 GR5-AA1J		
J	MAC30441	WASHER – HARDENED ASTM F436 5/8		
K	MAC184661	BOLT – HEX HD TFLM 10 X 1.5 X 30-8.8-AA1J		

27. Includes vulcanized roller (NSS), pin assembly (MAC165735), seal (MAC120845), and two set screws (MAC320182).
28. Includes pin (NSS), bearing (MAC132607), and hardware (MAC30441, MAC145249).
29. Not sold separately; included in pin assembly (MAC165735).

16 Draper – Decks (D225, D230, and D235)

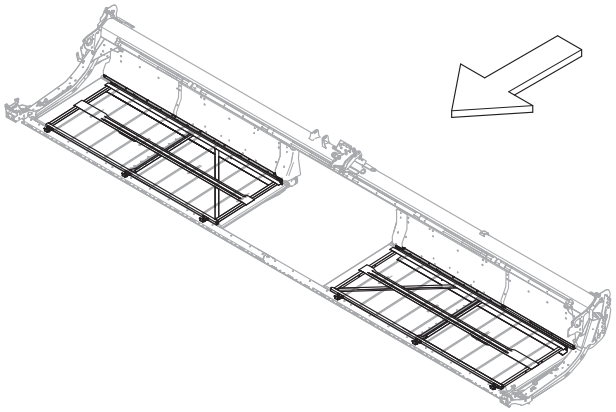

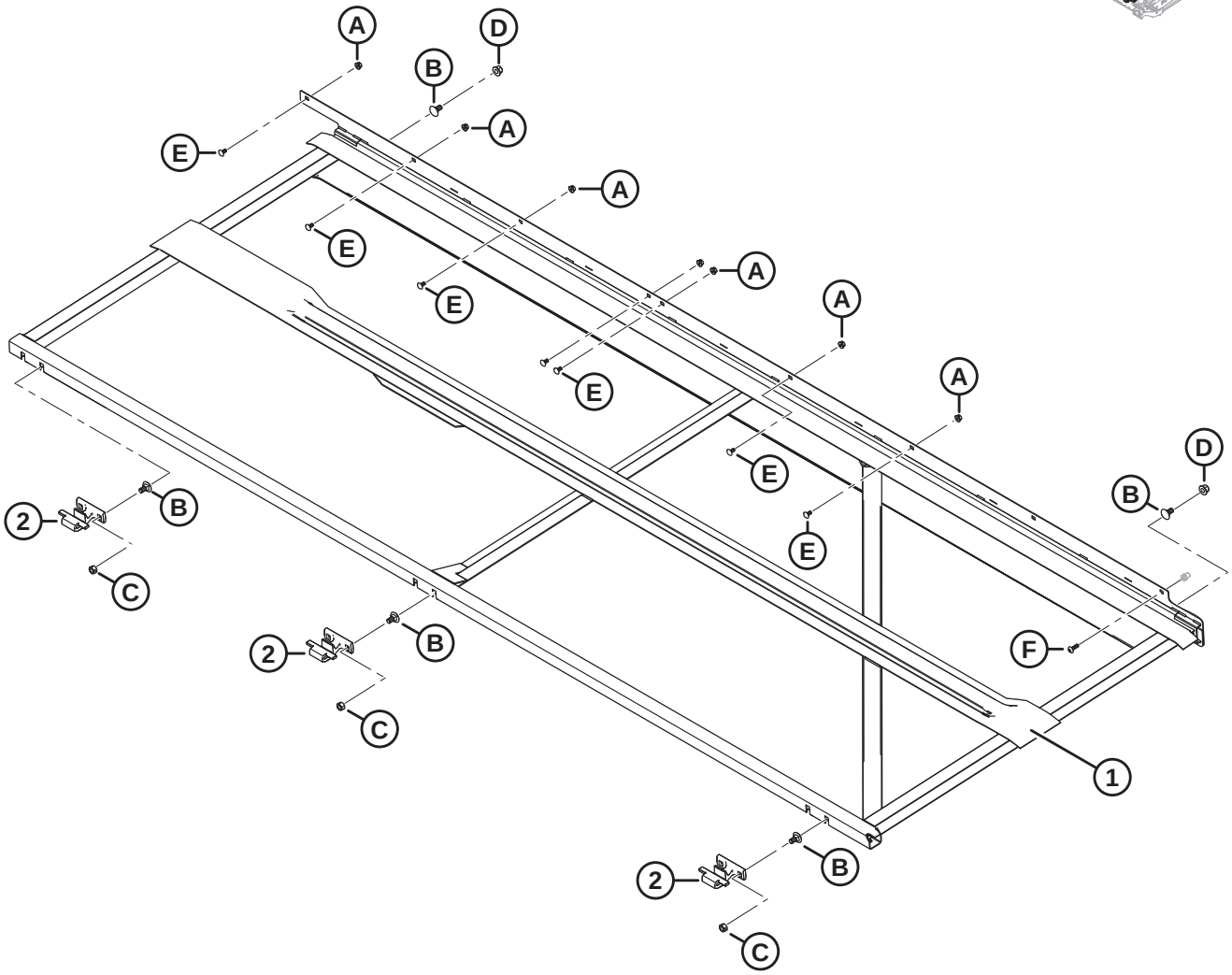

1040591

Ref	Part Number	Description	Qty	Serial Number
1	MAC275407	DECK WELDT – 25 FT RH RIGID	1	
	MAC275406	DECK WELDT – 25 FT LH RIGID	1	
	MAC275465	DECK WELDT – 30 FT RH RIGID	1	
	MAC275464	DECK WELDT – 30 FT LH RIGID	1	
	MAC275309	DECK WELDT – 35 FT RH RIGID	1	
	MAC275308	DECK WELDT – 35 FT LH RIGID	1	
2	MAC319225	CASTING – DECK FRONT HOOK [30]		
A	MAC135337	NUT – HEX FLG CTR LK M8 X 1.25-8-AA1J		
B	MAC135903	BOLT – RHSN M12 X 1.75 X 25-8.8-ZINC		
C	MAC136759	NUT – HEX CTR LOC M12 X 1.75-8-AA1J		
D	MAC136431	NUT – HEX FLG CTR LOC M12 X 1.75-10		
E	MAC191489	BOLT – RHSSN TFL M8 X 1.25 X 16-8.8-AA1J		
F	MAC320290	SCREW – TORX TRUSS HD M8 X 1.25 X 25-SPCL-8.8-ZINC		

30. Quantities: D225 and D230 = 6; D235 = 8.

17 Draper – Decks (D241)

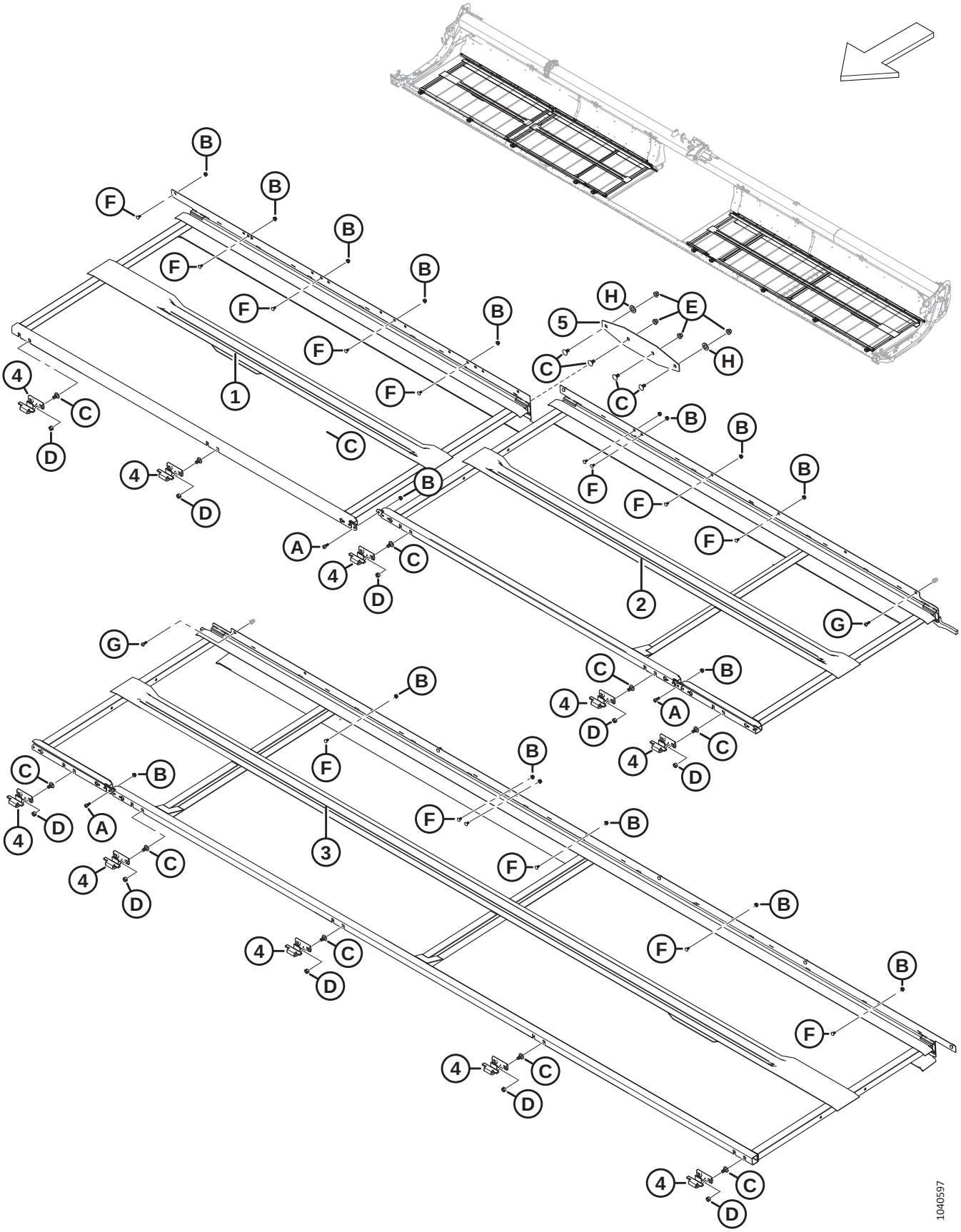

Ref	Part Number	Description	Qty	Serial Number
1	MAC275770	DECK WELDT – RH OUTBOARD	1	
2	MAC275514	DECK WELDT – 41 FT RH INBOARD	1	
3	MAC275513	DECK WELDT – 41 FT LH	1	
4	MAC319225	CASTING – DECK FRONT HOOK	10	
5	MAC275690	PLATE – DECK FRAME JOINT	1	
A	MAC135894	SCREW – HEX SOC HD SHLDR M10		
B	MAC135337	NUT – HEX FLG CTR LK M8 X 1.25-8-AA1J		
C	MAC135903	BOLT – RHSN M12 X 1.75 X 25-8.8-ZINC		
D	MAC136759	NUT – HEX CTR LOC M12 X 1.75-8-AA1J		
E	MAC136431	NUT – HEX FLG CTR LOC M12 X 1.75-10		
F	MAC191489	BOLT – RHSSN TFL M8 X 1.25 X 16-8.8-AA1J		
G	MAC320290	SCREW – TORX TRUSS HD M8 X 1.25 X 25-SPCL-8.8-ZINC		
H	MAC112130	WASHER – HARD ASTM F4363/4 IN. NOM. ID AB0C		

18 Draper – Decks (D245)

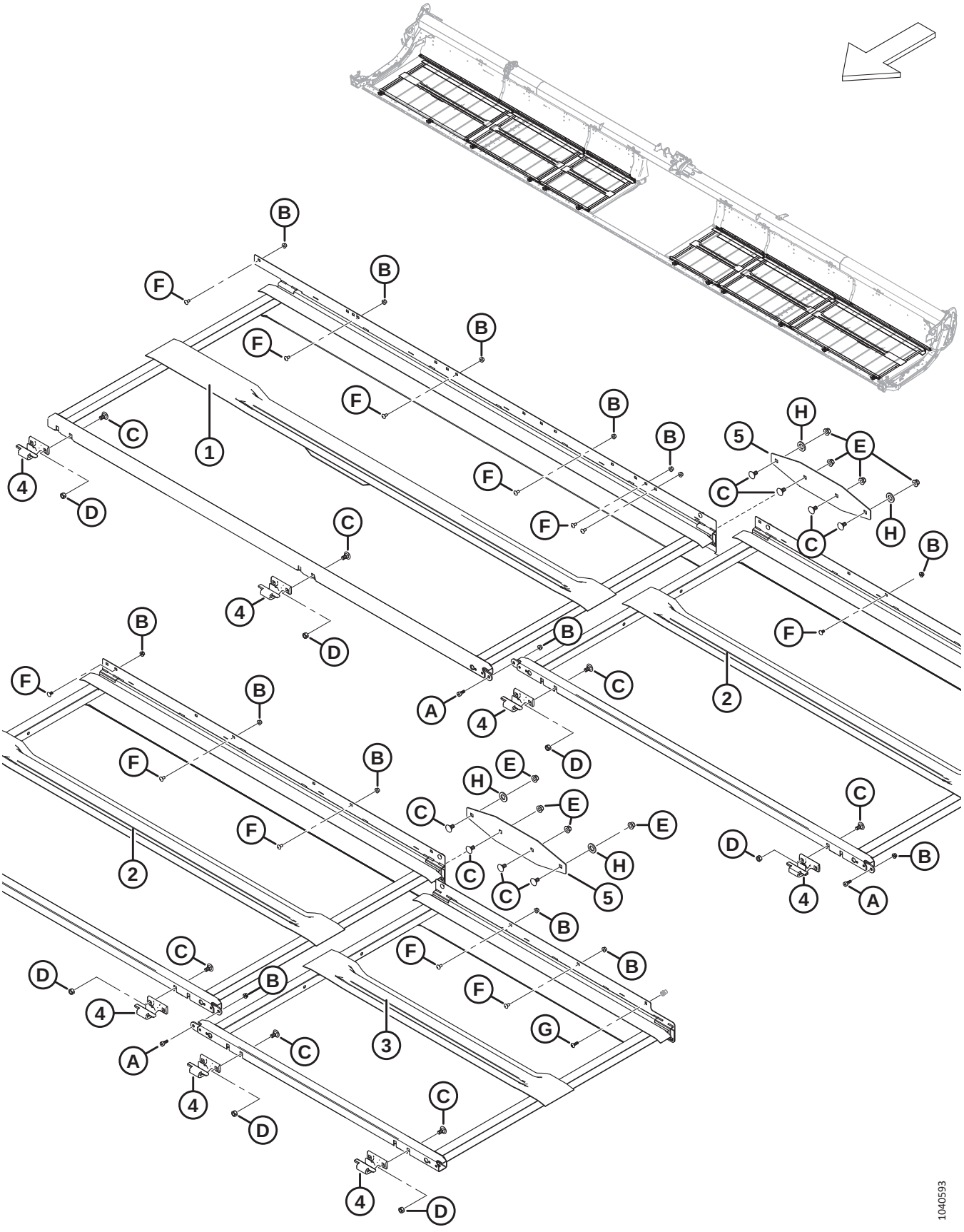

Ref	Part Number	Description	Qty	Serial Number
1	MAC275770	DECK WELDT – RH OUTBOARD	1	
	MAC275960	DECK WELDT – LH OUTBOARD	1	
2	MAC275779	DECK WELDT – 45 FT MIDDLE	2	
3	MAC275641	DECK WELDT – RH INBOARD	1	
	MAC275640	DECK WELDT – LH INBOARD	1	
4	MAC319225	CASTING – DECK FRONT HOOK	12	
5	MAC275690	PLATE – DECK FRAME JOINT	4	
A	MAC135894	SCREW – HEX SOC HD SHLDR M10		
B	MAC135337	NUT – HEX FLG CTR LK M8 X 1.25-8-AA1J		
C	MAC135903	BOLT – RHSN M12 X 1.75 X 25-8.8-ZINC		
D	MAC136759	NUT – HEX CTR LOC M12 X 1.75-8-AA1J		
E	MAC136431	NUT – HEX FLG CTR LOC M12 X 1.75-10		
F	MAC191489	BOLT – RHSSN TFL M8 X 1.25 X 16-8.8-AA1J		
G	MAC320290	SCREW – TORX TRUSS HD M8 X 1.25 X 25-SPCL-8.8-ZINC		
H	MAC112130	WASHER – HARD ASTM F4363/4 IN. NOM. ID AB0C		

19 Draper – Tracks

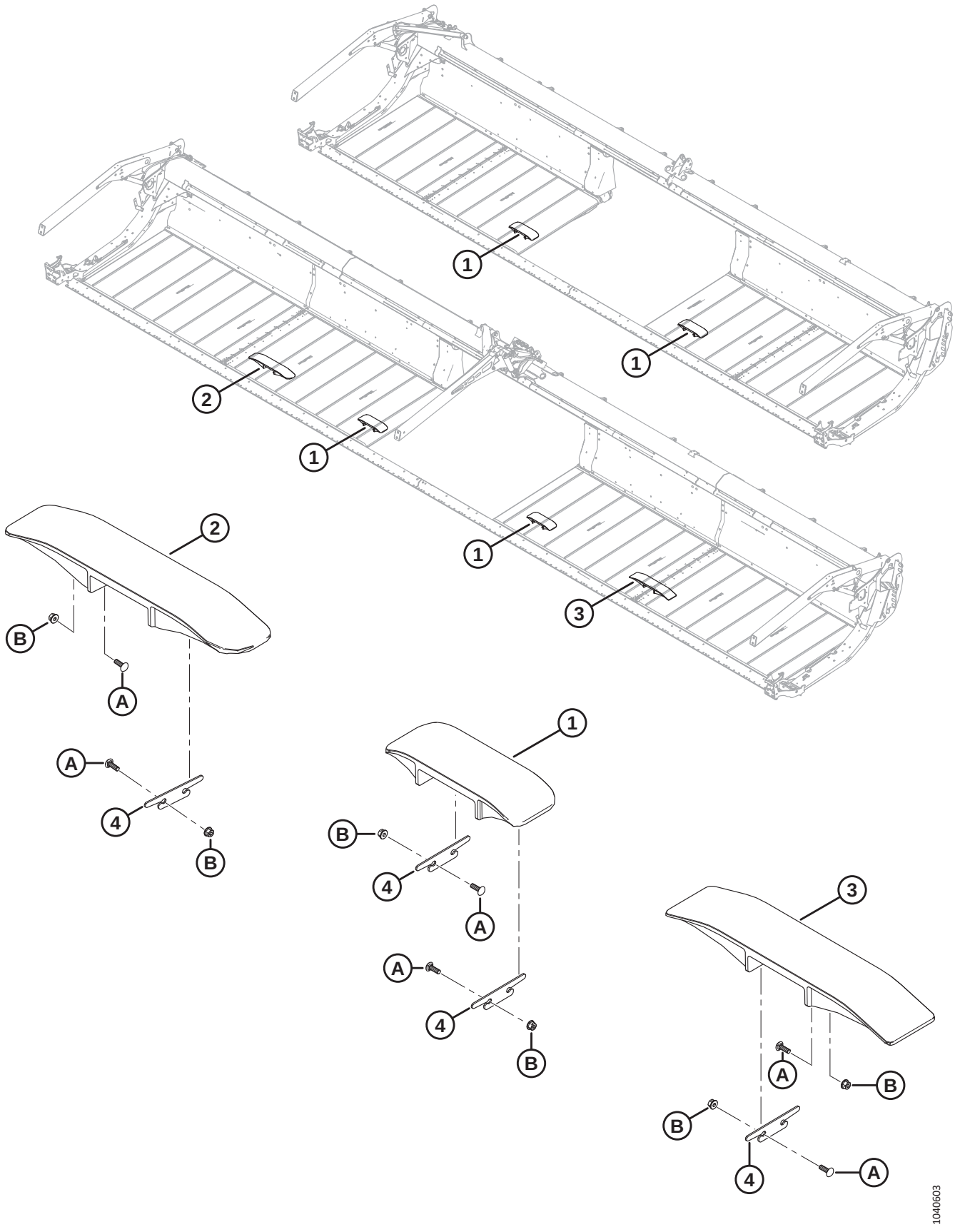

DRAPER – TRACKS

Ref	Part Number	Description	Qty	Serial Number
1	MAC360150	TRACK – SHORT PLASTIC	2	
2	MAC360151	TRACK – ANGLED PLASTIC [31]	1	
3	MAC340841	TRACK – STANDARD PLASTIC [32]	1	
4	MAC340681	SHIM – DRAPER TRACK [33]		
A	MAC136824	BOLT – RHSSN M8 X 1.25 X 25-8.8-AA1J		
B	MAC135337	NUT – HEX FLG CTR LK M8 X 1.25-8-AA1J		

31. Double-reel headers only. Used on the RH draper deck.
32. Double-reel headers only. Used on the LH draper deck.
33. Quantities: single reel = 4; double reel = 6.

20 Draper – Seals (D225, D230, and D235)

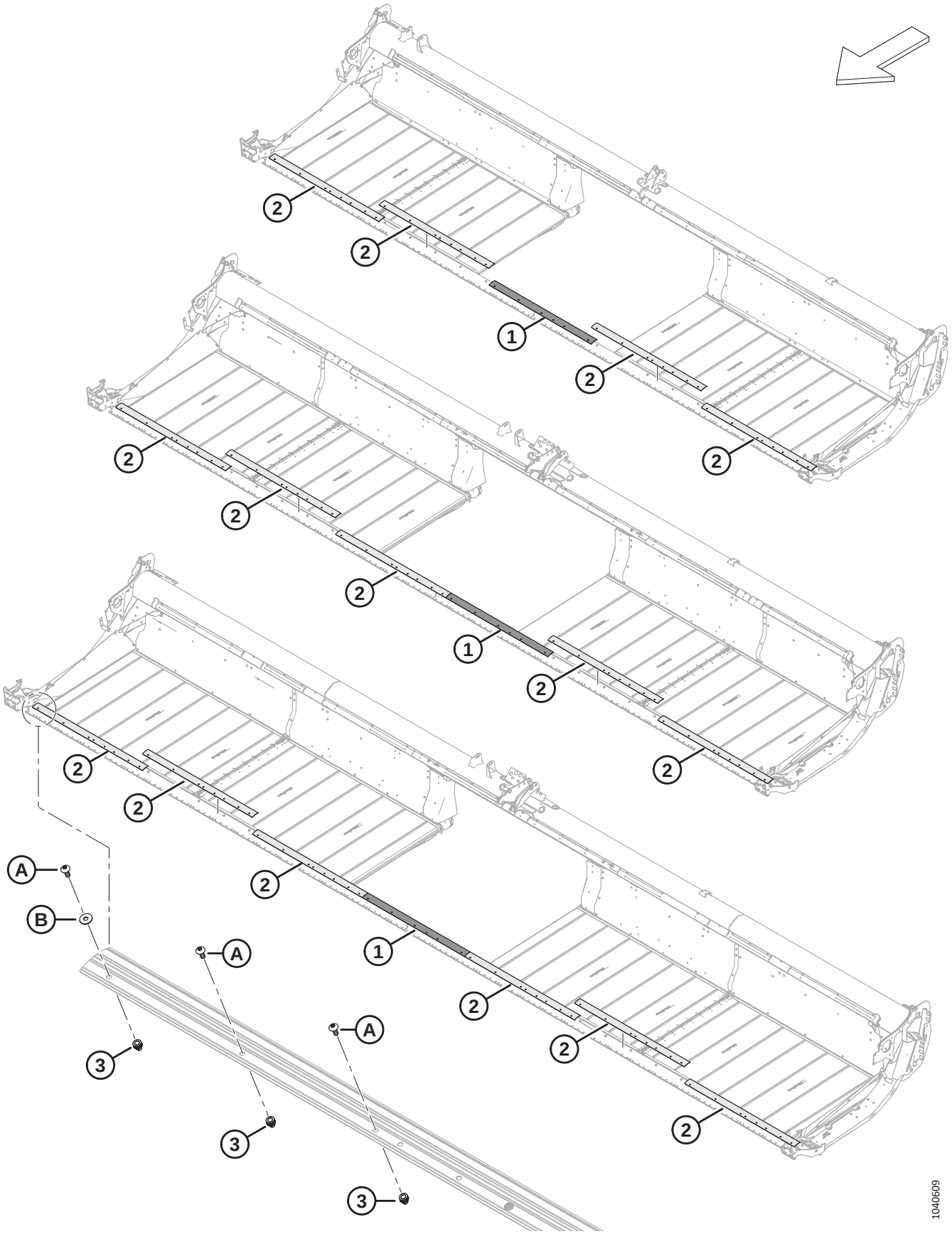

DRAPER – SEALS (D225, D230, AND D235)

Ref	Part Number	Description	Qty	Serial Number
1	MAC319430	PLATE – CBAR SEAL, RIGID	1	
2	MAC319431	PLATE – CBAR SEAL MIDDLE [34]		
3	MAC320448	RIVNUT – M8 X 1.25 HEX [35]		
A	MAC320190	SCREW – TORX TRUSS HD M8 X 1.25 X 20-SPCL-8.8-ZINC		
B	MAC184709	WASHER – FLAT LARGE M8-200HV		

34. Quantities: D225 = 4, D230 = 5, and D235 = 6.
35. Quantities: D225 = 27, D230 = 32, and D235 = 37.

21 Draper – Seals (D241 and D245)

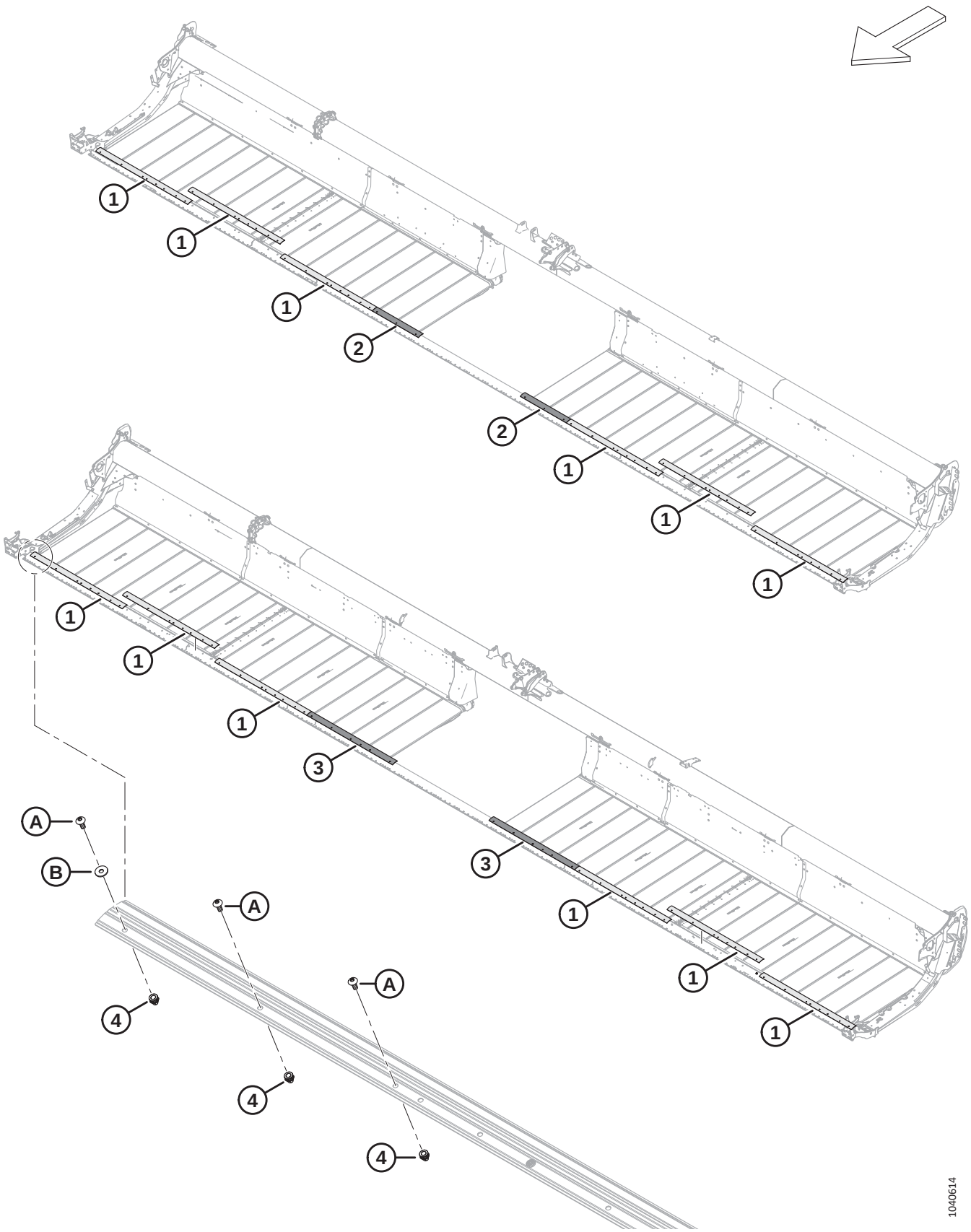

DRAPER – SEALS (D241 AND D245)

Ref	Part Number	Description	Qty	Serial Number
1	MAC319431	PLATE – CBAR SEAL MIDDLE	6	
2	MAC319429	PLATE – CBAR SEAL INCREMENTAL [36]	2	
3	MAC319430	PLATE – CBAR SEAL, RIGID [37]	2	
4	MAC320448	RIVNUT – M8 X 1.25 HEX [38]		
A	MAC320190	SCREW – TORX TRUSS HD M8 X 1.25 X 20-SPCL-8.8-ZINC		
B	MAC184709	WASHER – FLAT LARGE M8-200HV		

36. D241 only.
37. D245 only.
38. Quantities: D241 = 37; D245 = 41.

22 Draper Deflectors – Narrow

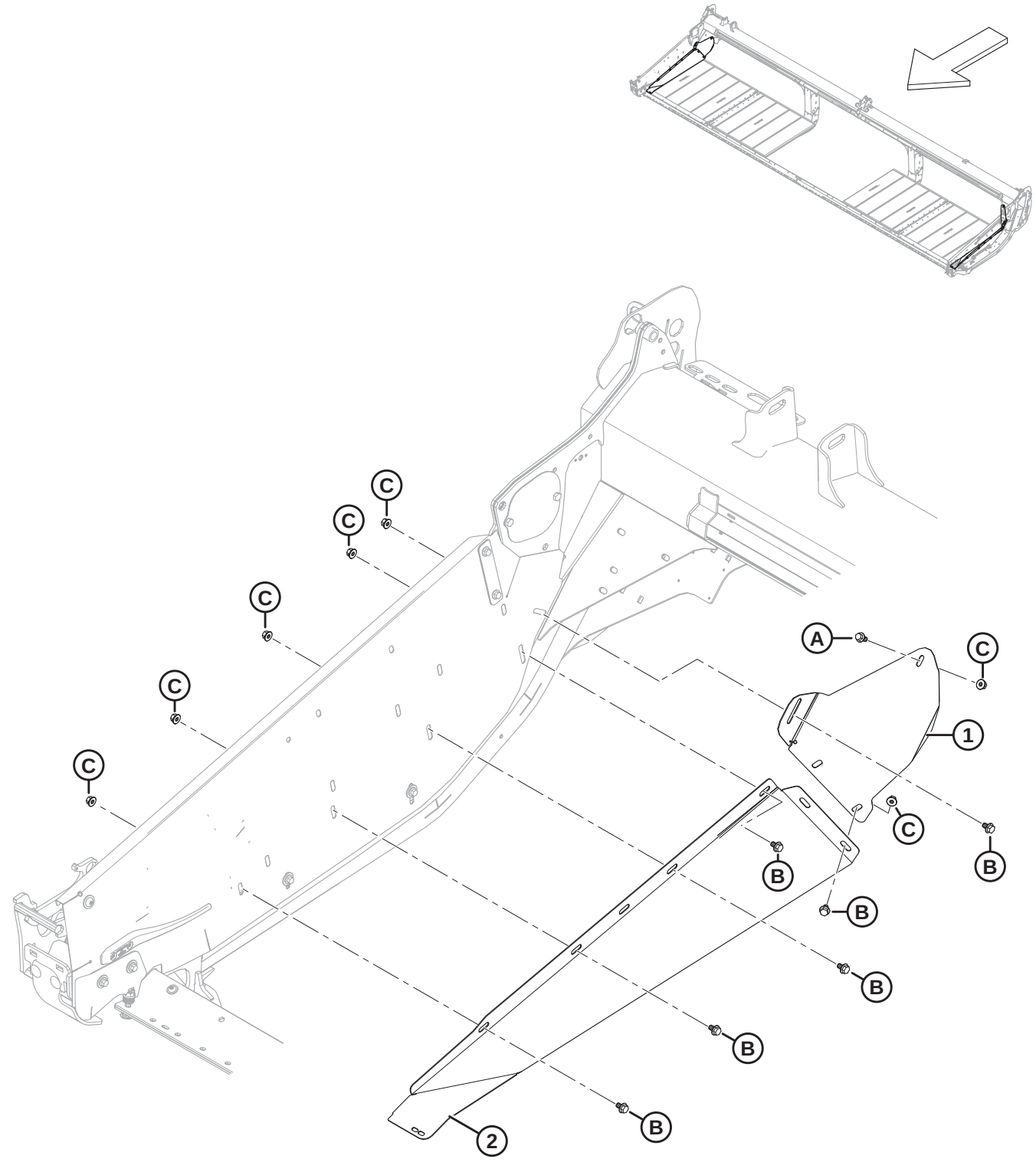

1040344

DRAPER DEFLECTORS – NARROW

Ref	Part Number	Description	Qty	Serial Number
1	MAC360755	DEFLECTOR – RH NARROW REAR	1	
	MAC360754	DEFLECTOR – LH NARROW REAR	1	
2	MAC360521	DEFLECTOR – RH NARROW FRONT	1	
	MAC360520	DEFLECTOR – LH NARROW FRONT	1	
A	MAC152655	BOLT – HEX FLG HD M10 X 1.5 X 20-8.8-AA1J		
B	MAC136151	BOLT – HEX FLG HD TFL M10 X 1.5 X 16-8.8-AA1J		
C	MAC135799	NUT – HEX FLG CTR LOC M10 X 1.5-10		

23 Guards, Hold-Downs, and Cutterbar Shoes – Single Knife, Pointed (D230 and D235)

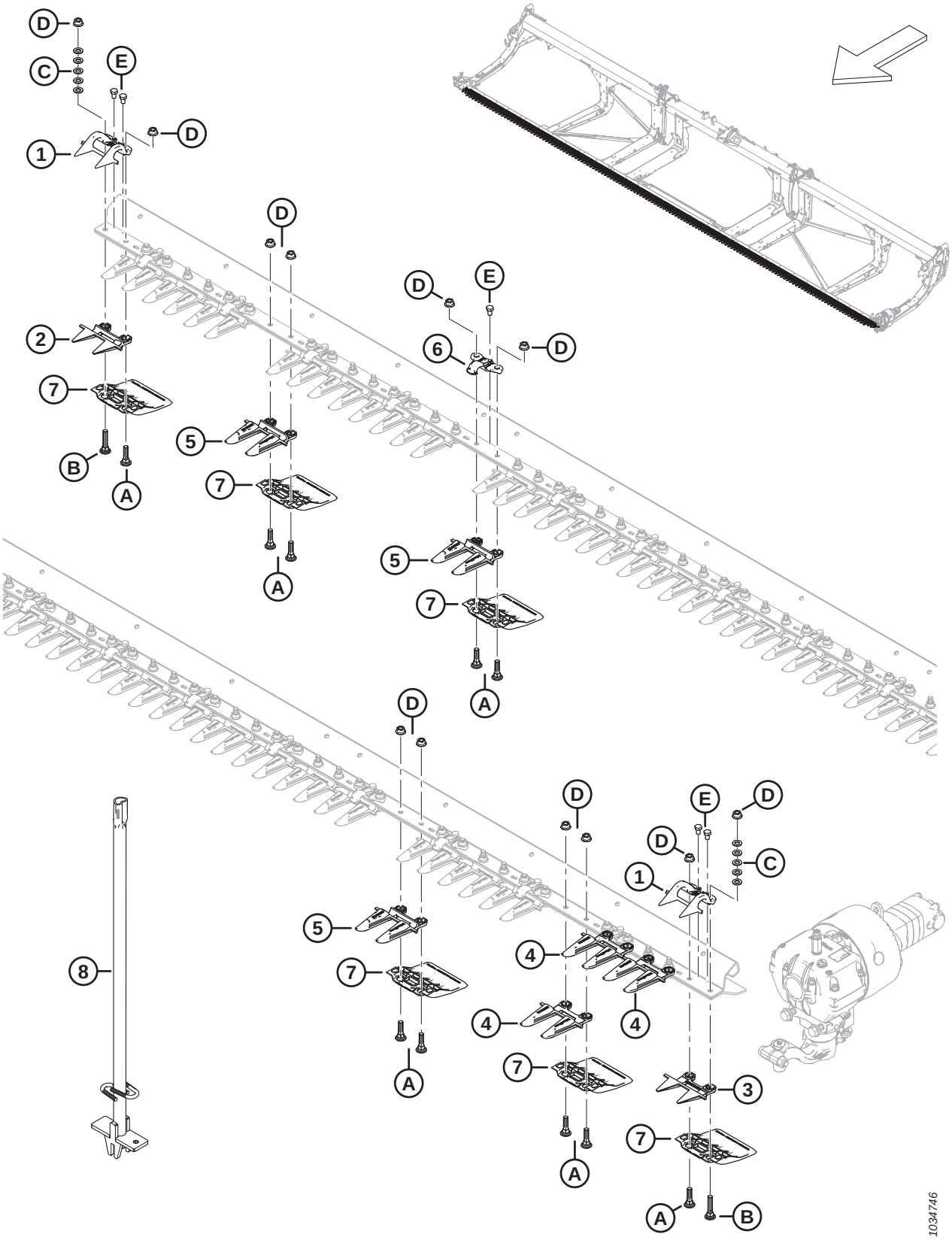

GUARDS, HOLD-DOWNS, AND CUTTERBAR SHOES – SINGLE KNIFE, POINTED (D230 AND D235)

Ref	Part Number	Description	Qty	Serial Number
	MAC286669	KIT – POINTED GUARDS 30 FT SK [39]	A/R	
	MAC286670	KIT – POINTED GUARDS 35 FT SK [40]	A/R	
1	MAC286331	HOLD-DOWN – PLUG FREE END	2	
2	MAC286318	KNIFE GUARD – PLUG FREE	1	
3	MAC286319	KNIFE GUARD – PLUG FREE END	1	
4	MAC286316	KNIFE GUARD – POINTED END	3	
5	MAC286315	KNIFE GUARD – POINTED [41]		
6	MAC286329	HOLD-DOWN – POINTED [42]		
7	MAC286257	SHOE – WEARPLATE CUTTERBAR [43]		
8	MAC286705	TOOL – WELDT	A/R	
A	MAC226295	BOLT – RHSN SPCL M12 X 47-8.8		
B	MAC226280	BOLT – RHSN SPCL M12 X 60-8.8		
C	MAC184714	WASHER – FLAT REG M12-300HV		
D	MAC136036	NUT – HEX SM FLG M12 X 1.75-8-AA1J		
E	MAC136005	BOLT – HEX HD FINE TFL M10 X 1.25 X 16-8.8-AA1J		

39. The kit includes 55 pointed guards (MAC286315), 3 pointed end guards (MAC286316), 1 PlugFree guard (MAC286318), and 1 PlugFree end guard (MAC286319).
40. The kit includes 65 pointed guards (MAC286315), 3 pointed end guards (MAC286316), 1 PlugFree guard (MAC286318), and 1 PlugFree end guard (MAC286319).
41. Quantities: D230 = 55, D235 = 65
42. Quantities: D230 = 29, D235 = 34
43. Quantities: D230 = 60, D235 = 70

24 Guards, Hold-Downs, and Cutterbar Shoes – Single Knife, PlugFree™ (D225 and D230)

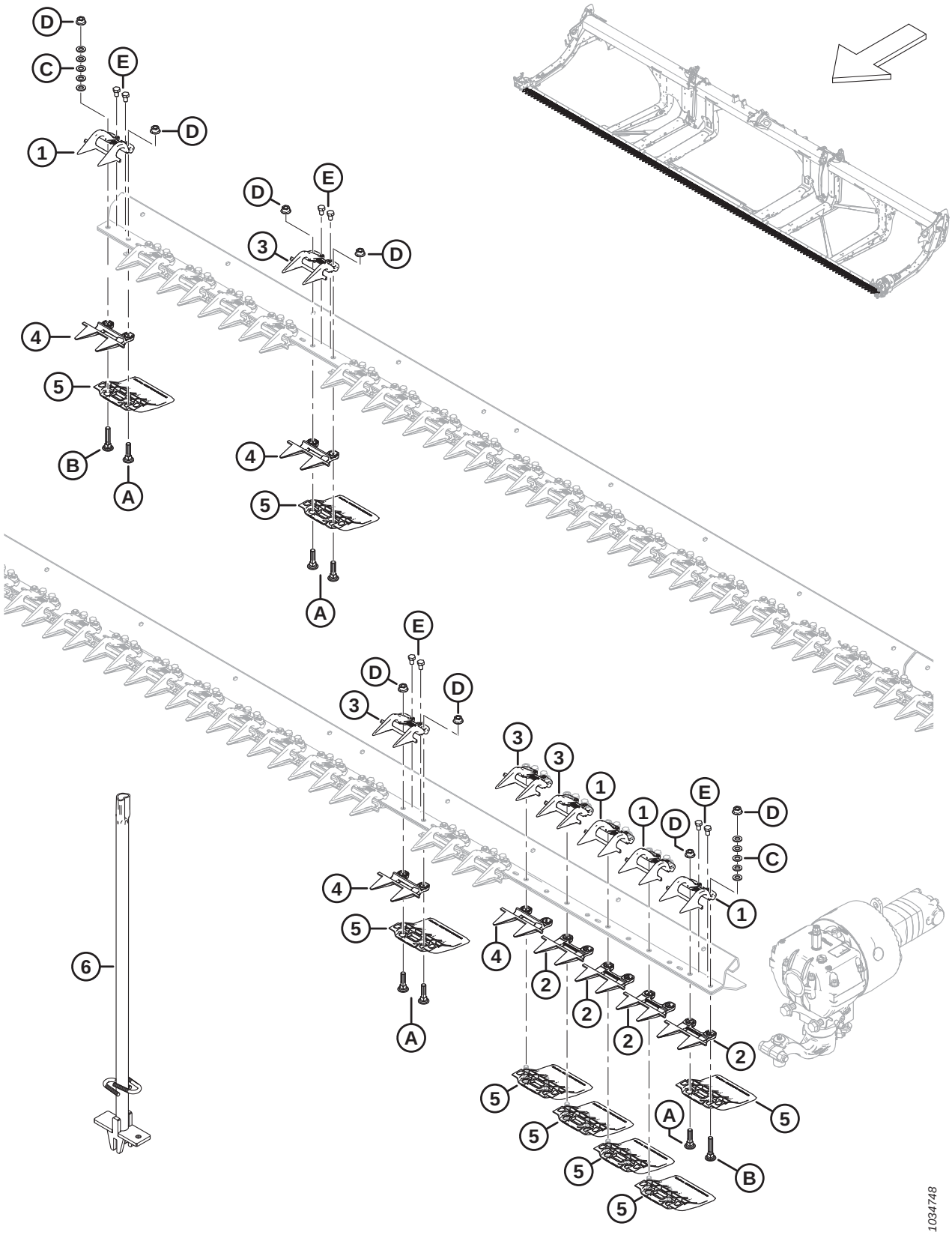

Ref	Part Number	Description	Qty	Serial Number
	MAC286679	KIT – PLUGFREE GUARDS 25 FT SK [44]	A/R	
	MAC286680	KIT – PLUGFREE GUARDS 30 FT SK [45]	A/R	
1	MAC286331	HOLD-DOWN – PLUG FREE END	4	
2	MAC286319	KNIFE GUARD – PLUG FREE END	4	
3	MAC286330	HOLD-DOWN – PLUG FREE [46]		
4	MAC286318	KNIFE GUARD – PLUG FREE SHORT [46]		
5	MAC286257	SHOE – WEARPLATE CUTTERBAR [47]		
6	MAC286705	TOOL – WELDT	A/R	
A	MAC226295	BOLT – RHSN SPCL M12 X 47-8.8		
B	MAC226280	BOLT – RHSN SPCL M12 X 60-8.8		
C	MAC184714	WASHER – FLAT REG M12-300HV		
D	MAC136036	NUT – HEX SM FLG M12 X 1.75-8-AA1J		
E	MAC136005	BOLT – HEX HD FINE TFL M10 X 1.25 X 16-8.8-AA1J		

44. The kit includes 46 PlugFree guards (MAC286318) and 4 end guards (MAC286319).
45. The kit includes 56 PlugFree guards (MAC286318) and 4 end guards (MAC286319).
46. Quantities: D225 = 46, D230 = 56
47. Quantities: D225 = 50, D230 = 60

25 Guards, Hold-Downs, and Cutterbar Shoes – Double Knife, Pointed (D241 and D245)

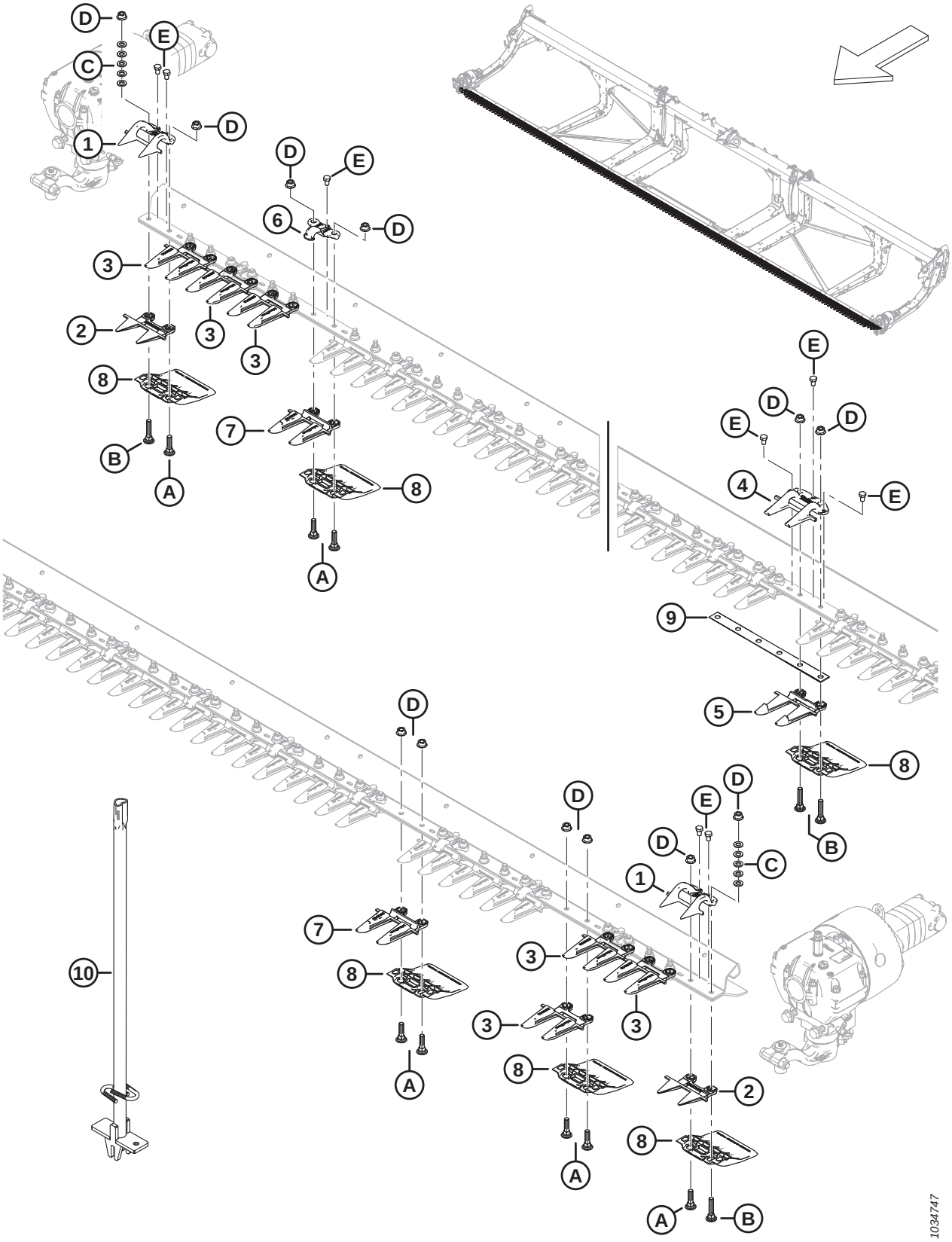

GUARDS, HOLD-DOWNS, AND CUTTERBAR SHOES – DOUBLE KNIFE, POINTED (D241 AND D245)

Ref	Part Number	Description	Qty	Serial Number
	MAC286665	KIT – POINTED GUARDS 41 FT DK [48]	A/R	
	MAC286666	KIT – POINTED GUARDS 45 FT DK [49]	A/R	
1	MAC286331	HOLD-DOWN – PLUG FREE END	2	
2	MAC286319	KNIFE GUARD – PLUG FREE END	2	
3	MAC286316	KNIFE GUARD – POINTED END	6	
4	MAC286332	HOLD-DOWN – POINTED CENTER	1	
5	MAC286317	KNIFE GUARD – POINTED CENTER	1	
6	MAC286329	HOLD-DOWN – POINTED [50]		
7	MAC286315	KNIFE GUARD – POINTED [51]		
8	MAC286257	SHOE – WEARPLATE CUTTERBAR [52]		
9	MAC226861	SHIM – DK OVERLAP	1	
10	MAC286705	TOOL – WELDT	A/R	
A	MAC226295	BOLT – RHSN SPCL M12 X 47-8.8		
B	MAC226280	BOLT – RHSN SPCL M12 X 60-8.8		
C	MAC184714	WASHER – FLAT REG M12-300HV		
D	MAC136036	NUT – HEX SM FLG M12 X 1.75-8-AA1J		
E	MAC136005	BOLT – HEX HD FINE TFL M10 X 1.25 X 16-8.8-AA1J		

48. The kit includes 73 pointed guards (MAC286315), 6 pointed end guards (MAC286316), 1 pointed center guard (MAC286317), 2 PlugFree end guards (MAC286319), and 1 pointed center hold-down (MAC286332).
49. The kit includes 81 pointed guards (MAC286315), 6 pointed end guards (MAC286316), 1 pointed center guard (MAC286317), 2 PlugFree end guards (MAC286319), and 1 pointed center hold-down (MAC286332).
50. Quantities: D241 = 39, D245 = 44
51. Quantities: D241 = 73, D245 = 81
52. Quantities: D241 = 82, D245 = 90

26 Guards, Hold-Downs, and Cutterbar Shoes – Double Knife, PlugFree™ (D241 and D245)

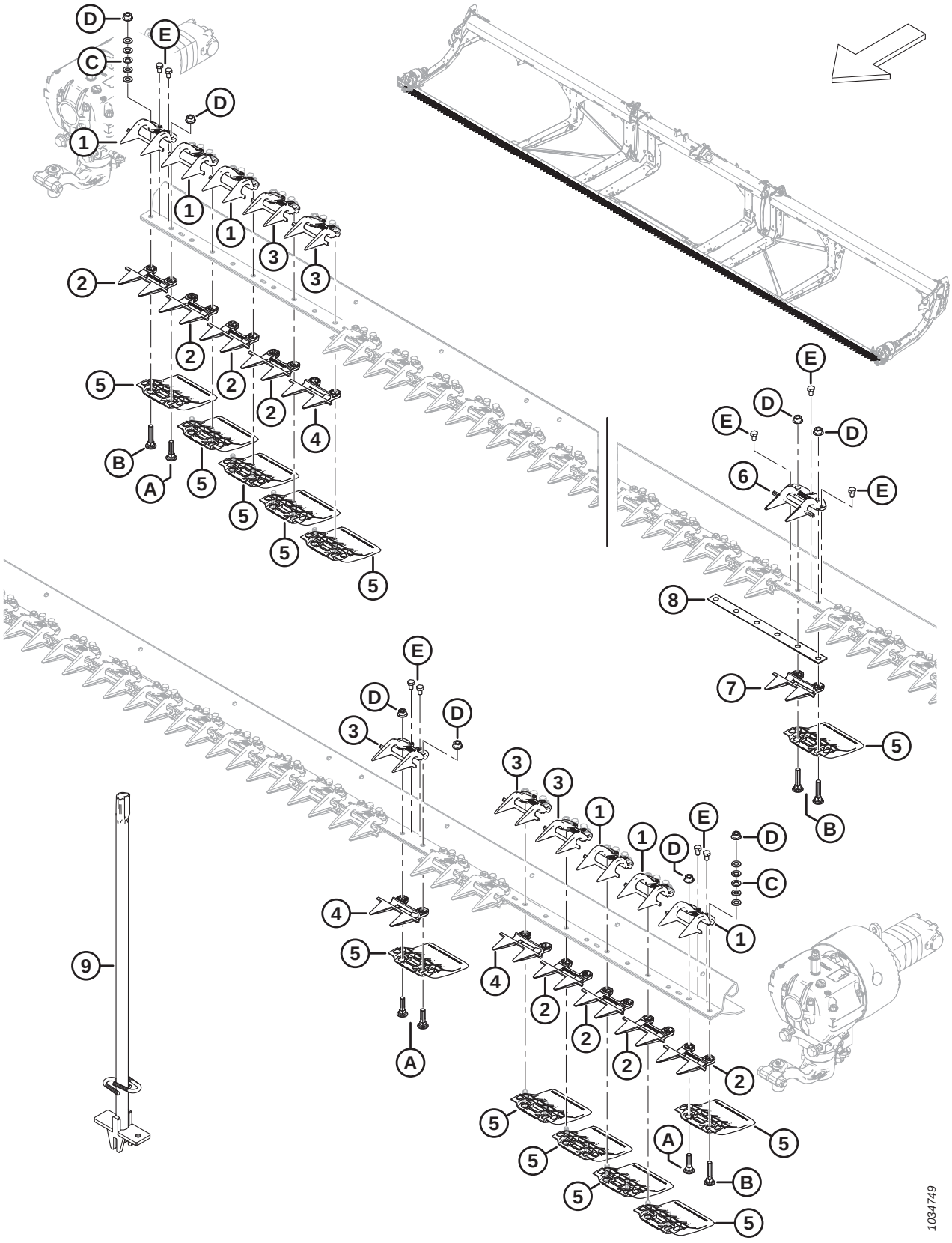

Ref	Part Number	Description	Qty	Serial Number
	MAC286676	KIT – PLUGFREE GUARDS 41 FT DK [53]	A/R	
	MAC286677	KIT – PLUGFREE GUARDS 45 FT DK [54]	A/R	
1	MAC286331	HOLD-DOWN – PLUG FREE END	6	
2	MAC286319	KNIFE GUARD – PLUG FREE END	8	
3	MAC286330	HOLD-DOWN – PLUG FREE [55]		
4	MAC286318	KNIFE GUARD – PLUG FREE SHORT [56]		
5	MAC286257	SHOE – WEARPLATE CUTTERBAR [57]		
6	MAC286333	HOLD-DOWN – PLUG FREE CENTER	1	
7	MAC286320	KNIFE GUARD – PLUG FREE CENTER	1	
8	MAC226861	SHIM – DK OVERLAP	1	
9	MAC286705	TOOL – WELDT	A/R	
A	MAC226295	BOLT – RHSN SPCL M12 X 47-8.8		
B	MAC226280	BOLT – RHSN SPCL M12 X 60-8.8		
C	MAC184714	WASHER – FLAT REG M12-300HV		
D	MAC136036	NUT – HEX SM FLG M12 X 1.75-8-AA1J		
E	MAC136005	BOLT – HEX HD FINE TFL M10 X 1.25 X 16-8.8-AA1J		

53. The kit includes 73 PlugFree guards (MAC286318), 8 end guards (MAC286319), 1 center guard (MAC286320), and 1 center hold-down (MAC286333).
54. The kit includes 81 PlugFree guards (MAC286318), 8 end guards (MAC286319), 1 center guard (MAC286320), and 1 center hold-down (MAC286333).
55. Quantities: D241 = 75, D245 = 83
56. Quantities: D241 = 73, D245 = 81
57. Quantities: D241 = 82, D245 = 90

27 Knives – Single-Knife Headers, Coarse-Tooth Sections (D225, D230, and D235)

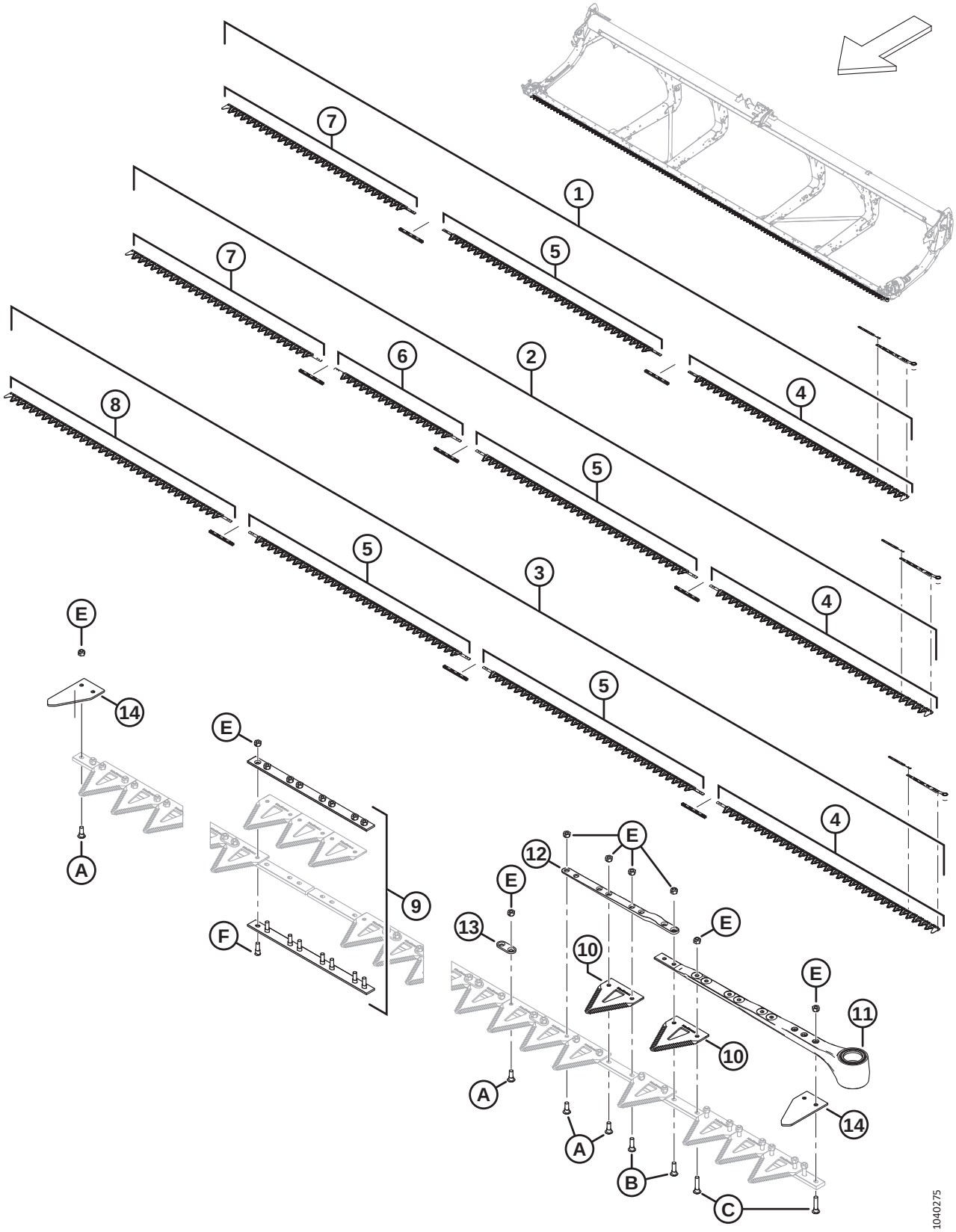

KNIVES – SINGLE-KNIFE HEADERS, COARSE-TOOTH SECTIONS (D225, D230, AND D235)

Ref	Part Number	Description	Qty	Serial Number
1	MAC286597	KIT – KNIFE 25 FT SK COARSE [58]	1	
2	MAC286598	KIT – KNIFE 30 FT SK COARSE [59]	1	
3	MAC286599	KIT – KNIFE 35 FT SK COARSE [60]	1	
4	MAC286562	KNIFE – HEAD SEGMENT LH COARSE 2676 MM	1	
5	MAC286564	KNIFE – CENTER SEGMENT COARSE 2663 MM [61]		
6	MAC286565	KNIFE – CENTER SEGMENT COARSE 1520 MM [62]		
7	MAC286566	KNIFE – TAIL SEGMENT SK COARSE 2295 MM [63]		
8	MAC286567	KNIFE – TAIL SEGMENT SK COARSE 2676 MM [64]		
9	MAC286493	KIT – KNIFE SPLICE [65]		
10	MAC286461	SECTION – CLEARCUT COARSE (25 PACK)		
	MAC286462	SECTION – CLEARCUT FINE (25 PACK)	OPT	
	MAC286627	SECTION – CLEARCUT ULTRA COARSE (25 PACK)	OPT	
11	MAC226941	KNIFE HEAD ASSEMBLY	1	
	MAC115670	O-RING – 1.78 X 34.64	1	
	MAC113937	DISC	1	
	MAC113222	SEAL KIT	1	
	MAC100500	BEARING – NEEDLE	1	
12	MAC286440	BAR – FORGED	1	
13	MAC286481	BAR – REINFORCEMENT (25 PACK)		
14	MAC226983	SECTION – END	2	
A	MAC286475	SCREW – M6 X 18 MM, C/W NUT (50 PACK)		
B	MAC286476	SCREW – M6 X 22 MM, C/W NUT (25 PACK)		

58. The kit includes one ClearCut coarse section, 25 pack (MAC286461), two knife splice kits (MAC286493), one LH coarse knife head segment (MAC286562), one center coarse knife segment (MAC286564), and one tail coarse knife segment (MAC286566).
59. The kit includes one ClearCut coarse section, 25 pack (MAC286461), three knife splice kits (MAC286493), one LH coarse knife head segment (MAC286562), one center coarse knife segment (MAC286564), one center coarse knife segment (MAC286565), and one tail coarse knife segment (MAC286566).
60. The kit includes one ClearCut coarse section, 25 pack (MAC286461), three knife splice kits (MAC286493), one LH coarse knife head segment (MAC286562), two center coarse knife segments (MAC286564), and one tail coarse knife segment (MAC286567).
61. Quantities: D225 = 1, D230 = 1, D235 = 2
62. Quantities: D225 = 0, D230 = 1, D235 = 0
63. Quantities: D225 = 1, D230 = 1, D235 = 0
64. Quantities: D225 = 0, D230 = 0, D235 = 1
65. Quantities: D225 = 2, D230 = 3, D235 = 3

KNIVES – SINGLE-KNIFE HEADERS, COARSE-TOOTH SECTIONS (D225, D230, AND D235)

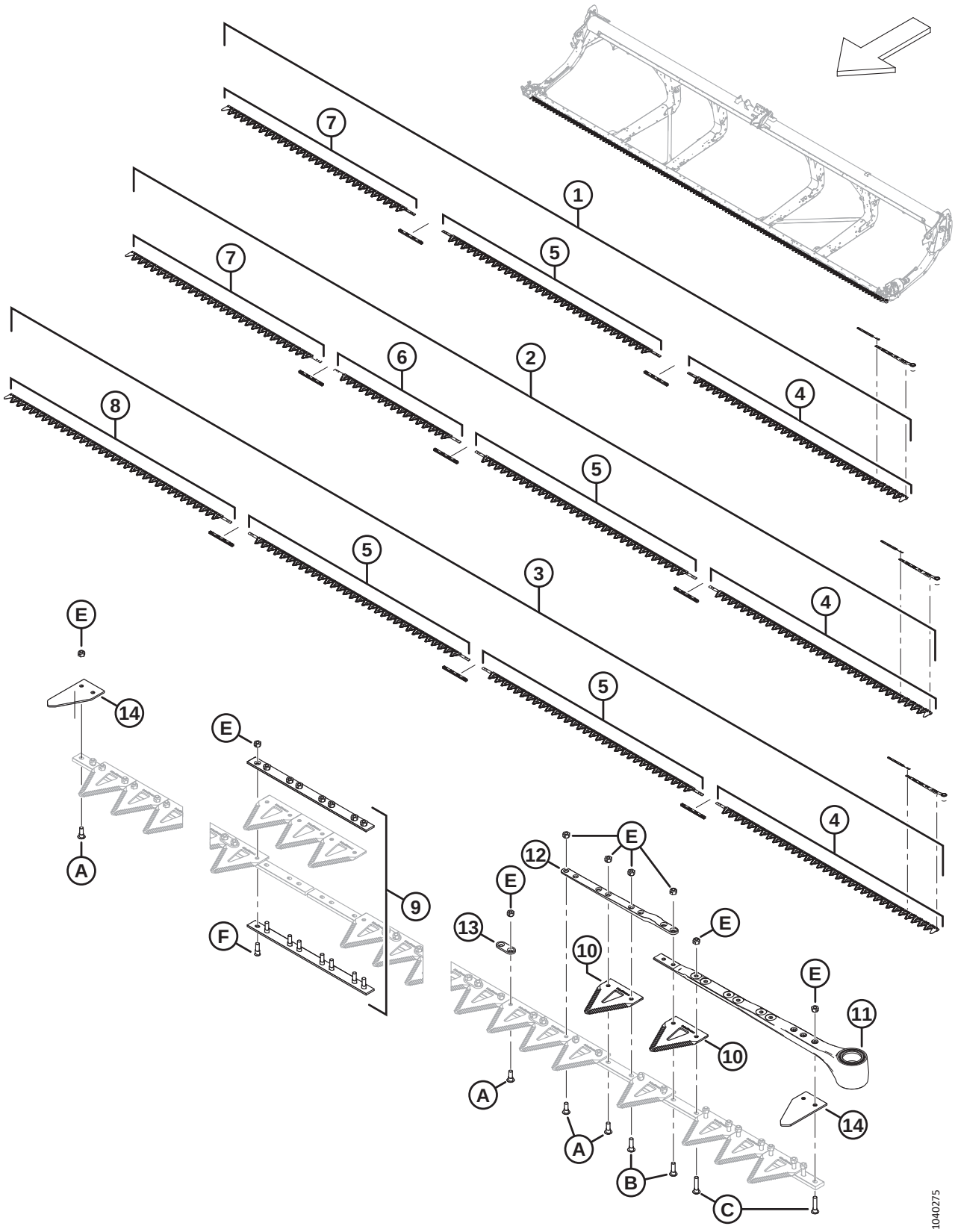

Ref	Part Number	Description	Qty	Serial Number
C	MAC286477	SCREW – M6 X 29 MM, C/W NUT (25 PACK)		
D	MAC286478	SCREW – CSK M6 X 14 MM, C/W NUT (25 PACK)		
E	MAC286479	NUT – CTR LOC CSK M6 X 1 (50 PACK)		
F	MAC286621	SCREW – CSK M6 X 22 MM, C/W NUT (25 PACK)		

28 Knives – Double-Knife Headers, Coarse-Tooth Sections (D241)

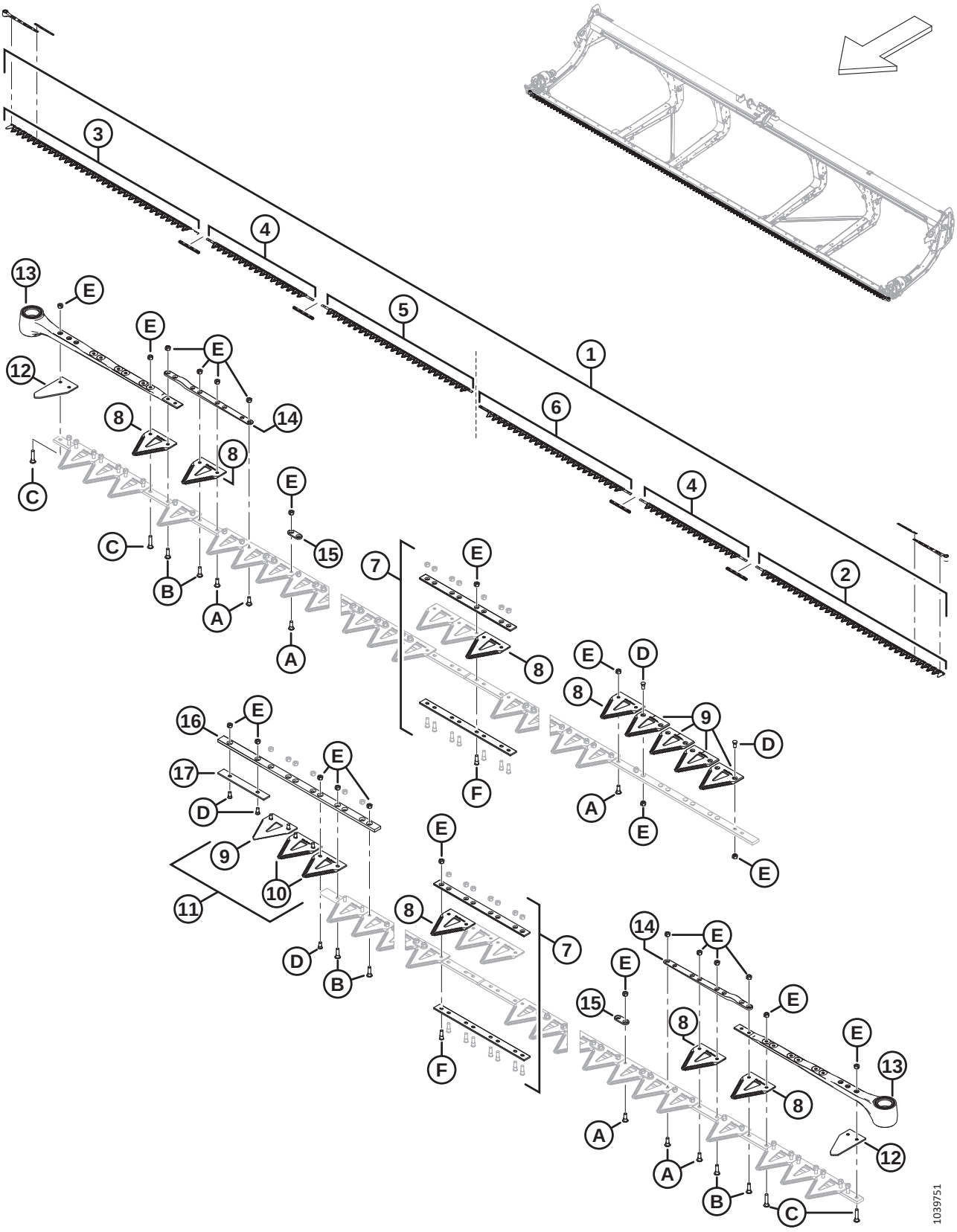

KNIVES – DOUBLE-KNIFE HEADERS, COARSE-TOOTH SECTIONS (D241)

Ref	Part Number	Description	Qty	Serial Number
1	MAC286888	KIT – KNIFE 41 FT DK COARSE [66]	1	
2	MAC286562	KNIFE – HEAD SEGMENT LH COARSE 2676 MM	1	
3	MAC286563	KNIFE – HEAD SEGMENT RH COARSE 2676 MM	1	
4	MAC286565	KNIFE – CENTER SEGMENT COARSE 1520 MM	2	
5	MAC286866	KNIFE – TAIL SEGMENT RH COARSE 2147 MM	1	
6	MAC286576	KNIFE – TAIL SEGMENT LH COARSE 2161 MM	1	
7	MAC286493	KIT – KNIFE SPLICE [67]	4	
8	MAC286461	SECTION – CLEARCUT COARSE (25 PACK)		
	MAC286462	SECTION – CLEARCUT FINE (25 PACK)	OPT	
	MAC286627	SECTION – CLEARCUT ULTRA COARSE (25 PACK)	OPT	
9	MAC286463	SECTION – CLEARCUT COARSE TOP CSK (10 PACK)		
	MAC286465	SECTION – CLEARCUT FINE TOP CSK (10 PACK)	OPT	
	MAC286628	SECTION – CLEARCUT ULTRA COARSE TOP CSK (10 PACK)	OPT	
10	MAC286464	SECTION – CLEARCUT COARSE BOTTOM CSK (10 PACK)		
	MAC286466	SECTION – CLEARCUT FINE BOTTOM CSK (10 PACK)	OPT	
	MAC286629	SECTION – CLEARCUT ULTRA COARSE BOTTOM CSK (10 PACK)	OPT	
11	MAC286861	KIT – CLEARCUT COARSE CENTER [68]		
	MAC286862	KIT – CLEARCUT FINE CENTER [69]	OPT	
	MAC286863	KIT – CLEARCUT ULTRA COARSE CENTER [70]	OPT	
12	MAC226983	SECTION – END	2	

66. The kit includes one ClearCut coarse section, 25 pack (MAC286461), four knife splice kits (MAC286493), one LH coarse knife head segment (MAC286562), one RH coarse knife head segment (MAC286563), two center coarse knife segments (MAC286565), one RH tail coarse knife segment (MAC286866), and one LH tail coarse knife segment (MAC286576).
67. The kit includes bottom splice bar (NSS), top splice bar (NSS), eight screws (MAC286314), and eight nuts (MAC226259).
68. The kit includes five ClearCut coarse top CSK sections (NSS), two ClearCut coarse bottom CSK sections (NSS), and hardware.
69. The kit includes five ClearCut fine top CSK sections (NSS), two ClearCut fine bottom CSK sections (NSS), and hardware.
70. The kit includes five ClearCut ultra coarse top CSK sections (NSS), two ClearCut ultra coarse bottom CSK sections (NSS), and hardware.

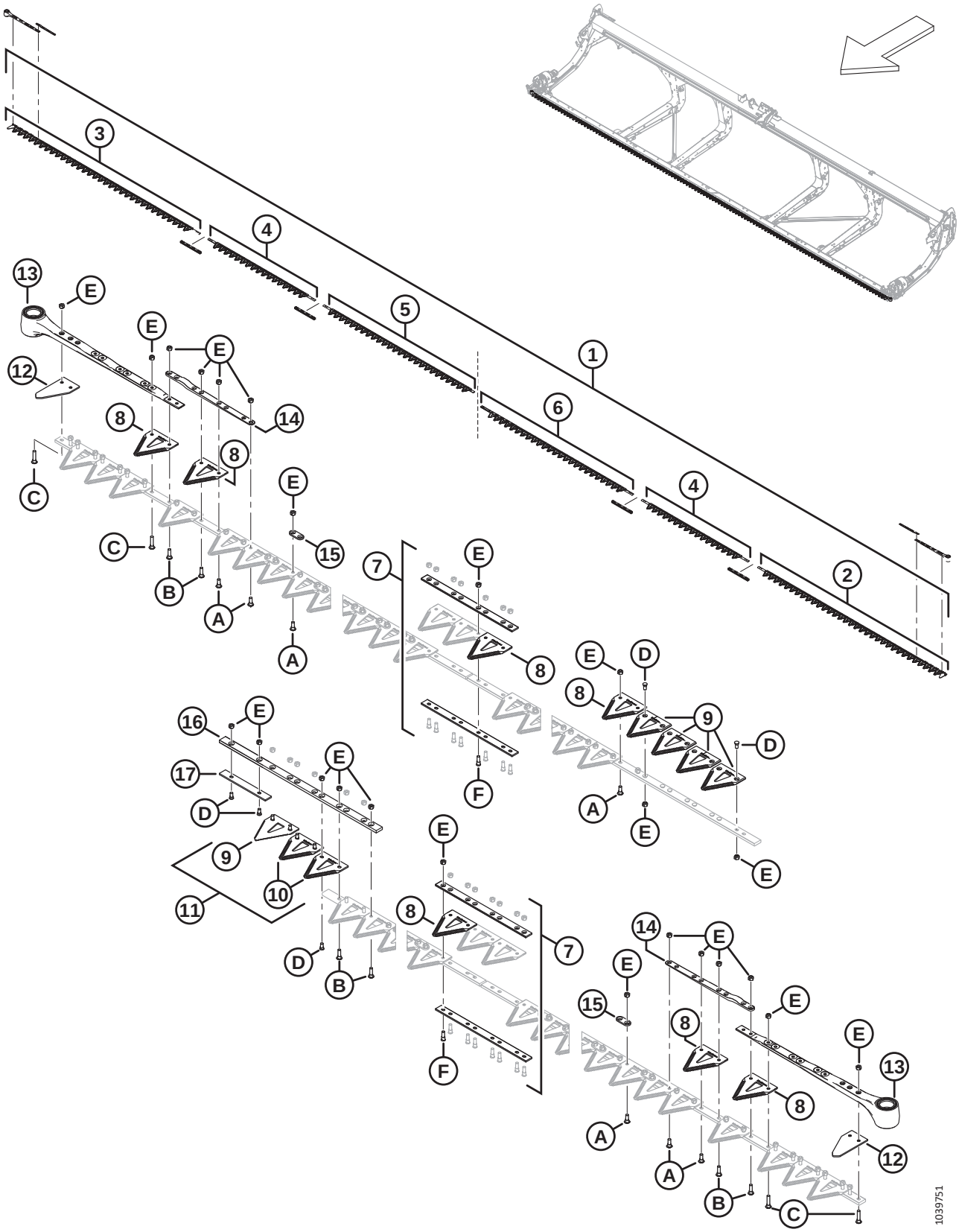
1039751

Ref	Part Number	Description	Qty	Serial Number
13	MAC226941	KNIFE HEAD ASSEMBLY	2	
	MAC115670	O-RING – 1.78 X 34.64		
	MAC113937	DISC		
	MAC113222	SEAL KIT		
	MAC100500	BEARING – NEEDLE		
14	MAC286440	BAR – FORGED	2	
15	MAC286481	BAR – REINFORCEMENT (25 PACK)	2	
16	MAC286362	BAR – KNIFE OVERLAP GUIDE	1	
17	MAC286363	BAR – WEAR	1	
A	MAC286475	SCREW – M6 X 18 MM, C/W NUT (50 PACK)		
B	MAC286476	SCREW – M6 X 22 MM, C/W NUT (25 PACK)		
C	MAC286477	SCREW – M6 X 29 MM, C/W NUT (25 PACK)		
D	MAC286478	SCREW – CSK M6 X 14 MM, C/W NUT (25 PACK)		
E	MAC286479	NUT – CTR LOC CSK M6 X 1 (50 PACK)		
F	MAC286621	SCREW – CSK M6 X 22 MM, C/W NUT (25 PACK)		

29 Knives – Double-Knife Headers, Coarse-Tooth Sections (D245)

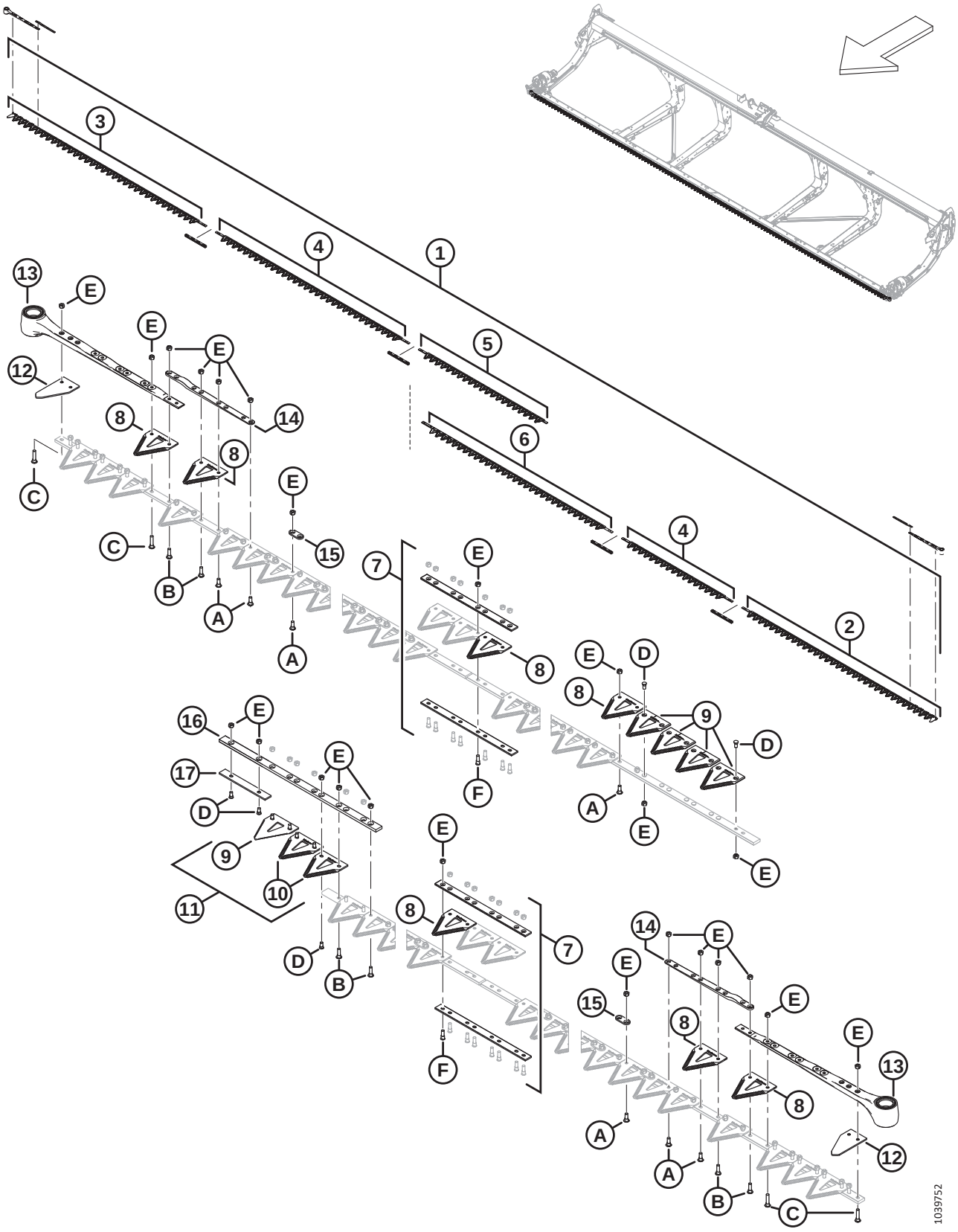

KNIVES – DOUBLE-KNIFE HEADERS, COARSE-TOOTH SECTIONS (D245)

Ref	Part Number	Description	Qty	Serial Number
1	MAC286889	KIT – KNIFE 45 FT DK COARSE [71]	1	
2	MAC286562	KNIFE – HEAD SEGMENT LH COARSE 2676 MM	1	
3	MAC286563	KNIFE – HEAD SEGMENT RH COARSE 2676 MM	1	
4	MAC286564	KNIFE – CENTER SEGMENT COARSE 2663 MM	1	
	MAC286565	KNIFE – CENTER SEGMENT COARSE 1520 MM	1	
5	MAC286867	KNIFE – TAIL SEGMENT RH COARSE 1766 MM	1	
6	MAC286575	KNIFE – TAIL SEGMENT LH COARSE 2618 MM	1	
7	MAC286493	KIT – KNIFE SPLICE [72]	4	
8	MAC286461	SECTION – CLEARCUT COARSE (25 PACK)		
	MAC286462	SECTION – CLEARCUT FINE (25 PACK)	OPT	
	MAC286627	SECTION – CLEARCUT ULTRA COARSE (25 PACK)	OPT	
9	MAC286463	SECTION – CLEARCUT COARSE TOP CSK (10 PACK)		
	MAC286465	SECTION – CLEARCUT FINE TOP CSK (10 PACK)	OPT	
	MAC286628	SECTION – CLEARCUT ULTRA COARSE TOP CSK (10 PACK)	OPT	
10	MAC286464	SECTION – CLEARCUT COARSE BOTTOM CSK (10 PACK)		
	MAC286466	SECTION – CLEARCUT FINE BOTTOM CSK (10 PACK)	OPT	
	MAC286629	SECTION – CLEARCUT ULTRA COARSE BOTTOM CSK (10 PACK)	OPT	
11	MAC286861	KIT – CLEARCUT COARSE CENTER [73]		
	MAC286862	KIT – CLEARCUT FINE CENTER [74]	OPT	
	MAC286863	KIT – CLEARCUT ULTRA COARSE CENTER [75]	OPT	
12	MAC226983	SECTION – END	2	

71. The kit includes one ClearCut coarse section, 25 pack (MAC286461), four knife splice kits (MAC286493), one LH coarse knife head segment (MAC286562), one RH coarse knife head segment (MAC286563), one center coarse knife segment (2663 mm) (MAC286564), one center coarse knife segment (1520 mm) (MAC286565), one RH tail coarse knife segment (MAC286867), and one LH tail coarse knife segment (MAC286575).
72. The kit includes bottom splice bar (NSS), top splice bar (NSS), eight screws (MAC286314), and eight nuts (MAC226259).
73. The kit includes five ClearCut coarse top CSK sections (NSS), two ClearCut coarse bottom CSK sections (NSS), and hardware.
74. The kit includes five ClearCut fine top CSK sections (NSS), two ClearCut fine bottom CSK sections (NSS), and hardware.
75. The kit includes five ClearCut ultra coarse top CSK sections (NSS), two ClearCut ultra coarse bottom CSK sections (NSS), and hardware.

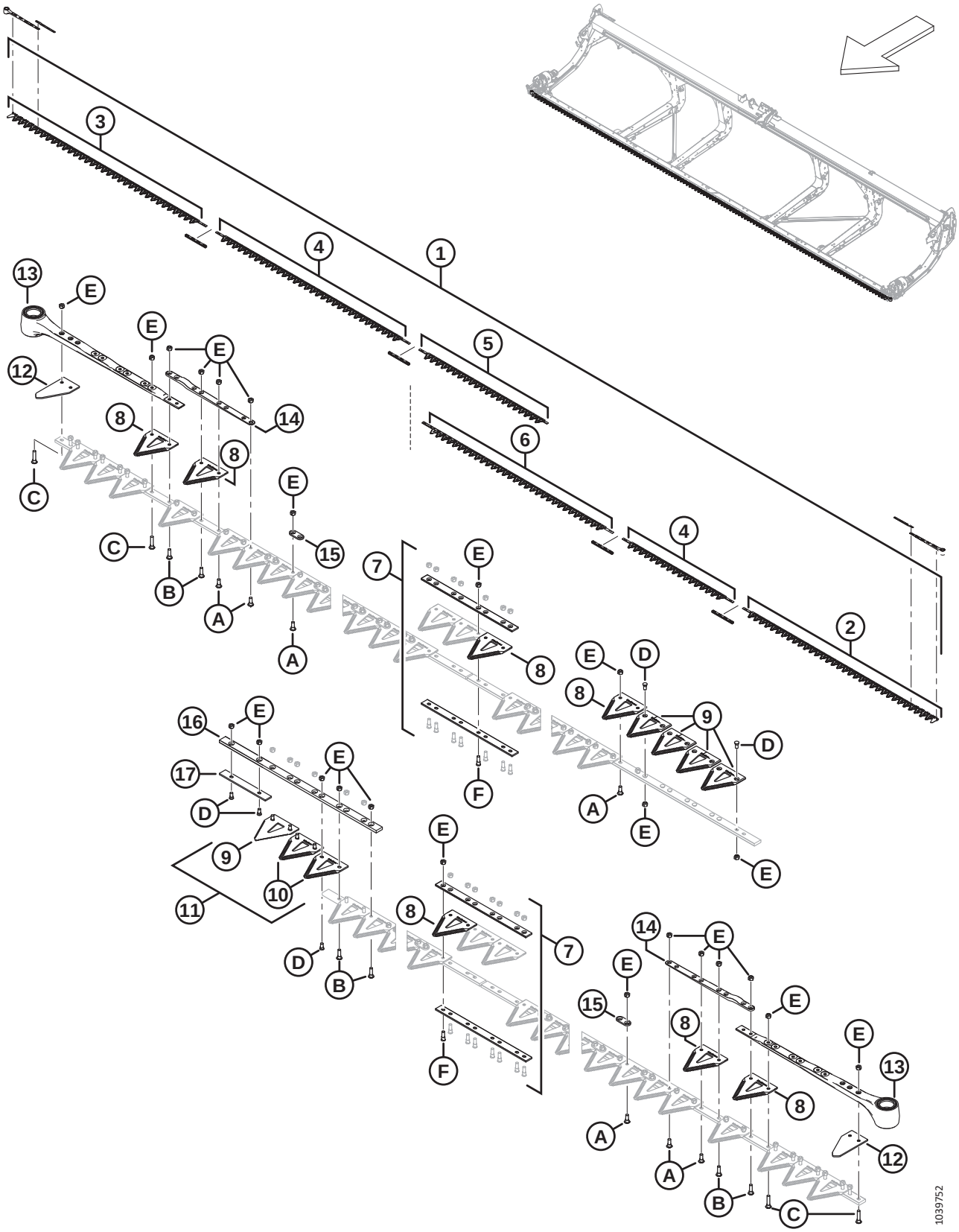
1039752

KNIVES – DOUBLE-KNIFE HEADERS, COARSE-TOOTH SECTIONS (D245)

Ref	Part Number	Description	Qty	Serial Number
13	MAC226941	KNIFE HEAD ASSEMBLY	2	
	MAC115670	O-RING – 1.78 X 34.64		
	MAC113937	DISC		
	MAC113222	SEAL KIT		
	MAC100500	BEARING – NEEDLE		
14	MAC286440	BAR – FORGED	2	
15	MAC286481	BAR – REINFORCEMENT (25 PACK)	2	
16	MAC286362	BAR – KNIFE OVERLAP GUIDE	1	
17	MAC286363	BAR – WEAR	1	
A	MAC286475	SCREW – M6 X 18 MM, C/W NUT (50 PACK)		
B	MAC286476	SCREW – M6 X 22 MM, C/W NUT (25 PACK)		
C	MAC286477	SCREW – M6 X 29 MM, C/W NUT (25 PACK)		
D	MAC286478	SCREW – CSK M6 X 14 MM, C/W NUT (25 PACK)		
E	MAC286479	NUT – CTR LOC CSK M6 X 1 (50 PACK)		
F	MAC286621	SCREW – CSK M6 X 22 MM, C/W NUT (25 PACK)		

30 Knife Drive – Single and Double Knife

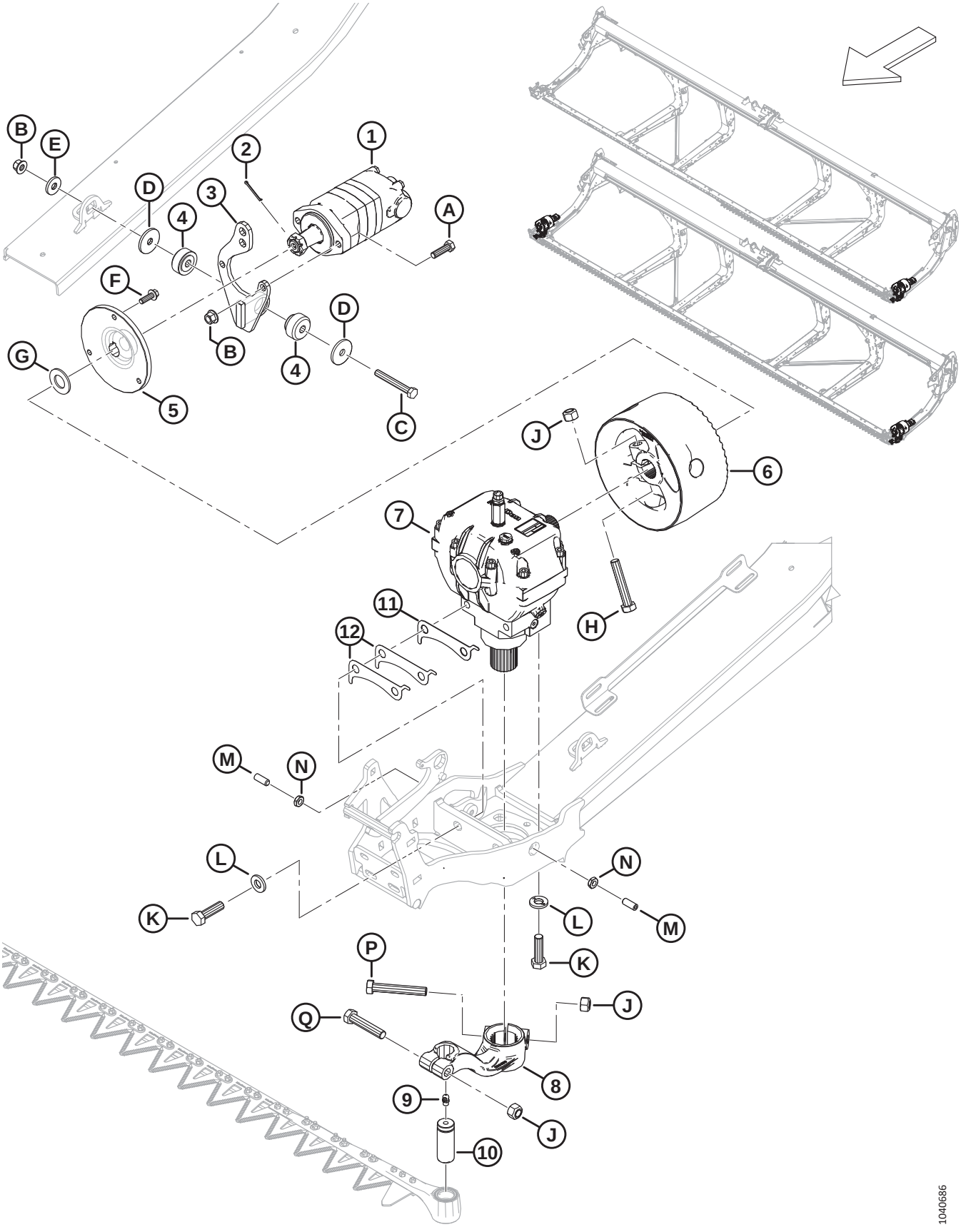

Ref	Part Number	Description	Qty	Serial Number
1	MAC283002	MOTOR – EATON 2000 100 CC [76]	1	
	MAC174304	SEAL KIT – EATON 2000 MOTOR		
	MAC137375	NUT – SLTD JAM 1.0 -20 UNEF		
2	MAC18606	PIN – COTTER 1/8 DIA X 1.5 ZP	1	
3	MAC286354	SUPPORT – WELDT SAE-A MOTOR	1	
4	MAC143107	BUSHING – RUBBER [77]	1	
5	MAC286087	HUB – MACHINED	1	
6	MAC286703	FLYWHEEL – KNIFE DRIVE C/W DECAL	1	
7	MAC286089	DRIVE – KNIFE [78]	1	
8	MAC226926	ARM – LH KNIFE DRIVE C/W DECAL	1	
	MAC226927	ARM – RH KNIFE DRIVE C/W DECAL (DOUBLE KNIFE ONLY)	1	
9	MAC21194	FITTING – LUBRICATION 90° 1/8 NPT	1	
10	MAC113229	PIN – SICKLE HEAD	1	
11	MAC226400	SHIM – KNIFE DRIVE BOX, 1.2 MM [79]		
12	MAC360870	SHIM – KNIFE DRIVE BOX, 0.6 MM [79]		
A	MAC184669	BOLT – HEX HD M12 X 1.75 X 40-8.8-AA1J	2	
B	MAC136431	NUT – HEX FLG CTR LOC M12 X 1.75-10	3	
C	MAC184673	BOLT – HEX HD M12 X 1.75 X 90-10.9-AA1J	1	
D	MAC11695	WASHER – FLAT	2	
E	MAC4761	WASHER – FLAT	1	
F	MAC184665	BOLT – HEX FLG HD M10 X 1.5 X 30-10.9-AA1J	3	
G	MAC18603	WASHER – FLAT SAE 1 1/16 ID X 2.0 IN OD AA1J	1	
H	MAC320214	BOLT – HEX HD M16 X 2 X 90-10.9-ZINC	1	
J	MAC320026	NUT – HEX TOP LOCK M16 X 2-10-ZINC	3	
K	MAC320311	BOLT – HEX HD M16 X 2 X 55-12.9-ZINC	4	
L	MAC120901	WASHER – HARD L9 SPCL 5/8-82/85 HR 15N-AB0C	4	

76. Motor includes seal kit (MAC174304), key, and slotted nut (MAC137375).
77. The rubber bushing (MAC143107) includes both halves shown in the illustration.
78. For repair parts, refer to Section *31 Knife Drive Box, page 75*.
79. Shim quantity varies for assembly clearances. Maximum allowable shims is four 1.2 mm shims (MAC226400) (or three 1.2 mm shims and two 0.6 mm shims [MAC360870]).

KNIFE DRIVE – SINGLE AND DOUBLE KNIFE

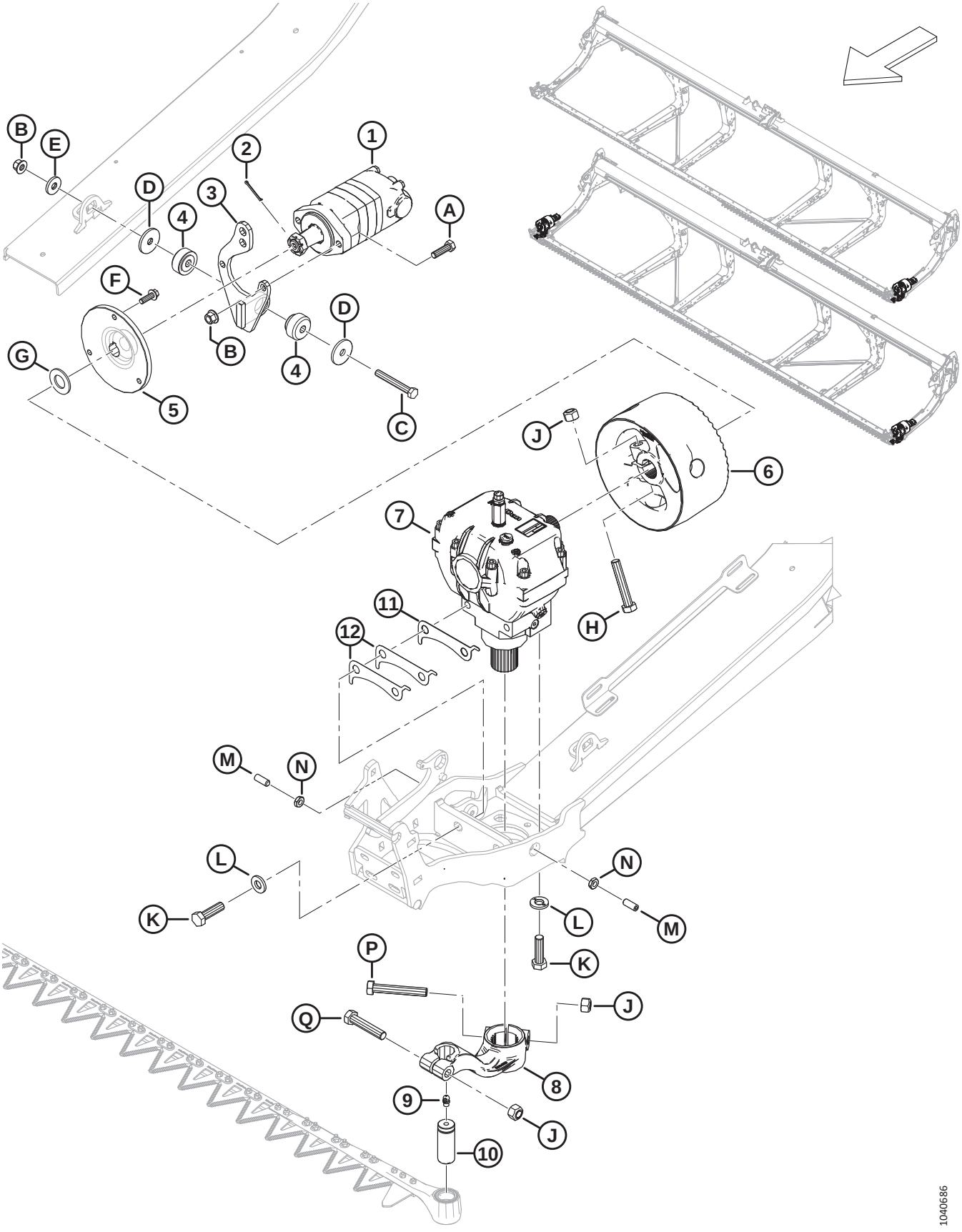

Ref	Part Number	Description	Qty	Serial Number
M	MAC320089	SCREW – SET M12 X 1.75 X 30 [80]	2	
N	MAC184696	NUT – HEX THIN M12 X 1.75-05-AA1J	2	
P	MAC320215	BOLT – HEX HD M16 X 2 X 100-10.9-ZINC	1	
Q	MAC152602	BOLT – HEX HD M16 X 2 X 80-10.9-AA1J	1	

80. Set screw is used to adjust knife drive (MAC286089) left to right within the specified tolerance. Tighten lock nut (MAC184696) once knife drive has been adjusted correctly.

31 Knife Drive Box

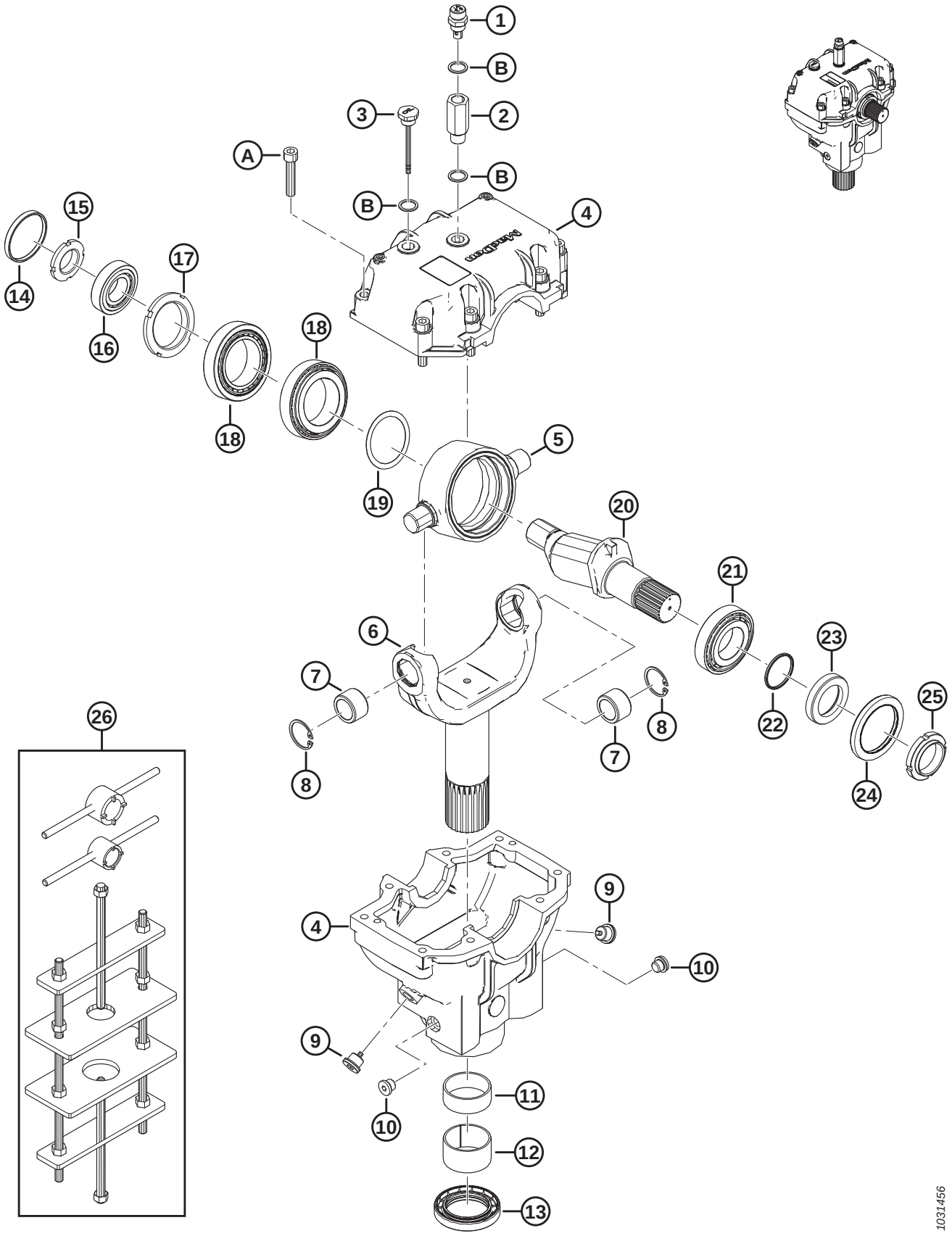

KNIFE DRIVE BOX

Ref	Part Number	Description	Qty	Serial Number
	MAC286089	DRIVE – KNIFE		
1	MAC286489	PLUG – BREATHER	1	
2	MAC257089	EXTENSION	1	
3	MAC286490	PLUG – LEVEL	1	
4	MAC286485	CASTING – KNIFE DRIVE BOX [81]	1	
5	MAC100721	PIVOT	1	
6	MAC286483	YOKE	1	
7	MAC100723	BUSHING – BRONZE	2	
8	MAC100722	RING – RETAINING INTERNAL	2	
9	MAC286488	PLUG – DRAIN	2	
10	MAC252423	PLUG – DRAIN	2	
11	MAC100726	BUSHING – STEEL	1	
12	MAC286486	BUSHING – STEEL	1	
13	MAC286445	SEAL – OIL	1	
14	MAC100719	CAP – DUST	1	
15	MAC100718	NUT – SPECIAL LOCK M30 X 1.5 CLASS 8.8	1	
16	MAC100717	ASSSEMBLY – BEARING (CUP AND CONE)	1	
17	MAC100715	NUT – SPECIAL LOCK M55 X 2 CLASS 8.8	1	
18	MAC100720	ASSEMBLY – BEARING (CUP AND CONE)	2	
19	MAC113152	KIT – SHIM	1	
20	MAC100710	SHAFT	1	
21	MAC100714	BEARING – ASSEMBLY CUP AND CONE	1	
22	MAC100712	O-RING – 2.62 X 40.95	1	
23	MAC102629	SPACER	1	
24	MAC102630	SEAL – OIL (DOUBLE LIP)	1	
25	MAC100709	NUT – SPECIAL M40 X 1.5 CLASS 8.8	1	
26	MAC139003	KIT – WOBBLE BOX TOOL [82]	A/R	

81. Knife drive box casting Includes top and bottom knife drive box castings and eight screws (MAC113153).
82. The kit includes large socket tool, small socket tool, and wobble box jig frame.

KNIFE DRIVE BOX

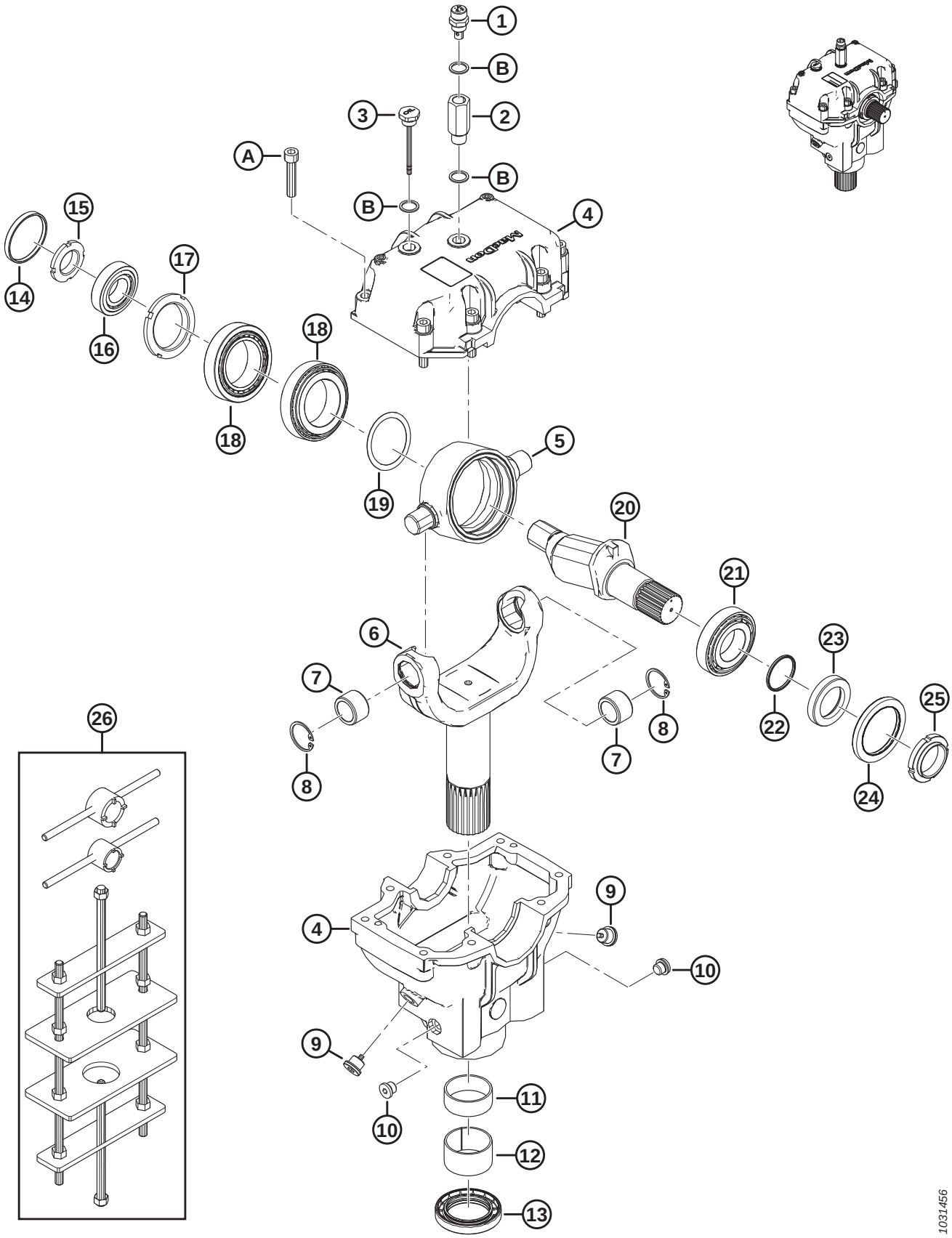

KNIFE DRIVE BOX

Ref	Part Number	Description	Qty	Serial Number
A	MAC113153	SCREW – HEX SOC HD M10 X 1.5 X 50-8.8-BO		
B	MAC257054	WASHER – COPPER		

32 Reel Support Arm and Lift Cylinders – Center Arm, Double Reel

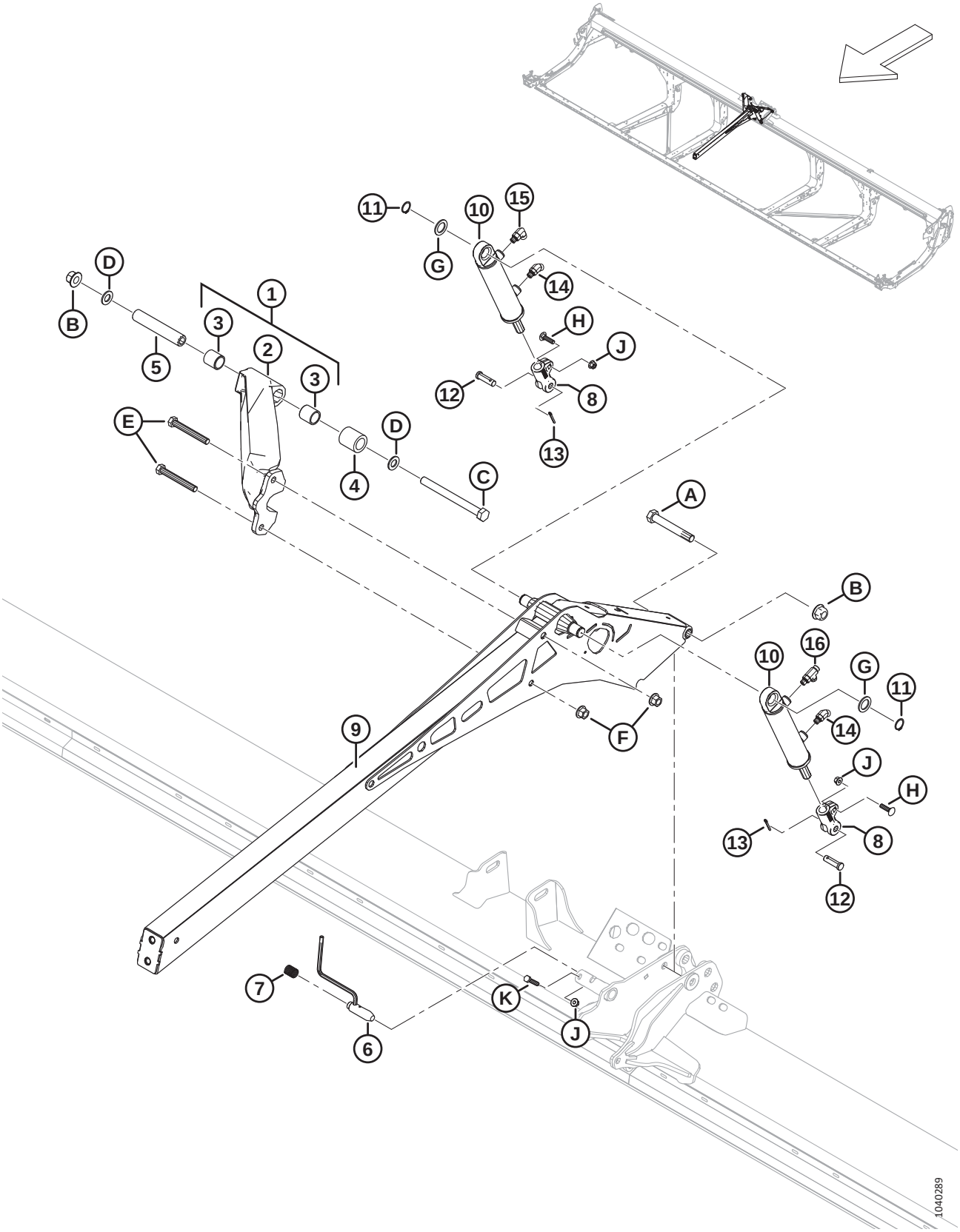

REEL SUPPORT ARM AND LIFT CYLINDERS – CENTER ARM, DOUBLE REEL

Ref	Part Number	Description	Qty	Serial Number
1	MAC311627	BRACE – SUB ASSY C/W BUSHINGS [83]	1	
2	MAC273798	BRACE – MACHINED	1	
3	MAC311613	BUSHING	2	
4	MAC311612	SPACER – BRACE REEL PIVOT	1	
5	MAC311611	TUBE – PIVOT REEL BRACE	1	
6	MAC273680	WELDT – PIN	1	
7	MAC289880	SPRING – COMPRESSION	1	
8	MAC273860	CLEVIS – CYL END MACHINED	2	
9	MAC273795	ARM – CENTER WELDT	1	
10	MAC273790	CYLINDER – HYD	2	
	MAC311285	SEAL KIT		
11	MAC30144	RING – EXT RETAINING	2	
12	MAC18621	PIN – CLEVIS	2	
13	MAC18648	PIN – COTTER 3/16 DIA X 1.25 ZP	2	
14	MAC136144	FITTING – ELBOW 45° HYD	2	
	MAC50219	O-RING – 1.98 X 11.89		
	MAC135865	O-RING – 1.78 X 9.25		
15	MAC136095	FITTING – ELBOW 90° HYD	1	
	MAC50219	O-RING – 1.98 X 11.89		
	MAC135865	O-RING – 1.78 X 9.25		
16	MAC136240	FITTING – TEE HYD	1	
	MAC50219	O-RING – 1.98 X 11.89		
	MAC135865	O-RING – 1.78 X 9.25		
A	MAC320196	BOLT – HEX HD M20 X 2.5 X 140-SPCL-10.9-ZINC		
B	MAC136122	NUT – HEX FLG CTR LOC M20 X 2.5-10-AA1J		
C	MAC252581	BOLT – HEX HD M20 X 2.5 X 220-10.9-AA1J		
D	MAC136701	WASHER – NORDLOCK M20		
E	MAC320168	BOLT – HEX HD M16 X 2 X 125-8.8-ZINC		
F	MAC136440	NUT – HEX FLG CTR LK M16 X 2-10-AA1J		
G	MAC156178	WASHER – THRUST		

83. Includes machined brace (MAC273798) and two bushings (MAC311613).

REEL SUPPORT ARM AND LIFT CYLINDERS – CENTER ARM, DOUBLE REEL

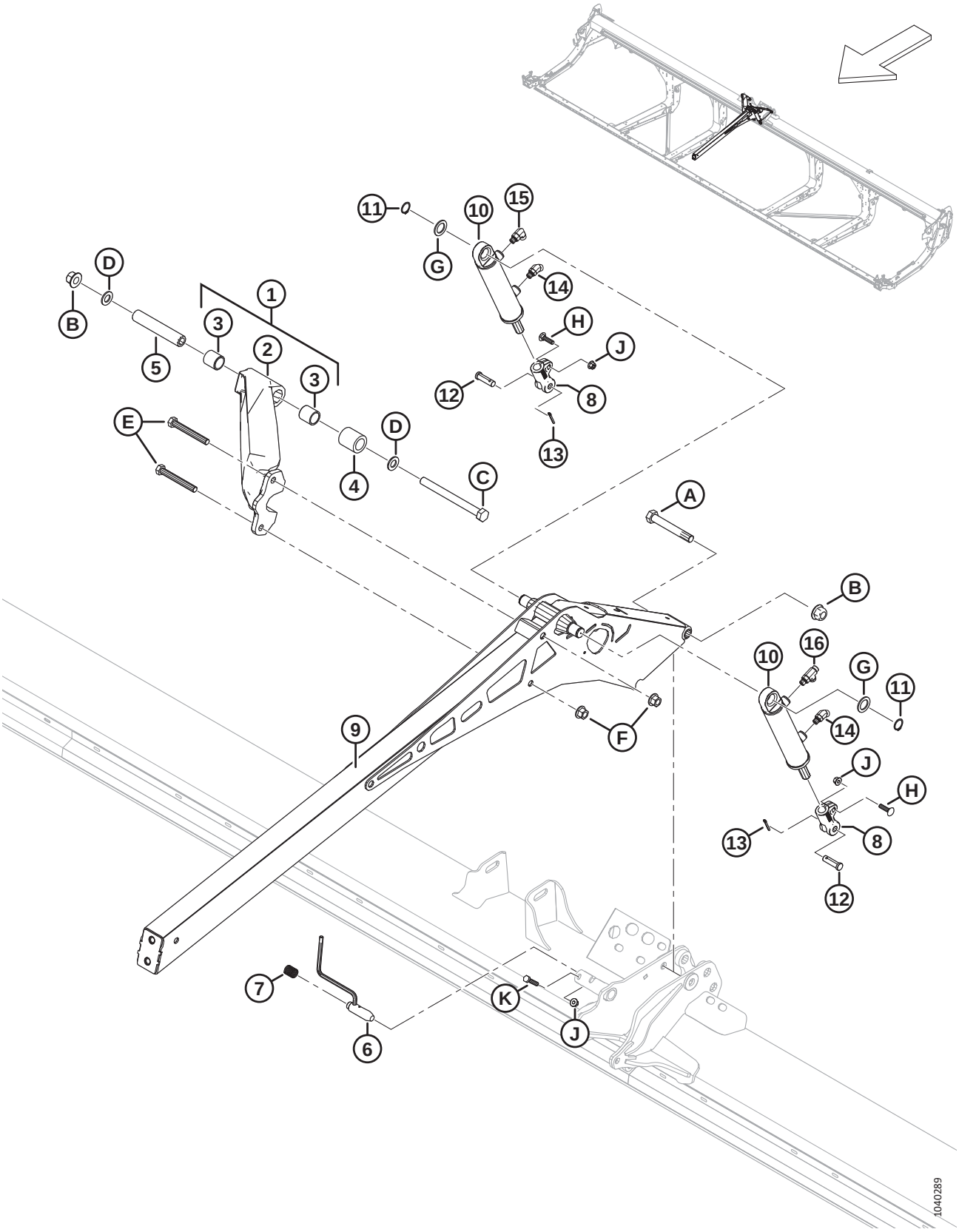

Ref	Part Number	Description	Qty	Serial Number
H	MAC152732	BOLT – RHSN M10 X 1.5 X 40-8.8-AA1J		
J	MAC135799	NUT – HEX FLG CTR LOC M10 X 1.5-10		
K	MAC30629	BOLT – HEX HD M10 X 1.5 X 50-8.8-A3L		

33 Reel Support Arm and Lift Cylinders – Outer Arms, Double Reel

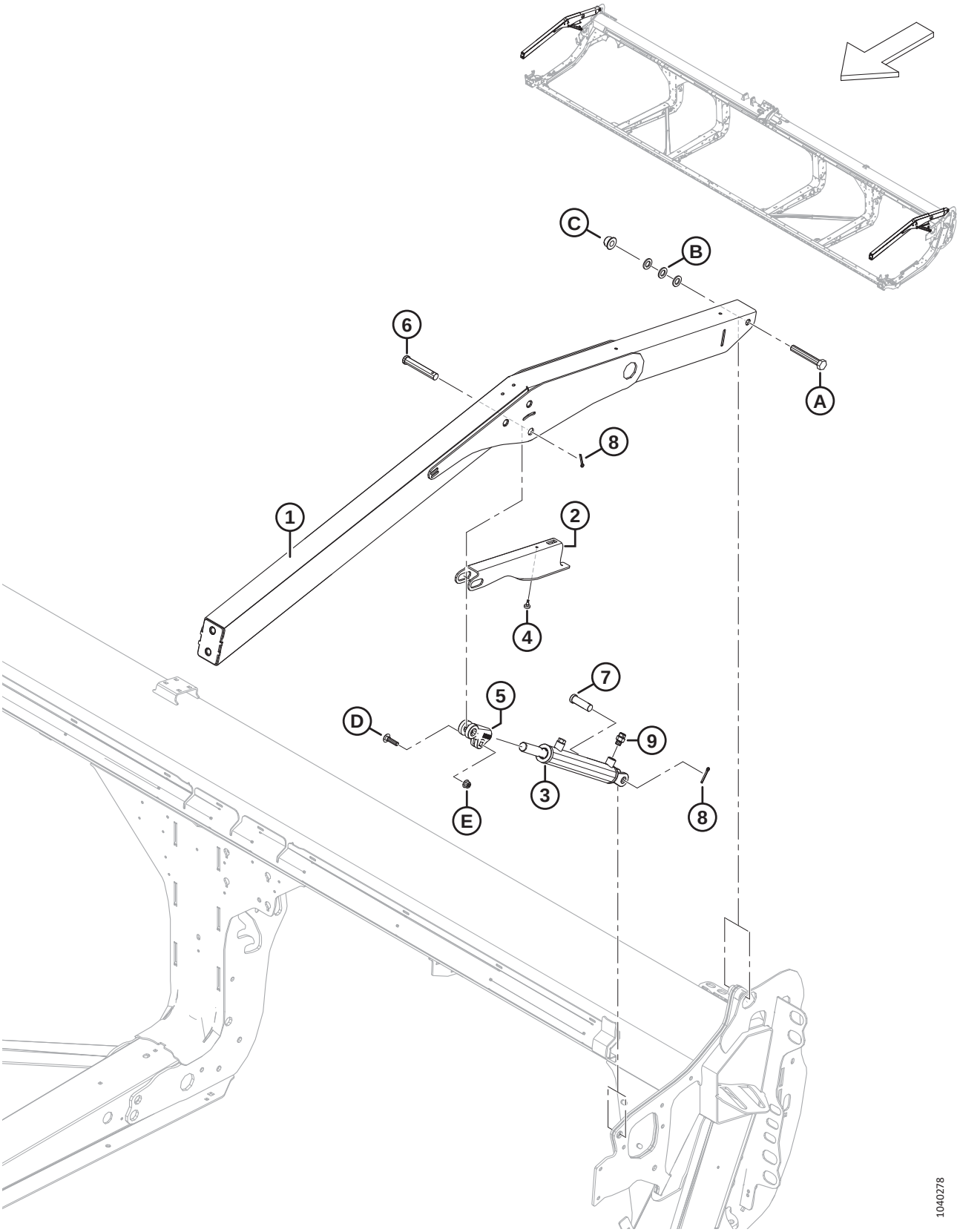

REEL SUPPORT ARM AND LIFT CYLINDERS – OUTER ARMS, DOUBLE REEL

Ref	Part Number	Description	Qty	Serial Number
1	MAC311949	ARM – OUTER W/ DECAL [84]	2	
2	MAC340191	SUPPORT – REEL PROP	2	
3	MAC273787	CYLINDER – HYD	2	
	MAC311284	SEAL KIT		
	MAC174879	BREATHER – ORB #6		
4	MAC273653	BUMPER – RUBBER	2	
5	MAC228338	CLEVIS – CYL END MACHINED	2	
6	MAC18629	PIN – CLEVIS	2	
7	MAC18626	PIN – CLEVIS	2	
8	MAC18648	PIN – COTTER 3/16 DIA X 1.25 ZP	4	
9	MAC135778	FITTING – ADAPTER	2	
	MAC50219	O-RING – 1.98 X 11.89		
	MAC135865	O-RING – 1.78 X 9.25		
A	MAC136310	BOLT – HEX HD M16 X 2 X 105-SPCL-8.8-AA1J		
B	MAC184717	WASHER – FLAT REG M16-200HV-AA1J		
C	MAC152520	NUT – HEX FLG TECH LK M16 X 2-10-AA1J		
D	MAC152732	BOLT – RHSN M10 X 1.5 X 40-8.8-AA1J		
E	MAC135799	NUT – HEX FLG CTR LOC M10 X 1.5-10		

84. Arm includes two reel entanglement hazard decals (MAC360541).

34 Reel Support Arm and Lift Cylinders – Outer Arms, Single Reel

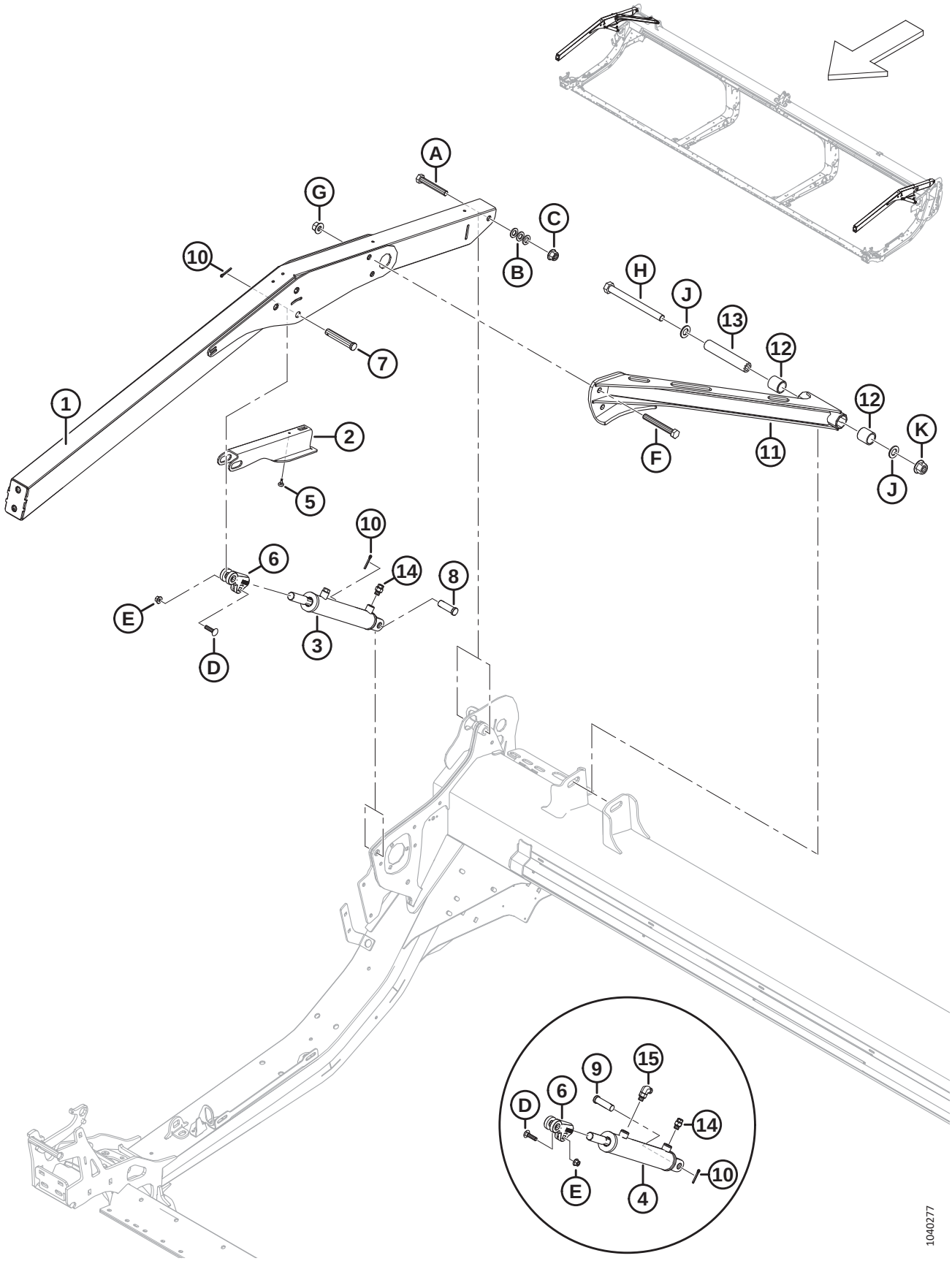

REEL SUPPORT ARM AND LIFT CYLINDERS – OUTER ARMS, SINGLE REEL

Ref	Part Number	Description	Qty	Serial Number
1	MAC360035	ASSY – SR OUTER ARM W/ DECAL [85]	2	
2	MAC340191	SUPPORT – REEL PROP	2	
3	MAC273788	CYLINDER – HYD (RH) [86]	1	
	MAC323687	SEAL KIT		
	MAC174879	BREATHER – ORB #6		
4	MAC273789	CYLINDER – HYD (LH) [86]	1	
	MAC323688	SEAL KIT		
5	MAC273653	BUMPER – RUBBER	2	
6	MAC228338	CLEVIS – CYL END MACHINED	2	
7	MAC18629	PIN – CLEVIS	2	
8	MAC18626	PIN – CLEVIS (RH) [87]	1	
9	MAC322970	PIN – CLEVIS 3/4 X 1-31/32 (LH) [87]	1	
10	MAC18648	PIN – COTTER 3/16 DIA X 1.25 ZP	4	
11	MAC340648	BRACE – SR W/ BUSHINGS [88]	1	
12	MAC311613	BUSHING	2	
13	MAC311611	TUBE – PIVOT REEL BRACE	1	
14	MAC135778	FITTING – ADAPTER	2	
	MAC50219	O-RING – 1.98 X 11.89		
	MAC135865	O-RING – 1.78 X 9.25		
15	MAC136095	FITTING – ELBOW 90° HYD [89]	1	
	MAC50219	O-RING – 1.98 X 11.89		
	MAC135865	O-RING – 1.78 X 9.25		
A	MAC136310	BOLT – HEX HD M16 X 2 X 105-SPCL-8.8-AA1J		
B	MAC184717	WASHER – FLAT REG M16-200HV-AA1J		
C	MAC152520	NUT – HEX FLG TECH LK M16 X 2-10-AA1J		
D	MAC152732	BOLT – RHSN M10 X 1.5 X 40-8.8-AA1J		
E	MAC135799	NUT – HEX FLG CTR LOC M10 X 1.5-10		

85. Arm includes two reel entanglement hazard decals (MAC360541).
86. For RH cylinder (MAC273788), order seal kit (MAC323687); for LH cylinder (MAC273789), order seal kit (MAC323688).
87. To secure the RH cylinder to the right endsheet, use clevis pin (MAC18626); to secure the LH cylinder to the left endsheet, use clevis pin (MAC322970).
88. The brace includes two bushings (MAC311613).
89. Used on the left cylinder only.

REEL SUPPORT ARM AND LIFT CYLINDERS – OUTER ARMS, SINGLE REEL

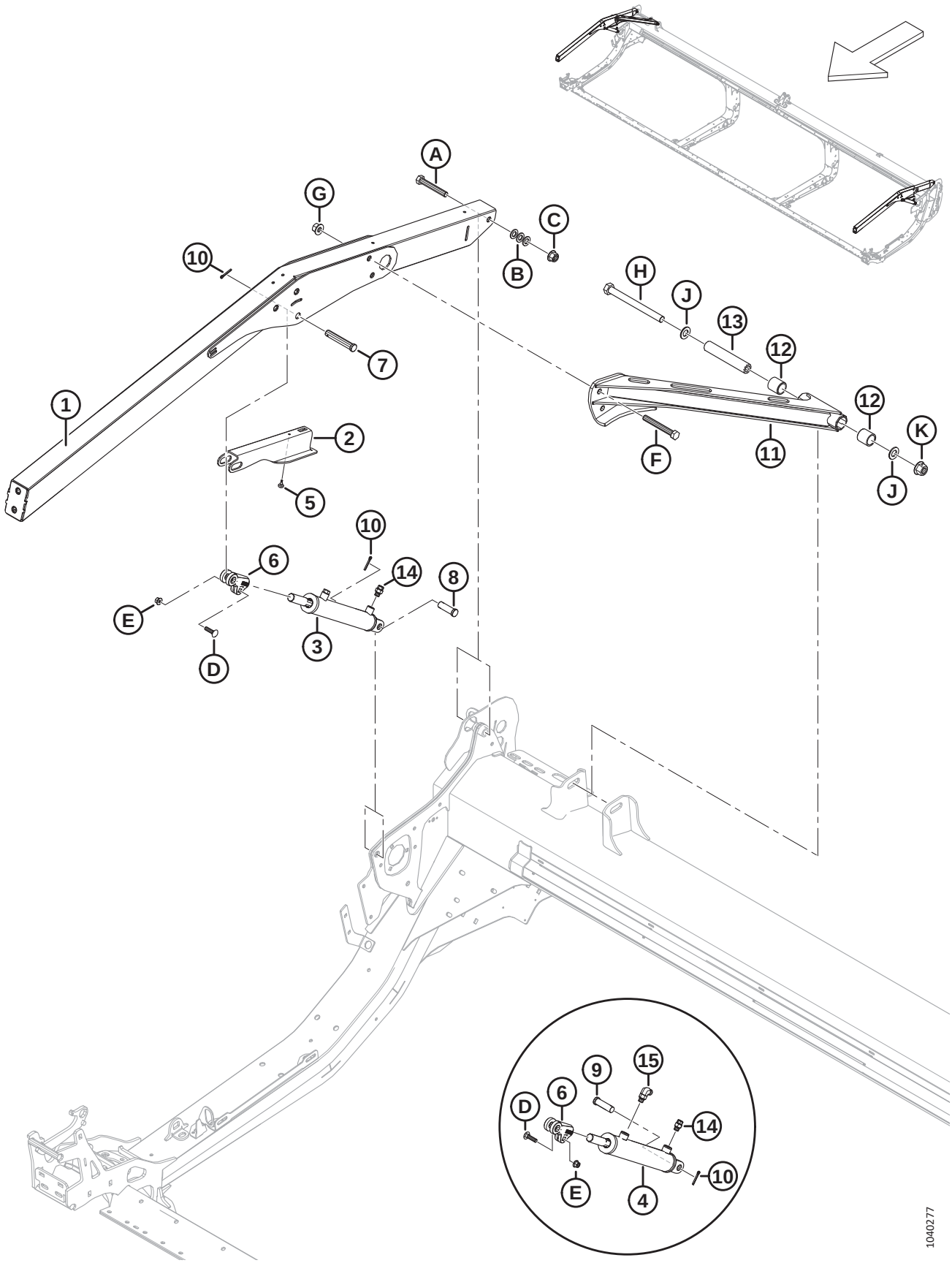

Ref	Part Number	Description	Qty	Serial Number
F	MAC320168	BOLT – HEX HD M16 X 2 X 125-8.8-AA1J		
G	MAC136440	NUT – HEX FLG CTR LK M16 X 2-10-AA1J		
H	MAC252581	BOLT – HEX HD M20 X 2.5 X 220-10.9-AA1J		
J	MAC136701	WASHER – NORDLOCK M20		
K	MAC136122	NUT – HEX FLG CTR LOC M20 X 2.5-10-AA1J		

35 Reel Arm Components – Right Arm, Single Reel

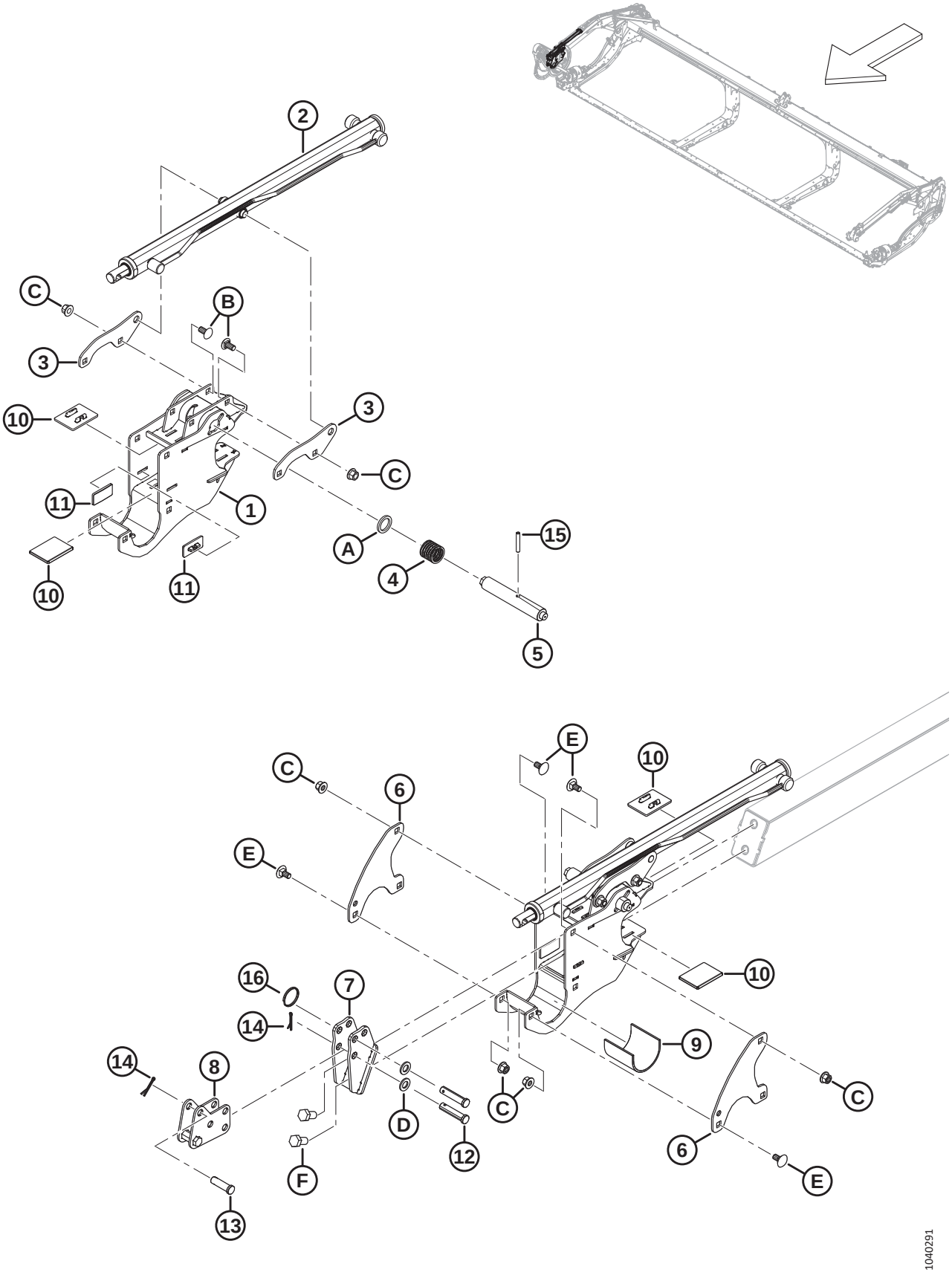

REEL ARM COMPONENTS – RIGHT ARM, SINGLE REEL

Ref	Part Number	Description	Qty	Serial Number
1	MAC340224	SUPPORT – REEL C/W DECAL	1	
2	MAC273283	CYLINDER – FORE AFT [90]	1	
	MAC313964	SEAL KIT		
3	MAC273138	LUG	2	
4	MAC273861	SPRING – COMP - LEFT HAND HELIX	1	
5	MAC273278	PIN – CAM LATCH, DRIVES RH	1	
6	MAC273122	PLATE – REEL RETAINER	2	
7	MAC311237	SUPPORT – FRONT ANCHOR WELDT	1	
8	MAC311238	ANCHOR – FORE AFT SUB WELDT	1	
9	MAC228381	SLEEVE – REEL HUB SUPPORT	1	
10	MAC273831	PAD – REEL DRIVE WEAR	4	
11	MAC273777	PAD – REEL DRIVE WEAR	2	
12	MAC18704	PIN – CLEVIS, 15 MM X 68 MM OAL	2	
13	MAC18621	PIN – CLEVIS, 15 MM X 50 MM OAL	1	
14	MAC18607	PIN – COTTER 5/32 DIA X 1.5 ZP	2	
15	MAC16681	PIN – SPRING 5/16 DIA X 2.0 LG	1	
16	MAC320207	RING – SPLIT	1	
A	MAC273304	WASHER – CAM LATCH		
B	MAC152439	BOLT – RHSSN M12 X 1.75 X 25-8.8-AA1J		
C	MAC136431	NUT – HEX FLG CTR LOC M12 X 1.75-10		
D	MAC184717	WASHER – FLAT REG M16-200HV-AA1J		
E	MAC135903	BOLT – RHSN M12 X 1.75 X 25-8.8-ZINC		
F	MAC136143	BOLT – HEX HD TFL M16 X 2 X 30-10.9-AA1J		

90. Right arm, single reel only.

36 Reel Arm Components – Right Arm, Double Reel

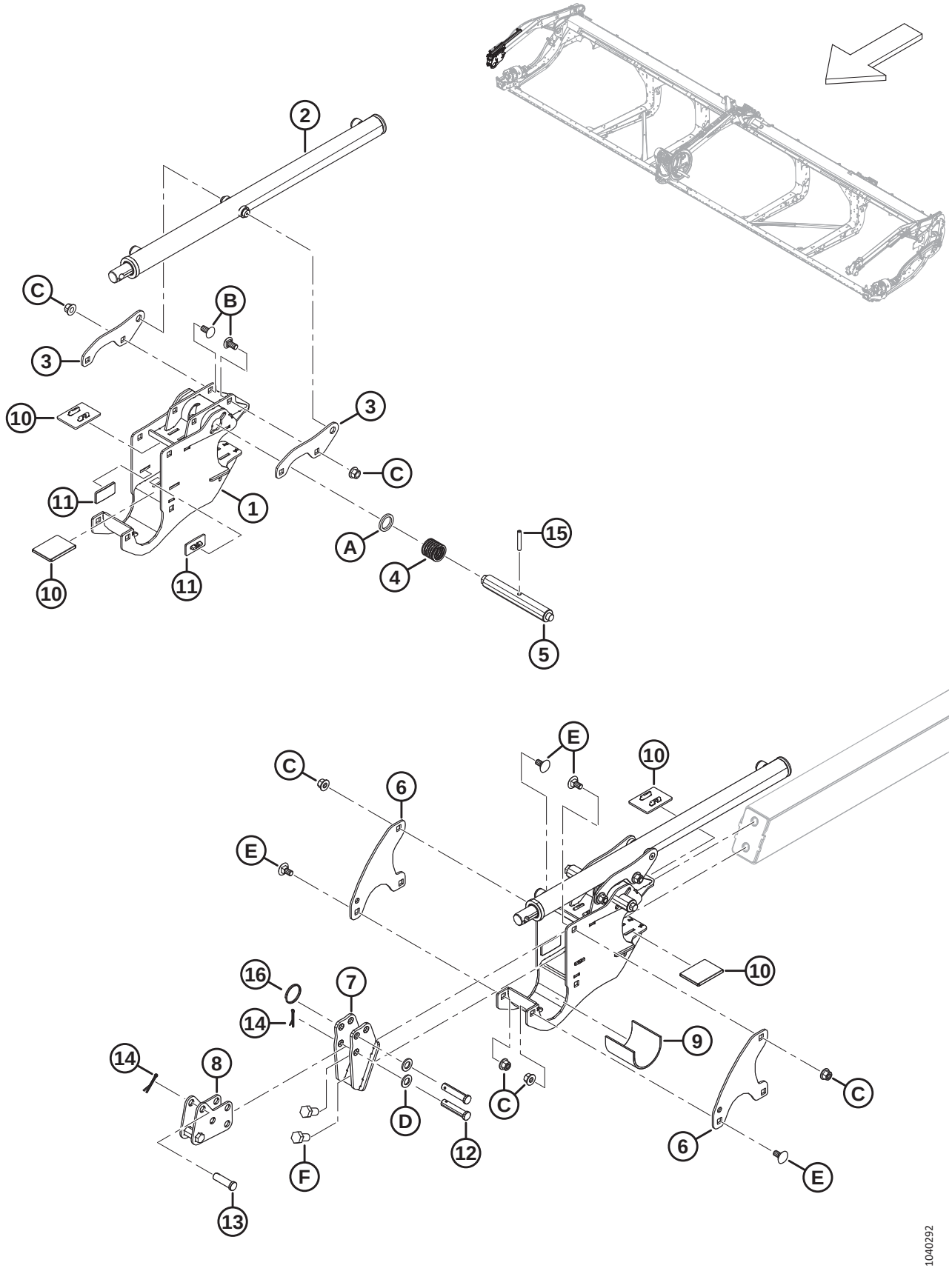

REEL ARM COMPONENTS – RIGHT ARM, DOUBLE REEL

Ref	Part Number	Description	Qty	Serial Number
1	MAC340224	SUPPORT – REEL CENTER C/W DECAL	1	
2	MAC273284	CYLINDER – FORE AFT (RIGHT ARM ONLY)	1	
	MAC313964	SEAL KIT		
3	MAC273138	LUG	2	
4	MAC273861	SPRING – COMP - LEFT HAND HELIX	1	
5	MAC273281	PIN – CAM LATCH RH CAMS	1	
6	MAC273122	PLATE – REEL RETAINER	2	
7	MAC311237	SUPPORT – FRONT ANCHOR WELDT	1	
8	MAC311238	ANCHOR – FORE AFT SUB WELDT	1	
9	MAC228381	SLEEVE – REEL HUB SUPPORT	1	
10	MAC273831	PAD – REEL DRIVE WEAR	4	
11	MAC273777	PAD – REEL DRIVE WEAR	2	
12	MAC18704	PIN – CLEVIS, 15 MM X 68 MM OAL	2	
13	MAC18621	PIN – CLEVIS, 15 MM X 50 MM OAL	1	
14	MAC18607	PIN – COTTER 5/32 DIA X 1.5 ZP	3	
15	MAC16681	PIN – SPRING 5/16 DIA X 2.0 LG	1	
16	MAC320207	RING – SPLIT	1	
A	MAC273304	WASHER – CAM LATCH		
B	MAC152439	BOLT – RHSSN M12 X 1.75 X 25-8.8-AA1J		
C	MAC136431	NUT – HEX FLG CTR LOC M12 X 1.75-10		
D	MAC184717	WASHER – FLAT REG M16-200HV-AA1J		
E	MAC135903	BOLT – RHSN M12 X 1.75 X 25-8.8-ZINC		
F	MAC136143	BOLT – HEX HD TFL M16 X 2 X 30-10.9-AA1J		

37 Reel Arm Components – Center Arm, Double Reel

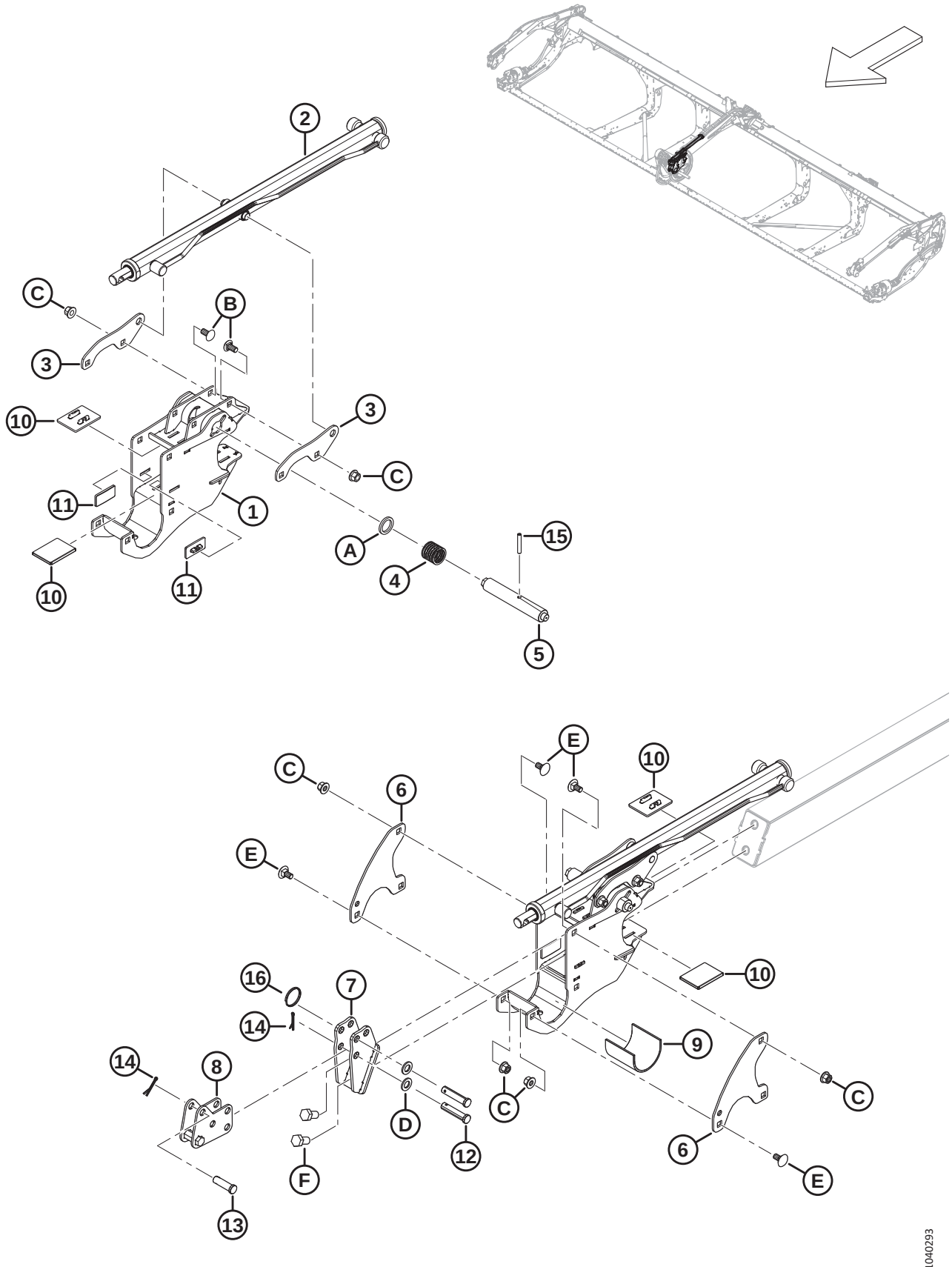

REEL ARM COMPONENTS – CENTER ARM, DOUBLE REEL

Ref	Part Number	Description	Qty	Serial Number
1	MAC340224	SUPPORT – REEL CENTER C/W DECAL	1	
2	MAC273283	CYLINDER – FORE AFT	1	
	MAC313964	SEAL KIT		
3	MAC273138	LUG	2	
4	MAC273861	SPRING – COMP - LEFT HAND HELIX	1	
5	MAC273278	PIN – CAM LATCH-DRIVES AND RH CTR	1	
6	MAC273122	PLATE – REEL RETAINER	2	
7	MAC311237	SUPPORT – FRONT ANCHOR WELDT	1	
8	MAC311238	ANCHOR – FORE AFT SUB WELDT	1	
9	MAC228381	SLEEVE – REEL HUB SUPPORT	1	
10	MAC273831	PAD – REEL DRIVE WEAR	4	
11	MAC273777	PAD – REEL DRIVE WEAR	2	
12	MAC18704	PIN – CLEVIS, 15 MM X 68 MM OAL	2	
13	MAC18621	PIN – CLEVIS, 15 MM X 50 MM OAL	1	
14	MAC18607	PIN – COTTER 5/32 DIA X 1.5 ZP	3	
15	MAC16681	PIN – SPRING 5/16 DIA X 2.0 LG	1	
16	MAC320207	RING – SPLIT	1	
A	MAC273304	WASHER – CAM LATCH		
B	MAC152439	BOLT – RHSSN M12 X 1.75 X 25-8.8-AA1J		
C	MAC136431	NUT – HEX FLG CTR LOC M12 X 1.75-10		
D	MAC184717	WASHER – FLAT REG M16-200HV-AA1J		
E	MAC135903	BOLT – RHSN M12 X 1.75 X 25-8.8-ZINC		
F	MAC136143	BOLT – HEX HD TFL M16 X 2 X 30-10.9-AA1J		

38 Reel Arm Components – Left Arm

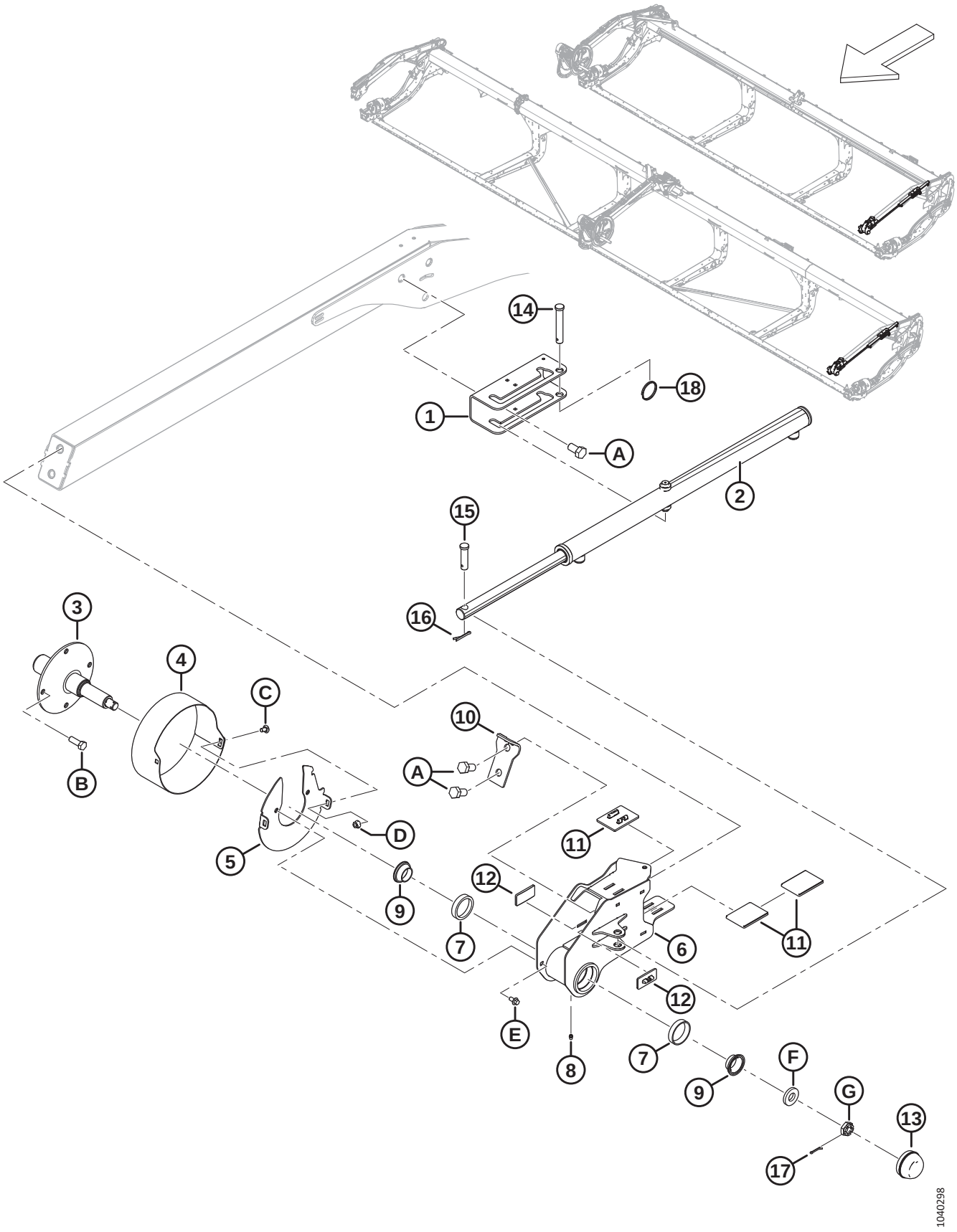

REEL ARM COMPONENTS – LEFT ARM

Ref	Part Number	Description	Qty	Serial Number
1	MAC273637	BRACKET – CYLINDER MOUNT	1	
2	MAC273284	CYLINDER – FORE AFT	1	
	MAC313964	SEAL KIT		
3	MAC228322	SHAFT – TAIL MACHINED	1	
4	MAC273309	SHIELD – LH REEL TAIL END	1	
5	MAC311632	DISC – WELDMENT	1	
6	MAC273772	TAIL END REEL SUPPORT – C/W CUPS [91]	1	
7	MAC164215	BEARING – CUP ROLLER	2	
8	MAC18671	FITTING – LUBE 1/4 - 28 UNF	1	
9	MAC164216	BEARING – CONE C/W SEAL	2	
10	MAC311359	PLATE – STOP REEL	1	
11	MAC273831	PAD – REEL DRIVE WEAR	3	
12	MAC273777	PAD – REEL DRIVE WEAR	2	
13	MAC30520	CAP – DUST	1	
14	MAC19958	PIN – CLEVIS	1	
15	MAC103879	PIN – CLEVIS	1	
16	MAC18607	PIN – COTTER 5/32 DIA X 1.5 ZP	2	
17	MAC18605	PIN – COTTER 1/8 DIA X 1 ZP	1	
18	MAC320207	RING – SPLIT	1	
A	MAC136143	BOLT – HEX HD TFL M16 X 2 X 30-10.9-AA1J		
B	MAC152730	BOLT – HEX HD TFL M12 X 1.75 X 35-10.9-AA1J		
C	MAC191489	BOLT – RHSSN TFL M8 X 1.25 X 16-8.8-AA1J		
D	MAC135337	NUT – HEX FLG CTR LK M8 X 1.25-8-AA1J		
E	MAC136485	BOLT – HEX FLG HD TFL M8 X 1.25 X 16-8.8-AA1J		
F	MAC16235	WASHER – FLAT		
G	MAC136445	NUT – HEX SLTD FINE M20 X 1.5-SPCL-22HA-ZINC		

91. The tail end reel support includes lube fitting (MAC18671) and two cup roller bearings (MAC164215).

39 Reel Drive – Single Reel

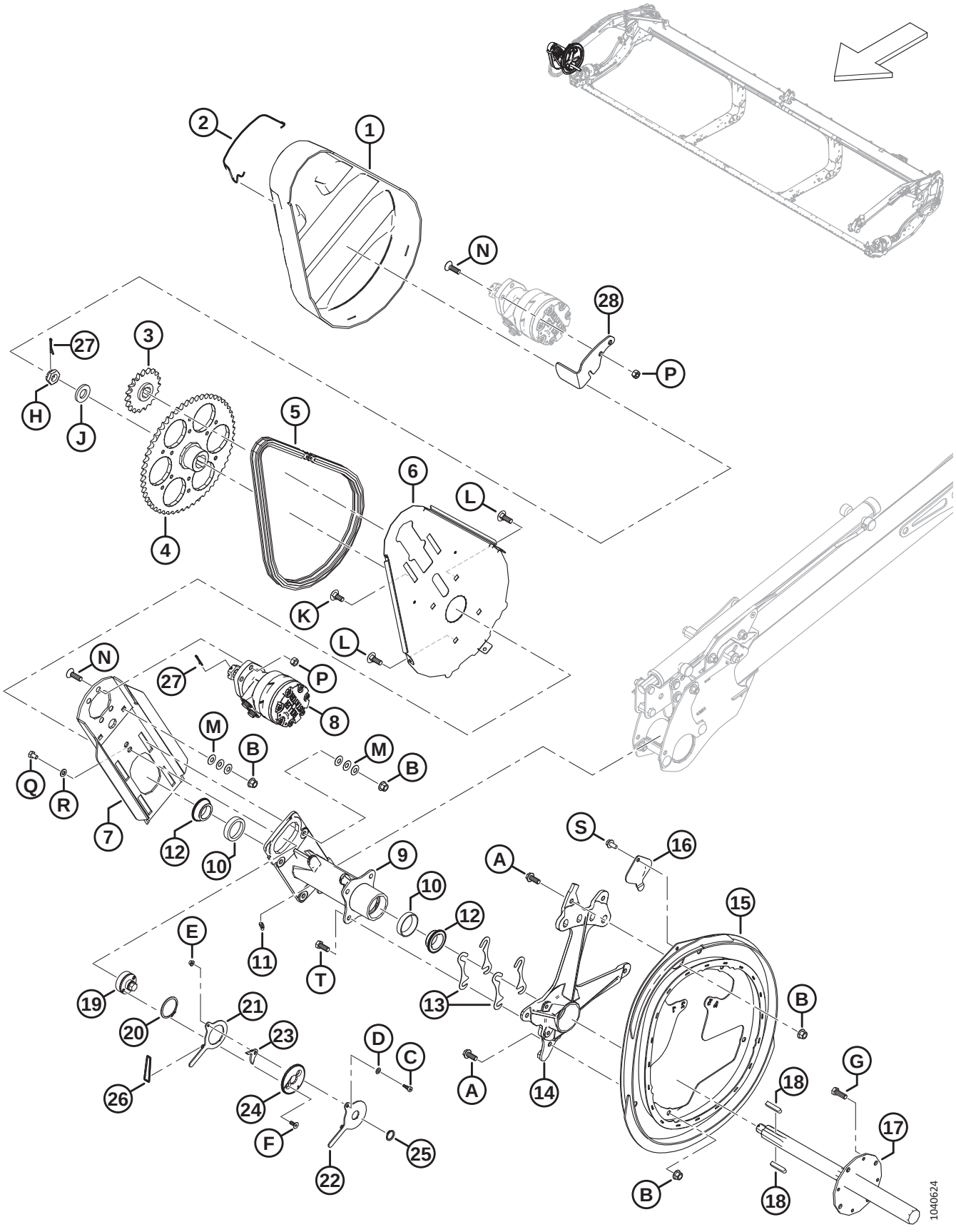

REEL DRIVE – SINGLE REEL

Ref	Part Number	Description	Qty	Serial Number
1	MAC228614	COVER – REEL DRIVE SR	1	
2	MAC228611	SPRING – REEL DRIVE COVER	1	
3	MAC273875	SPROCKET – RC 60, 19 TOOTH	1	
4	MAC228299	SPROCKET – MACHINING 56 TOOTH	1	
5	MAC273907	CHAIN – RC 60 ENDLESS 76 LINKS	1	
	MAC273963	CHAIN – RC C/W CONNECTOR 76 LINKS	OPT	
6	MAC228604	SUPPORT – REEL DRIVE BACKPLATE	1	
7	MAC360144	PLATE – MOTOR MOUNT W/ GRAPHITE	1	
8	MAC273258	MOTOR – HYD-15.9 CU.IN. 506 SERIES [92]	1	
	MAC273259	SEAL KIT [93]		
	MAC273078	MOTOR – HYD-260 CC HIGH CAPACITY BEARING [94]	OPT	
	MAC311620	SEAL KIT [95]		
	MAC137375	NUT – SLTD JAM 1.0-20 UNEF		
9	MAC273758	HUB – REEL DRIVE [96]	1	
10	MAC164214	BEARING – CUP	2	
11	MAC21301	FITTING – LUBRICATION	1	
12	MAC164213	BEARING – CONE C/W SEAL	2	
13	MAC164061	SHIM – HUB TO CAM	4	
14	MAC228292	SUPPORT – CAM MACHINING	1	
15	MAC273926	CAM – WELDMENT	1	
16	MAC137476	COVER – CAM BEARING ACCESS	1	
17	MAC228301	SHAFT – REEL DRIVE MACHINED	1	
18	MAC137721	KEY – REEL DRIVE SHAFT	2	
19	MAC228460	TIGHTENER – CHAIN	1	
20	MAC111521	RING – RETAINING	1	
21	MAC228478	ARM – INNER	1	
22	MAC228479	ARM – OUTER	1	
23	MAC228485	LATCH	1	

92. Standard factory-installed motor.
93. Seal kit for standard motor (MAC273258).
94. Optional high capacity motor for high reel loads.
95. Seal kit for optional high capacity motor (MAC273078).
96. Hub includes two cup bearings (MAC164214) and lubrication fitting (MAC21301).

REEL DRIVE – SINGLE REEL

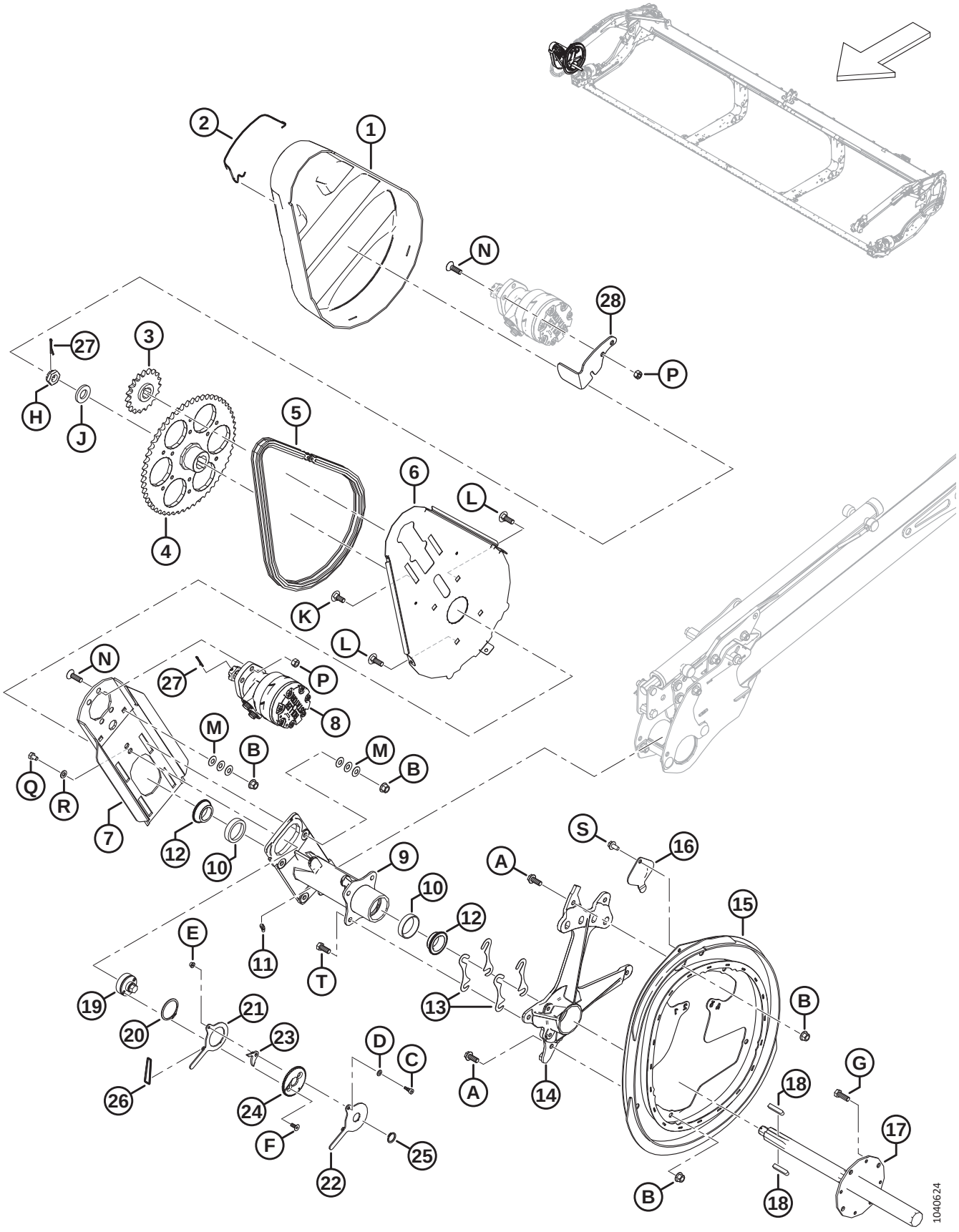

Ref	Part Number	Description	Qty	Serial Number
24	MAC228477	DISC – LOCK	1	
25	MAC191353	RING – RETAINING EXTERNAL	1	
26	MAC136882	O-RING – 3.5 X 40.5	1	
27	MAC18607	PIN – COTTER 5/32 DIA X 1.5 ZP	2	
28	MAC360186	RETAINER – COVER	1	
A	MAC320180	BOLT – HEX FLG HD M12 X 1.75 X 30-SPCL-8.8-AA1J		
B	MAC136431	NUT – HEX FLG CTR LOC M12 X 1.75-10		
C	MAC197135	SCREW – HEX SOC HD SHLDR M8 X 10		
D	MAC184708	WASHER – FLAT M8-200HV-AA1J		
E	MAC152668	NUT – HEX FLG CTR LOC M6 X 1-8		
F	MAC136592	SCREW – HEX SOC CSK HD TFL M8 X 1.25 X 20-8.8-ZINC		
G	MAC152730	BOLT – HEX HD TFL M12 X 1.75 X 35-10.9-AA1J		
H	MAC136446	NUT – HEX SLTD FINE M24 X 1.5-SPCL-22HA-ZINC		
J	MAC31774	WASHER – FLAT 1-1/8-30HRC-AC0C		
K	MAC184667	BOLT – RHSN M12 X 1.75 X 30-8.8-ZINC		
L	MAC136291	BOLT – RHSN TFL M12 X 1.75 X 35-8.8-ZINC		
M	MAC136702	WASHER – CON SPRING M12-ZINC		
N	MAC136401	SCREW – CSK HEX SOC M12 X 1.75 X 40-10.9-AA1J		
P	MAC136759	NUT – HEX CTR LOC M12 X 1.75-8-AA1J		
Q	MAC136842	BOLT – HEX HD TFL M10 X 1.5 X 16-8.8-ZINC		
R	MAC30655	WASHER – HARD M10-340HV-AB0C		
S	MAC136209	SCREW – HEX WSHR M10 X 1.5X20-450HV		
T	MAC30630	BOLT – HEX HD TFL M12 X 1.75 X 30-8.8-A3L		

40 Reel Drive – Double Reel

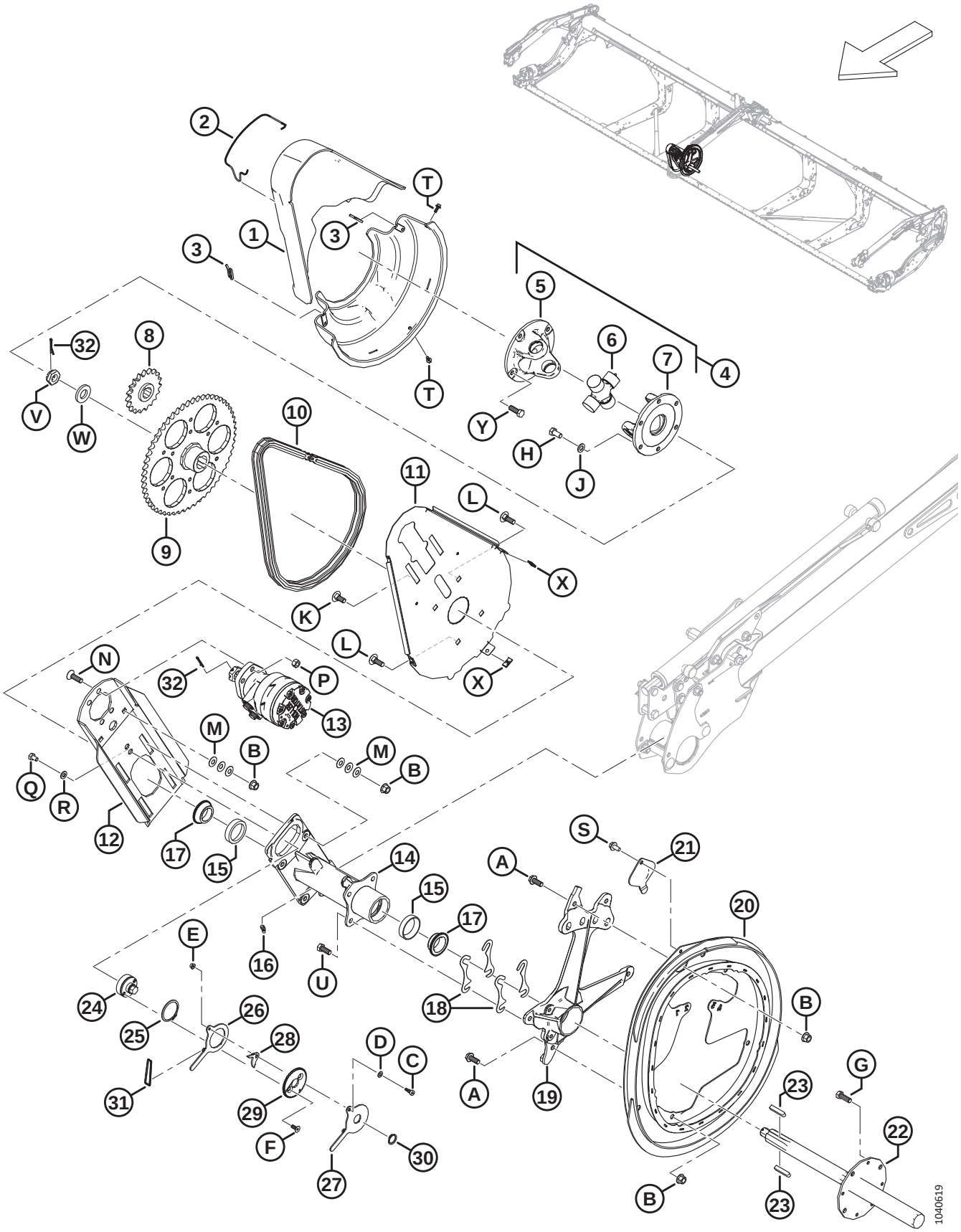

REEL DRIVE – DOUBLE REEL

Ref	Part Number	Description	Qty	Serial Number
1	MAC228619	COVER SET – CENTER REEL DRIVE [97]	1	
2	MAC228611	SPRING – REEL DRIVE COVER	1	
3	MAC228848	CLIP – COVER DUAL REEL DRIVE	2	
4	MAC228382	REEL DRIVE U-JOINT [98]	1	
5	MAC228384	YOKE – FLANGE 4 BOLT	1	
6	MAC137825	CROSS JOURNAL ASSEMBLY	1	
7	MAC228385	YOKE – FLANGE 6 BOLT	1	
8	MAC273875	SPROCKET – RC 60, 19 TOOTH	1	
9	MAC228299	SPROCKET – MACHINING 56 TOOTH	1	
10	MAC273907	CHAIN – RC 60 ENDLESS 76 LINKS	1	
	MAC273963	CHAIN – RC C/W CONNECTOR 76 LINKS	OPT	
11	MAC228604	SUPPORT – REEL DRIVE BACKPLATE	1	
12	MAC340216	PLATE – MOTOR MOUNT W/ GRAPHITE	1	
13	MAC273258	MOTOR – HYD-15.9 CU.IN. 506 SERIES [99]	1	
	MAC273259	SEAL KIT [100]		
	MAC273078	MOTOR – HYD-260 CC HIGH CAPACITY BEARING [101]	OPT	
	MAC311620	SEAL KIT [102]		
	MAC137375	NUT – SLTD JAM 1.0-20 UNEF		
14	MAC273758	HUB – REEL DRIVE [103]	1	
15	MAC164214	BEARING – CUP	2	
16	MAC21301	FITTING – LUBRICATION	1	
17	MAC164213	BEARING – CONE C/W SEAL	2	
18	MAC164061	SHIM – HUB TO CAM	4	
19	MAC228292	SUPPORT – CAM MACHINING	1	
20	MAC273926	CAM – WELDMENT	1	
21	MAC137476	COVER – CAM BEARING ACCESS	1	
22	MAC228301	SHAFT – REEL DRIVE MACHINED	1	

97. Set includes upper and lower drive reel covers.
98. U-joint includes cross journal assembly (MAC137825), four bolt flange yoke (MAC228384), and six bolt flange yoke (MAC228385).
99. Standard factory-installed motor.
100. Seal kit for standard motor (MAC273258).
101. Optional high capacity motor for high reel loads.
102. Seal kit for optional high capacity motor (MAC273078).
103. Hub includes two cup bearings (MAC164214) and lubrication fitting (MAC21301).

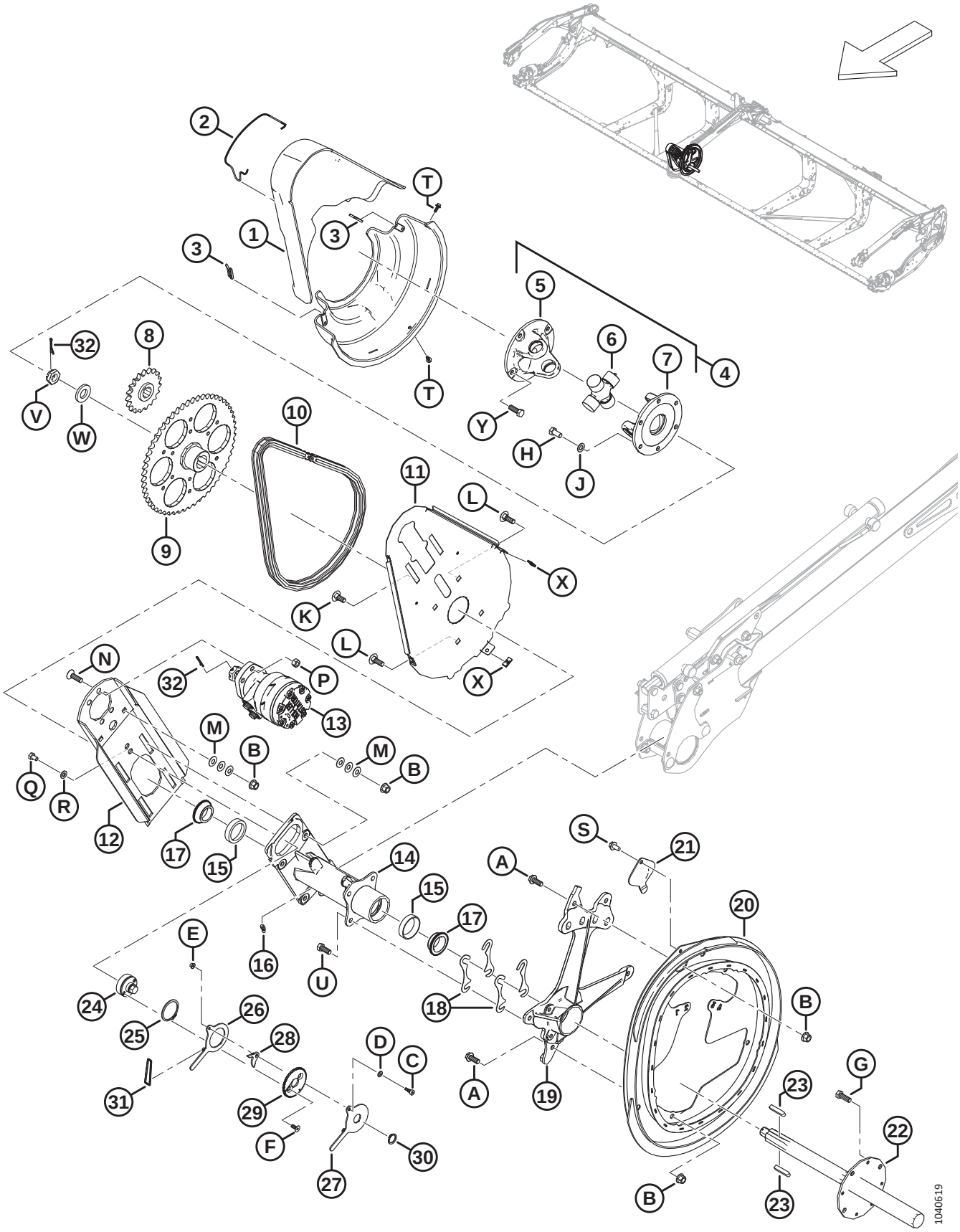
1040619

Ref	Part Number	Description	Qty	Serial Number
23	MAC137721	KEY – REEL DRIVE SHAFT	2	
24	MAC228460	TIGHTENER – CHAIN	1	
25	MAC111521	RING – RETAINING	1	
26	MAC228478	ARM – INNER	1	
27	MAC228479	ARM – OUTER	1	
28	MAC228485	LATCH	1	
29	MAC228477	DISC – LOCK	1	
30	MAC191353	RING – RETAINING EXTERNAL	1	
31	MAC136882	O-RING – 3.5 X 40.5	1	
32	MAC18607	PIN – COTTER 5/32 DIA X 1.5 ZP	2	
A	MAC320180	BOLT – HEX FLG HD M12 X 1.75 X 30-SPCL-8.8-AA1J		
B	MAC136431	NUT – HEX FLG CTR LOC M12 X 1.75-10		
C	MAC197135	SCREW – HEX SOC HD SHLDR M8 X 10		
D	MAC184708	WASHER – FLAT M8-200HV-AA1J		
E	MAC152668	NUT – HEX FLG CTR LOC M6 X 1-8		
F	MAC136592	SCREW – HEX SOC CSK HD TFL M8 X 1.25 X 20-8.8-ZINC		
G	MAC152730	BOLT – HEX HD TFL M12 X 1.75 X 35-10.9-AA1J		
H	MAC50155	BOLT – HEX HD TFL M12 X 1.75 X 25-8.8-AA1J		
J	MAC184714	WASHER – FLAT REG M12-300HV		
K	MAC184667	BOLT – RHSN M12 X 1.75 X 30-8.8-ZINC		
L	MAC136291	BOLT – RHSN TFL M12 X 1.75 X 35-8.8-ZINC		
M	MAC136702	WASHER – CON SPRING M12-ZINC		
N	MAC136401	SCREW – CSK HEX SOC M12 X 1.75 X 40-10.9-AA1J		
P	MAC136759	NUT – HEX CTR LOC M12 X 1.75-8-AA1J		
Q	MAC136842	BOLT – HEX HD TFL M10 X 1.5 X 16-8.8-ZINC		
R	MAC30655	WASHER – HARD M10-340HV-AB0C		
S	MAC136209	SCREW – HEX WSHR M10 X 1.5X20-450HV		
T	MAC135959	BOLT – HEX FLG HD M6 X 1 X 16-10.9-AA1J		
U	MAC30630	BOLT – HEX HD TFL M12 X 1.75 X 30-8.8-A3L		
V	MAC136446	NUT – HEX SLTD FINE M24 X 1.5-SPCL-22HA-ZINC		
W	MAC31774	WASHER – FLAT 1-1/8-30HRC-AC0C		

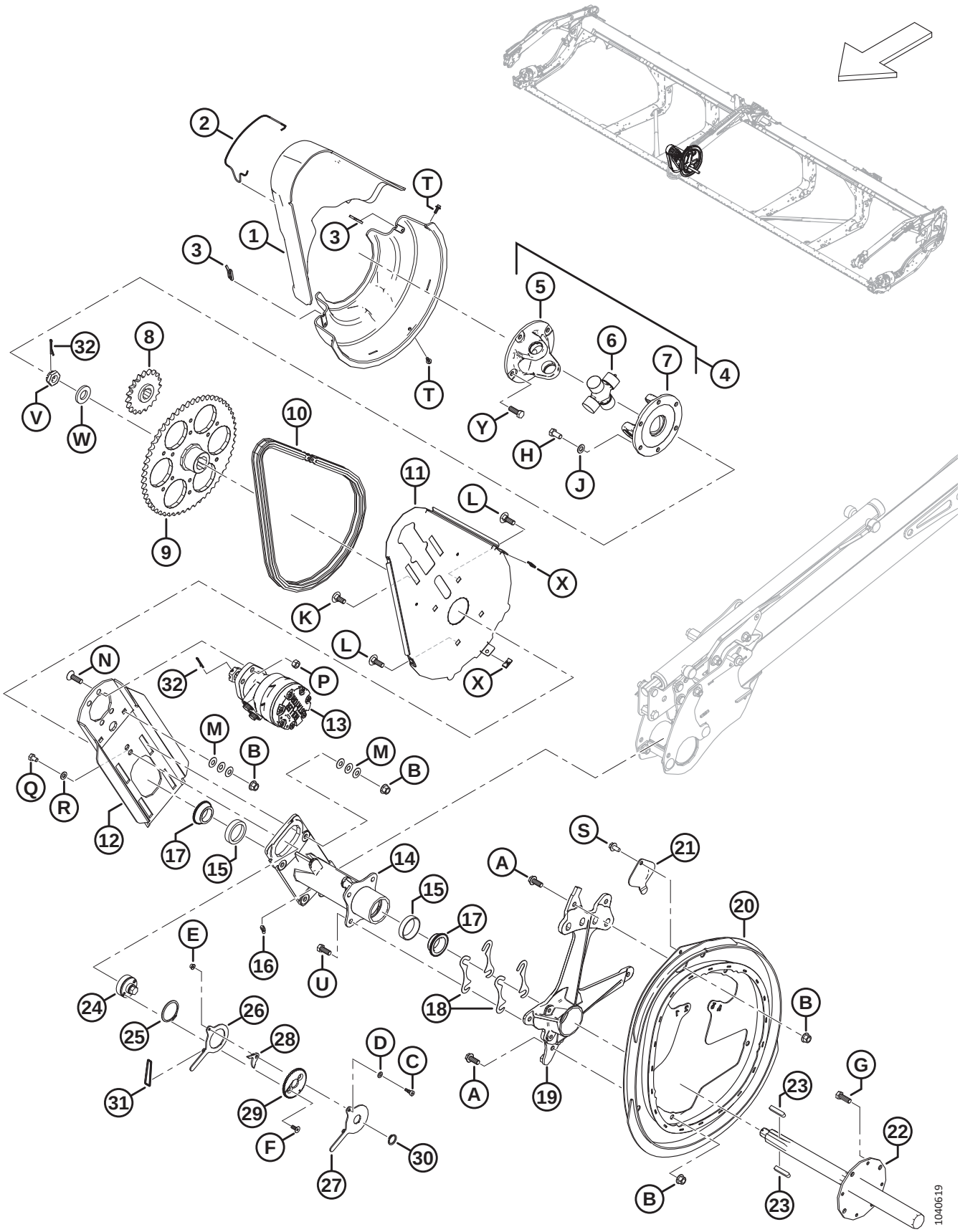
1040619

Ref	Part Number	Description	Qty	Serial Number
X	MAC136443	NUT – SPRING "U" TYPE M6 X 1		
Y	MAC152730	BOLT – HEX HD TFL M12 X 1.75 X 35-10.9-AA1J		

41 Reel Cam Components – Right Arm, Double Reel

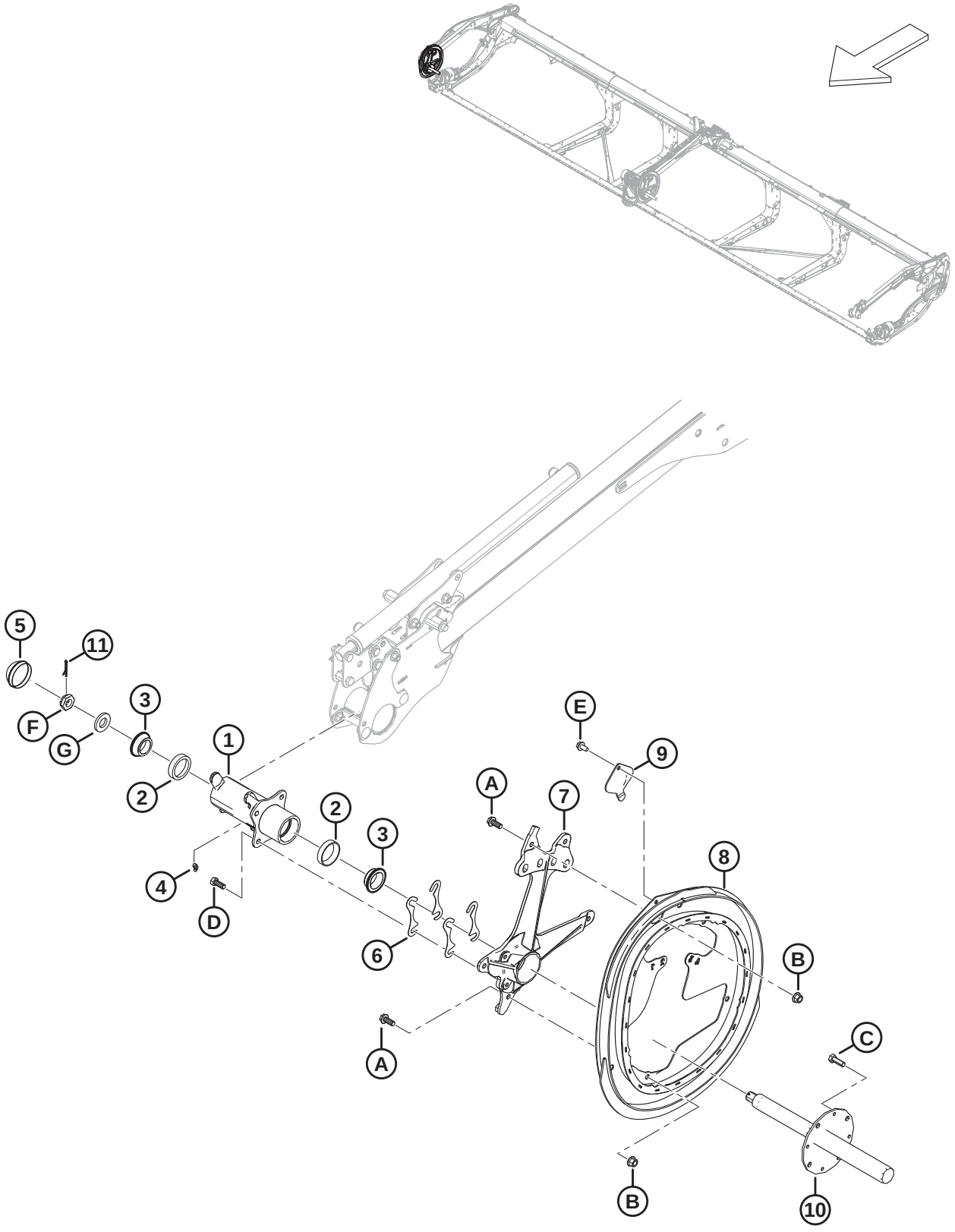

REEL CAM COMPONENTS – RIGHT ARM, DOUBLE REEL

Ref	Part Number	Description	Qty	Serial Number
1	MAC273759	HUB ASSEMBLY – RH CAM [104]	1	
2	MAC164214	BEARING – CUP	2	
3	MAC164213	BEARING – CONE C/W SEAL	2	
4	MAC21301	FITTING – LUBRICATION	1	
5	MAC140250	CAP – DUST	1	
6	MAC164061	SHIM – HUB TO CAM	4	
7	MAC228292	SUPPORT – CAM MACHINING	1	
8	MAC273926	CAM – WELDMENT	1	
9	MAC137476	COVER – CAM BEARING ACCESS	1	
10	MAC228302	SHAFT – MACHINED RH REEL	1	
11	MAC18607	PIN – COTTER 5/32 DIA X 1.5 ZP	1	
A	MAC320180	BOLT – HEX FLG HD M12 X 1.75 X 30-SPCL-8.8-AA1J		
B	MAC136431	NUT – HEX FLG CTR LOC M12 X 1.75-10		
C	MAC152730	BOLT – HEX HD TFL M12 X 1.75 X 35-10.9-AA1J		
D	MAC30630	BOLT – HEX HD TFL M12 X 1.75 X 30-8.8-A3L		
E	MAC136209	SCREW – HEX WSHR M10 X 1.5 X 20-450HV		
F	MAC136446	NUT – HEX SLTD FINE M24 X 1.5-SPCL-22HA-ZINC		
G	MAC31774	WASHER – FLAT 1-1/8-30 HRC-AC0C		

104. The hub assembly includes two bearing cups (MAC164214) and lubrication fitting (MAC21301).

42 Reel – Tine Tube

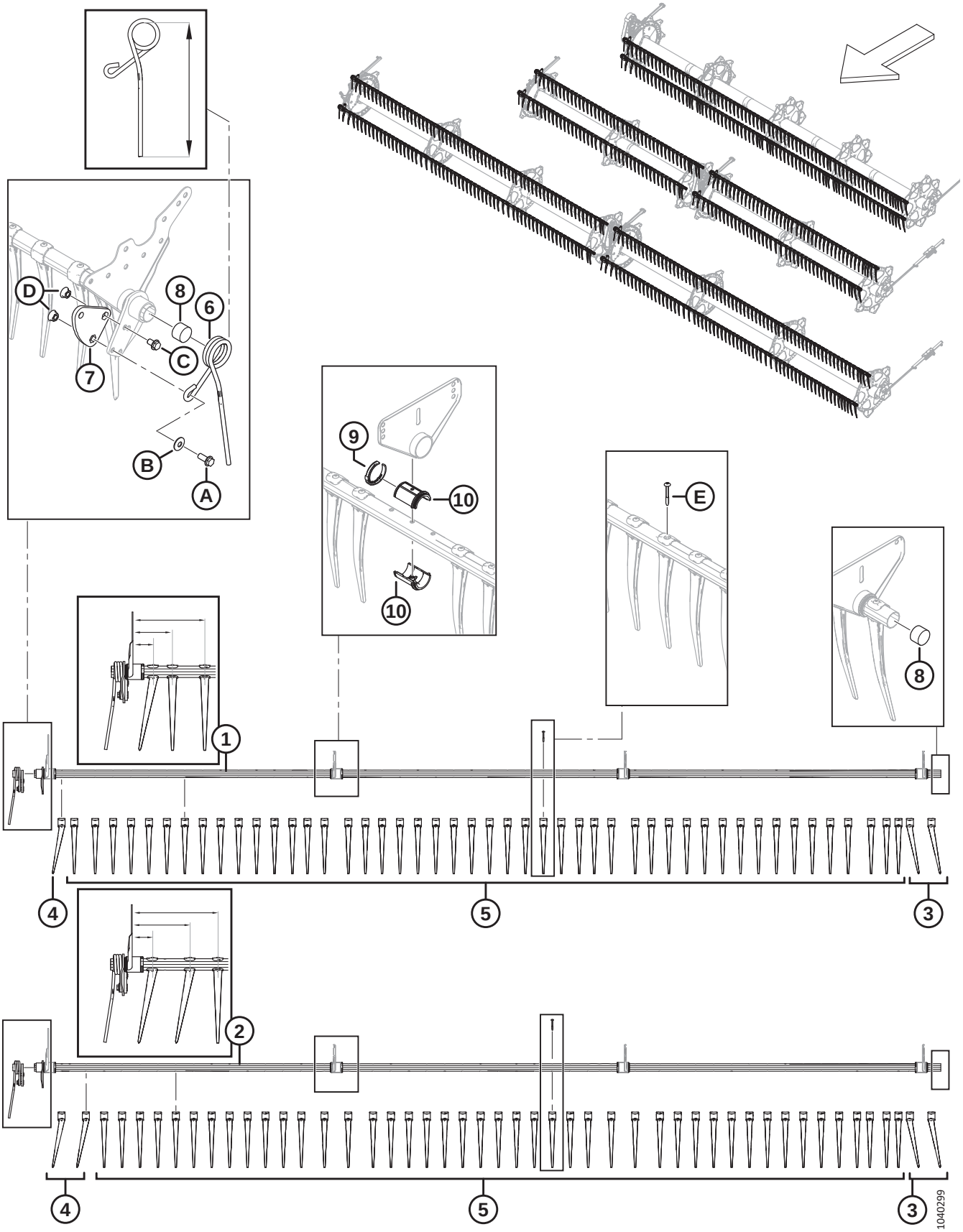

NOTE:

Finger configuration varies for narrow or wide and left, right, and center tine tubes.

Ref	Part Number	Description	Qty	Serial Number
1	MAC360201	TINE TUBE WELDT – 25 FT SR NARROW [105]	3	
	MAC311368	TINE TUBE WELDT – 30 FT DR NARROW [105]	6	
	MAC311207	TINE TUBE WELDT – 35 FT DR NARROW [105]	6	
	MAC311303	TINE TUBE WELDT – 41 FT DR NARROW [105]	6	
	MAC311588	TINE TUBE WELDT – 45 FT DR NARROW [105]	6	
2	MAC360199	TINE TUBE WELDT – 25 FT SR WIDE [105]	2	
	MAC311365	TINE TUBE WELDT – 30 FT DR WIDE [105]	4	
	MAC311210	TINE TUBE WELDT – 35 FT DR WIDE [105]	4	
	MAC311306	TINE TUBE WELDT – 41 FT DR WIDE [105]	4	
	MAC311589	TINE TUBE WELDT – 45 FT DR WIDE [105]	4	
3	MAC311524	FINGER – PLASTIC, LH ANGLED (10 PACK)	A/R	
4	MAC311523	FINGER – PLASTIC, RH ANGLED (10 PACK)	A/R	
5	MAC174849	FINGER – PLASTIC, STRAIGHT (10 PACK)		
6	MAC311327	FINGER – CAM END BENT, LH REEL (315 MM LG) [106]	1	
	MAC311325	FINGER – CAM END OUTBOARD, RH REEL (305 MM LG) [106]	1	
7	MAC228319	ARM – CRANK MACHINING (SR, DR)	1	
	MAC273877	ARM – CRANK MACHINING (TR) [107]	1	
8	MAC137980	PLUG – TINE TUBE	2	
9	MAC220941	CLAMP – TINE TUBE BUSHING, CENTER RIB (5 PACK)	A/R	
10	MAC220939	TINE TUBE BUSHING (25 PACK)	A/R	
A	MAC320192	BOLT – HEX FLG HD M12 X 1.75 X 30-SPCL-8.8-AA1J		

105. Narrow or wide tine tubes can be distinguished from the first three fingers of the RH side. Narrow tine tubes have one RH angled finger (MAC311523) followed by two straight fingers (MAC174849) and measure 76 mm, 146 mm, and 265 mm as illustrated. Wide tine tubes have two RH angled fingers (MAC311523) followed by one straight finger (MAC174849) and measure 76 mm, 214 mm, and 315 mm as illustrated.
106. There are two lengths of finger that can be ordered. The finger at the RH side of the reel is shorter than fingers at the center of the header. The correct finger must be installed in the correct position to prevent damage. Determine the proper length (315 or 305 mm) of a finger by measuring the finger from the inside top loop to the finger tip as shown in illustration.
107. Aluminum; for triple-reel headers only.

REEL – TINE TUBE

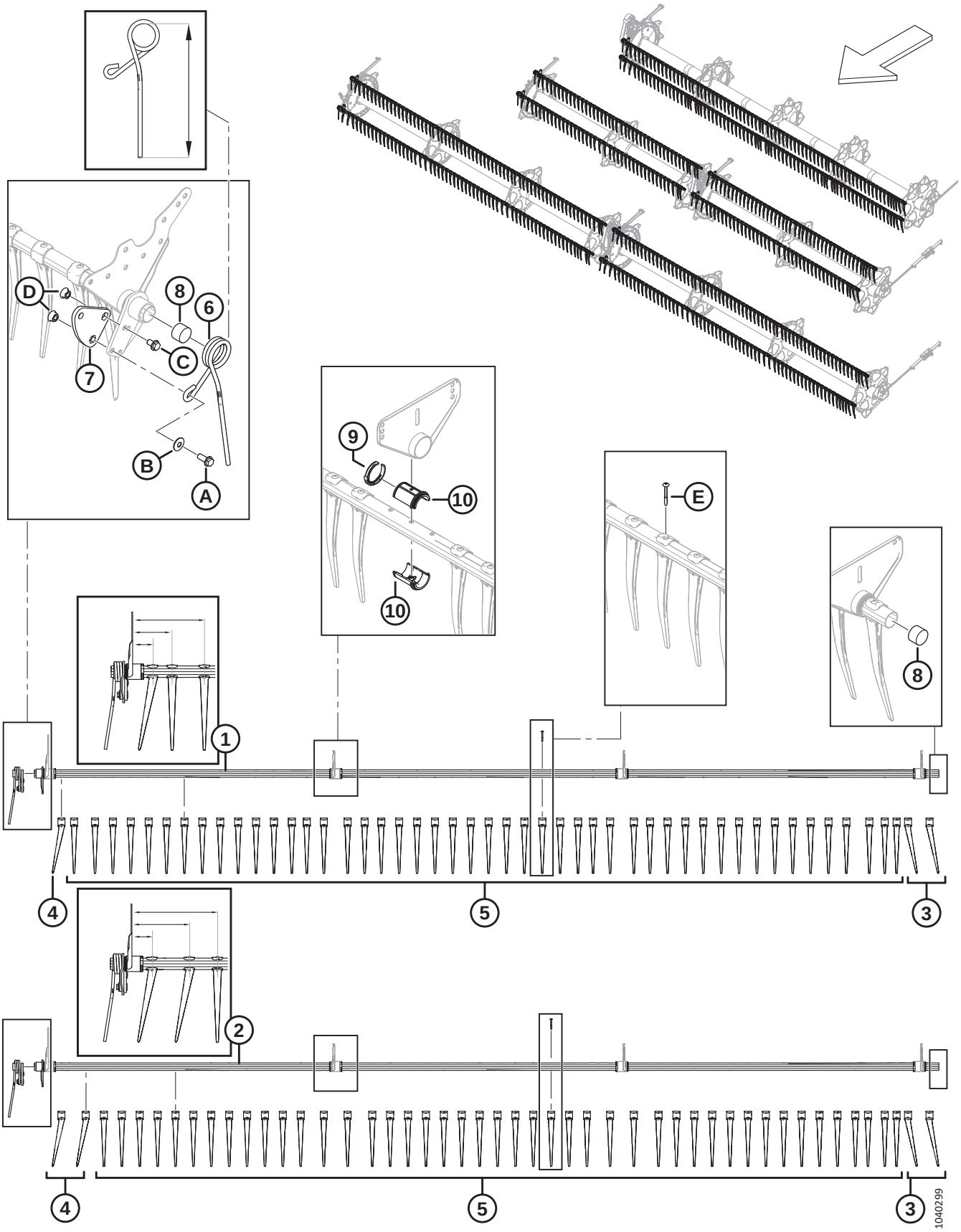

REEL – TINE TUBE

Ref	Part Number	Description	Qty	Serial Number
B	MAC184597	WASHER – CON SPRING M12-AA1J [108]		
C	MAC320187	BOLT – HEX FLG HD M12 X 1.75 X 20-SPCL-8.8-AA1J		
D	MAC184697	NUT – HEX SER FLG M12 X 1.75-8-AA1J		
E	MAC252687	SCREW – 48° PLASTITE TWIN HELIX		

108. Be sure to note the orientation of washer (MAC184597). The concave (inward facing) surface of the washer should be installed facing away from the tine tube crank arm assembly.

43 Reel Discs – Cam End and Linkage

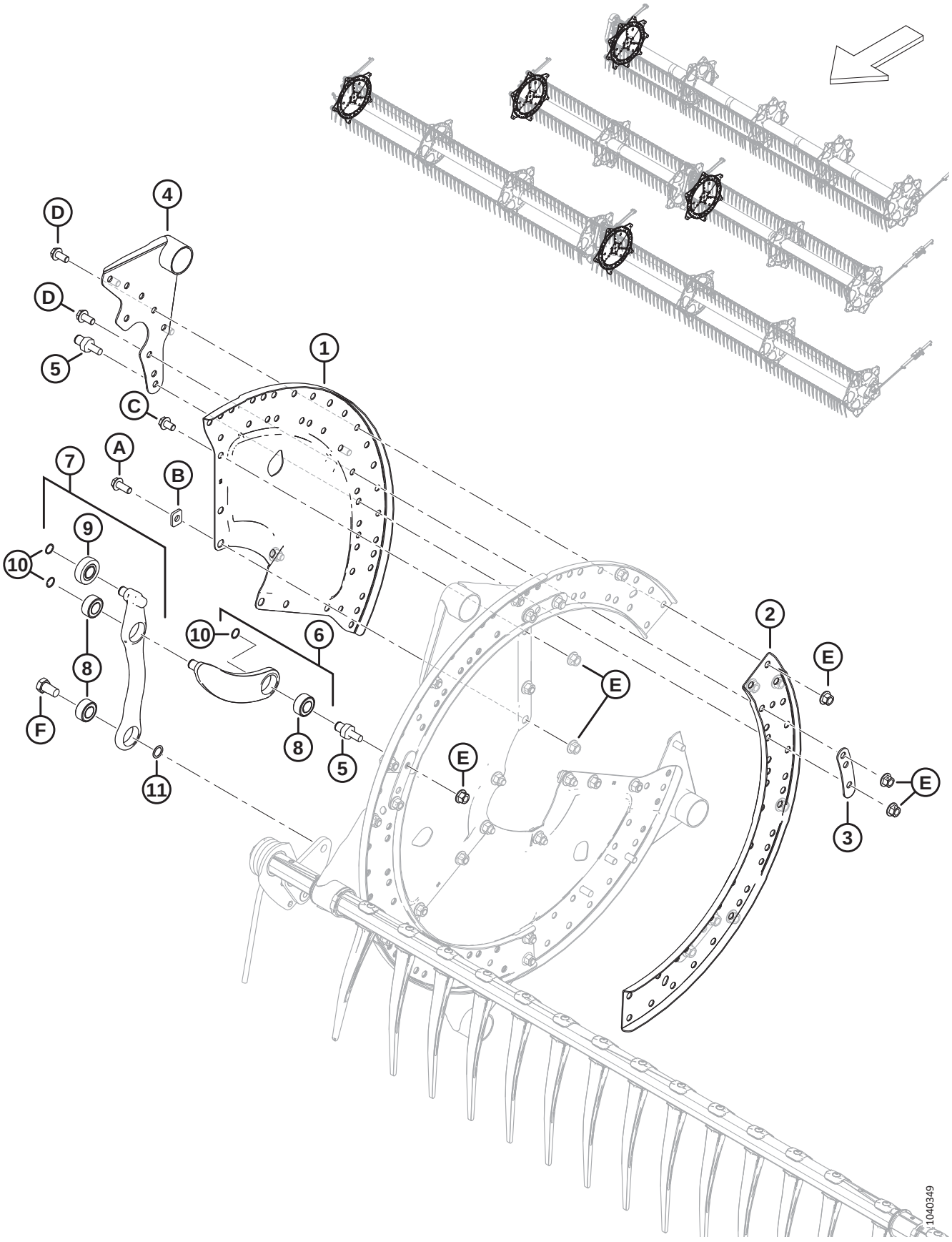

REEL DISCS – CAM END AND LINKAGE

Ref	Part Number	Description	Qty 5/6/9 Bat	Serial Number
1	MAC273373	SECTOR – CAM END	3/3/3	
2	MAC273376	CHANNEL – CAM DISC	3/3/3	
3	MAC311672	STRAP	5/6/9	
4	MAC335924	ARM WELDT – CAM END	5/6/9	
5	MAC340146	STUD (FOR LINKAGE)	5/6/9	
6	MAC311615	ARM – ASSEMBLY [109]	5/6/9	
7	MAC311617	ARM – TINE CONTROL ASSY [110]	5/6/9	
8	MAC273347	BEARING	15/18/27	
9	MAC273524	BEARING – CAM FOLLOWER	5/6/9	
10	MAC273536	RING – RETAINING	15/18/27	
11	MAC137529	SHIM – CRANK BEARING	5/6/9	
A	MAC320180	BOLT – HEX FLG HD M12 X 1.75 X 30-SPCL-8.8-AA1J		
B	MAC273666	WASHER		
C	MAC320179	BOLT – HEX FLG HD TFL M12 X 1.75 X 20-SPCL-8.8-AA1J		
D	MAC320175	BOLT – HEX FLG HD TFL M12 X 1.75 X 25-SPCL-8.8-AA1J		
E	MAC136431	NUT – HEX FLG CTR LOC M12 X 1.75-10		
F	MAC228316	BOLT – HEX HD M16 X 1.5 X 15-SPCL-8.8-AA1J		

109. The arm assembly includes arm (NSS), bearing (MAC273347), and retaining ring (MAC273536).
110. The tine control assembly includes arm (NSS), cam follower bearing (MAC273524), two bearings (MAC273347), and retaining ring (MAC273536).

44 Reel Discs – Mid Span

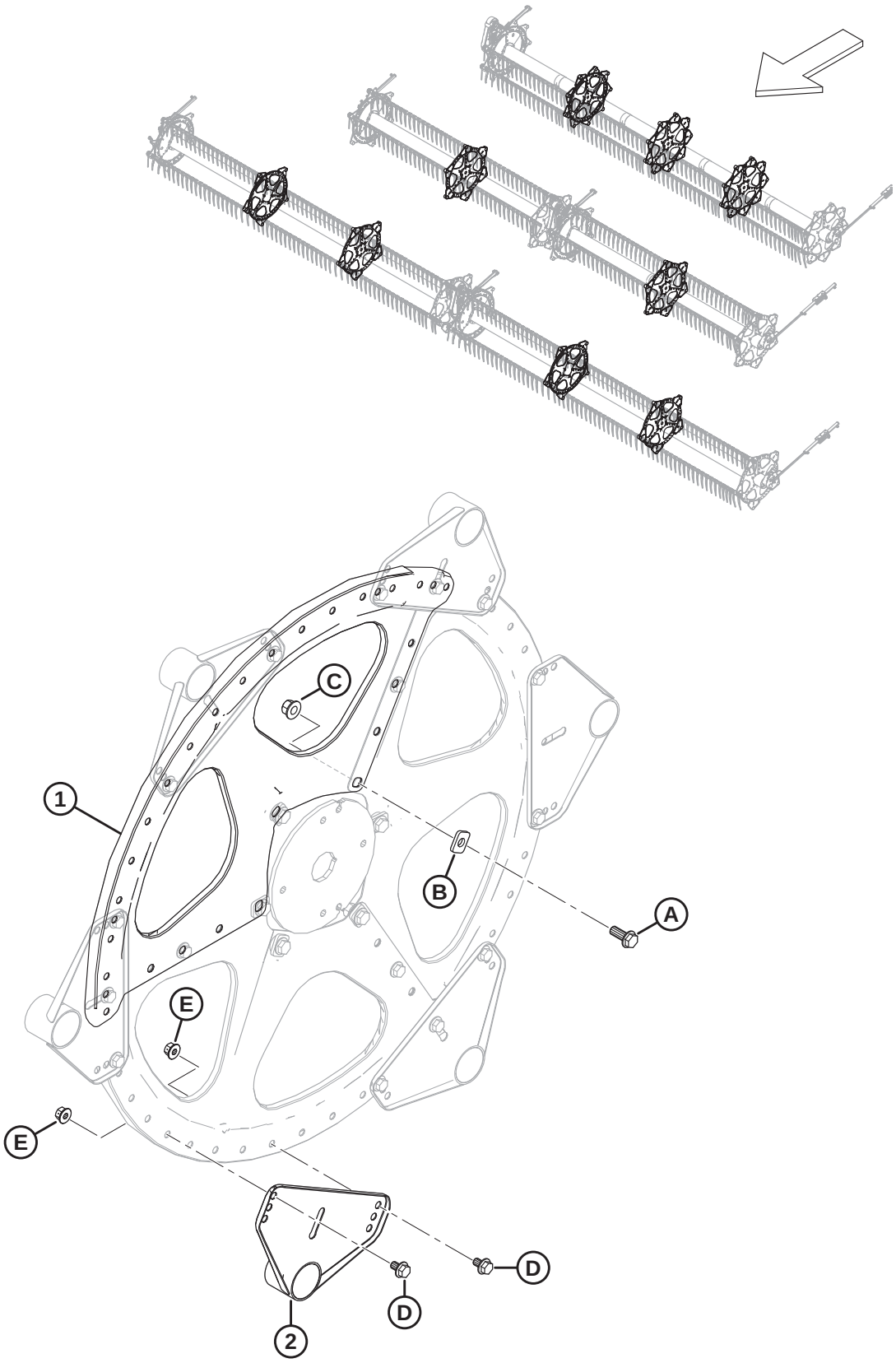

REEL DISCS – MID SPAN

Ref	Part Number	Description	Qty 5/6/9 Bat	Serial Number
1	MAC273375	SECTOR – MID SPAN AND TAIL END	3/3/3	
2	MAC273523	ARM WELDT – MID SPAN	5/6/9	
A	MAC320180	BOLT – HEX FLG HD M12 X 1.75 X 30-SPCL-8.8-AA1J		
B	MAC273666	WASHER		
C	MAC136431	NUT – HEX FLG CTR LOC M12 X 1.75-10		
D	MAC136151	BOLT – HEX FLG HD TFL M10 X 1.5 X 16-8.8-AA1J		
E	MAC135799	NUT – HEX FLG CTR LOC M10 X 1.5-10		

45 Reel Discs – Tail End

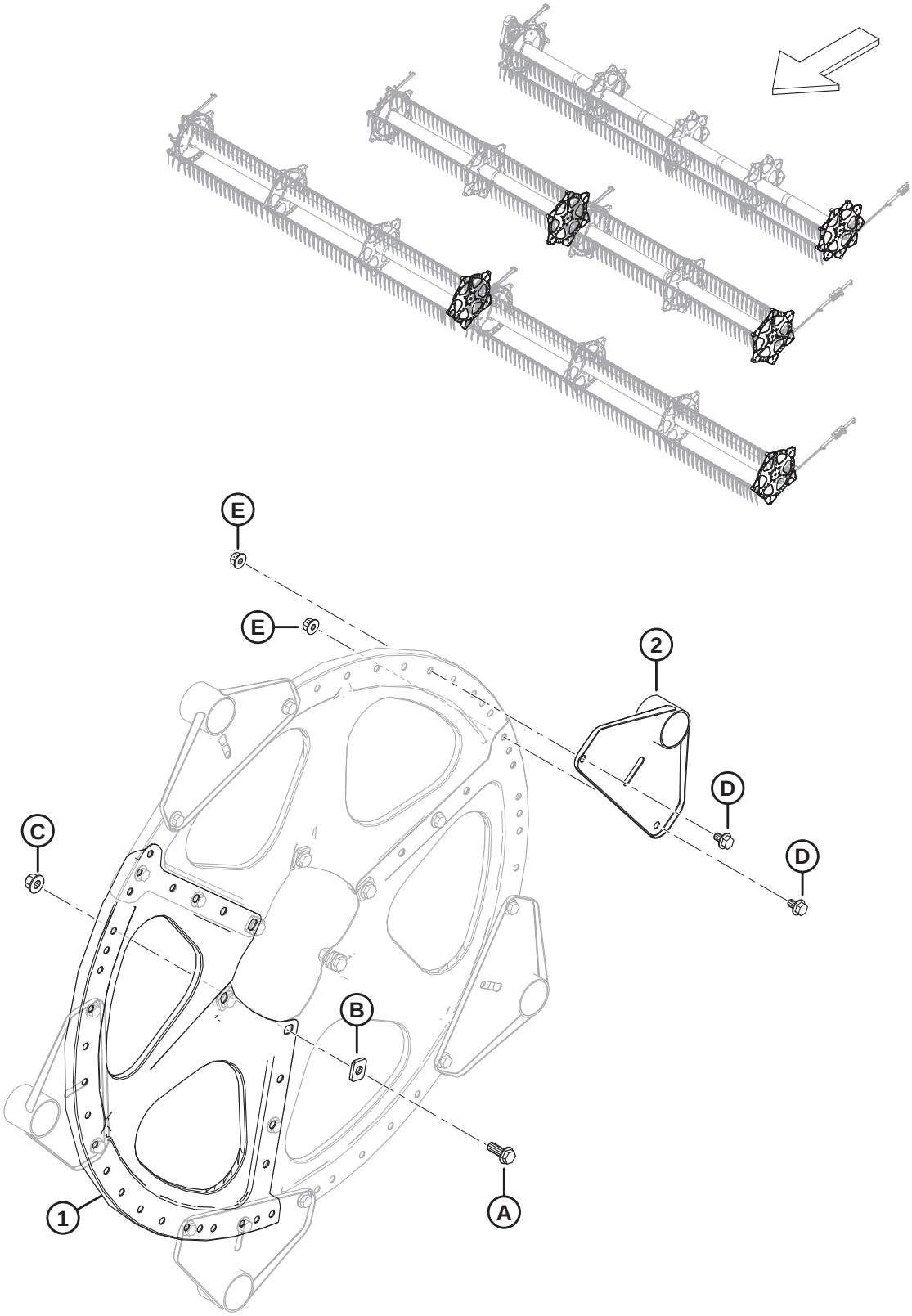

REEL DISCS – TAIL END

Ref	Part Number	Description	Qty 5/6/9 Bat	Serial Number
1	MAC273375	SECTOR – MID SPAN AND TAIL END	3/3/3	
2	MAC311347	ARM WELDT – TAIL END	5/6/9	
A	MAC320180	BOLT – HEX FLG HD M12 X 1.75 X 30-SPCL-8.8-AA1J		
B	MAC273666	WASHER		
C	MAC136431	NUT – HEX FLG CTR LOC M12 X 1.75-10		
D	MAC136151	BOLT – HEX FLG HD TFL M10 X 1.5 X 16-8.8-AA1J		
E	MAC135799	NUT – HEX FLG CTR LOC M10 X 1.5-10		

46 Reel – Center Tubes, Single Reel

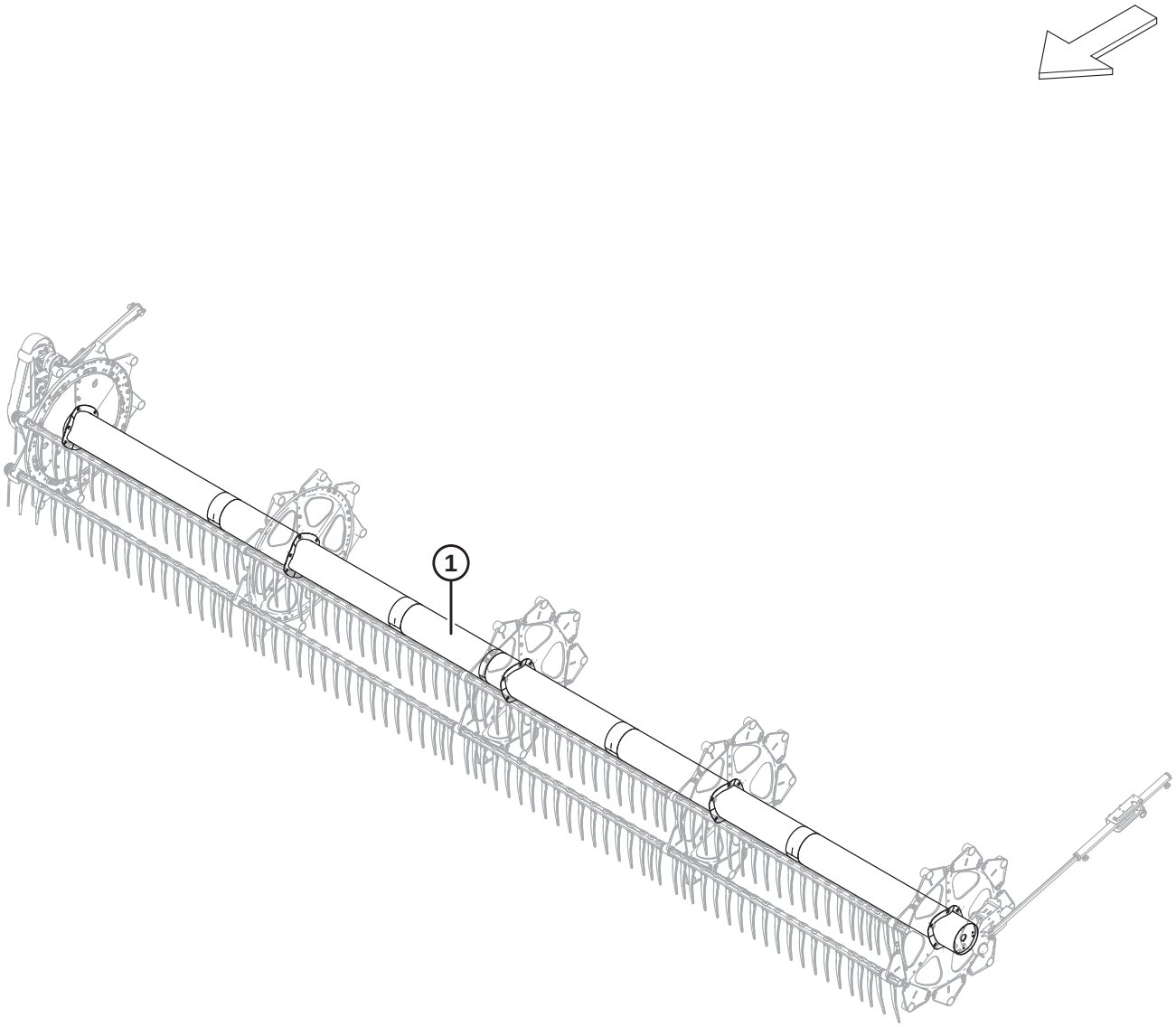

1040625

Ref	Part Number	Description	Qty	Serial Number
1	360376	CENTER TUBE – W/ DECALS, 25 FT (AMBER, RED-ORANGE DECALS)	1	

47 Reel – Center Tubes, Double Reel

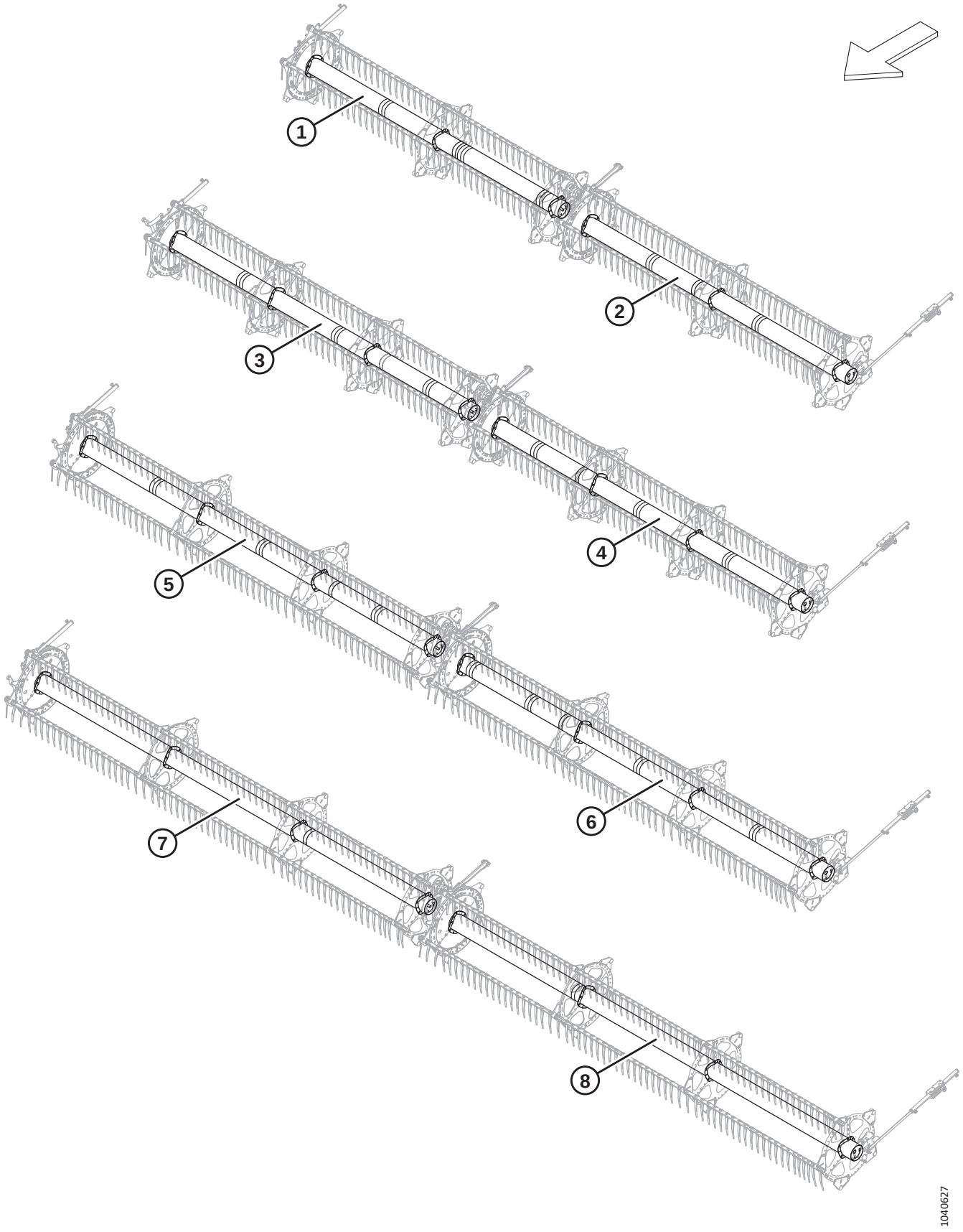

REEL – CENTER TUBES, DOUBLE REEL

Ref	Part Number	Description	Qty	Serial Number
1	MAC311644	CENTER TUBE – W/ DECALS, 30 FT RH (AMBER, RED-ORANGE DECALS)	1	
2	MAC311643	CENTER TUBE – W/ DECALS, 30 FT LH (AMBER, RED-ORANGE DECALS)	1	
3	MAC311646	CENTER TUBE – W/ DECALS, 35 FT RH (AMBER, RED-ORANGE DECALS)	1	
4	MAC311645	CENTER TUBE – W/ DECALS, 35 FT LH (AMBER, RED-ORANGE DECALS)	1	
5	MAC311648	CENTER TUBE – W/ DECALS, 41 FT RH (AMBER, RED-ORANGE DECALS)	1	
6	MAC311647	CENTER TUBE – W/ DECALS, 41 FT LH (AMBER, RED-ORANGE DECALS)	1	
7	MAC311045	CENTER TUBE – W/ DECALS, 45 FT RH (AMBER DECAL)	1	
8	MAC311044	CENTER TUBE – W/ DECALS, 45 FT LH (AMBER DECAL)	1	

48 Reel – Endshields, Cam End, Outboard (9 Bat)

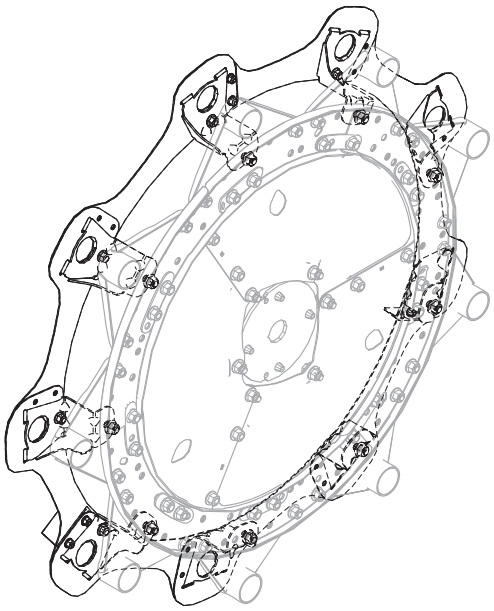

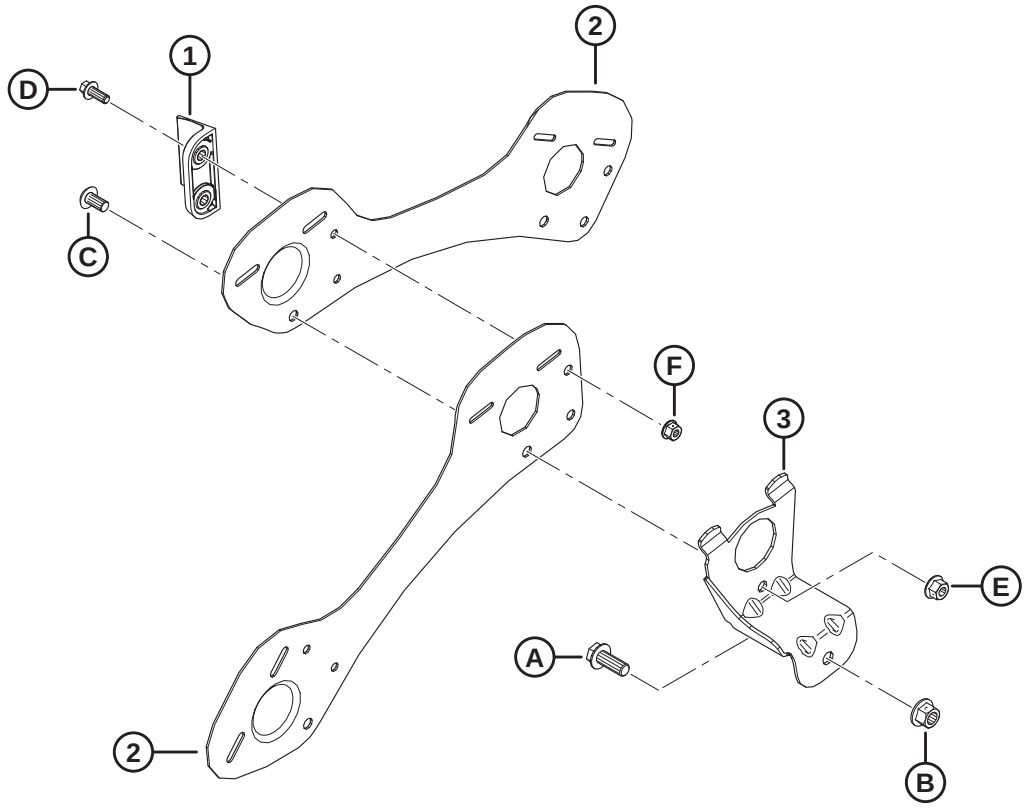

1040312

REEL – ENDSHIELDS, CAM END, OUTBOARD (9 BAT)

Ref	Part Number	Description	Qty	Serial Number
1	MAC313035	PADDLE – REEL END, HYTREL	3	
2	MAC311863	SHIELD – OUTBOARD RH 9 BAT	9	
3	MAC311964	SUPPORT – WELDT CAM END	9	
A	MAC320180	BOLT – HEX FLG HD M12 X 1.75 X 30-SPCL-8.8-ZINC		
B	MAC136431	NUT – HEX FLG CTR LOC M12 X 1.75-10		
C	MAC136395	SCREW – TORX TRUSS HD M10 X 1.5 X 20 X SPCL-8.8-A3L		
D	MAC136300	BOLT – HEX FLG HD TFL M8 X 1.25 X 20-8.8-AA3L		
E	MAC135799	NUT – HEX FLG CTR LOC M10 X 1.5-10		
F	MAC135337	NUT – HEX FLG CTR LK M8 X 1.25-8-AA1J		

49 Reel – Endshields, Tail End, Outboard (9 Bat)

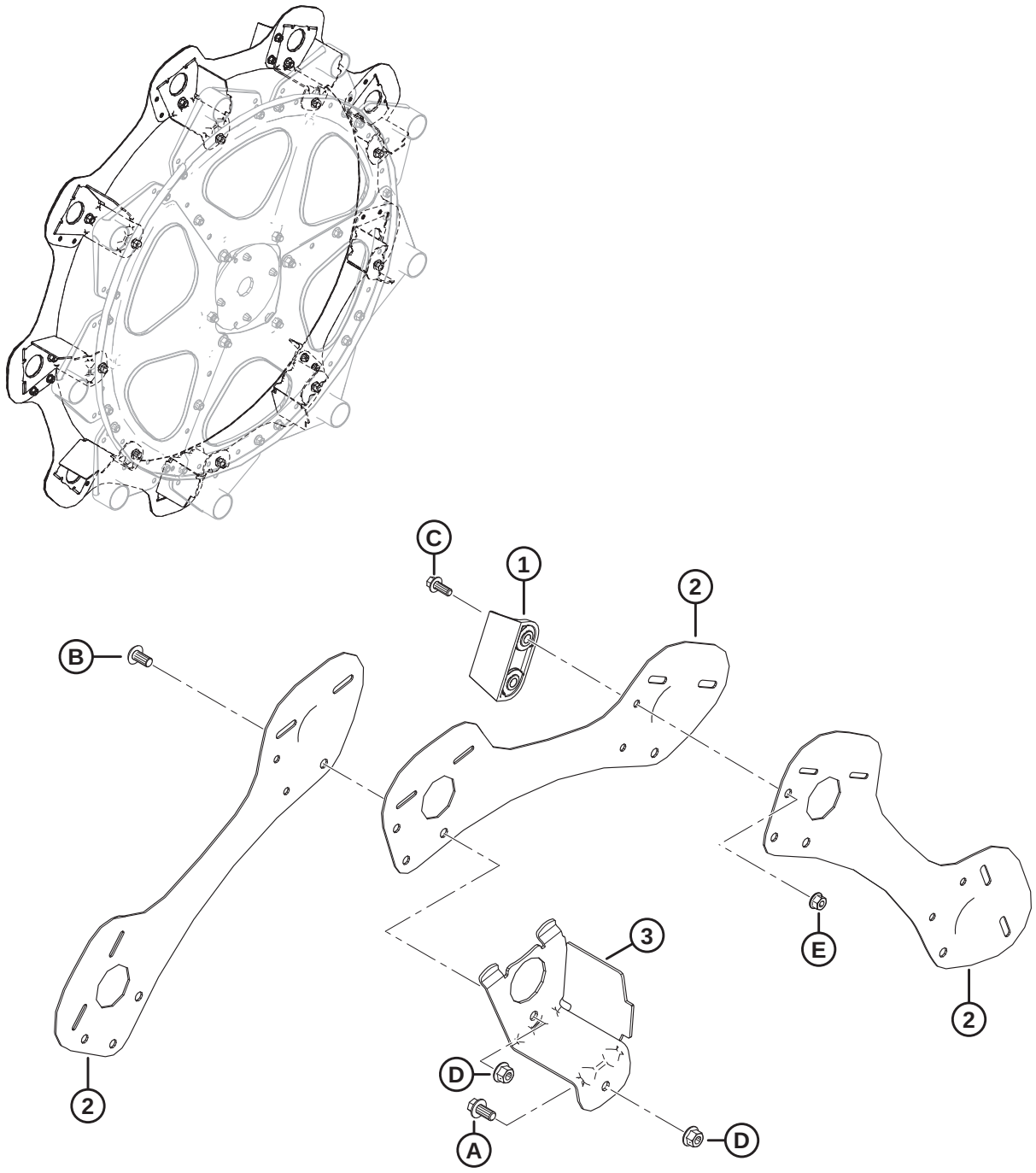

1040313

REEL – ENDSHIELDS, TAIL END, OUTBOARD (9 BAT)

Ref	Part Number	Description	Qty	Serial Number
1	MAC313035	PADDLE – REEL END, HYTREL	3	
2	MAC311864	SHIELD – OUTBOARD LH 9 BAT	9	
3	MAC311965	SUPPORT – WELDT TAIL END	9	
A	MAC152655	BOLT – HEX FLG HD M10 X 1.5 X 20-8.8-AA1J		
B	MAC136395	SCREW – TORX TRUSS HD M10 X 1.5 X 20 X SPCL-8.8-A3L		
C	MAC136300	BOLT – HEX FLG HD TFL M8 X 1.25 X 20-8.8-AA3L		
D	MAC135799	NUT – HEX FLG CTR LOC M10 X 1.5-10		
E	MAC135337	NUT – HEX FLG CTR LK M8 X 1.25-8-AA1J		

50 Reel – Endshields, Cam End, Outboard (5 Bat and 6 Bat)

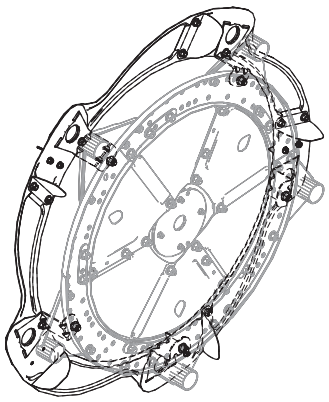

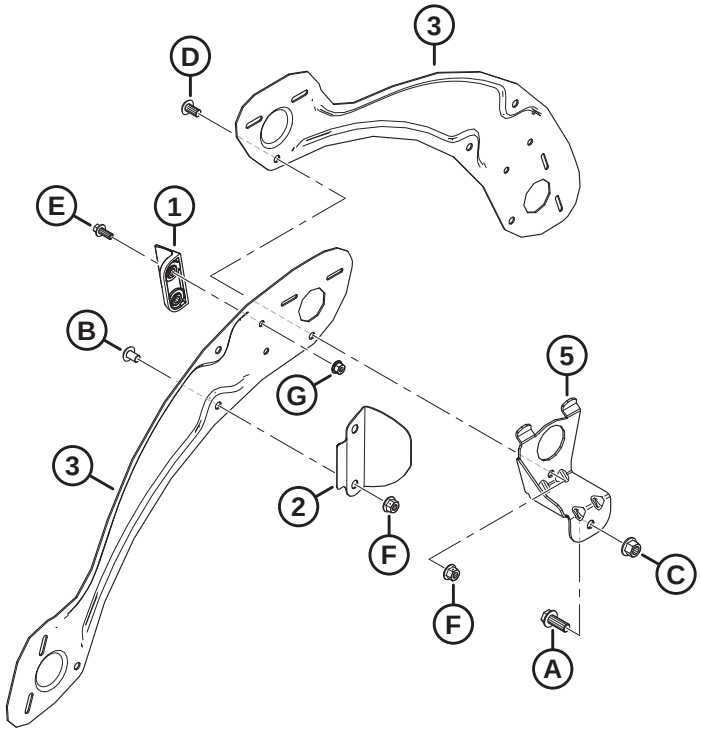

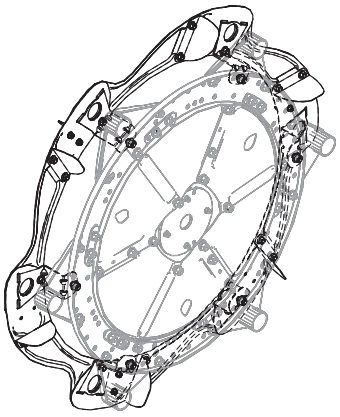

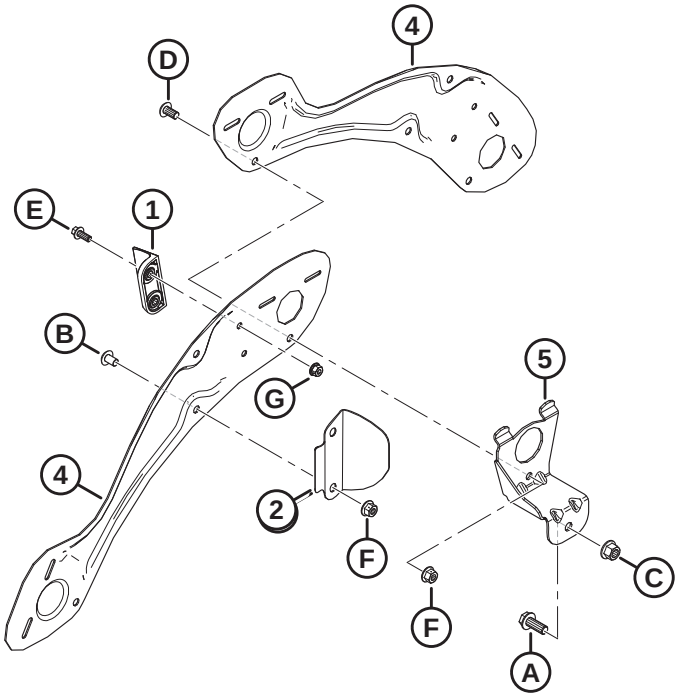

1036486

REEL – ENDSHIELDS, CAM END, OUTBOARD (5 BAT AND 6 BAT)

NOTE:

Illustration; TOP: 5 bat, BOTTOM: 6 bat.

Ref	Part Number	Description	Qty	Serial Number
1	MAC313035	PADDLE – REEL END, HYTREL	3	
2	MAC311729	DEFLECTOR – CAM OUTBOARD [111]		
3	MAC311694	SHIELD – OUTBOARD RH 5 BAT	5	
4	MAC311752	SHIELD – OUTBOARD RH 6 BAT	6	
5	MAC311964	SUPPORT – WELDT CAM END [111]		
A	MAC320180	BOLT – HEX FLG HD M12 X 1.75 X 30-SPCL-8.8-ZINC		
B	MAC136640	SCREW – TORX TRUSS HD M10 X 1.5 X 16 X SPCL-8.8-AA1J		
C	MAC136431	NUT – HEX FLG CTR LOC M12 X 1.75-10		
D	MAC136395	SCREW – TORX TRUSS HD M10 X 1.5 X 20 X SPCL-8.8-A3L		
E	MAC136300	BOLT – HEX FLG HD TFL M8 X 1.25 X 20-8.8-AA3L		
F	MAC135799	NUT – HEX FLG CTR LOC M10 X 1.5-10		
G	MAC135337	NUT – HEX FLG CTR LK M8 X 1.25-8-AA1J		

111. Quantities: 5 bat = 5, 6 bat = 6.

51 Reel – Endshields, Tail End, Outboard (5 Bat and 6 Bat)

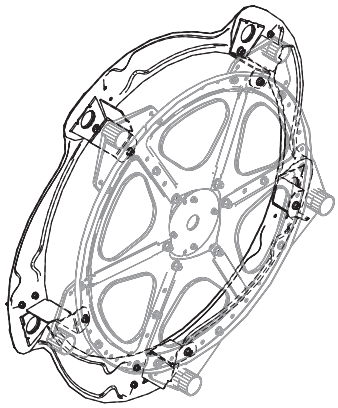

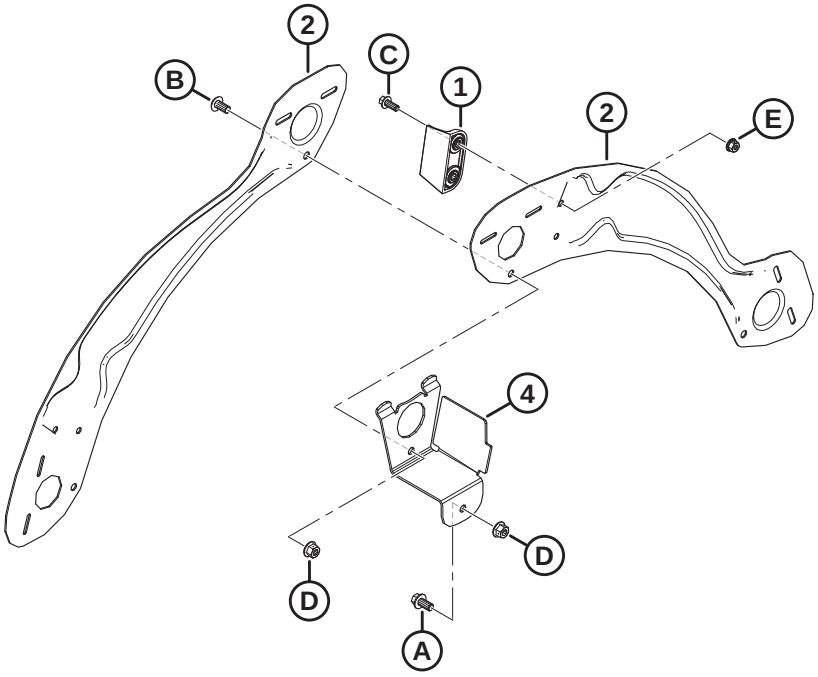

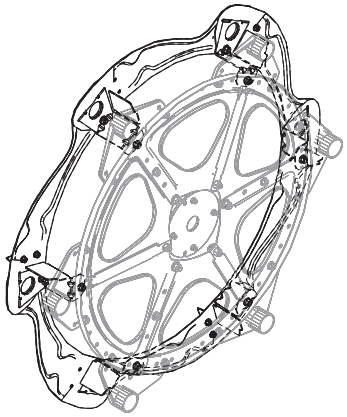

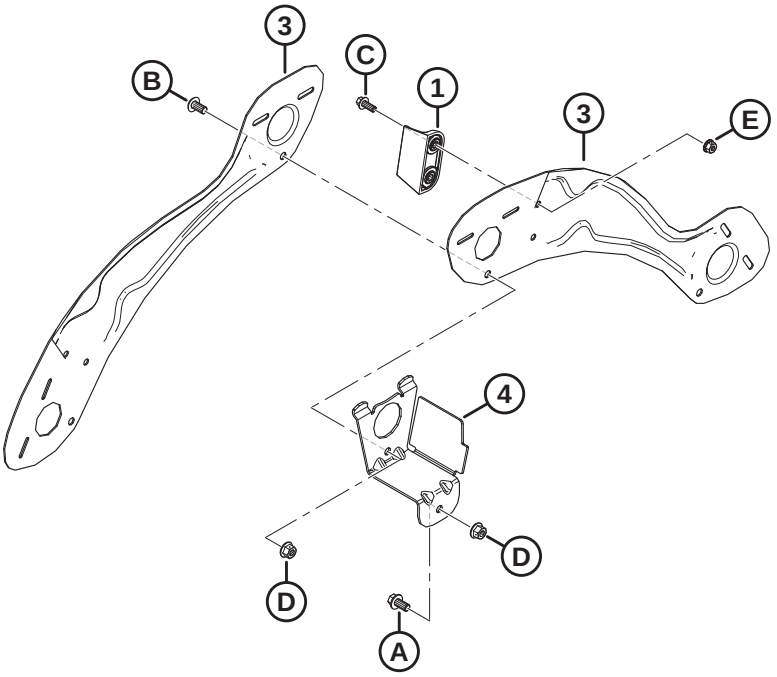

1036771

REEL – ENDSHIELDS, TAIL END, OUTBOARD (5 BAT AND 6 BAT)

NOTE:

Illustration; TOP: 5 bat, BOTTOM: 6 bat.

Ref	Part Number	Description	Qty	Serial Number
1	MAC313035	PADDLE – REEL END, HYTREL	3	
2	MAC311695	SHIELD – OUTBOARD LH 5 BAT	5	
3	MAC311753	SHIELD – OUTBOARD LH 6 BAT	6	
4	MAC311965	SUPPORT – WELDT TAIL END [112]		
A	MAC152655	BOLT – HEX FLG HD M10 X 1.5 X 20-8.8-AA1J		
B	MAC136395	SCREW – TORX TRUSS HD M10 X 1.5 X 20 X SPCL-8.8-A3L		
C	MAC136300	BOLT – HEX FLG HD TFL M8 X 1.25 X 20-8.8-AA3L		
D	MAC135799	NUT – HEX FLG CTR LOC M10 X 1.5-10		
E	MAC135337	NUT – HEX FLG CTR LK M8 X 1.25-8-AA1J		

112. Quantities: 5 bat = 5, 6 bat = 6.

52 Reel – Endshields, Cam End, Inboard (5 Bat and 6 Bat)

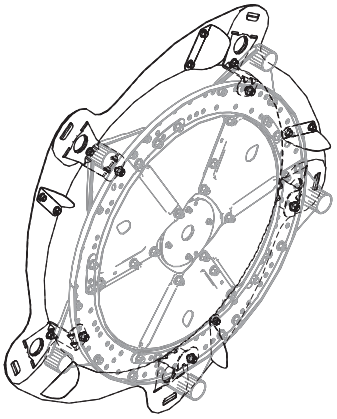

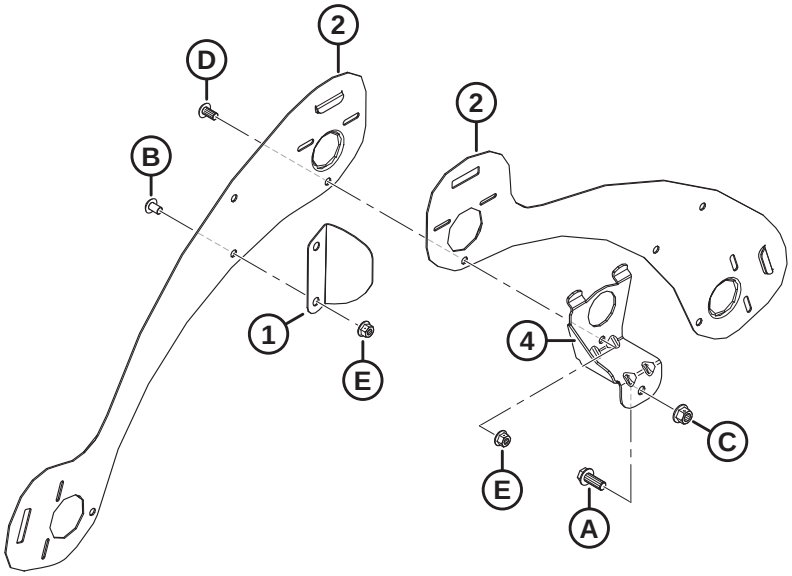

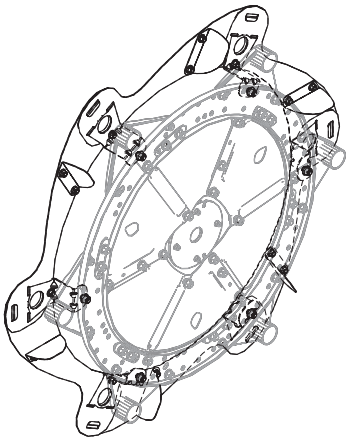

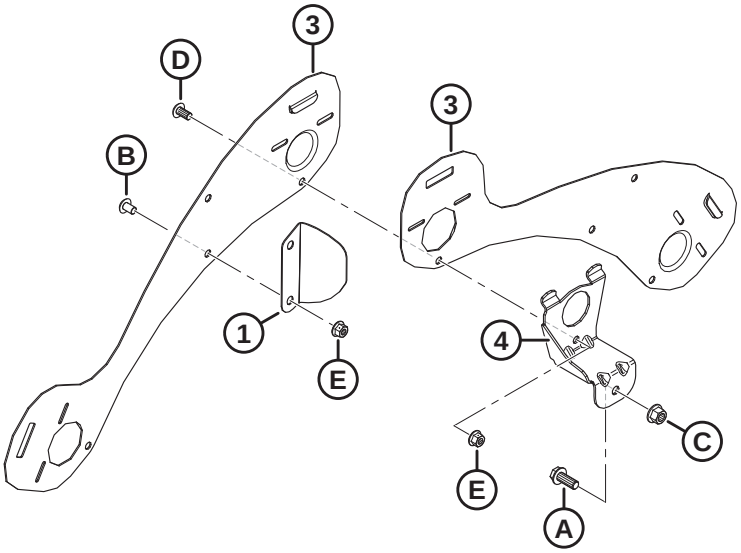

1036485

REEL – ENDSHIELDS, CAM END, INBOARD (5 BAT AND 6 BAT)

NOTE:

Illustration; TOP: 5 bat, BOTTOM: 6 bat.

Ref	Part Number	Description	Qty	Serial Number
1	MAC311906	DEFLECTOR – CAM INBOARD [113]		
2	MAC273823	SHIELD – 5 BAT LH REEL CAM END	5	
3	MAC273813	SHIELD – 6 BAT LH REEL CAM END	6	
4	MAC311964	SUPPORT – WELDT CAM END [113]		
A	MAC320180	BOLT – HEX FLG HD M12 X 1.75 X 30-SPCL-8.8-ZINC		
B	MAC136640	SCREW – TORX TRUSS HD M10 X 1.5 X 16 X SPCL-8.8-AA1J		
C	MAC136431	NUT – HEX FLG CTR LOC M12 X 1.75-10		
D	MAC136395	SCREW – TORX TRUSS HD M10 X 1.5 X 20 X SPCL-8.8-A3L		
E	MAC135799	NUT – HEX FLG CTR LOC M10 X 1.5-10		

113. Quantities: 5 bat = 5, 6 bat = 6.

53 Reel – Endshields, Tail End, Inboard (5 Bat and 6 Bat)

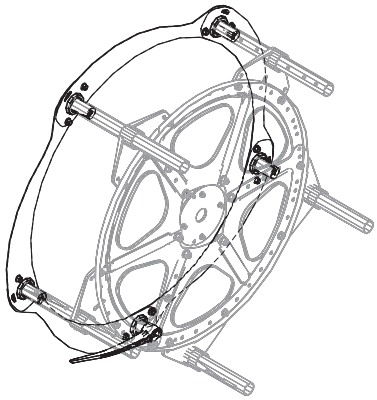

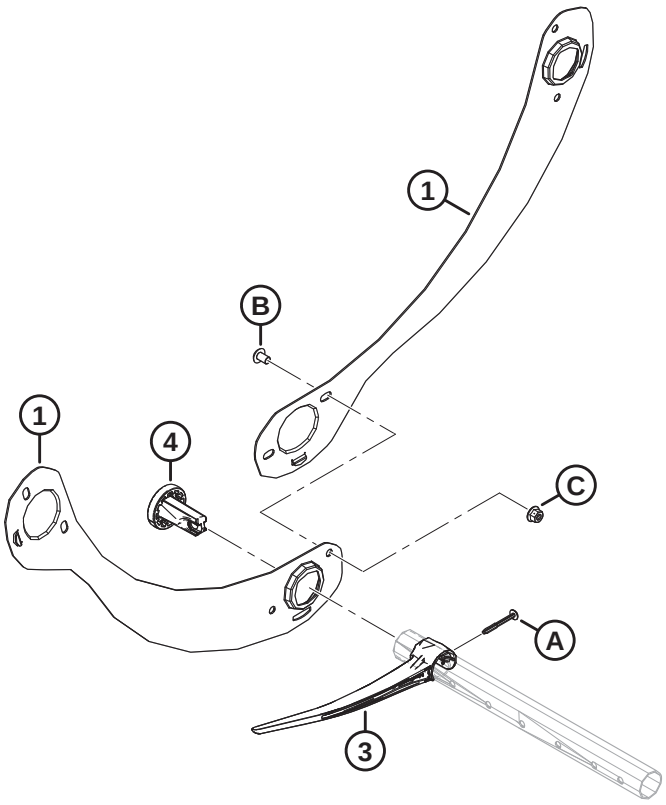

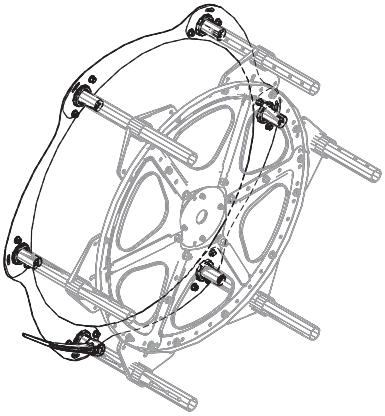

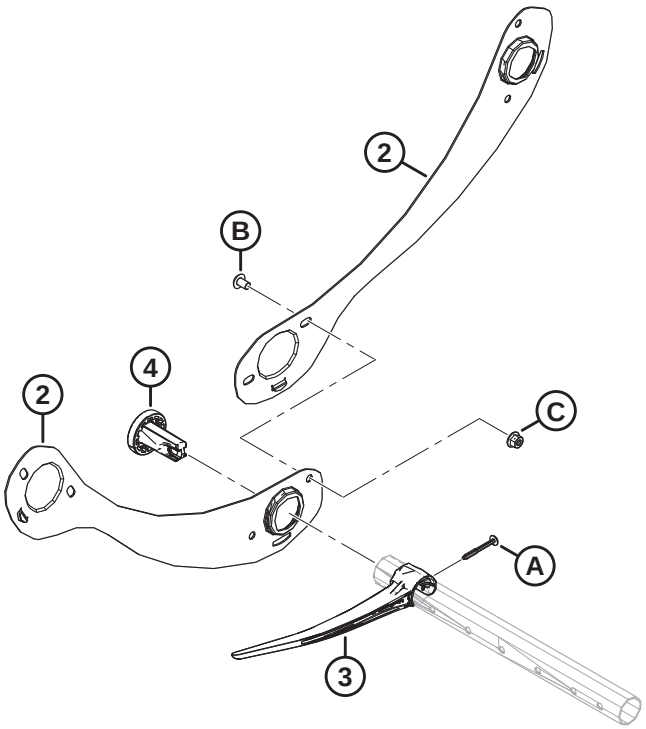

1036769

REEL – ENDSHIELDS, TAIL END, INBOARD (5 BAT AND 6 BAT)

NOTE:

Illustration; TOP: 5 bat, BOTTOM: 6 bat.

Ref	Part Number	Description	Qty	Serial Number
1	MAC311795	SHIELD – 5 BAT RH REEL, TAIL END	5	
2	MAC311822	SHIELD – 6 BAT RH REEL TAIL END	6	
3	MAC311524	FINGER – PLASTIC, LH ANGLED (10 PACK) [114]		
4	MAC273968	BUSHING – ENDSHIELD	5	
A	MAC252687	SCREW – 48° PLASTITE TWIN HELIX		
B	MAC136640	SCREW – TORX TRUSS HD M10 X1.5 X 16 X SPCL-8.8-AA1J		
C	MAC135799	NUT – HEX FLG CTR LOC M10 X 1.5-10		

114. Quantities: 5 bat = 5, 6 bat = 6.

54 Skid Shoes – End and Center

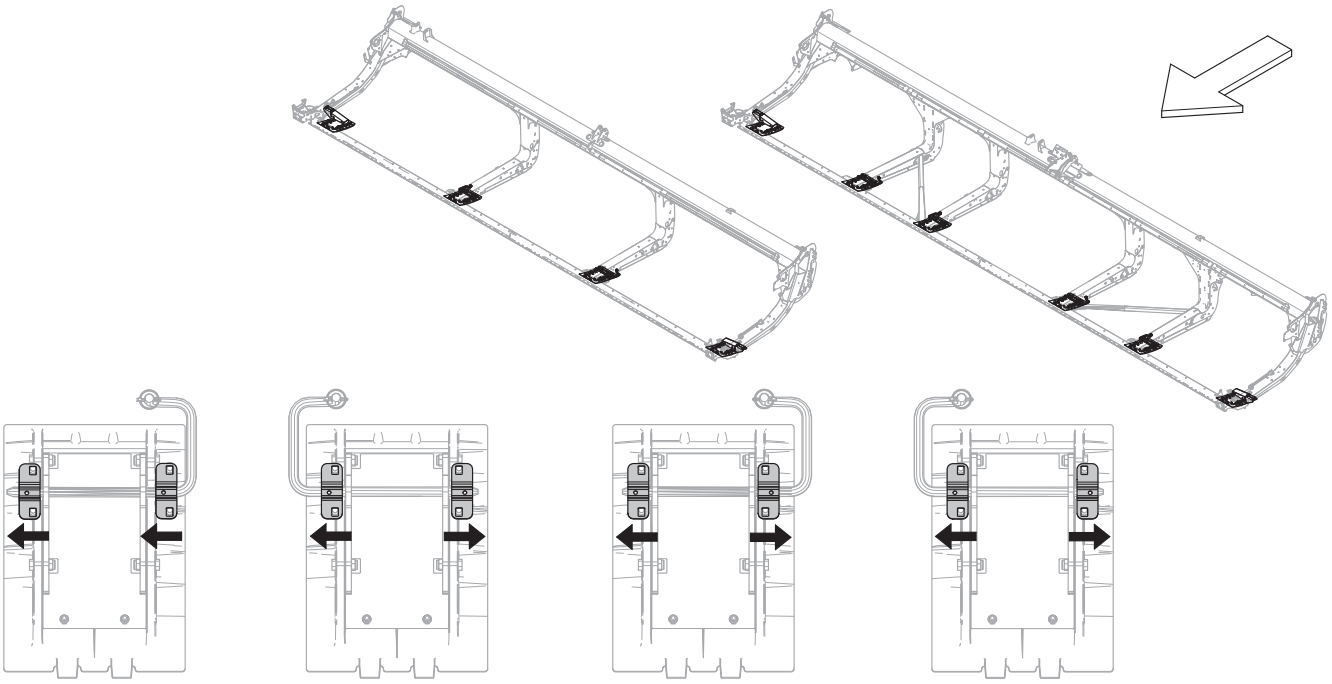

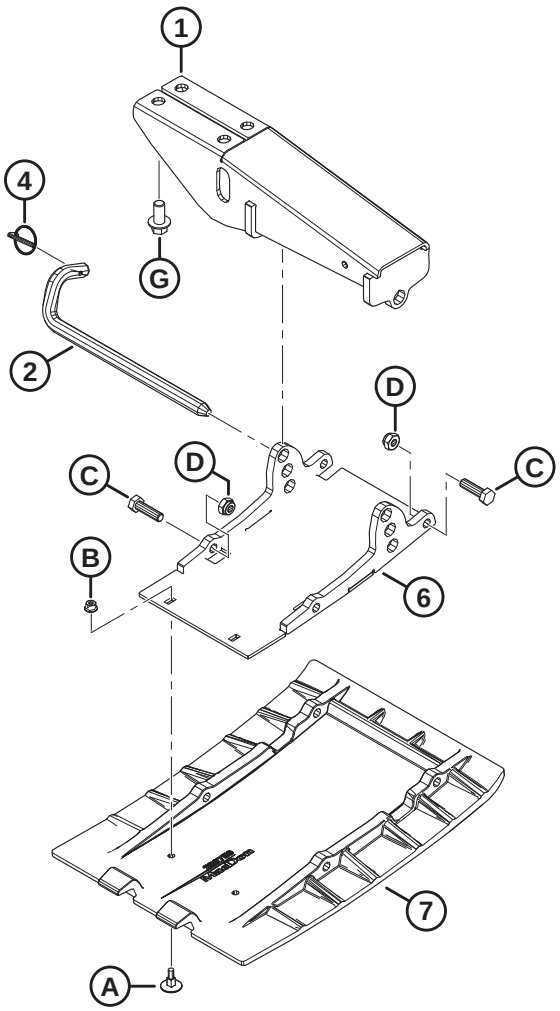

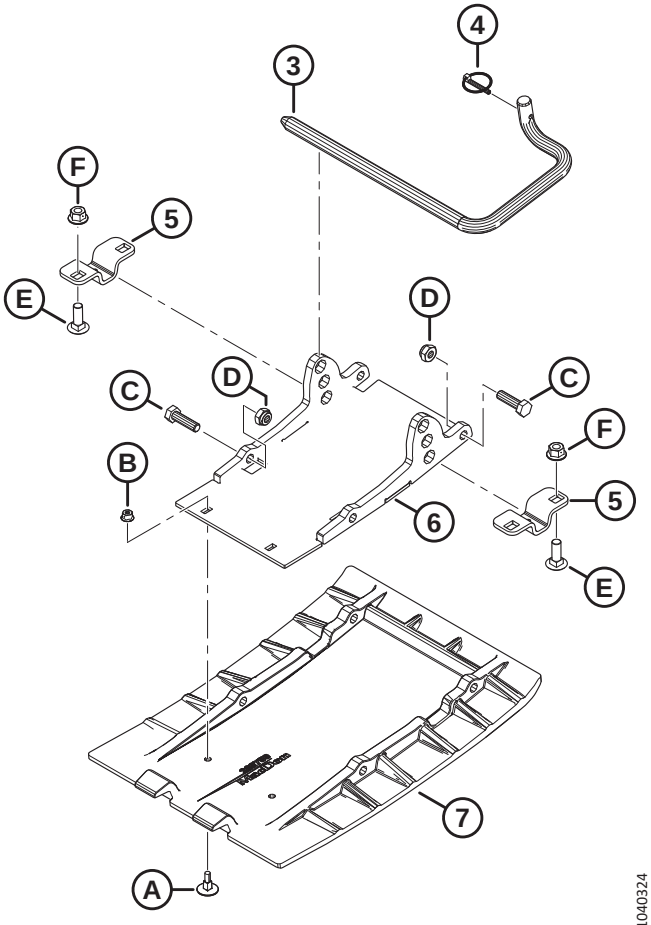

1040324

SKID SHOES – END AND CENTER

Ref	Part Number	Description	Qty	Serial Number
1	MAC312680	MOUNT WELDT – SKID SHOE (END)	2	
2	MAC312675	ROD – ENGAGING	2	
3	MAC165588	ROD – ENGAGING RH [115]	2	
	MAC165168	ROD – ENGAGING LH [115]	2	
4	MAC50193	PIN – LYNCH [116]		
5	MAC232806	BRACKET – SHOE SUPPORT [117]		
6	MAC289869	SUPPORT WELDT – PLATE [116]		
7	MAC289759	SHOE – WEARPLATE, POLYETHYLENE [116]		
A	MAC252176	BOLT – ELEV CSK M6 X 1 X 23-8.8		
B	MAC152668	NUT – HEX FLG CTR LOC M6 X 1-8		
C	MAC30628	BOLT – HEX HD M10 X 1.5 X 35-8.8-AA1J		
D	MAC184692	NUT – HEX NYLOC M10 X 1.5-8-AA1J		
E	MAC184662	BOLT – RHSN TFL M10 X 1.5 X 30-8.8-AA1J		
F	MAC135799	NUT – HEX FLG CTR LOC M10 X 1.5-10		
G	MAC136399	BOLT – HEX FLG HD TFL M12 X 1.75 X 25-8.8-AA1J		

115. Right engaging rod is shown in the illustration. Quantities of RH engaging rod (MAC165588) and LH engaging rod (MAC165168) are one of each for D225 headers, and two of each for D230, D235, D241, and D245 headers.
116. Quantities: D225 = 4; D230, D235, D241, and D245 = 6.
117. Orientation of this bracket varies, be sure to install as per shown for each center skid shoe. Compare location of small hole with arrows. Quantities: D225 = 4; D230, D235, D241, and D245 = 8.

55 Hydraulics – Manifold Fittings and Fasteners

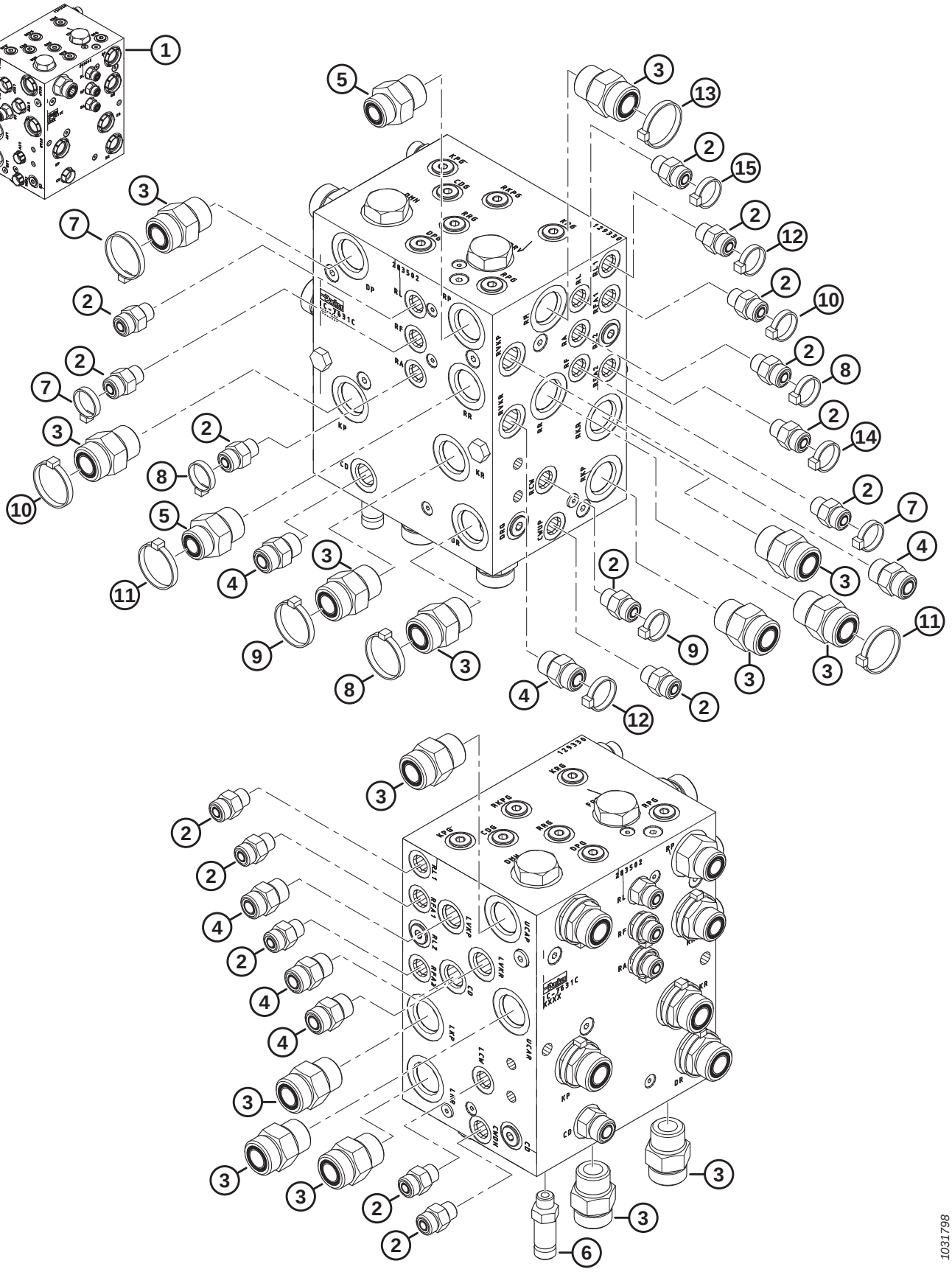

HYDRAULICS – MANIFOLD FITTINGS AND FASTENERS

Ref	Part Number	Description	Qty	Serial Number
1	MAC283502	MANIFOLD ASSY – DK UNTIMED	A/R	
	MAC283500	MANIFOLD ASSY – SK	A/R	
2	MAC135778	FITTING – ADAPTER	15	
	MAC50219	O-RING – Ø1.98 X Ø11.89		
	MAC135865	O-RING – Ø1.78 X Ø9.25		
3	MAC135788	FITTING – ADAPTER	14	
	MAC30971	O-RING – Ø2.95 X Ø23.47		
	MAC135868	O-RING – Ø1.78 X Ø18.77		
4	MAC135780	FITTING – ADAPTER	6	
	MAC44209	O-RING – Ø2.21 X Ø16.36		
	MAC135866	O-RING – Ø1.78 X Ø12.42		
5	MAC135786	FITTING – ADAPTER	2	
	MAC30971	O-RING – Ø2.95 X Ø23.47		
	MAC135867	O-RING – Ø1.78 X Ø15.60		
6	MAC252902	FITTING – HYD CONNECTOR, LONG	1	
	MAC50219	O-RING – Ø1.98 X Ø11.89		
	MAC135865	O-RING – Ø1.78 X Ø9.25		
7	MAC49227	FASTENER – CABLE TIE,, GREEN	3	
8	MAC40702	FASTENER – CABLE TIE, RED	3	
9	MAC40703	FASTENER – CABLE TIE, BLUE	2	
10	MAC40704	FASTENER – CABLE TIE, ORANGE	2	
11	MAC40701	FASTENER – CABLE TIE, YELLOW	2	
12	MAC252795	FASTENER – CABLE TIE, PINK	2	
13	MAC49232	FASTENER – CABLE TIE, WHITE	1	
14	MAC135266	FASTENER – CABLE TIE, LIGHT BLUE	1	
15	MAC21763	FASTENER – CABLE TIE, BLACK	1	

56 Hydraulics – Manifold Plugs

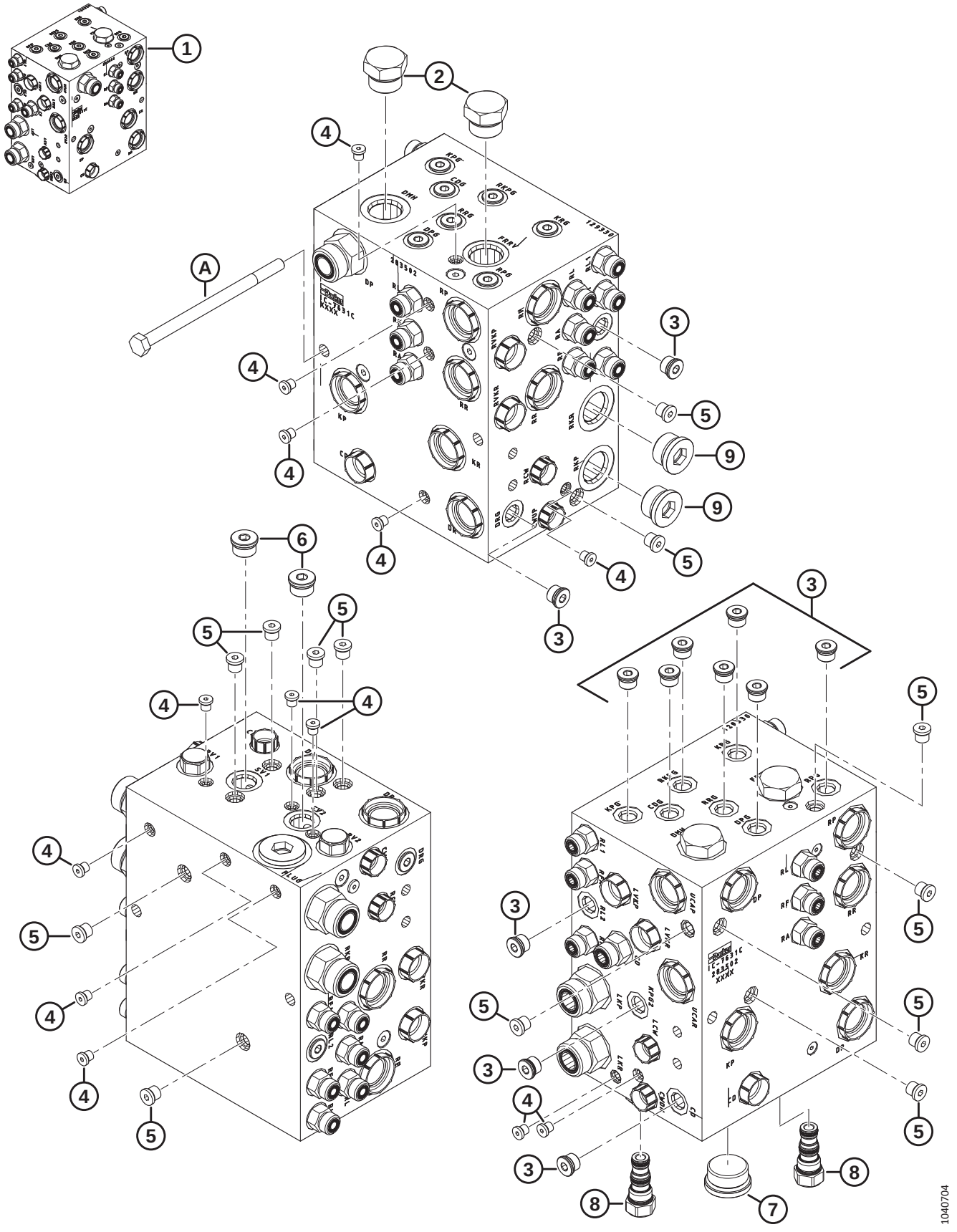

Ref	Part Number	Description	Qty	Serial Number
1	MAC283502	MANIFOLD ASSY – DK UNTIMED	A/R	
	MAC283500	MANIFOLD ASSY – SK	A/R	
2	MAC103575	PLUG – HEX C/W O-RING	2	
3	MAC100577	PLUG – HEX SOCKET C/W O-RING	12	
	MAC50219	O-RING – Ø1.98 X Ø11.89		
4	MAC135952	PLUG – HEX SOCKET C/W O-RING	13	
5	MAC102711	PLUG – HEX SOCKET C/W O-RING	13	
6	MAC158174	PLUG – HEX SOCKET C/W O-RING	2	
	MAC44209	O-RING – Ø2.21 X Ø16.36		
7	MAC136524	PLUG – HEX SOCKET	1	
	MAC50220	O-RING – Ø2.95 X Ø29.74		
8	MAC283567	PLUG – CAVITY	2	
	MAC283569	SEAL KIT		
9	MAC136269	FITTING – PLUG HYD 12 ORB HEX SOC [118]	2	
	MAC30971	O-RING – Ø2.95 X Ø23.47		
A	MAC136850	BOLT – HEX HD M10 X 1.5 X 160-8.8-AA1J		

118. Single-knife configurations only.

57 Hydraulics – Knife Drive, Single and Double Knife, Left Side (D225, D230, D235, and D241)

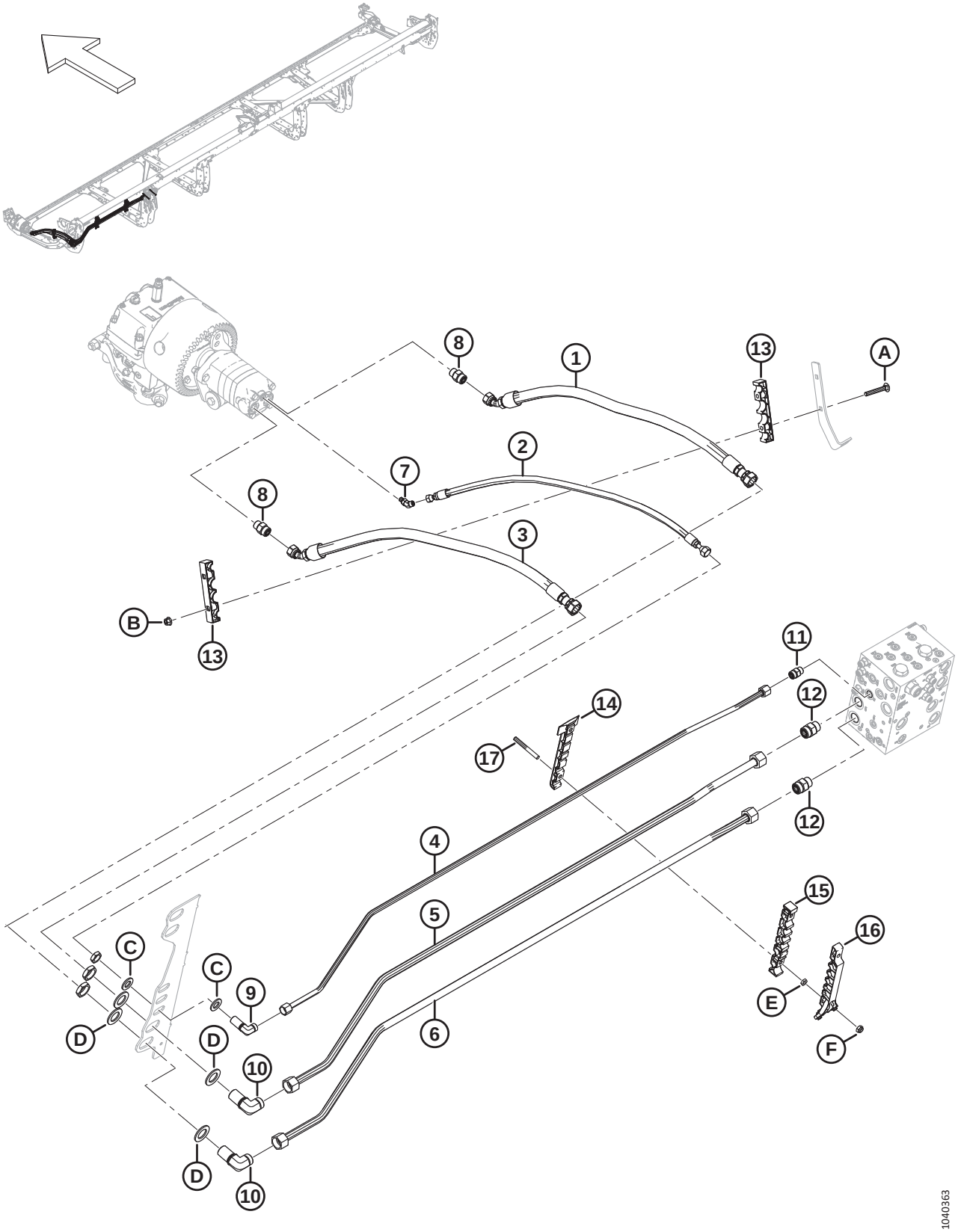

HYDRAULICS – KNIFE DRIVE, SINGLE AND DOUBLE KNIFE, LEFT SIDE (D225, D230, D235, AND D241)

Ref	Part Number	Description	Qty	Serial Number
1	MAC283063	HOSE – HYD	1	
2	MAC283065	HOSE – HYD	1	
3	MAC283202	HOSE – HYD	1	
4	MAC283233	LINE – HYDRAULIC (D225) [119]	1	
	MAC283048	LINE – HYDRAULIC (D230) [120]	1	
	MAC283201	LINE – HYDRAULIC (D235) [121]	1	
	MAC283458	LINE – HYDRAULIC (D241) [122]	1	
5	MAC283232	LINE – HYDRAULIC (D225) [119]	1	
	MAC283047	LINE – HYDRAULIC (D230) [120]	1	
	MAC283104	LINE – HYDRAULIC (D235) [121]	1	
	MAC283457	LINE – HYDRAULIC (D241) [122]	1	
6	MAC283231	LINE – HYDRAULIC (D225) [119]	1	
	MAC283046	LINE – HYDRAULIC (D230) [120]	1	
	MAC283102	LINE – HYDRAULIC (D235) [121]	1	
	MAC283456	LINE – HYDRAULIC (D241) [122]	1	
7	MAC252307	FITTING – ELBOW 45° HYD	1	
	MAC50223	O-RING – Ø1.83 X Ø8.92		
	MAC135957	O-RING – Ø1.78 X Ø7.65		
8	MAC184461	FITTING – ADAPTER HYD	2	
	MAC44210	O-RING – Ø2.46 X Ø19.18		
	MAC135867	O-RING – Ø1.78 X Ø15.60		
9	MAC136244	FITTING – ELBOW 90° BULKHEAD HYD [123]	1	
	MAC135866	O-RING – Ø1.78 X Ø12.42		
10	MAC136245	FITTING – ELBOW 90° BULKHEAD HYD [123]	2	
	MAC135868	O-RING – Ø1.78 X Ø18.77		

119. Used on D225 headers only.
120. Used on D230 headers only.
121. Used on D235 headers only.
122. Used on D241 headers only.
123. The fitting includes a securing nut.

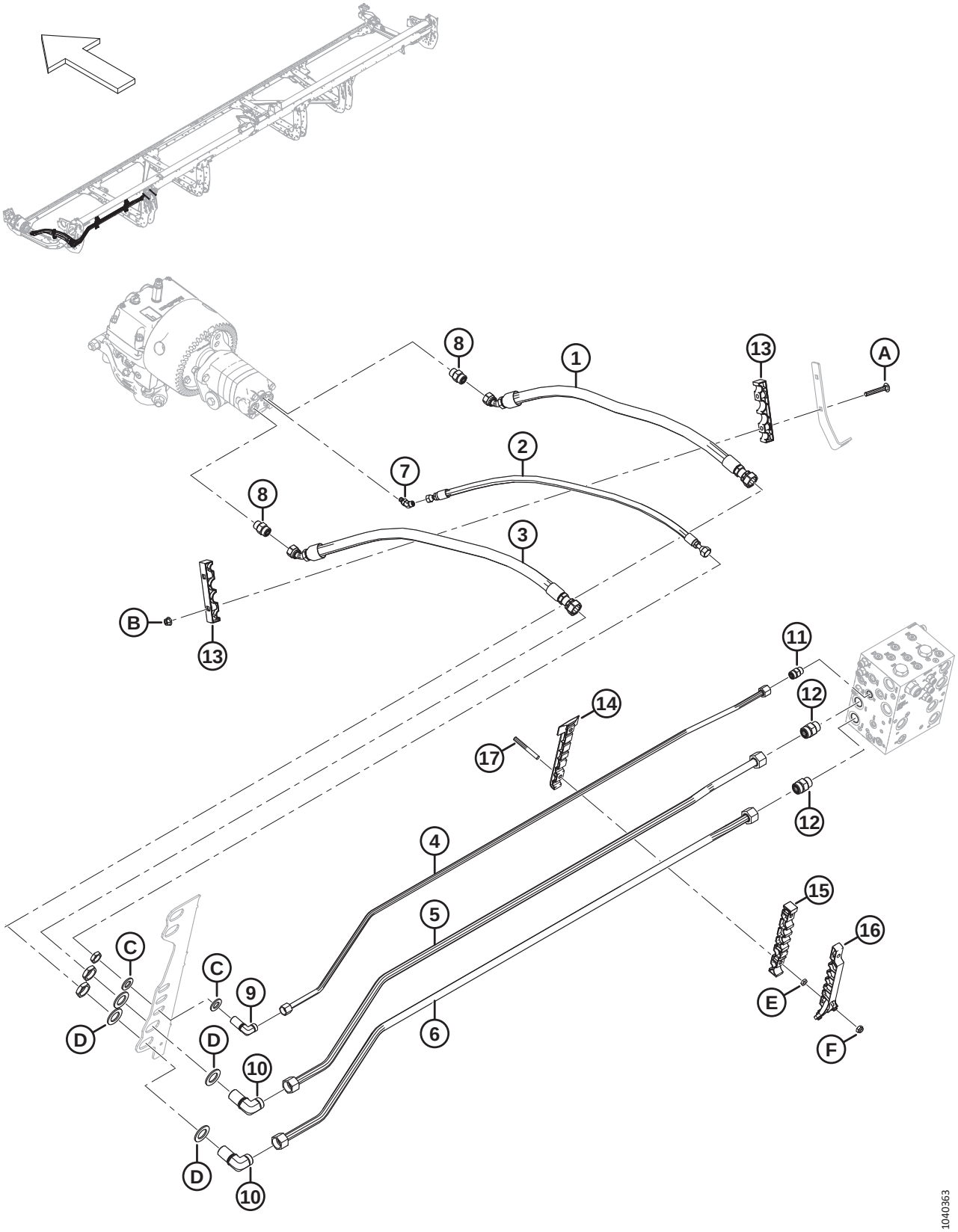
1040363

Ref	Part Number	Description	Qty	Serial Number
11	MAC135780	FITTING – ADAPTER	1	
	MAC44209	O-RING – Ø2.21 X Ø16.36		
	MAC135866	O-RING – Ø1.78 X Ø12.42		
12	MAC135788	FITTING – ADAPTER	2	
	MAC30971	O-RING – Ø2.95 X Ø23.47		
	MAC135868	O-RING – Ø1.78 X Ø18.77		
13	MAC283984	CLAMP – LINE KNIFE	2	
14	MAC283797	CLAMP – LINE BOTTOM LH [124]		
15	MAC283807	CLAMP – LINE MIDDLE LH		
16	MAC340548	KIT – LH TOP LINE CLAMP [125]		
17	MAC312654	STUD – THRD CLAMP PATCH WING [126]		
A	MAC136495	BOLT – RHSN M10 X 1.5 X 70-8.8-AA1J		
B	MAC135799	NUT – HEX FLG CTR LOC M10 X 1.5-10		
C	MAC18601	WASHER – FLAT SAE		
D	MAC136355	WASHER – FLAT 2.0 IN OD ZP		
E	MAC136442	NUT – HEX THIN M10 X 1.5-05-AA1J		
F	MAC184692	NUT – HEX NYLOC M10 X 1.5-8-AA1J		

124. Quantities: D225 = 1, D230 = 2, D235 = 3, and D241 = 4.
125. Includes LH top line clamp (NSS) and two Torx screws (MAC320336). Quantities: D225 = 1, D230 = 2, D235 = 3, and D241 = 4.
126. Quantities: D225 = 2, D230 = 4, D235 = 6, and D241 = 8.

58 Hydraulics – Knife Drive, Double Knife, Left Side (D245)

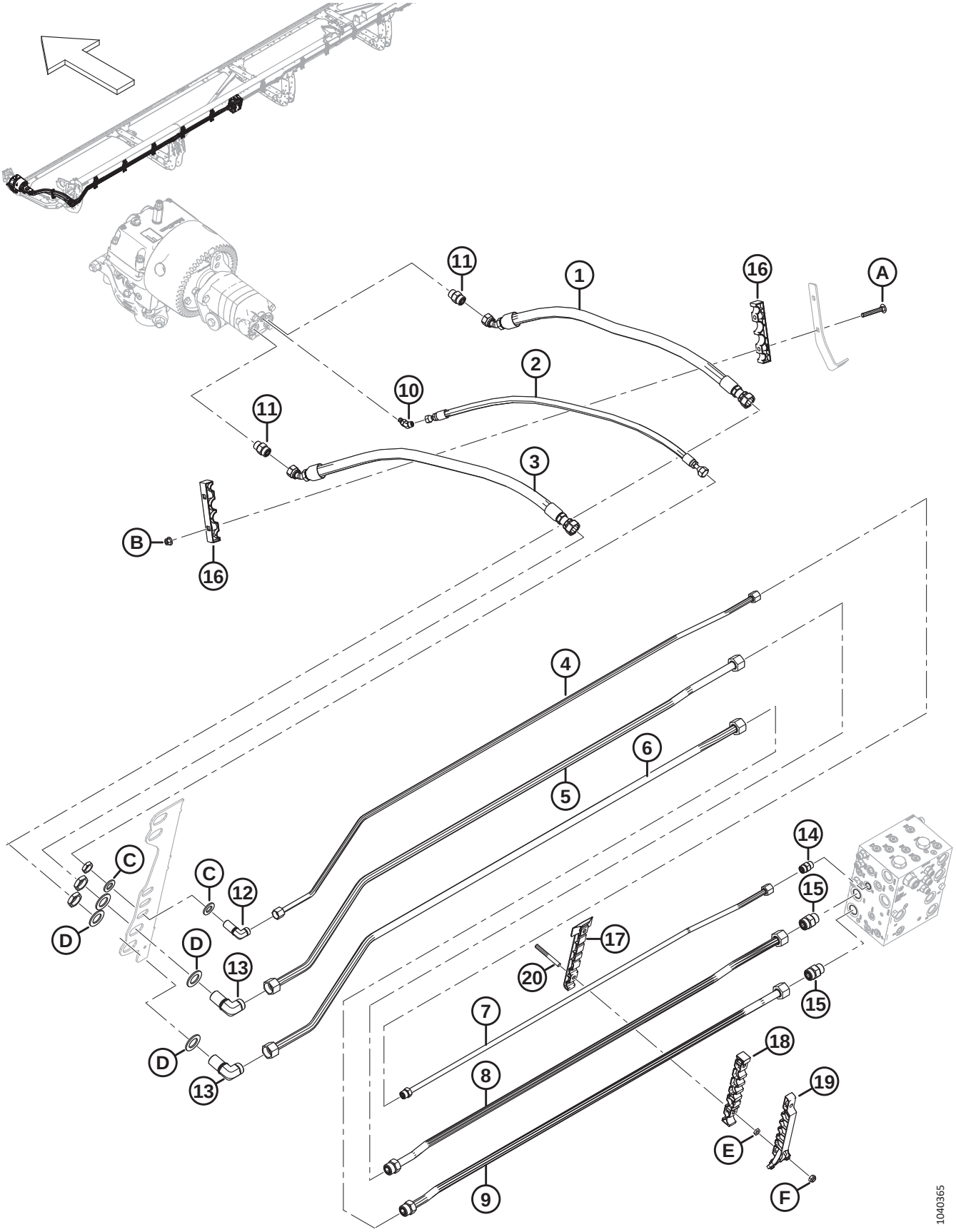

HYDRAULICS – KNIFE DRIVE, DOUBLE KNIFE, LEFT SIDE (D245)

Ref	Part Number	Description	Qty	Serial Number
1	MAC283063	HOSE – HYD	1	
2	MAC283065	HOSE – HYD	1	
3	MAC283202	HOSE – HYD	1	
4	MAC283465	LINE – HYDRAULIC (D245)	1	
5	MAC283464	LINE – HYDRAULIC (D245)	1	
6	MAC283463	LINE – HYDRAULIC (D245)	1	
7	MAC283174	LINE – HYDRAULIC (D245)	1	
	MAC135866	O-RING – Ø1.78 X Ø12.42		
8	MAC283173	LINE – HYDRAULIC (D245)	1	
	MAC135868	O-RING – Ø1.78 X Ø18.77		
9	MAC283172	LINE – HYDRAULIC (D245)	1	
	MAC135868	O-RING – Ø1.78 X Ø18.77		
10	MAC252307	FITTING – ELBOW 45° HYD	1	
	MAC50223	O-RING – Ø1.83 X Ø8.92		
	MAC135957	O-RING – Ø1.78 X Ø7.65		
11	MAC184461	FITTING – ADAPTER HYD	2	
	MAC44210	O-RING – Ø2.46 X Ø19.18		
	MAC135867	O-RING – Ø1.78 X Ø15.60		
12	MAC136244	FITTING – ELBOW 90° BULKHEAD HYD [127]	1	
	MAC135866	O-RING – Ø1.78 X Ø12.42		
13	MAC136245	FITTING – ELBOW 90° BULKHEAD HYD [127]	2	
	MAC135868	O-RING – Ø1.78 X Ø18.77		
14	MAC135780	FITTING – ADAPTER	1	
	MAC44209	O-RING – Ø2.21 X Ø16.36		
	MAC135866	O-RING – Ø1.78 X Ø12.42		
15	MAC135788	FITTING – ADAPTER	2	
	MAC30971	O-RING – Ø2.95 X Ø23.47		
	MAC135868	O-RING – Ø1.78 X Ø18.77		
16	MAC283984	CLAMP – LINE KNIFE	2	
17	MAC283797	CLAMP – LINE BOTTOM LH	5	

127. The fitting includes a securing nut.

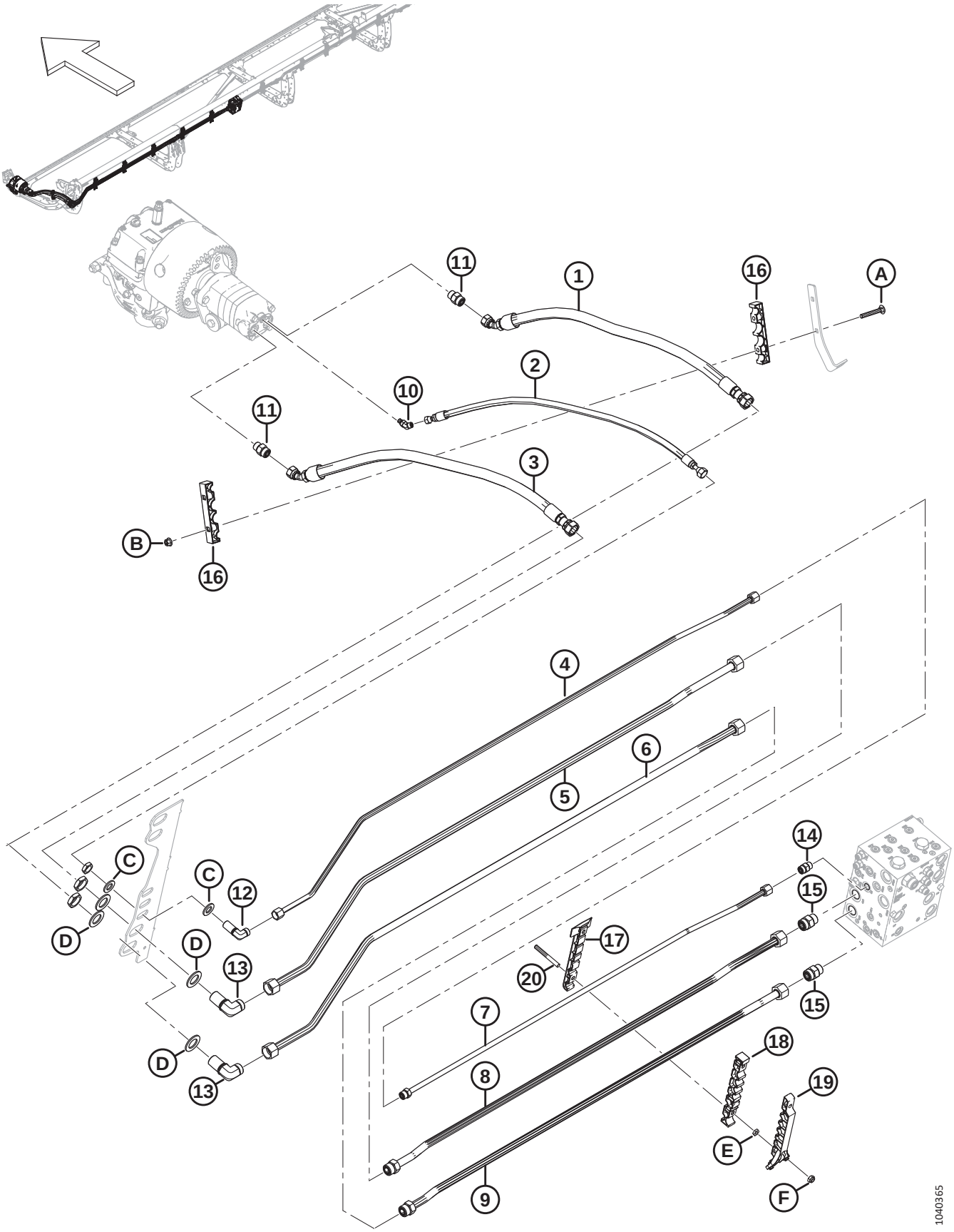
11
1
16
A
2
10
11
3
B
16
4
5
6
C
C
12
D
D
13
D
13
14
15
17
20
7
8
9
15
18
19
E
F
1040365

Ref	Part Number	Description	Qty	Serial Number
18	MAC283807	CLAMP – LINE MIDDLE LH	5	
19	MAC340548	KIT – LH TOP LINE CLAMP [128]	5	
20	MAC312654	STUD – THRD CLAMP PATCH WING	10	
A	MAC136495	BOLT – RHSN M10 X 1.5 X 70-8.8-AA1J	2	
B	MAC135799	NUT – HEX FLG CTR LOC M10 X 1.5-10	2	
C	MAC18601	WASHER – FLAT SAE	2	
D	MAC136355	WASHER – FLAT 2.0 IN OD ZP	4	
E	MAC136442	NUT – HEX THIN M10 X 1.5-05-AA1J		
F	MAC184692	NUT – HEX NYLOC M10 X 1.5-8-AA1J		

128. Includes LH top line clamp (NSS) and two Torx screws (MAC320336).

59 Hydraulics – Knife Drive, Double Knife, Right Side (D241 and D245)

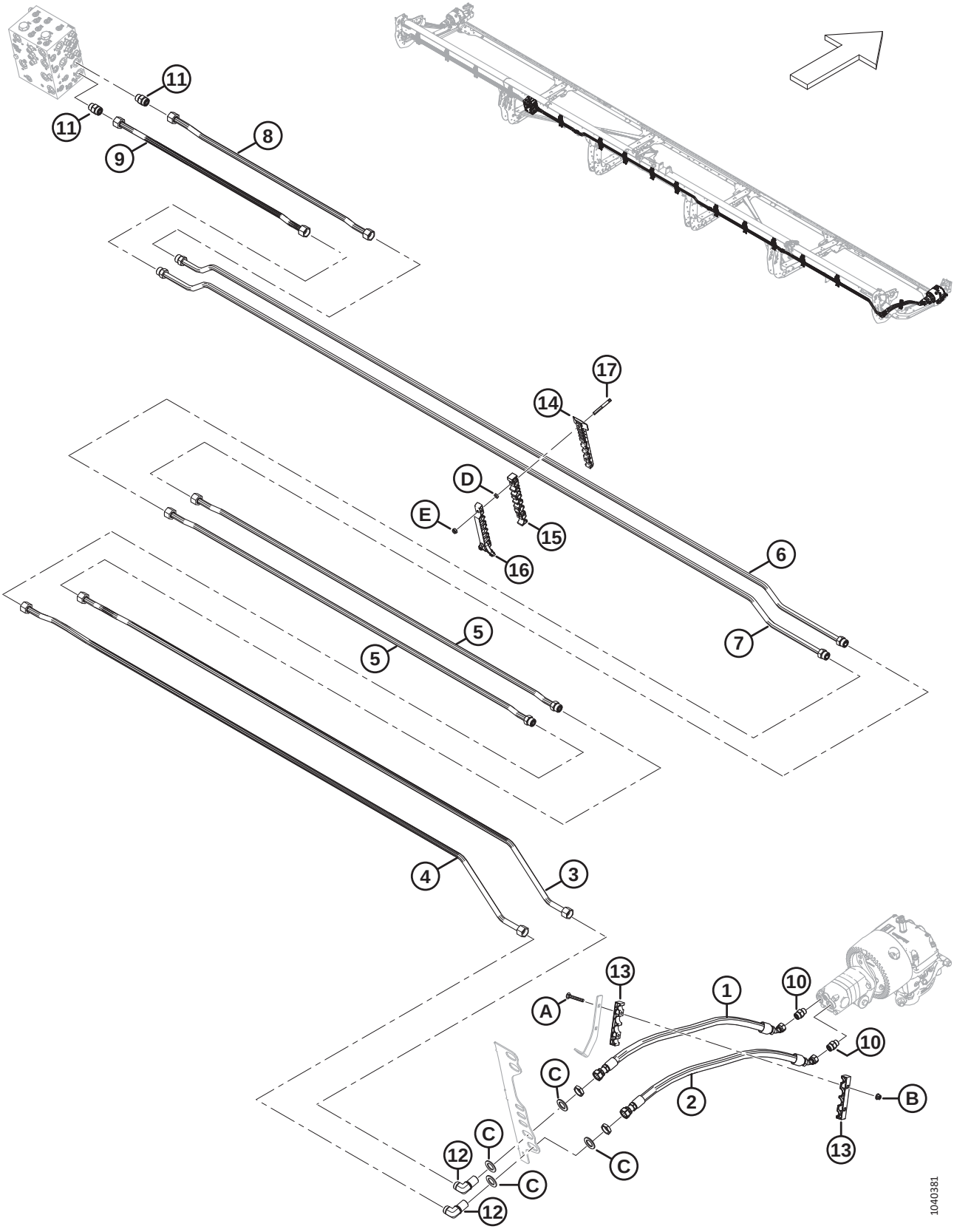

HYDRAULICS – KNIFE DRIVE, DOUBLE KNIFE, RIGHT SIDE (D241 AND D245)

Ref	Part Number	Description	Qty	Serial Number
1	MAC283202	HOSE – HYD	1	
2	MAC283063	HOSE – HYD	1	
3	MAC283413	LINE – HYDRAULIC (D241, D245)	1	
4	MAC283412	LINE – HYDRAULIC (D241, D245)	1	
5	MAC283515	LINE – HYDRAULIC (D241) [129]	2	
	MAC283519	LINE – HYDRAULIC (D245) [130]	2	
	MAC135868	O-RING – Ø1.78 X Ø18.77		
6	MAC283242	LINE – HYDRAULIC (D241, D245)	1	
	MAC135868	O-RING – Ø1.78 X Ø18.77		
7	MAC283239	LINE – HYDRAULIC (D241, D245)	1	
	MAC135868	O-RING – Ø1.78 X Ø18.77		
8	MAC283243	LINE – HYDRAULIC (D241, D245)	1	
9	MAC283238	LINE – HYDRAULIC (D241, D245)	1	
10	MAC184461	FITTING – ADAPTER HYD	2	
	MAC44210	O-RING Ø2.46 X Ø19.18		
	MAC135867	O-RING Ø1.78 X Ø15.60		
11	MAC135788	FITTING – ADAPTER	2	
	MAC30971	O-RING – Ø2.95 X Ø23.47		
	MAC135868	O-RING – Ø1.78 X Ø18.77		
12	MAC136245	FITTING – ELBOW 90° BULKHEAD HYD [131]	2	
	MAC135868	O-RING – Ø1.78 X Ø18.77		
13	MAC283984	CLAMP – LINE KNIFE	2	
14	MAC283820	CLAMP – LINE BOTTOM RH	10	
15	MAC283818	CLAMP – LINE MIDDLE RH	10	
16	MAC340549	KIT – RH TOP LINE CLAMP [132]	10	
17	MAC312654	STUD – THRD CLAMP PATCH WING	20	
A	MAC136495	BOLT – RHSN M10 X 1.5 X 70-8.8-AA1J		

129. Used on D241 headers only.
130. Used on D245 headers only.
131. The fitting includes a securing nut (NSS).
132. Includes RH top line clamp (NSS) and two Torx screws (MAC320336).

HYDRAULICS – KNIFE DRIVE, DOUBLE KNIFE, RIGHT SIDE (D241 AND D245)

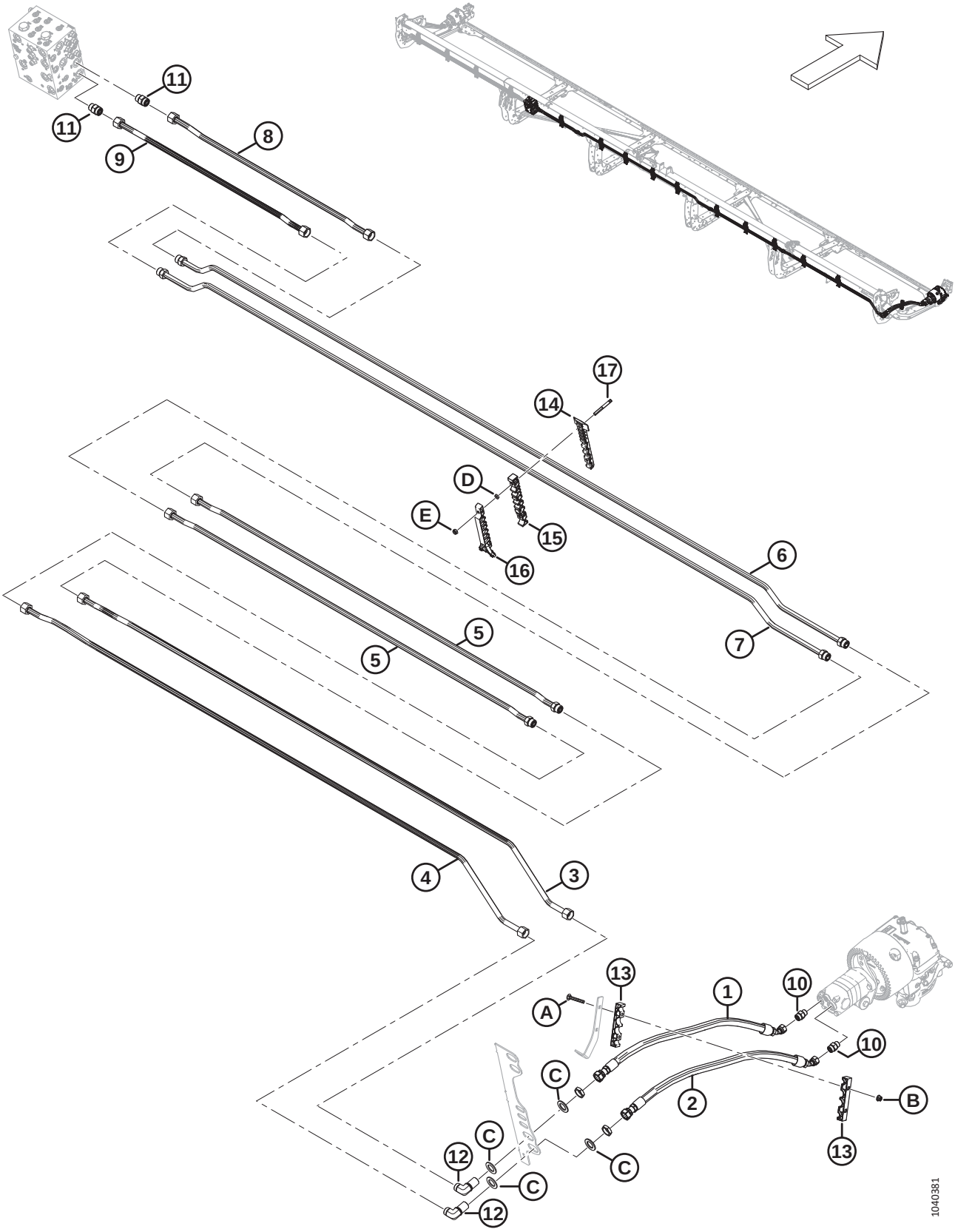

Ref	Part Number	Description	Qty	Serial Number
B	MAC135799	NUT – HEX FLG CTR LOC M10 X 1.5-10		
C	MAC136355	WASHER – FLAT 2.0 IN OD ZP		
D	MAC136442	NUT – HEX THIN M10 X 1.5-05-AA1J		
E	MAC184692	NUT – HEX NYLOC M10 X 1.5-8-AA1J		

60 Hydraulics – Draper Drive, Center Delivery

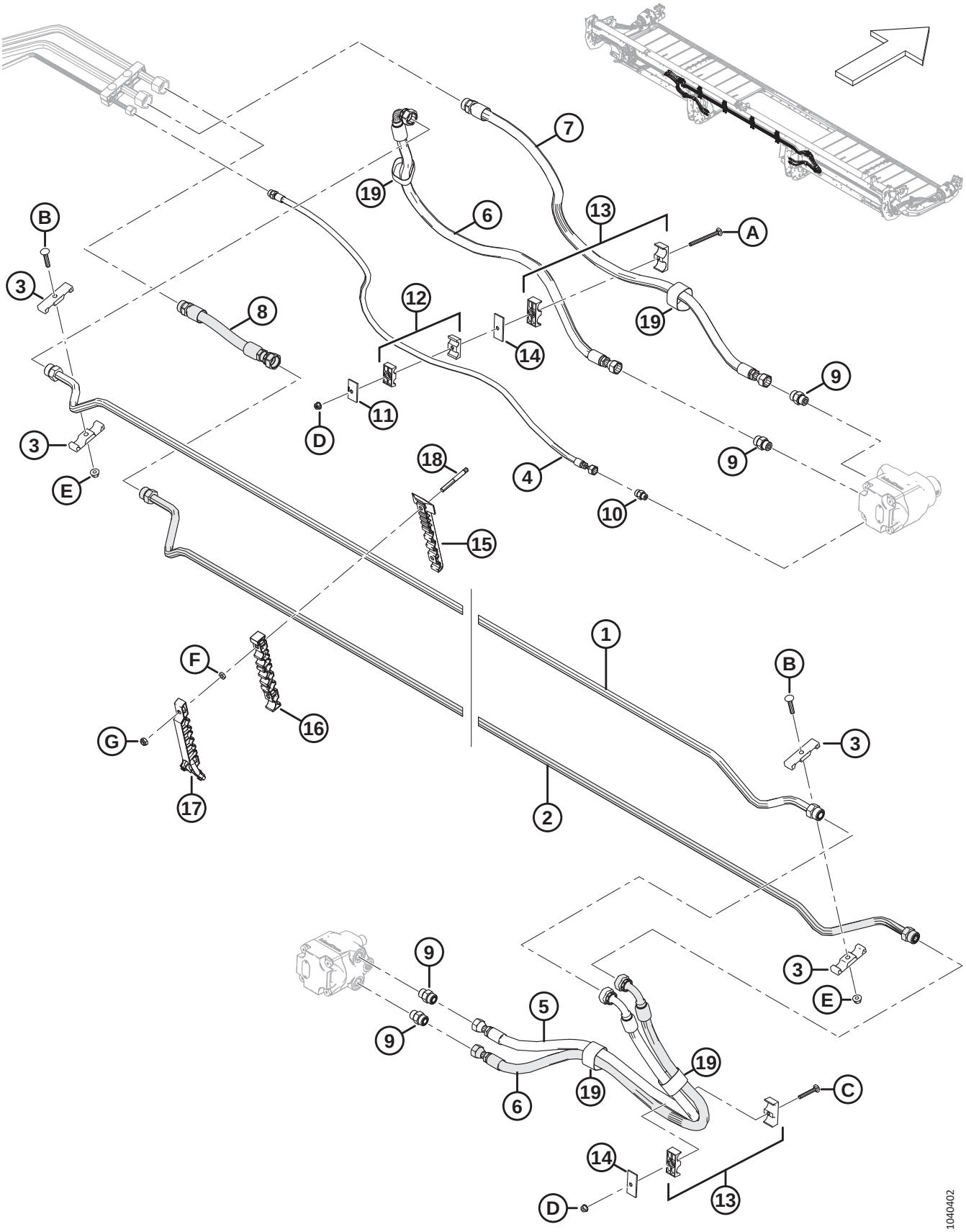

Ref	Part Number	Description	Qty	Serial Number
1	MAC283245	LINE – HYDRAULIC	1	
	MAC135868	O-RING – Ø1.78 X Ø18.77		
2	MAC283244	LINE – HYDRAULIC	1	
	MAC135868	O-RING – Ø1.78 X Ø18.77		
3	MAC283993	CLAMP – LINE DRAPER	4	
4	MAC283297	HOSE – HYDRAULIC	1	
	MAC135865	O-RING – Ø1.78 X Ø9.25		
5	MAC283296	HOSE – HYDRAULIC	1	
6	MAC283295	HOSE – HYDRAULIC	2	
7	MAC283294	HOSE – HYDRAULIC	1	
	MAC135868	O-RING – Ø1.78 X Ø18.77		
8	MAC283293	HOSE – HYDRAULIC	1	
	MAC135868	O-RING – Ø1.78 X Ø18.77		
9	MAC184461	FITTING – ADAPTER HYD	4	
	MAC44210	O-RING – Ø2.46 X Ø19.18		
	MAC135867	O-RING – Ø1.78 X Ø15.60		
10	MAC135778	FITTING – ADAPTER	1	
	MAC50219	O-RING – Ø1.98 X Ø11.89		
	MAC135865	O-RING – Ø1.78 X Ø9.25		
11	MAC184303	CLAMP – COVER PLATE	1	
12	MAC232395	CLAMP – ASSY [133]	1	
13	MAC232219	CLAMP – ASSY [133]	2	
14	MAC232233	CLAMP – COVER PLATE	5	
15	MAC283820	CLAMP – LINE BOTTOM RH	4	
16	MAC283818	CLAMP – LINE MIDDLE RH	4	
17	MAC340549	KIT – RH TOP LINE CLAMP [134]	4	
18	MAC312654	STUD – THRD CLAMP PATCH WING	8	
19	MAC135443	CINCH STRAP 4" LG	4	
A	MAC252633	BOLT-RHSN M8X1.25X100-8.8-AA1J		

133. The clamp assembly includes two clamp halves (NSS). It does NOT include the cover plate or hardware.
134. Includes RH top line clamp (NSS) and two Torx screws (MAC320336).

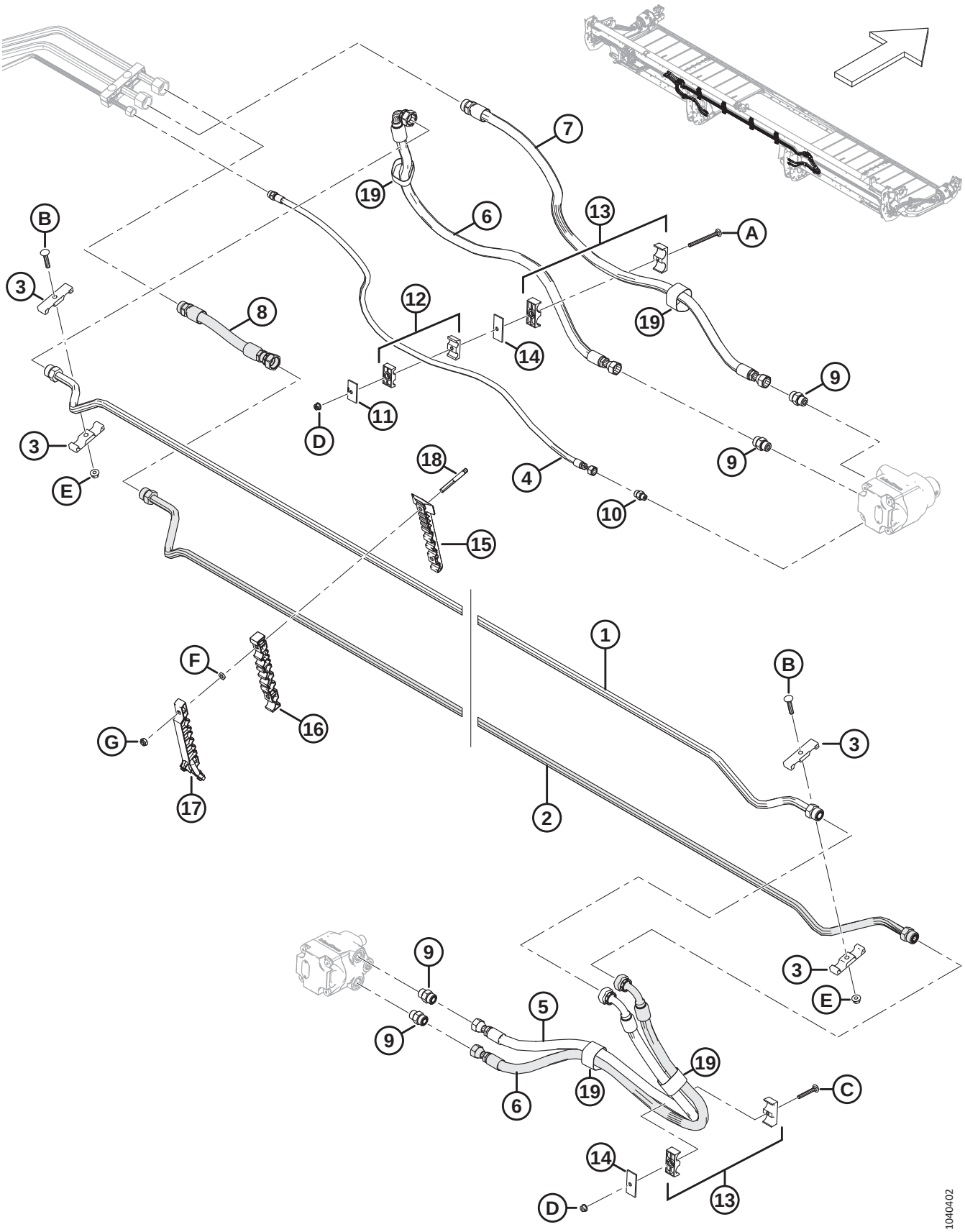
1
2
3
4
5
6
7
8
9
10
11
12
13
14
15
16
17
18
19
A
B
C
D
E
F
G
1040402

Ref	Part Number	Description	Qty	Serial Number
B	MAC184658	BOLT – RHSSN M10 X 1.5 X 50-8.8-AA1J		
C	MAC136486	BOLT – RHSN M8 X 1.25 X 60-8.8-AA1J		
D	MAC135337	NUT – HEX FLG CTR LK M8 X 1.25-8-AA1J		
E	MAC135799	NUT – HEX FLG CTR LOC M10 X 1.5-10		
F	MAC136442	NUT – HEX THIN M10 X 1.5-05-AA1J		
G	MAC184692	NUT – HEX NYLOC M10 X 1.5-8-AA1J		

61 Hydraulics – Draper Drive, Manifold Lines

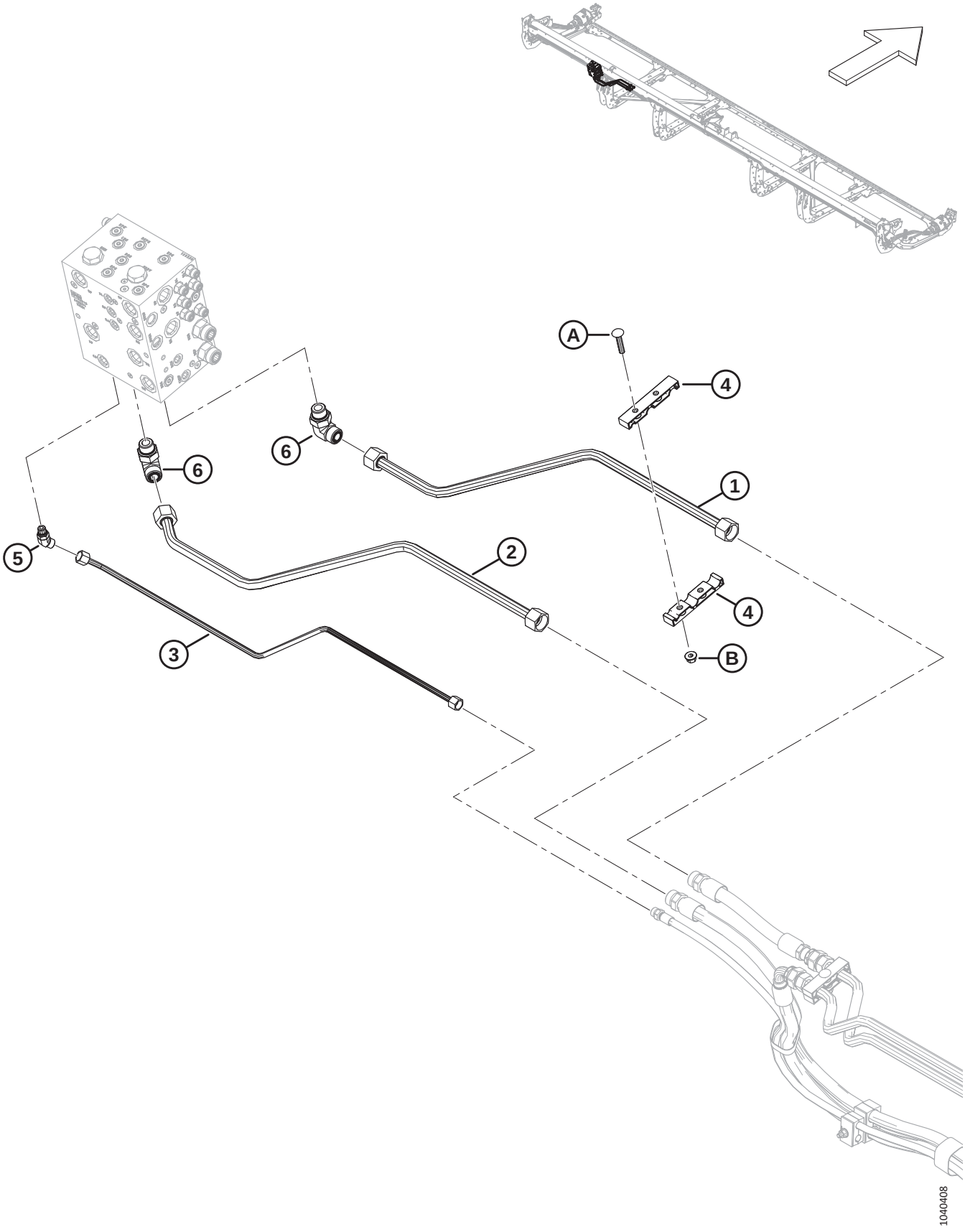

HYDRAULICS – DRAPER DRIVE, MANIFOLD LINES

Ref	Part Number	Description	Qty	Serial Number
1	MAC283283	LINE – HYDRAULIC	1	
2	MAC283284	LINE – HYDRAULIC	1	
3	MAC283285	LINE – HYDRAULIC	1	
4	MAC283990	CLAMP – LINE DRAPER	2	
5	MAC136144	FITTING – ELBOW 45° HYD	1	
	MAC135865	O-RING – Ø1.78 X Ø9.25		
	MAC50219	O-RING – Ø1.98 X Ø11.89		
6	MAC135821	FITTING – ELBOW 90° HYD	2	
	MAC135868	O-RING – Ø1.78 X Ø18.77		
	MAC30971	O-RING – Ø2.95 X Ø23.47		
A	MAC184658	BOLT – RHSSN M10 X 1.5 X 50-8.8-AA1J		
B	MAC135799	NUT – HEX FLG CTR LOC M10 X 1.5-10		

62 Hydraulics – Lift and Fore-Aft, Single Reel, Left Arm (D225)

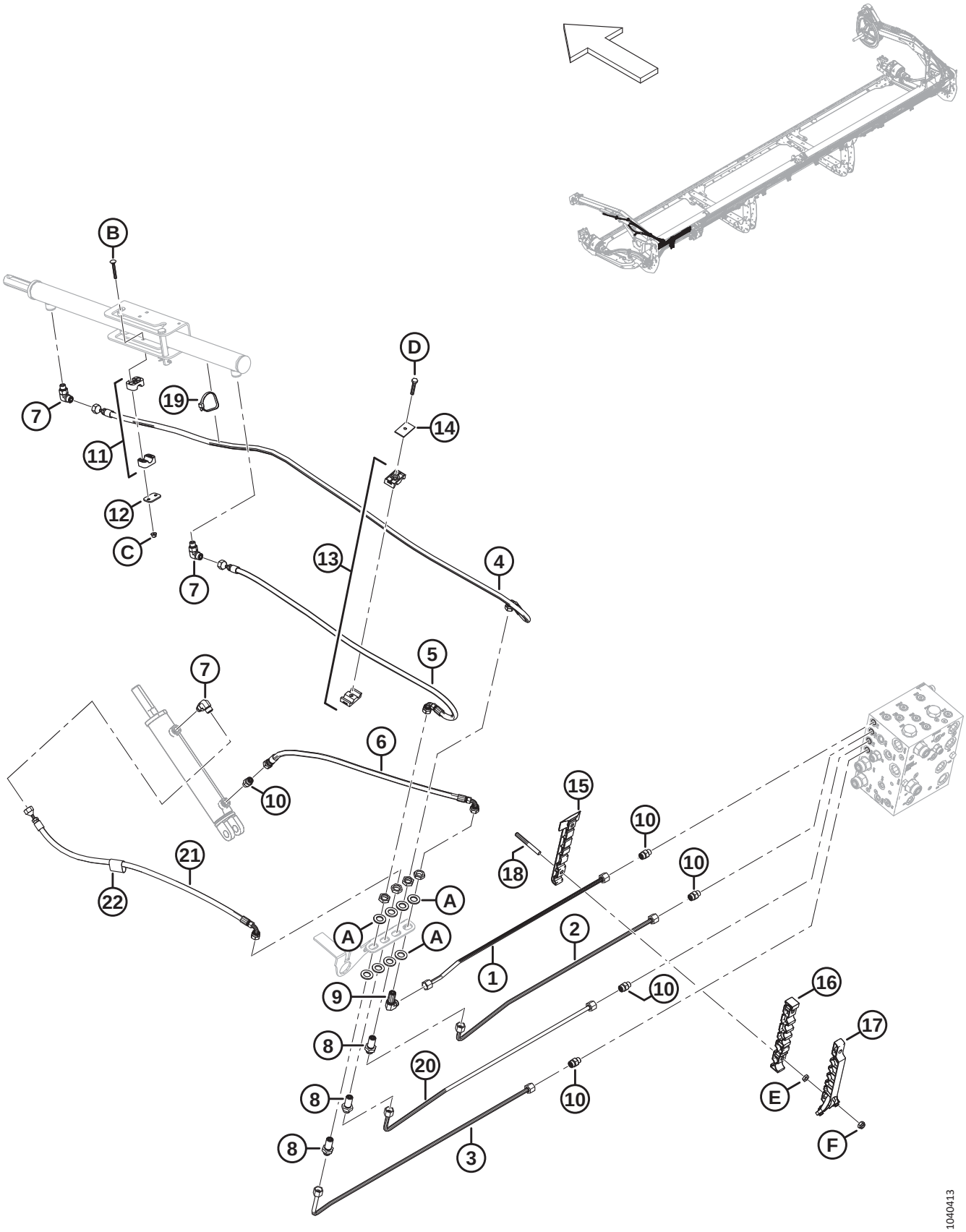

Ref	Part Number	Description	Qty	Serial Number
1	MAC283249	LINE – HYDRAULIC (D225)	1	
2	MAC283248	LINE – HYDRAULIC (D225)	1	
3	MAC283246	LINE – HYDRAULIC (D225)	1	
4	MAC283057	HOSE – HYD	1	
5	MAC283058	HOSE – HYD	1	
6	MAC283059	HOSE – HYD	1	
7	MAC136095	FITTING – ELBOW 90° HYD	3	
8	MAC136145	FITTING – BULKHEAD UNION HYD [135]	3	
	MAC135865	O-RING – Ø1.78 X Ø9.25		
9	MAC136150	FITTING – ELBOW 90° BLKHD HYD [135]	1	
	MAC135865	O-RING – Ø1.78 X Ø9.25		
10	MAC135778	FITTING – ADAPTER	5	
	MAC50219	O-RING – Ø1.98 X Ø11.89		
	MAC135865	O-RING – Ø1.78 X Ø9.25		
11	MAC283791	CLAMP – ASSY [136]	1	
12	MAC255461	PLATE – COVER	1	
13	MAC232395	CLAMP – ASSY [136]	1	
14	MAC184303	CLAMP – COVER PLATE	1	
15	MAC283797	CLAMP – LINE BOTTOM LH	1	
16	MAC283807	CLAMP – LINE MIDDLE LH	1	
17	MAC340548	KIT – LH TOP LINE CLAMP [137]	1	
18	MAC312654	STUD – THRD CLAMP PATCH WING	2	
19	MAC30753	FASTENER – CABLE TIE, BLACK	1	
20	MAC283247	LINE – HYDRAULIC (D225)	1	
21	MAC283060	HOSE – HYD	1	
22	MAC135443	CINCH STRAP – 4 IN. LG	1	
A	MAC136540	WASHER – FLAT		
B	MAC184644	BOLT – RHSN M6 X 1 X 50-8.8-ZINC		

135. The fitting includes a securing nut (NSS).
136. The clamp assembly includes two clamp halves (NSS). It does NOT include the cover plate or hardware.
137. Includes LH top line clamp (NSS) and two Torx screws (MAC320336).

HYDRAULICS – LIFT AND FORE-AFT, SINGLE REEL, LEFT ARM (D225)

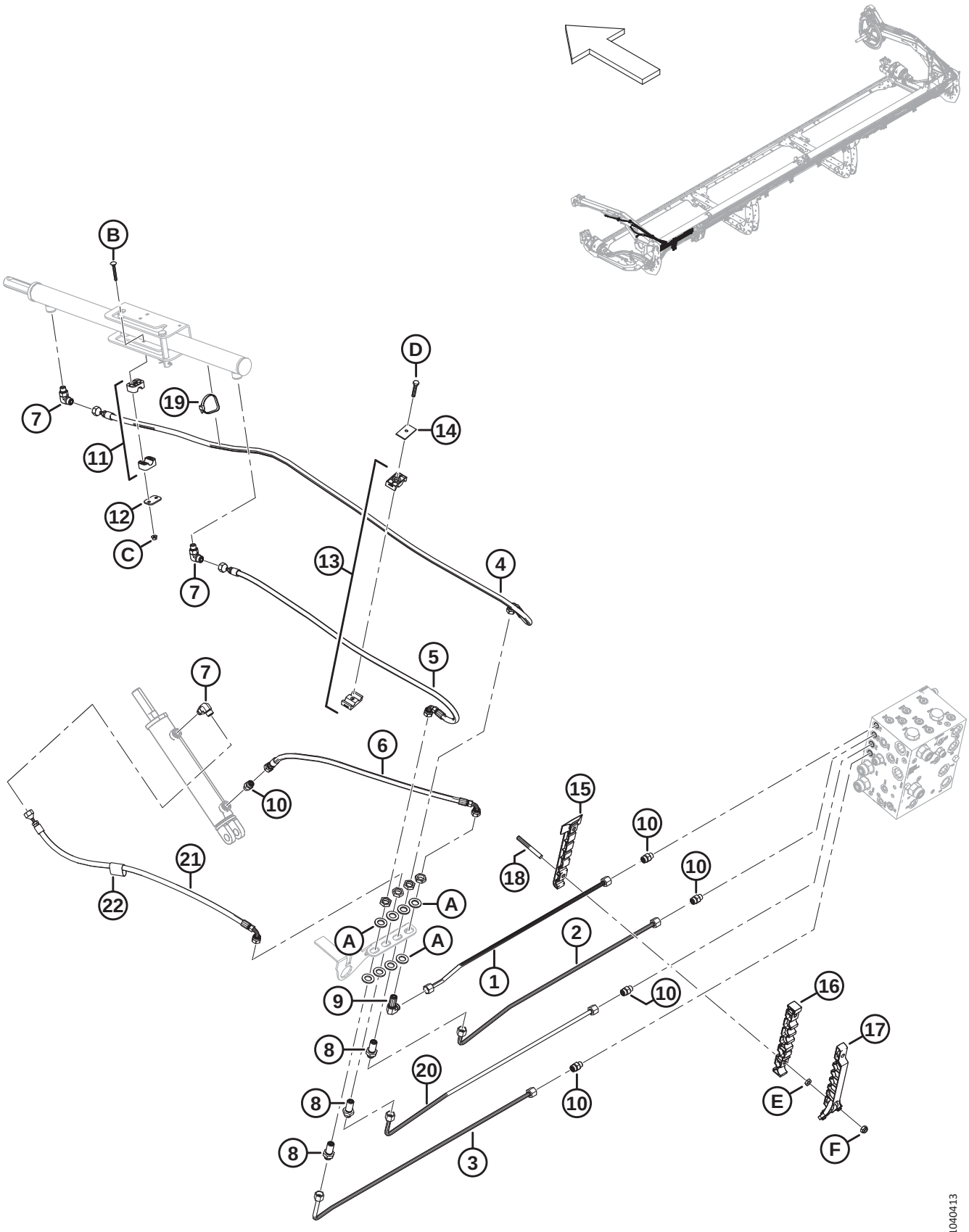

Ref	Part Number	Description	Qty	Serial Number
C	MAC152668	NUT – HEX FLG CTR LOC M6 X 1-8		
D	MAC30660	BOLT – HEX HD M8 X 1.25 X 45-8.8-AA1J		
E	MAC136442	NUT – HEX THIN M10 X 1.5-05-AA1J		
F	MAC184692	NUT – HEX NYLOC M10 X 1.5-8-AA1J		

63 Hydraulics – Lift and Fore-Aft, Single Reel, Right Arm (D225)

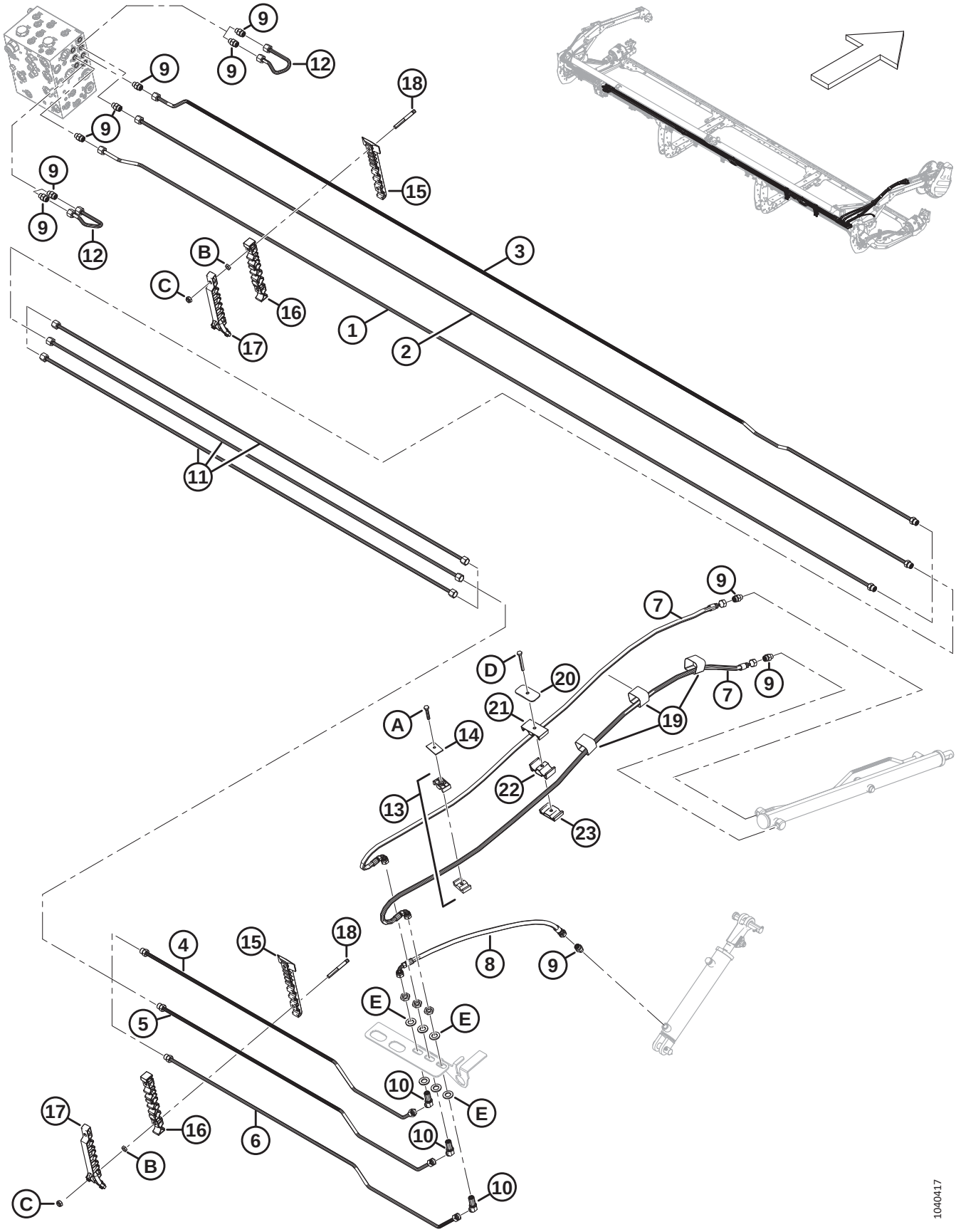

Ref	Part Number	Description	Qty	Serial Number
1	MAC283260	LINE – HYDRAULIC (D225)	1	
	MAC135865	O-RING – Ø1.78 X Ø9.25		
2	MAC283262	LINE – HYDRAULIC (D225)	1	
	MAC135865	O-RING – Ø1.78 X Ø9.25		
3	MAC283258	LINE – HYDRAULIC (D225)	1	
	MAC135865	O-RING – Ø1.78 X Ø9.25		
4	MAC283259	LINE – HYDRAULIC (D225)	1	
	MAC135865	O-RING – Ø1.78 X Ø9.25		
5	MAC283261	LINE – HYDRAULIC (D225)	1	
	MAC135865	O-RING – Ø1.78 X Ø9.25		
6	MAC283263	LINE – HYDRAULIC (D225)	1	
	MAC135865	O-RING – Ø1.78 X Ø9.25		
7	MAC283327	HOSE – HYD	2	
8	MAC283059	HOSE – HYD	1	
9	MAC135778	FITTING – ADAPTER	10	
	MAC50219	O-RING – Ø1.98 X Ø11.89		
	MAC135865	O-RING – Ø1.78 X Ø9.25		
10	MAC136146	FITTING – ELBOW 45° BLKHD HYD [138]	3	
11	MAC283750	LINE – HYDRAULIC (D225)	3	
	MAC135865	O-RING – Ø1.78 X Ø9.25		
12	MAC283251	LINE – HYDRAULIC	2	
13	MAC232395	CLAMP – ASSY [139]	1	
14	MAC184303	CLAMP – COVER PLATE	1	
15	MAC283820	CLAMP – LINE BOTTOM RH	7	
16	MAC283818	CLAMP – LINE MIDDLE RH	7	
17	MAC340549	KIT – RH TOP LINE CLAMP [140]	7	
18	MAC312654	STUD – THRD CLAMP PATCH WING	14	
19	MAC135444	CINCH STRAP – 4 IN. LG	3	
20	MAC323023	PLATE – CLAMP CENTER REEL ARM	1	

138. The fitting includes a securing nut (NSS).
139. The clamp assembly includes two clamp halves (NSS). It does NOT include the cover plate or hardware.
140. Includes RH top line clamp (NSS) and two Torx screws (MAC320336).

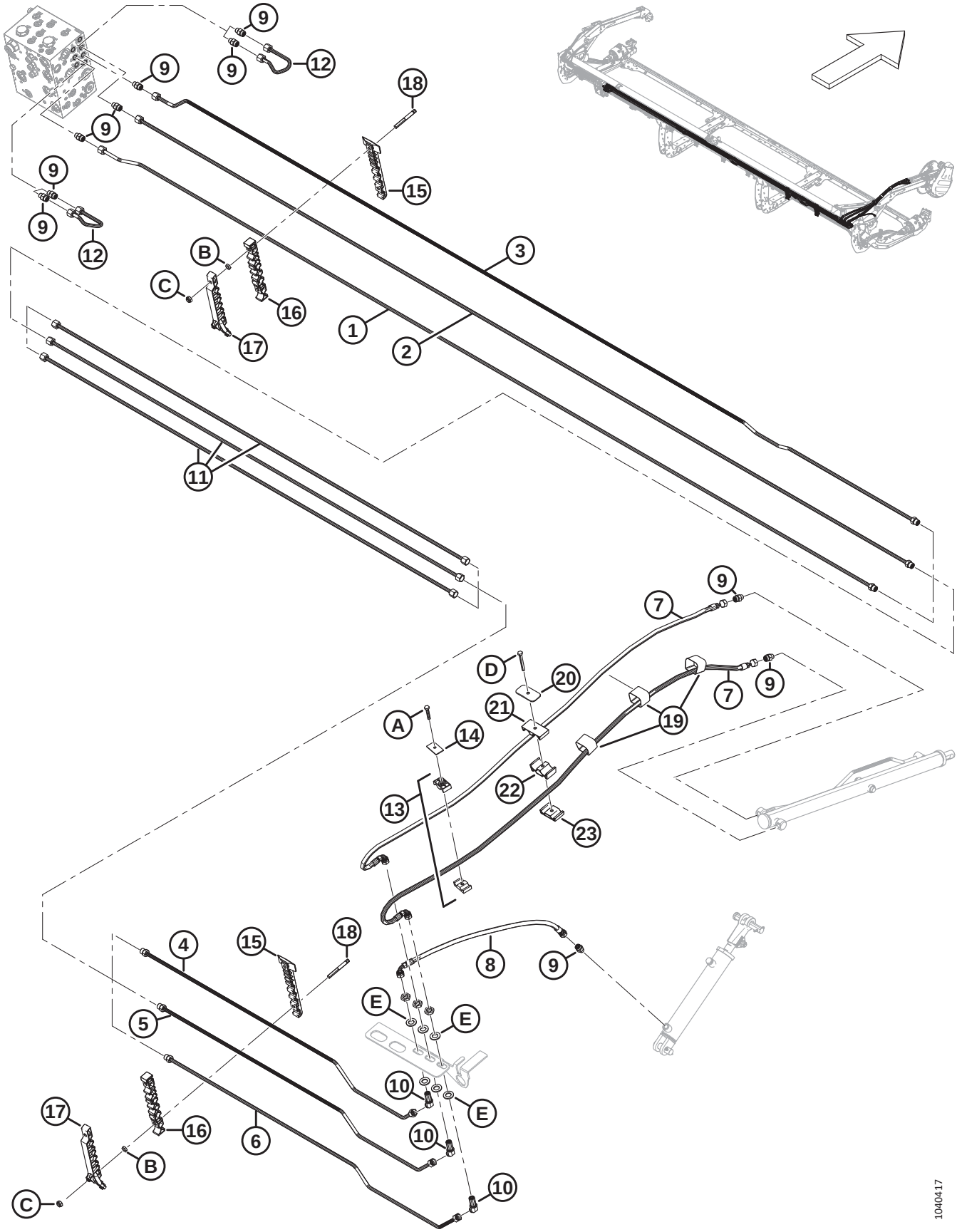
1040417

Ref	Part Number	Description	Qty	Serial Number
21	MAC283989	PLATE – HOSE REEL TOP	1	
22	MAC283988	PLATE – HOSE REEL MIDDLE	1	
23	MAC283987	PLATE – HOSE REEL BOTTOM	1	
A	MAC30660	BOLT – HEX HD M8 X 1.25 X 45-8.8-AA1J		
B	MAC136442	NUT – HEX THIN M10 X 1.5-05-AA1J		
C	MAC184692	NUT – HEX NYLOC M10 X 1.5-8-AA1J		
D	MAC184656	BOLT – HEX HD M8 X 1.25 X 70-8.8-AA1J		
E	MAC136540	WASHER – FLAT		

64 Hydraulics – Lift and Fore-Aft, Double Reel, Left Arm (D230, D235, and D241)

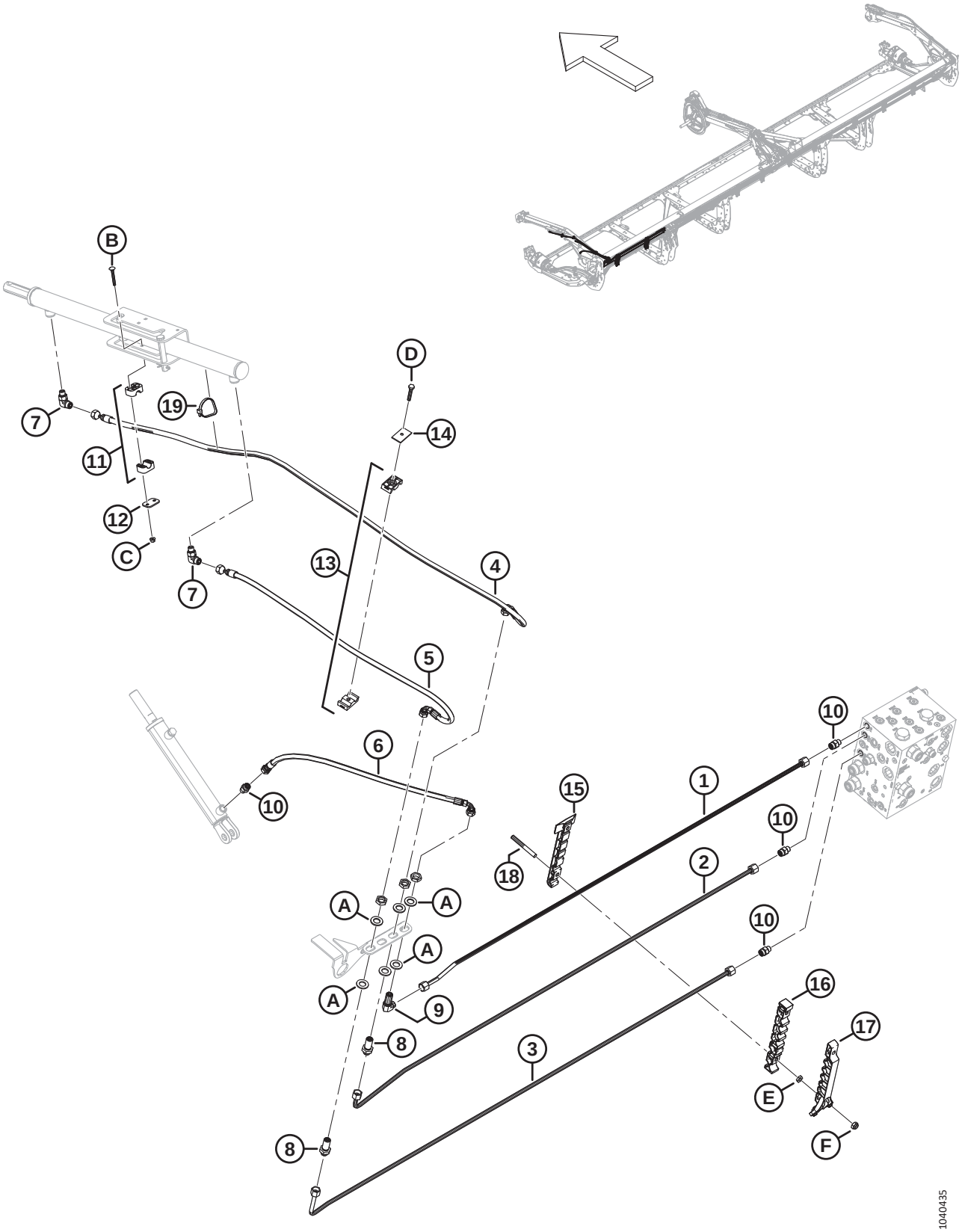

Ref	Part Number	Description	Qty	Serial Number
1	MAC283056	LINE – HYDRAULIC (D230) [141]	1	
	MAC283144	LINE – HYDRAULIC (D235) [142]	1	
	MAC283183	LINE – HYDRAULIC (D241) [143]	1	
2	MAC283055	LINE – HYDRAULIC (D230)[141]	1	
	MAC283143	LINE – HYDRAULIC (D235)[142]	1	
	MAC283182	LINE – HYDRAULIC (D241) [143]	1	
3	MAC283053	LINE – HYDRAULIC (D230) [141]	1	
	MAC283141	LINE – HYDRAULIC (D235) [142]	1	
	MAC283180	LINE – HYDRAULIC (D241) [143]	1	
4	MAC283057	HOSE – HYD	1	
5	MAC283058	HOSE – HYD	1	
6	MAC283059	HOSE – HYD	1	
7	MAC136095	FITTING – ELBOW 90° HYD	2	
8	MAC136145	FITTING – BULKHEAD UNION HYD [144]	2	
9	MAC136150	FITTING – ELBOW 90° BLKHD HYD [144]	1	
10	MAC135778	FITTING – ADAPTER	4	
	MAC50219	O-RING – Ø1.98 X Ø11.89		
	MAC135865	O-RING – Ø1.78 X Ø9.25		
11	MAC283791	CLAMP – ASSY [145]	1	
12	MAC255461	PLATE – COVER	1	
13	MAC232395	CLAMP – ASSY [145]	1	
14	MAC184303	CLAMP – COVER PLATE	1	
15	MAC283797	CLAMP – LINE BOTTOM LH [146]		
16	MAC283807	CLAMP – LINE MIDDLE LH [146]		
17	MAC340548	KIT – LH TOP LINE CLAMP [147]		
18	MAC312654	STUD – THRD CLAMP PATCH WING [148]		

141. Used on D230 headers only.
142. Used on D235 headers only.
143. Used on D241 headers only.
144. The fitting includes a securing nut (NSS).
145. The clamp assembly includes two clamp halves (NSS). It does NOT include the cover plate or hardware.
146. Quantities: D230 = 2, D235 = 3, and D241 = 4.
147. Includes LH top line clamp (NSS) and two Torx screws (MAC320336). Quantities: D230 = 2, D235 = 3, and D241 = 4.
148. Quantities: D230 = 4, D235 = 6, and D241 = 8.

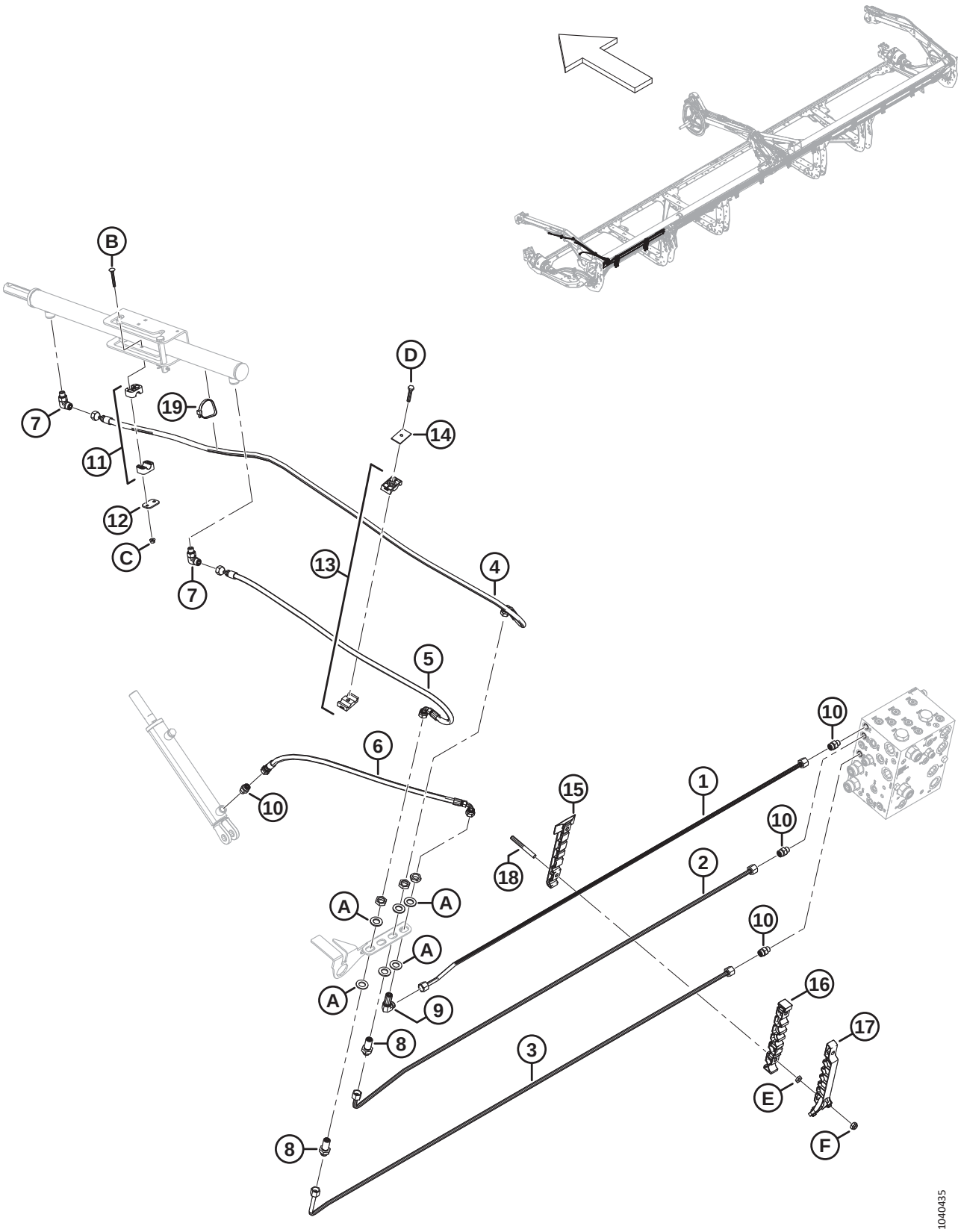
B
D
7
19
14
11
12
C
7
13
4
5
6
10
10
15
1
10
18
2
10
A
A
A
A
9
8
16
17
3
E
8
F
1040435

Ref	Part Number	Description	Qty	Serial Number
19	MAC30753	FASTENER – CABLE TIE, BLACK	1	
A	MAC136540	WASHER – FLAT		
B	MAC184644	BOLT – RHSN M6 X 1 X 50-8.8-ZINC		
C	MAC152668	NUT – HEX FLG CTR LOC M6 X 1-8		
D	MAC30660	BOLT – HEX HD M8 X 1.25 X 45-8.8-AA1J		
E	MAC136442	NUT – HEX THIN M10 X 1.5-05-AA1J		
F	MAC184692	NUT – HEX NYLOC M10 X 1.5-8-AA1J		

65 Hydraulics – Lift and Fore-Aft, Double Reel, Left Arm (D245)

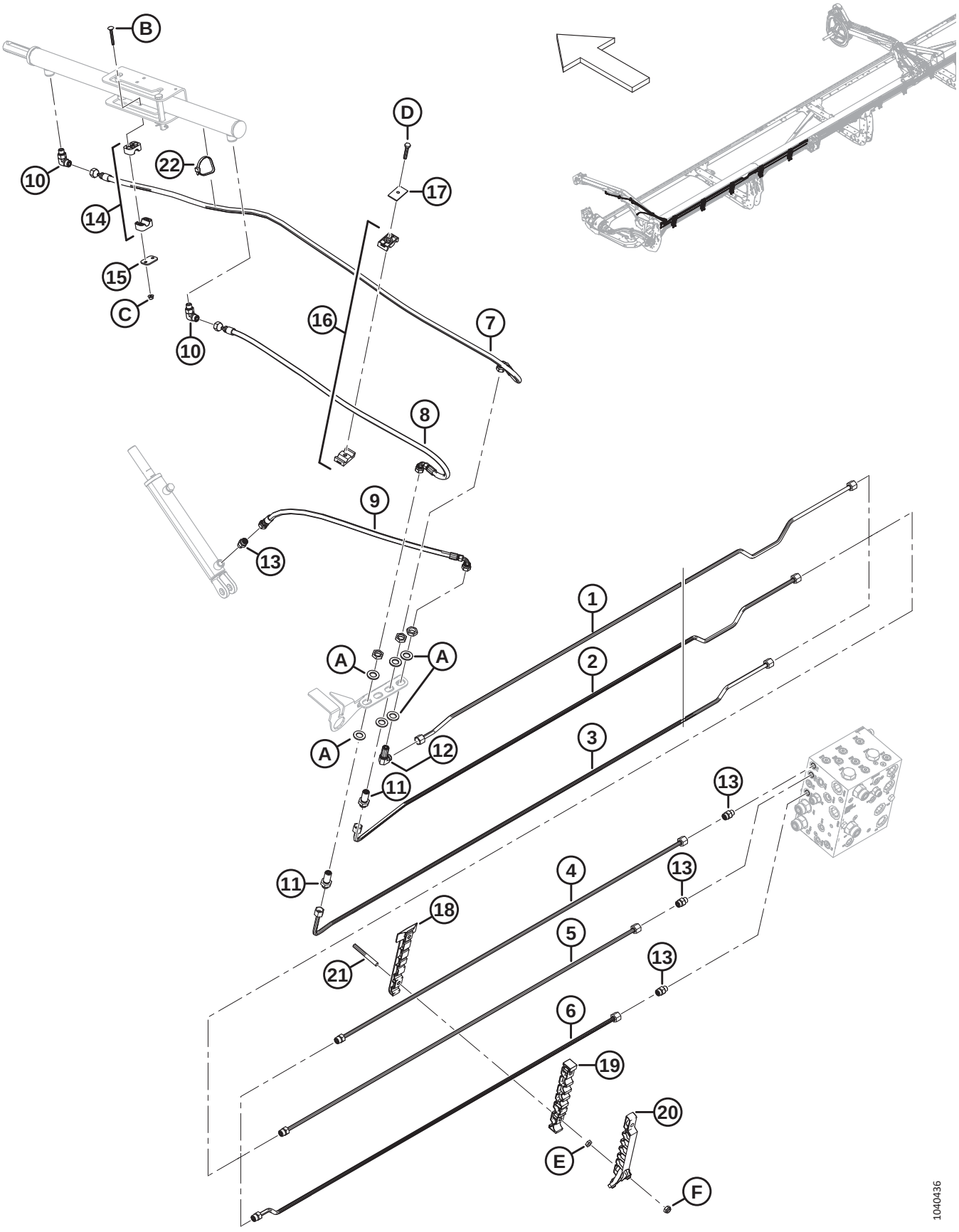

HYDRAULICS – LIFT AND FORE-AFT, DOUBLE REEL, LEFT ARM (D245)

Ref	Part Number	Description	Qty	Serial Number
1	MAC283824	LINE – HYDRAULIC (D245)	1	
2	MAC283823	LINE – HYDRAULIC (D245)	1	
3	MAC283822	LINE – HYDRAULIC (D245)	1	
4	MAC283450	LINE – HYDRAULIC (D245)	1	
	MAC135865	O-RING – Ø1.78 X Ø9.25		
5	MAC283449	LINE – HYDRAULIC (D245)	1	
	MAC135865	O-RING – Ø1.78 X Ø9.25		
6	MAC283447	LINE – HYDRAULIC (D245)	1	
	MAC135865	O-RING – Ø1.78 X Ø9.25		
7	MAC283057	HOSE – HYD	1	
8	MAC283058	HOSE – HYD	1	
9	MAC283059	HOSE – HYD	1	
10	MAC136095	FITTING – ELBOW 90° HYD	2	
11	MAC136145	FITTING – BULKHEAD UNION HYD [149]	2	
12	MAC136150	FITTING – ELBOW 90° BLKHD HYD [149]	1	
13	MAC135778	FITTING – ADAPTER	4	
14	MAC283791	CLAMP – ASSY [150]	1	
15	MAC255461	PLATE – COVER	1	
16	MAC232395	CLAMP – ASSY [150]	1	
17	MAC184303	CLAMP – COVER PLATE	1	
18	MAC283797	CLAMP – LINE BOTTOM LH	5	
19	MAC283807	CLAMP – LINE MIDDLE LH	5	
20	MAC340548	KIT – LH TOP LINE CLAMP [151]	5	
21	MAC312654	STUD – THRD CLAMP PATCH WING	10	
22	MAC30753	FASTENER – CABLE TIE, BLACK	1	
A	MAC136540	WASHER – FLAT		
B	MAC184644	BOLT – RHSN M6 X 1 X 50-8.8-ZINC		
C	MAC152668	NUT – HEX FLG CTR LOC M6 X 1-8		

149. The fitting includes a securing nut (NSS).
150. The clamp assembly includes two clamp halves (NSS). It does NOT include the cover plate or hardware.
151. Includes LH top line clamp (NSS) and two Torx screws (MAC320336).

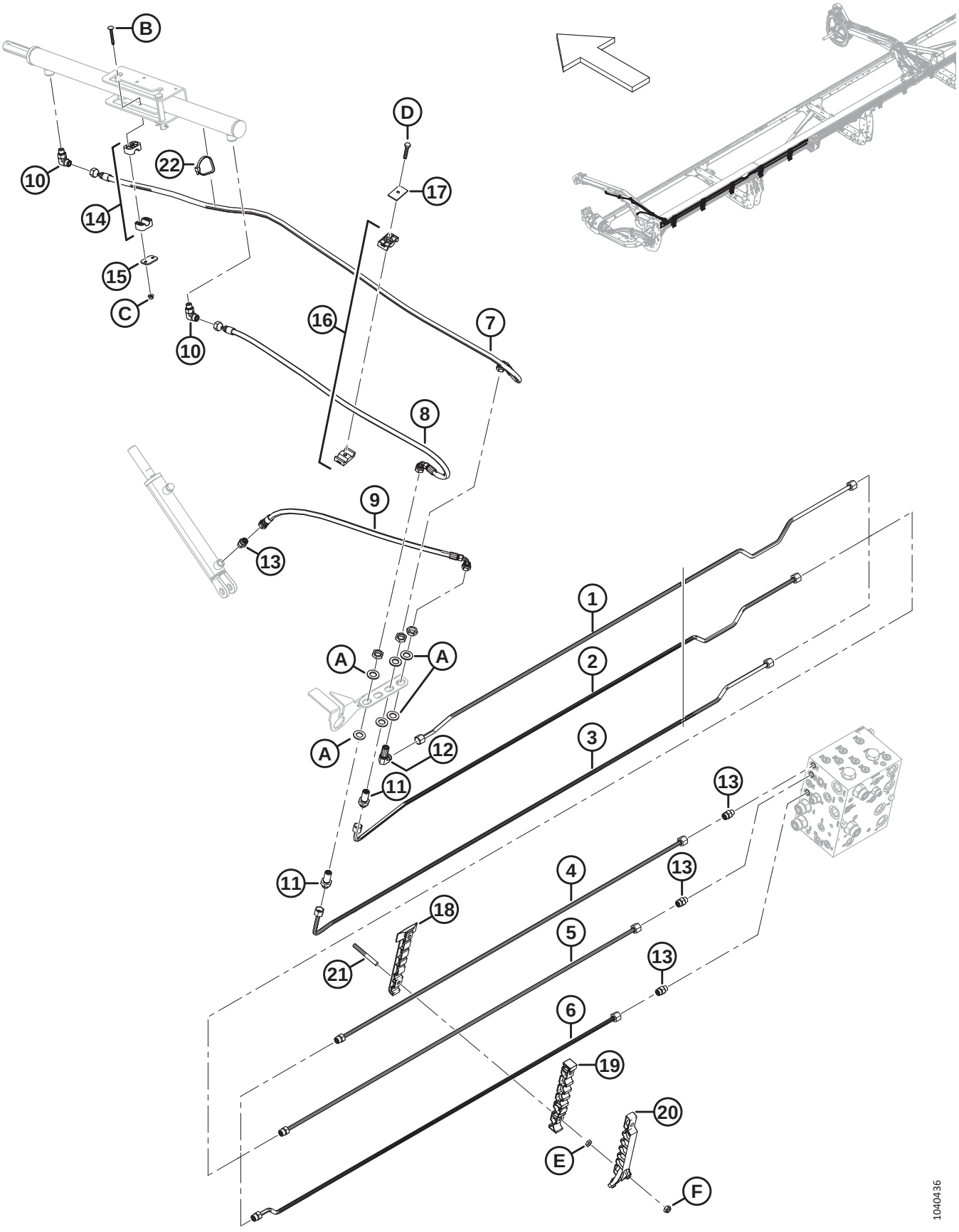
B
D
22
17
10
14
15
C
16
7
10
8
9
13
1
2
A
A
A
12
3
11
13
11
4
13
18
5
21
13
6
19
20
E
F
1040436

Ref	Part Number	Description	Qty	Serial Number
D	MAC30660	BOLT – HEX HD M8 X 1.25 X 45-8.8-AA1J		
E	MAC136442	NUT – HEX THIN M10 X 1.5-05-AA1J		
F	MAC184692	NUT – HEX NYLOC M10 X 1.5-8-AA1J		

66 Hydraulics – Lift and Fore-Aft, Double Reel, Center Arm (D230, D235, D241, and D245)

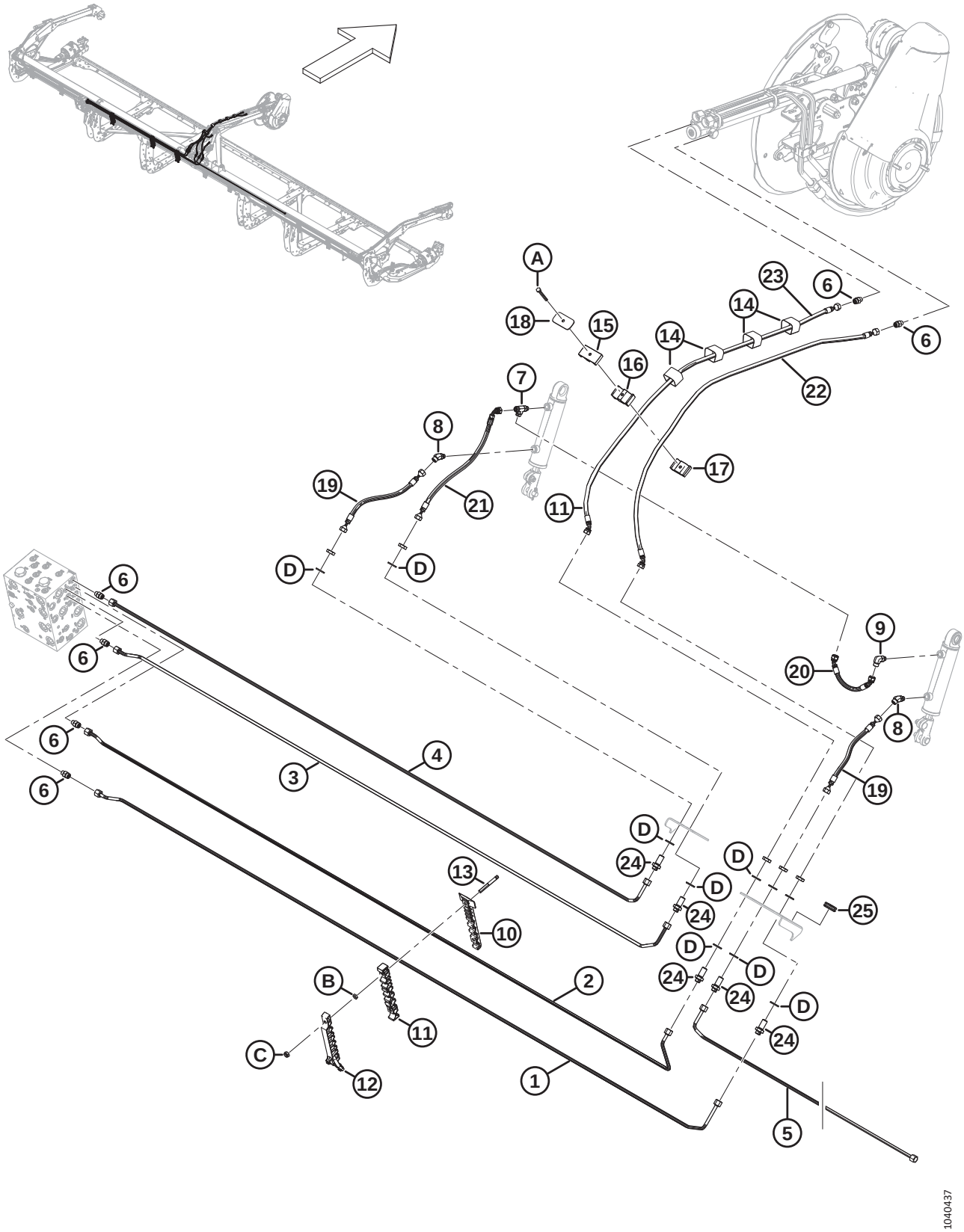

Ref	Part Number	Description	Qty	Serial Number
1	MAC283523	LINE – HYDRAULIC	1	
2	MAC283520	LINE – HYDRAULIC	1	
3	MAC283522	LINE – HYDRAULIC	1	
4	MAC283521	LINE – HYDRAULIC	1	
5	MAC283526	LINE – HYDRAULIC (D230, D235) [152]	1	
	MAC283810	LINE – HYDRAULIC (D241, D245) [153]	1	
6	MAC135778	FITTING – ADAPTER	6	
	MAC50219	O-RING – Ø1.98 X Ø11.89		
	MAC135865	O-RING – Ø1.78 X Ø9.25		
7	MAC136240	FITTING – TEE HYD	1	
	MAC50219	O-RING – Ø1.98 X Ø11.89		
	MAC135865	O-RING – Ø1.78 X Ø9.25		
8	MAC136144	FITTING – ELBOW 45° HYD	2	
	MAC50219	O-RING – Ø1.98 X Ø11.89		
	MAC135865	O-RING – Ø1.78 X Ø9.25		
9	MAC136095	FITTING – ELBOW 90° HYD	1	
	MAC50219	O-RING – Ø1.98 X Ø11.89		
	MAC135865	O-RING – Ø1.78 X Ø9.25		
10	MAC283820	CLAMP – LINE BOTTOM RH	3	
11	MAC283818	CLAMP – LINE MIDDLE RH	3	
12	MAC340549	KIT – RH TOP LINE CLAMP [154]	3	
13	MAC312654	STUD – THRD CLAMP PATCH WING	6	
14	MAC135444	CINCH STRAP – 6 IN. LG	4	
15	MAC283989	CLAMP – HOSE REEL TOP	1	
16	MAC283988	CLAMP – HOSE REEL MIDDLE	1	
17	MAC283987	CLAMP – HOSE REEL BOTTOM	1	
18	MAC323023	PLATE – CLAMP CENTER REEL ARM	1	
19	MAC283582	HOSE – HYD, 1/4 IN ID, 350 MM LG, 100R17	2	
20	MAC283785	HOSE – HYD, 1/4 IN ID, 240 MM LG, 100R17	1	

152. Used on D230 and D235 headers only.
153. Used on D241 and D245 headers only.
154. Includes RH top line clamp (NSS) and two Torx screws (MAC320336).

HYDRAULICS – LIFT AND FORE-AFT, DOUBLE REEL, CENTER ARM (D230, D235, D241, AND D245)

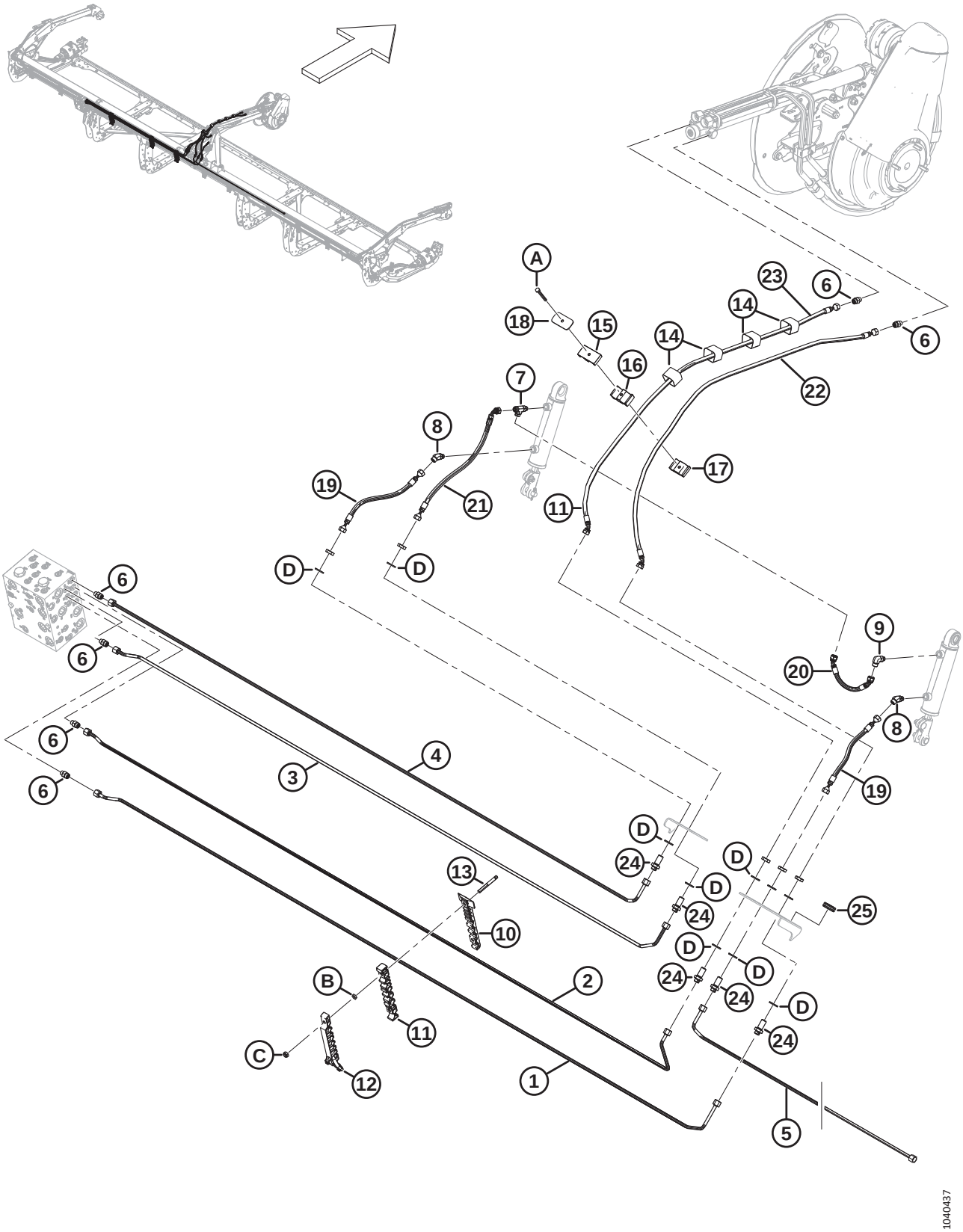

Ref	Part Number	Description	Qty	Serial Number
21	MAC283747	HOSE – HYD, 1/4 IN ID, 475 MM LG, 100R17	1	
22	MAC323018	HOSE – HYD, 1/4 IN ID, 1530 MM LG, 100R17	1	
23	MAC283581	HOSE – HYD, 1/4 IN ID, 1505 MM LG, 100R17	1	
24	MAC136145	FITTING – BULKHEAD UNION HYD [155]	5	
	MAC135865	O-RING – Ø1.78 X Ø9.25		
25	MAC112640	GROMMET	1	
A	MAC184656	BOLT – HEX HD M8 X 1.25 X 70-8.8-AA1J		
B	MAC136442	NUT – HEX THIN M10 X 1.5-05-AA1J		
C	MAC184692	NUT – HEX NYLOC M10 X 1.5-8-AA1J		
D	MAC136540	WASHER – FLAT		

155. The fitting includes a securing nut (NSS).

67 Hydraulics – Lift and Fore-Aft, Double Reel, Right Arm (D230 and D235)

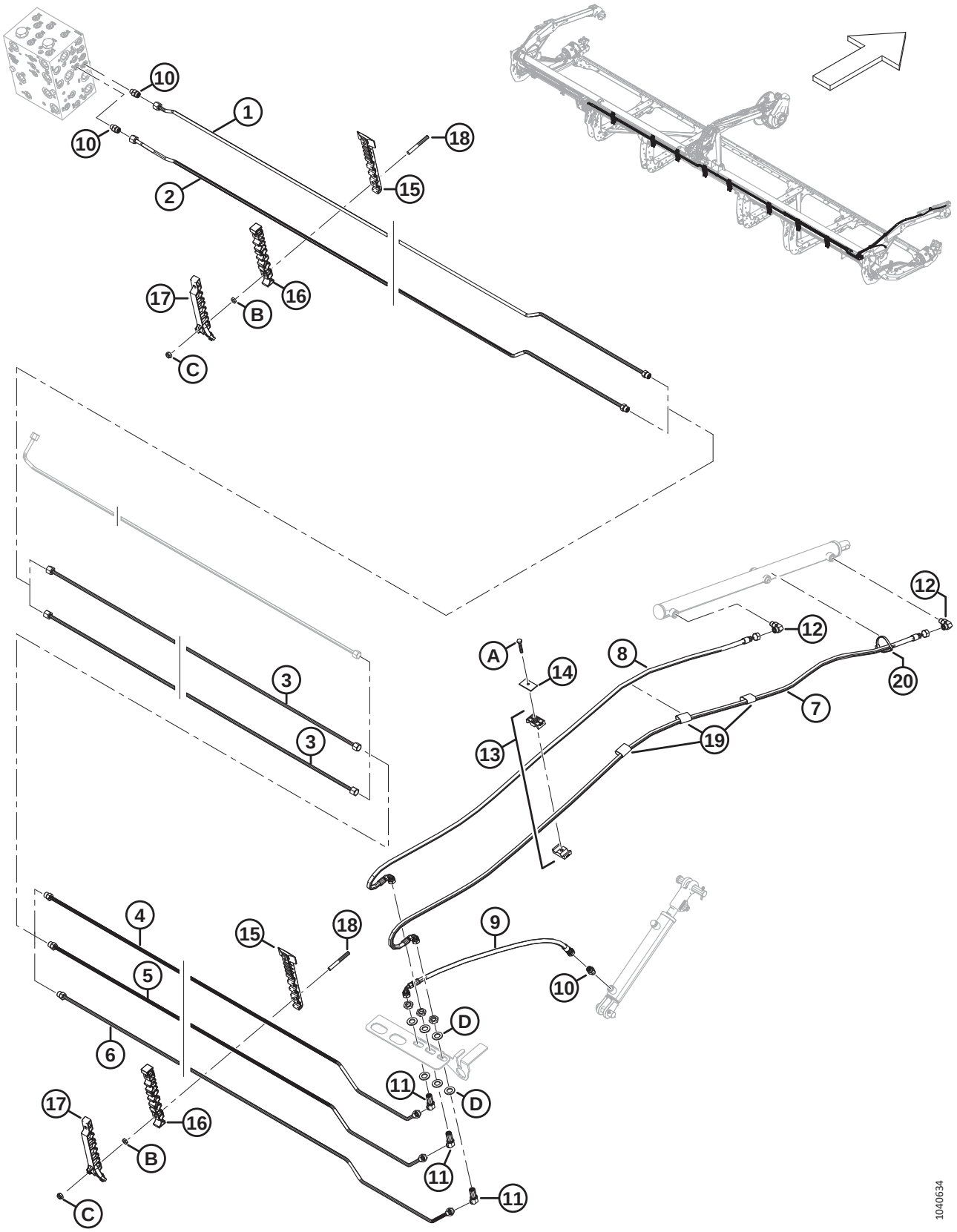

Ref	Part Number	Description	Qty	Serial Number
1	MAC283533	LINE – HYDRAULIC (D230 AND D235)	1	
	MAC135865	O-RING – Ø1.78 X Ø9.25		
2	MAC283540	LINE – HYDRAULIC (D230 AND D235)	1	
	MAC135865	O-RING – Ø1.78 X Ø9.25		
3	MAC283750	LINE – HYDRAULIC (D230 AND D235)	2	
4	MAC283527	LINE – HYDRAULIC (D230) [156]	1	
	MAC283528	LINE – HYDRAULIC (D235) [157]	1	
	MAC135865	O-RING – Ø1.78 X Ø9.25		
5	MAC283534	LINE – HYDRAULIC (D230) [156]	1	
	MAC283535	LINE – HYDRAULIC (D235) [157]	1	
	MAC135865	O-RING – Ø1.78 X Ø9.25		
6	MAC283541	LINE – HYDRAULIC (D230) [156]	1	
	MAC283542	LINE – HYDRAULIC (D235) [157]	1	
	MAC135865	O-RING – Ø1.78 X Ø9.25		
7	MAC283074	HOSE – HYD	1	
8	MAC283075	HOSE – HYD	1	
9	MAC283059	HOSE – HYD	1	
10	MAC135778	FITTING – ADAPTER	3	
	MAC50219	O-RING – Ø1.98 X Ø11.89		
	MAC135865	O-RING – Ø1.78 X Ø9.25		
11	MAC136146	FITTING – ELBOW 45° BLKHD HYD [158]	3	
12	MAC136095	FITTING – ELBOW 90° HYD	2	
	MAC50219	O-RING – Ø1.98 X Ø11.89		
	MAC135865	O-RING – Ø1.78 X Ø9.25		
13	MAC232395	CLAMP – ASSY [159]	2	
14	MAC184303	CLAMP – COVER PLATE	2	
15	MAC283820	CLAMP – LINE BOTTOM RH [160]		

156. Used on D230 headers only.
157. Used on D235 headers only.
158. The fitting includes a securing nut (NSS).
159. The clamp assembly includes two clamp halves (NSS). It does NOT include the cover plate or hardware.
160. Quantities: D230 = 8; D235 = 9.

HYDRAULICS – LIFT AND FORE-AFT, DOUBLE REEL, RIGHT ARM (D230 AND D235)

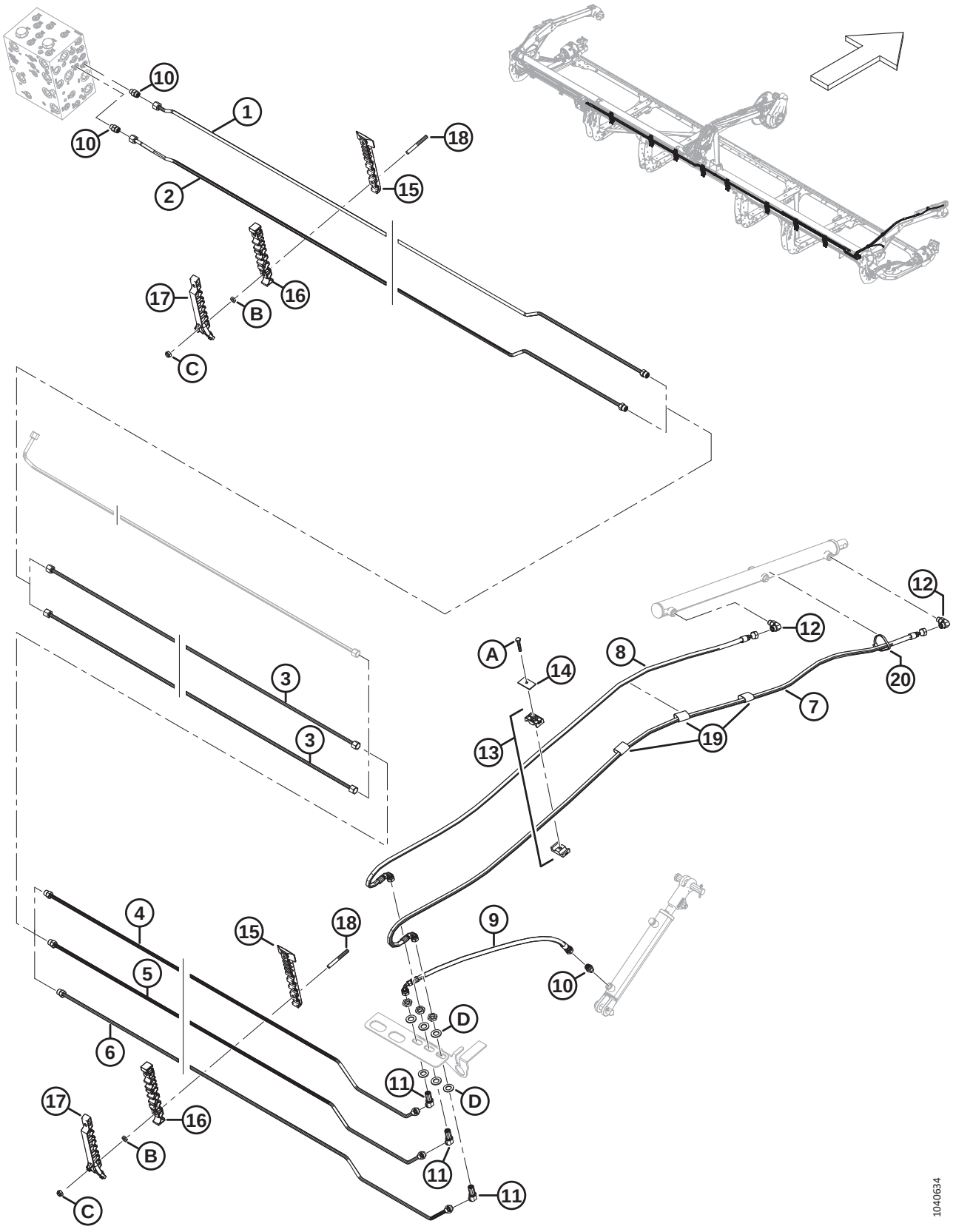

Ref	Part Number	Description	Qty	Serial Number
16	MAC283818	CLAMP – LINE MIDDLE RH [160]		
17	MAC340549	KIT – RH TOP LINE CLAMP [161]		
18	MAC312654	STUD – THRD CLAMP PATCH WING [162]		
19	MAC135443	CINCH STRAP – 4 IN. LG	3	
20	MAC30753	FASTENER – CABLE TIE, BLACK	1	
A	MAC30660	BOLT – HEX HD M8 X 1.25 X 45-8.8-AA1J		
B	MAC136442	NUT – HEX THIN M10 X 1.5-05-AA1J		
C	MAC184692	NUT – HEX NYLOC M10 X 1.5-8-AA1J		
D	MAC136540	WASHER – FLAT		

161. Includes RH top line clamp (NSS) and two Torx screws (MAC320336). Quantities: D230 = 8; D235 = 9.
162. Quantities: D230 = 16; D235 = 18.

68 Hydraulics – Lift and Fore-Aft, Double Reel, Right Arm (D241 and D245)

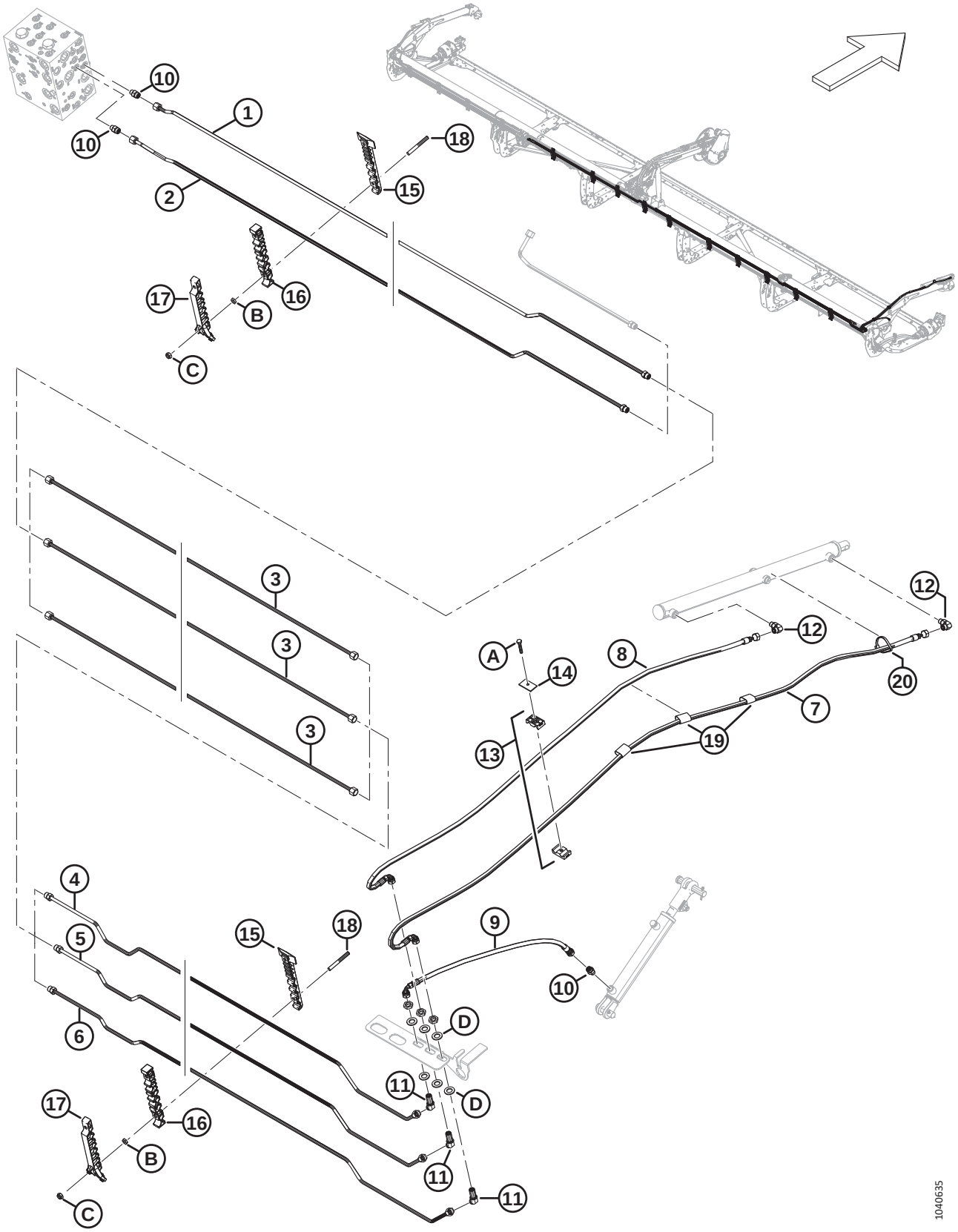

Ref	Part Number	Description	Qty	Serial Number
1	MAC283533	LINE – HYDRAULIC (D241 AND D245)	1	
	MAC135865	O-RING – Ø1.78 X Ø9.25		
2	MAC283540	LINE – HYDRAULIC (D241 AND D245)	1	
	MAC135865	O-RING – Ø1.78 X Ø9.25		
3	MAC283529	LINE – HYDRAULIC (D241) [163]	3	
	MAC283531	LINE – HYDRAULIC (D245) [164]	3	
4	MAC283431	LINE – HYDRAULIC (D241 AND D245)	1	
	MAC135865	O-RING – Ø1.78 X Ø9.25		
5	MAC283432	LINE – HYDRAULIC (D241 AND D245)	1	
	MAC135865	O-RING – Ø1.78 X Ø9.25		
6	MAC283433	LINE – HYDRAULIC (D241 AND D245)	1	
	MAC135865	O-RING – Ø1.78 X Ø9.25		
7	MAC283074	HOSE – HYD	1	
8	MAC283075	HOSE – HYD	1	
9	MAC283059	HOSE – HYD	1	
10	MAC135778	FITTING – ADAPTER	3	
	MAC50219	O-RING – Ø1.98 X Ø11.89		
	MAC135865	O-RING – Ø1.78 X Ø9.25		
11	MAC136146	FITTING – ELBOW 45° BLKHD HYD [165]	3	
12	MAC136095	FITTING – ELBOW 90° HYD	2	
	MAC50219	O-RING – Ø1.98 X Ø11.89		
	MAC135865	O-RING – Ø1.78 X Ø9.25		
13	MAC232395	CLAMP – ASSY [166]	2	
14	MAC184303	CLAMP – COVER PLATE	2	
15	MAC283820	CLAMP – LINE BOTTOM RH	10	
16	MAC283818	CLAMP – LINE MIDDLE RH	10	
17	MAC340549	KIT – RH TOP LINE CLAMP [167]	10	
18	MAC312654	STUD – THRD CLAMP PATCH WING	20	

163. Used on D241 headers only.
164. Used on D245 headers only.
165. The fitting includes a securing nut (NSS).
166. The clamp assembly includes two clamp halves (NSS). It does NOT include the cover plate or hardware.
167. Includes RH top line clamp (NSS) and two Torx screws (MAC320336).

HYDRAULICS – LIFT AND FORE-AFT, DOUBLE REEL, RIGHT ARM (D241 AND D245)

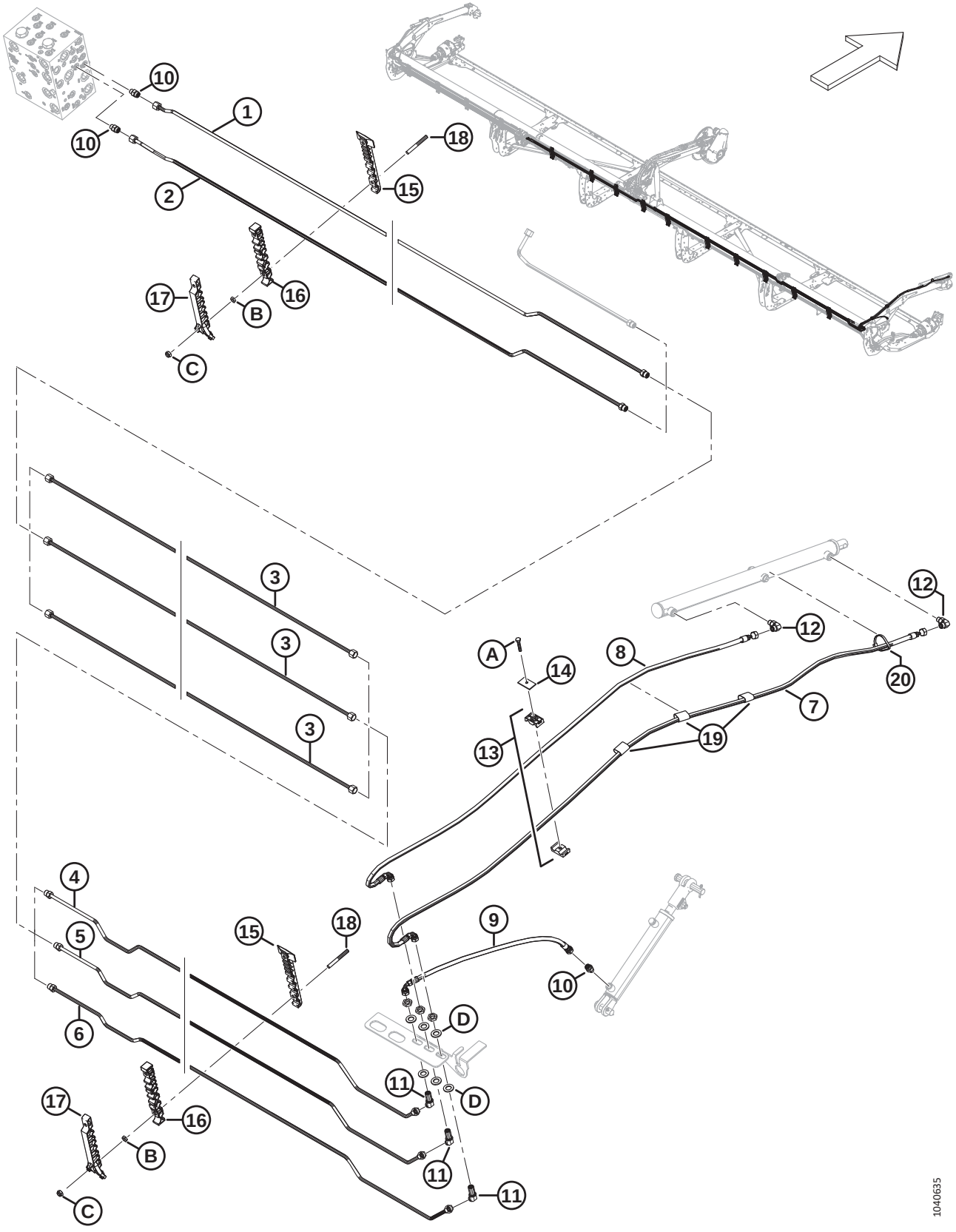

Ref	Part Number	Description	Qty	Serial Number
19	MAC135443	CINCH STRAP – 4 IN. LG	3	
20	MAC30753	FASTENER – CABLE TIE, BLACK	1	
A	MAC30660	BOLT – HEX HD M8 X 1.25 X 45-8.8-AA1J		
B	MAC136442	NUT – HEX THIN M10 X 1.5-05-AA1J		
C	MAC184692	NUT – HEX NYLOC M10 X 1.5-8-AA1J		
D	MAC136540	WASHER – FLAT		

69 Hydraulics – Reel Drive, Single Reel

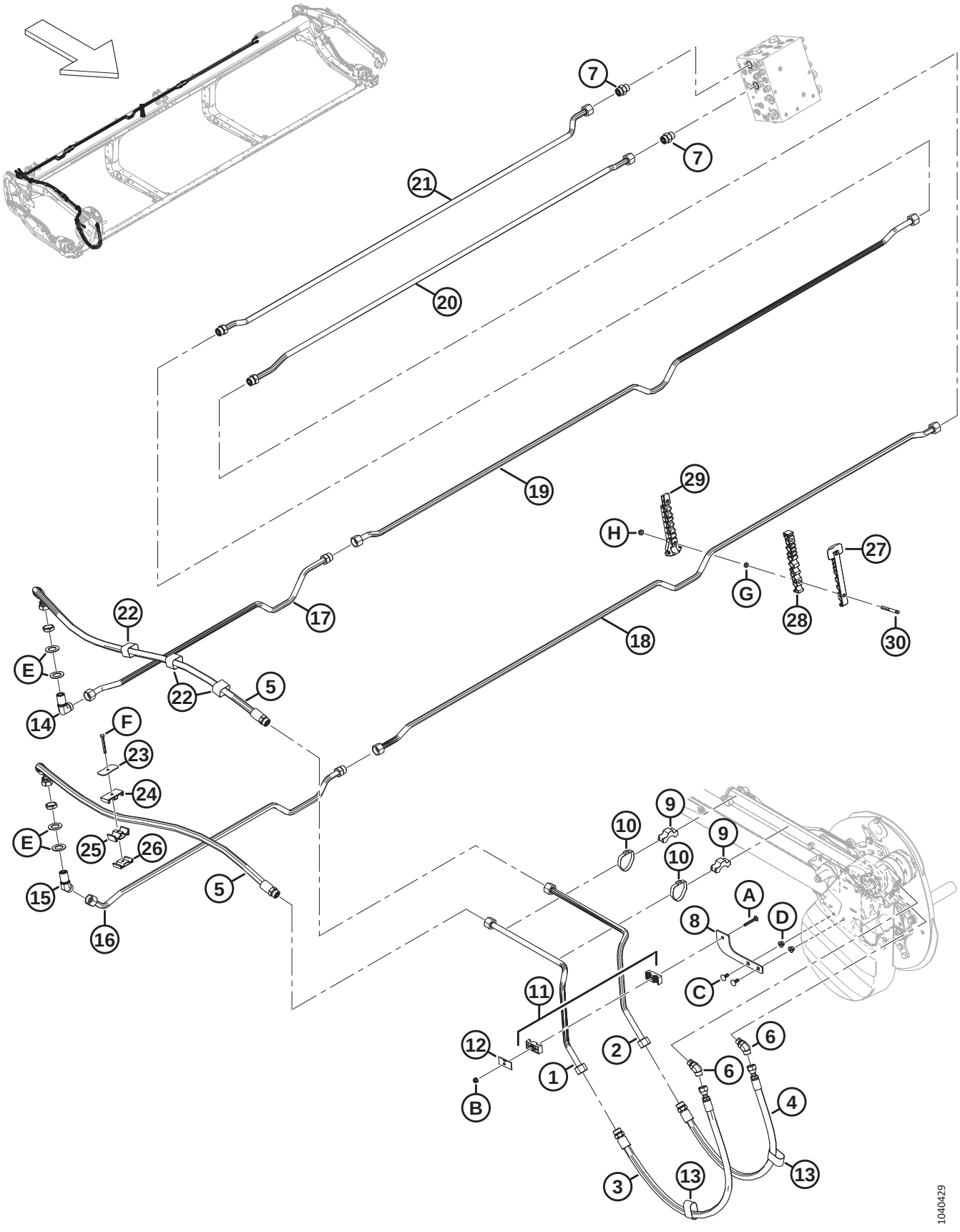

Ref	Part Number	Description	Qty	Serial Number
1	MAC323428	LINE – HYDRAULIC	1	
2	MAC323429	LINE – HYDRAULIC	1	
3	MAC283092	HOSE – HYD	1	
	MAC135868	O-RING – Ø1.78 X Ø18.77		
4	MAC283091	HOSE – HYD	1	
	MAC135868	O-RING – Ø1.78 X Ø18.77		
5	MAC323519	HOSE – HYD	2	
	MAC135868	O-RING – Ø1.78 X Ø18.77		
6	MAC136327	FITTING – ELBOW 45° HYD	2	
	MAC44210	O-RING – Ø2.46 X Ø19.18		
	MAC135867	O-RING – Ø1.78 X Ø15.60		
7	MAC135788	FITTING – ADAPTER	2	
	MAC30971	O-RING – Ø2.95 X Ø23.47		
	MAC135868	O-RING – Ø1.78 X Ø18.77		
8	MAC273285	SUPPORT – BRACKET	1	
9	MAC232405	CLAMP – LINE	2	
10	MAC112823	CLAMP – HOSE	2	
11	MAC232397	CLAMP – ASSY [168]	1	
12	MAC232233	CLAMP – COVER PLATE	1	
13	MAC135443	CINCH STRAP 4 IN. LG	2	
14	MAC136245	FITTING – ELBOW 90°BULKHEAD HYD [169]	1	
	MAC135868	O-RING – Ø1.78 X Ø18.77		
15	MAC136527	FITTING – ELBOW 45° BULKHEAD [169]	1	
	MAC135868	O-RING – Ø1.78 X Ø18.77		
16	MAC283255	LINE – HYDRAULIC	1	
	MAC135868	O-RING – Ø1.78 X Ø18.77		
17	MAC283254	LINE – HYDRAULIC	1	
	MAC135868	O-RING – Ø1.78 X Ø18.77		
18	MAC283256	LINE – HYDRAULIC	1	
19	MAC283253	LINE – HYDRAULIC	1	

168. The clamp assembly includes two clamp halves (NSS). It does NOT include the cover plate or hardware.
169. The fitting includes a securing nut (NSS).

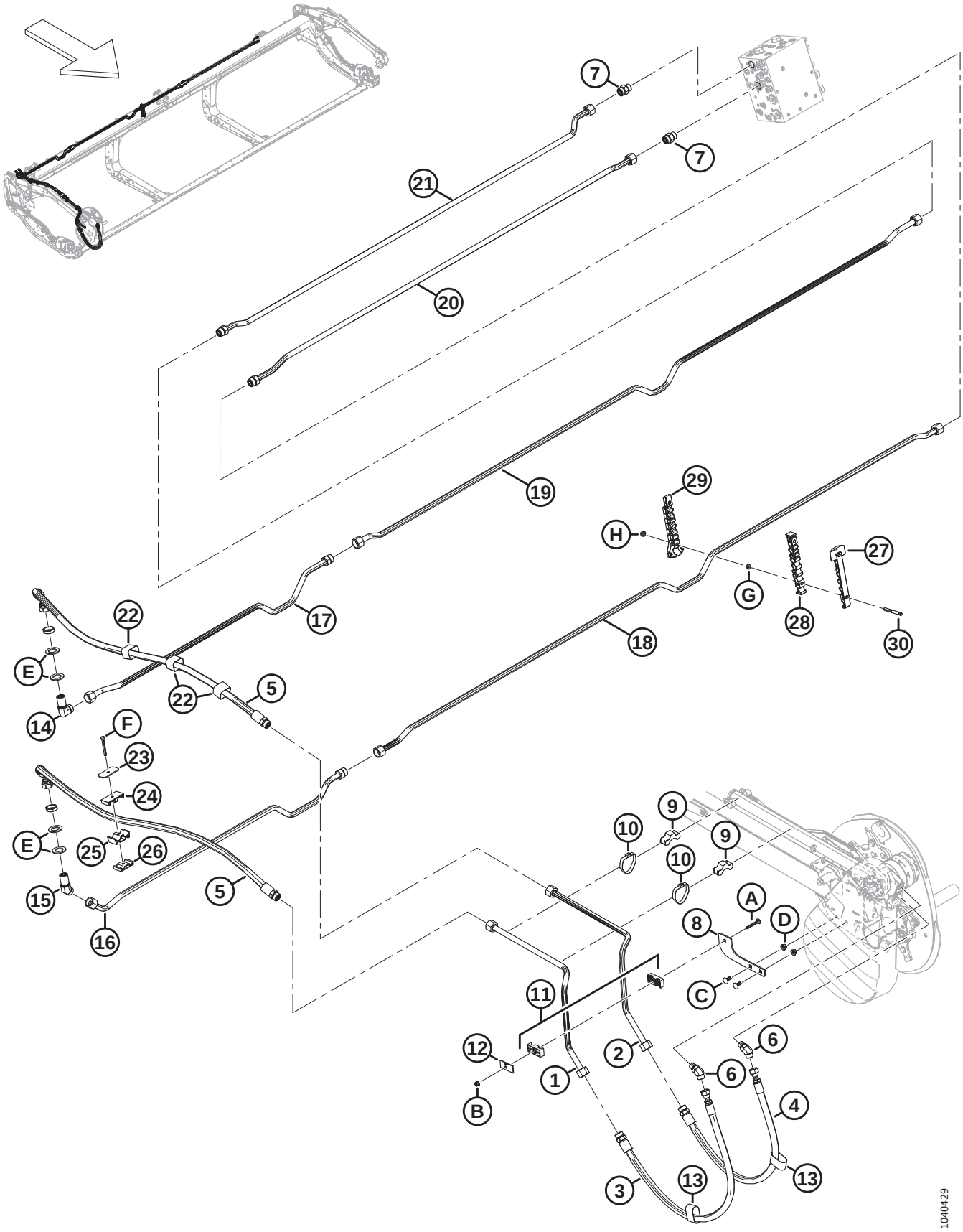
7
7
21
20
19
29
H
27
G
28
30
22
17
18
22
5
E
14
F
23
24
E
25
26
15
5
16
9
10
9
10
A
8
D
C
11
12
B
1
2
6
6
4
3
13
13
1040429

Ref	Part Number	Description	Qty	Serial Number
20	MAC283257	LINE – HYDRAULIC	1	
	MAC135868	O-RING – Ø1.78 X Ø18.77		
21	MAC283252	LINE – HYDRAULIC	1	
	MAC135868	O-RING – Ø1.78 X Ø18.77		
22	MAC135444	CINCH STRAP – 4 IN. LG	3	
23	MAC323023	PLATE – CLAMP CENTER REEL ARM	1	
24	MAC283989	PLATE – HOSE REEL TOP	1	
25	MAC283988	PLATE – HOSE REEL MIDDLE	1	
26	MAC283987	PLATE – HOSE REEL BOTTOM	1	
27	MAC283820	CLAMP – LINE BOTTOM RH	7	
28	MAC283818	CLAMP – LINE MIDDLE RH	7	
29	MAC340549	KIT – RH TOP LINE CLAMP [170]	7	
30	MAC312654	STUD – THRD CLAMP PATCH WING	14	
A	MAC136486	BOLT – RHSN M8 X 1.25 X 60-8.8-AA1J		
B	MAC135337	NUT – HEX FLG CTR LK M8 X 1.25-8-AA1J		
C	MAC135785	BOLT – RHSN M10 X 1.5 X 25-8.8-AA1J		
D	MAC135799	NUT – HEX FLG CTR LOC M10 X 1.5-10		
E	MAC136355	WASHER – FLAT 2.0 IN. OD ZP		
F	MAC184656	BOLT – HEX HD M8 X 1.25 X 70-8.8-AA1J		
G	MAC136442	NUT – HEX THIN M10 X 1.5-05-AA1J		
H	MAC184692	NUT – HEX NYLOC M10 X 1.5-8-AA1J		

170. Includes RH top line clamp (NSS) and two Torx screws (MAC320336).

70 Hydraulics – Reel Drive, Double Reel

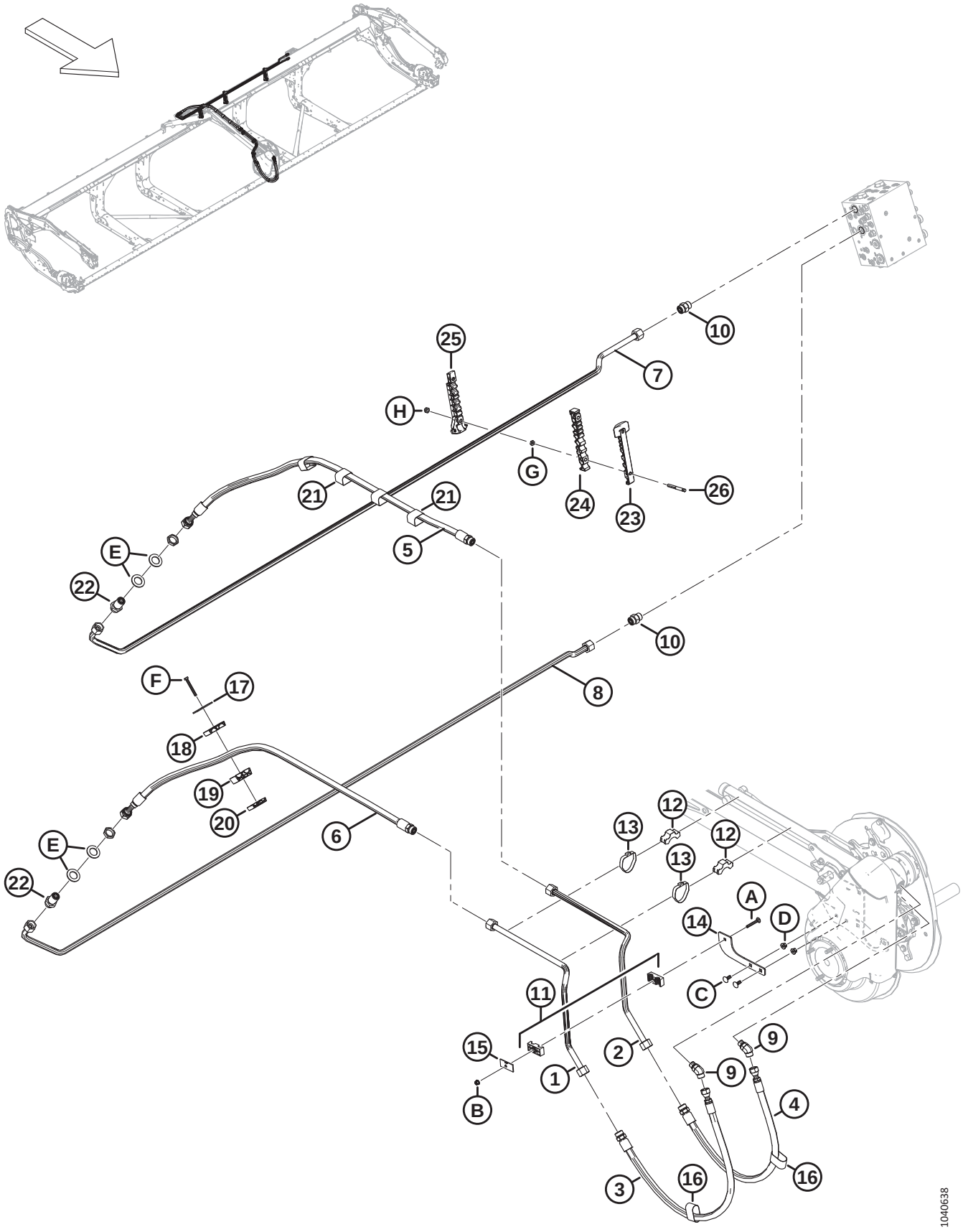

Ref	Part Number	Description	Qty	Serial Number
1	MAC323428	LINE – HYDRAULIC	1	
2	MAC323429	LINE – HYDRAULIC	1	
3	MAC283092	HOSE – HYD	1	
	MAC135868	O-RING – Ø1.78 X Ø18.77		
4	MAC283091	HOSE – HYD	1	
	MAC135868	O-RING – Ø1.78 X Ø18.77		
5	MAC283580	HOSE – HYD	1	
	MAC135868	O-RING – Ø1.78 X Ø18.77		
6	MAC323017	HOSE – HYD	1	
	MAC135868	O-RING – Ø1.78 X Ø18.77		
7	MAC323921	LINE – HYDRAULIC	1	
8	MAC283525	LINE – HYDRAULIC	1	
9	MAC136327	FITTING – ELBOW 45° HYD	2	
	MAC44210	O-RING – Ø2.46 X Ø19.18		
	MAC135867	O-RING – Ø1.78 X Ø15.60		
10	MAC135788	FITTING – ADAPTER	2	
	MAC30971	O-RING – Ø2.95 X Ø23.47		
	MAC135868	O-RING – Ø1.78 X Ø18.77		
11	MAC273285	SUPPORT – BRACKET	1	
12	MAC232405	CLAMP – LINE	2	
13	MAC112823	CLAMP – HOSE	2	
14	MAC232397	CLAMP – ASSY [171]	1	
15	MAC232233	CLAMP – COVER PLATE	1	
16	MAC135443	CINCH STRAP 4 IN. LG	2	
17	MAC323023	PLATE – CLAMP CENTER REEL ARM	1	
18	MAC283989	CLAMP – HOSE REEL TOP	1	
19	MAC283988	CLAMP – HOSE REEL MIDDLE	1	
20	MAC283987	CLAMP – HOSE REEL BOTTOM	1	
21	MAC135444	CINCH STRAP – 4 IN. LG	4	

171. The clamp assembly includes two clamp halves (NSS). It does NOT include the cover plate or hardware.

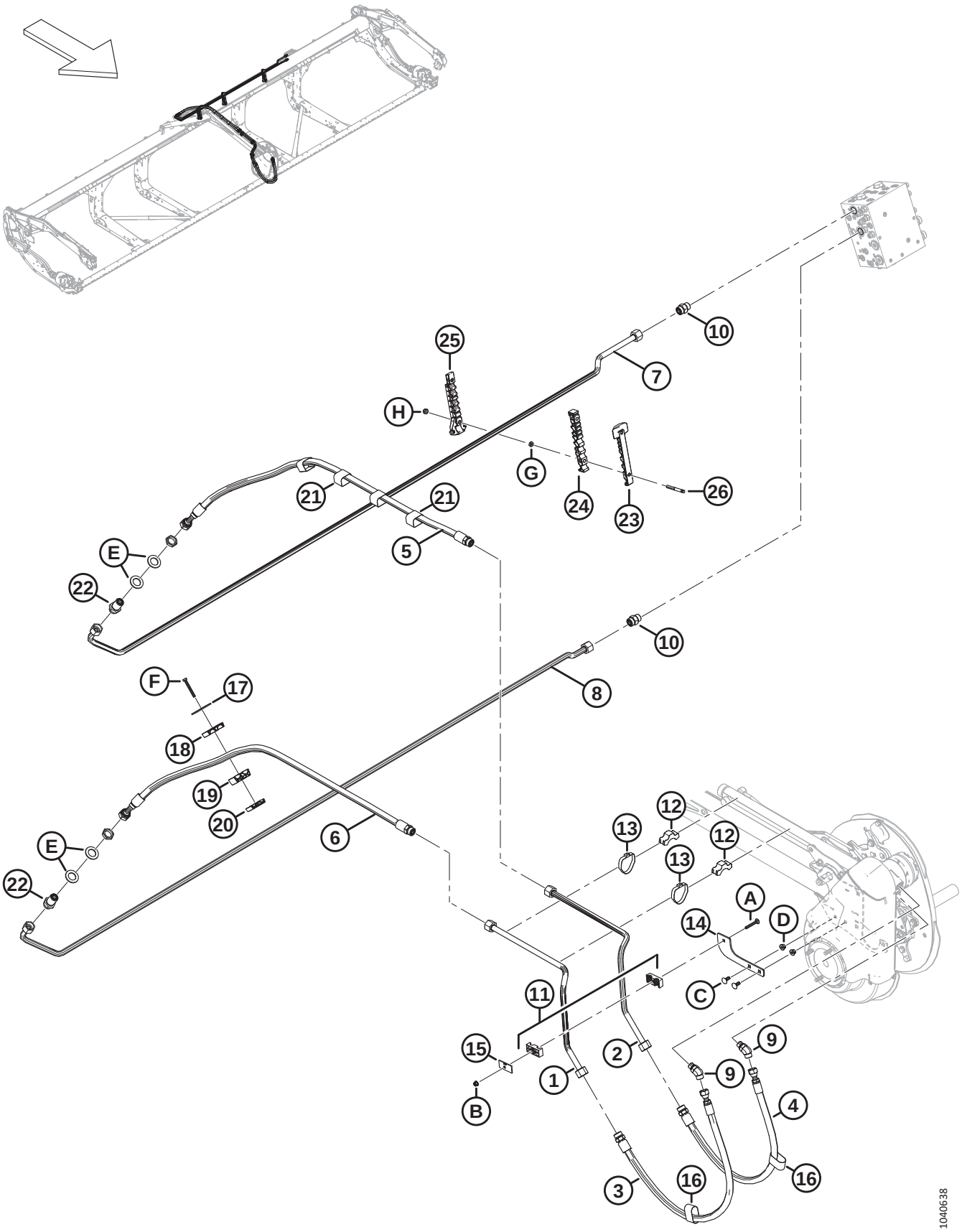
1040638

Ref	Part Number	Description	Qty	Serial Number
22	136254	FITTING — BULKHEAD HYD [172]	2	
	MAC135868	O-RING – Ø1.78 X Ø18.77		
23	MAC283820	CLAMP – LINE BOTTOM RH	3	
24	MAC283818	CLAMP – LINE MIDDLE RH	3	
25	MAC340549	KIT – RH TOP LINE CLAMP [173]	3	
26	MAC312654	STUD – THRD CLAMP PATCH WING	6	
A	MAC136486	BOLT – RHSN M8 X 1.25 X 60-8.8-AA1J		
B	MAC135337	NUT – HEX FLG CTR LK M8 X 1.25-8-AA1J		
C	MAC135785	BOLT – RHSN M10 X 1.5 X 25-8.8-AA1J		
D	MAC135799	NUT – HEX FLG CTR LOC M10 X 1.5-10		
E	MAC136355	WASHER – FLAT 2.0 IN. OD ZP		
F	MAC184656	BOLT – HEX HD M8 X 1.25 X 70-8.8-AA1J		
G	MAC136442	NUT – HEX THIN M10 X 1.5-05-AA1J		
H	MAC184692	NUT – HEX NYLOC M10 X 1.5-8-AA1J		

172. The fitting includes a securing nut (NSS).
173. Includes RH top line clamp (NSS) and two Torx screws (MAC320336).

71 Hydraulics – Upper Cross Auger

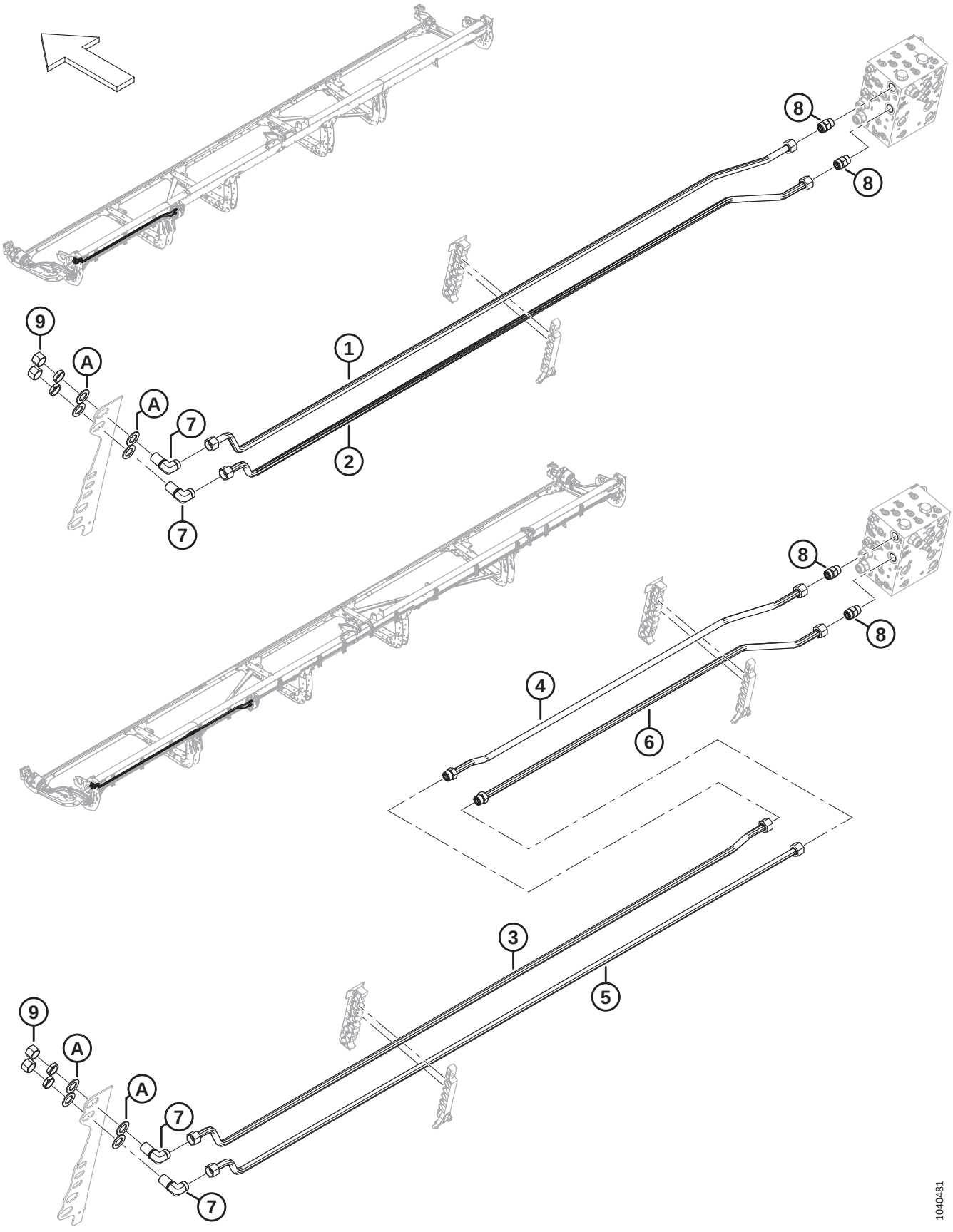

NOTE:

Kits (B-bundle numbers and C-collector numbers) can be purchased from MacDon Whole Goods only.

Ref	Part Number	Description	Qty	Serial Number
	B7338	KIT – 25 FT. UPPER CROSS AUGER HYDRAULICS [174]		
	B7117	KIT – 30 FT. UPPER CROSS AUGER HYDRAULICS [174]		
	B7118	KIT – 35 FT. UPPER CROSS AUGER HYDRAULICS [174]		
	B7120	KIT – 41 FT. UPPER CROSS AUGER HYDRAULICS [174]		
	B7121	KIT – 45 FT. UPPER CROSS AUGER HYDRAULICS [174]		
1	MAC323355	LINE – HYDRAULIC (D225) [175]	1	
	MAC283052	LINE – HYDRAULIC (D230) [176]	1	
	MAC283164	LINE – HYDRAULIC (D235) [177]	1	
	MAC283462	LINE – HYDRAULIC (D241) [178]	1	
2	MAC323355	LINE – HYDRAULIC (D225) [175]	1	
	MAC283051	LINE – HYDRAULIC (D230) [176]	1	
	MAC283205	LINE – HYDRAULIC (D235) [177]	1	
	MAC283461	LINE – HYDRAULIC (D241) [178]	1	
3	MAC283469	LINE – HYDRAULIC (D245) [179]	1	
4	MAC283200	LINE – HYDRAULIC (D245) [179]	1	
	MAC135868	O-RING – Ø1.78 X Ø18.77		
5	MAC283468	LINE – HYDRAULIC (D245) [179]	1	
6	MAC283199	LINE – HYDRAULIC (D245) [179]	1	
	MAC135868	O-RING – Ø1.78 X Ø18.77		
7	MAC136245	FITTING – ELBOW 90° BULKHEAD HYD [180]	2	
	MAC135868	O-RING – Ø1.78 X Ø18.77		

174. Kits are available through Whole Goods only.
175. Used on D225 headers only.
176. Used on D230 headers only.
177. Used on D235 headers only.
178. Used on D241 headers only.
179. Used on D245 headers only.
180. The fitting includes a securing nut.

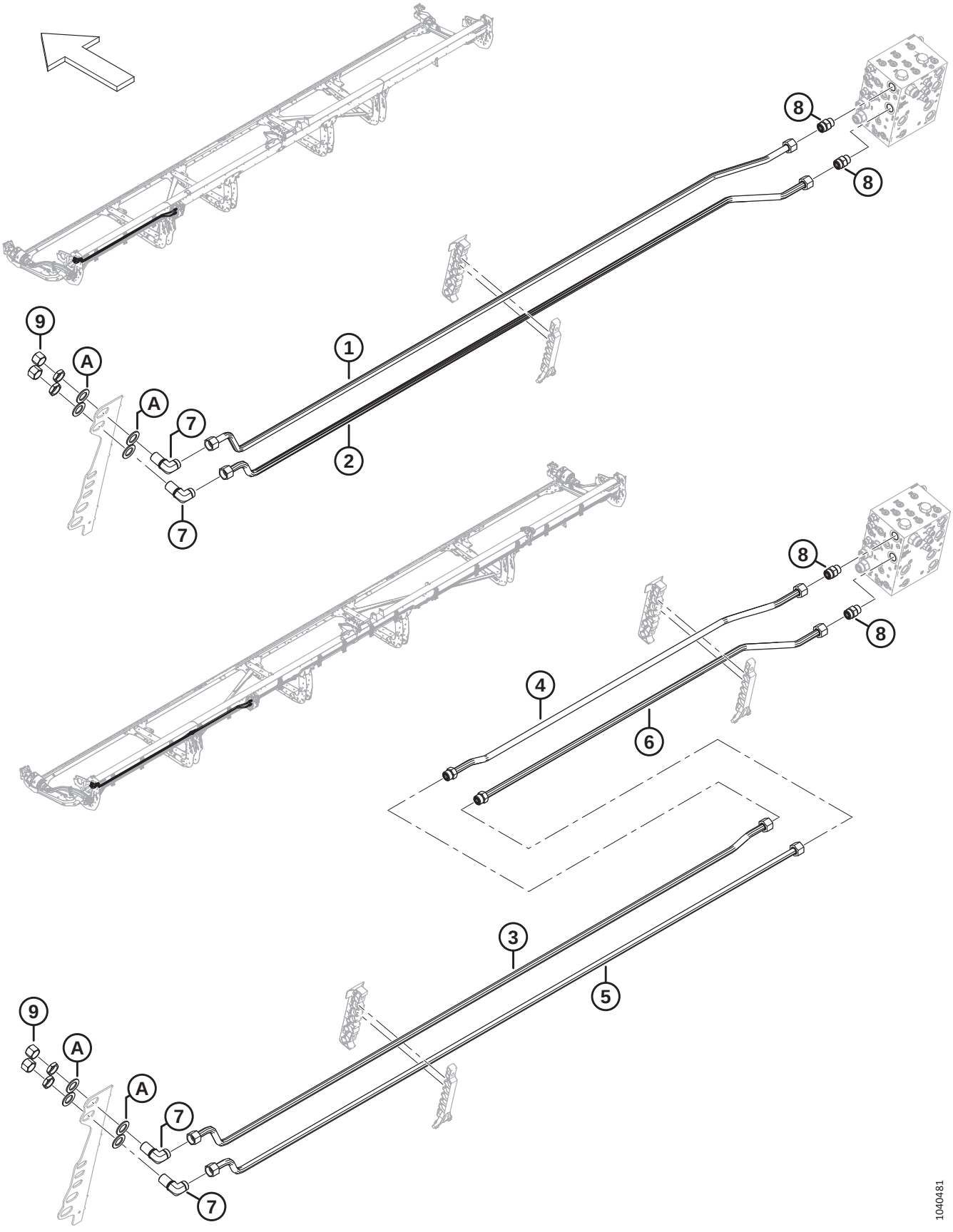
8
8
9
A
A
7
1
2
7
8
8
4
6
9
A
A
7
3
5
7
1040481

Ref	Part Number	Description	Qty	Serial Number
8	MAC135788	FITTING – ADAPTER (UCAP, UCAR)	2	
	MAC30971	O-RING – Ø2.95 X Ø23.47		
	MAC135868	O-RING – Ø1.78 X Ø18.77		
9	MAC135889	CAP – HYD SAE - 12 ORFS	2	
A	MAC136355	WASHER – FLAT 2.0 IN OD ZP	4	

72 Hydraulic Line Covers – Center

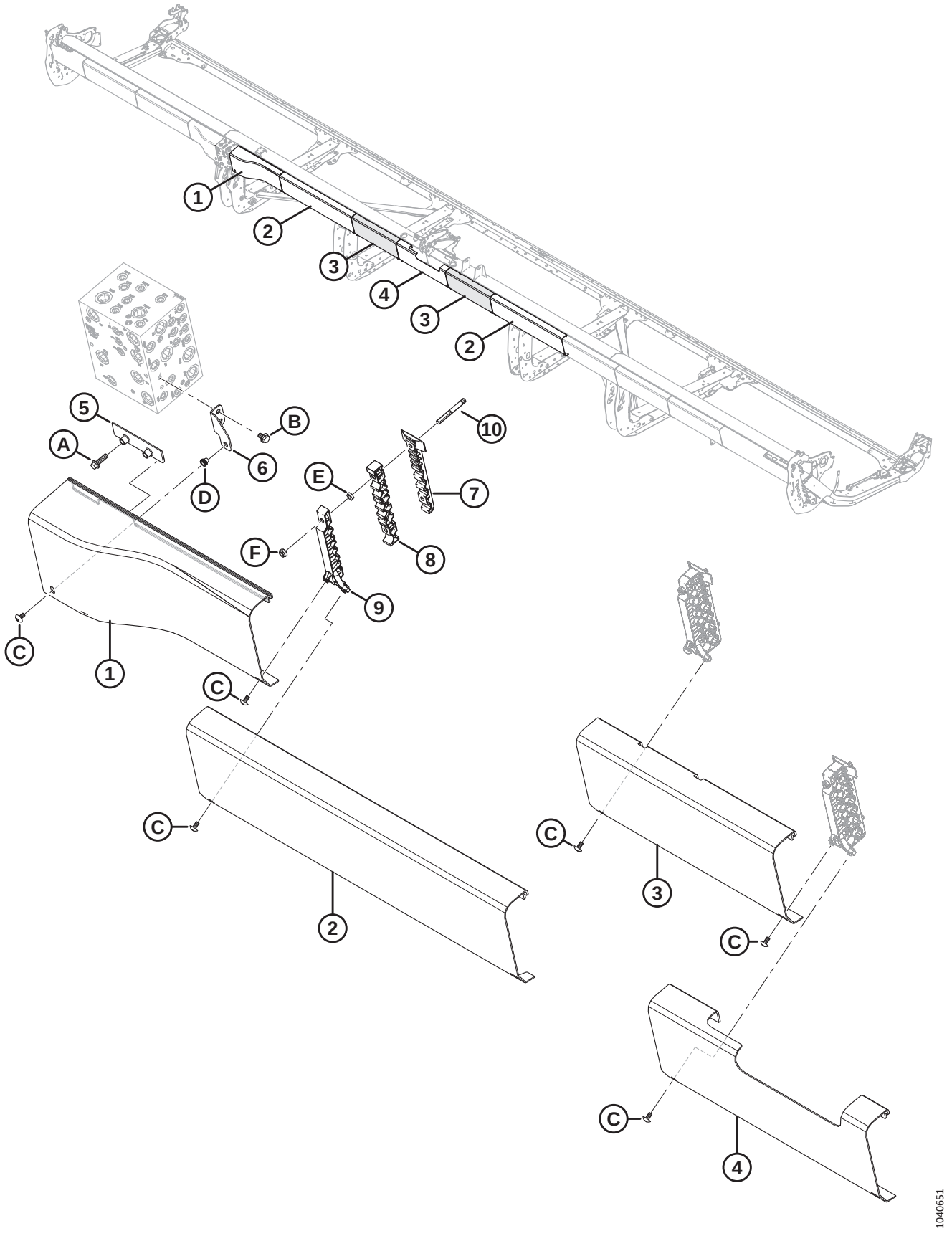

HYDRAULIC LINE COVERS – CENTER

Ref	Part Number	Description	Qty	Serial Number
1	MAC283697	COVER – HYD MANIFOLD, RH	1	
2	MAC323170	COVER – HYD PLASTIC	2	
3	MAC323918	COVER – HYD RIGID OUTER CENTER	2	
4	MAC323168	COVER – HYD RIGID CENTER PLASTIC	1	
5	MAC283849	BRACKET – HYD COVER SUPPORT	1	
6	MAC323773	ASSY – RH SHIELD BRACKET [181]	1	
7	MAC283820	CLAMP – LINE BOTTOM RH	5	
8	MAC283818	CLAMP – LINE MIDDLE RH	5	
9	MAC340549	KIT – RH TOP LINE CLAMP [182]	5	
10	MAC312654	STUD – THRD CLAMP PATCH WING	10	
A	MAC136211	BOLT – HEX FLG HD M10 X 1.5 X 35-8.8-AA1J		
B	MAC136151	BOLT – HEX FLG HD TFL M10 X 1.5 X 16-8.8-AA1J		
C	MAC320336	SCREW – TORX TRUSS HD M8 X 1.25 X 16-SPCL-8.8-AA1T		
D	MAC320448	RIVNUT – M8 X 1.25 HEX		
E	MAC136442	NUT – HEX THIN M10 X 1.5-05-AA1J		
F	MAC184692	NUT – HEX NYLOC M10 X 1.5-8-AA1J		

181. The assembly includes cover mounting connector bracket (NSS) and rivnut (MAC320448).
182. Includes RH top line clamp (NSS) and two Torx screws (MAC320336).

73 Hydraulic Line Covers (D225, D230, and D235)

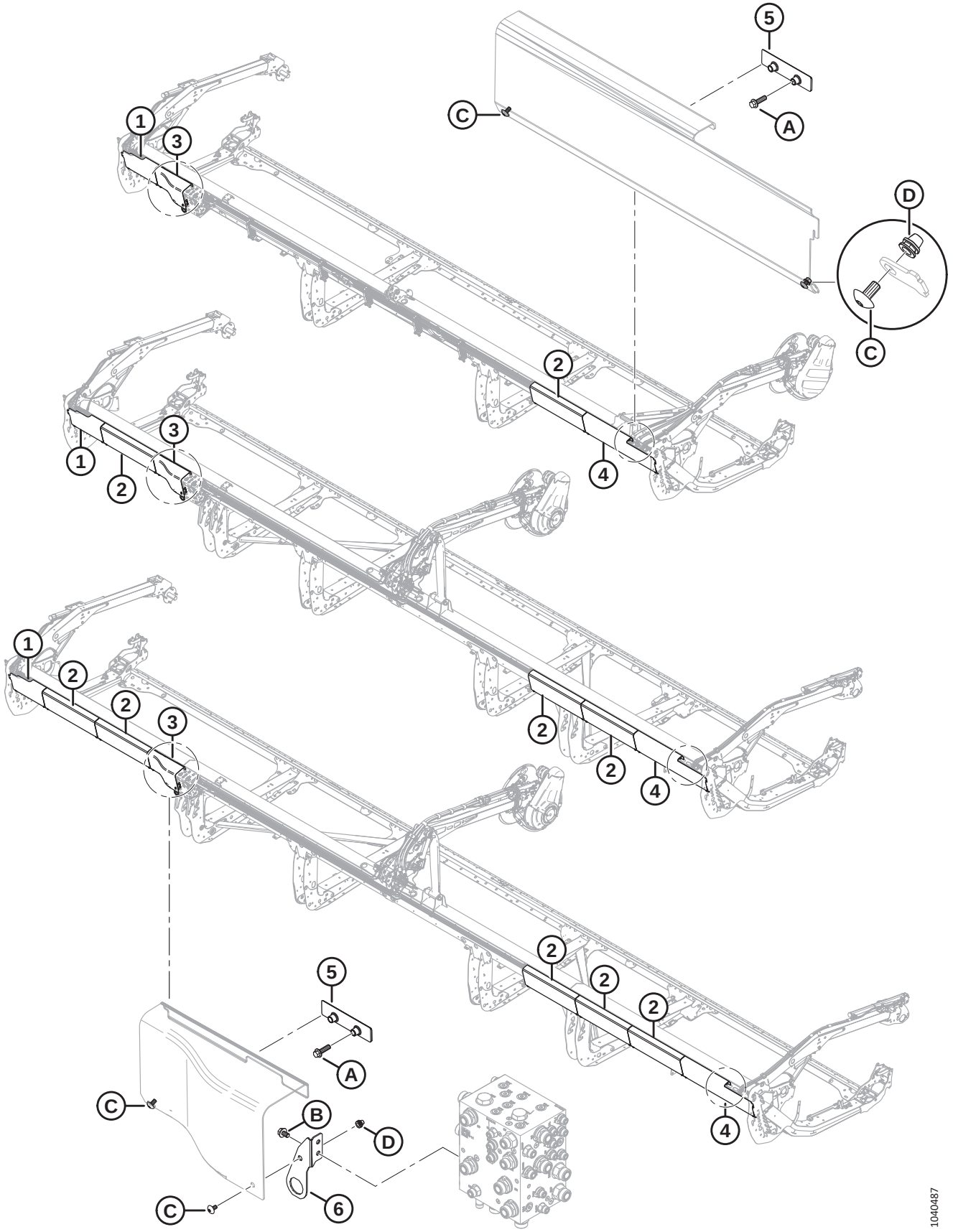

HYDRAULIC LINE COVERS (D225, D230, AND D235)

Ref	Part Number	Description	Qty	Serial Number
1	MAC323164	COVER – HYD LH END PLASTIC	1	
2	MAC323169	COVER – HYD COMMON PLASTIC [183]		
3	MAC323795	COVER – HYD MANIFOLD LH	1	
4	MAC323166	COVER – HYD RH END PLASTIC	1	
5	MAC283849	BRACKET – HYD COVER SUPPORT	2	
6	MAC323772	ASSY – CONNECTOR BRACKET [184]	1	
A	MAC136211	BOLT – HEX FLG HD M10 X 1.5 X 35-8.8-AA1J		
B	MAC136151	BOLT – HEX FLG HD TFL M10 X 1.5 X 16-8.8-AA1J		
C	MAC320336	SCREW – TORX TRUSS HD M8 X 1.25 X 16-SPCL-8.8-AA1T [185]		
D	MAC320448	RIVNUT – M8 X 1.25 HEX		

183. Quantities: D225 = 1, D230 = 3, and D235 =5.
184. The assembly includes cover mounting connector bracket (NSS) and rivnut (MAC320448).
185. Quantities: D225 = 8, D230 = 12, and D235 = 16.

74 Hydraulic Line Covers (D241 and D245)

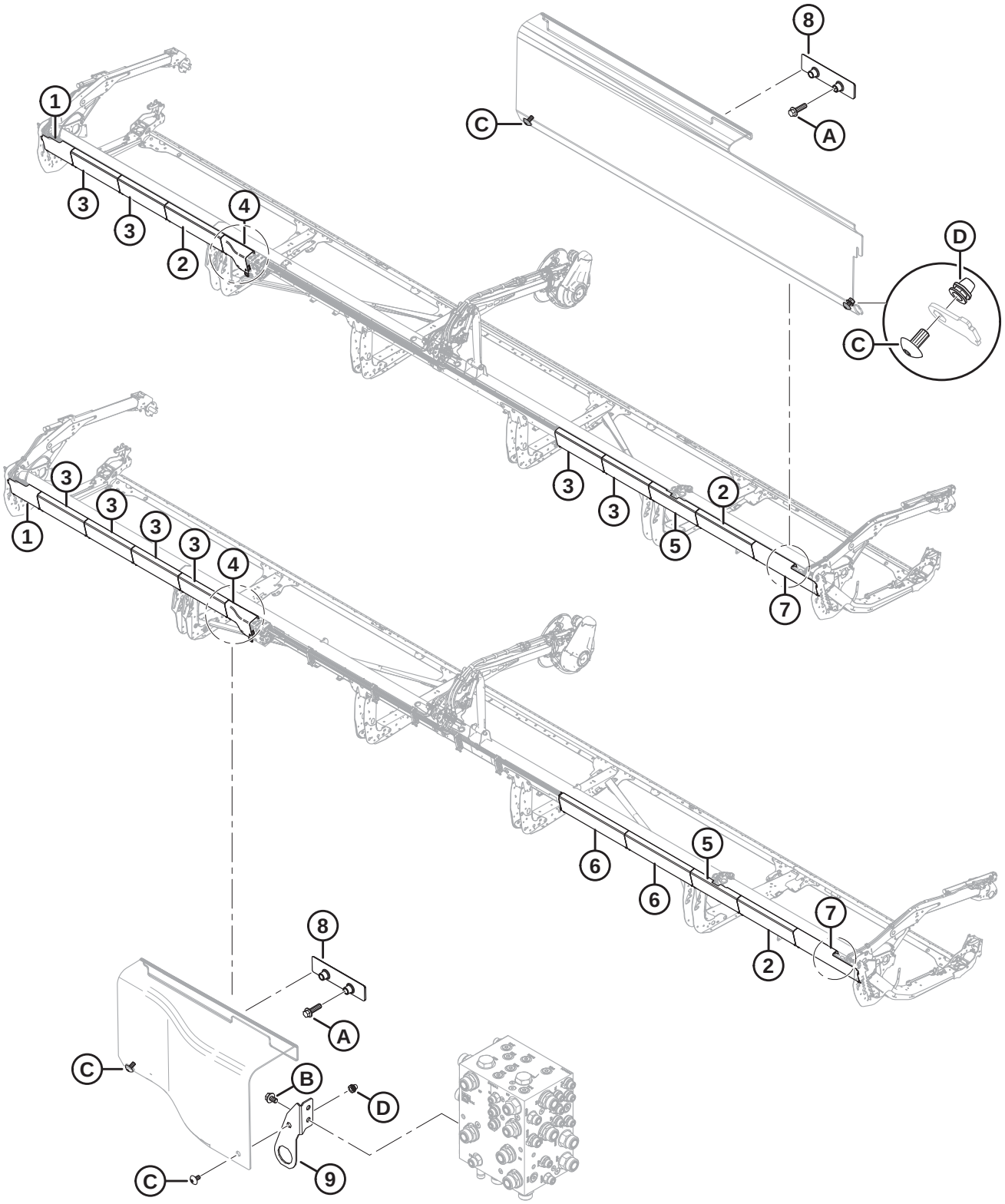

HYDRAULIC LINE COVERS (D241 AND D245)

Ref	Part Number	Description	Qty	Serial Number
1	MAC323164	COVER – HYD LH END PLASTIC	1	
2	MAC323172	COVER – HYD LONG PLASTIC [186]		
3	MAC323169	COVER – HYD COMMON PLASTIC [187]		
4	MAC323795	COVER – HYD MANIFOLD LH	1	
5	MAC323165	COVER – HYD SPLIT PLASTIC [188]		
6	MAC323171	COVER – HYD WIDE PLASTIC [189]		
7	MAC323166	COVER – HYD RH END PLASTIC	1	
8	MAC283849	BRACKET – HYD COVER SUPPORT	2	
9	MAC323772	ASSY – CONNECTOR BRACKET [190]	1	
A	MAC136211	BOLT – HEX FLG HD M10 X 1.5 X 35-8.8-AA1J		
B	MAC136151	BOLT – HEX FLG HD TFL M10 X 1.5 X 16-8.8-AA1J		
C	MAC320336	SCREW – TORX TRUSS HD M8 X 1.25 X 16-SPCL-8.8-AA1T [191]		
D	MAC320448	RIVNUT – M8 X 1.25 HEX		

186. Quantities: D241 = 2, D245 = 1.
187. Quantities: D241 = 4, D245 =4 .
188. Quantities: D241 = 1, D245 = 1.
189. Quantities: D241 = 0, D245 = 2.
190. The assembly includes cover mounting connector bracket (NSS) and rivnut (MAC320448).
191. Quantities: D241 = 20, D245 = 22.

75 Electrical – Harness (D225)

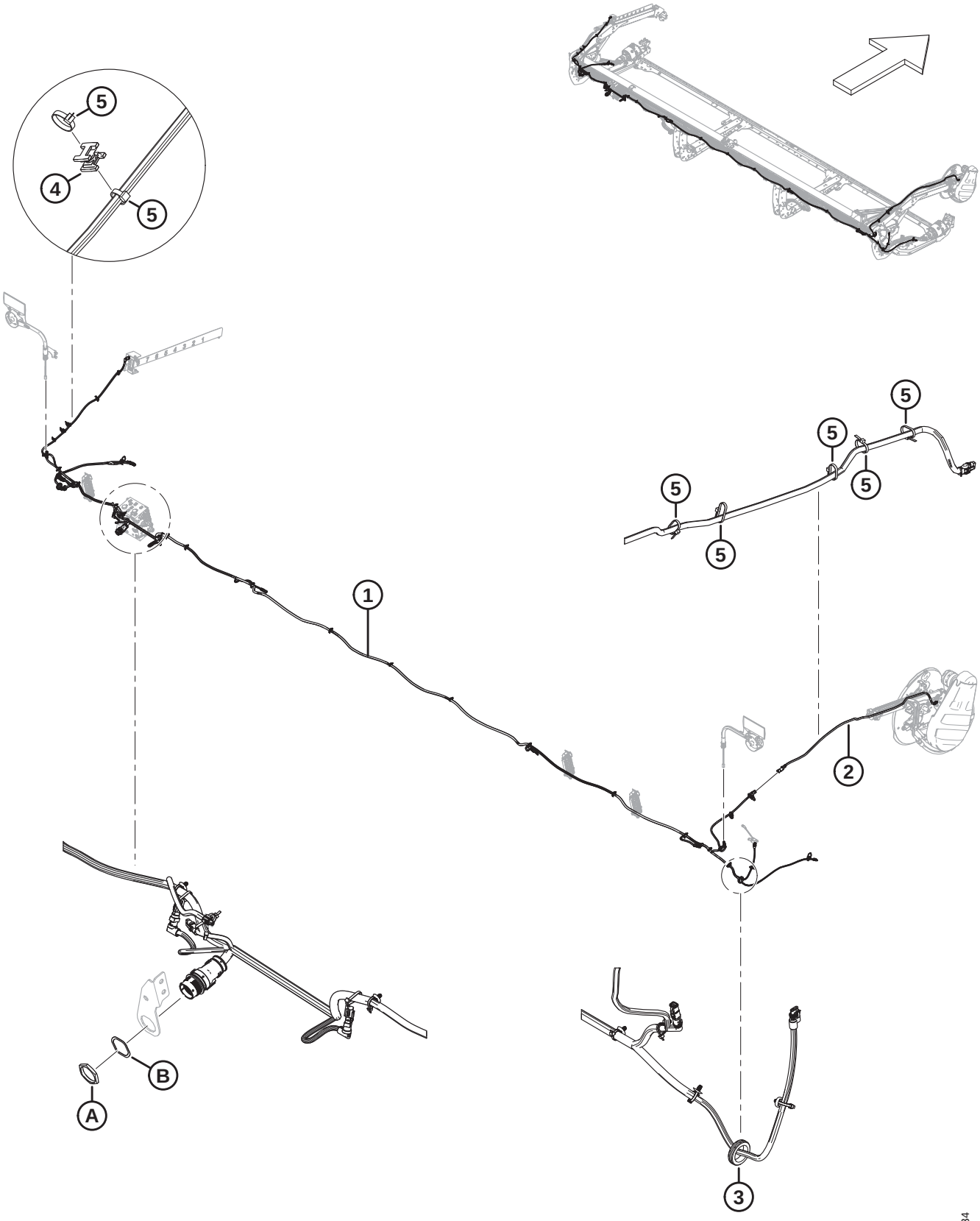

Ref	Part Number	Description	Qty	Serial Number
1	MAC323039	HARNESS – D225, MAIN [192]	1	
2	MAC323145	HARNESS – HDR EXT. REEL ARM	1	
3	MAC323130	GROMMET – RUBBER	1	
4	MAC134442	SPACER – DUAL SWIVEL SADDLE	9	
5	MAC21763	FASTENER – CABLE TIE, BLACK, 160 MM LG	A/R	
A	MAC134728	NUT – PANEL, HDP 20, SIZE 24		
B	MAC134730	WASHER – LOCK, HDP 20, SIZE 24		

192. The harness comes complete with all fir tree fasteners (MAC136655) attached.

76 Electrical – Harness (D230, D235, D241, and D245)

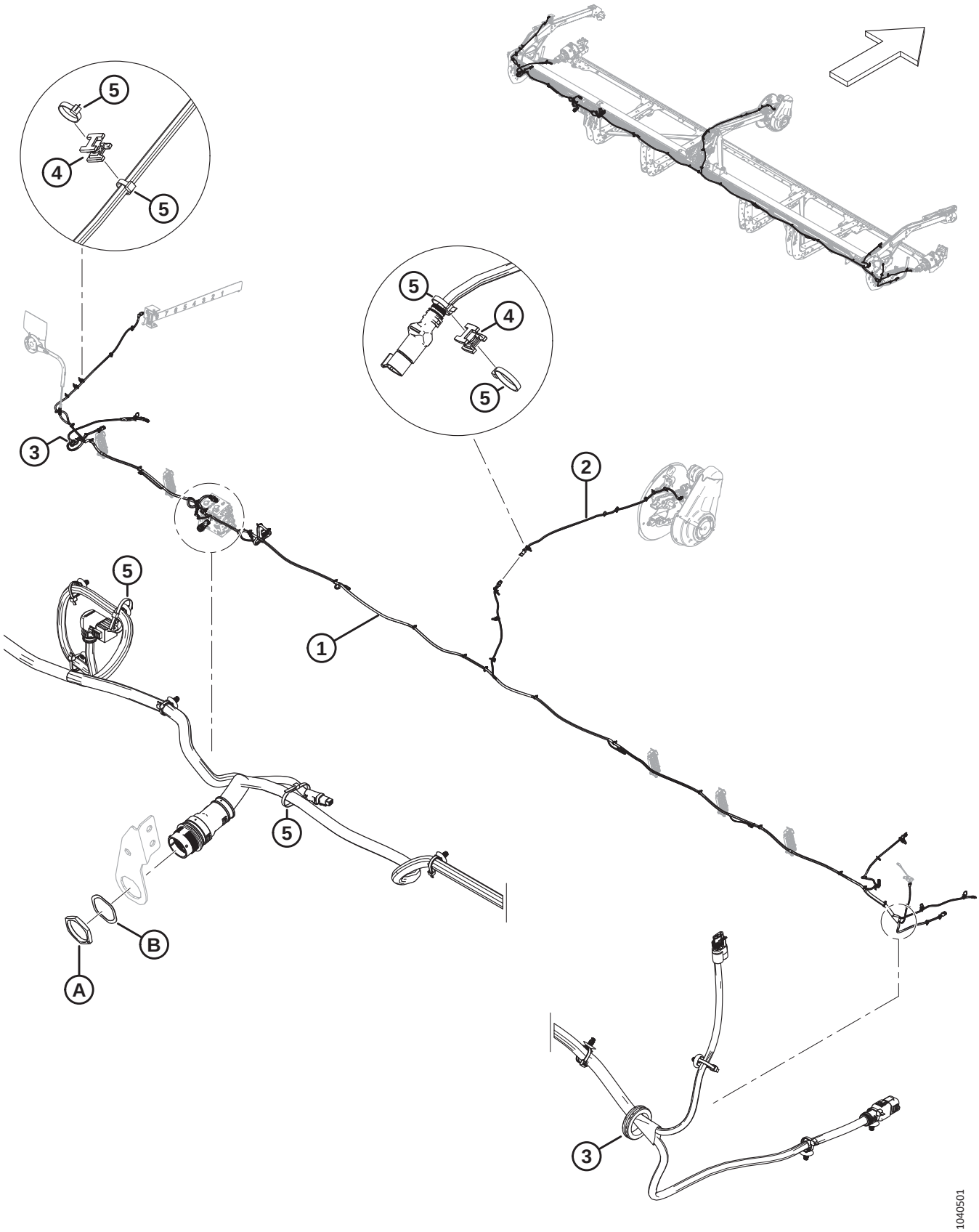

ELECTRICAL – HARNESS (D230, D235, D241, AND D245)

Ref	Part Number	Description	Qty	Serial Number
1	MAC323040	HARNESS – D230, MAIN [193]	1	
	MAC323041	HARNESS – D235, MAIN [193]	1	
	MAC323042	HARNESS – D241, MAIN [193]	1	
	MAC323043	HARNESS – D245, MAIN [193]	1	
	MAC136655	FASTENER – FIR TREE MT W/ TIE	A/R	
2	MAC323145	HARNESS – HDR EXT. REEL ARM	1	
3	MAC323130	GROMMET – RUBBER	2	
4	MAC134442	SPACER – DUAL SWIVEL SADDLE [194]		
5	MAC21763	FASTENER – CABLE TIE, BLACK, 160 MM LG	A/R	
A	MAC134728	NUT – PANEL, HDP 20, SIZE 24		
B	MAC134730	WASHER – LOCK, HDP 20, SIZE 24		

193. The harness comes complete with all fir tree fasteners (MAC136655) attached.
194. Quantities: D230 = 12, D235 =10, D241 = 9, D245 = 9

77 Electrical – Clearance Lights

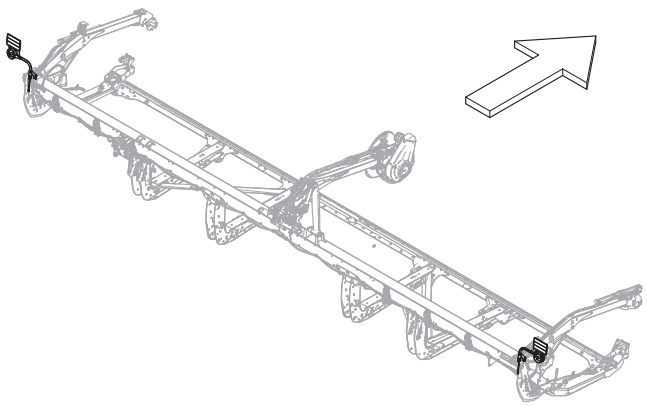

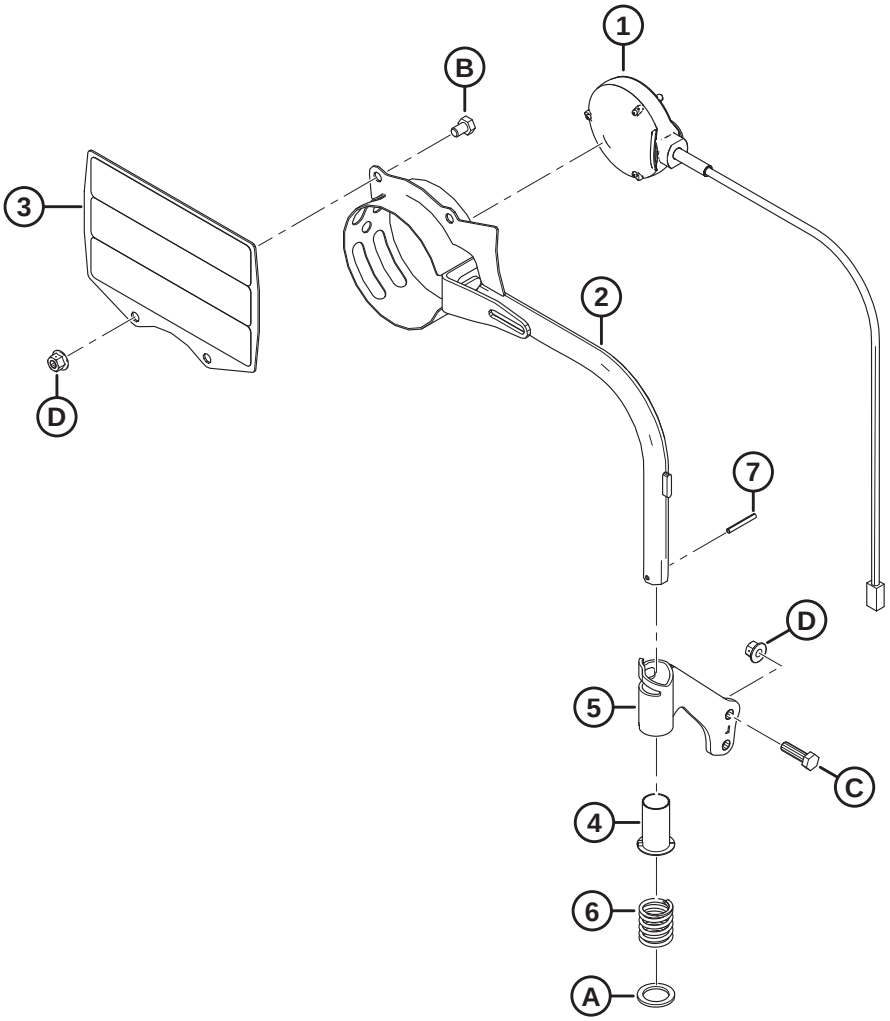

1040539

ELECTRICAL – CLEARANCE LIGHTS

Ref	Part Number	Description	Qty	Serial Number
1	MAC313940	LIGHT – MARKER, AMBER	2	
2	MAC313192	WELDT – CLEARANCE LIGHT	2	
3	MAC313644	ASSY – RIGID REFLECTOR [195]	2	
4	MAC233912	BUSHING	2	
5	MAC233914	ASSY – LH TUBE MOUNT [196]	1	
	MAC233913	ASSY – RH TUBE MOUNT [196]	1	
6	MAC313064	SPRING – COMPRESSION	2	
7	MAC7642	PIN – SPRING 3/16 DIA X 1.5 LG	2	
A	MAC320248	WASHER – FLAT		
B	MAC50071	BOLT – HEX HD TFL M10 X 1.5 X 15-8.8-AA1J		
C	MAC30628	BOLT – HEX HD M10 X 1.5 X 35-8.8-AA1J		
D	MAC135799	NUT – HEX FLG CTR LOC M10 X 1.5-10		

195. The reflector assembly includes two reflectors (MAC307727).
196. The tube mount assembly includes bushing (MAC233912).

78 Electrical – Reel Height Sensor

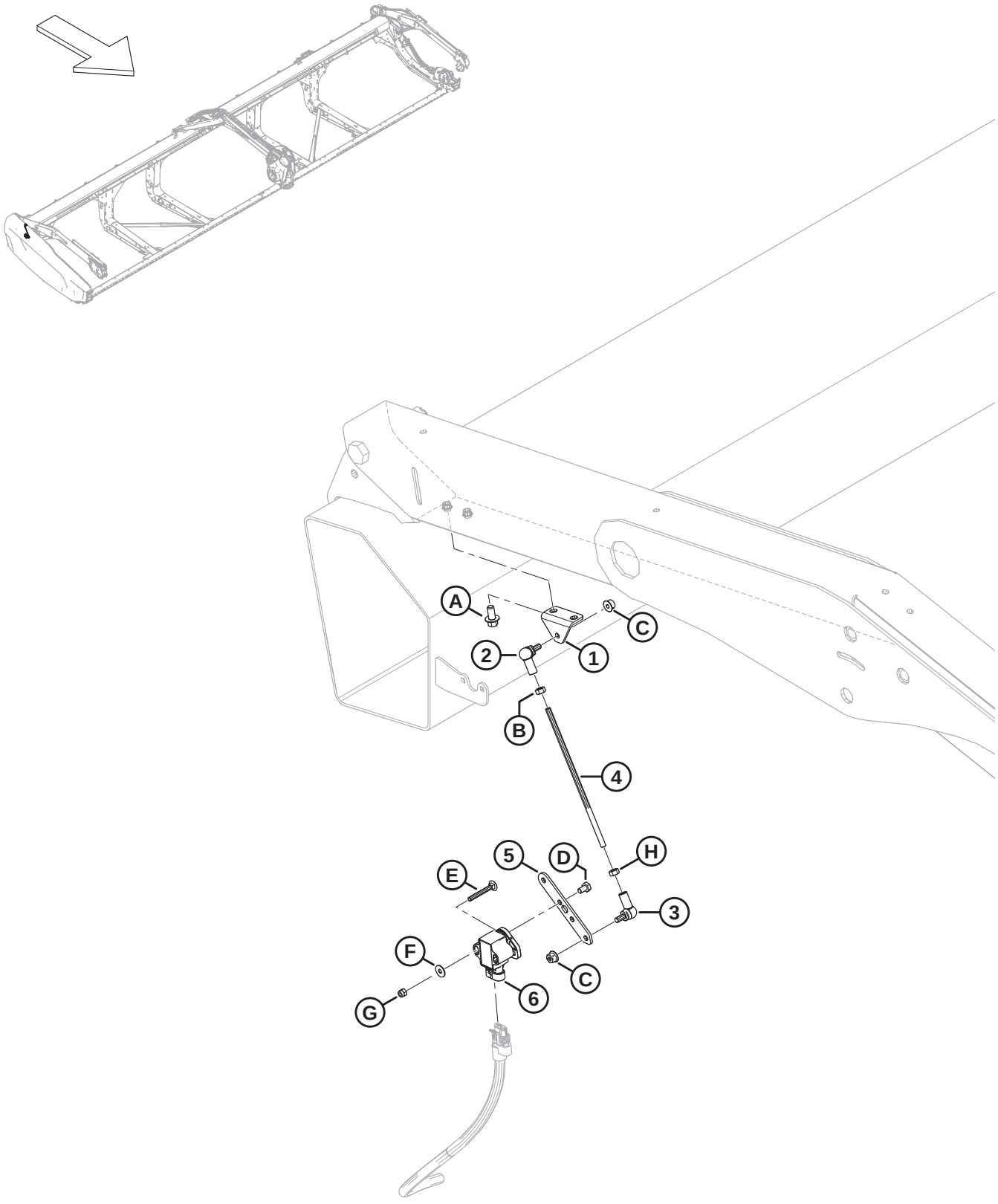

Ref	Part Number	Description	Qty	Serial Number
1	MAC251881	BRACKET	1	
2	MAC291484	BALL JOINT – RH THREAD	1	
3	MAC291485	BALL JOINT – LH THREAD	1	
4	MAC232676	ROD – THREADED	1	
5	MAC251879	ARM – FLOAT SENSOR	1	
6	MAC248643	ROTARY SENSOR – DUAL OUTPUT	1	
A	MAC136485	BOLT – HEX FLG HD TFL M8 X 1.25 X 16-8.8-AA1J		
B	MAC184683	NUT – HEX ISO 4032 M6 X 1-8-ZINC		
C	MAC152668	NUT – HEX FLG CTR LOC M6 X 1-8		
D	MAC136561	BOLT – HEX HD TFL M6 X 1 X 10-8.8-AA1J		
E	MAC136604	BOLT – RHSN TFL M5 X 0.8 X 40-8.8-AA1J		
F	MAC184701	WASHER – FLAT LARGE M5-200HV		
G	MAC197230	NUT – HEX NYLOC M5 X 0.8-8-AA1J		
H	MAC136613	NUT – HEX LH ISO 4032 M6 X 1-8 ZINC		

79 Electrical – Reel Fore-Aft Sensor

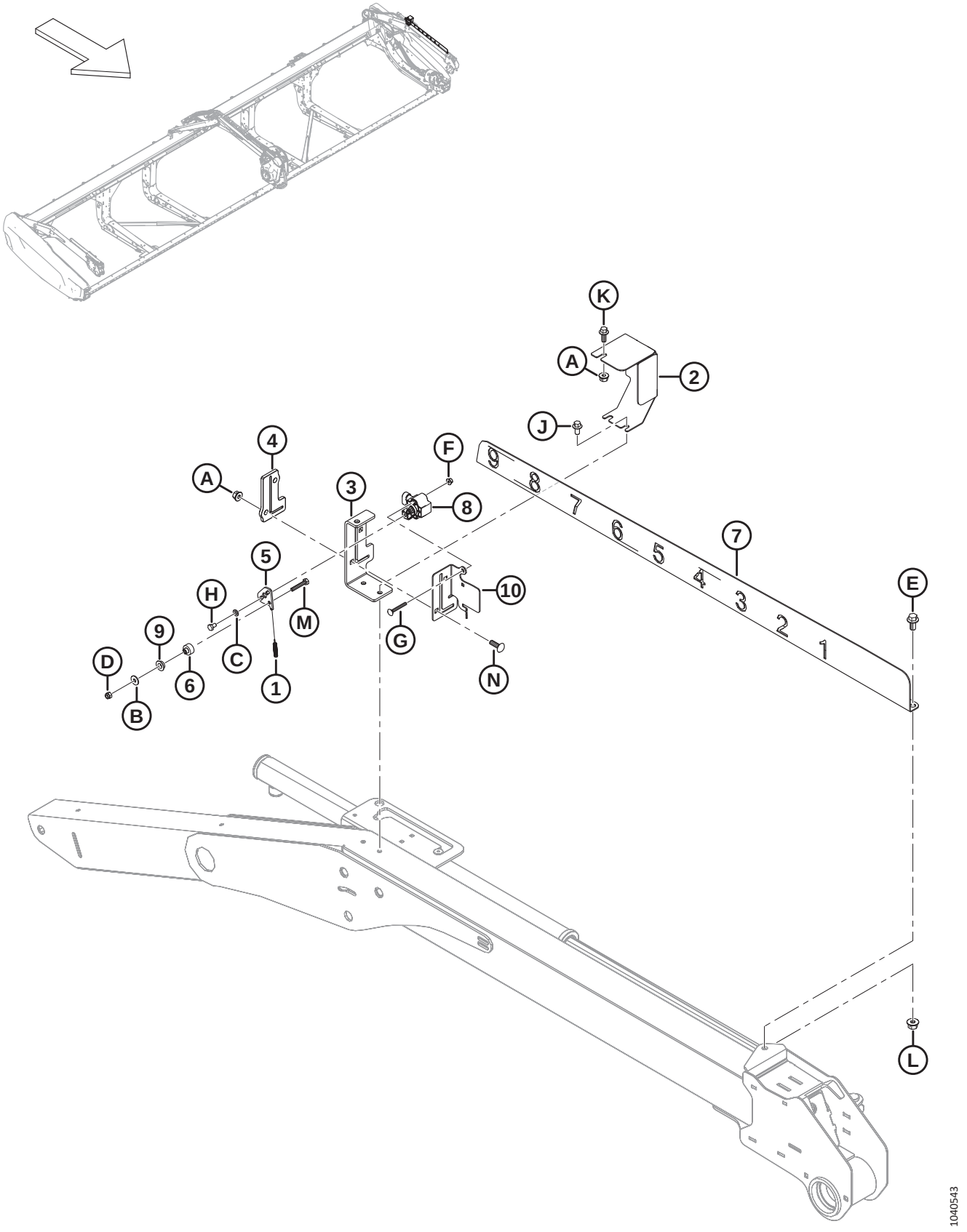

ELECTRICAL – REEL FORE-AFT SENSOR

Ref	Part Number	Description	Qty	Serial Number
1	MAC328556	SPRING – EXTENSION	1	
2	MAC328547	COVER – F/A SENSOR	1	
3	MAC340218	SUPPORT – REEL F/A INDICATOR	1	
4	MAC311318	GUIDE – REEL F/A	1	
5	MAC328539	ARM – F/A SENSOR	1	
6	MAC328534	SPACER – SENSOR BUSHING	1	
7	MAC328532	INDICATOR – REEL F/A	1	
8	MAC248643	ROTARY SENSOR – DUAL OUTPUT	1	
9	MAC206340	BUSHING – SHOULDER, M10	1	
10	MAC340183	PLATE – SENSOR SUPPORT	1	
A	MAC135337	NUT – HEX FLG CTR LK M8 X 1.25-8-AA1J		
B	MAC184706	WASHER – FLAT LARGE M6-200HV		
C	MAC184705	WASHER – FLAT M6-200HV-AA1J		
D	MAC184685	NUT – HEX NYLOC M6 X 1-8-AA1J		
E	MAC152655	BOLT – HEX FLG HD M10 X 1.5 X 20-8.8-AA1J		
F	MAC136635	NUT – HEX FLG CTR LOC M5 X 0.8-8-AA1J		
G	MAC197229	BOLT – RHSN TFL M5 X 0.8 X 35-4.6-AA1J		
H	MAC136561	BOLT – HEX HD TFL M6 X 1 X 10-8.8-AA1J		
J	MAC136485	BOLT – HEX FLG HD TFL M8 X 1.25 X 16-8.8-AA1J		
K	MAC136300	BOLT – HEX FLG HD TFL M8 X 1.25 X 20-8.8-AA3L		
L	MAC135799	NUT – HEX FLG CTR LOC M10 X 1.5-10		
M	MAC109613	BOLT – HEX HD TFL M6 X 1 X 35-8.8-AA1J		
N	MAC136824	BOLT – RHSSN M8 X 1.25 X 25-8.8-AA1J		

80 Decals and Reflectors – D2 Series

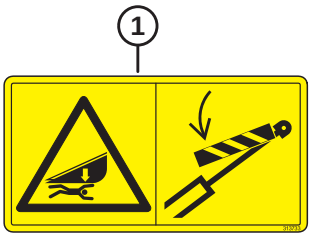

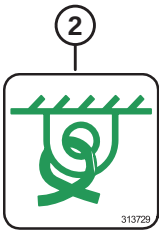

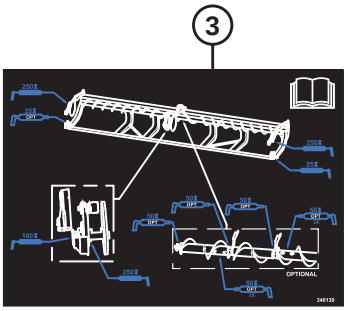

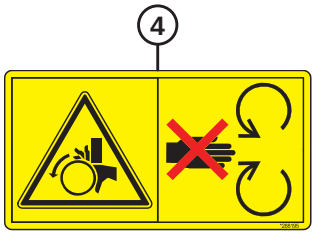



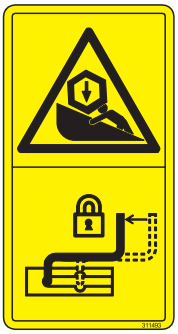



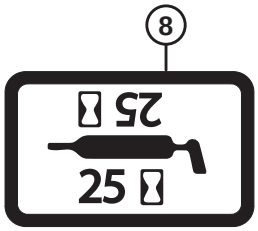



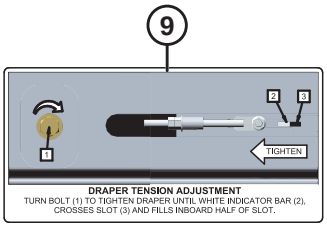

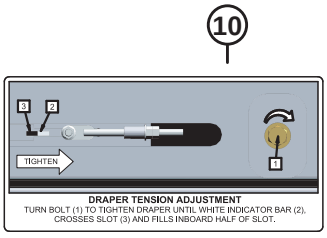

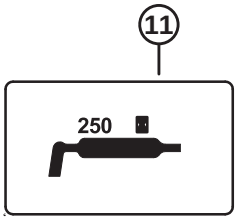



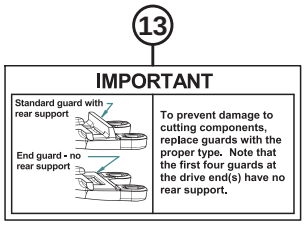



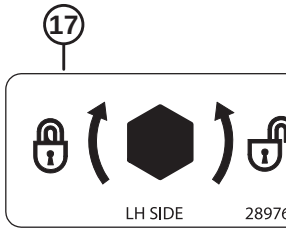

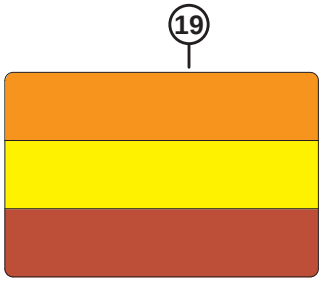

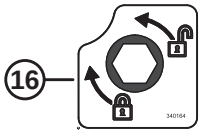

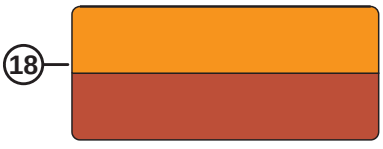

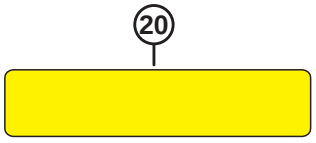

1040550

DECALS AND REFLECTORS – D2 SERIES

Ref	Part Number	Description	Qty	Serial Number
1	MAC313733	DECAL – HEADER HAZARD		
2	MAC313729	DECAL – TIE DOWN		
3	MAC313768	DECAL – GREASE, SR, 2PC AUGER RIGID		
	MAC340129	DECAL – GREASE, DR, 2PC AUGER RIGID		
	MAC340130	DECAL – GREASE, DR, 3PC AUGER RIGID		
4	MAC288195	DECAL – ROTATING PART		
5	MAC313725	DECAL – MANUAL/HPF/HAZARD		
6	MAC311493	DECAL – CENTER REEL PROP LOCK		
7	MAC360541	DECAL – REEL ENTANGLEMENT/HAZARD		
8	MAC23164	DECAL – 25 HR LUBE		
	MAC115759	DECAL – GREASE 100 HR		
9	MAC279528	DECAL – RH DRAPER TENSION		
10	MAC220084	DECAL – LH DRAPER TENSION		
11	MAC323516	DECAL – GREASE (250 HRS)		
12	MAC174436	DECAL – HIGH PRESSURE FLUID		
13	MAC129313	DECAL – IMPORTANT: GUARDS		
14	MAC32070	DECAL – PATENT NUMBER		
15	MAC132117	STRIP – ANTI SLIP		
16	MAC340164	DECAL – CAM LATCH		
17	MAC289762	DECAL – DIVIDER LATCH-LH		
	MAC289763	DECAL – DIVIDER LATCH-RH		
18	MAC313787	REFLECTOR – RED/ORANGE, 230 MM [197]		
	MAC273873	REFLECTOR – DOUBLE-RED/ORANGE, 655 MM (8 IN. CENTER TUBE) [198]		
19	MAC307727	REFLECTOR (CLEARANCE LIGHTS)		
20	MAC115146	REFLECTOR – AMBER, 230 MM		
	MAC273440	REFLECTOR – AMBER, 655 MM (8 IN. CENTER TUBE) [198]		
	MAC165524	REFLECTOR – RED, 230 MM [199]		

197. The reflector is used for plastic/PVC surfaces.
198. The reflector is used on the reel center tubes.
199. The reflector is used on the right header endshield.

81 Decals – Product Identification, New Holland

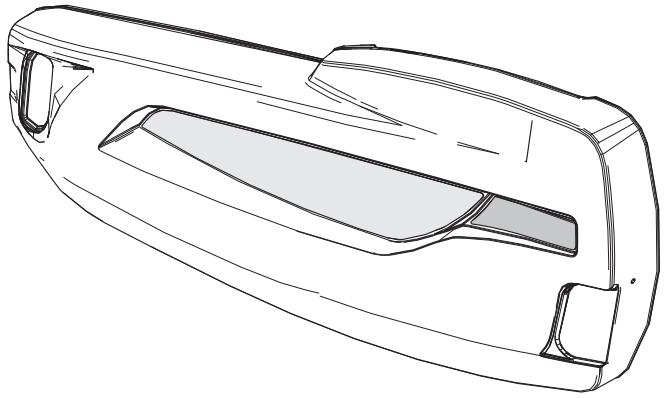

1

BY MacDon

2

3

D225

4

D230

5

D235

6

D241

7

D245

1040655

DECALS – PRODUCT IDENTIFICATION, NEW HOLLAND

Ref	Part Number	Description	Qty	Serial Number
1	MAC360421	DECAL – BY MACDON NH YEL, LH	1	
	MAC360422	DECAL – BY MACDON NH YEL, RH	1	
2	MAC360446	DECAL – NH YELLOW, LH	1	
	MAC360447	DECAL – NH YELLOW, RH	1	
3	MAC360414	DECAL – D225 NH MODEL NBR	1	
4	MAC360415	DECAL – D230 NH MODEL NBR	1	
5	MAC360416	DECAL – D235 NH MODEL NBR	1	
6	MAC360417	DECAL – D241 NH MODEL NBR	1	
7	MAC360418	DECAL – D245 NH MODEL NBR	1	

82 Decals – French



1



2



3



4

1036707

DECALS – FRENCH

Ref	Part Number	Description	Qty	Serial Number
1	MAC340049	DECAL – OIL, IMPORTANT, FRENCH		
2	MAC245433	DECAL – IMPORTANT: GUARDS, FRENCH		
3	MAC245432	DECAL – RH DRAPER TENSION, FRENCH		
4	MAC245428	DECAL – LH DRAPER TENSION, FRENCH		

83 Decals – Portuguese



1



2



3



4

1036719

DECALS – PORTUGUESE

Ref	Part Number	Description	Qty	Serial Number
1	MAC340051	DECAL – OIL, IMPORTANT, PORTUGUESE		
2	MAC220817	DECAL – IMPORTANT: GUARDS, PORTUGUESE		
3	MAC220836	DECAL – RH DRAPER TENSION, PORTUGUESE		
4	MAC220824	DECAL – LH DRAPER TENSION, PORTUGUESE		

84 Decals – Russian



1



2



РЕГУЛИРОВКА НАТЯЖЕНИЯ ПОЛОТНА
ПОВОРАЧИВАЙТЕ БОЛТ (1) ДЛЯ НАТЯЖЕНИЯ ПОЛОТНА ПОКА БЕЛЫЙ ИНДИКАТОР (2), НЕ ПЕРЕМЕСТИТСЯ В СЕРЕДИНУ ПРОРЕЗИ (3) С ВНУТРЕННЕЙ СТОРОНЫ

3

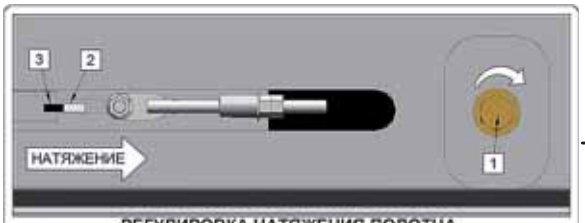

РЕГУЛИРОВКА НАТЯЖЕНИЯ ПОЛОТНА
ПОВОРАЧИВАЙТЕ БОЛТ (1) ДЛЯ НАТЯЖЕНИЯ ПОЛОТНА ПОКА БЕЛЫЙ ИНДИКАТОР (2), НЕ ПЕРЕМЕСТИТСЯ В СЕРЕДИНУ ПРОРЕЗИ (3) С ВНУТРЕННЕЙ СТОРОНЫ

4

1036727

DECALS – RUSSIAN

Ref	Part Number	Description	Qty	Serial Number
1	MAC340052	DECAL – OIL, IMPORTANT, RUSSIAN		
2	MAC220832	DECAL – IMPORTANT: GUARDS, RUSSIAN		
3	MAC220834	DECAL – RH DRAPER TENSION, RUSSIAN		
4	MAC220831	DECAL – LH DRAPER TENSION, RUSSIAN		

85 Decals – Spanish



1



2



3



4

1036716

DECALS – SPANISH

Ref	Part Number	Description	Qty	Serial Number
1	MAC340050	DECAL – OIL, IMPORTANT, SPANISH		
2	MAC220807	DECAL – IMPORTANT: GUARDS, SPANISH		
3	MAC220835	DECAL – RH DRAPER TENSION, SPANISH		
4	MAC220814	DECAL – LH DRAPER TENSION, SPANISH		

86 (Option) Crop Lifters and Storage Rack

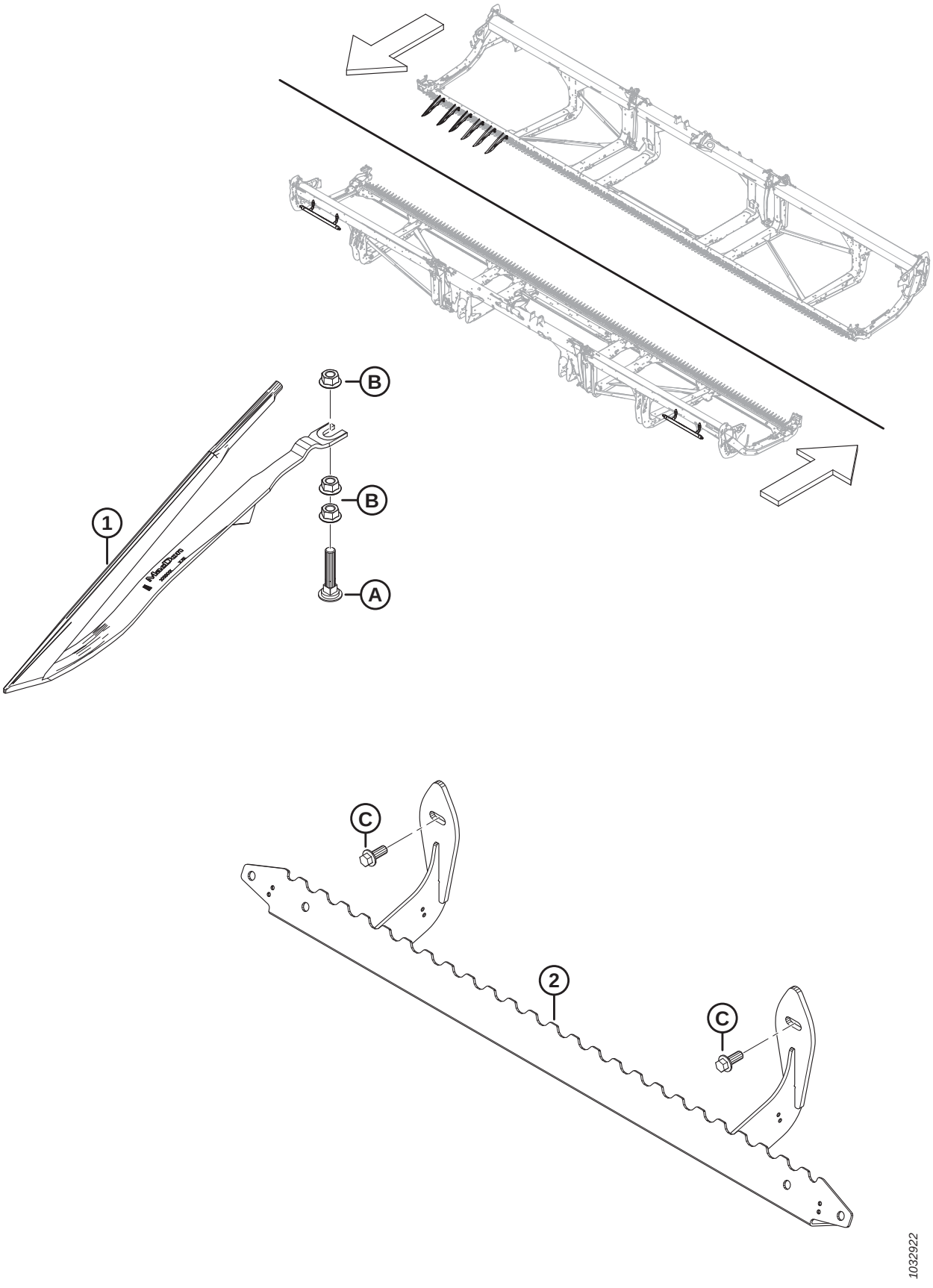

(OPTION) CROP LIFTERS AND STORAGE RACK

NOTE:

Kits (B-bundle numbers and C-collector numbers) can be purchased from MacDon Whole Goods only.

Ref	Part Number	Description	Qty	Serial Number
	B7022	KIT – CROP LIFTER [200]		
	B7023	KIT – LIFTER STORAGE RACK [201]		
1	MAC233748	DEFLECTOR – CROP LIFTER	A/R	
2	MAC233770	SUPPORT – LIFTER STORAGE WELDT	1	
A	MAC226280	BOLT – RHSN SPCL M12 X 60-8.8		
B	MAC136036	NUT – HEX SM FLG M12 X 1.75-8-AA1J		
C	MAC136312	BOLT – HEX FLG HD TFL M10 X 1.5 X 25-10.9-AA1J		

200. Crop lifters are recommended for severely lodged cereal crops where the Operator wants maximum possible stubble height. Quantity of kits required varies depending on header size: D225 and D230 = 3 kits; D235 and D241 = 4 kits; D245 = 5 kits. Kits are available through Whole Goods only.
201. Quantities of Lifter Storage Rack kits required varies depending on header size. D225 = 1 kit; D230, D235, D241, and D245 = 2 kits. Kits are available through Whole Goods only.

87 (Option) Divider Storage Bracket

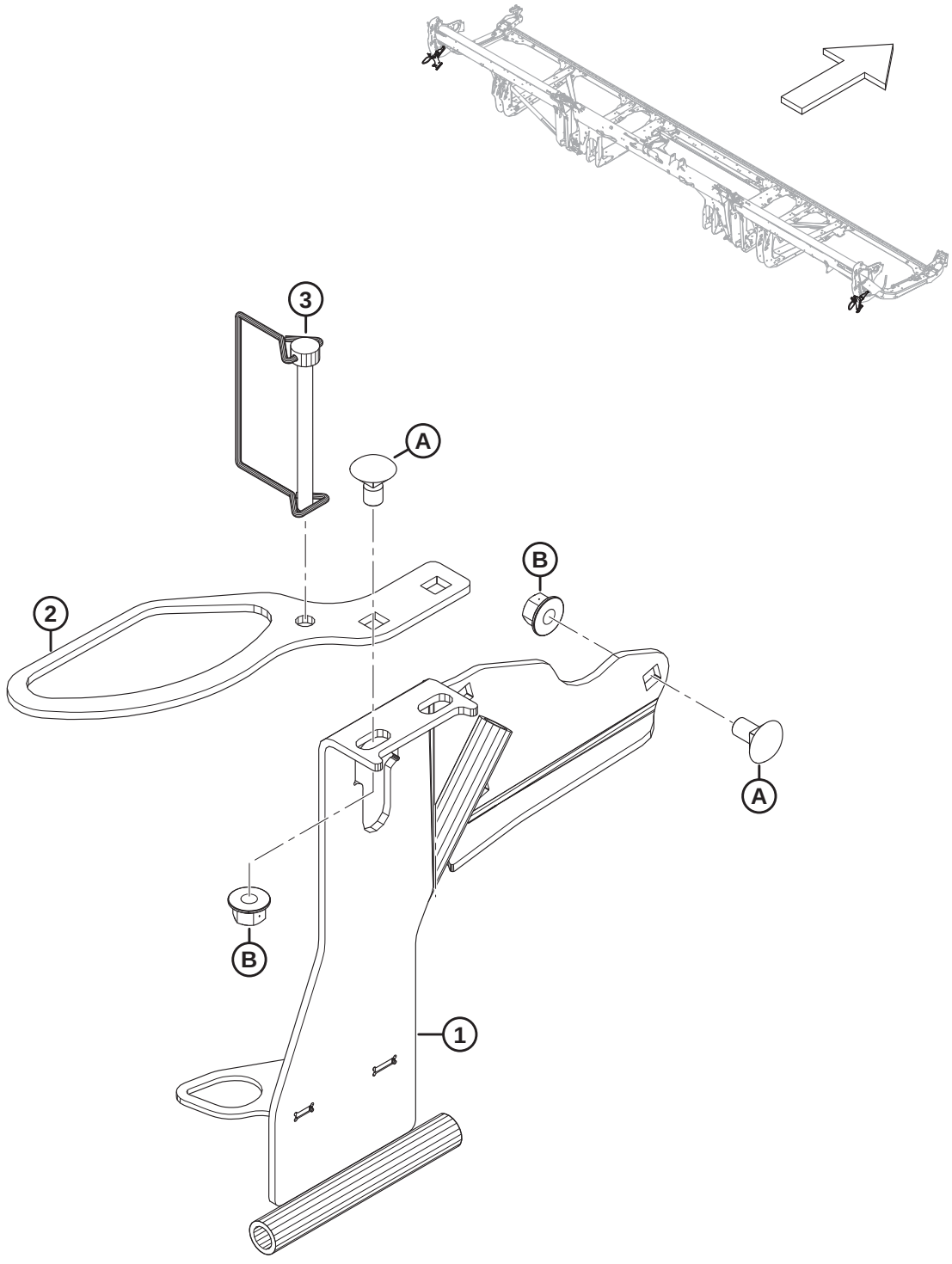

1032910

(OPTION) DIVIDER STORAGE BRACKET

NOTE:

Kits (B-bundle numbers and C-collector numbers) can be purchased from MacDon Whole Goods only.

Ref	Part Number	Description	Qty	Serial Number
	B7030	KIT – DIVIDER STORAGE BRACKET [202]		
1	MAC313566	LH DIVIDER STORAGE – WELDT	1	
	MAC313705	RH DIVIDER STORAGE – WELDT	1	
2	MAC311464	SUPPORT – STORAGE RICE RODS	2	
3	MAC136749	PIN – LYNCH	2	
A	MAC136178	BOLT – RHSN M10 X 1.5 X 20-8.8-AA1J		
B	MAC135799	NUT – HEX FLG CTR LOC M10 X 1.5-10		

202. Kits are available through Whole Goods only.

88 (Option) EasyMove™ – Slow Speed Transport, Base Kit and Stabilizer Wheels

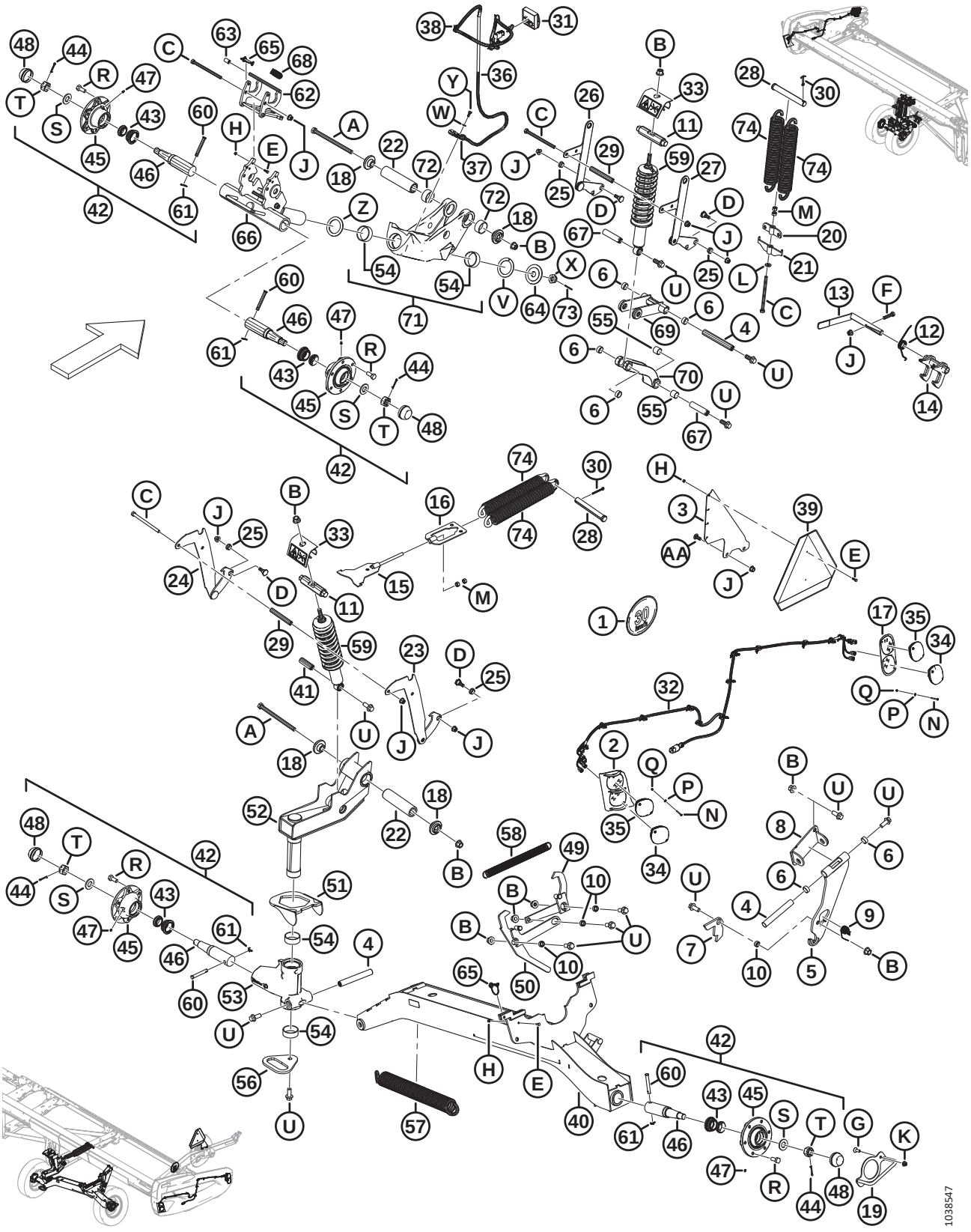

NOTE:

Kits (B-bundle numbers and C-collector numbers) can be purchased from MacDon Whole Goods only.

Ref	Part Number	Description	Qty	Serial Number
	B6288	EASYMOVE™ SLOW SPEED TRANSPORT – STABILIZER WHEELS AND BASE KIT [203]		
1	MAC327561	KIT – DECALS, SIS BRACKET	1	
	MAC193243	DECAL – SIS 30 KM/H, SMALL	1	
	MAC193241	DECAL – SIS, 30 KM/H	1	
	MAC193240	DECAL – SIS 20 MILE/H, SMALL	1	
	MAC193242	DECAL – SIS 20 MILE/H	1	
2	MAC327429	LIGHT BEZEL – WELDT, LH [204]	1	
	MAC327179	LIGHT BEZEL – WELDT, RH [204]	1	
3	MAC327428	LUG	1	
4	MAC316794	PIN	3	
5	MAC316358	SUPPORT – ASSY [205]	1	
6	MAC210690	BUSHING – COMPOSITE	6	
7	MAC303961	PLATE – LATCH	1	
8	MAC327704	PIVOT – WELDT	1	
9	MAC303379	SPRING – TORSION	1	
10	MAC252958	SPACER	4	
11	MAC316284	PIN	2	
12	MAC316119	SPRING – TORSION	1	
13	MAC316118	HANDLE – ASSY	1	
	MAC287701	GRIP – HANDLE	1	
14	MAC316110	LATCH – WELDT	1	
15	MAC316096	SUPPORT – WELDT	1	
16	MAC316095	SUPPORT – WELDT	1	
17	MAC313406	BEZEL – LH FRONT [204]	1	
	MAC313425	BEZEL – RH FRONT [204]	1	
18	MAC303839	CASTING – PLATE	4	

203. Kits are available through Whole Goods only.
204. The bezels are mounted onto the header endshields with hardware N, P, and Q.
205. The support assembly includes support (NSS) and two composite bushings (MAC210690).

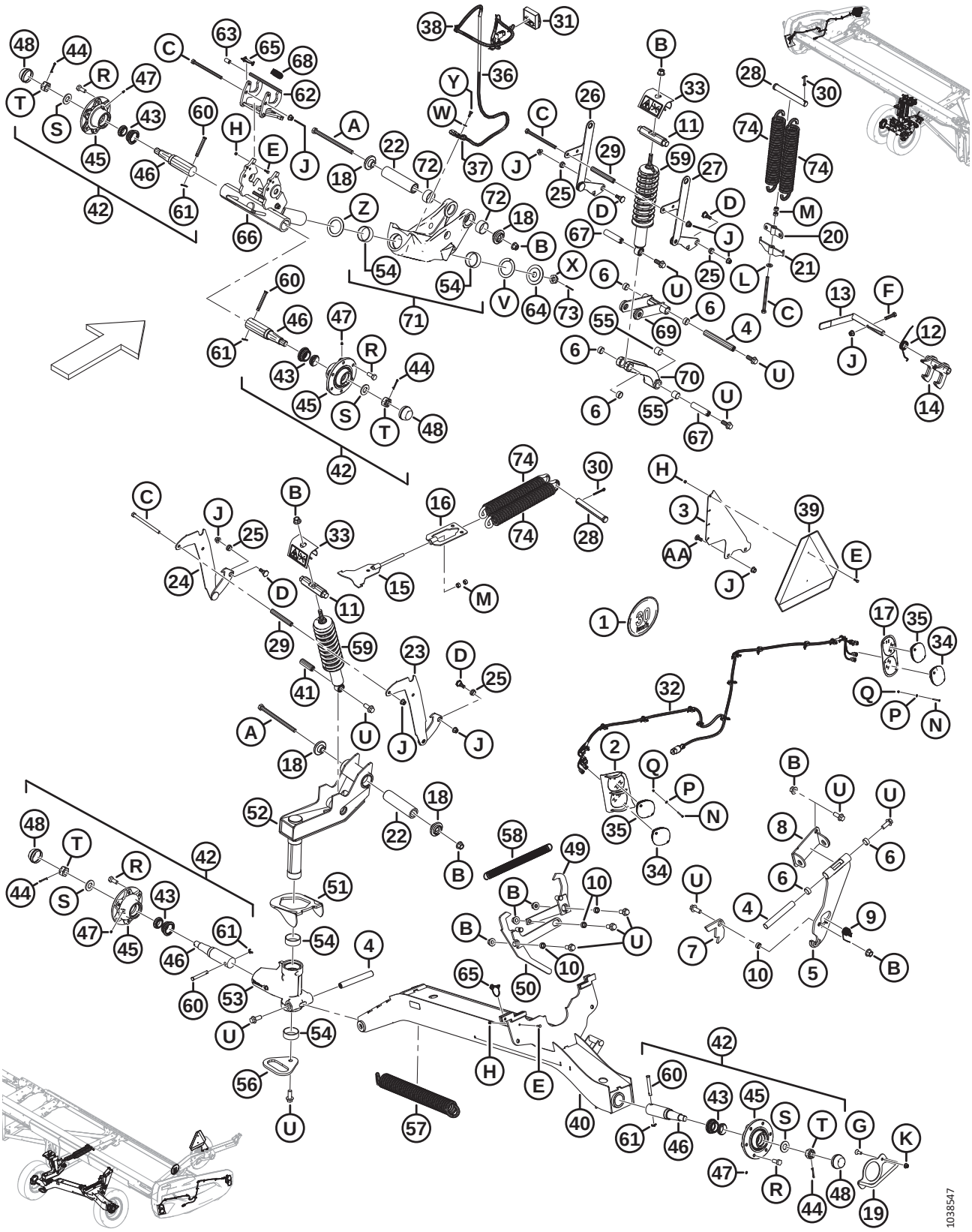
1038547

Ref	Part Number	Description	Qty	Serial Number
19	MAC303766	HANDLE – WELDT	1	
20	MAC303693	SPRING TENSION SUPPORT – WELDT	1	
21	MAC303691	SPRING ADJUST SUPPORT – WELDT	1	
22	MAC303525	PIN – PIVOT	2	
23	MAC327756	SUPPORT, HEIGHT ADJUST – WELDT, RH	1	
24	MAC327755	SUPPORT, HEIGHT ADJUST – WELDT, LH	1	
25	MAC303492	BUSHING – COMPOSITE	4	
26	MAC303491	SUPPORT, HEIGHT ADJUST – WELDT	1	
27	MAC303486	SUPPORT, HEIGHT ADJUST – WELDT	1	
28	MAC292692	PIN – CLEVIS	2	
29	MAC210985	SPACER	2	
30	MAC18609	PIN – COTTER 1/4 DIA X 2 ZP	2	
31	MAC327255	MODULE – TRANSPORT LED W/ TAPE	1	
32	MAC323049	HARNESS – TRANSPORT EXT LTS	2	
33	MAC327089	ANTI PRY – ASSY	2	
34	MAC316044	LIGHT – RED	2	
35	MAC284215	LIGHT – AMBER	4	
36	MAC284548	HARNESS – TRANSPORT EXT LEG	1	
37	MAC135716	CLAMP – INSULATED 5/8 IN.	1	
38	MAC21763	FASTENER – CABLE TIE BLACK	7	
39	MAC21032	SMV SIGN – METAL AND REFLECTOR	1	
40	MAC327786	SUPPORT, AXLE – WELDT	1	
41	MAC316793	PIN	1	
42	MAC316330	HUB – ASSY [206]	4	
43	MAC316851	KIT – WHEEL BEARING [207]	4	
44	MAC18608	PIN – COTTER 3/16 DIA X 1.5 ZP	4	
45	MAC316847	HUB	4	
46	MAC316848	SPINDLE	4	
47	MAC18671	FITTING – LUBE 1/4 - 28 UNF	4	

206. The hub assembly includes cotter pin (MAC18608), lube fitting (MAC18671), six wheel bolts (MAC18916), dust cap (MAC30520), hub (MAC316847), spindle (MAC316848), wheel bearing kit (MAC316851), slotted nut (MAC316859), and washer (MAC316860).
207. The kit includes bearings (NSS) and seal (NSS).

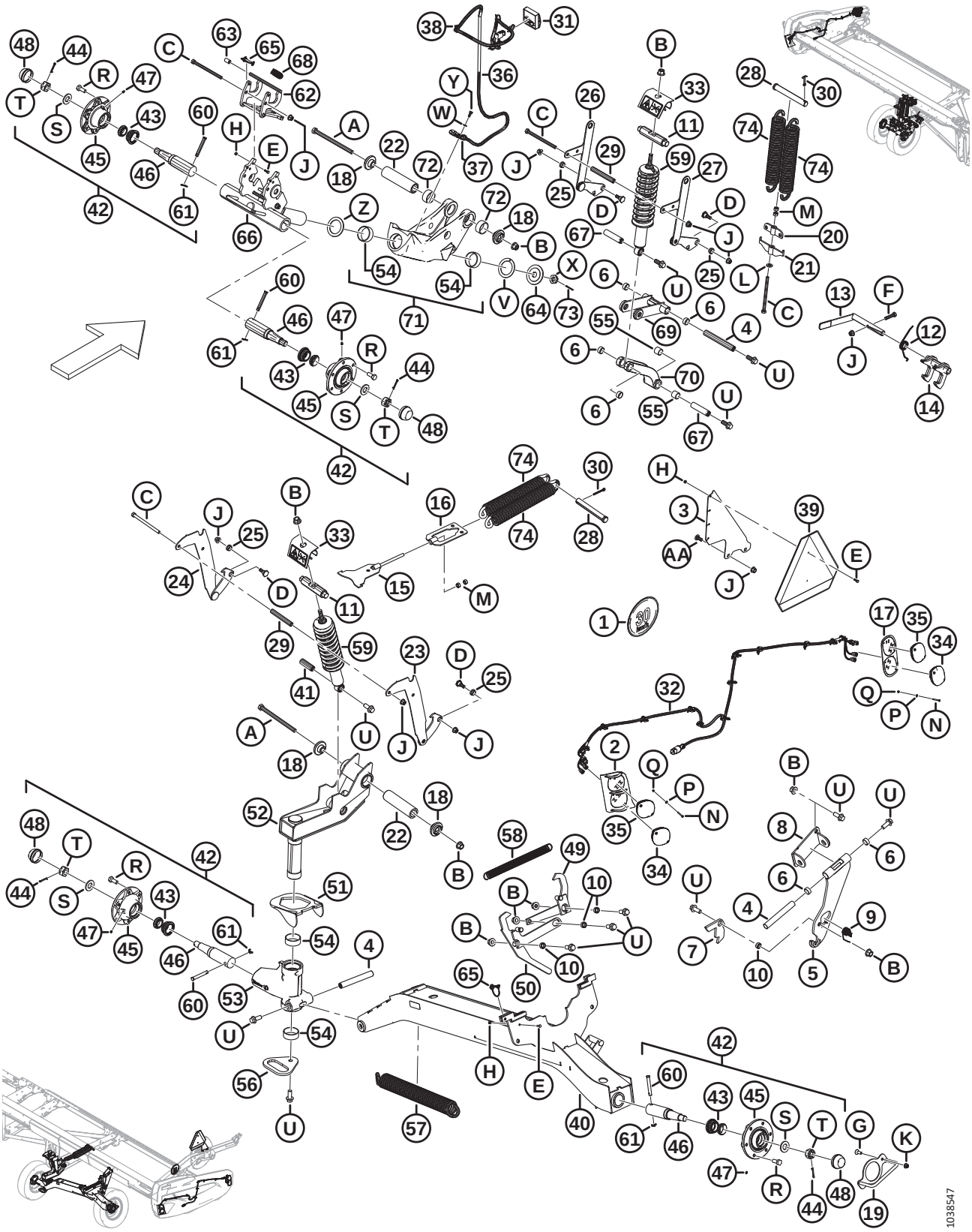
1038547

Ref	Part Number	Description	Qty	Serial Number
48	MAC30520	CAP – DUST	4	
49	MAC327751	ARM – WELDT	1	
50	MAC327749	LEVER – WELDT	1	
51	MAC303832	HOOK – WELDT	1	
52	MAC327672	PIVOT – ASSY	1	
53	MAC303380	SUPPORT, PIVOT – ASSY	1	
54	MAC210661	BUSHING – COMPOSITE	4	
55	MAC133992	BUSHING – COMPOSITE	6	
56	MAC303033	PLATE – HANDLE	1	
57	MAC303021	SPRING – EXTENSION	1	
58	MAC247222	SPRING – EXTENSION	1	
59	MAC210340	DAMPENER – HEADER	2	
60	MAC101007	PIN – CLEVIS	4	
61	MAC18648	PIN – COTTER 3/16 DIA X 1.25 ZP	4	
62	MAC327535	LATCH – ASSY [208]	1	
63	MAC327534	GRIP – HANDLE	1	
64	MAC327745	DISC	1	
65	MAC320205	PIN – LYNCH DIA 5/16 IN. X 1.75 IN. LG W/ TETHER	2	
66	MAC327716	SPINDLE – WELDT	1	
67	MAC316293	PIN	2	
68	MAC303898	SPRING – EXTENSION	1	
69	MAC327738	ARM SUPPORT – ASSY [209]	1	
70	MAC303341	CAST SUPPORT – ASSY [210]	1	
71	MAC303283	PIVOT – ASSY [211]	2	
72	MAC327600	BUSHING – COMPOSITE	4	
73	MAC18607	PIN – COTTER 5/32 DIA X 1.5 ZP	1	
74	MAC144724	SPRING – EXTENSION	4	
	MAC316649	DECAL – HEIGHT SETTING, LH	1	

208. The latch assembly includes latch (NSS) and handle grip (MAC327534).
209. The arm support assembly includes arm support (NSS) and two composite bushings (MAC210690).
210. The support assembly includes support (NSS), two composite bushings (MAC133992), and two composite bushings (MAC210690).
211. The pivot assembly includes pivot (NSS), two composite bushings (MAC210661), and two composite bushings (MAC327600).

(OPTION) EASYMOVE™ – SLOW SPEED TRANSPORT, BASE KIT AND STABILIZER WHEELS

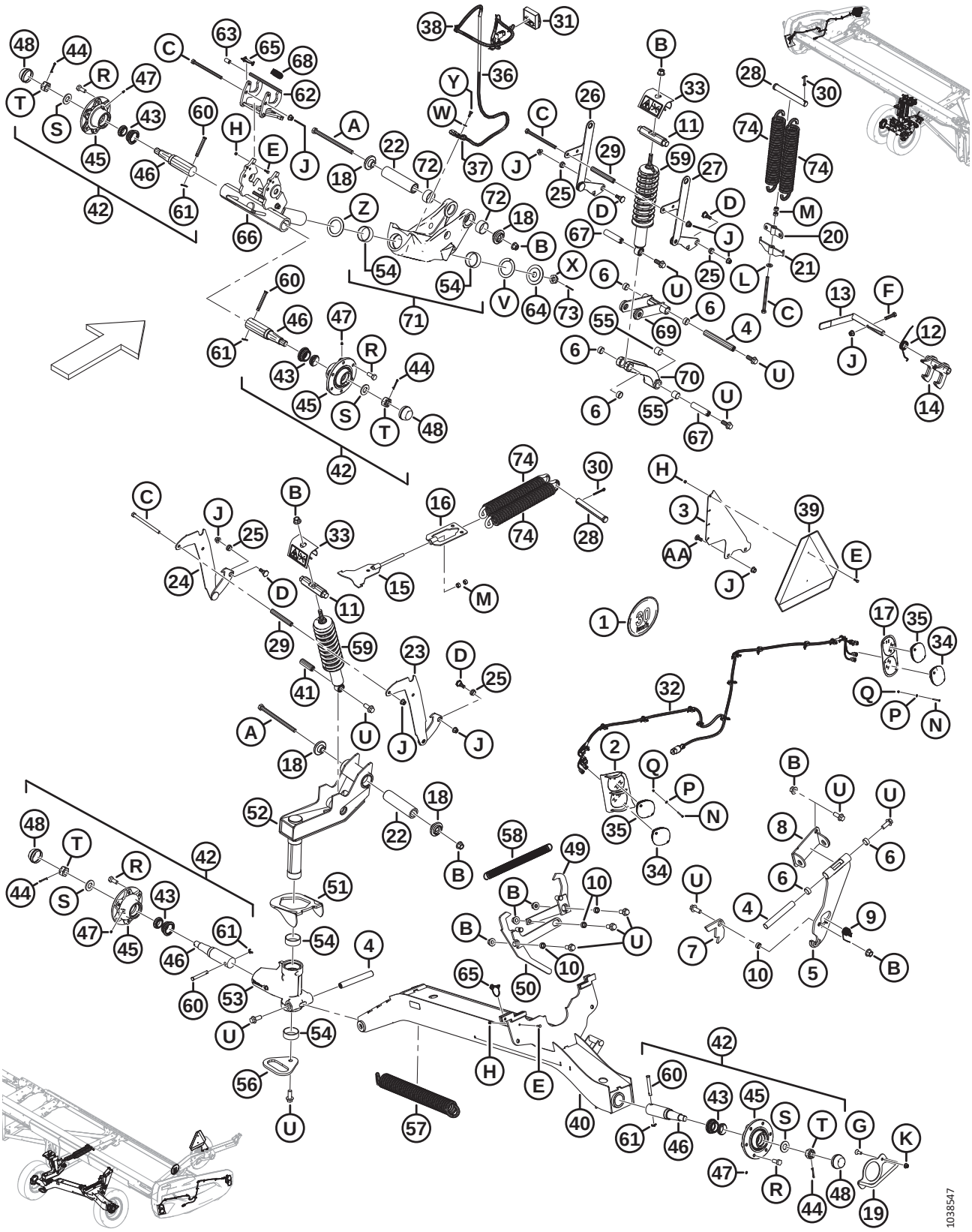

(OPTION) EASYMOVE™ – SLOW SPEED TRANSPORT, BASE KIT AND STABILIZER WHEELS

Ref	Part Number	Description	Qty	Serial Number
	MAC316639	DECAL – HEIGHT SETTING, RH	1	
	MAC327086	DECAL – ENERGY RELEASE	2	
	MAC165524	REFLECTOR – RED	2	
A	MAC320011	BOLT – HEX HD M16 X 2 X 240-10.9-ZINC		
B	MAC136440	NUT – HEX FLG CTR LK M16 X 2-10-AA1J		
C	MAC252272	BOLT – HEX HD TFL M12 X 1.75 X 180-10.9-ZINC		
D	MAC303251	BOLT – 19 MM SHLDR M12 SPCL		
E	MAC184646	BOLT – HEX HD TFL M6 X 1 X 20-8.8-AA1J		
F	MAC152779	BOLT – HEX HD M12 X 1.75 X 55-8.8-AA1J		
G	MAC136857	SCREW – HEX SOC CSK HD TFL M10 X 1.5 X 30-ZINC		
H	MAC136773	NUT – HEX CTR LOC M6 X 1-8-AA1J		
J	MAC136431	NUT – HEX FLG CTR LOC M12 X 1.75-10		
K	MAC135799	NUT – HEX FLG CTR LOC M10 X 1.5-10		
L	MAC135369	WASHER – HARDENED ASTM F436 1/2		
M	MAC135156	NUT – HEX M12 X 1.75-10-AA1J		
N	MAC320154	SCREW – PAN HD DIN 7985 M4 X 0.7 X 35-4.8-ZINC BLACK		
P	MAC18798	WASHER – FLAT SAE 7/32 ID X 7/16 IN OD AA1J		
Q	MAC197320	NUT – HEX NYLOC M4 X 0.7-8-AA1J		
R	MAC18916	BOLT – 90° WHEEL 9/16 NF X 1.75 OL - AA1J		
S	MAC316860	WASHER		
T	MAC316859	NUT – SLOTTED		
U	MAC320060	BOLT – HEX FLG HD TFL M16 X 2 X 40-10.9-ZINC		
V	MAC210918	WASHER – THRUST		
W	MAC184708	WASHER – FLAT M8-200HV-AA1J		
X	MAC136446	NUT – HEX SLTD FINE M24 X 1.5-SPCL-22HA-ZINC		
Y	MAC30715	BOLT – HEX HD TFL M8 X 1.25 X 20-8.8-AA1J		
Z	MAC327710	WASHER – THRUST		
AA	MAC152702	BOLT – RHSN M12 X 1.75 X 30-8.8-AA1J		

89 (Option) EasyMove™ – Slow Speed Transport, Wheels, Tires, and Tow Poles

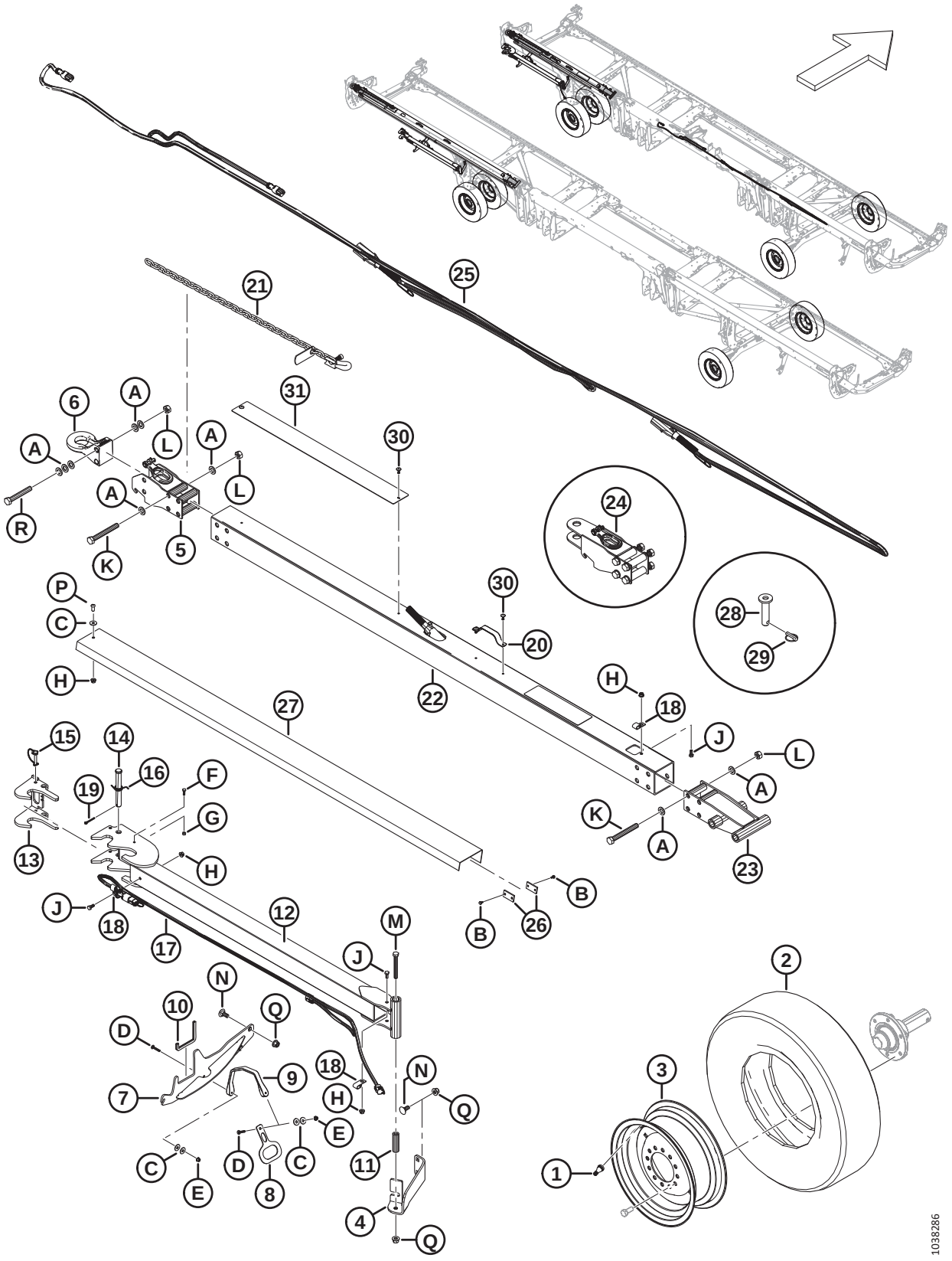

(OPTION) EASYMOVE™ – SLOW SPEED TRANSPORT, WHEELS, TIRES, AND TOW POLES

NOTE:

Kits (B-bundle numbers and C-collector numbers) can be purchased from MacDon Whole Goods only.

Ref	Part Number	Description	Qty	Serial Number
	B6275	EASYMOVE™ SLOW SPEED TRANSPORT – WHEELS AND TIRES [212]		
1	MAC230968	STEM – TIRE VALVE ASSY #TR-416	2	
2	MAC230483	TIRE – ST 225/75 R15 LRE	2	
3	MAC144531	WHEEL – 15 X 6 LB	2	
	MAC327717	DECAL – TIRE PRESSURE	2	
	B7392	EASYMOVE SLOW SPEED TRANSPORT – LONG TOW POLE		
4	MAC327649	ANGLE – SUPPORT	1	
5	MAC327694	HITCH – BASE	1	
6	MAC113566	HITCH – PINTLE	1	
7	MAC327771	WELDMENT – SUPPORT	1	
8	MAC327304	PLATE – HANDLE	1	
9	MAC193187	STRAP – RUBBER	1	
10	MAC141220	SEAL – EDGE TRIM	1	
11	MAC327294	TUBE	1	
12	MAC327740	HITCH, EXTENSION – WELDT	1	
13	MAC327739	LATCH – WELDT	1	
14	MAC320213	PIN – CLEVIS	1	
15	MAC320205	PIN – LYNCH DIA 5/16 IN. X 1.75 IN. LG W/ TETHER	1	
16	MAC303169	SPRING – TORSION	1	
17	MAC284549	HARNESS – TRANSPORT EXT HITCH	1	
18	MAC39272	CLIP – INSULATED	3	
19	MAC18608	PIN – COTTER 3/16 DIA X 1.5 ZP	1	
20	MAC327563	HANDLE	2	
21	MAC327532	CHAIN – SAFETY	1	
22	MAC327696	TUBE – HITCH, LONG	1	
23	MAC327692	HITCH, END – WELDT	1	

212. Kits are available through Whole Goods only.

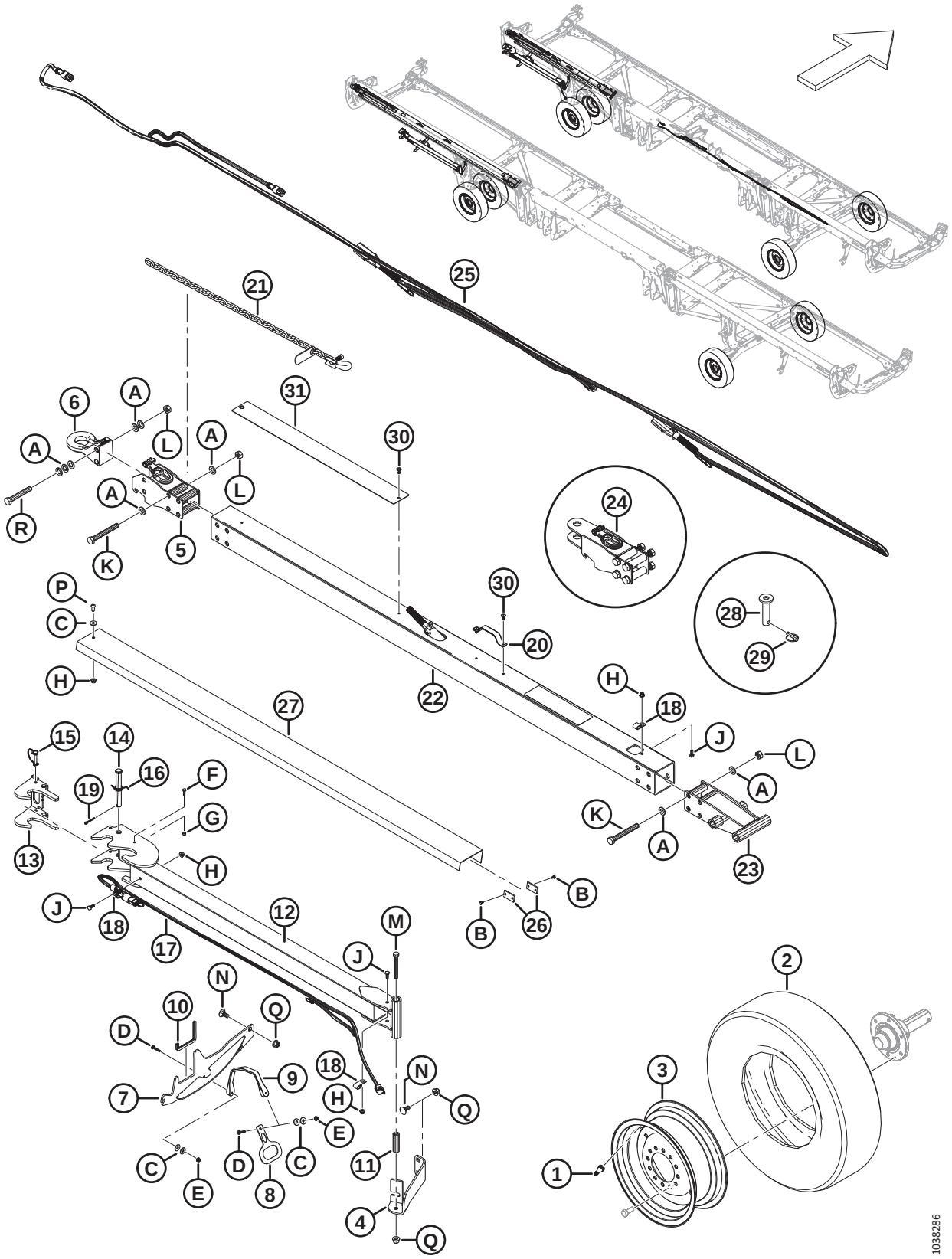
1038286

Ref	Part Number	Description	Qty	Serial Number
24	MAC327664	ASSY – CLEVIS HITCH	1	
25	MAC284550	HARNESS – TRANSPORT LIGHTS	1	
26	MAC316904	PLATE	2	
27	MAC327680	SUPPORT – CHANNEL	2	
28	MAC118239	PIN – HITCH	1	
29	MAC113561	PIN – LYNCH	1	
30	MAC320039	RIVET – POP 4.8 MM X 27.2 MM	6	
31	MAC327659	PLATE – WEAR	1	
	MAC327588	DECAL – HITCH DAMAGE HAZARD	1	
A	MAC184717	WASHER – FLAT REG M16-200HV-AA1J		
B	MAC42292	SCREW – TPG HEX WSH HD #10 X 1/2-GR5-AA1T		
C	MAC184709	WASHER – FLAT LARGE M8-200HV		
D	MAC184643	BOLT – RHSSN M6 X 1.0 X 35-8.8-AA1J		
E	MAC152668	NUT – HEX FLG CTR LOC M6 X 1-8		
F	MAC184646	BOLT – HEX HD TFL M6 X 1 X 20-8.8-AA1J		
G	MAC136773	NUT – HEX CTR LOC M6 X 1-8-AA1J		
H	MAC135337	NUT – HEX FLG CTR LK M8 X 1.25-8-AA1J		
J	MAC30715	BOLT – HEX HD TFL M8 X 1.25 X 20-8.8-AA1J		
K	MAC320219	BOLT – HEX HD M16 X 2 X 130-12.9-ZINC		
L	MAC320208	NUT – HEX TOP LOCK M16 X 2-12-ZINC		
M	MAC184672	BOLT – HEX HD M12 X 1.75 X 100-10.9-AA1J		
N	MAC184667	BOLT – RHSN M12 X 1.75 X 30-8.8-ZINC		
P	MAC320176	SCREW – HEX SOC BTN HD M8 X 1.25 X 20-10.9-AA1J		
Q	MAC136431	NUT – HEX FLG CTR LOC M12 X 1.75-10		
R	MAC184679	BOLT – HEX HD M16 X 2 X 110-10.9-AA1J		

90 (Option) Floating Crop Dividers

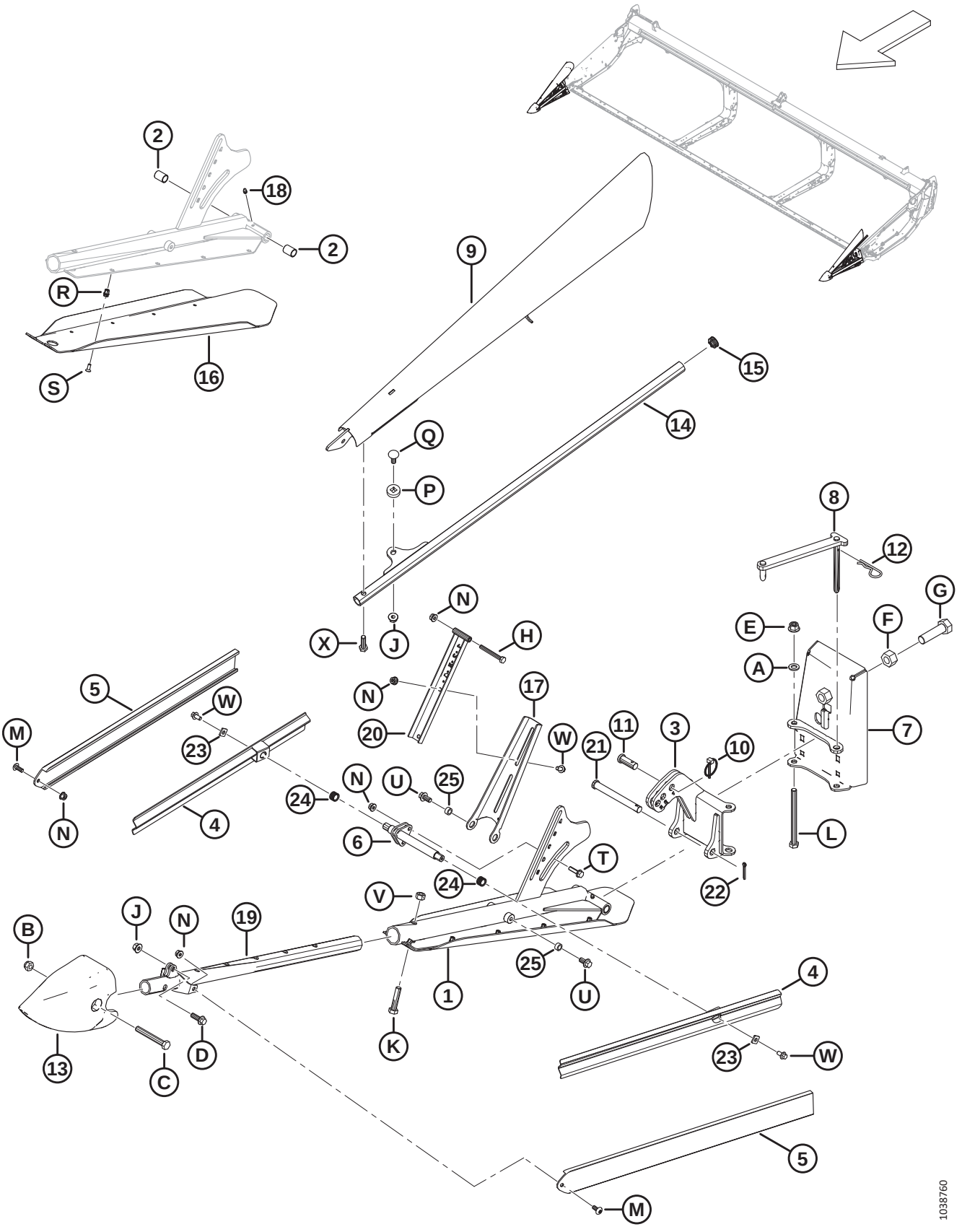

(OPTION) FLOATING CROP DIVIDERS

NOTE:

Kits (B-bundle numbers and C-collector numbers) can be purchased from MacDon Whole Goods only.

Ref	Part Number	Description	Qty	Serial Number
	B7346	KIT – FLOATING END DIVIDERS [213]		
1	MAC360072	ASSY – LH SHOE SUPPORT [214]	1	
	MAC360114	ASSY – RH SHOE SUPPORT [215]	1	
2	MAC258391	BUSHING	4	
3	MAC360079	HINGE WELDT – LH	1	
	MAC360119	HINGE WELDT – RH	1	
4	MAC360077	RAIL - DEFLECTOR WELDT	4	
5	MAC360122	DEFLECTOR – EXTRUDED	4	
6	MAC360106	WELDT – SIDE SUPPORT	2	
7	MAC360069	REAR PLATE WELDT – LH	1	
	MAC360134	REAR PLATE WELDT – RH	1	
8	MAC360004	LINK WELDT – LH	1	
	MAC360168	LINK WELDT – RH	1	
9	MAC360095	DEFLECTOR WELDT – LH	1	
	MAC360081	DEFLECTOR WELDT – RH	1	
10	MAC102264	PIN – LYNCH 3/16 X 1 9/16 IN.	2	
11	MAC18619	PIN – CLEVIS	2	
12	MAC13125	PIN – HAIR	2	
13	MAC313461	CONE – DIVIDER	2	
14	MAC360103	TUBE – WELDMENT	2	
15	MAC335301	PLUG – PLASTIC, SNAP-IN	2	
16	MAC340212	SHOE – LH	1	
	MAC340210	SHOE – RH	1	
17	MAC360110	SUPPORT – LH TOP DEFLECTOR	1	
	MAC360120	SUPPORT – RH TOP DEFLECTOR	1	
18	MAC18671	FTITTING - LUBE 1/4-28 UNF	2	

213. Kits are available through Whole Goods only.
214. The assembly includes LH support weldment (NSS), LH shoe (MAC340212), grease fitting (MAC18671), two bushings (MAC258391), ten screws (MAC320220), and ten rivnuts (MAC320404).
215. The assembly includes RH support weldment (NSS), RH shoe (MAC340210), grease fitting (MAC18671), two bushings (MAC258391), ten screws (MAC320220), and ten rivnuts (MAC320404).

(OPTION) FLOATING CROP DIVIDERS

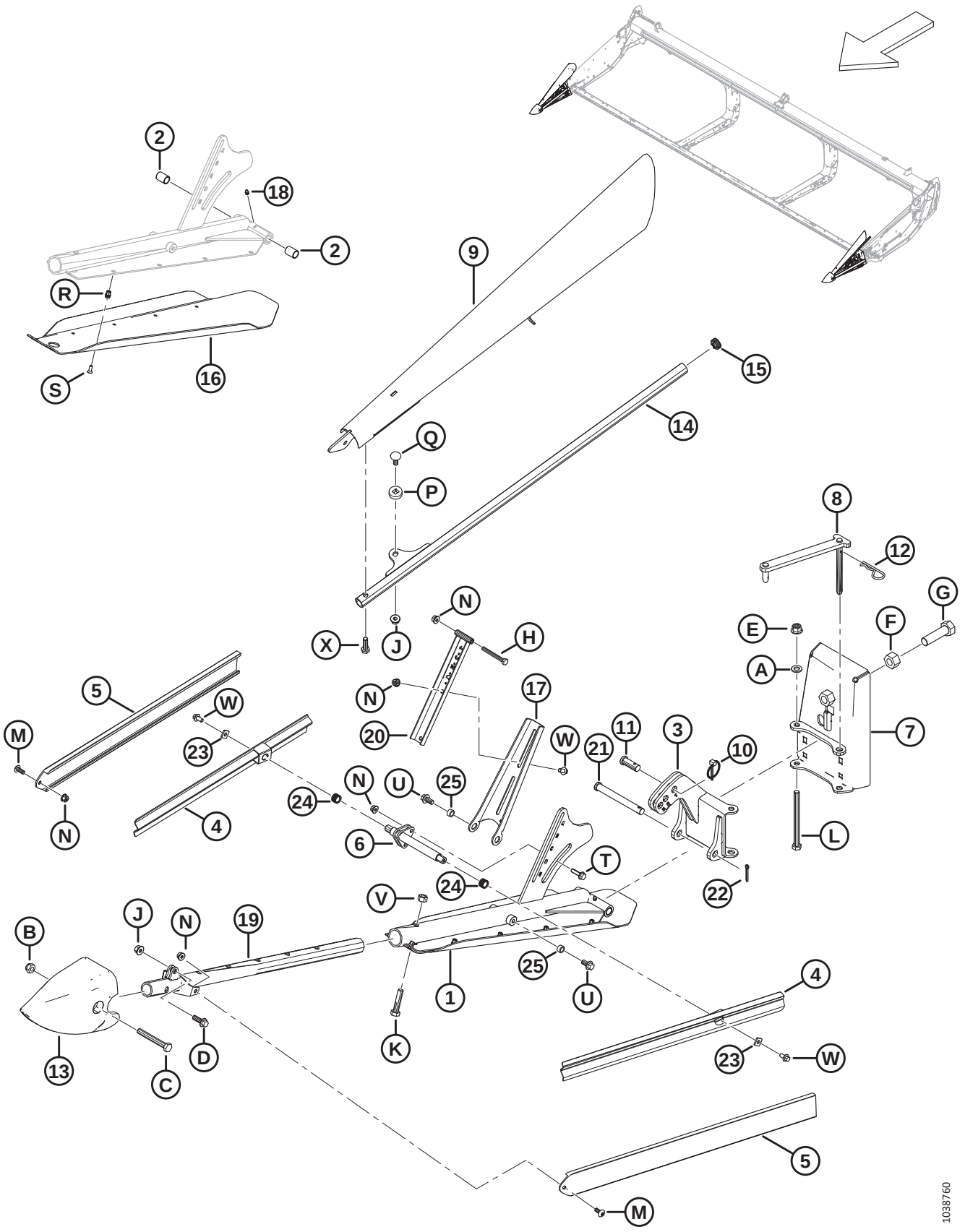

(OPTION) FLOATING CROP DIVIDERS

Ref	Part Number	Description	Qty	Serial Number
19	MAC360076	SUPPORT WELDT – FRONT	2	
20	MAC360108	DEFLECTOR SUPPORT	2	
21	MAC49378	PIN – CLEVIS	2	
22	MAC18648	PIN – COTTER3/16 DIA X 1.25 ZP	2	
23	MAC233841	SUPPORT - DEFLECTOR	4	
24	MAC26429	SPRING – COMPRESSION	4	
25	MAC19542	SPACER	4	
A	MAC184714	WASHER – FLAT REG M12-300HV		
B	MAC184695	NUT – HEX NYLOC M12 X 1.75-8-AA1J		
C	MAC184673	BOLT – HEX HD M12 X 1.75 X 90-10.9-AA1J		
D	MAC184665	BOLT – HEX FLG HD M10 X 1.5 X 30-10.9-AA1J		
E	MAC136431	NUT – HEX FLG CTR LOC M12 X 1.75-10		
F	MAC136342	NUT – HEX FINE M20 X 1.5 X 10-AA3L		
G	MAC136339	BOLT – HEX HD FINE TFL M20 X 1.5 X 70 X 8.8-ZINC		
H	MAC184656	BOLT – HEX HD M8 X 1.25 X 70-8.8-AA1J		
J	MAC135799	NUT – HEX FLG CTR LOC M10 X 1.5-10		
K	MAC152779	BOLT – HEX HD M12 X 1.75 X 55-8.8-AA1J		
L	MAC135696	BOLT – HEX HD M12 X 1.75 X 150-8.8-AA1J		
M	MAC320190	SCREW – TORX TRUSS HD M8 X 1.25 X 20-SPCL-8.8-ZINC		
N	MAC135337	NUT – HEX FLG CTR LK M8 X 1.25-8-AA1J		
P	MAC360105	WASHER – SPECIAL		
Q	MAC184662	BOLT – RHSN TFL M10 X 1.5 X 30-8.8-AA1J		
R	MAC320404	RIVNUT – M6 X 1.0 HEX 1.0-3.5		
S	MAC320220	SCREW – TORX CSK HD TFL M6 X 1 X 16-SPCL-8.8-ZINC		
T	MAC252655	BOLT-HEX FLG HD TFL M8 X 1.25 X 30-8.8-AA1J		
U	MAC152655	BOLT – HEX FLG HD M10 X 1.5 X 20-8.8-AA1J		
V	MAC136759	NUT – HEX CTR LOC M12 X 1.75-8-AA1J		
W	MAC136485	BOLT – HEX FLG HD TFL M8 X 1.25 X 16-8.8-AA1J		
X	MAC135319	BOLT – HEX HD M10 X 1.5 X 40-8.8-AA1J		

91 (Option) Four-Point Guard Kits, Single Knife

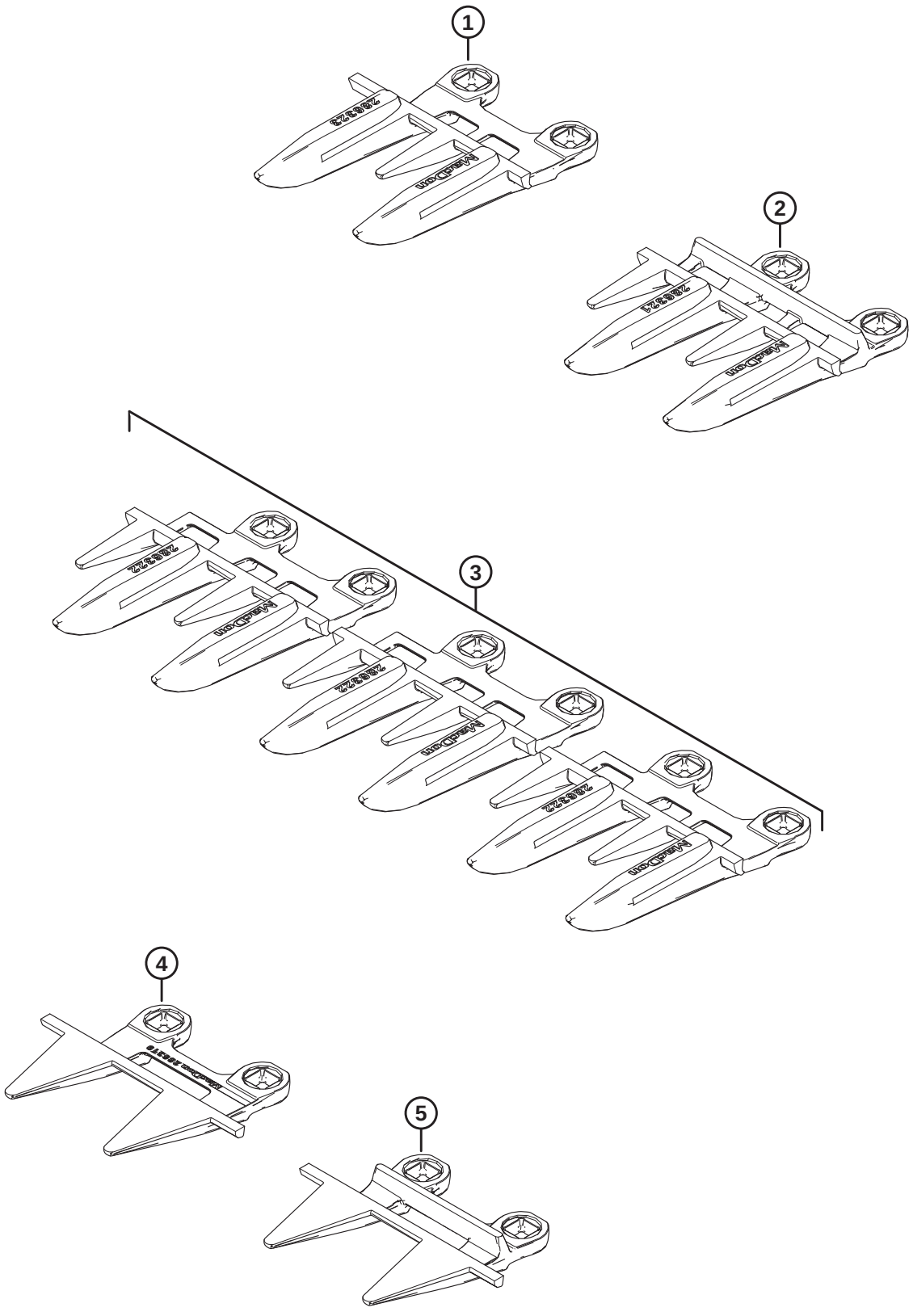

1039619

(OPTION) FOUR-POINT GUARD KITS, SINGLE KNIFE

Ref	Part Number	Description	Qty	Serial Number
	MAC286690	KIT – 4 POINT GUARDS 25 FT SK		
	MAC286691	KIT – 4 POINT GUARDS 30 FT SK		
	MAC286692	KIT – 4 POINT GUARDS 35 FT SK		
1	MAC286323	KNIFE GUARD – 4-POINT SPECIAL [216]	1	
2	MAC286321	KNIFE GUARD – 4-POINT [217]		
3	MAC286322	KNIFE GUARD – 4-POINT END [218]	3	
4	MAC286319	KNIFE GUARD – PLUGFREE END [218]	1	
5	MAC286318	KNIFE GUARD – PLUGFREE [216]	1	

216. Used at the right end of the header.
217. Quantities: D225 = 44, D230 = 54, D235 = 64.
218. Used at the drive end of the header.

92 (Option) Four-Point Guard Kits, Double Knife

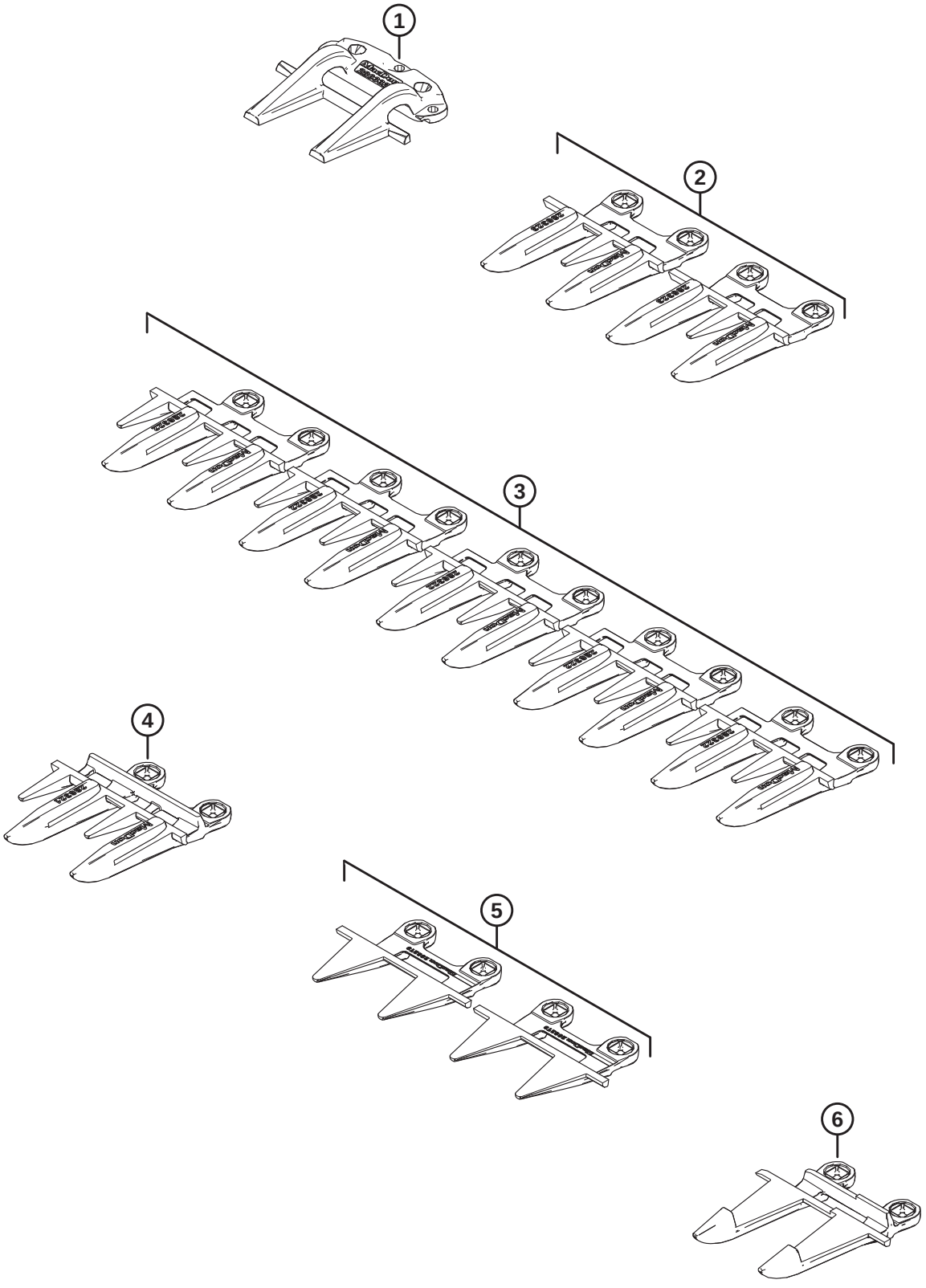

(OPTION) FOUR-POINT GUARD KITS, DOUBLE KNIFE

Ref	Part Number	Description	Qty	Serial Number
	MAC286687	KIT – 4 POINT GUARDS 41 FT DK		
	MAC286688	KIT – 4 POINT GUARDS 45 FT DK		
1	MAC286332	HOLD-DOWN – POINTED CENTER [219]	1	
2	MAC286323	KNIFE GUARD – 4-POINT SPECIAL [220]	2	
3	MAC286322	KNIFE GUARD – 4-POINT END [221]	5	
4	MAC286321	KNIFE GUARD – 4-POINT [222]		
5	MAC286319	KNIFE GUARD – PLUGFREE END [223]	2	
6	MAC286317	KNIFE GUARD – POINTED CENTER [219]	1	

219. Used near the center of the header.
220. One 4-point special knife guard is used at the right end of the header, and to the left of the pointed center knife guard and pointed center hold-down.
221. Three 4-point end knife guards are used at the drive end of the header, and two 4-point end knife guards are used at the right end of the header.
222. Quantities: D240 = 70, D245 = 80.
223. One PlugFree end knife guard is used at each end of the header.

93 (Option) High Wear Skid Shoes

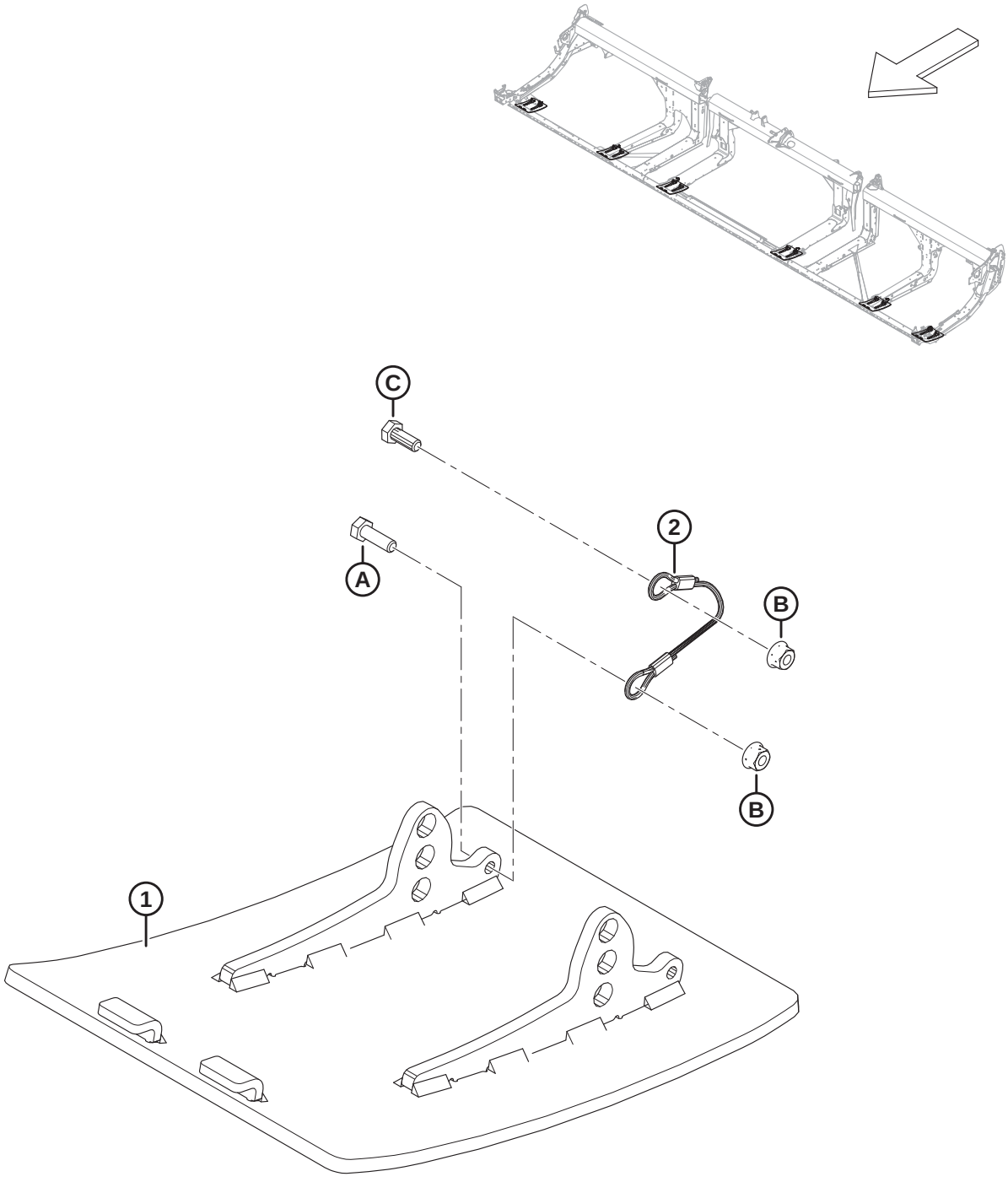

1034768

(OPTION) HIGH WEAR SKID SHOES

NOTE:

Kits (B-bundle numbers and C-collector numbers) can be purchased from MacDon Whole Goods only.

Ref	Part Number	Description	Qty	Serial Number
	B6801	KIT – HIGH WEAR, ABRASION RESISTANT STEEL SKID SHOES [224]		
1	MAC313374	WELDT – HIGH WEAR SHOE	2	
2	MAC312673	CABLE – STOP	2	
A	MAC184652	BOLT – HEX HD TFL M8 X 1.25 X 25-8.8-AA1J		
B	MAC135337	NUT – HEX FLG CTR LK M8 X 1.25-8-AA1J		
C	MAC30715	BOLT – HEX HD TFL		

224. The kit includes two high wear steel skid shoes, two cable stops, hardware, and instructions. Two kits are required for D225 headers. Three kits are required for D230 and larger headers. Kits are available through Whole Goods only.

94 (Option) Reel Tine Tube Conversion Kits – Double Reel, 5 Bat to 6 Bat

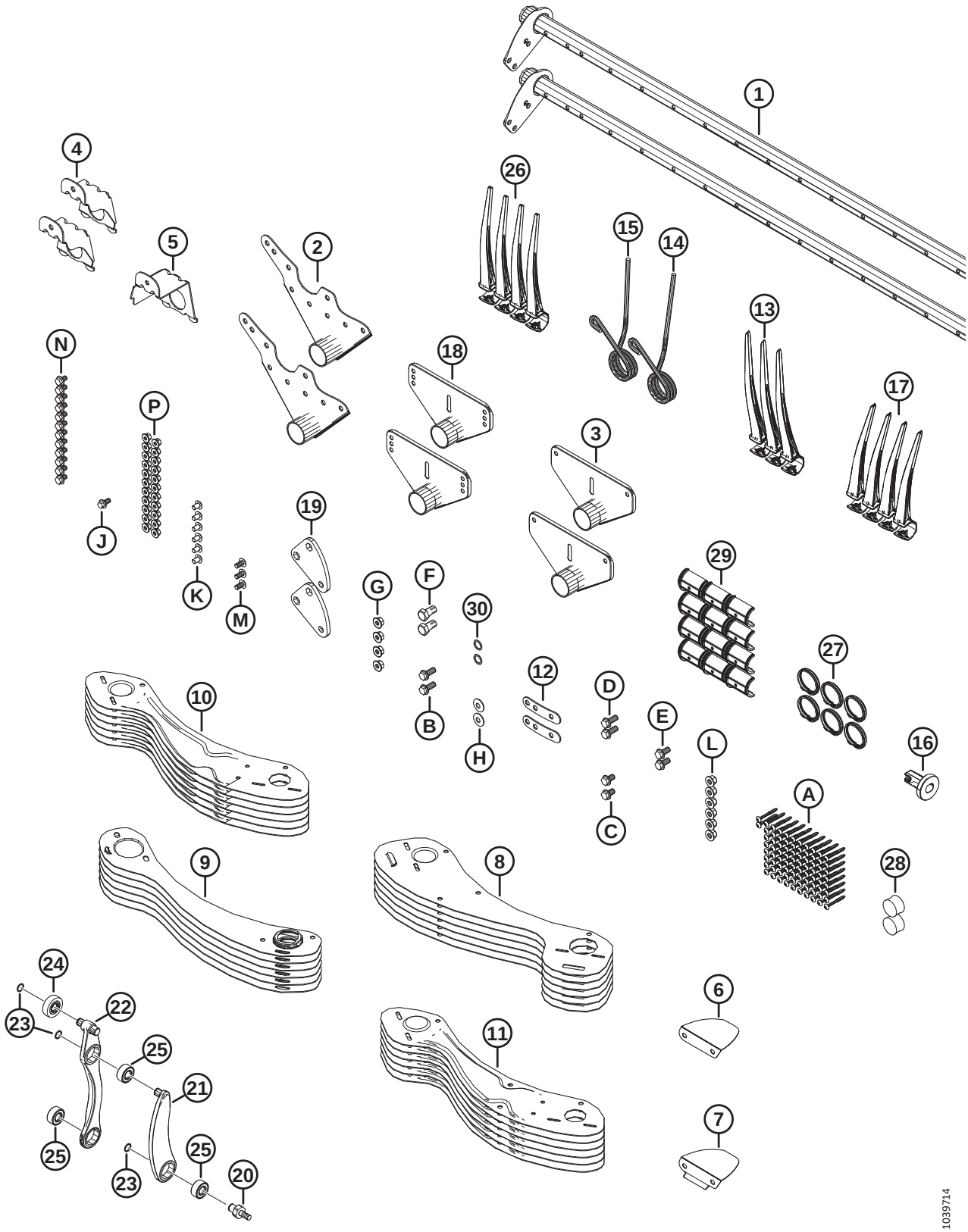

(OPTION) REEL TINE TUBE CONVERSION KITS – DOUBLE REEL, 5 BAT TO 6 BAT

NOTE:

Kits (B-bundle numbers and C-collector numbers) can be purchased from MacDon Whole Goods only.

Ref	Part Number	Description	Qty	Serial Number
	B7359	KIT – 41FT DR 5B TO 6B CONV. [225]		
1	MAC311306	TINE TUBE – 41FT DR WIDE	2	
2	MAC335924	ARM WELDT – CAM END	2	
3	MAC311347	ARM WELDT – TAIL END	2	
4	MAC311964	SUPPORT – WELDT CAM END	2	
5	MAC311965	SUPPORT – WELDT TAIL END	1	
6	MAC311906	DEFLECTOR – CAM INBOARD	1	
7	MAC311729	DEFLECTOR – CAM OUTBOARD	1	
8	MAC273813	SHIELD – 6 BAT LH REEL CAM END	6	
9	MAC311822	SHIELD – 6 BAT RH REEL TAIL END	6	
10	MAC311753	SHIELD – OUTBOARD LH 6 BAT	6	
11	MAC311752	SHIELD – OUTBOARD RH 6 BAT	6	
12	MAC311672	STRAP	2	
13	MAC311524	FINGER – PLASTIC, LH ANGLED, 45 MM (PKG OF 10)	2	
14	MAC311327	FINGER – CAM END BENT	1	
15	MAC311325	FINGER – CAM END OUTBOARD	1	
16	MAC273968	BUSHING – ENDSHIELD	1	
17	MAC311523	FINGER – PLASTIC, RH ANGLED, 52 MM (PKG OF 10)	4	
18	MAC273523	ARM WELDT – MID SPAN	4	
19	MAC228319	ARM – CRANK MACHINING	2	
20	MAC340146	STUD	2	
21	MAC311615	ARM – ASSEMBLY [226]	2	
22	MAC311617	ARM – TINE CONTROL ASSY [227]	2	
23	MAC273536	RING – RETAINING	6	
24	MAC273524	BEARING – CAM FOLLOWER	2	
25	MAC273347	BEARING	6	

225. Kits are available through Whole Goods only.
226. The arm assembly includes one retaining ring (MAC273536) and one bearing (MAC273347).
227. The tine control arm assembly includes two retaining rings (MAC273536), one cam follower bearing (MAC273524), and two bearings (MAC273347).

(OPTION) REEL TINE TUBE CONVERSION KITS – DOUBLE REEL, 5 BAT TO 6 BAT

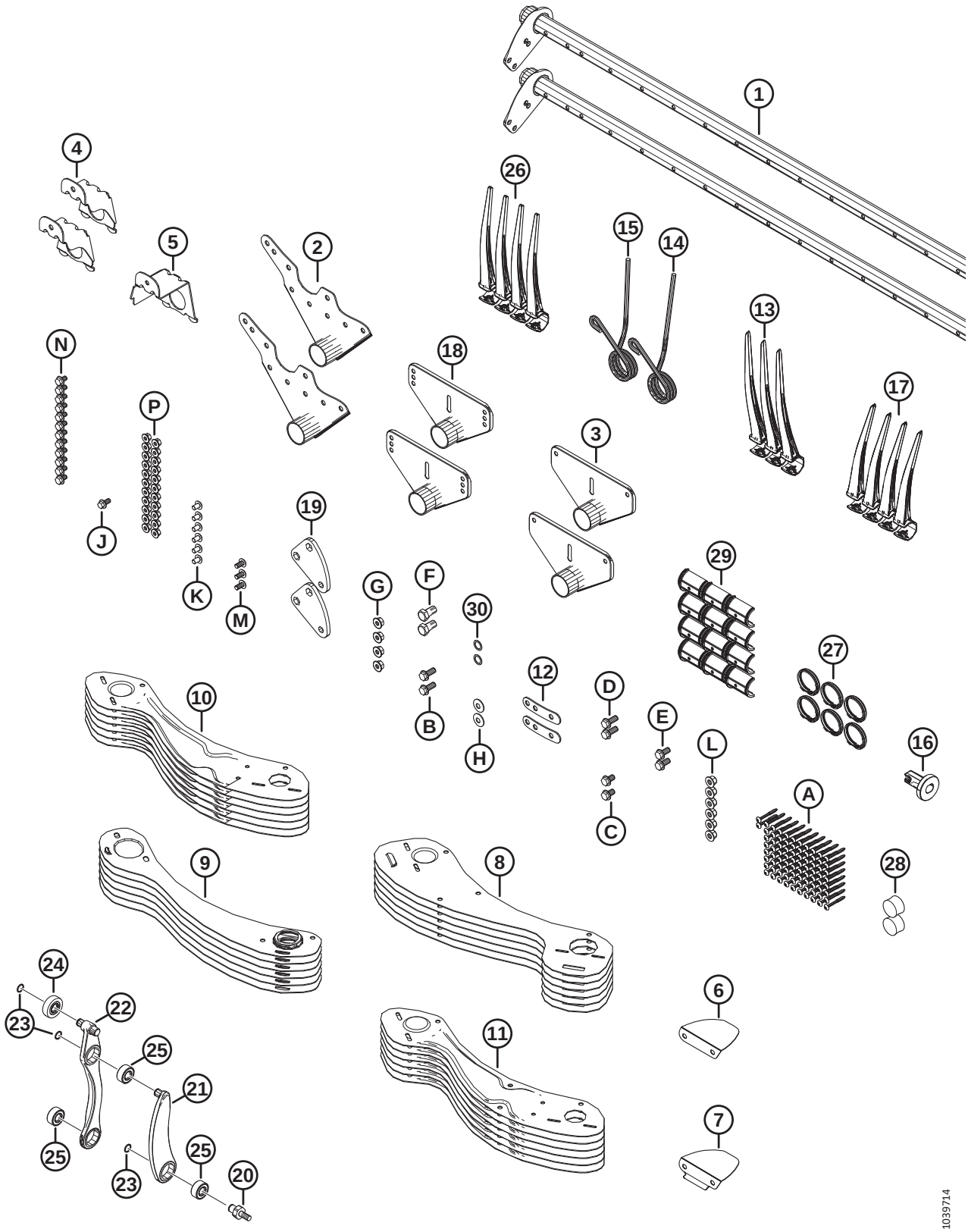

(OPTION) REEL TINE TUBE CONVERSION KITS – DOUBLE REEL, 5 BAT TO 6 BAT

Ref	Part Number	Description	Qty	Serial Number
26	MAC174849	FINGER – PLASTIC HEAVY DUTY (PKG OF 10)	106	
27	MAC220941	CLAMP – TINE TUBE BUSHING-CENTER RIB (BOX OF 5)	8	
28	MAC137980	PLUG – TINE TUBE	3	
29	MAC220939	TINE TUBE BUSHING (BOX OF 25)	16	
30	MAC137529	SHIM – CRANK BEARING	2	
A	MAC252687	SCREW – 48° PLASTITE TWIN HELIX		
B	MAC320192	BOLT – HEX FLG HD M12 X 1.75 X 30-SPCL-8.8-ZINC		
C	MAC320187	BOLT – HEX FLG HD M12 X 1.75 X 20-SPCL-8.8-ZINC		
D	MAC320180	BOLT – HEX FLG HD M12 X 1.75 X 30-SPCL-8.8-ZINC		
E	MAC320175	BOLT – HEX FLG HD TFLM12 X 1.75 X 25-SPCL-8.8-ZINC		
F	MAC228316	BOLT – HEX HD M16 X 1.5 X 30-SPCL-8.8-ZINC		
G	MAC184697	NUT – HEX SER FLG M12 X 1.75-8-AA1J		
H	MAC184597	WASHER – CON SPRING M12-ZINC		
J	MAC152655	BOLT – HEX FLG HD M10 X 1.5 X 20-8.8-AA1J		
K	MAC136640	SCREW – TORX TRUSS HD M10 X 1.5 X 16 X SPCL-8.8-AA1J		
L	MAC136431	NUT – HEX FLG CTR LOC M12 X 1.75-10		
M	MAC136395	SCREW – TORX TRUSS HD M10 X 1.5 X 20 X SPCL-8.8-A3L		
N	MAC136151	BOLT – HEX FLG HD TFL M10 X 1.5 X 16-8.8-AA1J		
P	MAC135799	NUT – HEX FLG CTR LOC M10 X 1.5-10		

95 (Option) Reel Tine Tube Conversion Kits – Double Reel, 6 Bat to 9 Bat

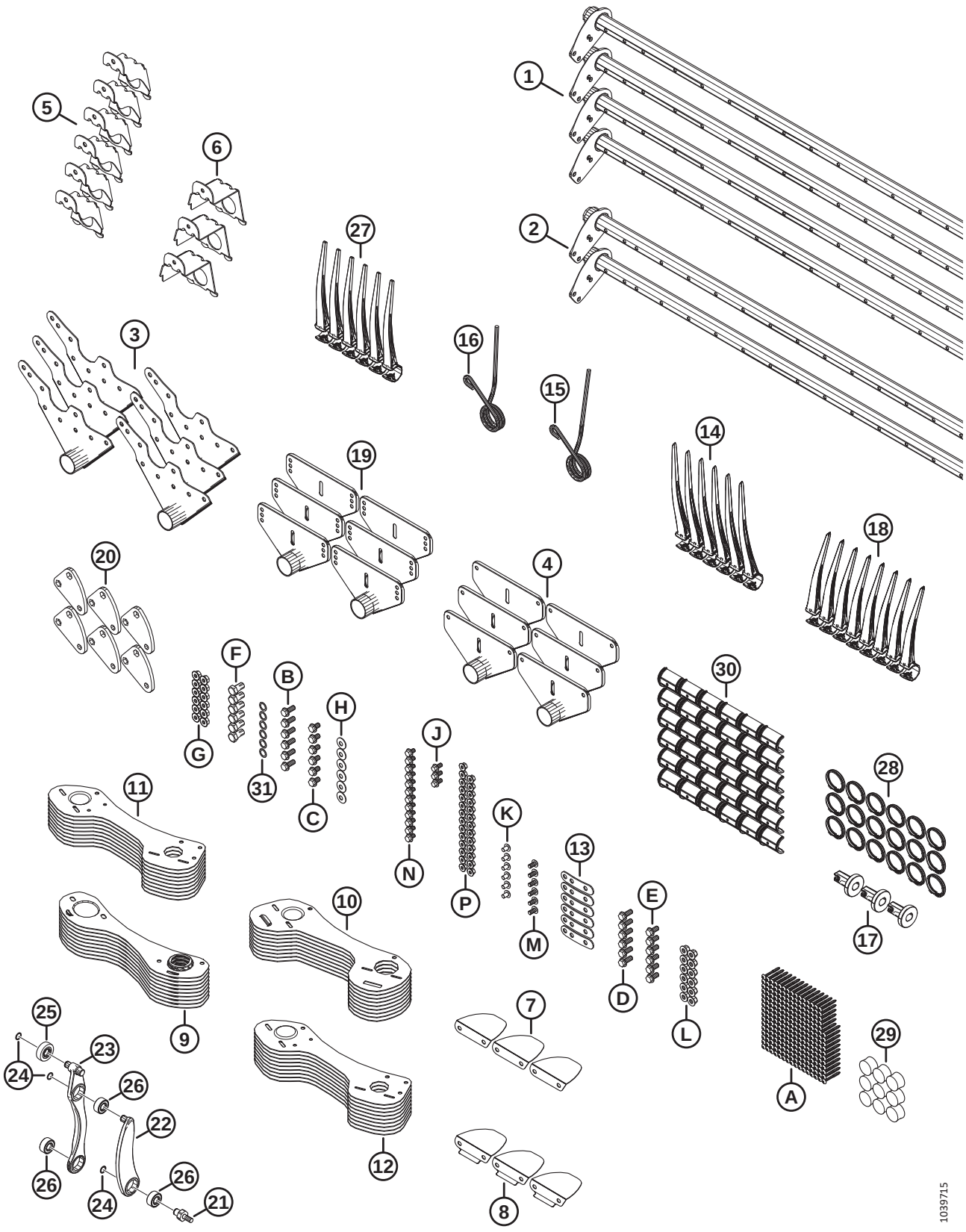

(OPTION) REEL TINE TUBE CONVERSION KITS – DOUBLE REEL, 6 BAT TO 9 BAT

NOTE:

Kits (B-bundle numbers and C-collector numbers) can be purchased from MacDon Whole Goods only.

Ref	Part Number	Description	Qty	Serial Number
	B7362	KIT – 30FT DR 6B TO 9B CONV. [228]		
1	MAC311368	TINE TUBE – 30FT DR NARROW	4	
2	MAC311365	TINE TUBE – 30FT DR WIDE	2	
3	MAC335924	ARM WELDT – CAM END	6	
4	MAC311347	ARM WELDT – TAIL END	6	
5	MAC311964	SUPPORT – WELDT CAM END	6	
6	MAC311965	SUPPORT – WELDT TAIL END	3	
7	MAC311906	DEFLECTOR – CAM INBOARD	3	
8	MAC311729	DEFLECTOR – CAM OUTBOARD	3	
9	MAC311870	SHIELD – 9 BAT RH REEL, TAIL END	9	
10	MAC311868	SHIELD – 9 BAT LH REEL, CAM END	9	
11	MAC311864	SHIELD – OUTBOARD LH 9 BAT	9	
12	MAC311863	SHIELD – OUTBOARD RH 9 BAT	9	
13	MAC311672	STRAP	6	
14	MAC311524	FINGER – PLASTIC, LH ANGLED, 45 MM (PKG OF 10)	6	
15	MAC311327	FINGER – CAM END BENT	3	
16	MAC311325	FINGER – CAM END OUTBOARD	3	
17	MAC273968	BUSHING – ENDSHIELD	3	
18	MAC311523	FINGER – PLASTIC, RH ANGLED, 52 MM (PKG OF 10)	8	
19	MAC273523	ARM WELDT – MID SPAN	6	
20	MAC228319	ARM – CRANK MACHINING	6	
21	MAC340146	STUD	6	
22	MAC311615	ARM – ASSEMBLY [229]	6	
23	MAC311617	ARM – TINE CONTROL ASSY [230]	6	
24	MAC273536	RING – RETAINING	18	
25	MAC273524	BEARING – CAM FOLLOWER	6	

228. Kits are available through Whole Goods only.
229. The arm assembly includes one retaining ring (MAC273536) and one bearing (MAC273347).
230. The tine control arm assembly includes two retaining rings (MAC273536), one cam follower bearing (MAC273524), and two bearings (MAC273347).

(OPTION) REEL TINE TUBE CONVERSION KITS – DOUBLE REEL, 6 BAT TO 9 BAT

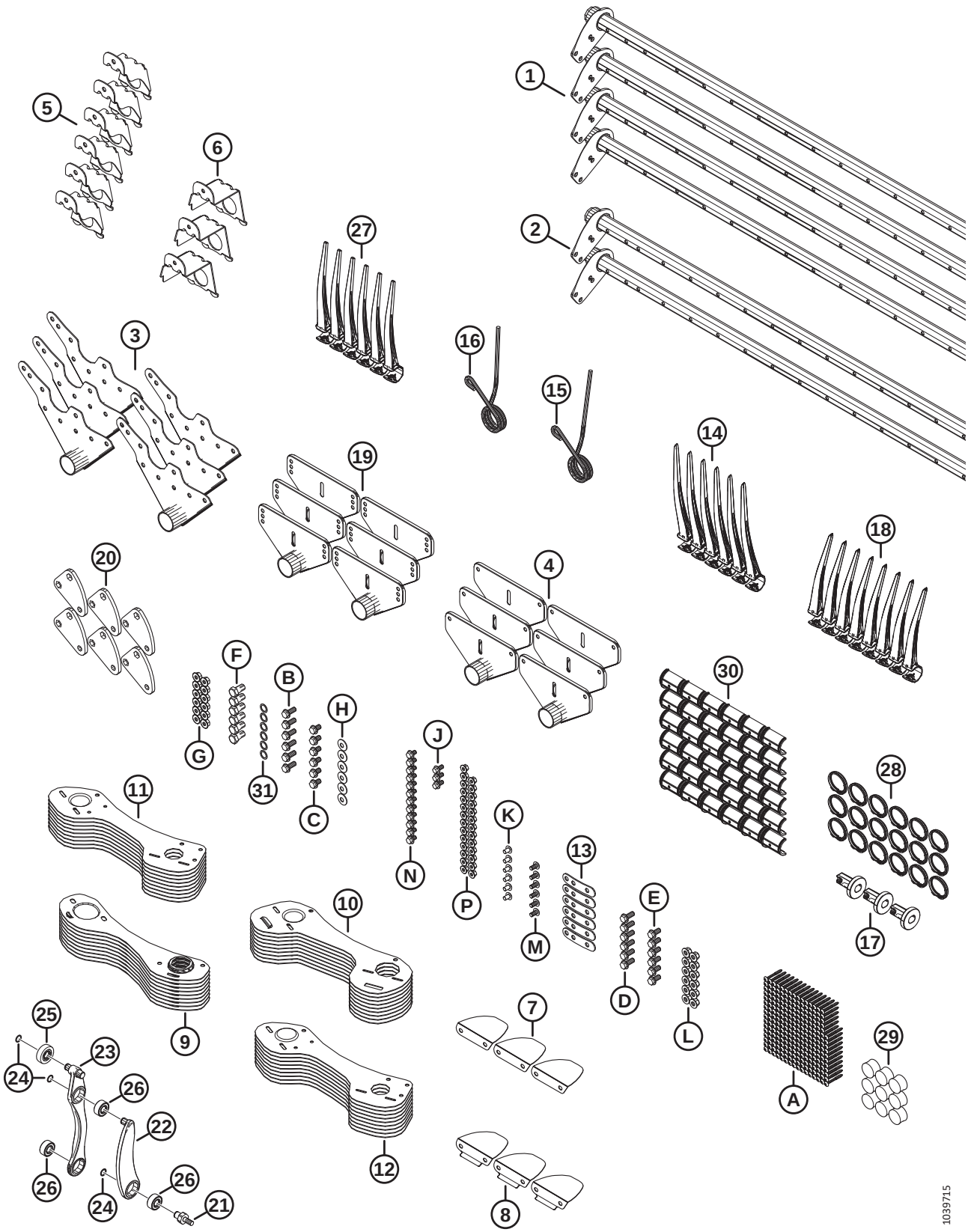

(OPTION) REEL TINE TUBE CONVERSION KITS – DOUBLE REEL, 6 BAT TO 9 BAT

Ref	Part Number	Description	Qty	Serial Number
26	MAC273347	BEARING	18	
27	MAC174849	FINGER – PLASTIC HEAVY DUTY (PKG OF 10)	237	
28	MAC220941	CLAMP – TINE TUBE BUSHING, CENTER RIB (BOX OF 5)	18	
29	MAC137980	PLUG – TINE TUBE	9	
30	MAC220939	TINE TUBE BUSHING (BOX OF 25)	36	
31	MAC137529	SHIM – CRANK BEARING	6	
A	MAC252687	SCREW – 48° PLASTITE TWIN HELIX		
B	MAC320192	BOLT – HEX FLG HD M12 X 1.75 X 30-SPCL-8.8-ZINC		
C	MAC320187	BOLT – HEX FLG HD M12 X 1.75 X 20-SPCL-8.8-ZINC		
D	MAC320180	BOLT – HEX FLG HD M12 X 1.75 X 30-SPCL-8.8-ZINC		
E	MAC320175	BOLT – HEX FLG HD TFL M12 X 1.75 X 25-SPCL-8.8-ZINC		
F	MAC228316	BOLT – HEX HD M16 X 1.5 X 30-SPCL-8.8-ZINC		
G	MAC184697	NUT – HEX SER FLG M12 X 1.75-8-AA1J		
H	MAC184597	WASHER – CON SPRING M12-ZINC		
J	MAC152655	BOLT – HEX FLG HD M10 X 1.5 X 20-8.8-AA1J		
K	MAC136640	SCREW – TORX TRUSS HD M10 X 1.5 X 16 X SPCL-8.8-AA1J		
L	MAC136431	NUT – HEX FLG CTR LOC M12 X 1.75-10		
M	MAC136395	SCREW – TORX TRUSS HD M10 X 1.5 X 20 X SPCL-8.8-A3L		
N	MAC136151	BOLT – HEX FLG HD TFL M10 X 1.5 X 16-8.8-AA1J		
P	MAC135799	NUT – HEX FLG CTR LOC M10 X 1.5-10		

96 (Option) Reel – Two Speed

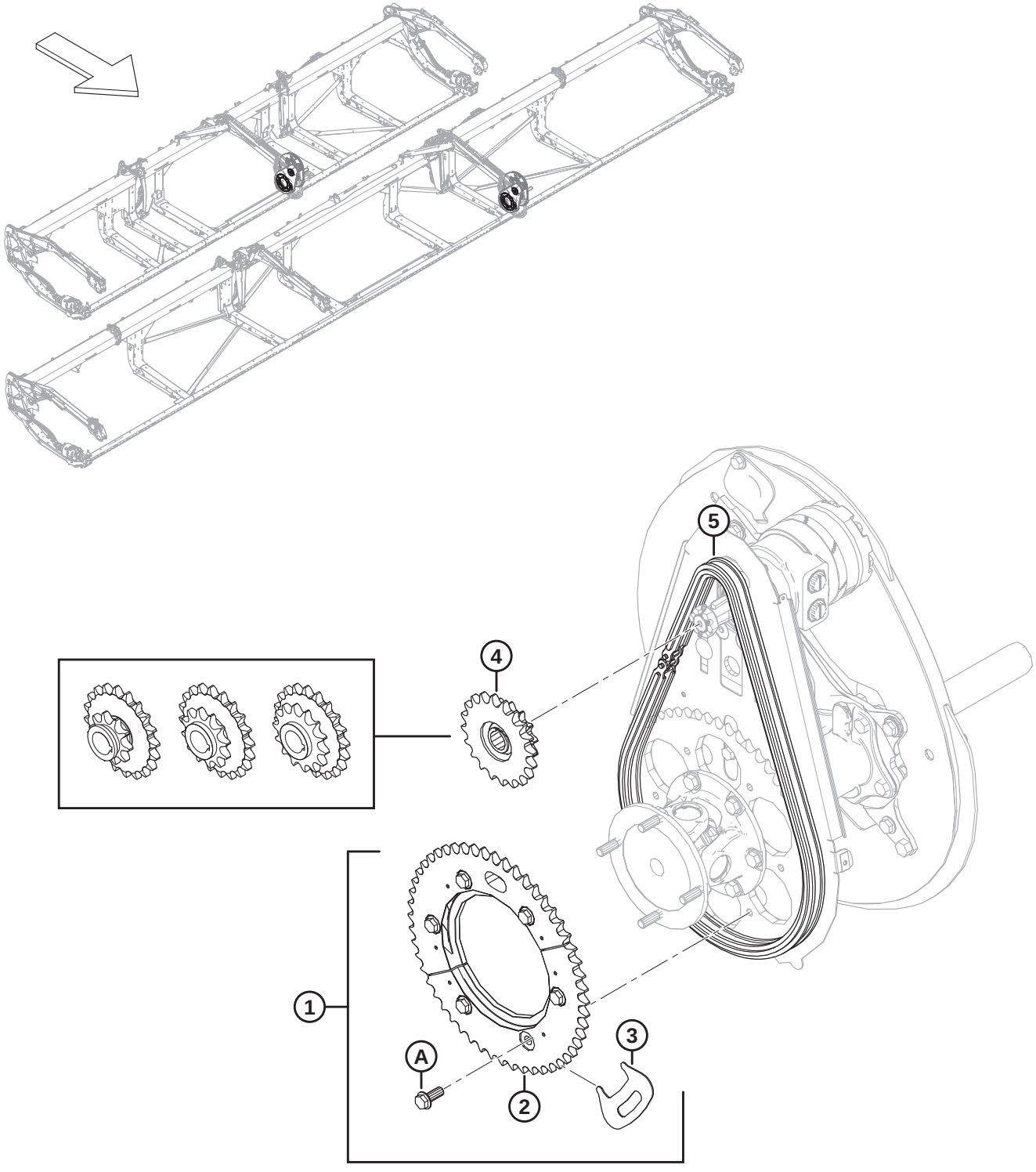

1032643

(OPTION) REEL – TWO SPEED

Ref	Part Number	Description	Qty	Serial Number
1	MAC311882	KIT – 2 SPEED [231]	1	
2	MAC273689	SPROCKET – MACHINED 52 T	1	
3	MAC273594	TOOL – SPROCKET	1	
4	MAC273453	SPROCKET – DUAL 14-20 (CNH, NH) [232]	1	
5	MAC273907	CHAIN – RC 60 ENDLESS 76 LINKS [233]	OPT	
	MAC273963	CHAIN – RC C/W CONNECTOR 76 LINKS [234]	OPT	
A	MAC320192	BOLT – HEX FLG HD M12 X 1.75 X 30-SPCL-8.8-AA1J		

231. The kit includes 52 tooth machined sprocket (MAC273689), sprocket tool (MAC273594), six bolts (MAC320180), and instructions.
232. Case and New Holland, 3000 PSI reel drive circuit pressure.
233. The chain is **NOT** included in kit (MAC311882). A new chain is recommended if the kit is being installed on a unit with hours and it is not a new header. A worn chain will affect the register of the sprocket halves to one another.
234. The chain is **NOT** included in kit (MAC311882). A new chain is recommended if the kit is being installed on a unit with hours and it is not a new header. A worn chain will affect the register of the sprocket halves to one another.

97 (Option) Rice Divider Rods

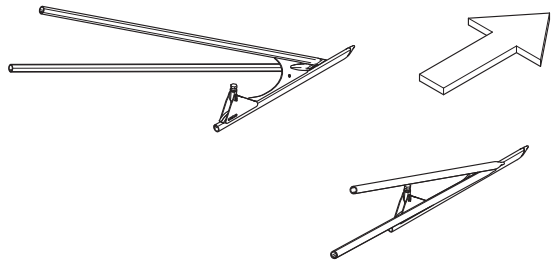

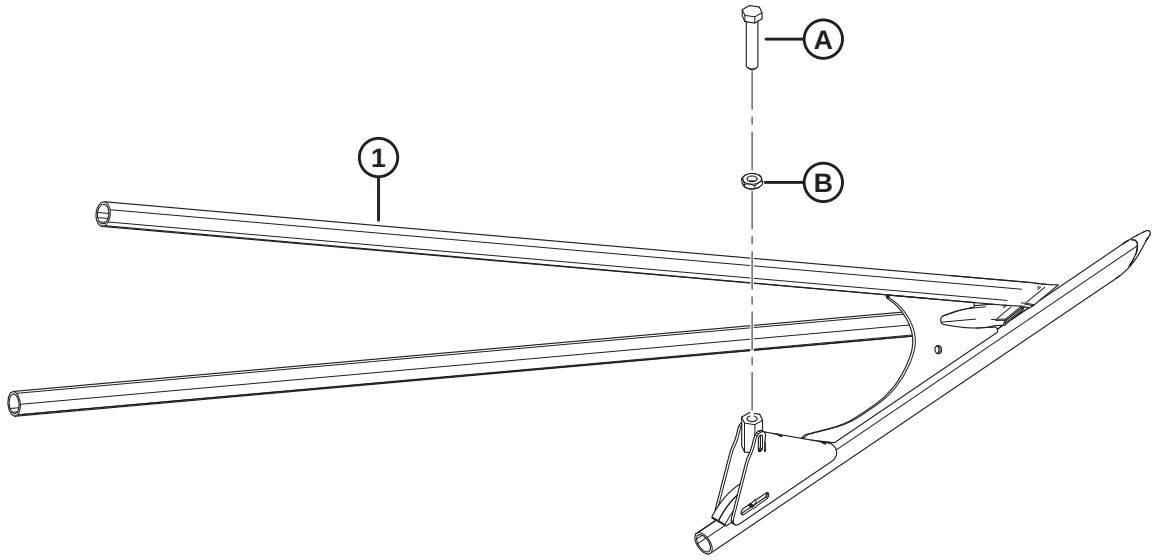

1034744

(OPTION) RICE DIVIDER RODS

NOTE:

Kits (B-bundle numbers and C-collector numbers) can be purchased from MacDon Whole Goods only.

Ref	Part Number	Description	Qty	Serial Number
	B7238	RICE DIVIDER RODS [235]		
1	MAC340095	DIVIDER – RICE LH TUBE WELDT	1	
	MAC340096	DIVIDER – RICE RH TUBE WELDT	1	
A	MAC232762	SET SCREW – MACHINED		
B	MAC184696	NUT – HEX THIN M12 X 1.75-05-AA1J		

235. Kits are available through Whole Goods only.

98 (Option) Rock Retarder Kit

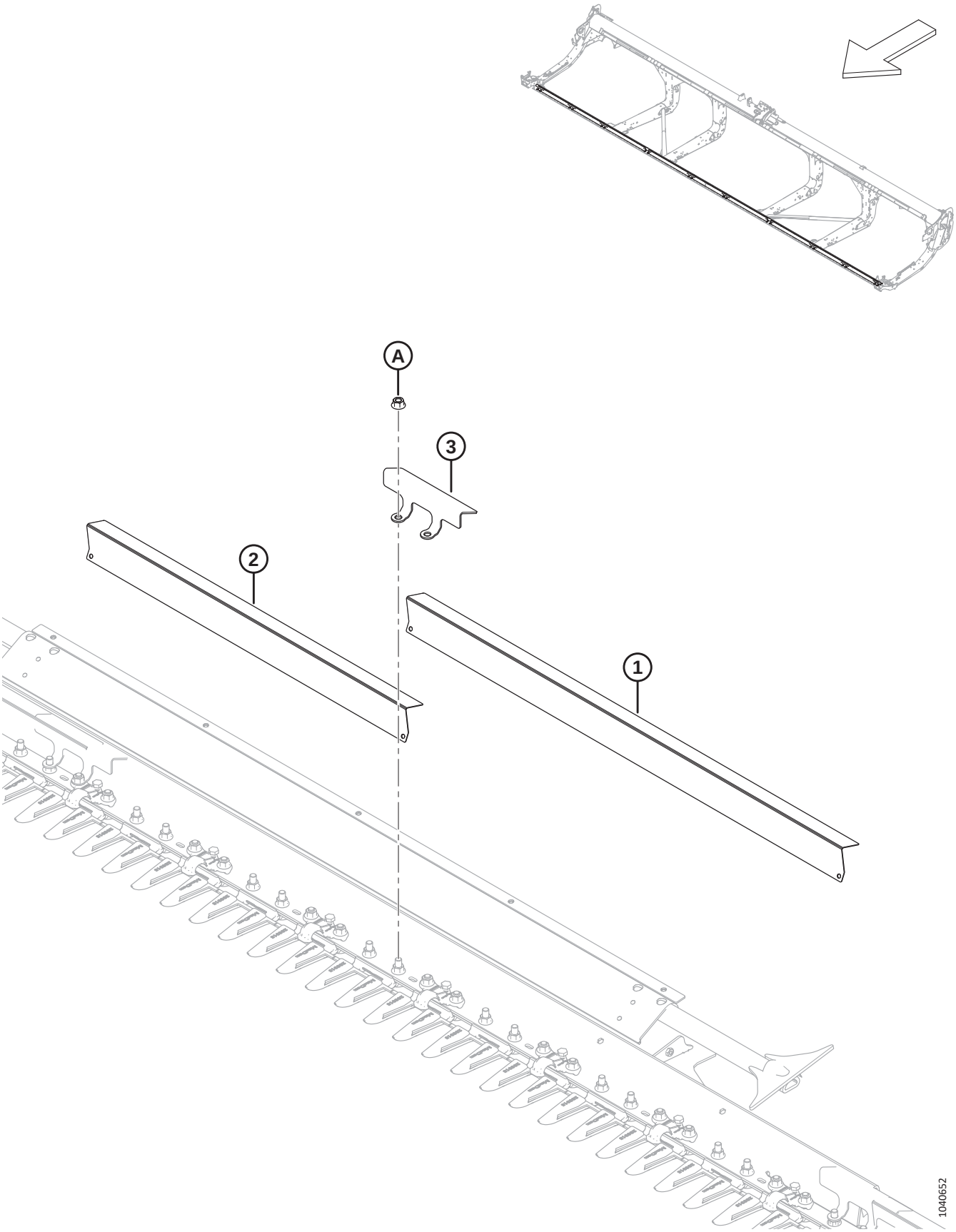

(OPTION) ROCK RETARDER KIT

NOTE:

Kits (B-bundle numbers and C-collector numbers) can be purchased from MacDon Whole Goods only.

Ref	Part Number	Description	Qty	Serial Number
	B7122	KIT – ROCK RETARDER, D225, D230, D235, AND D241 [236]		
	B7123	KIT – ROCK RETARDER KIT, D245 [236]		
1	MAC233800	DEFLECTOR – ROCK GUARD LONG [237]		
2	MAC233799	DEFLECTOR – ROCK GUARD SHORT [238]		
3	MAC233635	CLAMP – ROCK GUARD [239]		
A	MAC136036	NUT – HEX SM FLG M12 X 1.75-8-AA1J		

236. Kits are available through Whole Goods only.
237. Quantities per kit: B7122 = 4, B7123 = 10.
238. Quantities per kit: B7122 = 9, B7123 = 4.
239. Quantities per kit: B7122 = 14, B7123 = 15.

99 (Option) Service Kit – Pointed Guards, Coarse Knives

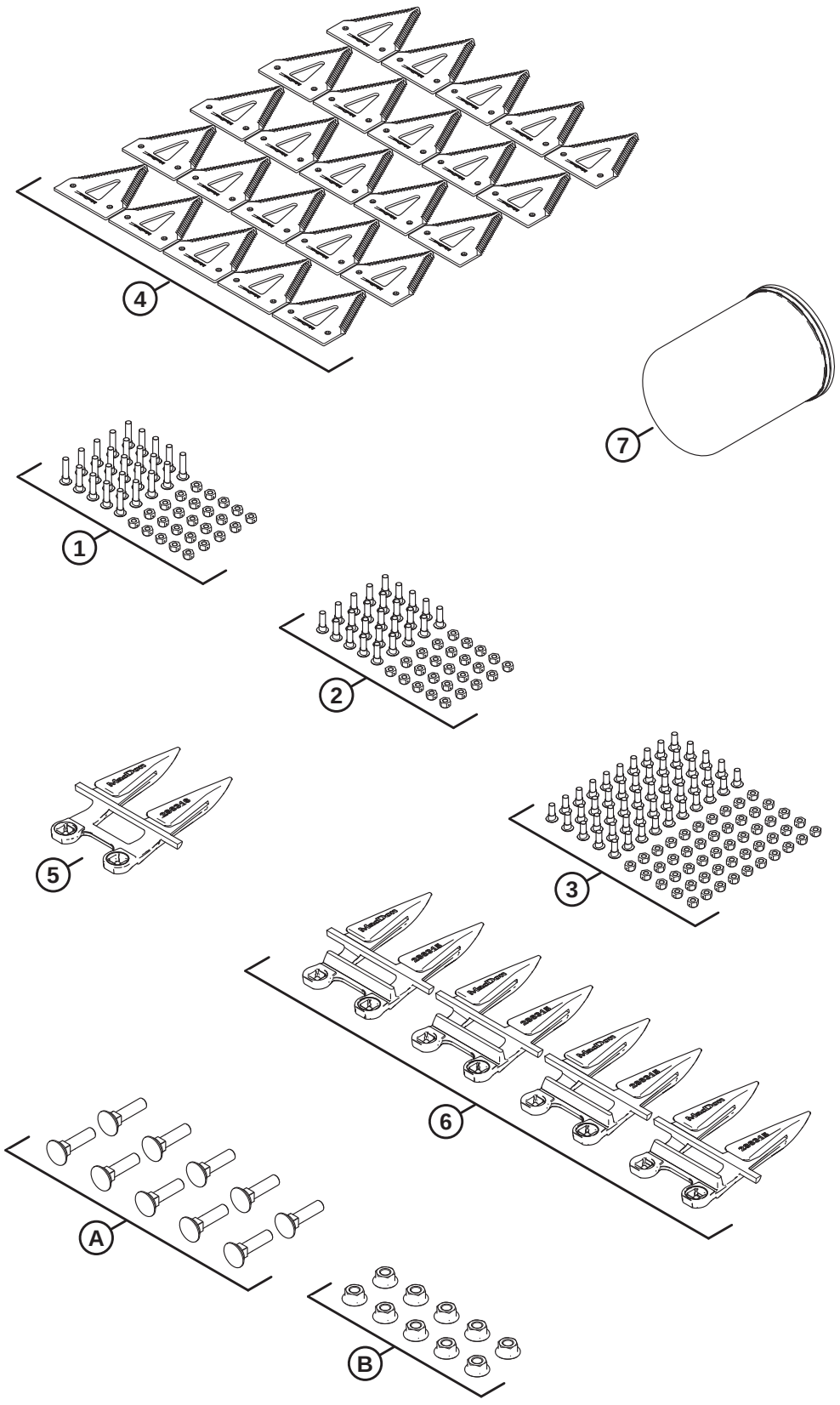

1034897

(OPTION) SERVICE KIT – POINTED GUARDS, COARSE KNIVES

NOTE:

Kits (B-bundle numbers and C-collector numbers) can be purchased from MacDon Whole Goods only.

Ref	Part Number	Description	Qty	Serial Number
	B7155	KIT – SERVICE, POINTED, COARSE [240]		
	MAC311789	KIT – D2 SERVICE PTD CRS [241]		
1	MAC286477	KIT – SCREW M6 X 29 C/W NUT 25PK	1	
2	MAC286476	KIT – SCREW M6 X 22 C/W NUT 25PK	1	
3	MAC286475	KIT – SCREW M6 X 18 C/W NUT 50PK	1	
4	MAC286461	SECTION – CLEARCUT COARSE 25PK	1	
5	MAC286316	KNIFE GUARD – POINTED END	1	
6	MAC286315	KNIFE GUARD – POINTED	4	
7	MAC320360	FILTER – HYD C/W 2X SEALS	1	
A	MAC226295	BOLT – RHSN SPCL M12 X 47-8.8		
B	MAC136036	NUT – HEX SM FLG M12 X 1.75-8-AA1J		

240. Kits are available through Whole Goods only.
241. The kit includes all listed parts.

100 (Option) Service Kit – PlugFree™ Guards, Coarse Knives

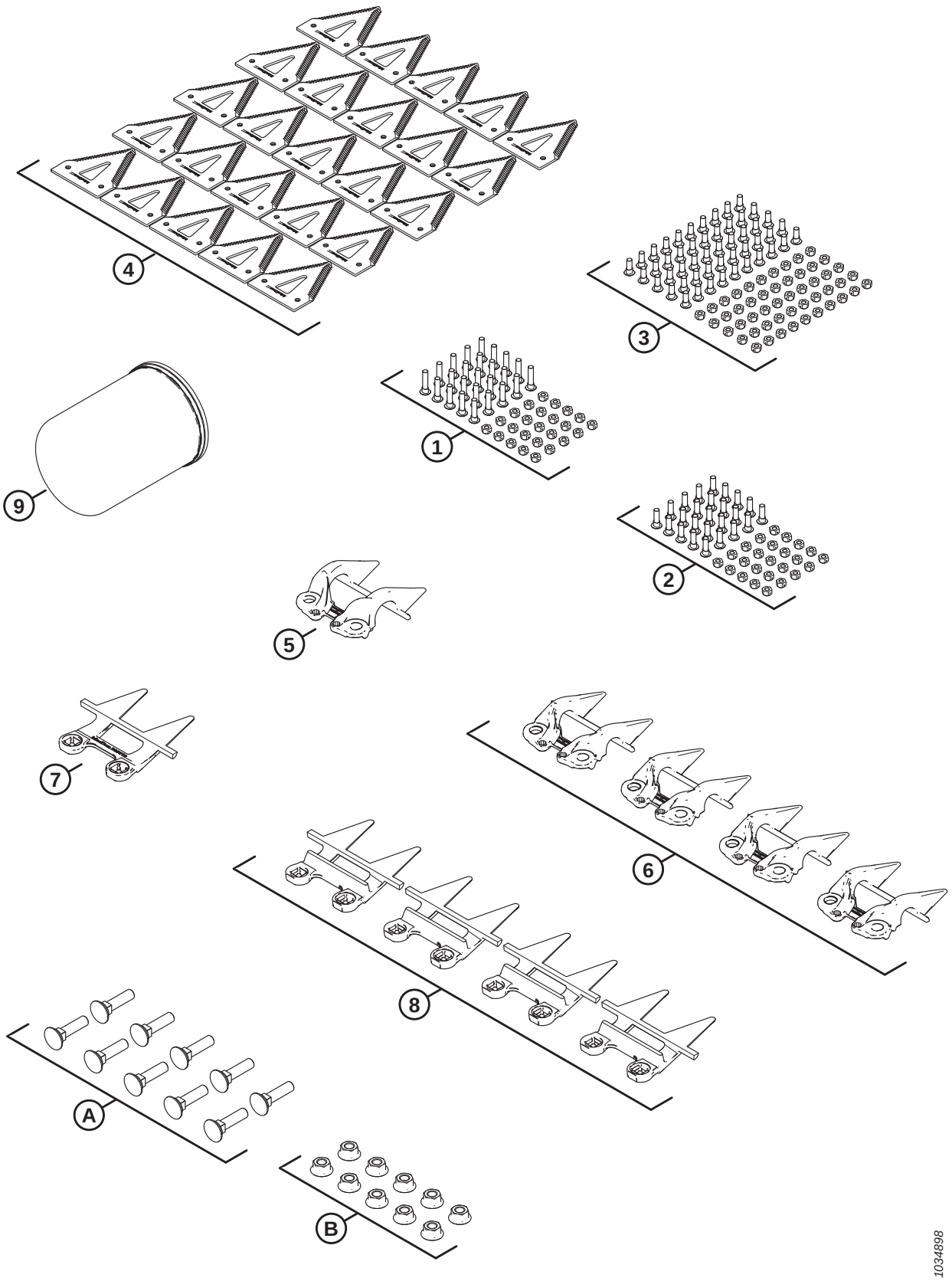

(OPTION) SERVICE KIT – PLUGFREE™ GUARDS, COARSE KNIVES

NOTE:

Kits (B-bundle numbers and C-collector numbers) can be purchased from MacDon Whole Goods only.

Ref	Part Number	Description	Qty	Serial Number
	B7156	KIT – SERVICE, PLUGFREE, COARSE [242]		
	MAC311790	KIT – D2 SERVICE PF CRS [243]		
1	MAC286477	KIT – SCREW M6 X 29 C/W NUT 25PK	1	
2	MAC286476	KIT – SCREW M6 X 22 C/W NUT 25PK	1	
3	MAC286475	KIT – SCREW M6 X 18 C/W NUT 50PK	1	
4	MAC286461	SECTION – CLEARCUT COARSE 25PK	1	
5	MAC286331	HOLD-DOWN – PLUGFREE END	1	
6	MAC286330	HOLD-DOWN – PLUGFREE	4	
7	MAC286319	KNIFE GUARD – PLUGFREE END	1	
8	MAC286318	KNIFE GUARD – PLUGFREE	4	
9	MAC320360	FILTER – HYD C/W 2X SEALS	1	
A	MAC226295	BOLT – RHSN SPCL M12 X 47-8.8		
B	MAC136036	NUT – HEX SM FLG M12 X 1.75-8-AA1J		

242. Kits are available through Whole Goods only.
243. The kit includes all listed parts.

101 (Option) Service Kit Plus – Single Knife

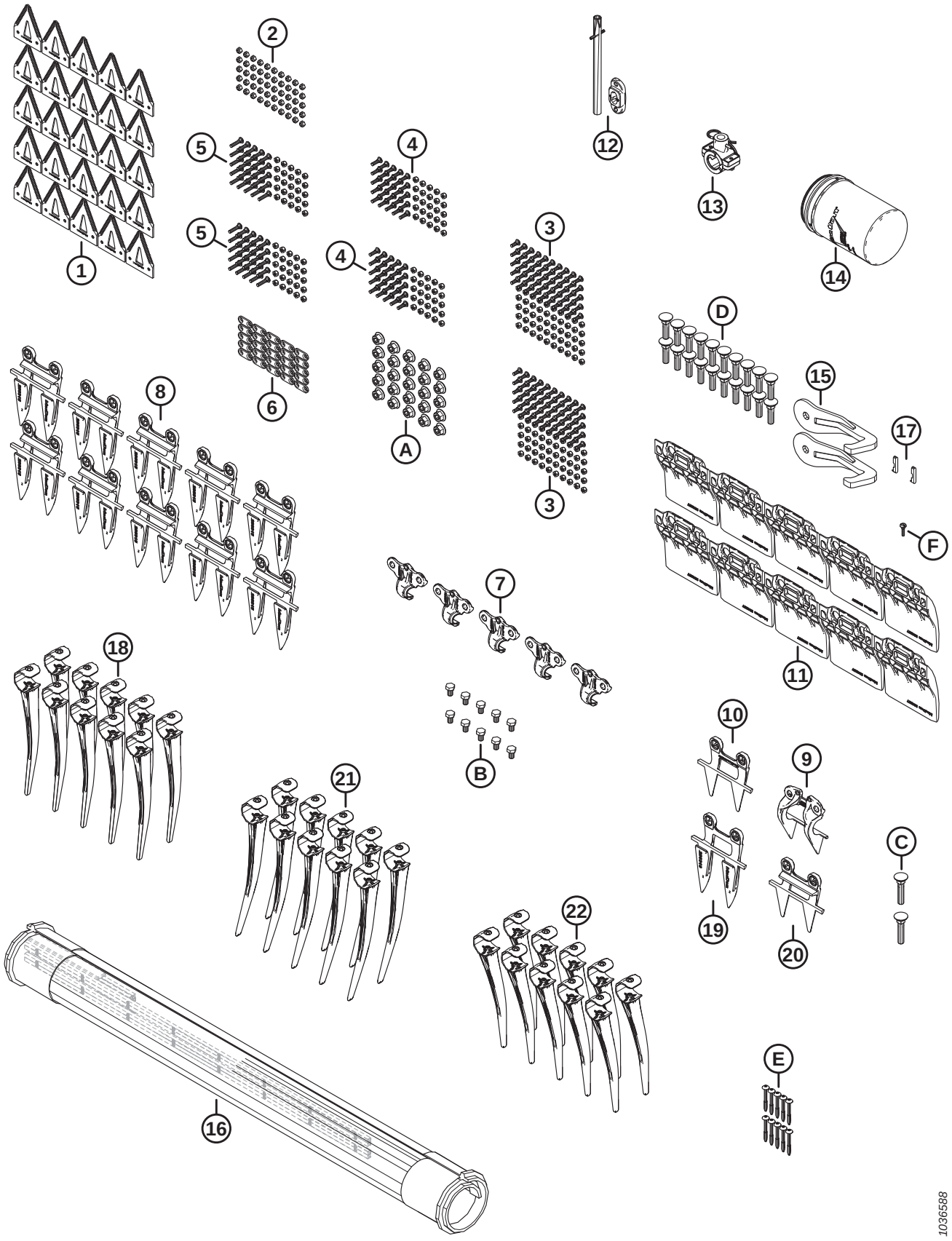

(OPTION) SERVICE KIT PLUS – SINGLE KNIFE

NOTE:

Kits (B-bundle numbers and C-collector numbers) can be purchased from MacDon Whole Goods only.

Ref	Part Number	Description	Qty	Serial Number
	B7365	KIT – SERVICE PLUS, SK D2 [244]		
	MAC340492	KIT – SERVICE PLUS, SK D2 [245]		
1	MAC286461	SECTION – CLEARCUT COARSE 25PK	1	
2	MAC286479	KIT – NUT CTR LOC CSK M6 X 1 50PK	1	
3	MAC286475	KIT – SCREW M6 X 18 C/W NUT 50PK	2	
4	MAC286476	KIT – SCREW M6 X 22 C/W NUT 25PK	2	
5	MAC286477	KIT – SCREW M6 X 29 C/W NUT 25PK	2	
6	MAC286481	BAR – REINFORCEMENT 25PK	1	
7	MAC286329	HOLD-DOWN – POINTED	5	
8	MAC286315	KNIFE GUARD – POINTED	10	
9	MAC286331	HOLD-DOWN – PLUGFREE END	1	
10	MAC286319	KNIFE GUARD – PLUGFREE END	1	
11	MAC286257	SHOE – WEARPLATE CUTTERBAR	10	
12	MAC337152	KIT – FINGER [246]	1	
13	MAC276839	KIT – FINGER HOLDER SPLIT, 5X [247]	1	
14	MAC320360	FILTER – HYD C/W 2X SEALS	1	
15	MAC258876	WELDT – BREAKAWAY HOOK	2	
16	MAC319105	KIT – DRAPER REPAIR 50 INCH [248]	1	
	MAC319095	KIT – DRAPER CONNECTOR 50 INCH [249]	2	
17	MAC275864	KEY – DRAPER DRIVE MOTOR	2	
18	MAC174849	FINGER – PLASTIC HEAVY DUTY (PKG OF 10)	1	
19	MAC286316	KNIFE GUARD – POINTED END	1	
20	MAC286318	KNIFE GUARD – PLUGFREE	1	
21	MAC311523	FINGER – PLASTIC, RH ANGLED, 52 MM (PKG OF 10)	1	
22	MAC311524	FINGER – PLASTIC, LH ANGLED, 45 MM (PKG OF 10)	1	

244. Kits are available through Whole Goods only.
245. The kit includes all listed parts.
246. The kit includes spring pin (MAC7642) and guide (MAC337143).
247. The kit includes 5 split finger holders (NSS), 10 spacers (NSS), 5 hairpins (MAC123180), hardware, and instructions.
248. The kit includes draper repair section (NSS) and two draper connector kits (MAC319095).
249. For service parts, refer to Section *9 Draper, page 19*.

(OPTION) SERVICE KIT PLUS – SINGLE KNIFE

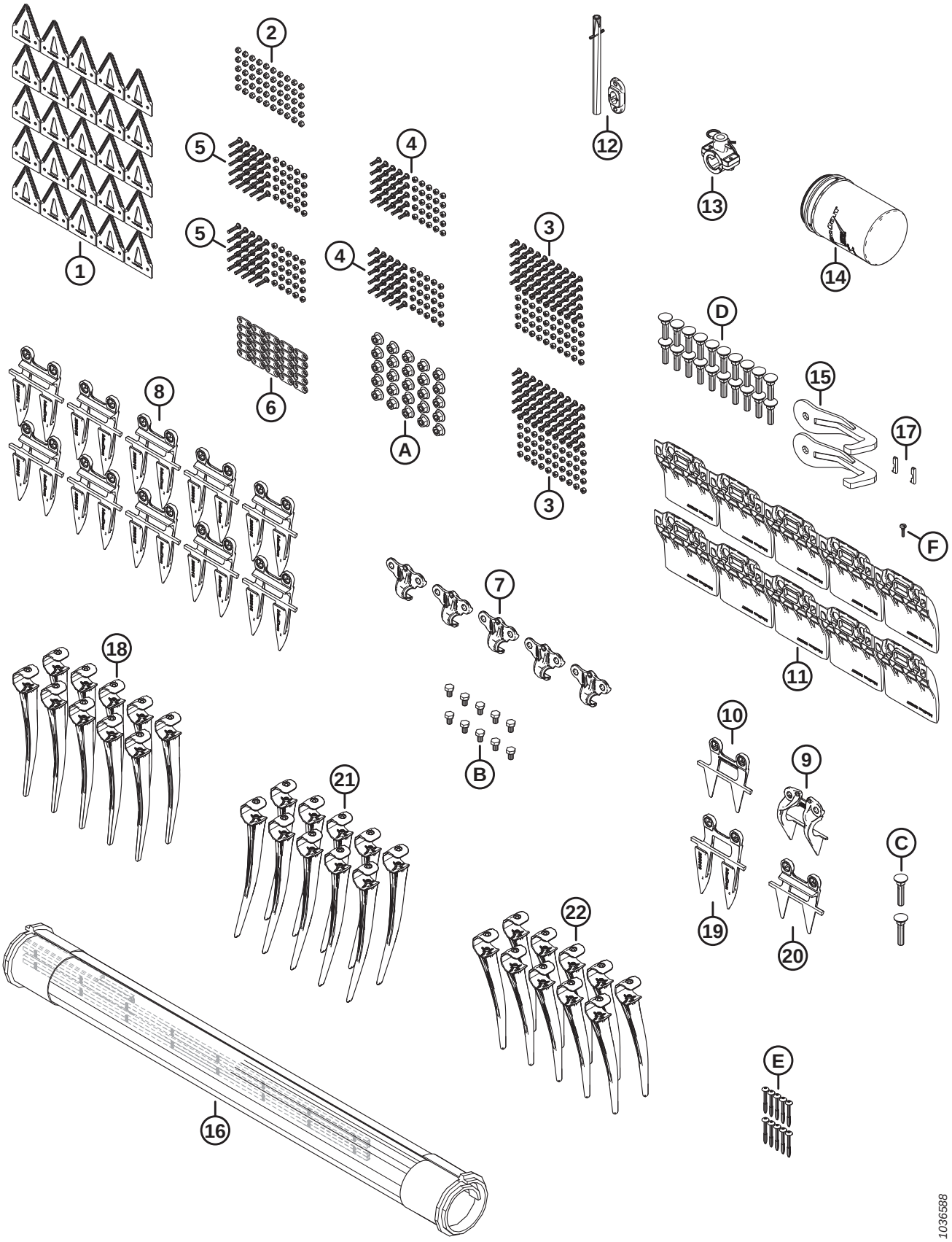

(OPTION) SERVICE KIT PLUS – SINGLE KNIFE

Ref	Part Number	Description	Qty	Serial Number
A	MAC136036	NUT – HEX SM FLG M12 X 1.75-8-AA1J		
B	MAC136005	BOLT – HEX HD FINE TFL M10 X 1.25 X 16-8.8-AA1J		
C	MAC226280	BOLT – RHSN SPCL M12 X 60-8.8		
D	MAC226295	BOLT – RHSN SPCL M12 X 47-8.8		
E	MAC252687	SCREW – 48° PLASTITE TWIN HELIX		
F	MAC135630	SCREW – BHRN #12-24 NC X 0.920 IN. LG (QTY 50)		

102 (Option) Service Kit Plus – Double Knife

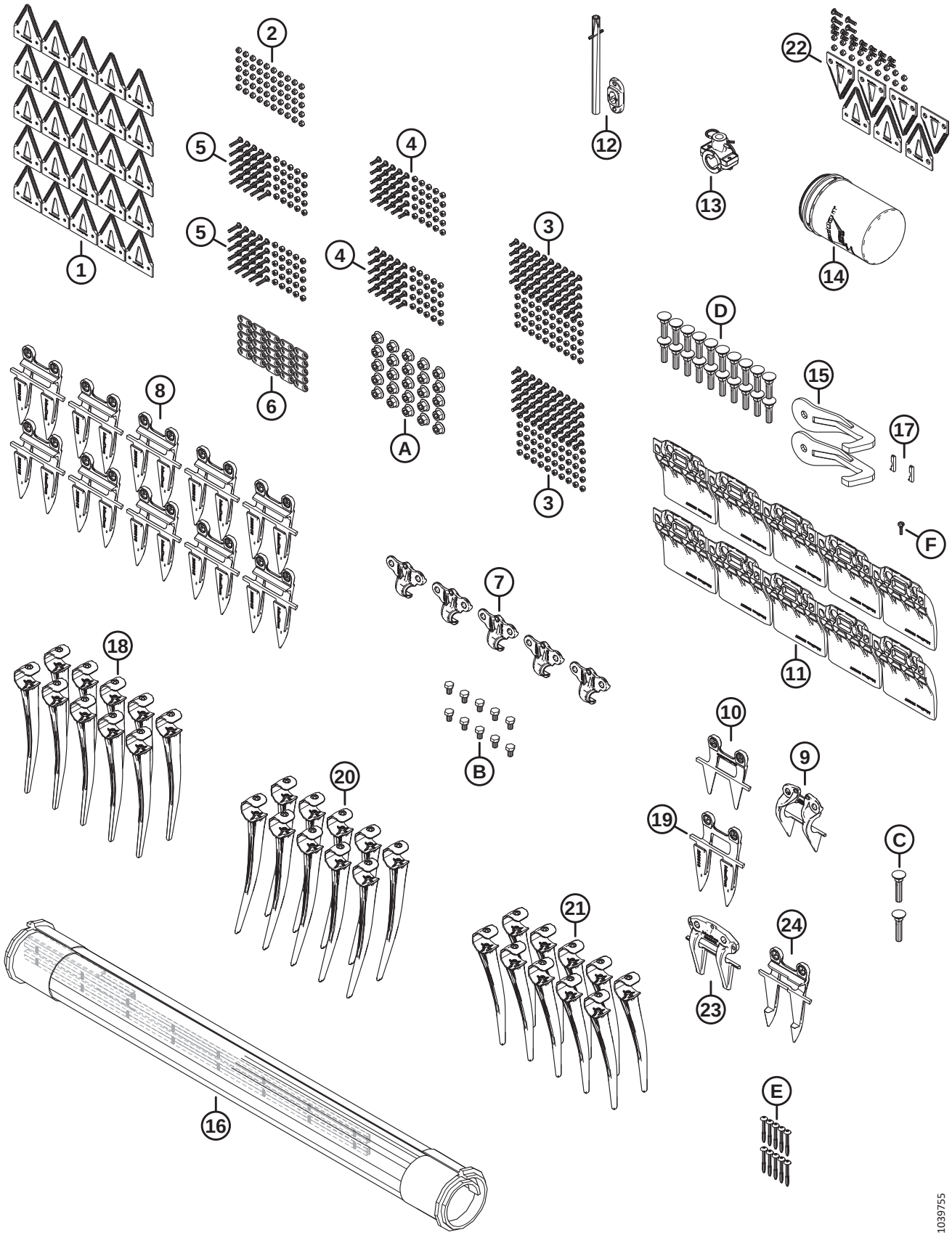

(OPTION) SERVICE KIT PLUS – DOUBLE KNIFE

NOTE:

Kits (B-bundle numbers and C-collector numbers) can be purchased from MacDon Whole Goods only.

Ref	Part Number	Description	Qty	Serial Number
	B7366	KIT – SERVICE PLUS, DK D2 [250]		
	MAC340493	KIT – SERVICE PLUS, DK D2 [251]		
1	MAC286461	SECTION – CLEARCUT COARSE 25PK	1	
2	MAC286479	KIT – NUT CTR LOC CSK M6 X 1 50PK	1	
3	MAC286475	KIT – SCREW M6 X 18 C/W NUT 50PK	2	
4	MAC286476	KIT – SCREW M6 X 22 C/W NUT 25PK	2	
5	MAC286477	KIT – SCREW M6 X 29 C/W NUT 25PK	2	
6	MAC286481	BAR – REINFORCEMENT 25PK	1	
7	MAC286329	HOLD-DOWN – POINTED	5	
8	MAC286315	KNIFE GUARD – POINTED	10	
9	MAC286331	HOLD-DOWN – PLUGFREE END	1	
10	MAC286319	KNIFE GUARD – PLUGFREE END	1	
11	MAC286257	SHOE – WEARPLATE CUTTERBAR	10	
12	MAC337152	KIT – FINGER [252]	1	
13	MAC276839	KIT – FINGER HOLDER SPLIT, 5X [253]	1	
14	MAC320360	FILTER – HYD C/W 2X SEALS	1	
15	MAC258876	WELDT – BREAKAWAY HOOK	2	
16	MAC319105	KIT – DRAPER REPAIR 50 INCH [254]	1	
	MAC319095	KIT – DRAPER CONNECTOR 50 INCH [255]	2	
17	MAC275864	KEY – DRAPER DRIVE MOTOR	2	
18	MAC174849	FINGER – PLASTIC HEAVY DUTY (PKG OF 10)	1	
19	MAC286316	KNIFE GUARD – POINTED END	1	
20	MAC311523	FINGER – PLASTIC, RH ANGLED, 52 MM (PKG OF 10)	1	
21	MAC311524	FINGER – PLASTIC, LH ANGLED, 45 MM (PKG OF 10)	1	

250. Kits are available through Whole Goods only.
251. The kit includes all listed parts.
252. The kit includes spring pin (MAC7642) and guide (MAC337143).
253. The kit includes 5 split finger holders (NSS), 10 spacers (NSS), 5 hairpins (MAC123180), hardware, and instructions.
254. The kit includes draper repair section (NSS) and two draper connector kits (MAC319095).
255. For service parts, refer to Section *9 Draper, page 19*.

(OPTION) SERVICE KIT PLUS – DOUBLE KNIFE

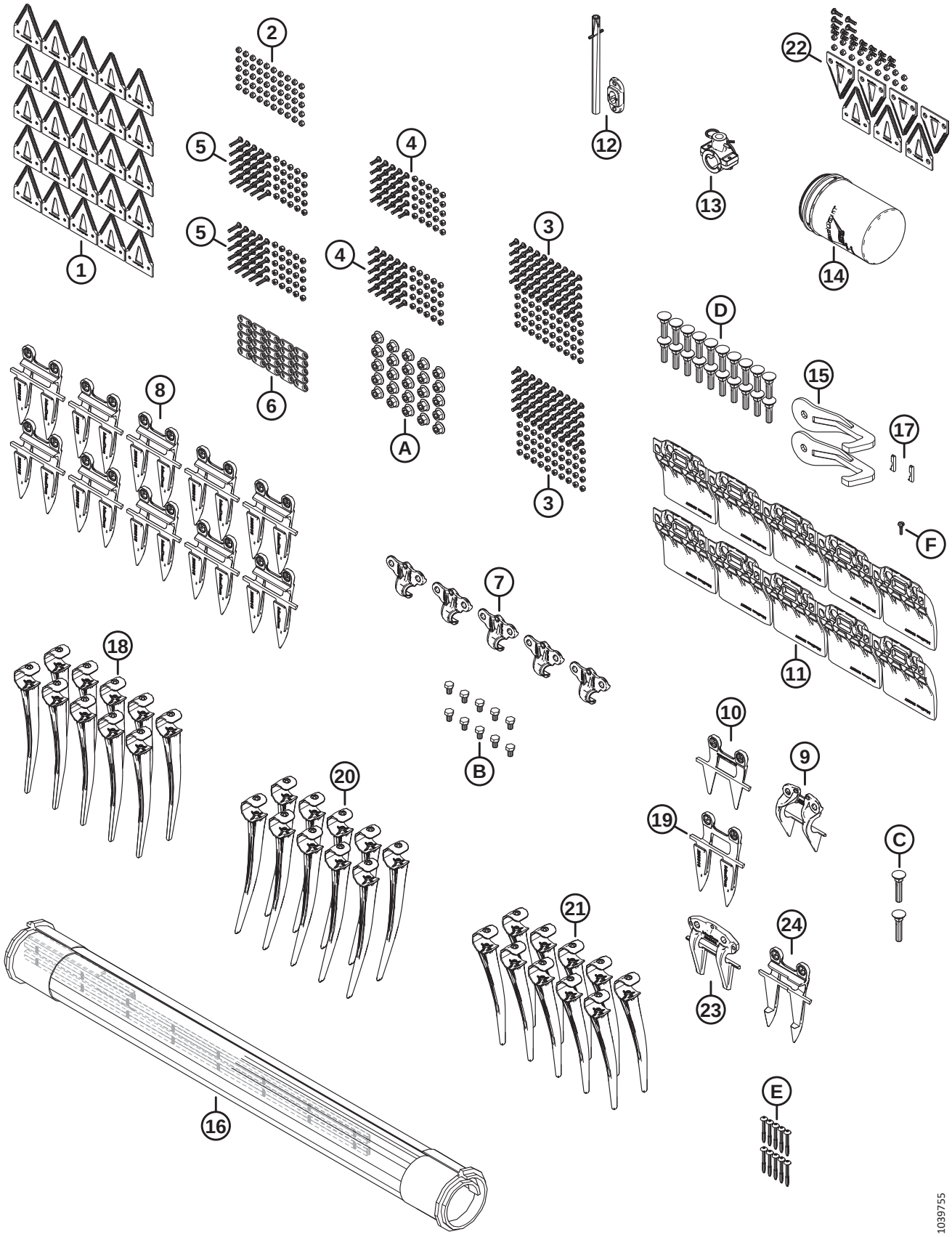

(OPTION) SERVICE KIT PLUS – DOUBLE KNIFE

Ref	Part Number	Description	Qty	Serial Number
22	MAC286861	KIT – CLEARCUT COARSE CENTER [256]	1	
23	MAC286332	HOLD-DOWN – POINTED CENTER	1	
24	MAC286317	KNIFE GUARD – POINTED CENTER	1	
A	MAC136036	NUT – HEX SM FLG M12 X 1.75-8-AA1J		
B	MAC136005	BOLT – HEX HD FINE TFL M10 X 1.25 X 16-8.8-AA1J		
C	MAC226280	BOLT – RHSN SPCL M12 X 60-8.8		
D	MAC226295	BOLT – RHSN SPCL M12 X 47-8.8		
E	MAC252687	SCREW – 48° PLASTITE TWIN HELIX		
F	MAC135630	SCREW – BHRN #12-24 NC X 0.920 IN. LG (QTY 50)		

256. The kit includes five ClearCut coarse top sections (NSS), two ClearCut coarse bottom sections (NSS), and hardware.

103 (Option) Stabilizer Wheels

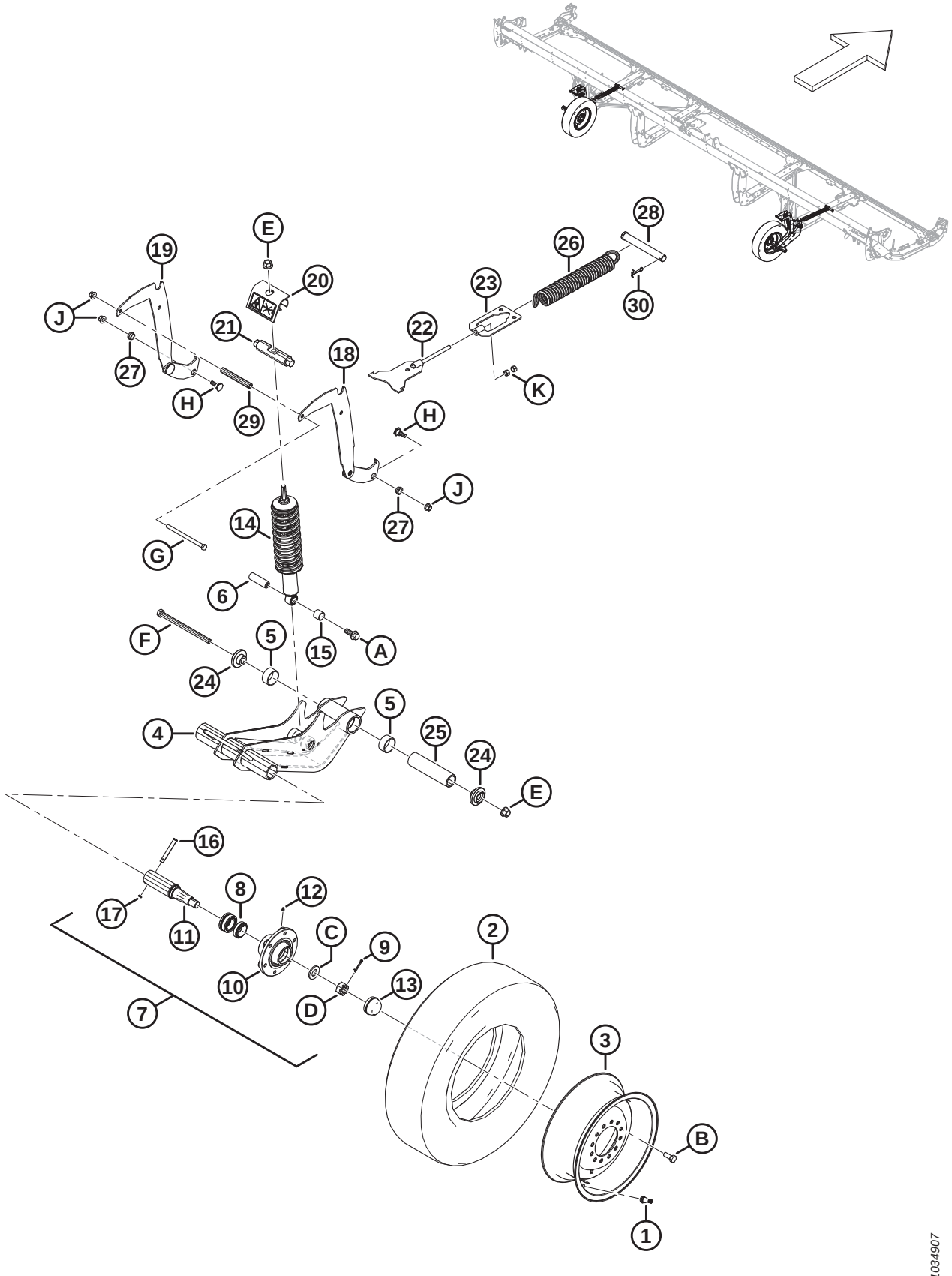

(OPTION) STABILIZER WHEELS

NOTE:

Kits (B-bundle numbers and C-collector numbers) can be purchased from MacDon Whole Goods only.

Ref	Part Number	Description	Qty	Serial Number
	C2051	STABILIZER WHEELS – KIT [257]		
	B6275	KIT – TIRES, 225/75R15 [257]		
1	MAC230968	STEM – TIRE VALVE ASSY #TR-416	2	
2	MAC230483	TIRE – ST 225/75 R15 LRE	2	
3	MAC144531	WHEEL – 15 X 6 LB	2	
	MAC327717	DECAL – TIRE PRESSURE	2	
	B6460	KIT – STABILIZER WHEELS [257]		
4	MAC327682	ASSY – PIVOT ARM [258]	2	
5	MAC327600	BUSHING – COMPOSITE	4	
6	MAC316793	PIN	2	
7	MAC316330	ASSY – HUB [259]	2	
8	MAC316851	KIT – WHEEL BEARING	2	
9	MAC18608	PIN – COTTER 3/16 DIA X 1.5 ZP	2	
10	MAC316847	HUB	2	
11	MAC316848	SPINDLE	2	
12	MAC18671	FITTING – LUBE 1/4-28 UNF	2	
13	MAC30520	CAP – DUST	2	
14	MAC210340	DAMPENER – HEADER [260]	2	
15	MAC133992	BUSHING – COMPOSITE	2	
16	MAC101007	PIN – CLEVIS	2	
17	MAC18648	PIN – COTTER 3/16 DIA X 1.25 ZP	2	
18	MAC327656	WELDT – SUPPORT, HEIGHT ADJUST	2	

257. Kits are available through Whole Goods only.
258. The pivot arm assembly includes two composite bushings (MAC327600).
259. The hub assembly includes pin (MAC18608), fitting (MAC18671), six bolts (MAC18916), dust cap (MAC30520), hub (MAC316847), spindle (MAC316848), wheel bearing kit (MAC316851), nut (MAC316859), and washer (MAC316860).
260. The dampener includes composite bushing (MAC133992).

(OPTION) STABILIZER WHEELS

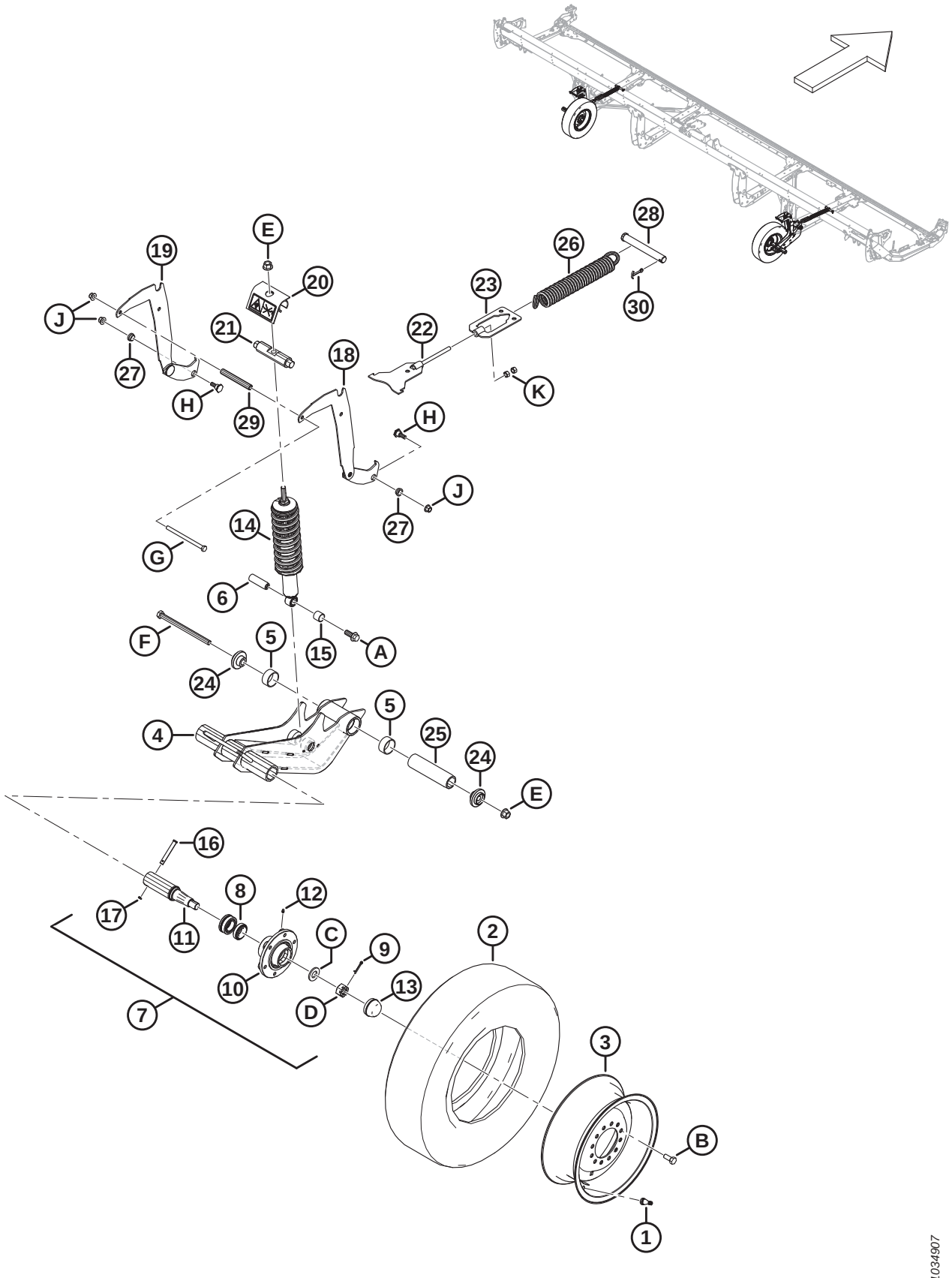

(OPTION) STABILIZER WHEELS

Ref	Part Number	Description	Qty	Serial Number
19	MAC327655	WELDT – SUPPORT, HEIGHT ADJUST	2	
20	MAC327089	ASSY – ANTI PRY [261]	2	
21	MAC316284	PIN	2	
22	MAC316096	SUPPORT – WELDT	2	
23	MAC316095	SUPPORT – WELDT	2	
24	MAC303839	CASTING – PLATE	4	
25	MAC303525	PIN – PIVOT	2	
26	MAC303520	SPRING – EXTENSION	2	
27	MAC303492	BUSHING – COMPOSITE	4	
28	MAC292692	PIN – CLEVIS	2	
29	MAC210985	SPACER	2	
30	MAC18609	PIN – COTTER 1/4 DIA X 2 ZP	2	
	MAC327086	DECAL – ENERGY RELEASE	2	
	MAC316662	DECAL – HEIGHT SETTING	2	
A	MAC320060	BOLT – HEX FLG HD TFL M16 X 2 X 40-10.9-ZINC		
B	MAC18916	BOLT – 90° WHEEL 9/16 NF X 1.75 OL-AA1J		
C	MAC316860	WASHER		
D	MAC316859	NUT – SLOTTED		
E	MAC136440	NUT – HEX FLG CTR LK M16 X 2-10-AA1J		
F	MAC320011	BOLT – HEX HD M16 X 2 X 240-10.9-ZINC		
G	MAC252272	BOLT – HEX HD TFL M12 X 1.75 X 180-10.9-ZINC		
H	MAC303251	BOLT – 19 MM SHLDR M12 SPCL		
J	MAC136431	NUT – HEX FLG CTR LOC M12 X 1.75-10		
K	MAC135156	NUT – HEX M12 X 1.75-10-AA1J		

261. The anti-pry assembly includes energy release decal (MAC327086).

104 (Option) Steel Finger Kit

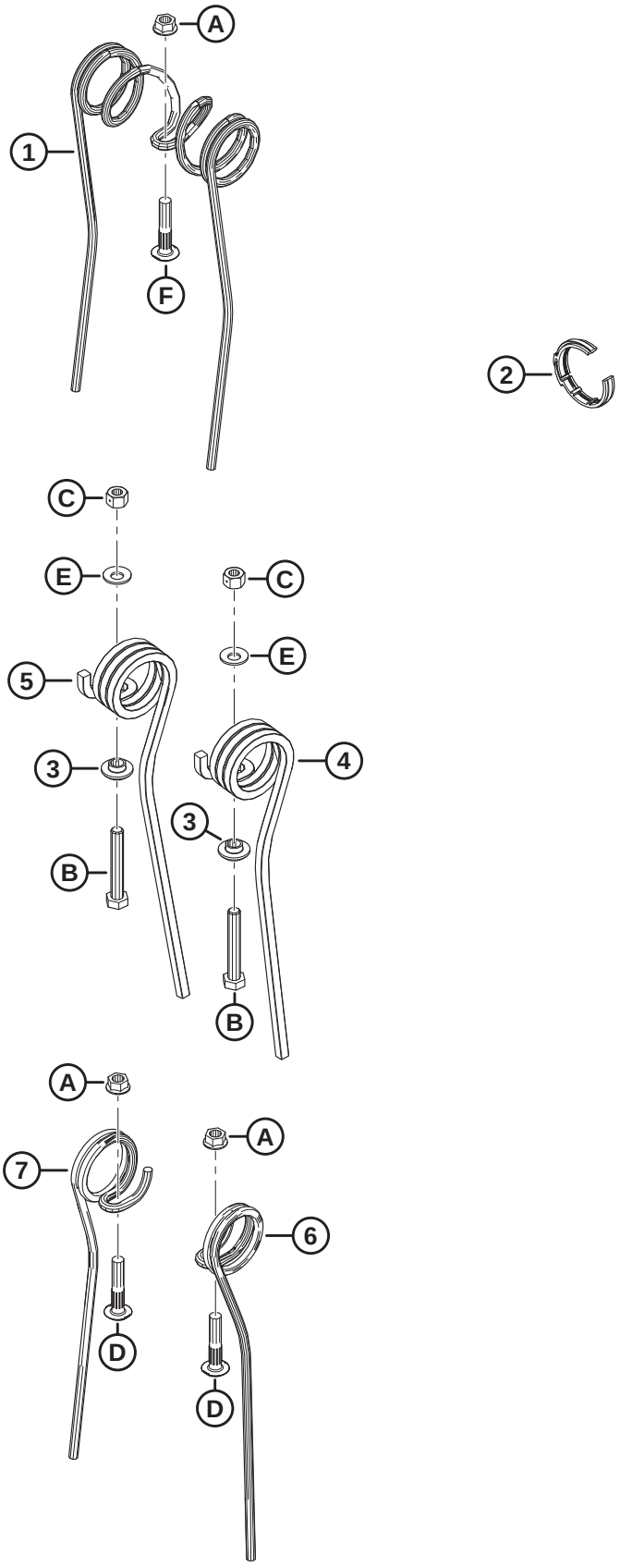

1036678

(OPTION) STEEL FINGER KIT

Ref	Part Number	Description	Qty	Serial Number
	MAC360680	KIT – STEEL FINGER, 25 FT SR, 9 BAT [262]		
	MAC311055	KIT – STEEL FINGER, 30 FT DR, 6 BAT [262]		
	MAC311069	KIT – STEEL FINGER, 35 FT DR, 6 BAT [262]		
1	MAC137092	FINGER [263]		
2	MAC220941	CLAMP – TINE TUBE BUSHING - CENTER RIB (BOX OF 5) [264]		
3	MAC273052	RETAINER – END FINGER [265]		
4	MAC311321	FINGER – TAIL END OUTBOARD [266]		
5	MAC311322	FINGER – TAIL END INBOARD [267]		
6	MAC137754	FINGER – RH SINGLE CONCENTRIC [268]		
7	MAC137519	FINGER – LH SINGLE CONCENTRIC [269]		
A	MAC30228	NUT – FLG DT SM FACE 3/8-16 UNC-GR5-AA1J		
B	MAC108172	BOLT – HEX HD M10 X 1.5 X 65-8.8-AA1J		
C	MAC135800	NUT – HEX CTR LOC SPCL M10 X 1.5-9-AA1J		
D	MAC137118	BOLT –BTN HD RIB NK 3/8 NC		
E	MAC184584	WASHER – CON SPRING M10 STL SAE		

262. The kit includes all listed parts and instructions. Refer to the footnotes on individual service parts for quantities.
263. Quantities: D225 SR 9 Bat = 190, D230 DR 6 Bat = 135, D235 DR 6 Bat = 171.
264. Quantities: D225 SR 9 Bat = 9, D230 DR 6 Bat = 8, D235 DR 6 Bat = 10.
265. Quantities: D225 SR 9 Bat = 9, D230 DR 6 Bat = 12, D235 DR 6 Bat = 12.
266. Quantities: D225 SR 9 Bat = 9, D230 DR 6 Bat = 6, D235 DR 6 Bat = 6.
267. Quantities: D225 SR 9 Bat = 0, D230 DR 6 Bat = 6, D235 DR 6 Bat = 6.
268. Quantities: D225 SR 9 Bat = 9, D230 DR 6 Bat = 6, D235 DR 6 Bat = 24.
269. Quantities: D225 SR 9 Bat = 34, D230 DR 6 Bat = 12, D235 DR 6 Bat = 36.

105 (Option) Sunflower Attachment – Base Kit – Lean Bar and Deflectors

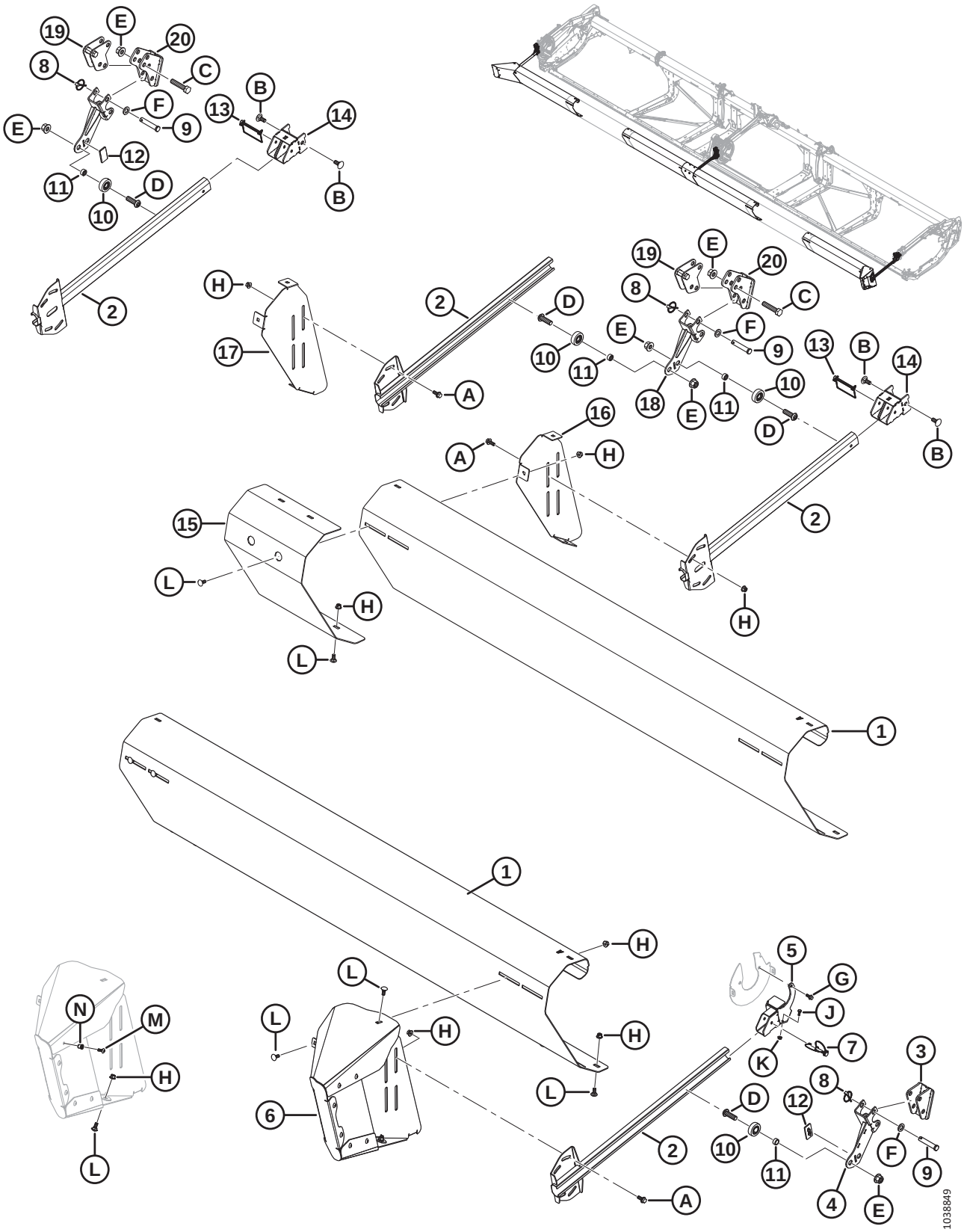

(OPTION) SUNFLOWER ATTACHMENT – BASE KIT – LEAN BAR AND DEFLECTORS

NOTE:

The Sunflower Attachment is compatible with pointed knife guards only.

NOTE:

Kits (B-bundle numbers and C-collector numbers) can be purchased from MacDon Whole Goods only.

Ref	Part Number	Description	Qty	Serial Number
	C2086	KIT – 30 FOOT SUNFLOWER ATTACHMENT [270]		
	C2087	KIT – 35 FOOT SUNFLOWER ATTACHMENT [270]		
	C2088	KIT – 41 FOOT SUNFLOWER ATTACHMENT [270]		
	C2089	KIT – 45 FOOT SUNFLOWER ATTACHMENT [270]		
	B7302	KIT – SUNFLOWER ATTACHMENT, BASE [271]		
1	MAC119691	DEFLECTOR – LEAN BAR A [272]	4	
2	MAC119757	ARM – PUSH BAR WELDT	4	
3	MAC119593	SUPPORT – LEAN BAR WELDT	1	
4	MAC119667	SUPPORT – LEAN BAR WELDT	1	
5	MAC119666	BRACKET – HANGING WELDT	1	
6	MAC119706	DEFLECTOR-EXTENSION ASSY – LH [273]	1	
	MAC119705	DEFLECTOR-EXTENSION ASSY – RH [273]	1	
7	MAC320205	PIN – LYNCH DIA 5/16 IN. X 1.75 IN. LG W/ TETHER	1	
8	MAC102264	PIN – LYNCH 3/16 X 9/16 IN.	6	
9	MAC18624	PIN – CLEVIS	6	
10	MAC273524	BEARING – CAM FOLLOWER	4	
11	MAC101095	SPACER	4	
12	MAC273777	PAD – REEL DRIVE WEAR	2	
13	MAC136749	PIN – LYNCH	2	
14	MAC119738	BRACKET – WELDT	2	
15	MAC119725	DEFLECTOR – LEAN BAR FILLER	1	
16	MAC119696	BRACKET – LEAN BAR MOUNT, LH	1	

270. Kit contains base kit (B7302), pans kit (B7303), and deflectors kit (B7304, B7305, B7306, B7395, B7307, or B7396). Kits are available through Whole Goods only.
271. Base kit B7302 includes all parts listed in this section and Section *106 (Option) Sunflower Attachment – Base Kit – Pans and Supports, page 289*. Kits are available through Whole Goods only.
272. Four deflectors (MAC119691) are included in the base kit. D245 headers require a total of six.
273. Includes eight Torx screws (MAC320190), eight rivnuts (MAC252179), one bolt (MAC135785), and one nut (MAC135799).

(OPTION) SUNFLOWER ATTACHMENT – BASE KIT – LEAN BAR AND DEFLECTORS

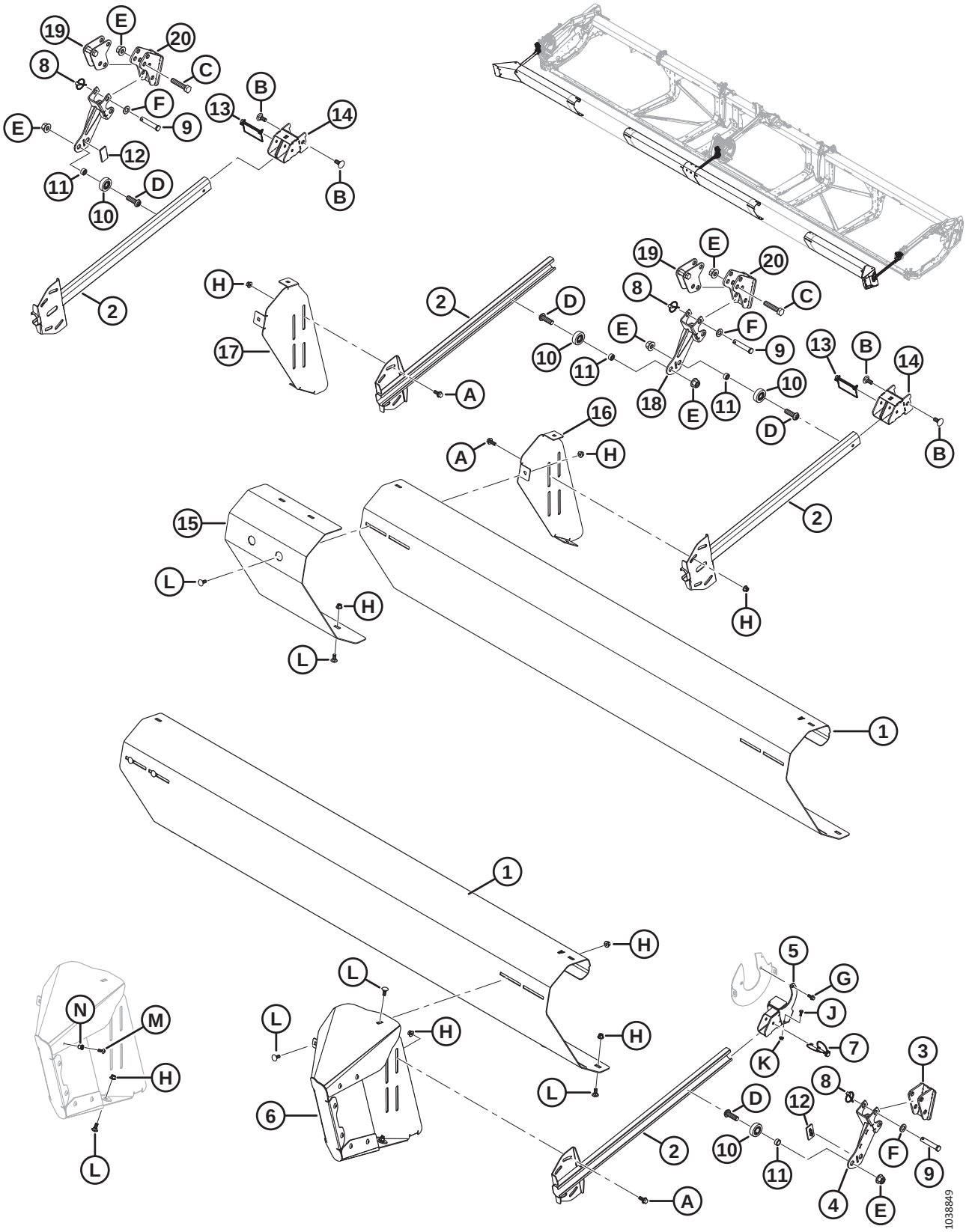

(OPTION) SUNFLOWER ATTACHMENT – BASE KIT – LEAN BAR AND DEFLECTORS

Ref	Part Number	Description	Qty	Serial Number
17	MAC119697	BRACKET – LEAN BAR MOUNT, RH	1	
18	MAC119672	SUPPORT – LEAN BAR WELDT	2	
19	MAC119641	ANCHOR – FORE AFT SUBWELDT	2	
20	MAC119623	SUPPORT – FRONT ANCHOR WELDT	2	
A	MAC135783	BOLT – HEX FLG HD TFL M10 X 1.5 X 25-10.9-AA1J		
B	MAC184667	BOLT – RHSN M12 X 1.75 X 30-8.8-ZINC		
C	MAC181475	BOLT – HEX HD M16 X 2 X 75-8.8-BE0R		
D	MAC320441	SCREW – HEX SOC BTN HD M16 X 2.0 X 50-10.9-AA1J		
E	MAC136440	NUT – HEX FLG CTR LK M16 X 2-10-AA1J		
F	MAC184717	WASHER – FLAT REG M16-200HV-AA1J		
G	MAC136300	BOLT – HEX FLG HD TFL M8 X 1.25 X 20-8.8-AA3L		
H	MAC135799	NUT – HEX FLG CTR LOC M10 X 1.5-10		
J	MAC21572	BOLT – HEX HD 1/4 20 X 0.625 GR5 AA1J		
K	MAC135248	NUT – HEX FLG CTR LOC		
L	MAC135785	BOLT – RHSN M10 X 1.5 X 25-8.8-AA1J		
M	MAC320190	SCREW – TORX TRUSS HD M8 X 1.25 X 20-SPCL-8.8-ZINC		
N	MAC252179	RIVNUT – M8 X 1.25 HEX 0.7-3.8		

106 (Option) Sunflower Attachment – Base Kit – Pans and Supports

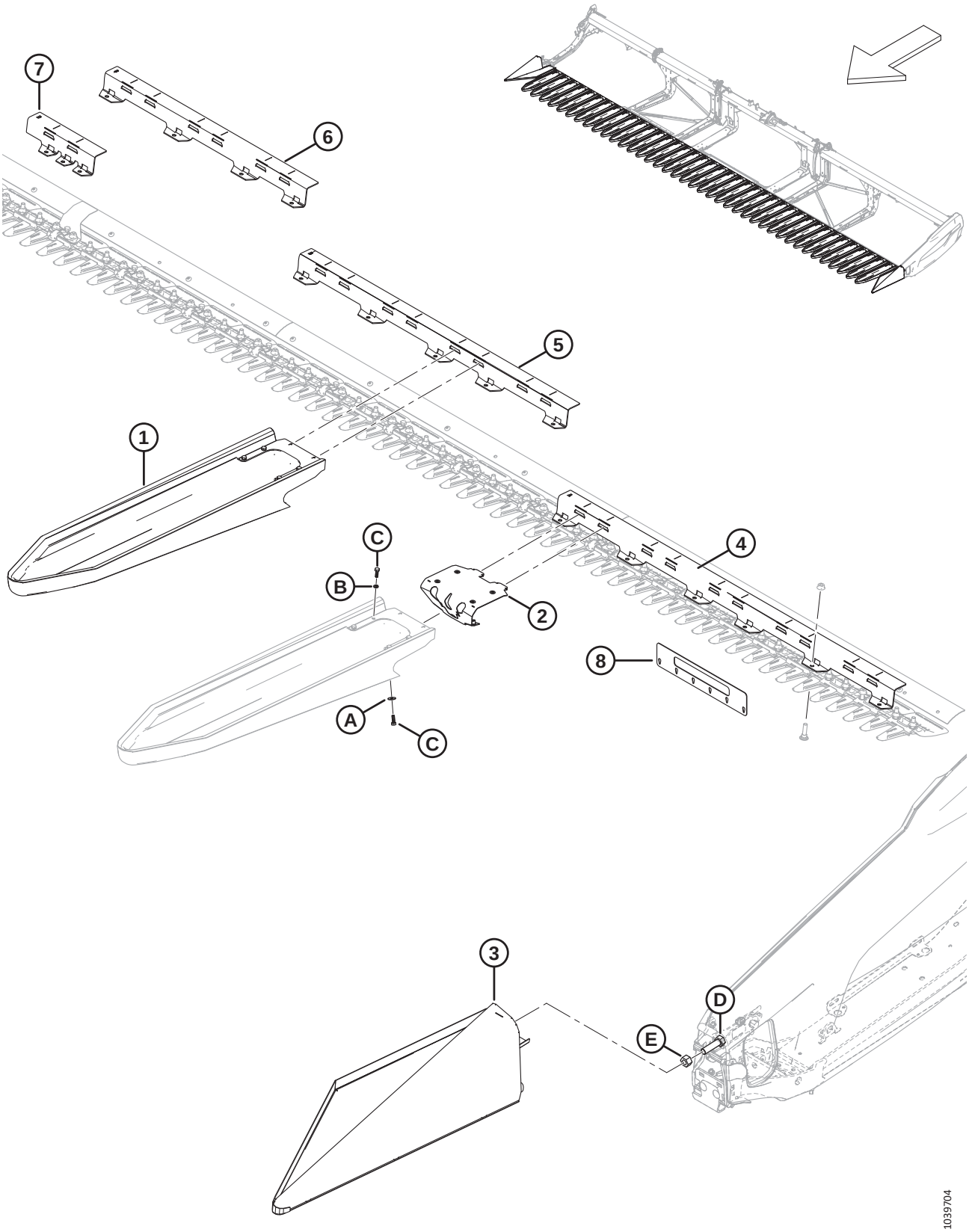

(OPTION) SUNFLOWER ATTACHMENT – BASE KIT – PANS AND SUPPORTS

NOTE:

The Sunflower Attachment is compatible with pointed knife guards only.

NOTE:

Kits (B-bundle numbers and C-collector numbers) can be purchased from MacDon Whole Goods only.

Ref	Part Number	Description	Qty	Serial Number
	B7302	KIT – SUNFLOWER ATTACHMENT, BASE [274]		
1	MAC119529	PAN – SUNFLOWER QUICK ATTACH [275]	5	
2	MAC119726	ASSEMBLY – PAN LATCH [276]	5	
3	MAC119560	PAN – END LH WELDT	1	
	MAC119565	PAN – END RH WELDT	1	
4	MAC119558	SUPPORT – PAN 5 FT A	2	
5	MAC119653	SUPPORT – PAN 4 FT B	3	
6	MAC119654	SUPPORT – PAN 3 FT C	4	
7	MAC119655	SUPPORT – PAN HINGE D	1	
	MAC119656	SUPPORT – PAN HINGE E	1	
8	MAC119766	TOOL – GUARD TIP CHECK, 2 SERIES	1	
A	MAC184709	WASHER – FLAT LARGE M8-200HV		
B	MAC30716	WASHER – LOCK SPRING M8-CS-1055-1065-AA1J		
C	MAC184652	BOLT – HEX HD TFL M8 X 1.25 X 25-8.8-AA1J		
D	MAC136339	BOLT – HEX HD FINE TFL M20 X 1.5 X 70 X 8.8-ZINC		
E	MAC136342	NUT – HEX FINE M20 X 1.5 X 10-AA3L		

274. Base kit B7302 includes all parts listed in this section and Section *105 (Option) Sunflower Attachment – Base Kit – Lean Bar and Deflectors, page 285*. Kits are available through Whole Goods only.
275. Includes latch assembly (MAC119726), clamp (NSS), six bolts (MAC184652), four lock spring washers (MAC30716), and two flat washers (MAC184709).
276. Includes six rivnuts (MAC252179).

107 (Option) Sunflower Attachment – Deflector Kits

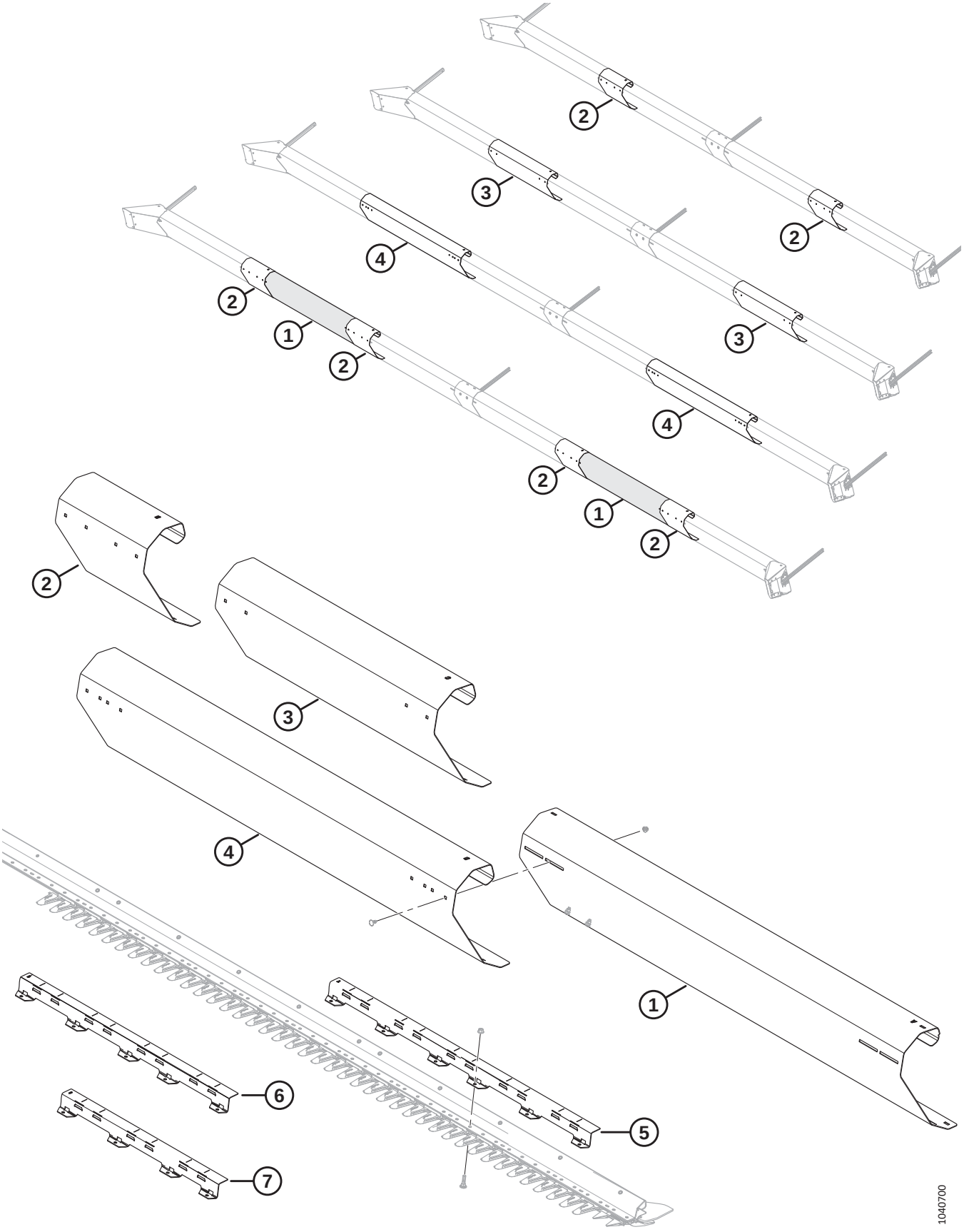

(OPTION) SUNFLOWER ATTACHMENT – DEFLECTOR KITS

NOTE:

The Sunflower Attachment is compatible with pointed knife guards only.

NOTE:

Kits (B-bundle numbers and C-collector numbers) can be purchased from MacDon Whole Goods only.

Ref	Part Number	Description	Qty	Serial Number
	B7304	KIT – SUNFLOWER DEFLECTOR 30 FT [277]		
	B7305	KIT – SUNFLOWER DEFLECTOR 35 FT [277]		
	B7306	KIT – SUNFLOWER DEFLECTOR 41 FT [277]		
	B7307	KIT – SUNFLOWER DEFLECTOR 45 FT [277]		
1	MAC119691	DEFLECTOR – LEAN BAR A [278]	2	
2	MAC119692	DEFLECTOR – LEAN BAR B [279]		
3	MAC119693	DEFLECTOR – LEAN BAR C [280]	2	
4	MAC119694	DEFLECTOR – LEAN BAR D [281]	2	
5	MAC119558	SUPPORT – PAN A (5 FT) [282]	2	
6	MAC119653	SUPPORT – PAN B (4 FT) [281]	1	
7	MAC119654	SUPPORT – PAN C (3 FT) [283]	3	

277. Kits are available through Whole Goods only.
278. Included in B7307 (D245 headers).
279. Included in B7304 (D230 headers) and B7307 (D245 headers). Quantites: D230 = 2; D245 = 4.
280. Included in B7305 (D235 headers)
281. Included in B7306 (D241 headers).
282. Included in B7306 (D241 headers) and B7307 (D245 headers).
283. Included in B7305 (D235 headers) and B7307 (D245 headers).

108 (Option) Sunflower Attachment – Pans

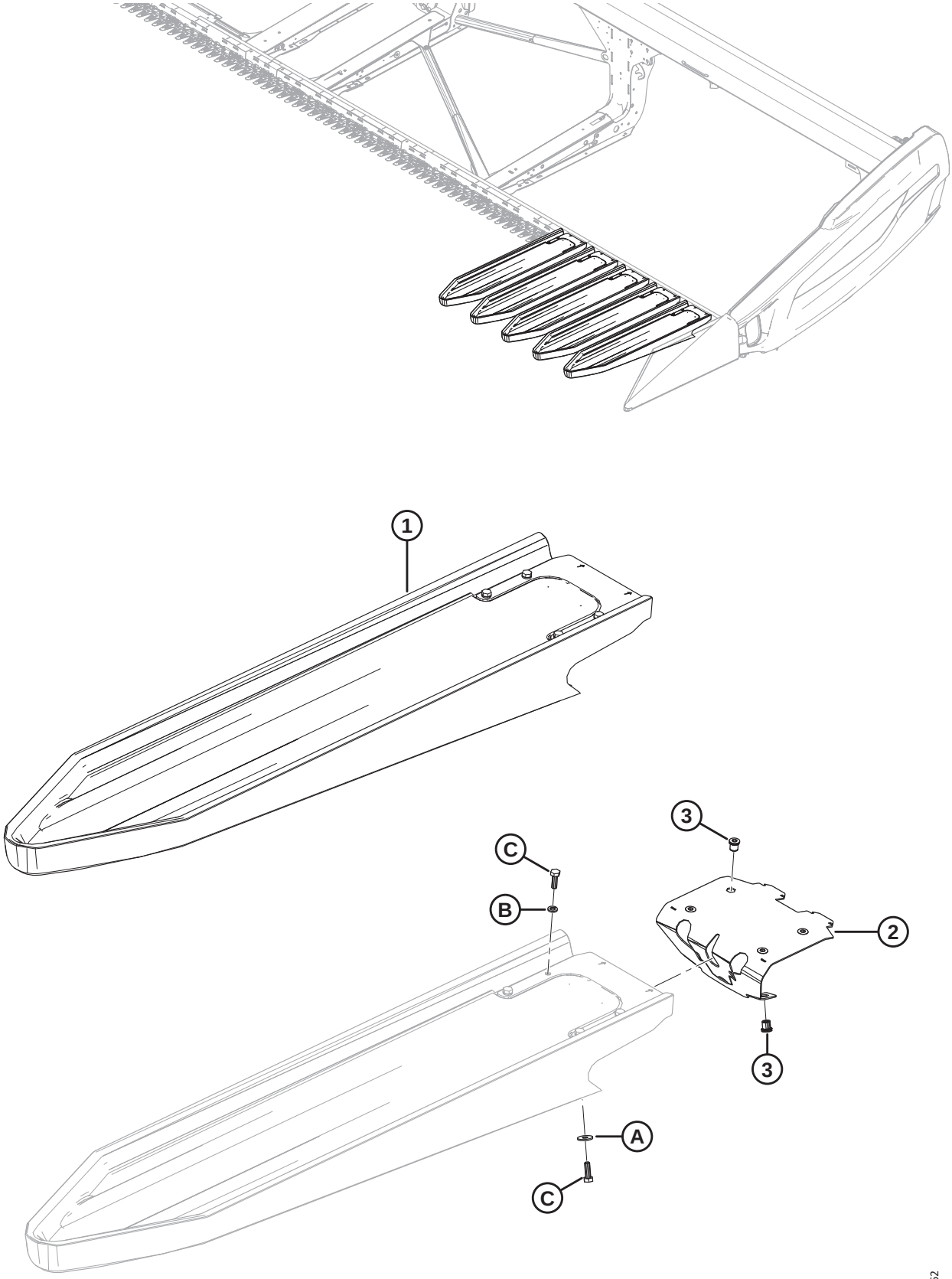

(OPTION) SUNFLOWER ATTACHMENT – PANS

NOTE:

The Sunflower Attachment is compatible with pointed knife guards only.

NOTE:

Kits (B-bundle numbers and C-collector numbers) can be purchased from MacDon Whole Goods only.

Ref	Part Number	Description	Qty	Serial Number
	B7303	KIT – 2 SERIES SUNFLOWER PAN (5 PANS) [284]		
	MAC119737	KIT – 2 SERIES SUNFLOWER PAN (5 PANS)		
1	MAC119529	PAN – SUNFLOWER QUICK ATTACH [285]	5	
2	MAC119726	ASSEMBLY – PAN LATCH [286]	5	
3	MAC252179	RIVNUT – M8 X 1.25 HEX0.7-3.8	30	
A	MAC184709	WASHER – FLAT LARGE M8-200HV		
B	MAC30716	WASHER – LOCK SPRING M8-CS-1055-1065-AA1J		
C	MAC184652	BOLT – HEX HD TFL M8 X 1.25 X 25-8.8-AA1J		

284. Kit contains 5 pans. Base kit (B7302) contains pans for D230 headers. D235 requires 1 pan kit, D241 requires 2 pan kits, and D245 requires 3 pan kits. Kits are available through Whole Goods only.
285. Includes latch assembly (MAC119726), clamp (NSS), six bolts (MAC184652), four lock spring washers (MAC30716), and two flat washers (MAC184709).
286. Includes six rivnuts (MAC252179).

109 (Option) Upper Cross Auger – Two-Piece Auger (D225, D230, D235, and D241)

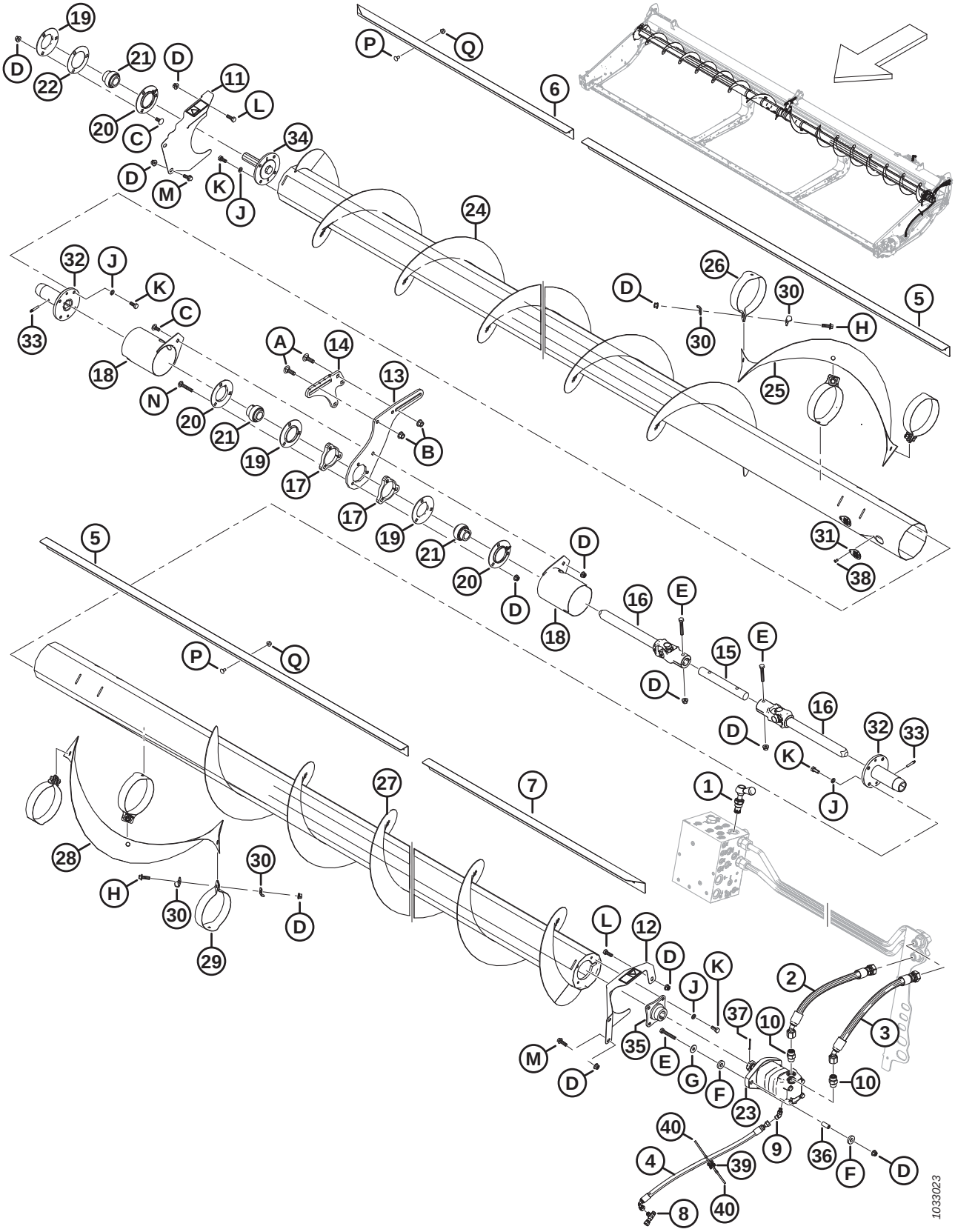

(OPTION) UPPER CROSS AUGER – TWO-PIECE AUGER (D225, D230, D235, AND D241)

NOTE:

Kits (B-bundle numbers and C-collector numbers) can be purchased from MacDon Whole Goods only.

Ref	Part Number	Description	Qty	Serial Number
	B6413	KIT – D225 UPPER CROSS AUGER [287]		
	B6414	KIT – D230 UPPER CROSS AUGER [287]		
	B6415	KIT – D235 UPPER CROSS AUGER [287]		
	B6416	KIT – D241 UPPER CROSS AUGER [287]		
1	MAC283571	VALVE – BYPASS	1	
	MAC245158	SEAL KIT		
2	MAC283061	HOSE – HYD	1	
3	MAC283062	HOSE – HYD	1	
4	MAC283077	HOSE – HYD	1	
5	MAC275521	DEFLECTOR – INBOARD 30, 35, AND 41 FT [288]	2	
6	MAC275530	DEFLECTOR – 25 FT	1	
	MAC275533	DEFLECTOR – RH OUTBOARD 30 FT	1	
	MAC275543	DEFLECTOR – RH OUTBOARD 35 FT	1	
	MAC275614	DEFLECTOR – RH OUTBOARD 41 FT	1	
7	MAC275530	DEFLECTOR – 25 FT	1	
	MAC275532	DEFLECTOR – LH OUTBOARD 30 FT	1	
	MAC275542	DEFLECTOR – LH OUTBOARD 35 FT	1	
	MAC275524	DEFLECTOR – LH OUTBOARD 41 FT	1	
8	MAC252621	FITTING – TEE HYD	1	
	MAC135957	O-RING – Ø1.78 X Ø7.65		
9	MAC252307	FITTING – ELBOW 45° HYD	1	
	MAC50223	O-RING – Ø1.83 X Ø8.92		
	MAC135957	O-RING – Ø1.78 X Ø7.65		
10	MAC184461	FITTING – ADAPTER HYD	2	
	MAC44210	O-RING – Ø2.46 X Ø19.18		
	MAC135867	O-RING – Ø1.78 X Ø15.60		
11	MAC233725	SHIELD – ASSEMBLY RH C/W DECAL	1	

287. Kits are available through Whole Goods only.
288. Inboard deflectors (MAC275521) are not used on D225 headers.

(OPTION) UPPER CROSS AUGER – TWO-PIECE AUGER (D225, D230, D235, AND D241)

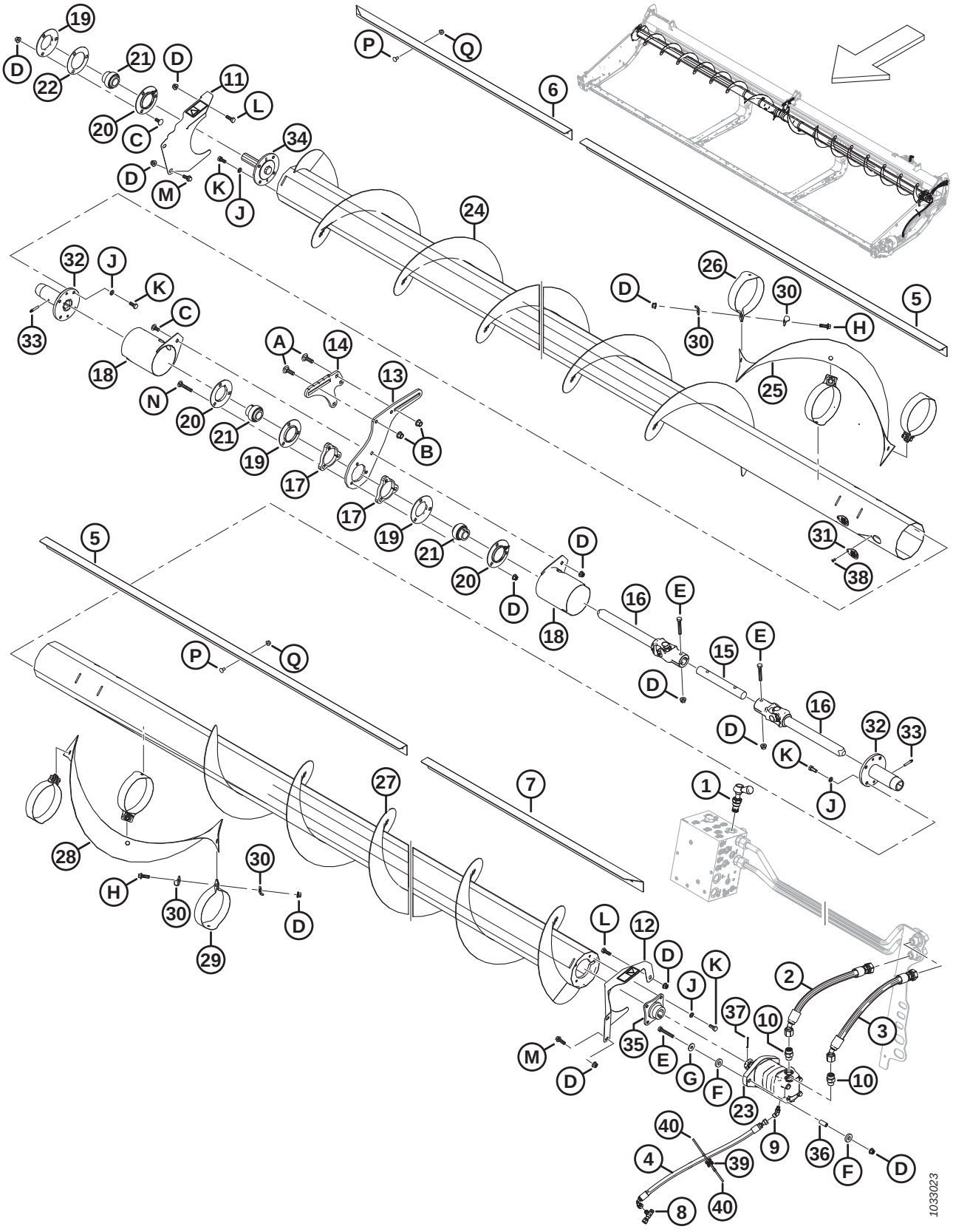

(OPTION) UPPER CROSS AUGER – TWO-PIECE AUGER (D225, D230, D235, AND D241)

Ref	Part Number	Description	Qty	Serial Number
12	MAC233724	SHIELD – ASSEMBLY LH C/W DECAL	1	
13	MAC233738	PLATE – SUPPORT, CENTER SLIDING	1	
14	MAC233736	PLATE – SUPPORT, CENTER FIXED	1	
15	MAC233519	SHAFT	1	
16	MAC233513	JOINT – UNIVERSAL	2	
17	MAC233450	PLATE – SPACER	2	
18	MAC233371	GUARD – WELDT	2	
19	MAC49306	FLANGE	3	
20	MAC30661	FLANGE	3	
21	MAC21859	BEARING – SPH OD EXT INNER RACE 1 3/16 BORE	3	
22	MAC172340	SHIM	1	
23	MAC283555	MOTOR – HYD-100 CC SAE B	1	
	MAC174304	SEAL KIT – EATON 2000 MOTOR		
	MAC137375	NUT – SLTD JAM 1.0-20 UNEF		
24	MAC233654	AUGER – WELDT RH 25 FT	1	
	MAC233656	AUGER – WELDT RH 30 FT	1	
	MAC233658	AUGER – WELDT RH 35 FT	1	
	MAC233660	AUGER – WELDT RH 41 FT	1	
25	MAC233705	FLIGHTING – RH	1	
26	MAC233621	STRAP – RH	3	
27	MAC233655	AUGER – WELDT LH 25 FT	1	
	MAC233657	AUGER – WELDT LH 30 FT	1	
	MAC233659	AUGER – WELDT LH 35 FT	1	
	MAC233661	AUGER – WELDT LH 41 FT	1	
28	MAC233706	FLIGHTING – LH	1	
29	MAC233622	STRAP – LH	3	
30	MAC233623	PLATE	12	
31	MAC233625	COVER	4	
32	MAC233514	HUB – WELDT UCA SLIDING	2	
33	MAC30934	FITTING – 1/4-28 TAPER THD (LUBRICATION)	2	
34	MAC233447	HUB – MACHINED	1	
35	MAC233443	HUB – WELDT, UCA 1.25 TAPER SFAFT	1	

(OPTION) UPPER CROSS AUGER – TWO-PIECE AUGER (D225, D230, D235, AND D241)

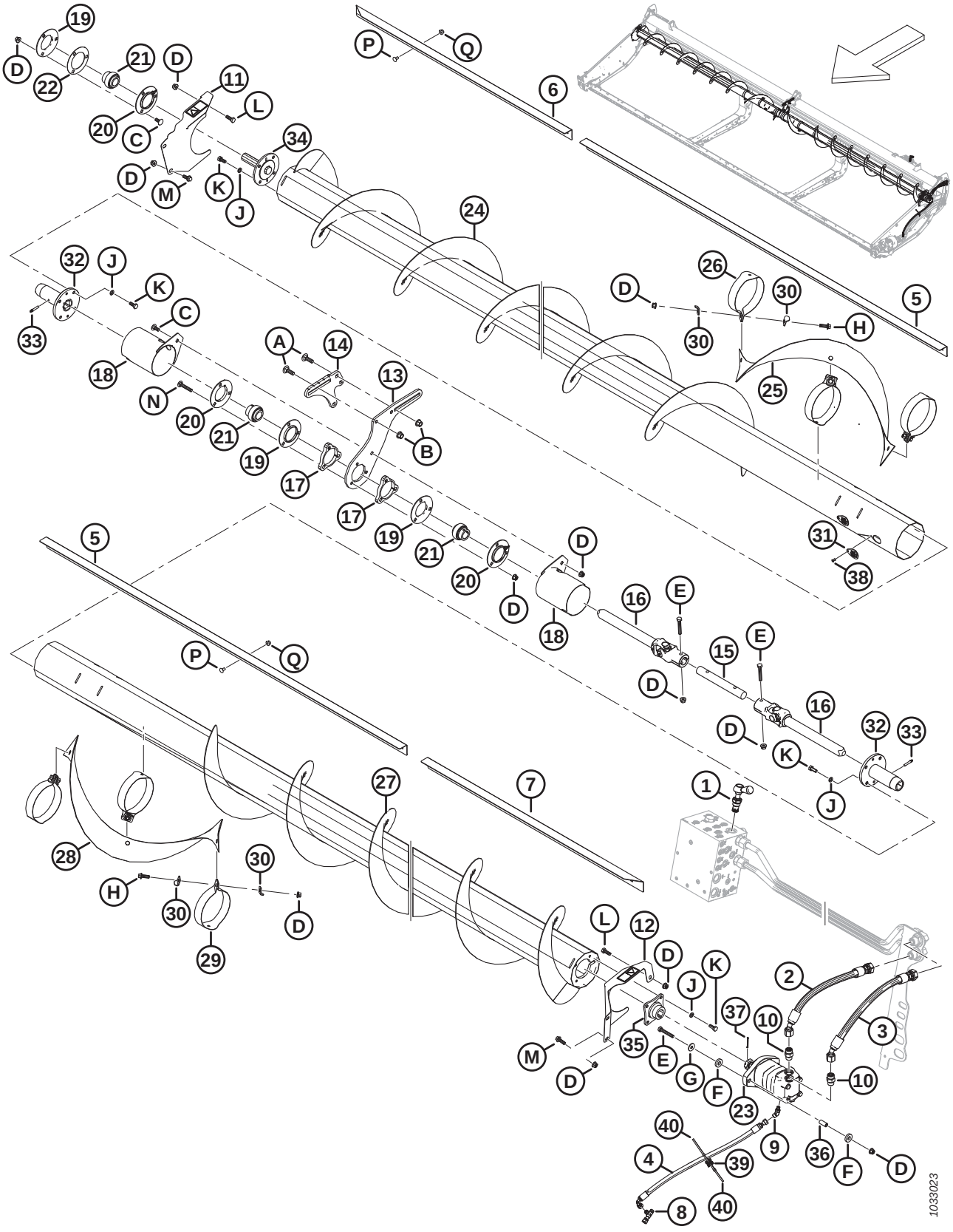

(OPTION) UPPER CROSS AUGER – TWO-PIECE AUGER (D225, D230, D235, AND D241)

Ref	Part Number	Description	Qty	Serial Number
36	MAC233445	SPACER	2	
37	MAC18606	PIN – COTTER 1/8 DIA X 1.5 ZP	1	
38	MAC18768	RIVET – BLIND Ø0.188 IN. X 0.251 TO 0.375 GRIP RANGE	4	
39	MAC134442	SPACER – DUAL SWIVEL SADDLE	1	
40	MAC21763	FASTENER – CABLE TIE, BLACK	2	
A	MAC135900	BOLT – RHSN TFL M12 X 1.75 X 40-8.8-ZINC		
B	MAC136431	NUT – HEX FLG CTR LOC M12 X 1.75-10		
C	MAC135785	BOLT – RHSN M10 X 1.5 X 25-8.8-AA1J		
D	MAC135799	NUT – HEX FLG CTR LOC M10 X 1.5-10		
E	MAC108172	BOLT – HEX HD M10 X 1.5 X 65-8.8-AA1J		
F	MAC233446	WASHER – RUBBER		
G	MAC184712	WASHER – FLAT LARGE M10-200HV		
H	MAC184665	BOLT – HEX FLG HD M10 X 1.5 X 30-10.9-AA1J		
J	MAC30632	WASHER – LOCK SPRING M10		
K	MAC30627	BOLT – HEX HD TFL M10 X 1.5 X 25-8.8-A3L		
L	MAC184661	BOLT – HEX HD TFL M10 X 1.5 X 30-8.8-AA1J		
M	MAC184665	BOLT – HEX FLG HD M10 X 1.5 X 30-10.9-AA1J		
N	MAC136113	BOLT – RHSN M10 X 1.5 X 60-8.8-AA1J		
P	MAC191489	BOLT – RHSSN TFL M8 X 1.25 X 16-8.8-AA1J		
Q	MAC135337	NUT – HEX FLG CTR LK M8 X 1.25-8-AA1J		

110 (Option) Upper Cross Auger – Three-Piece Auger (D245)

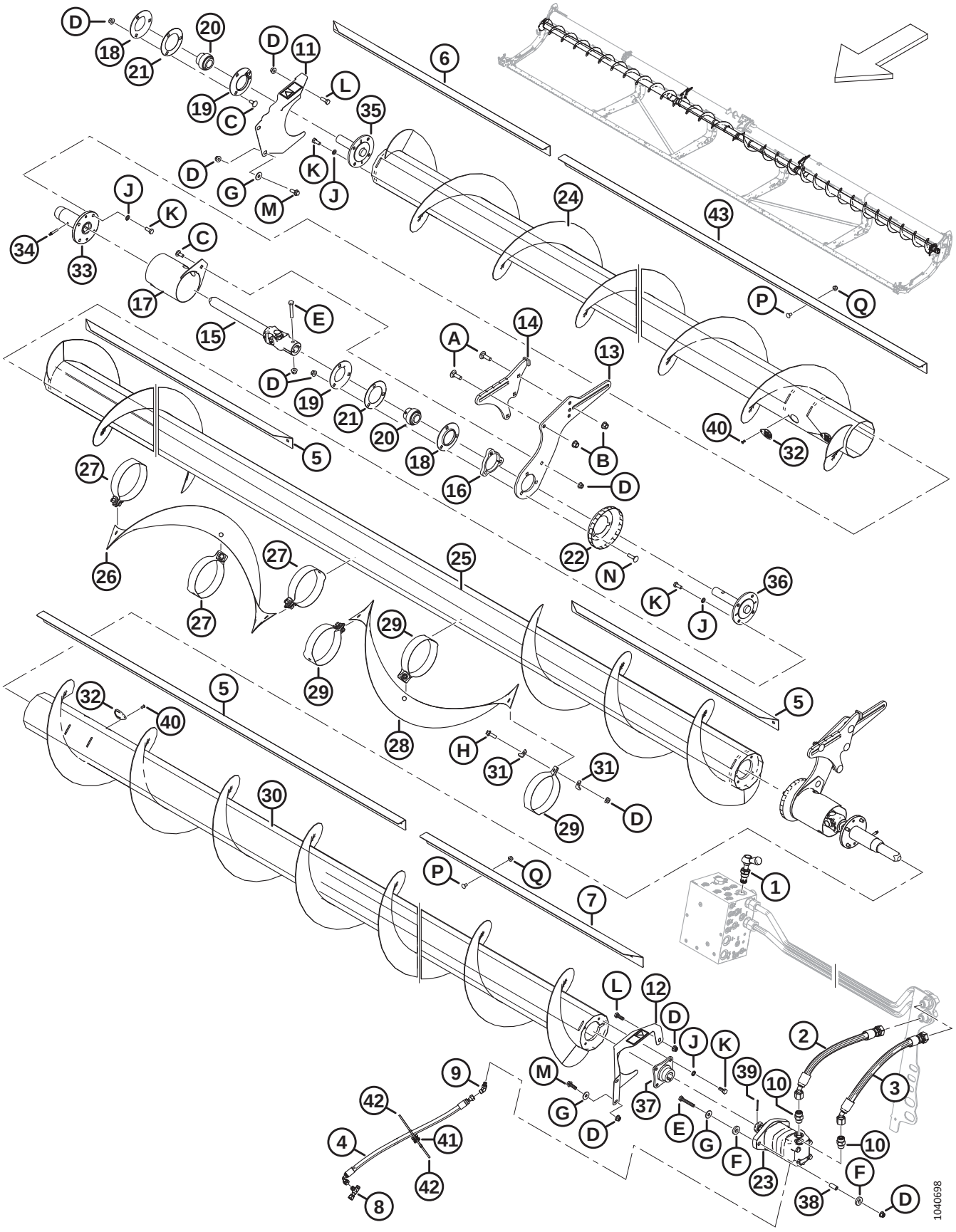

(OPTION) UPPER CROSS AUGER – THREE-PIECE AUGER (D245)

NOTE:

Kits (B-bundle numbers and C-collector numbers) can be purchased from MacDon Whole Goods only.

Ref	Part Number	Description	Qty	Serial Number
	B6418	KIT – D245 UPPER CROSS AUGER [289]		
1	MAC283571	VALVE – BYPASS	1	
	MAC245158	SEAL KIT		
2	MAC283061	HOSE – HYD	1	
3	MAC283062	HOSE – HYD	1	
4	MAC283077	HOSE – HYD	1	
5	MAC275692	DEFLECTOR – INBOARD 45 FT	2	
6	MAC275543	DEFLECTOR – RH OUTBOARD 45 FT	1	
7	MAC275542	DEFLECTOR – LH OUTBOARD 45 FT	1	
8	MAC252621	FITTING – TEE HYD	1	
	MAC135957	O-RING – Ø1.78 X Ø7.65		
9	MAC252307	FITTING – ELBOW 45° HYD	1	
	MAC50223	O-RING – Ø1.83 X Ø8.92		
	MAC135957	O-RING – Ø1.78 X Ø7.65		
10	MAC184461	FITTING – ADAPTER HYD	2	
	MAC44210	O-RING – Ø2.46 X Ø19.18		
	MAC135867	O-RING – Ø1.78 X Ø15.60		
11	MAC233725	SHIELD – ASSEMBLY RH C/W DECAL	1	
12	MAC233724	SHIELD – ASSEMBLY LH C/W DECAL	1	
13	MAC233741	PLATE – SUPPORT, CENTER SLIDING	2	
14	MAC233740	SUPPORT – WELDMENT, CENTER FIXED	2	
15	MAC233513	JOINT – UNIVERSAL	2	
16	MAC233450	PLATE – SPACER	2	
17	MAC233371	GUARD – WELDT	2	
18	MAC49306	FLANGE	2	
19	MAC30661	FLANGE	2	
20	MAC21859	BEARING – SPH OD EXT INNER RACE 1 3/16 BORE	3	
21	MAC172340	SHIM	2	

289. Kits are available through Whole Goods only.

(OPTION) UPPER CROSS AUGER – THREE-PIECE AUGER (D245)

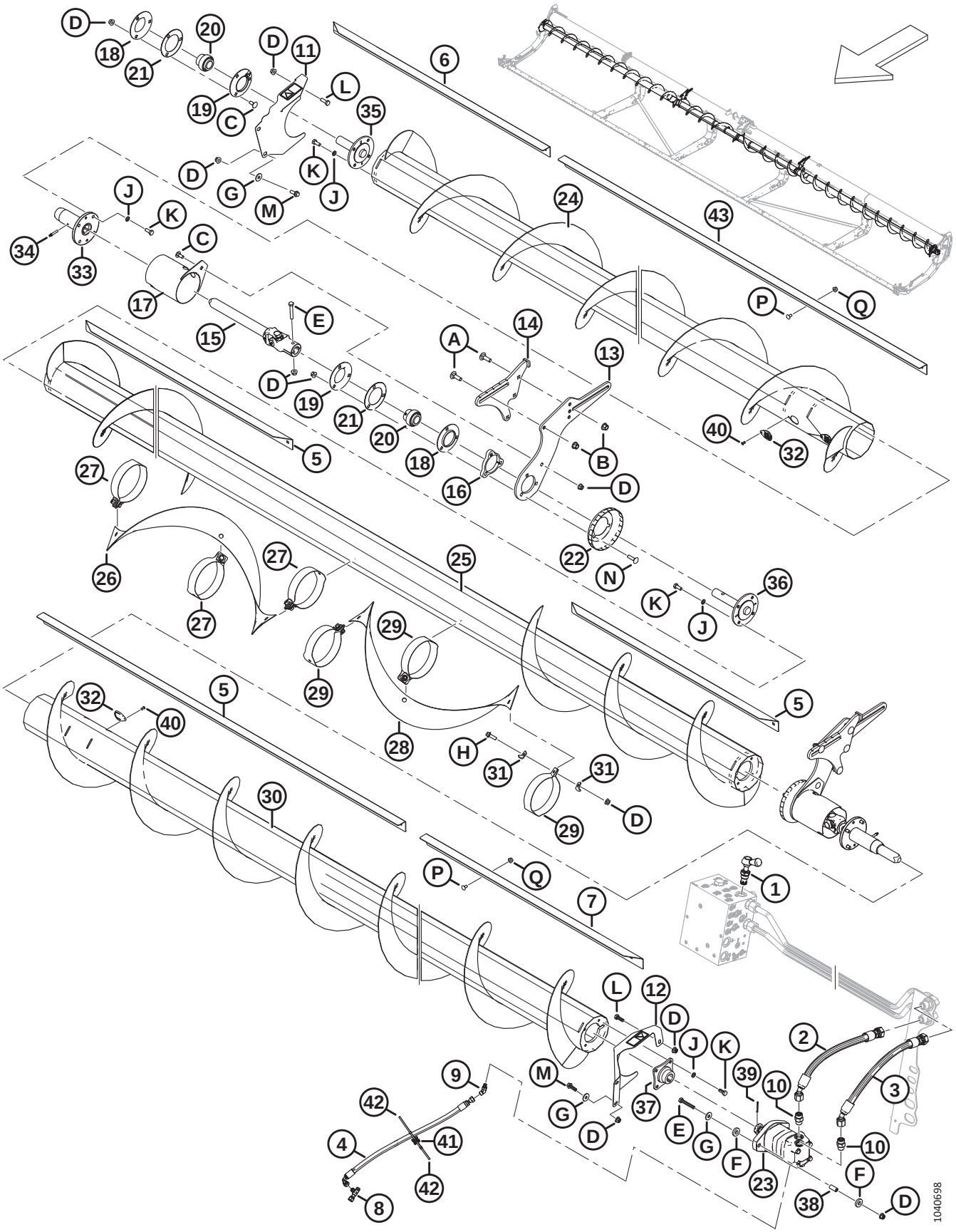

(OPTION) UPPER CROSS AUGER – THREE-PIECE AUGER (D245)

Ref	Part Number	Description	Qty	Serial Number
22	MAC233552	SHIELD – FORMED	2	
23	MAC283555	MOTOR – HYD-100 CC SAE B	1	
	MAC174304	SEAL KIT – EATON 2000 MOTOR		
	MAC137375	NUT – SLTD JAM 1.0-20 UNEF		
24	MAC233662	AUGER – WELDT RH 45 FT	1	
25	MAC233669	AUGER – WELDT CENTER 45 FT	1	
26	MAC233705	FLIGHTING – RH	1	
27	MAC233621	STRAP – RH	3	
28	MAC233706	FLIGHTING – LH	1	
29	MAC233622	STRAP – LH	3	
30	MAC233663	AUGER – WELDT LH 45 FT	1	
31	MAC233623	PLATE	12	
32	MAC233625	COVER	4	
33	MAC233514	HUB – WELDT, UCA SLIDING	2	
34	MAC30934	FITTING – 1/4-28 TAPER THD (LUBRICATION)	2	
35	MAC233447	HUB – MACHINED, UCA IDLE END	1	
36	MAC233516	HUB – MACHINED, UCA CENTER	2	
37	MAC233443	HUB – WELDT, UCA 1.25 TAPER SFAFT	1	
38	MAC233445	SPACER	2	
39	MAC18606	PIN – COTTER 1/8 DIA X 1.5 ZP	1	
40	MAC18768	RIVET – BLIND Ø0.188 IN. X 0.251 TO 0.375 GRIP RANGE	4	
41	MAC134442	SPACER – DUAL SWIVEL SADDLE	1	
42	MAC21763	FASTENER – CABLE TIE, BLACK	2	
43	MAC275691	DEFLECTOR – MIDDLE	2	
A	MAC135900	BOLT – RHSN TFL M12 X 1.75 X 40-8.8-ZINC		
B	MAC136431	NUT – HEX FLG CTR LOC M12 X 1.75-10		
C	MAC135785	BOLT – RHSN M10 X 1.5 X 25-8.8-AA1J		
D	MAC135799	NUT – HEX FLG CTR LOC M10 X 1.5-10		
E	MAC108172	BOLT – HEX HD M10 X 1.5 X 65-8.8-AA1J		
F	MAC233446	WASHER – RUBBER		
G	MAC184712	WASHER – FLAT LARGE M10-200HV		

(OPTION) UPPER CROSS AUGER – THREE-PIECE AUGER (D245)

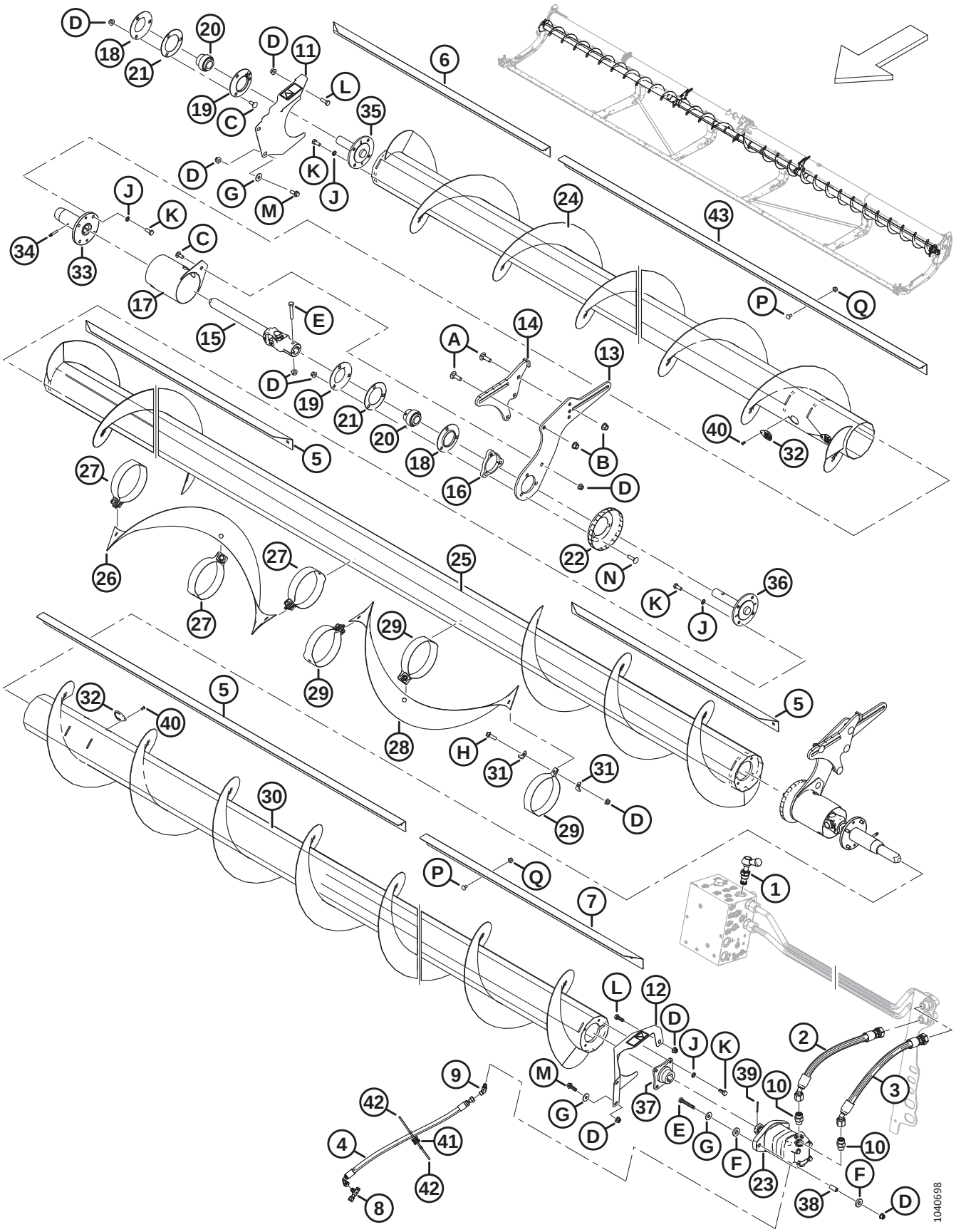

(OPTION) UPPER CROSS AUGER – THREE-PIECE AUGER (D245)

Ref	Part Number	Description	Qty	Serial Number
H	MAC184665	BOLT – HEX FLG HD M10 X 1.5 X 30-10.9-AA1J		
J	MAC30632	WASHER – LOCK SPRING M10		
K	MAC30627	BOLT – HEX HD TFL M10 X 1.5 X 25-8.8-A3L		
L	MAC184661	BOLT – HEX HD TFL M10 X 1.5 X 30-8.8-AA1J		
M	MAC184665	BOLT – HEX FLG HD M10 X 1.5 X 30-10.9-AA1J		
N	MAC152732	BOLT – RHSN M10 X 1.5 X 40-8.8-AA1J		
P	MAC191489	BOLT – RHSSN TFL M8 X 1.25 X 16-8.8-AA1J		
Q	MAC135337	NUT – HEX FLG CTR LK M8 X 1.25-8-AA1J		

111 (Option) VertiBlade™ Vertical Knife Kit

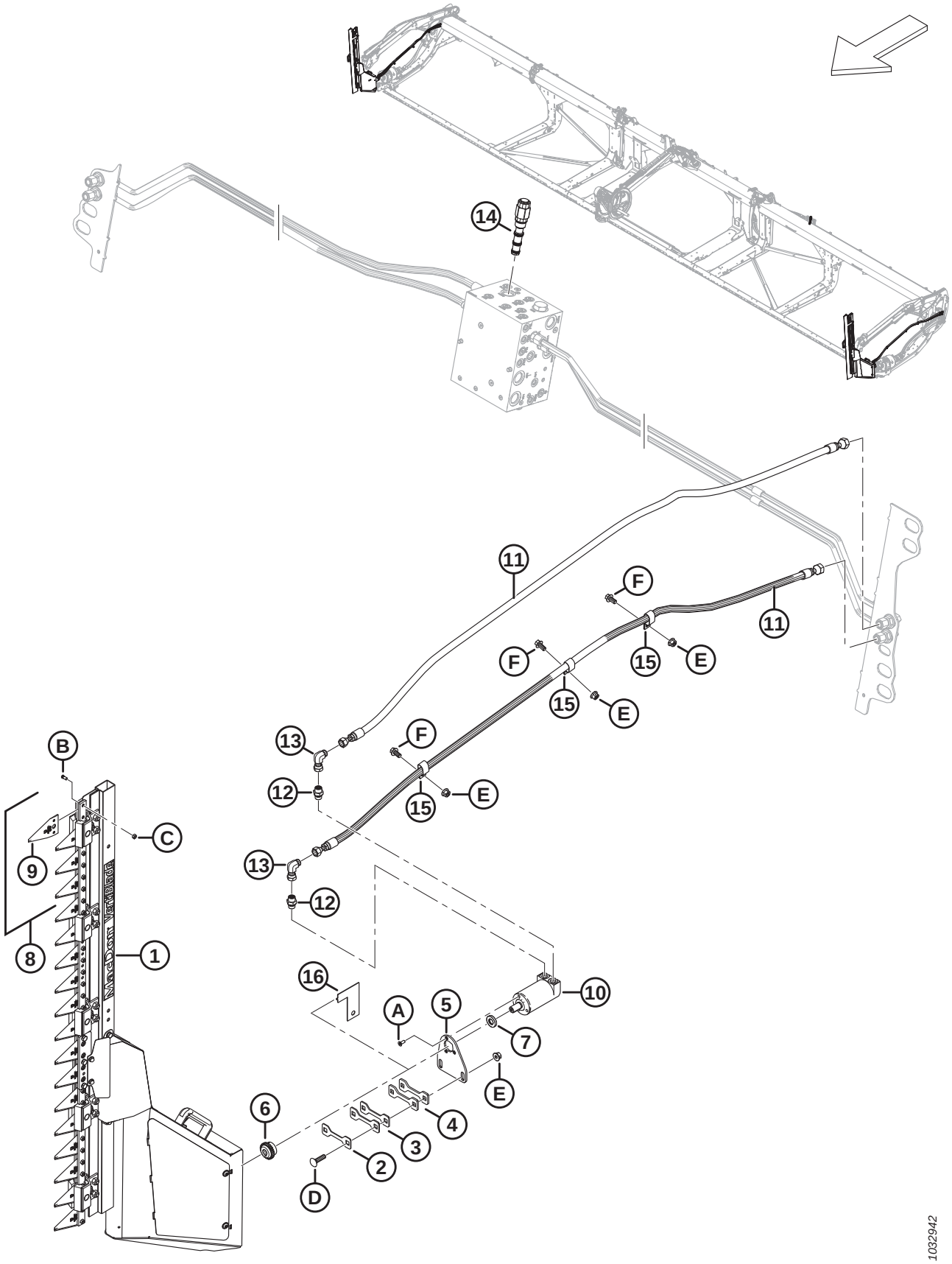

(OPTION) VERTIBLADE™ VERTICAL KNIFE KIT

NOTE:

Kits (B-bundle numbers and C-collector numbers) can be purchased from MacDon Whole Goods only.

Ref	Part Number	Description	Qty	Serial Number
	B7029	KIT – VERTIBLADE VERTICAL KNIVES [290]		
1	MAC313502	KNIFE – VERTICAL ASSEMBLY, RH [291]	1	
	MAC313501	KNIFE – VERTICAL ASSEMBLY, LH [291]	1	
2	MAC313750	SHIM – 2 MM THK	A/R	
3	MAC313749	SHIM – 3 MM THK	A/R	
4	MAC313745	SHIM – 4.5 MM THK	A/R	
5	MAC313744	SUPPORT – MOTOR VERTICAL KNIFE	2	
6	MAC313808	HUB	2	
7	MAC313801	SPACER	2	
8	MAC313797	KIT – VERTICAL KNIFE SECTIONS [292]	A/R	
9	MAC313788	SECTION – VERTICAL KNIFE	A/R	
10	MAC304611	MOTOR – HYDRAULIC	2	
11	MAC283066	HOSE – HYD	4	
12	MAC136653	FITTING – ADAPTER	4	
	MAC135865	O-RING – Ø1.78 X Ø9.25		
	MAC136654	O-RING – 1.50 X 2.10 X14.70		
13	MAC136249	FITTING – ELBOW 90° HYD	4	
14	MAC283008	VALVE – PRIORITY FLOW REG (FRRV)	1	
	MAC283579	SEAL KIT		
15	MAC135235	CLAMP – DOUBLE HOSE INSULATED	6	
16	MAC313780	GUIDE – VERTICAL KNIFE [293]	1	
A	MAC320220	SCREW – TORX CSK HD TFL M6 X 1 X 16-SPCL-8.8-ZINC		
B	MAC313789	SCREW – VERTICAL KNIFE SECTION		

290. Kits are available through Whole Goods only.
291. For vertical knife components, refer to Section *112 (Option) VertiBlade™ Vertical Knife Components, page 311*.
292. The kit includes four vertical knife sections (MAC313788), eight vertical knife section screws (MAC313789), and eight vertical knife section nuts (MAC313790).
293. The guide is used as a tool to determine the correct number of shims (MAC313750, MAC313749, and MAC313745) required to fill the gap between the frame plate and guide. The guide is removed after determining gap. See installation instructions for more details.

(OPTION) VERTIBLADE™ VERTICAL KNIFE KIT

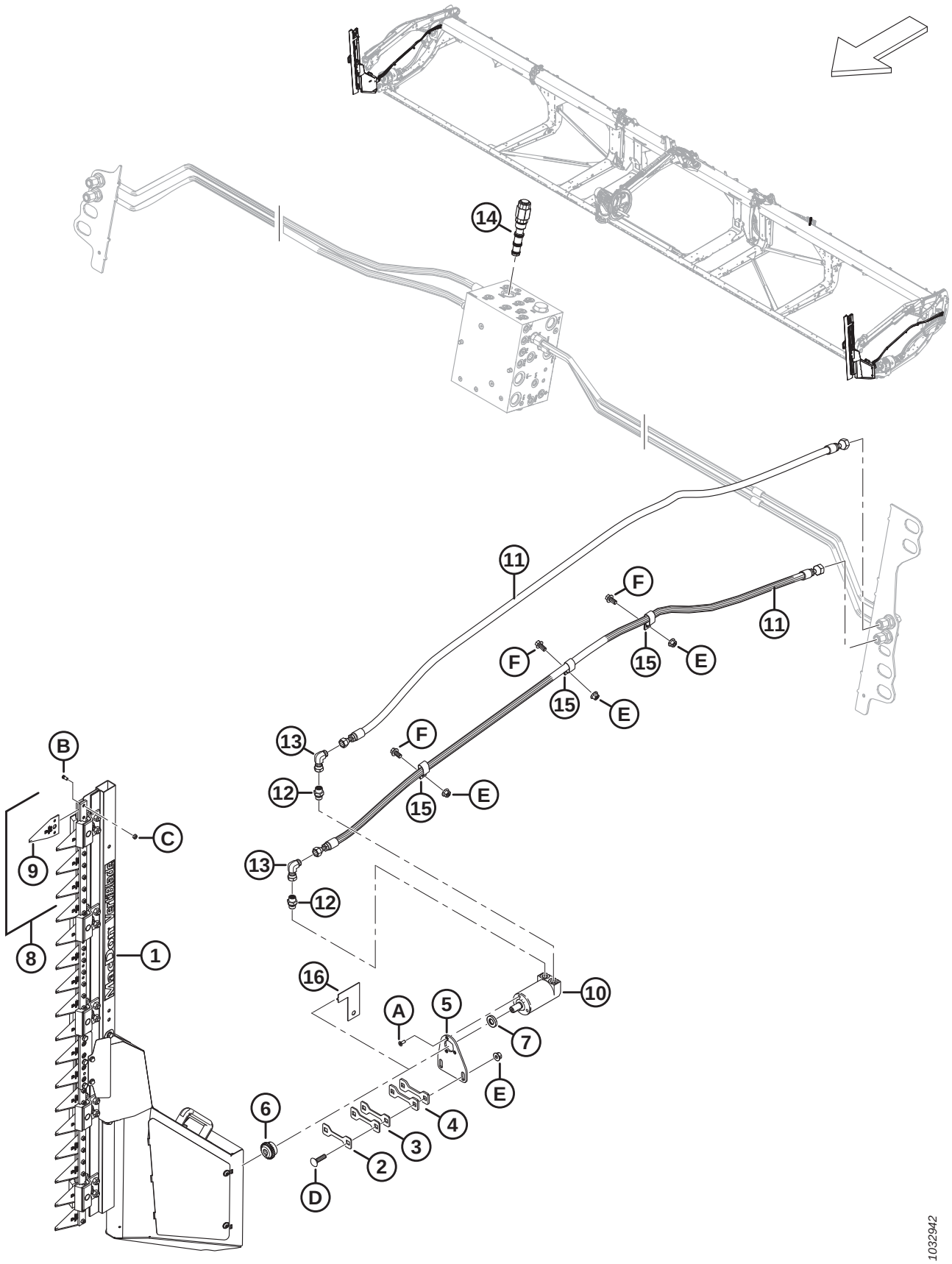

(OPTION) VERTIBLADE™ VERTICAL KNIFE KIT

Ref	Part Number	Description	Qty	Serial Number
C	MAC313790	NUT – VERTICAL KNIFE SECTION		
D	MAC152732	BOLT – RHSN M10 X 1.5 X 40-8.8-AA1J		
E	MAC135799	NUT – HEX FLG CTR LOC M10 X 1.5-10		
F	MAC152655	BOLT – HEX FLG HD M10 X 1.5 X 20-8.8-AA1J		

112 (Option) VertiBlade™ Vertical Knife Components

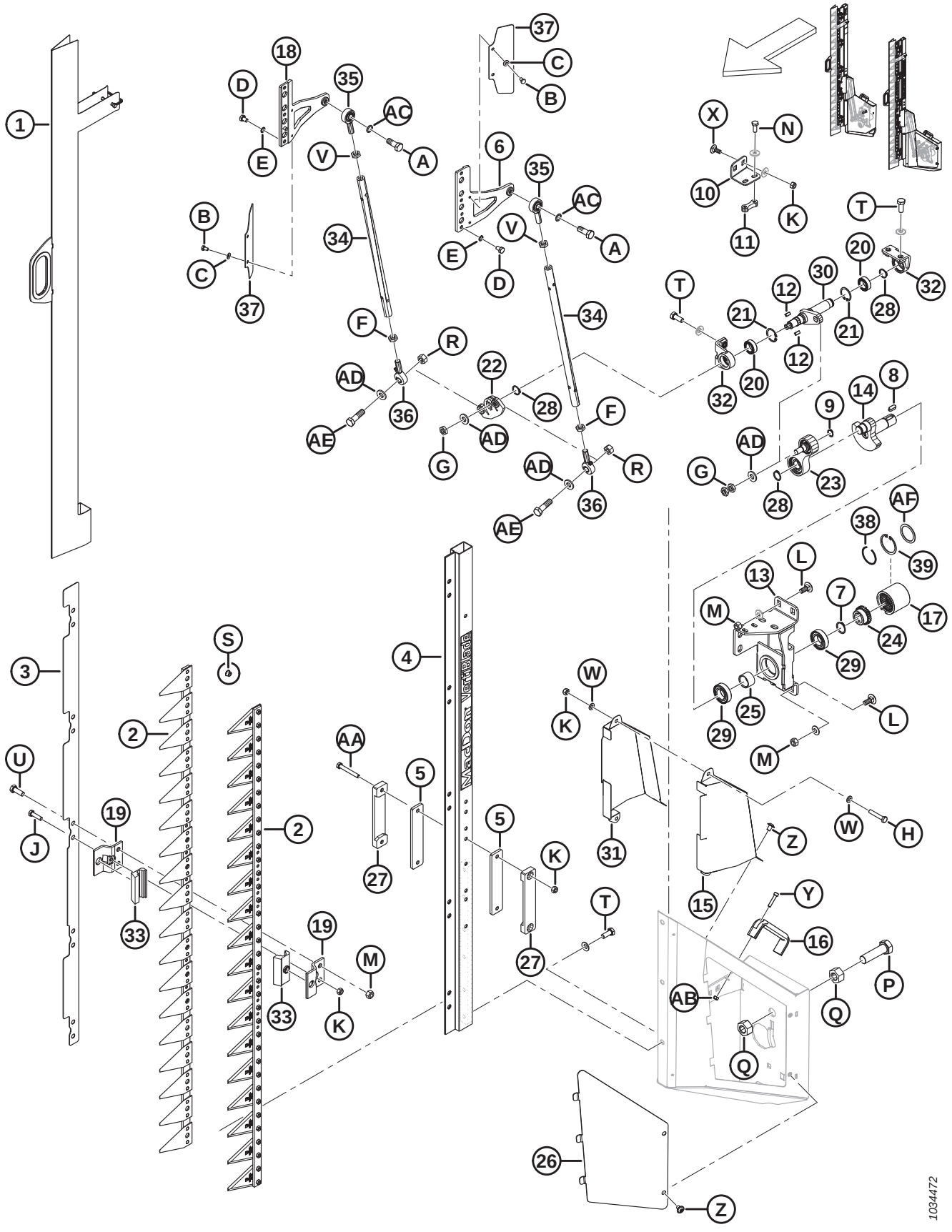

(OPTION) VERTIBLADE™ VERTICAL KNIFE COMPONENTS

Ref	Part Number	Description	Qty	Serial Number
	MAC313501	KNIFE – VERTICAL ASSEMBLY, LH		
	MAC313502	KNIFE – VERTICAL ASSEMBLY, RH		
1	MAC313798	SHIELD – VERTICAL KNIFE	2	
2	MAC313799	KNIFE ASSY – VERTICAL KNIFE	4	
3	MAC313800	PLATE – ADAPTER POSITIONING	2	
4	MAC313802	BAR	2	
5	MAC313805	GUIDE – INNER	4	
6	MAC313807	KNIFEHEAD – LH	2	
7	MAC313810	RING – RETAINING EXTERNAL	2	
8	MAC313815	KEY	2	
9	MAC313819	RING – RETAINING EXTERNAL	2	
10	MAC313882	BRACKET – CRANK DRIVE RH	1	
	MAC313820	BRACKET – CRANK DRIVE LH	1	
11	MAC313821	PLATE – THREADED	2	
12	MAC313824	KEY	4	
13	MAC313884	SUPPORT – RH DRIVE WELDMENT	1	
	MAC313825	SUPPORT – LH DRIVE WELDMENT	1	
14	MAC313828	SHAFT – CRANK	2	
15	MAC313836	COVER – RH KNIFE OUTER	2	
	MAC313835	COVER – LH KNIFE OUTER	2	
16	MAC313841	HANDLE	2	
17	MAC313809	COUPLING	2	
18	MAC313869	KNIFEHEAD – RH	2	
19	MAC313804	GUIDE – KNIFE	20	
20	MAC313817	BEARING – ANGULAR	4	
21	MAC313818	RING – RETAINING INTERNAL	4	
22	MAC313826	ARM – OSCILLATING	2	
23	MAC313827	PITTMAN ASSEMBLY	2	
24	MAC313813	HUB	2	
25	MAC313814	SLEEVE – CRANKSHAFT SPACER	2	
26	MAC313834	COVER – RH SIDE	1	
	MAC313833	COVER – LH SIDE	1	
27	MAC313806	GUIDE – OUTER	4	

(OPTION) VERTIBLADE™ VERTICAL KNIFE COMPONENTS

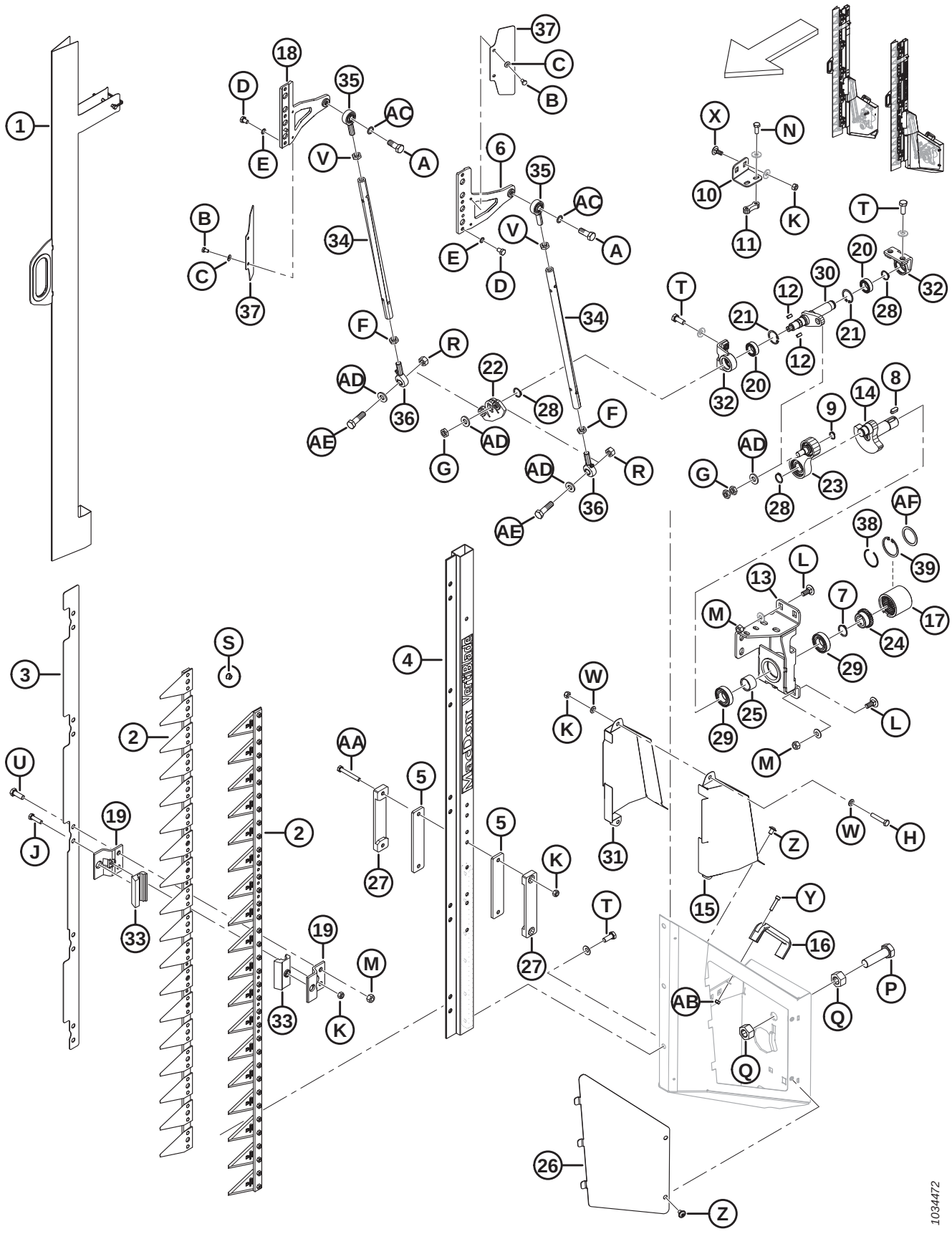

(OPTION) VERTIBLADE™ VERTICAL KNIFE COMPONENTS

Ref	Part Number	Description	Qty	Serial Number
28	MAC313811	RING – RETAINING EXTERNAL	6	
29	MAC313812	BEARING	4	
30	MAC313883	SHAFT – DRIVE, RH	1	
	MAC313822	SHAFT – DRIVE, LH	1	
31	MAC313838	COVER – RH KNIFE INNER	1	
	MAC313837	COVER – LH KNIFE INNER	1	
32	MAC313816	SUPPORT – OUTPUT SHAFT	4	
33	MAC313803	GUIDE	20	
34	MAC313829	TUBE	4	
35	MAC313830	JOINT – BALL	4	
36	MAC313831	JOINT – BALL BEARING	4	
37	MAC313839	DEFLECTOR	4	
38	MAC340077	RING – RETAINING [294]	1	
39	MAC340078	RING – INTERNAL [294]	1	
A	MAC313847	SCREW – M12 X 1.75 X 32		
B	MAC136561	BOLT – HEX HD TFL M6 X 1 X 10-8.8-AA1J		
C	MAC30631	WASHER – LOCK SPRING M6		
D	MAC313848	SCREW – HEX M8 X 1 X 12		
E	MAC313849	WASHER – LOCK SCHNORR		
F	MAC313844	NUT – HEX, M12 X 1.75 LH THD LOCK		
G	MAC313845	NUT – HEX M12 X 1.5		
H	MAC30660	BOLT – HEX HD M8 X 1.25 X 45-8.8-AA1J		
J	MAC50140	BOLT – HEX HD M8 X 1.25 X 30-8.8-AA1J		
K	MAC135337	NUT – HEX FLG CTR LK M8 X 1.25-8-AA1J		
L	MAC135785	BOLT – RHSN M10 X 1.5 X 25-8.8-AA1J		
M	MAC135799	NUT – HEX FLG CTR LOC M10 X 1.5-10		
N	MAC136302	BOLT – HEX SER FLG HD TFL M8 X 1.25 X 20-8.8-ZINC		
P	MAC136339	BOLT – HEX HD FINE TFL M20 X 1.5 X 70 X 8.8-ZINC		
Q	MAC136342	NUT – HEX FINE M20 X 1.5 X 10-AA3L		
R	MAC136759	NUT – HEX CTR LOC M12 X 1.75-8-AA1J		

294. Service part for coupling (MAC313809).

(OPTION) VERTIBLADE™ VERTICAL KNIFE COMPONENTS

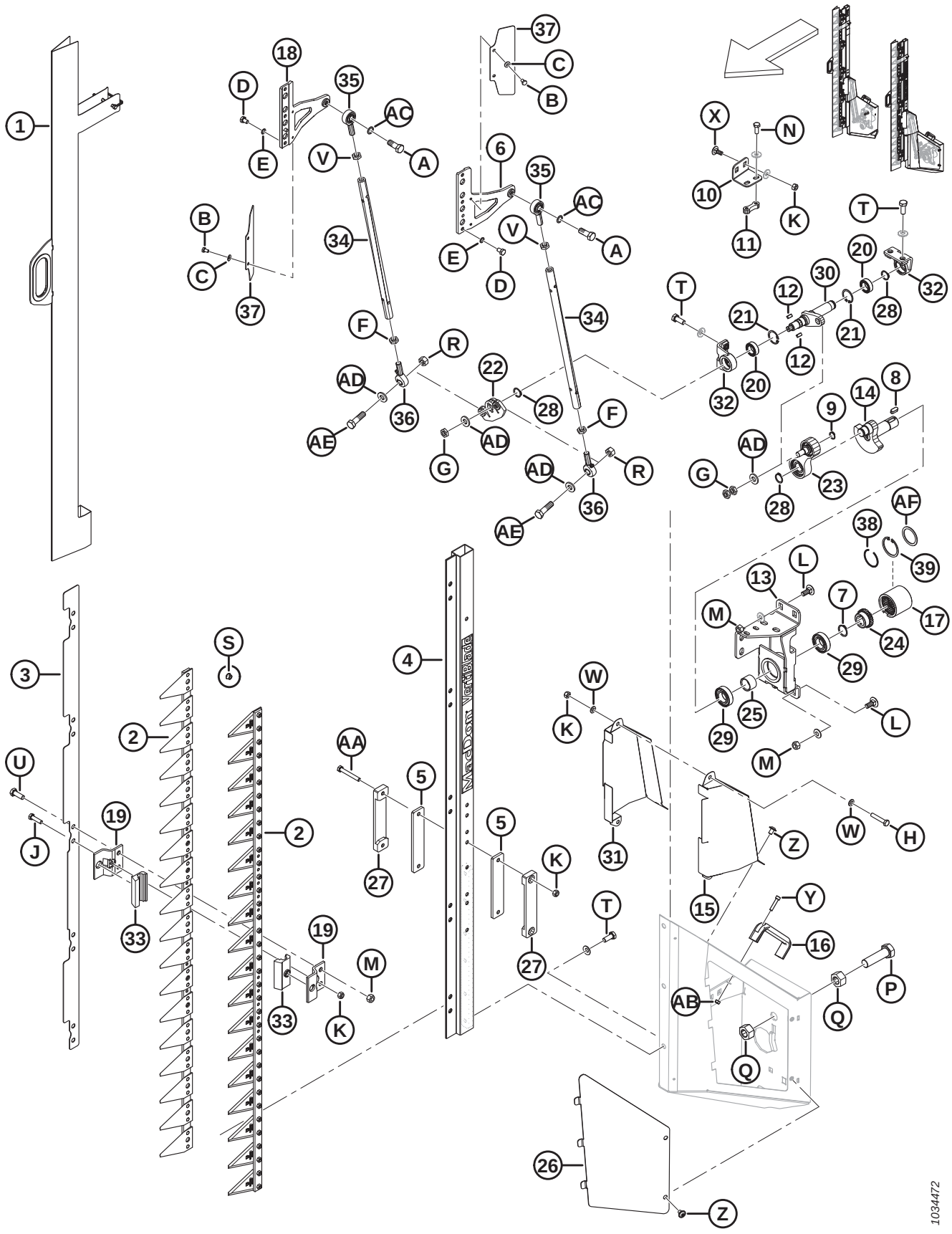

(OPTION) VERTIBLADE™ VERTICAL KNIFE COMPONENTS

Ref	Part Number	Description	Qty	Serial Number
S	MAC152668	NUT – HEX FLG CTR LOC M6 X 1-8		
T	MAC152670	BOLT – HEX FLG HD M10 X 1.5 X 20-SPC-8.8-AA1J		
U	MAC184661	BOLT – HEX HD TFL M10 X 1.5 X 30-8.8-AA1J		
V	MAC184696	NUT – HEX THIN M12 X 1.75-05-AA1J		
W	MAC184708	WASHER – FLAT M8-200HV-AA1J		
X	MAC197171	BOLT – RHSN M8 X 1.25 X 20-8.8-ZINC		
Y	MAC252236	SCREW – HEX SOC M6 X 1 X 25-10.9 AA1T		
Z	MAC252292	SCREW – HEX SOC BTN HD M8 X 1.25 X 12-10.9-AA1J		
AA	MAC252398	BOLT – HEX HD M8 X 1.25 X 60-8.8-ZINC		
AB	MAC136773	NUT – HEX CTR LOC M6 X 1-8-AA1J		
AC	MAC313846	WASHER – LOCK SCHNORR		
AD	MAC313832	WASHER		
AE	MAC313843	SCREW – M12 X 1.75 X 43		
AF	MAC340076	WASHER [294]		

113 (Option) VertiBlade™ Vertical Knife Hydraulics

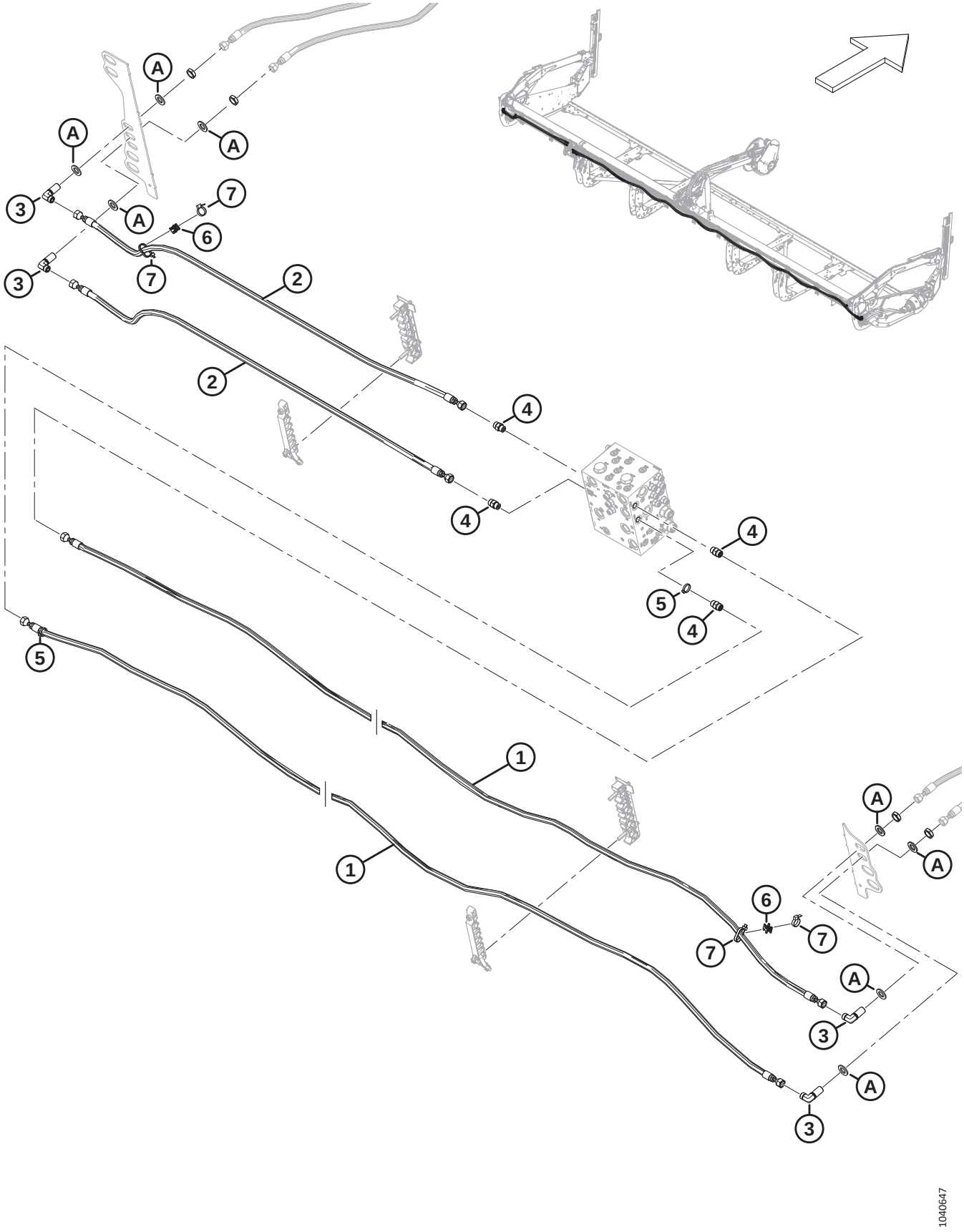

(OPTION) VERTIBLADE™ VERTICAL KNIFE HYDRAULICS

NOTE:

Kits (B-bundle numbers and C-collector numbers) can be purchased from MacDon Whole Goods only.

Ref	Part Number	Description	Qty	Serial Number
	B7339	KIT – 25 FT. VERTIBLADE PLUMBING PKG [295]		
	B7127	KIT – 30 FT. VERTIBLADE PLUMBING PKG [295]		
	B7128	KIT – 35 FT. VERTIBLADE PLUMBING PKG [295]		
	B7130	KIT – 41 FT. VERTIBLADE PLUMBING PKG [295]		
	B7410	KIT – 45 FT. VERTIBLADE PLUMBING PKG [295]		
1	MAC323357	HOSE – HYDRAULIC (D225)	2	
	MAC311807	HOSE – HYDRAULIC (D230)	2	
	MAC311810	HOSE – HYDRAULIC (D235)	2	
	MAC311815	HOSE – HYDRAULIC (D241)	2	
	MAC311860	HOSE – HYDRAULIC (D245)	2	
2	MAC323373	HOSE – HYDRAULIC (D225)	2	
	MAC311808	HOSE – HYDRAULIC (D230)	2	
	MAC311811	HOSE – HYDRAULIC (D235)	2	
	MAC311814	HOSE – HYDRAULIC (D241)	2	
	MAC311816	HOSE – HYDRAULIC (D245)	2	
3	MAC136244	FITTING – ELBOW 90° BULKHEAD HYD [296]	4	
	MAC135866	O-RING – Ø1.78 X Ø12.42		
4	MAC135780	FITTING – ADAPTER	4	
	MAC44209	O-RING – Ø2.21 X Ø16.36		
	MAC135866	O-RING – Ø1.78 X Ø12.42		
5	MAC252795	FASTENER – CABLE TIE, PINK	4	
6	MAC134442	SPACER – DUAL SWIVEL SADDLE	2	
7	MAC30753	FASTENER – CABLE TIE, BLACK	4	
	MAC136438	FITTING – ELBOW 45° HYD (NOT ILLUSTRATED) [297]	2	

295. The kit includes all listed parts to make the header power divider (VertiBlade™) ready if not factory configured. Kits are available through Whole Goods only.
296. The fitting includes a securing nut.
297. Included in the kit but is used only on headers configured for M-Series windrowers.

(OPTION) VERTIBLADE™ VERTICAL KNIFE HYDRAULICS

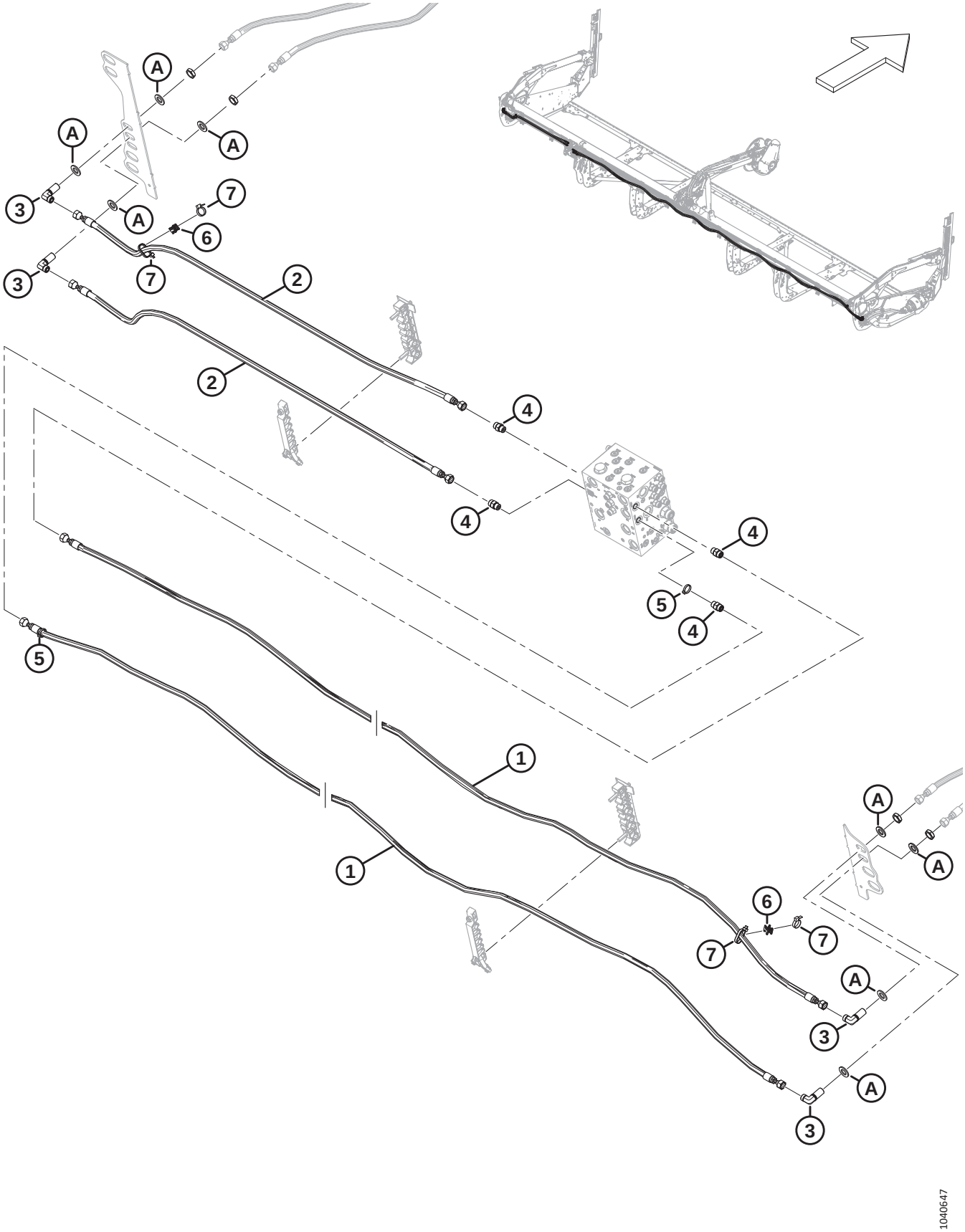

Ref	Part Number	Description	Qty	Serial Number
A	MAC18601	WASHER – FLAT SAE		

114 Frame Components – Float Module

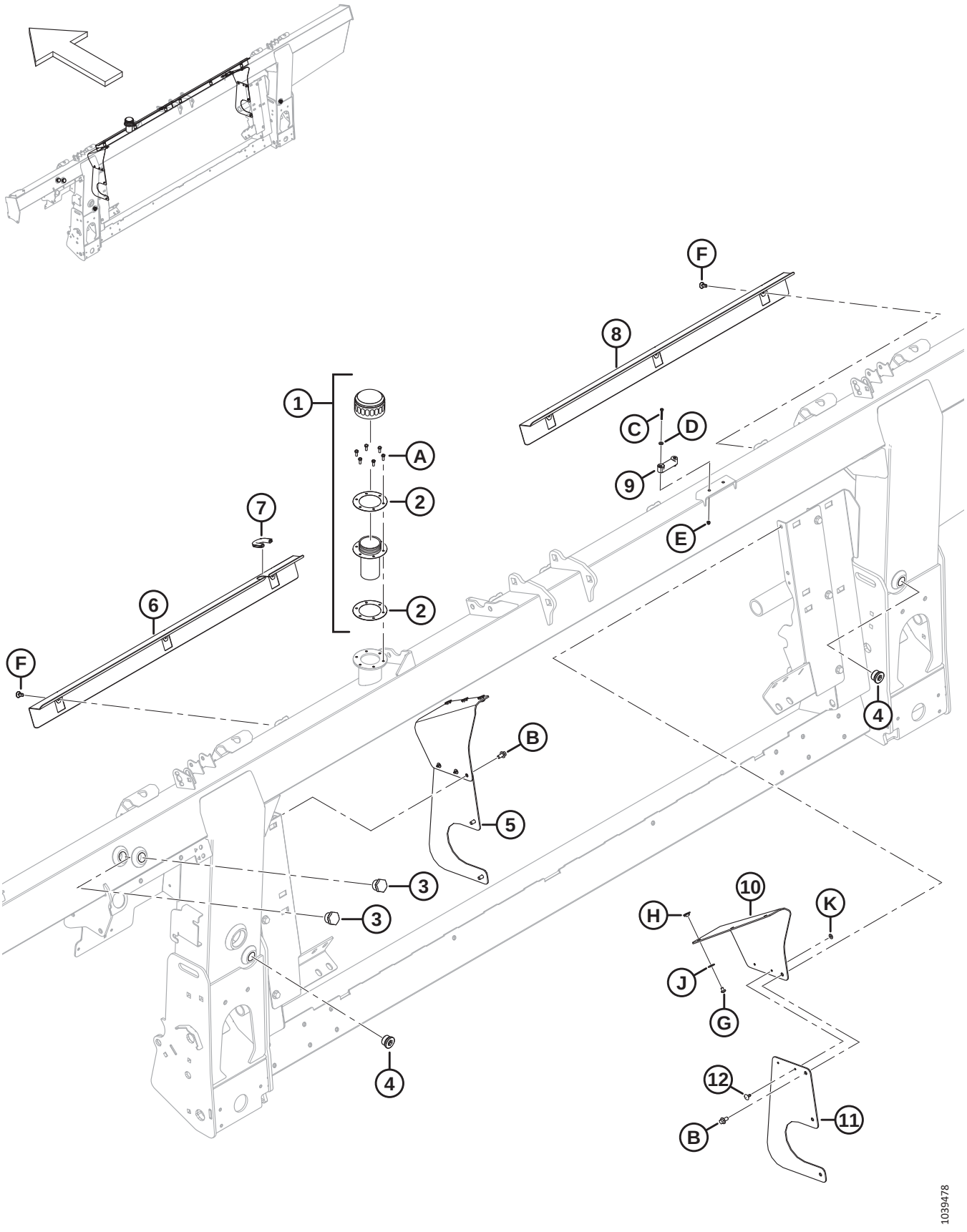

FRAME COMPONENTS – FLOAT MODULE

Ref	Part Number	Description	Qty	Serial Number
1	MAC133942	CAP – OIL FILLER [298]	1	
2	MAC304658	GASKET – OIL FILLER (2 PACK)	1	
3	MAC304668	SIGHT GLASS	2	
4	MAC136269	PLUG – HEX SOCKET	2	
	MAC30971	O-RING – Ø2.95 X Ø23.47		
5	MAC357512	KIT – DUST COVER SIDES [299]	A/R	
6	MAC314928	COVER – LH	1	
7	MAC194082	MOULDING	1	
8	MAC322870	COVER – RH	1	
9	MAC322872	LEVEL – BUBBLE	1	
10	MAC357174	FLAP – DUST COVER FILLER	2	
11	MAC357173	COVER – FEED AUGER SIDE	2	
12	MAC293053	RIVET – POP	4	
B	MAC136485	BOLT – HEX FLG HD TFL M8 X 1.25 X 16-8.8-AA1J		
C	MAC320388	SCREW – PAN HD TFL M4 X 0.7 X 30-4.8-ZINC		
D	MAC18798	WASHER – FLAT SAE 7/32 ID X 7/16 IN OD AA1J		
E	MAC197320	NUT – HEX NYLOC M4 X 0.7-8-AA1J		
F	NSS	CLIP – PUSH-IN, PANEL		
G	MAC252291	SCREW – PAN HD M6 X 1 X 8-8.8-AA1J		
H	MAC252051	NUT – TEE M6		
J	MAC184706	WASHER – FLAT LARGE M6-200HV		
K	MAC293054	WASHER – FLAT LARGE M5-200HV-AA1J		

298. Remove the cap and gasket covering the fill hole during shipping (not shown). Retain six screws (MAC135873). Replace the cap and gasket with oil filler cap (MAC133942) which comes complete with oil cap (NSS), filler neck (NSS), and two gaskets (MAC304658). Use the six screws retained from the shipping cap to attach the oil filler cap to the frame. The oil filler cap comes shipped with the frame or can be ordered as a replacement.
299. This kit is used to service units with superseded side covers (MAC347558). The kit includes two dust cover filler flaps (MAC357174), two feed auger side covers (MAC357173), four pop rivets (MAC293053), and hardware.

115 Pump, Gearbox, and Input Drive

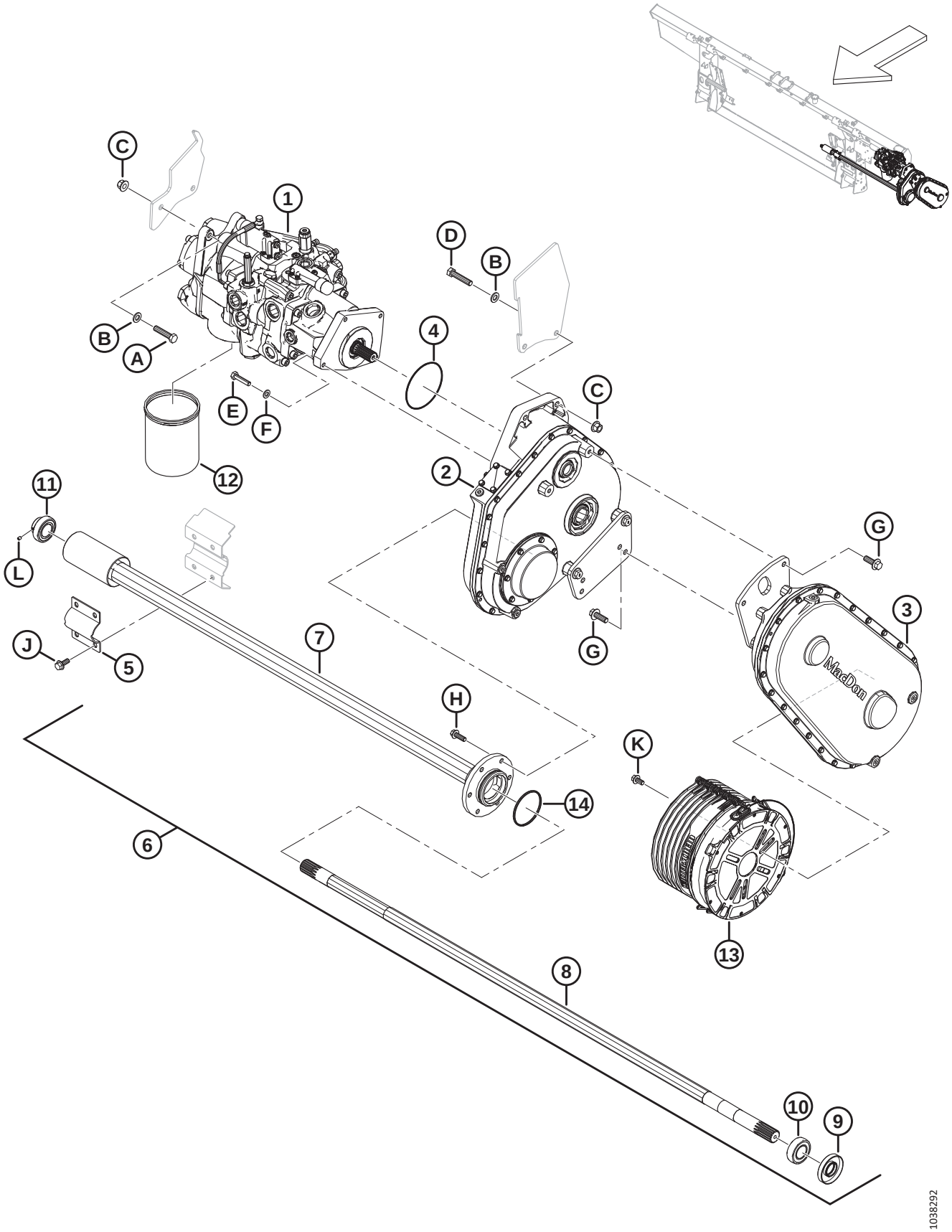

Ref	Part Number	Description	Qty	Serial Number
1	MAC337774	PUMP – INTEGRATED [300]	1	
2	MAC308725	DRIVE – FLOAT MODULE MAIN [301]	1	
3	MAC308726	DRIVE – INPUT 1.14:1 (CNH) [302]	1	
4	MAC328713	O-RING – 2.62 X 113.97	1	
5	MAC347185	CLAMP – AUGER PIVOT	1	
6	MAC308732	ASSEMBLY – FEED AUGER SHAFT [303]	1	
7	MAC328370	TUBE – OUTPUT	1	
8	MAC308740	SHAFT – OUTPUT	1	
9	MAC308755	SEAL – SHAFT	1	
10	MAC21363	BEARING – SPH OD AND COLLAR C/W 2 SEALS	1	
11	MAC328371	BEARING – INSERT	1	
12	MAC320360	FILTER – HYD C/W 2X SEALS	1	
13	MAC328316	GUARD – COUNTER CONE 250 MM	1	
14	MAC252462	O-RING 3.18 X 82.55	1	
A	MAC152779	BOLT – HEX HD M12 X 1.75 X 55-8.8-AA1J		
B	MAC184714	WASHER – FLAT REG M12-300HV		
C	MAC136431	NUT – HEX FLG CTR LOC M12 X 1.75-10		
D	MAC152274	BOLT – HEX HD M12 X 1.75 X 60-8.8-AA1J		
E	MAC135335	BOLT – HEX HD M10 X 1.5 X 45-8.8-AA1J		
F	MAC184711	WASHER – FLAT REG M10-200HV-AA1J		
G	MAC152731	BOLT – HEX FLG HD TFL M12 X 1.75 X 35-10.9-AA1J		
H	MAC184665	BOLT – HEX FLG HD M10 X 1.5 X 30-10.9-AA1J		
J	MAC135783	BOLT – HEX FLG HD TFL M10 X 1.5 X 25-10.9-AA1J		
K	MAC152655	BOLT – HEX FLG HD M10 X 1.5 X 20-8.8-AA1J		
L	MAC320418	SCREW – SET HEX SOC 1/4-28 X 5/16-GR5-ZINC		

300. For pump assembly, refer to Section *116 Pump Assembly, page 325*.
301. For gearbox assembly, refer to Section *118 Gearbox Assembly, page 331*.
302. Used with Case and New Holland combines. For input drive assembly, refer to Section *119 Input Drive Assembly, page 335*.
303. The feed auger shaft assembly includes shaft seal (MAC308755), collar bearing (MAC21363), output tube (MAC328370), output shaft (MAC328202), insert bearing (MAC328371), O-ring (MAC252462), and two set screws (MAC320418).

116 Pump Assembly

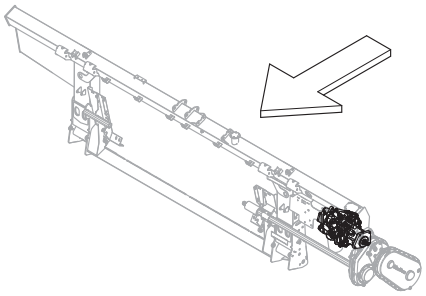

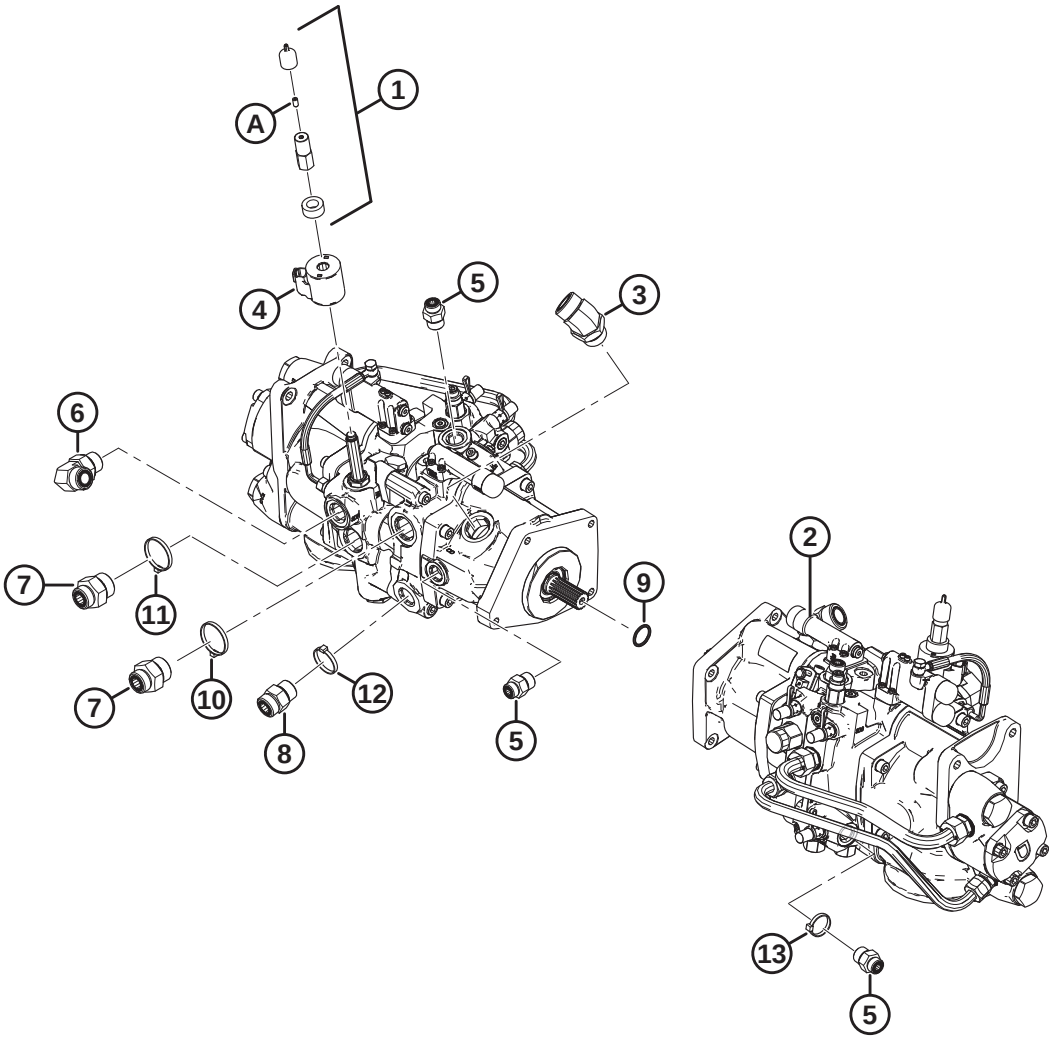

1034439

PUMP ASSEMBLY

Ref	Part Number	Description	Qty	Serial Number
1	MAC328262	KIT – MANUAL OVERRIDE [304]	1	
2	MAC337774	PUMP – INTEGRATED [305]	1	
	MAC322148	SEAL KIT		
3	MAC252814	FITTING – ELBOW 45° HYD	1	
	MAC135554	O-RING – 1.78 X 23.52		
	MAC50220	O-RING – Ø2.95 X Ø29.74		
4	MAC209045	COIL – SOLENOID	1	
5	MAC184463	FITTING – ADAPTER HYD (M1, M2)	3	
	MAC44210	O-RING – Ø2.46 X Ø19.18		
	MAC135866	O-RING – Ø1.78 X Ø12.42		
6	MAC135821	FITTING – ELBOW 90° HYD (SDP)	1	
	MAC30971	O-RING – Ø2.95 X Ø23.47		
	MAC135868	O-RING – Ø1.78 X Ø18.77		
7	MAC135789	FITTING – ADAPTER (KP)	2	
	MAC50220	O-RING – Ø2.95 X Ø29.74		
	MAC135868	O-RING – Ø1.78 X Ø18.77		
8	MAC135788	FITTING – ADAPTER (SDR)	1	
	MAC30971	O-RING – Ø2.95 X Ø23.47		
	MAC135868	O-RING – Ø1.78 X Ø18.77		
9	MAC17006	O-RING – 3.18 X 25.40	1	
10	MAC40704	FASTENER – CABLE TIE, ORANGE	1	
11	MAC40703	FASTENER – CABLE TIE, BLUE	1	
12	MAC40702	FASTENER – CABLE TIE, RED	1	
13	MAC21763	FASTENER – CABLE TIE, BLACK	1	
A	MAC21061	SCREW – SET HEX SOC 1/4-20 X 1/2 GR5 AF0C	1	

304. The kit includes spacer coil (NSS), dust cap (NSS), coil nut (NSS), and set screw (MAC21061).
305. If replacement parts are needed for discontinued seal kit (MAC328281) or discontinued relief valves (MAC322159 and MAC328282), order new integrated pump (MAC337774). For integrated pump service parts, refer to Section *117 Integrated Pump – Service Parts, page 327*.

117 Integrated Pump – Service Parts

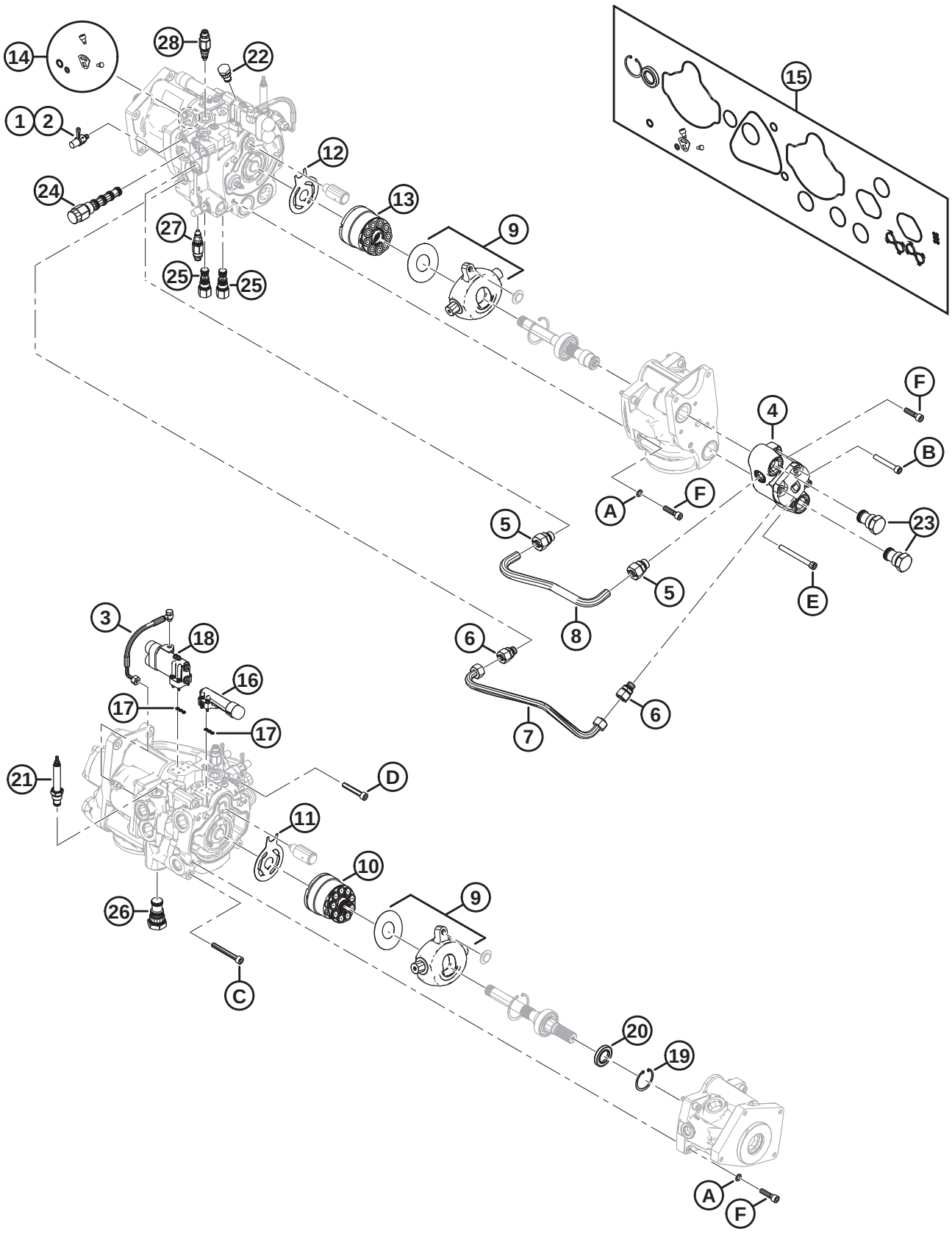

NOTE:

All illustrated parts that are **NOT** in the parts list are non-serviced parts, illustrated for reference only.

Ref	Part Number	Description	Qty	Serial Number
	MAC337774	PUMP – INTEGRATED [306]		
1	MAC136900	CAP – DUST	3	
2	MAC134437	FITTING – COUPLING HYD-TEST PORT	3	
3	MAC276790	KIT – LS HOSE AND HARDWARE	1	
4	MAC328288	KIT – 15CC GEAR PUMP W/ HARDWARE	1	
5	MAC328292	FITTING – ADAPTER (18 MM)	2	
6	MAC328293	FITTING – ADAPTER (15 MM)	2	
7	MAC328291	LINE – REVERSE	1	
8	MAC328290	LINE – FORWARD	1	
9	MAC337441	KIT – SWASHPLATE REBUILD	2	
10	MAC328313	KIT – 45CC ROTATING GROUP	1	
11	MAC328312	PLATE – VALVE	1	
12	MAC328311	PLATE – VALVE	1	
13	MAC328310	KIT – 38CC ROTATING GROUP	1	
14	MAC337440	KIT – KNIFE PUMP CAM SEAL	1	
15	MAC328309	KIT – PUMP SEAL	1	
16	MAC328306	KIT – KNIFE DRIVE COMPENSATOR	1	
17	MAC328308	KIT – COMPENSATOR SEALS (LOAD SENSE)	2	
18	MAC328307	KIT – SIDE DRAPER COMPENSATOR	1	
19	MAC328178	RING – RETAINING INTERNAL	1	
20	MAC322142	SEAL – SHAFT	1	
21	MAC328261	VALVE – FLOW CONTROL (MV)	1	
	MAC252351	SEAL KIT		
22	MAC123318	VALVE – CHECK (CV6)	1	
	MAC328284	SEAL KIT		
23	MAC322161	VALVE – CHECK (CV1, CV2)	2	
	MAC328283	SEAL KIT		

306. Refer to Section *116 Pump Assembly, page 325*.

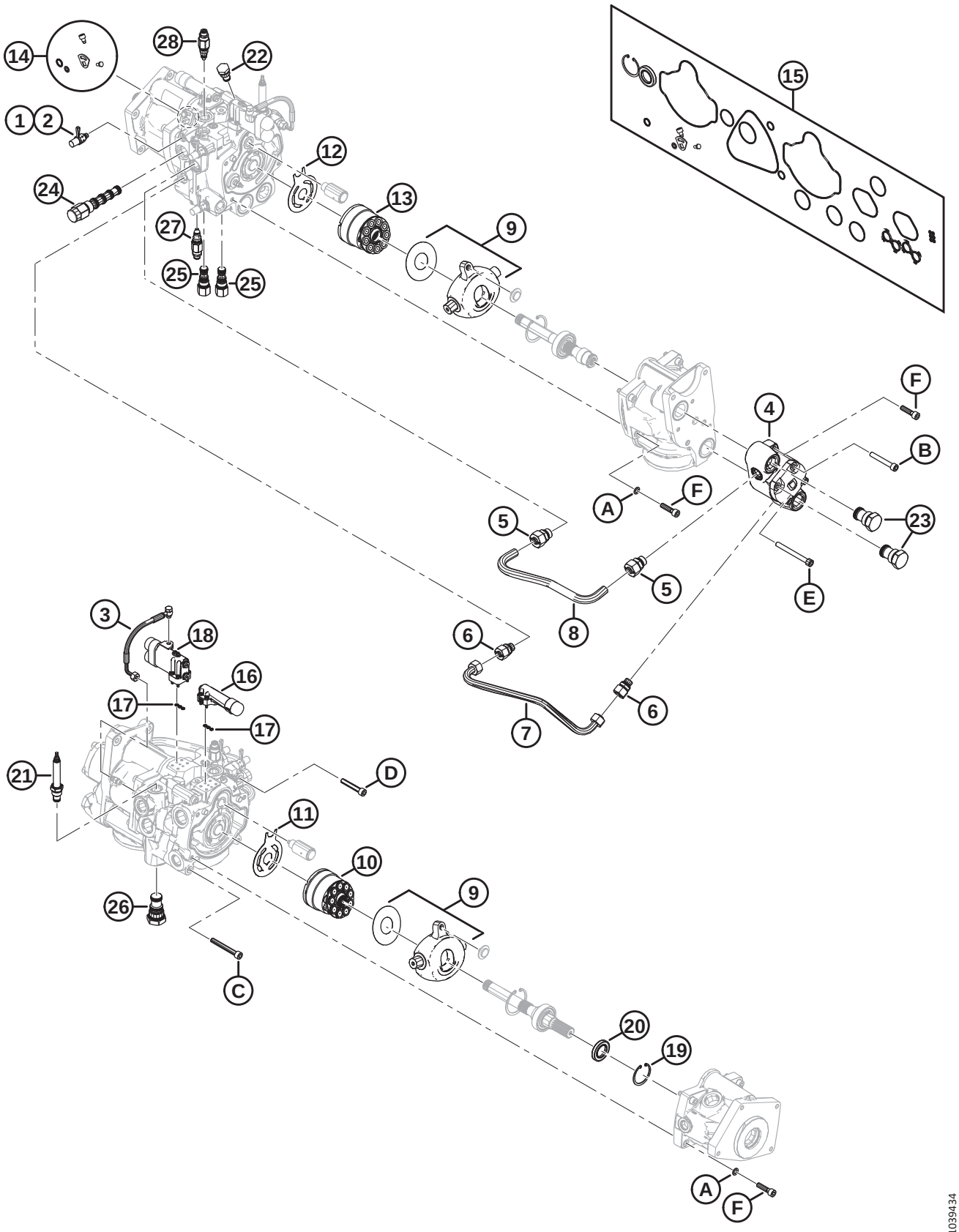
14
28
22
1
2
12
24
13
9
27
25
25
15
F
4
B
A
F
5
23
5
E
8
6
3
18
16
17
17
6
7
21
D
11
10
9
26
C
20
19
A
F
1039434

Ref	Part Number	Description	Qty	Serial Number
24	MAC322160	VALVE – PO 3WAY (DH)	1	
	MAC328269	SEAL KIT		
25	MAC322158	VALVE – PO LOGIC -10 (LE1, LE2)	2	
	MAC322148	SEAL KIT		
26	MAC322157	VALVE – PO LOGIC ELEMENT-16 (LE3)	1	
	MAC322149	SEAL KIT		
27	MAC337773	VALVE – RELIEF (RV2)	1	
	MAC337823	SEAL KIT		
28	MAC337770	VALVE – RELIEF (RV1)	1	
	MAC337823	SEAL KIT		
	MAC328262	KIT – MANUAL OVERRIDE [306]	1	
A	MAC337433	WASHER – M10 SPECIAL		
B	MAC337427	BOLT – SOC HD M10 X 70GR12.9		
C	MAC337431	BOLT – SOC HD M10 X 80GR12.9		
D	MAC337432	BOLT – SOC HD M10 X 60GR12.9		
E	MAC337429	BOLT – SOC HD M10 X 100 GR12.9		
F	MAC337430	BOLT – SOC HD M10 X 40GR12.9		

118 Gearbox Assembly

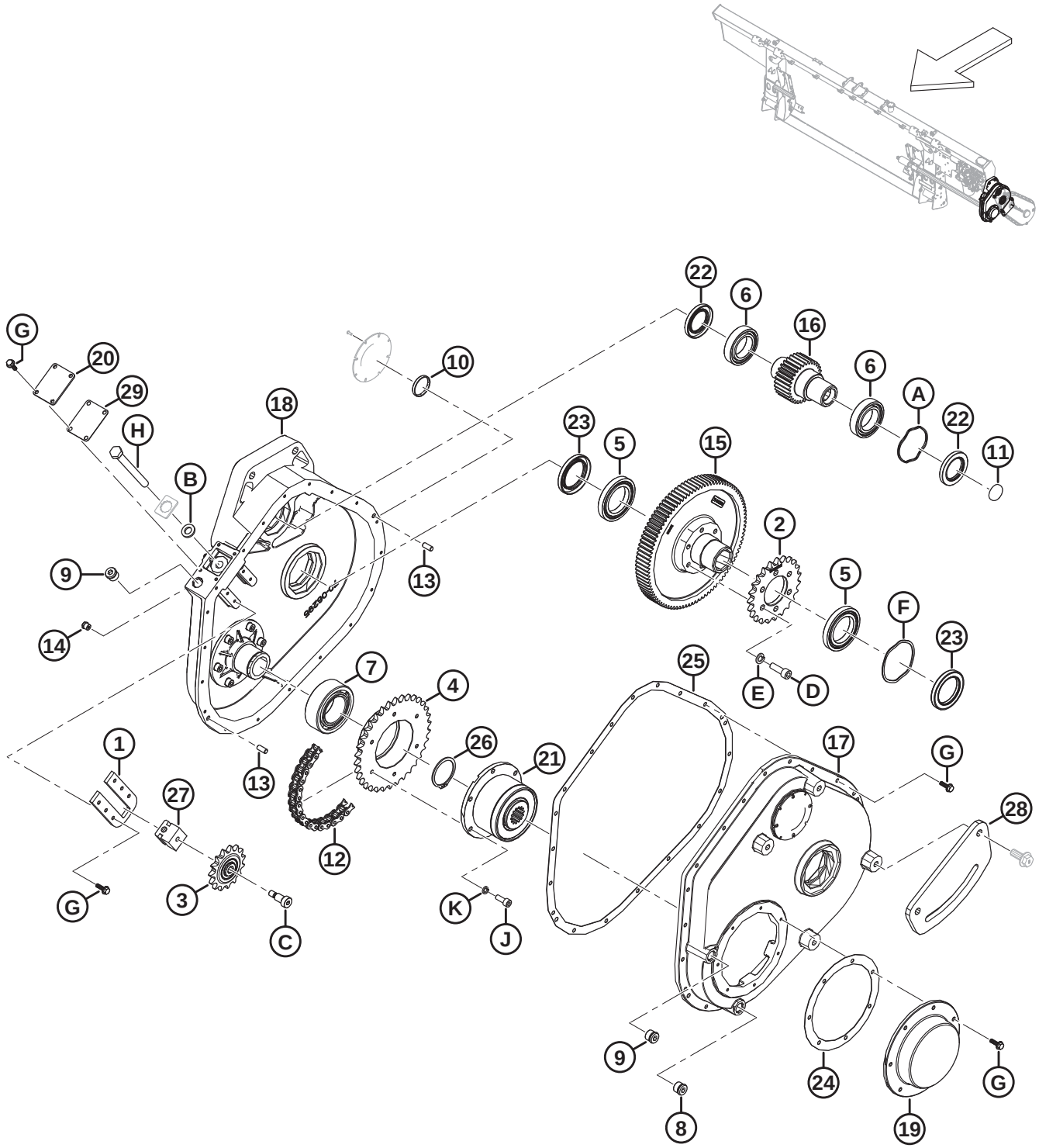

GEARBOX ASSEMBLY

Ref	Part Number	Description	Qty	Serial Number
	MAC308725	DRIVE – FLOAT MODULE MAIN		
	MAC347405	KIT – GEARBOX UPDATE [307]	A/R	
1	MAC328181	PLATE – TENSIONER	1	
2	MAC322409	SPROCKET – 50A23	1	
3	MAC328188	SPROCKET – 50B15 C/W BEARING	1	
4	MAC328187	SPROCKET – 50B34	1	
5	MAC322193	BEARING – BALL	2	
6	MAC322192	BEARING – BALL	2	
7	MAC322197	BEARING – DOUBLE ROW BALL	1	
8	MAC328154	PLUG – M18 ORB MAGNETIC	1	
9	MAC328152	PLUG – M18 ORB	1	
10	MAC328186	PLUG	1	
11	MAC328185	PLUG	1	
12	MAC301971	CHAIN – ROLLER, RC-50-56P ENDLESS	1	
13	NSS	PIN – DOWEL	2	
14	MAC328176	BREATHER – 1/8-27 NPT	1	
15	MAC328175	GEAR – 94 TEETH	1	
16	MAC328174	GEAR – 30 TEETH	1	
17	NSS	HOUSING – GEARBOX	1	
18	NSS	HOUSING – GEARBOX	1	
19	MAC328164	COVER – CLUTCH	1	
20	MAC328165	COVER – TENSIONER	1	
21	MAC314082	CLUTCH – WEASLER	1	
22	MAC347416	SEAL – VITON 38 X 62 X 7	2	
23	MAC347417	SEAL – VITON 48 X 72 X 8	2	
24	MAC328161	GASKET – CLUTCH COVER	1	
25	MAC347410	GASKET – FM200 MAIN GEARBOX	1	
26	MAC322195	RING – RETAINING	1	

307. The gearbox update kit is used to update model year 2020 gearboxes. The kit includes spacers (MAC347408, MAC347409), gasket (MAC347410), two seals (MAC347416), two seals (MAC347417), wave spring washers (MAC328159, MAC328160), gears (MAC328174, MAC328175), ball bearings (MAC322192, MAC322193), sprocket (MAC322409), screws (MAC135401), washers (MAC30632), and instructions.

GEARBOX ASSEMBLY

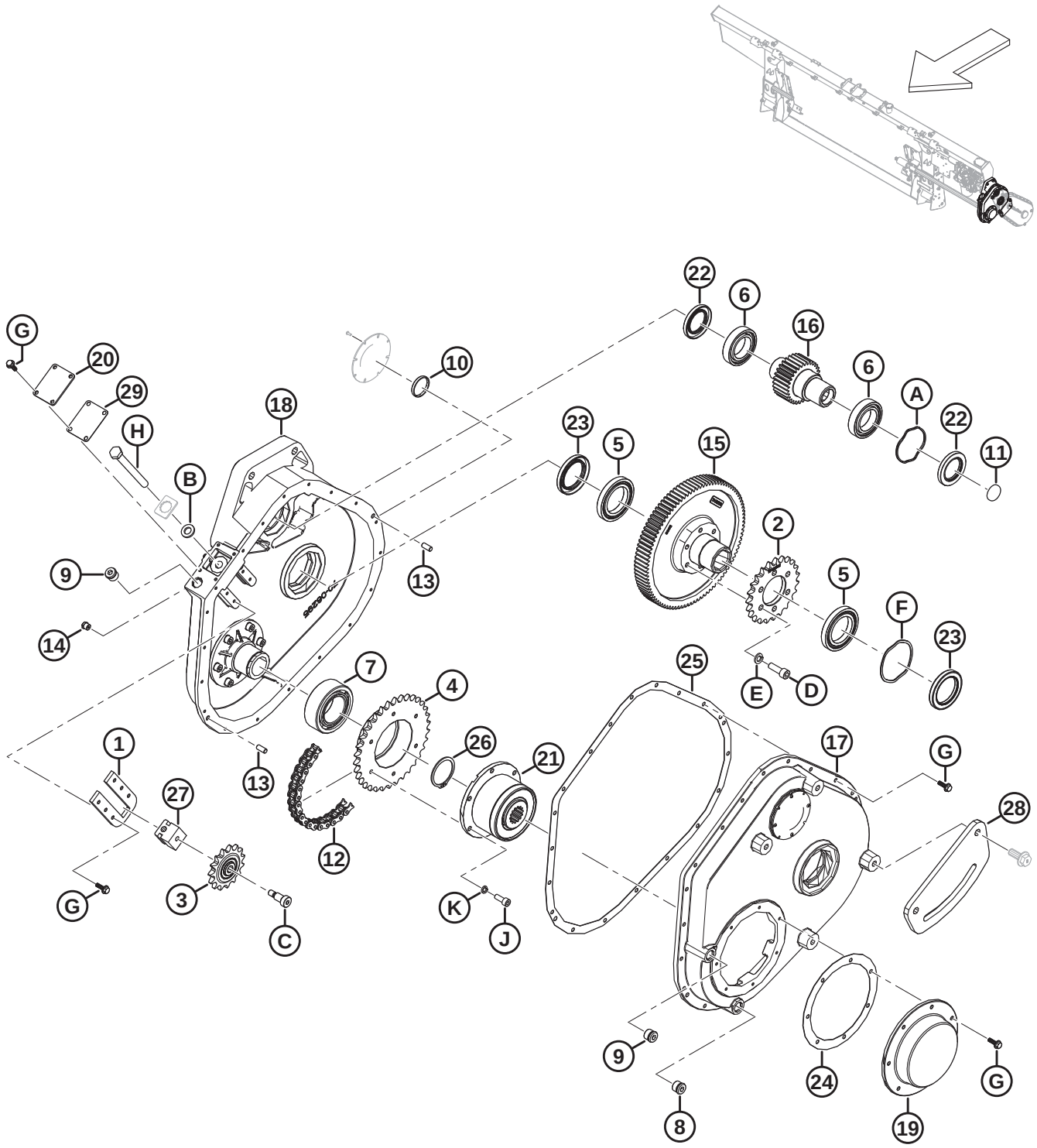

GEARBOX ASSEMBLY

Ref	Part Number	Description	Qty	Serial Number
27	MAC328157	BLOCK – IDLER	1	
28	MAC347349	BRACKET – MAIN CMPLTN JOINT	1	
29	MAC328162	GASKET – TENSIONER	1	
A	MAC328160	WASHER – WAVE SPRING		
B	MAC184587	WASHER – FLAT 1/2 X 1.25 AA1J		
C	MAC328184	BOLT – SHOULDER 3/8-16 X 3/4 LG		
D	MAC347978	SCREW – CAP M10 X 1.5 X 30		
	MAC135401	SCREW – HEX SOC HD TFL M10 X 1.5 X 30-8.8-AA1J [308]		
E	MAC347975	WASHER – LOCK M10 CAP SCREW		
	MAC30632	WASHER – LOCK SPRING M10 [308]		
F	MAC328159	WASHER – WAVE SPRING		
G	MAC328156	BOLT – SERRATED FLANGE		
H	MAC328158	BOLT – TENSIONER		
J	MAC347977	SCREW – CAP M8 X 1 X 20		
K	MAC347976	WASHER – LOCK M8 CAP SCREW		

308. For machines serviced with gearbox update kit (MAC347405).

119 Input Drive Assembly

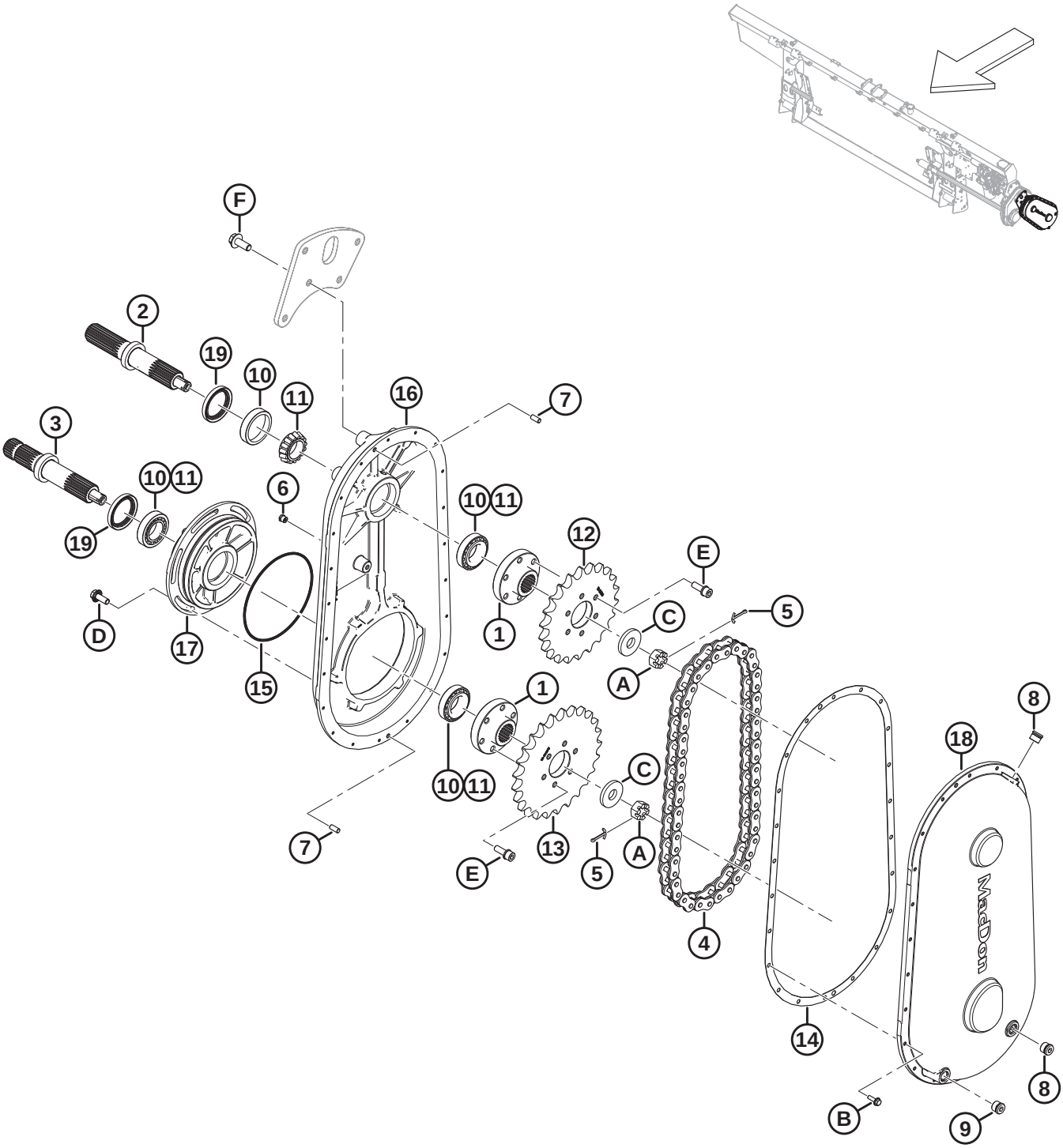

INPUT DRIVE ASSEMBLY

NOTE:

Kits (B-bundle numbers and C-collector numbers) can be purchased from MacDon Whole Goods only.

Ref	Part Number	Description	Qty	Serial Number
	B7041	KIT – CNH INPUT DRIVE SPROCKETS [309]		
	MAC308726	DRIVE – INPUT 1.14:1 (CNH) [310]		
1	MAC328203	HUB – SPLINED	2	
2	MAC328202	SHAFT – OUTPUT	1	
3	MAC328201	SHAFT – INPUT	1	
4	MAC328120	CHAIN – RC80 50 PT ENDLESS	1	
5	MAC18607	PIN – COTTER 5/32 DIA X 1.5 ZP	2	
6	MAC328176	BREATHER – 1/8-27 NPT	1	
7	NSS	PIN – DOWEL	2	
8	MAC328152	PLUG – M18 ORB	2	
9	MAC328154	PLUG – M18 ORB MAGNETIC	1	
10	MAC30701	BEARING – CUP	4	
11	MAC30702	BEARING – CONE	4	
12	MAC308852	SPROCKET – 80A22 (CNH)	1	
13	MAC308848	SPROCKET – 80A25 (CNH)	1	
14	MAC328200	GASKET – COMPLETION DRIVE	1	
15	MAC328199	O RING – #260	1	
16	MAC328198	HOUSING – COMP GEARBOX	1	
17	MAC328197	HOUSING – ECCENTRIC	1	
18	NSS	COVER – COMP GEARBOX	1	
19	MAC187477	SEAL	2	
A	MAC5512	NUT – HEX SLOTTED .750-16 UNF ZN PL		
B	MAC328156	BOLT – SERRATED FLANGE		
C	MAC6647	WASHER – FLAT		
D	MAC135783	BOLT – HEX FLG HD TFL M10 X 1.5 X 25-10.9-AA1J		

309. The kit includes gasket (MAC328200), chain (MAC328120), sprockets (MAC308848, MAC308852), and instructions. Kits are available through Whole Goods only.
310. Used with Case and New Holland combines.

INPUT DRIVE ASSEMBLY

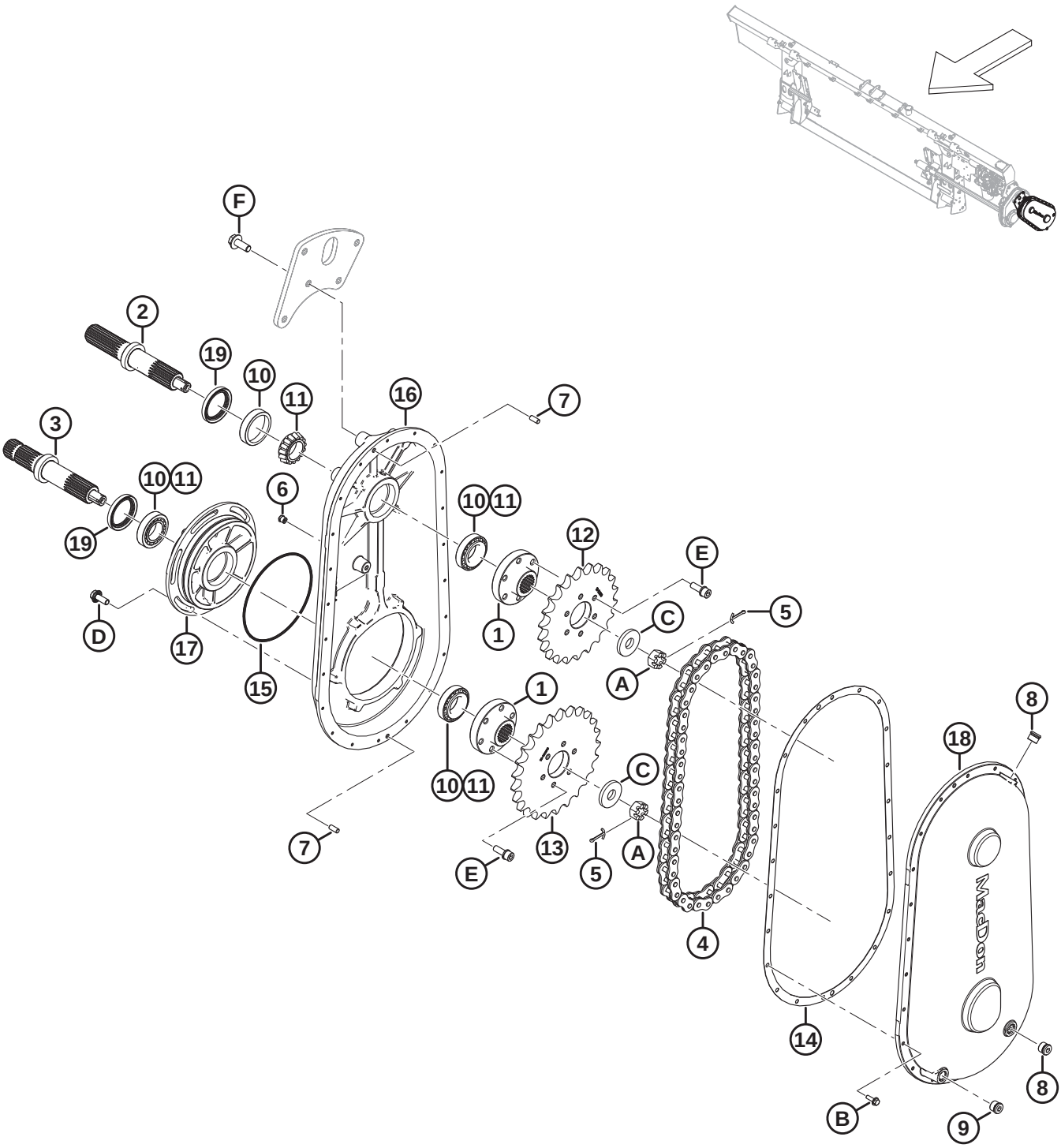

Ref	Part Number	Description	Qty	Serial Number
E	MAC328183	BOLT – M10 X 1.25 X 30 SEMS		
F	MAC320180	BOLT – HEX FLG HD M12 X 1.75 X 30-SPCL-8.8-AA1J		

120 Input Driveline and Support

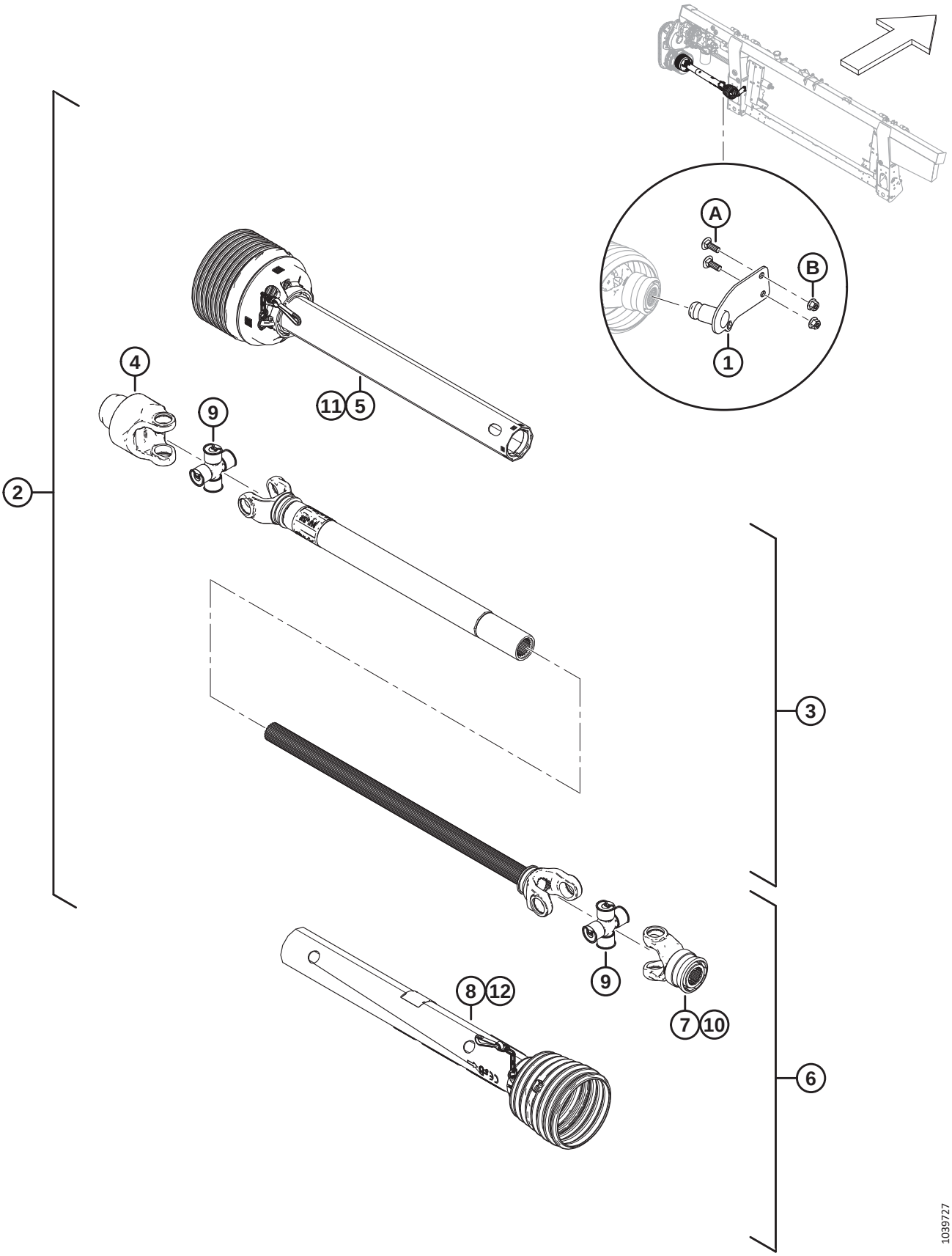

NOTE:

Kits (B-bundle numbers and C-collector numbers) can be purchased from MacDon Whole Goods only.

Ref	Part Number	Description	Qty	Serial Number
	B7038	KIT – 6 TOOTH SPLINE CE DRIVELINE [311]	1	
	B7039	KIT – 21 TOOTH SPLINE CE DRIVELINE [312]	1	
1	MAC322486	SUPPORT WELDT – 6T PTO STORAGE [313]	1	
	MAC322456	SUPPORT WELDT – 21T PTO STORAGE [314]	1	
2	MAC314173	DRIVELINE – 6T SPLINE [315]	1	
	MAC314174	DRIVELINE – 1.375 IN 21T SPLINE CE [316]	1	
3	MAC322915	DRIVELINE – IMPLEMENT HALF	1	
4	MAC133631	YOKE – FREE MOTION	1	
5	MAC322916	DRIVELINE – IMPLEMENT GUARD	1	
6	MAC322926	DRIVELINE – 6T COMBINE HALF [313]	1	
	MAC322924	DRIVELINE – 21T COMBINE HALF [314]	1	
7	MAC133634	YOKE – 6T [313]	1	
	MAC322925	YOKE – 21T [314]	1	
8	MAC322917	DRIVELINE – COMBINE END GUARD	1	
9	MAC142777	CROSS JOURNAL KIT	2	
10	MAC40095	KIT – REPAIR	1	
11	MAC322918	INNER GUARD REPAIR KIT [317]	1	
12	MAC220766	SHIELD REPAIR KIT CE [317]	1	
	MAC36651	DECAL – DANGER		
	MAC194521	DECAL – WARNING		
	MAC30316	DECAL – DANGER		
A	MAC184662	BOLT – RHSN TFL M10 X 1.5 X 30-8.8-AA1J		
B	MAC135799	NUT – HEX FLG CTR LOC M10 X 1.5-10		

311. 6-tooth splined driveline kit for Case and New Holland combines. Kits are available through Whole Goods only.
312. 21-tooth splined driveline kit for Case and New Holland combines. Kits are available through Whole Goods only.
313. For 6-tooth spline driveline.
314. For 21-tooth spline driveline.
315. 6-tooth splined driveline kit for Case and New Holland combines.
316. 21-tooth splined driveline kit for Case and New Holland combines.
317. The kit includes chain kit, bearing, lock seal, and instructions.

121 Input Driveline and Support – High Angle

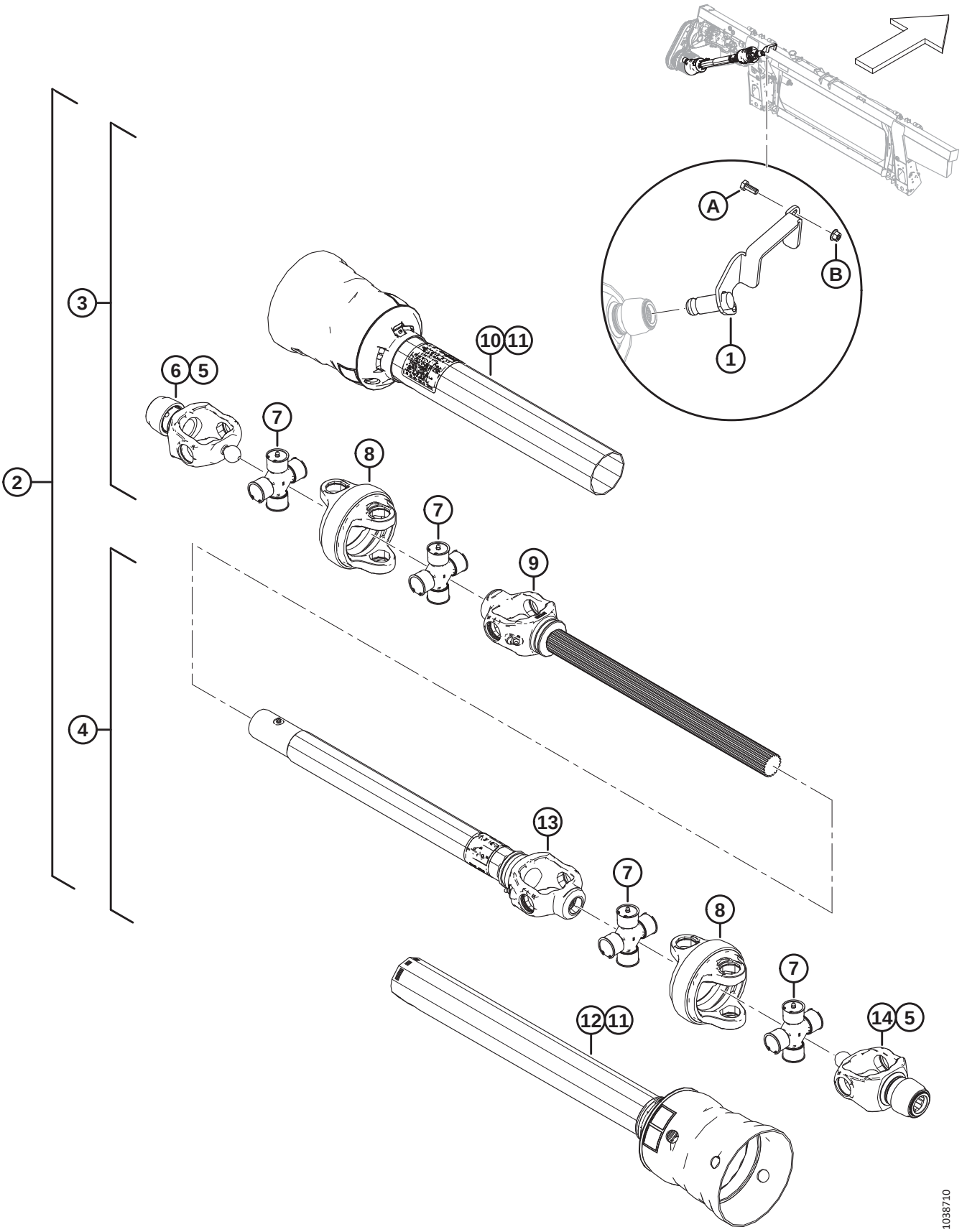

INPUT DRIVELINE AND SUPPORT – HIGH ANGLE

NOTE:

Kits (B-bundle numbers and C-collector numbers) can be purchased from MacDon Whole Goods only.

Ref	Part Number	Description	Qty	Serial Number
	B7180	KIT – 6T LONG HI-ANGLE DRIVESHAFT [318]		
	B7181	KIT – 21T LONG HI-ANGLE DRIVESHAFT [319]		
	B7326	KIT – 21T MID HI-ANGLE DRIVESHAFT [320]		
1	MAC357064	SUPPORT WELDT – 6T PTO STORAGE [321]	1	
	MAC357012	SUPPORT WELDT – 21T PTO STORAGE [322]	1	
2	MAC322996	DRIVELINE – 6T HIGH ANGLE	1	
	MAC322997	DRIVELINE – 21T HIGH ANGLE LONG	1	
	MAC322998	DRIVELINE – 21T HIGH ANGLE SHORT	1	
3	MAC337709	DRIVELINE – 6T SHAFT HALF, GUARDED [321]	1	
	MAC337707	DRIVELINE – 21T SHAFT HALF, GUARDED [323]	1	
4	MAC337723	DRIVELINE – 21T TUBE HALF, GUARDED [324]	1	
	MAC337727	DRIVE – 21T TUBE HALF, GUARDED [325]	1	
5	MAC133632	KIT – AUTO LOK REPAIR	2	
6	MAC337711	YOKE – 21T CV	1	
7	MAC337712	CROSS KIT	4	
8	MAC337715	HOUSING CV	2	
9	MAC337716	DRIVELINE – CV YOKE AND SHAFT [326]	1	
10	MAC337717	DRIVELINE – OUTER GUARD	1	
11	MAC337718	DRIVELINE – GUARD REPAIR KIT	2	
12	MAC337720	DRIVELINE – INNER GUARD [324]	1	
	MAC337731	DRIVELINE – INNER GUARD [325]	1	

318. Long 6-tooth splined driveline kit for Case and New Holland Wide and Narrow combines, Sidehill (18%) and Hillside (27%) configurations. Kits are available through Whole Goods only.
319. Long 21-tooth splined driveline kit for Case and New Holland Wide and Narrow combines, Sidehill (18%) and Hillside (27%) configurations. Kits are available through Whole Goods only.
320. Mid 21-tooth splined driveline kit for Case and New Holland wide and narrow combines with Everest package, and Case and New Holland Hillco Hillside Beaterless (27%) package.
321. For long 6-tooth spline drivelines.
322. For 21-tooth spline drivelines.
323. For mid and long 21-tooth spline drivelines.
324. For long 6-tooth and long 21-tooth spline drivelines.
325. For short and mid 21-tooth spline drivelines.
326. For long 6-tooth, and mid and long 21-tooth spline drivelines.

INPUT DRIVELINE AND SUPPORT – HIGH ANGLE

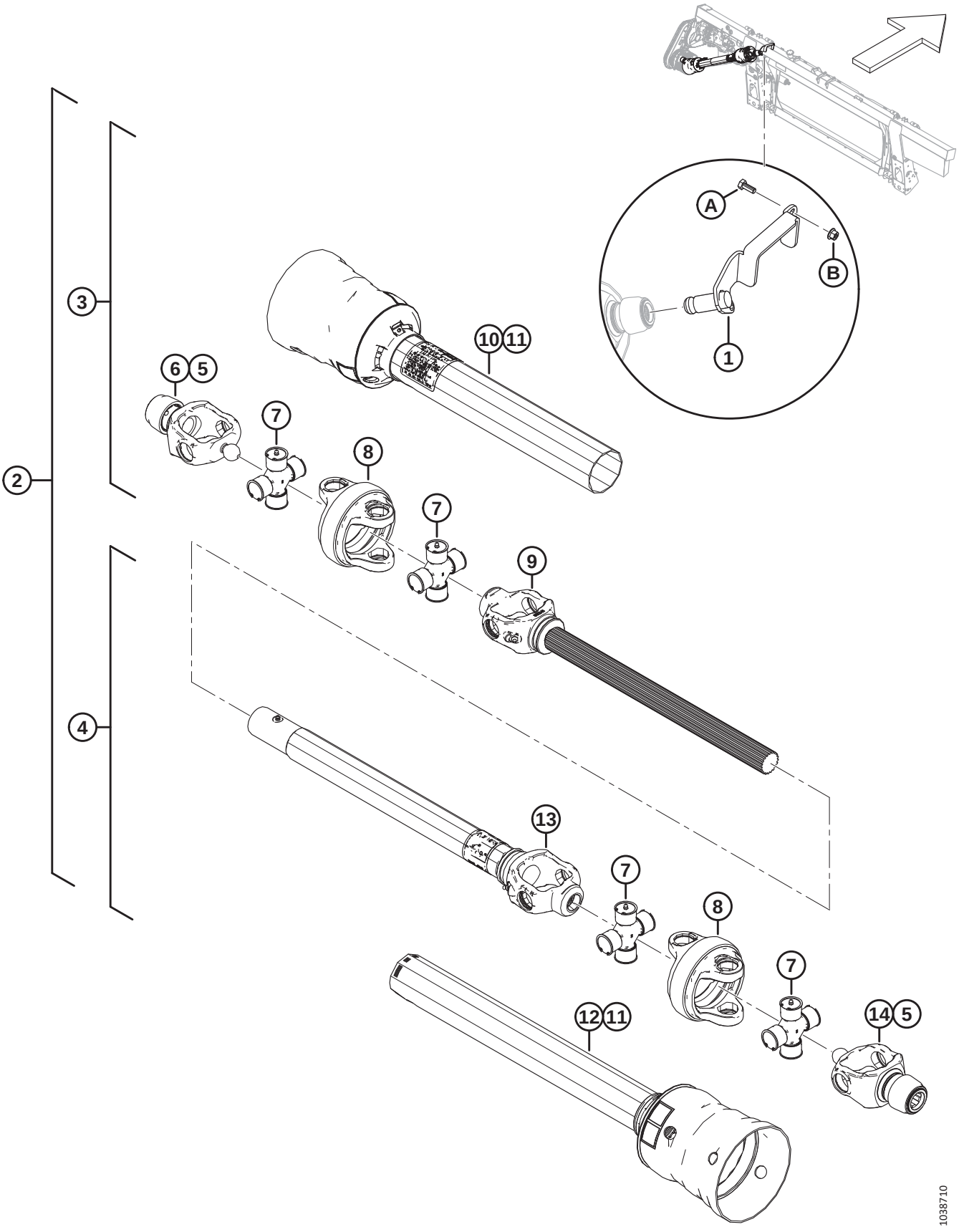

Ref	Part Number	Description	Qty	Serial Number
13	MAC337721	DRIVELINE – YOKE TUBE AND SLEEVE [324]	1	
	MAC337732	DRIVELINE – YOKE TUBE AND SLEEVE [325]	1	
14	MAC337722	6T YOKE CV [321]	1	
	MAC337711	21T YOKE CV [327]	1	
	MAC30316	DECAL – DANGER		
	MAC36651	DECAL – DANGER		
A	MAC30627	BOLT – HEX HD TFL M10 X 1.5 X 25-8.8-A3L		
B	MAC135799	NUT – HEX FLG CTR LOC M10 X 1.5-10		

327. For long and short 21-tooth spline drivelines.

122 Input Driveline Conversion Kits

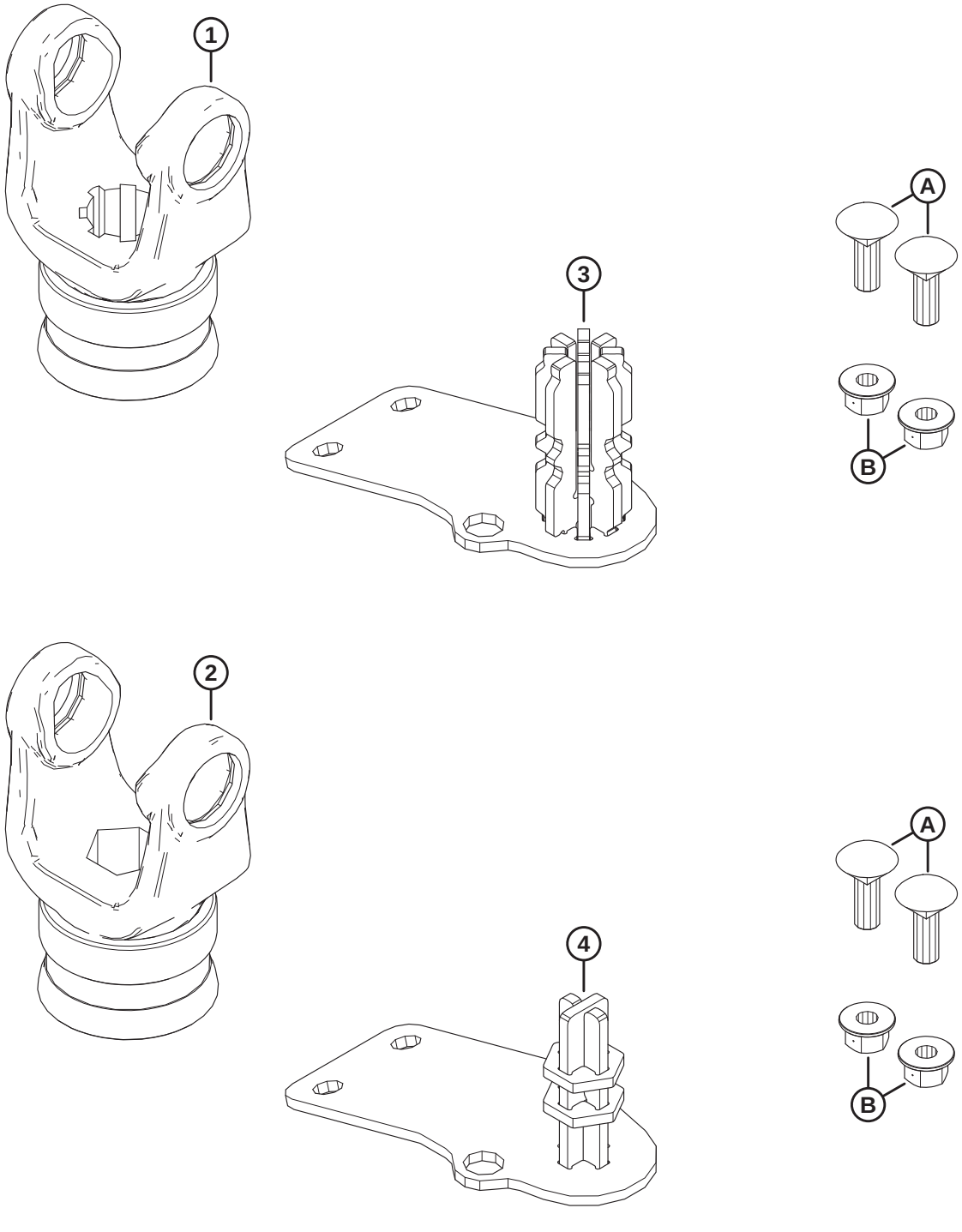

1039521

INPUT DRIVELINE CONVERSION KITS

NOTE:

Kits (B-bundle numbers and C-collector numbers) can be purchased from MacDon Whole Goods only.

Ref	Part Number	Description	Qty	Serial Number
	B7312	KIT – 8T DRIVESHAFT FM200 CONV [328]		
	B7317	KIT – HEX DRIVESHAFT FM200 CONV [328]		
1	MAC314657	YOKE – 8T [329]	1	
2	MAC133641	YOKE – HEX [330]	1	
3	MAC337117	STORAGE WELDT – 8T [329]	1	
4	MAC347722	STORAGE WELDT – HEX [330]	1	
A	MAC184662	BOLT – RHSN TFL M10 X 1.5 X 30-8.8-AA1J		
B	MAC135799	NUT – HEX FLG CTR LOC M10 X 1.5-10		

328. Kits are available through Whole Goods only.
329. Included in 8-tooth spline driveshaft conversion kit (B7312).
330. Included in hex driveshaft conversion kit B7317).

123 Auger Drum and Internal Components

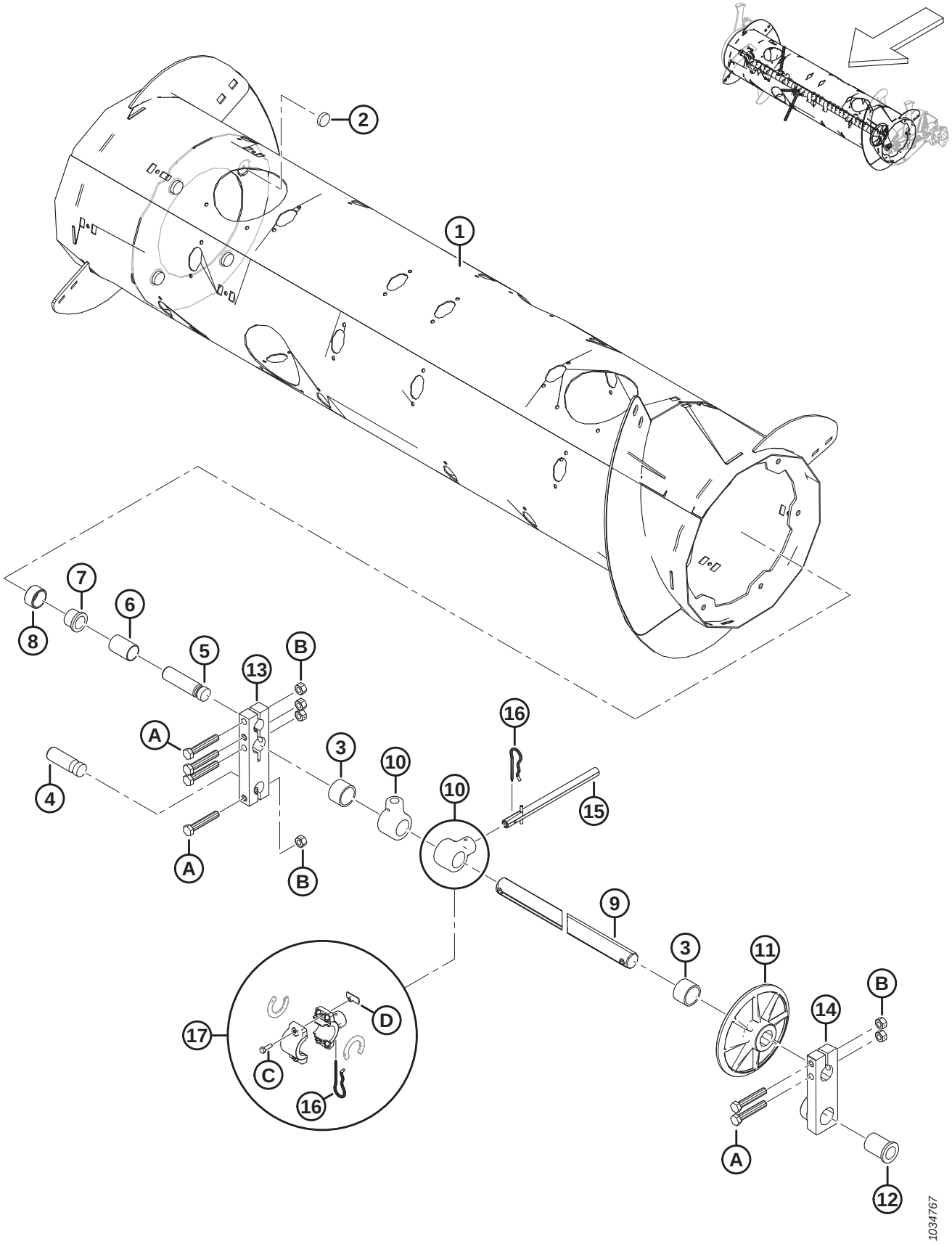

AUGER DRUM AND INTERNAL COMPONENTS

Ref	Part Number	Description	Qty	Serial Number
	MAC322372	ASSEMBLY – FEED AUGER [331]		
1	MAC322397	DRUM – WELDMENT	1	
2	MAC328420	MAGNET – ROUND	4	
3	MAC322770	SPACER TUBE – PLASTIC	2	
4	MAC314062	PIN – PIVOT	1	
5	MAC213660	PIN – PIVOT	1	
6	MAC213657	SPACER	1	
7	MAC133877	BUSHING – PLASTIC FLANGED 1.0 IN.	1	
8	MAC213656	ROLLER	1	
9	MAC308536	SHAFT – FINGER	1	
10	MAC337206	HOLDER – AUGER FINGER	30	
11	MAC248117	WHEEL, GUIDE – FINGERSHAFT	1	
12	MAC248145	BUSHING – FLANGE	1	
13	MAC213608	BLOCK – AUGER SHAFT	1	
14	MAC248538	CASTING – PIVOT BLK, LH, MACH	1	
15	MAC337152	KIT – FINGER [332]	22	
	MAC7642	PIN – SPRING 3/16 DIA X 1.5 LG	A/R	
16	MAC123180	PIN – HAIR	22	
17	MAC276839	KIT – FINGER HOLDER SPLIT 5X (BAG OF 5) [333]	A/R	
A	MAC184675	BOLT – HEX HD M12 X 1.75 X 70-8.8-AA1J		
B	MAC136759	NUT – HEX CTR LOC M12 X 1.75-8-AA1J		
C	MAC252703	BOLT – HEX HD TFL M6 X 1 X 20 X SPCL-12.9-AF0C		
D	MAC197263	NUT – TEE M6 X 1		

331. The complete feed auger assembly includes all listed parts in Section *123 Auger Drum and Internal Components, page 347*, Section *124 Auger Assembly – Right Arm, page 349*, and Section *125 Auger Assembly – Left Arm, page 353*.
332. The finger kit includes solid finger (not sold separately), spring pin (MAC7642), guide (MAC337143), and instructions.
333. The split finger holder kit is used to simplify field replacement of broken one-piece solid finger holders (MAC337206). The kit includes set of five split auger finger holders (NSS), holder spacers (NSS), hair pins (MAC123180), tee nuts (MAC197263), and bolts (MAC252703).

124 Auger Assembly – Right Arm

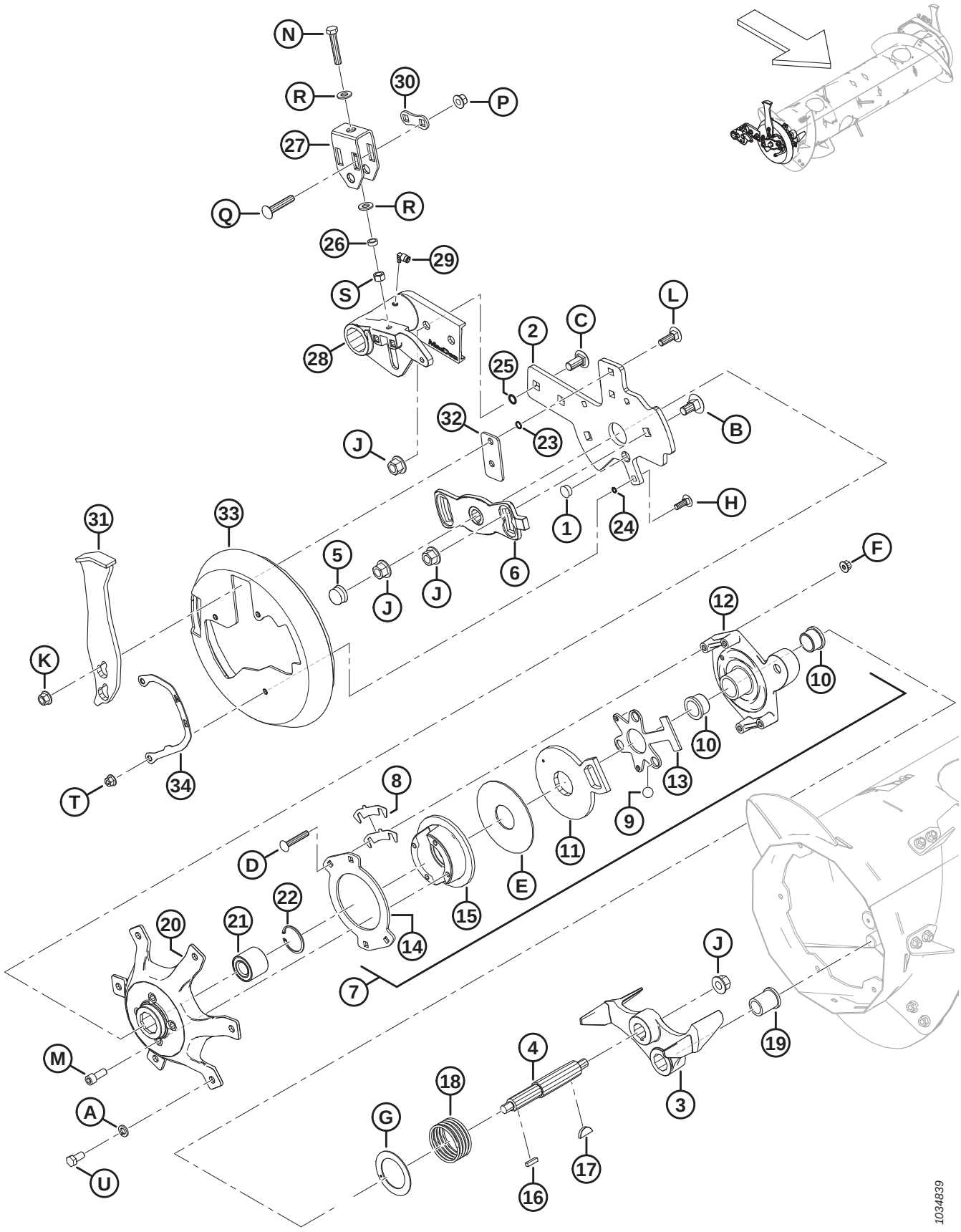

AUGER ASSEMBLY – RIGHT ARM

Ref	Part Number	Description	Qty	Serial Number
1	MAC308859	PLUG – HOLE	1	
2	MAC308850	BAR – RH AUGER SUPPORT	1	
3	MAC304520	CASTING – STOP, MACHINING	1	
4	MAC304514	SHAFT – AUGER	1	
5	MAC276140	CAP – PLASTIC	1	
6	MAC213851	CASTING – TIMING PLATE, MACH	1	
7	MAC213802	ASSEMBLY – REVERSING CLUTCH [334]	1	
8	MAC276206	SHIM CLUTCH	4	
9	MAC248285	BALL	3	
10	MAC213859	BUSHING – PLASTIC 1.25 X 1.5 X 1.0	2	
11	MAC213801	ARM, CLUTCH ACTIVATOR – MACH	1	
12	MAC213649	CAST, CLUTCH HOUSING – MACH	1	
13	MAC337124	PLATE – BALL CAGE	1	
14	MAC213554	DISC – CLUTCH	1	
15	MAC213552	DISC, BRAKE – MACHINING	1	
16	MAC213750	KEY, RECT – 6.35 MM SQ 25.5 MM LG	1	
17	MAC213654	KEY – WOODRUFF 1/4 X 1-1/4	1	
18	MAC213679	SPRING – COMPRESSION	1	
19	MAC213659	BUSHING – FLANGE	1	
20	MAC213546	HUB MACHINING RH	1	
21	MAC337284	BEARING – DOUBLE ROW BALL, 52MM OD	1	
22	MAC21235	RING – INT RETAINING	1	
23	MAC183508	O-RING – 1.78 X 10.82	2	
24	MAC183506	O-RING – 1.78 X 7.65	3	
25	MAC50083	O-RING – Ø2.62 X Ø13.94	2	
26	MAC314169	SPACER	1	
27	MAC314136	BRACKET – ADJUSTER	1	
28	MAC308538	PIVOT – LH AUGER, MACHINING	1	
29	MAC301427	FITTING – QUICK DC, 90 DEG	1	
30	MAC187428	SPACER	1	

334. The reversing clutch assembly includes parts #8–15 and hardware (MAC252701, MAC213731, and MAC135799).

AUGER ASSEMBLY – RIGHT ARM

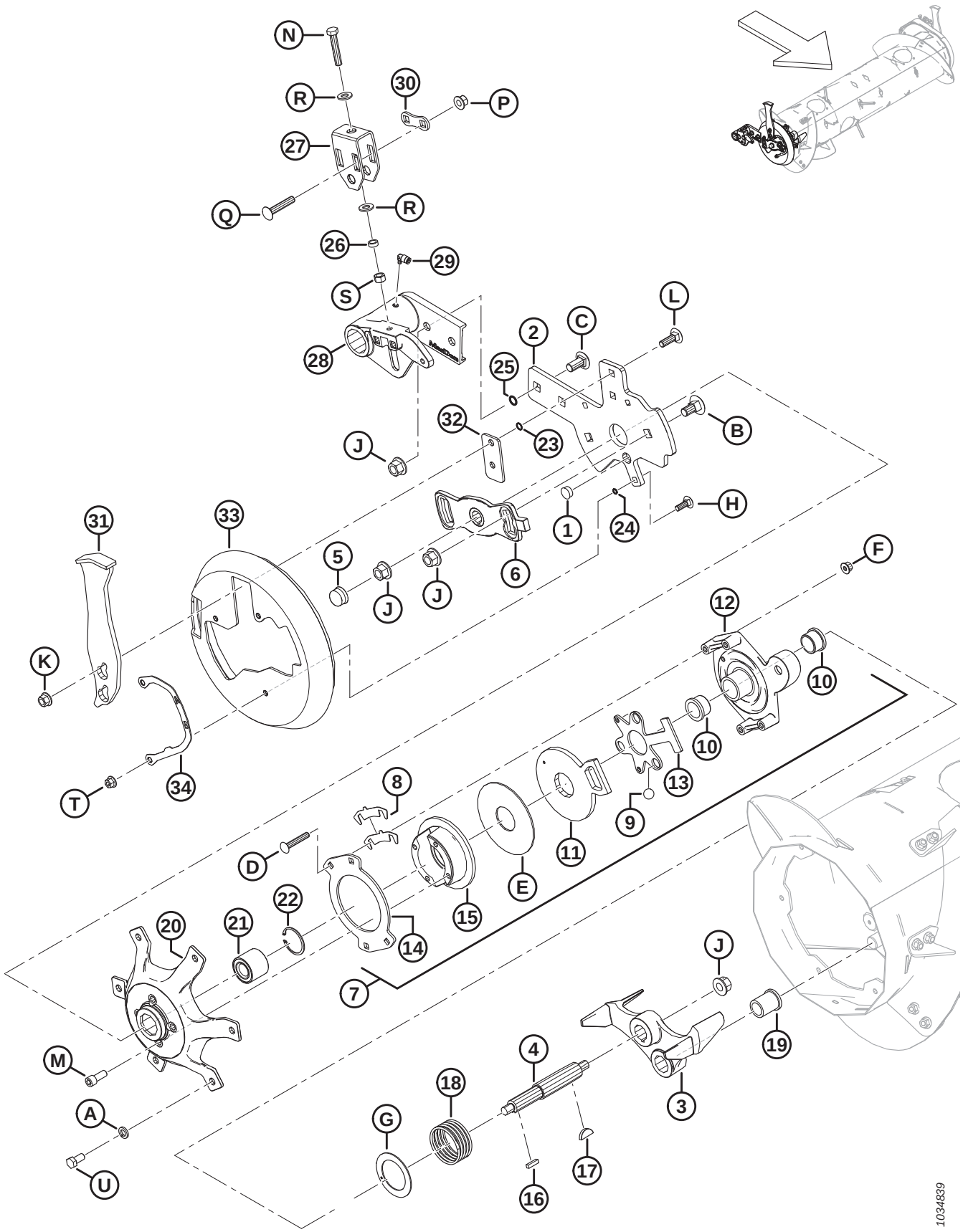

AUGER ASSEMBLY – RIGHT ARM

Ref	Part Number	Description	Qty	Serial Number
31	MAC308648	BUMPER – WELDMENT	1	
32	MAC308056	PLATE – SPACER	1	
33	MAC301994	COVER – AUGER END CAP RH	1	
34	MAC276180	PLATE – INDICATOR RH	1	
A	MAC18638	WASHER – REG. LOCK 1/2 IN. NOM. ID AA1J		
B	MAC252691	BOLT – RHSN M16 X 2 X 35-10.9-AA1J		
C	MAC252638	BOLT – RHSSN M16 X 2 X 35-8.8-AA1J		
D	MAC252701	BOLT – RHSSN TFL M10 X 1.5 X 60-8.8-AA1J		
E	MAC213731	WASHER – PLASTIC		
F	MAC135799	NUT – HEX FLG CTR LOC M10 X 1.5-10		
G	MAC213733	WASHER – THRUST		
H	MAC184662	BOLT – RHSN TFL M10 X 1.5 X 30-8.8-AA1J		
J	MAC136440	NUT – HEX FLG CTR LK M16 X 2-10-AA1J		
K	MAC136431	NUT – HEX FLG CTR LOC M12 X 1.75-10		
L	MAC135900	BOLT – RHSN TFL M12 X 1.75 X 40-8.8-ZINC		
M	MAC50154	SCREW – HEX SOC HD TFL M12 X 1.75 X 30-8.8-AA1J		
N	MAC252541	BOLT – HEX HD TFL M12 X 1.75 X 65-8.8-AA3L		
P	MAC252188	NUT – HEX FLG CTR LK M12 X 1.5-10-AA1J		
Q	MAC252187	BOLT – RHSSN M12 X 1.5 X 65-10.9-AA1J		
R	MAC135369	WASHER – HARDENED ASTM F436 1/2		
S	MAC135156	NUT – HEX M12 X 1.75-10-AA1J		
T	MAC136441	NUT – HEX SER FLG M10 X 1.5-8-AA1J		
U	MAC50155	BOLT – HEX HD TFL M12 X 1.75 X 25-8.8-AA1J		

125 Auger Assembly – Left Arm

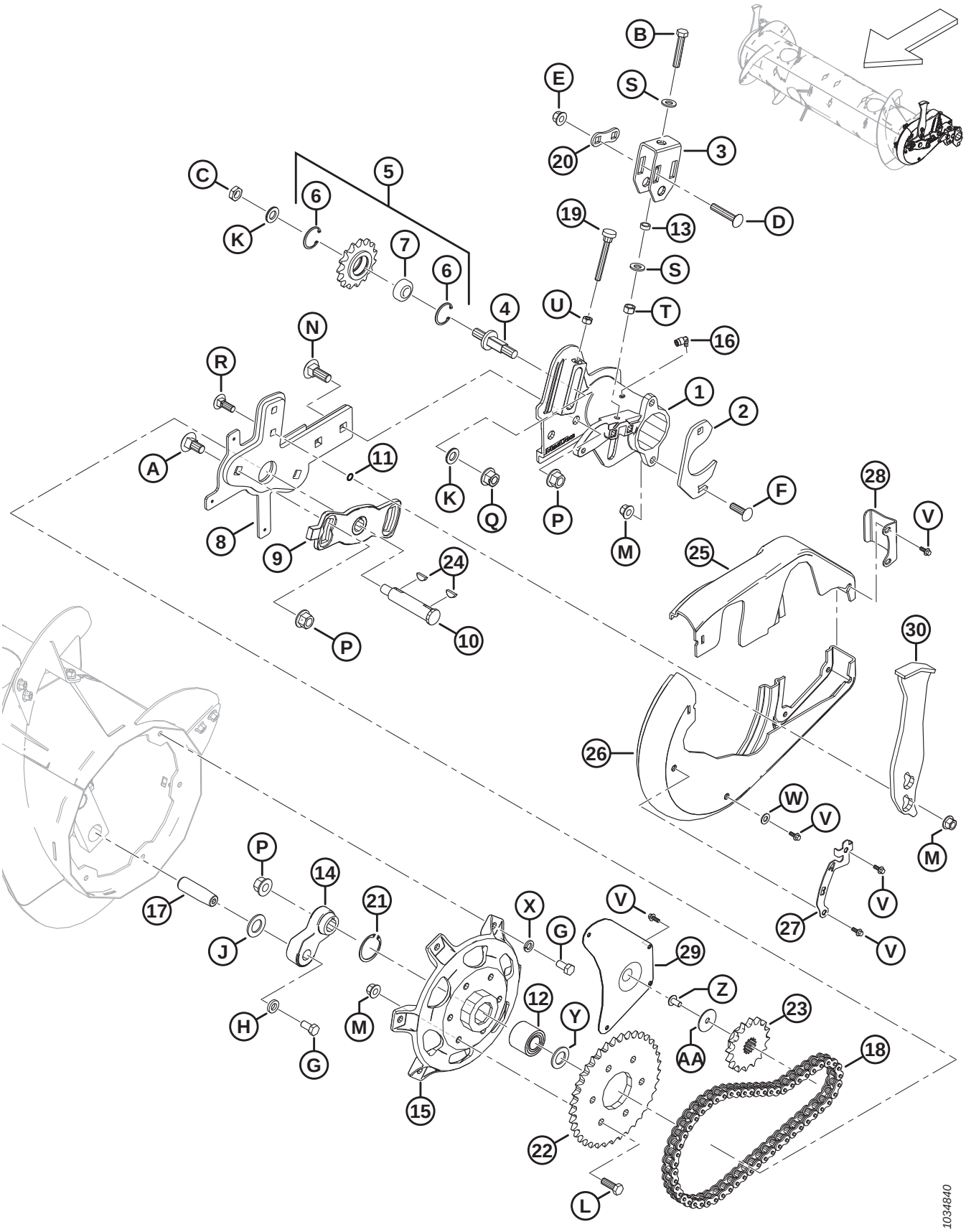

AUGER ASSEMBLY – LEFT ARM

Ref	Part Number	Description	Qty	Serial Number
1	MAC322377	PIVOT – LH AUGER, MACHINING	1	
2	MAC248388	CLAMP – PLATE	1	
3	MAC314136	BRACKET – ADJUSTER	1	
4	MAC213420	SPINDLE – THREADED ADJUSTMENT	1	
5	MAC9333	ASSEMBLY – SPROCKET [335]	1	
6	MAC795	RING – RETAINING	2	
7	MAC9213	BEARING – BALL	1	
8	MAC304931	ARM – LH AUGER SUPPORT WELDT	1	
9	MAC213851	CASTING – TIMING PLATE, MACH	1	
10	MAC301441	SHAFT – AUGER	1	
11	MAC183508	O-RING – 1.78 X 10.82	2	
12	MAC337284	BEARING – BALL DBL ROW 52 MM O.D. [336]	1	
	MAC337804	KIT – LH RTD HUB WITH BEARING [337]	A/R	
13	MAC314169	SPACER	1	
14	MAC304521	ARM – FINGER SHAFT CRANK MACH	1	
15	MAC337276	HUB – MACHINING [336]	1	
	MAC337804	KIT – LH RTD HUB WITH BEARING [337]	A/R	
16	MAC301427	FITTING – QUICK DC, 90 DEG	1	
17	MAC248144	PIN – PIVOT	1	
18	MAC220317	CHAIN – RC-60H, 56 PITCHES RIVETED, ENDLESS	1	
19	MAC213857	THUMBSCREW – M10 X 80	1	
20	MAC187428	SPACER	1	
21	MAC21235	RING – INT. RETAINING (2021 AND LATER) [336]	1	
	MAC181649	RING – RETAINING INTERNAL (2020 AND PRIOR) [338]	A/R	
22	MAC151793	SPROCKET – RC 60 A 37 T	1	
23	MAC151691	SPROCKET – RC 60 B 16 T	1	
24	MAC135290	KEY – WOODRUFF(1/4 X 7/8 NOM.)	2	
25	MAC301993	COVER – LH AUGER, SMALL HALF	1	

335. The sprocket assembly includes sprocket (NSS), ball bearing (MAC9213), and two retaining rings (MAC795).
336. For model year 2021 and later.
337. Kit is used to service machines made prior to model year 2021. The kit includes hub (MAC337276), bearing (MAC337284), retaining ring (MAC21235), flat washer (MAC123406), and instructions.
338. Retaining ring (MAC181649) is used to service machines made prior to model year 2021.

AUGER ASSEMBLY – LEFT ARM

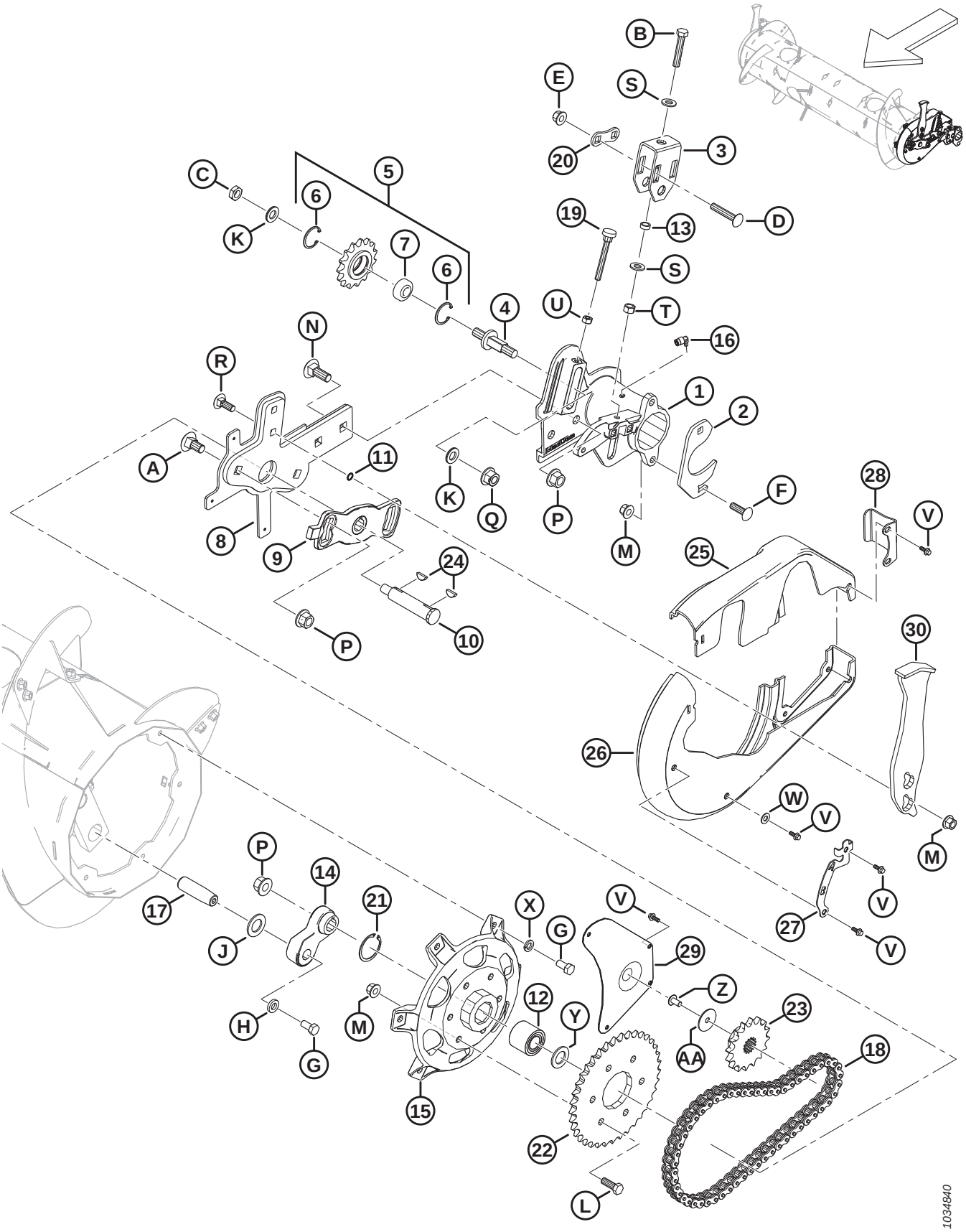

AUGER ASSEMBLY – LEFT ARM

Ref	Part Number	Description	Qty	Serial Number
26	MAC301992	COVER – LH AUGER, LARGE HALF	1	
27	MAC276183	PLATE – INDICATOR LH	1	
28	MAC213112	PLATE – COVER RETAINER	1	
29	MAC213110	PANEL – ACCESS	1	
30	MAC308648	BUMPER – WELDMENT	1	
A	MAC252691	BOLT – RHSN M16 X 2 X 35-10.9-AA1J		
B	MAC252541	BOLT – HEX HD TFL M12 X 1.75 X 65-8.8-AA3L		
C	MAC252288	NUT – HEX THIN FINE M16 X 1.5-04-AA1J		
D	MAC252187	BOLT – RHSSN M12 X 1.5 X 65-10.9-AA1J		
E	MAC252188	NUT – HEX FLG CTR LK M12 X 1.5-10-AA1J		
F	MAC197122	BOLT – RHSSN M12 X 1.75 X 40-8.8-AA1J		
G	MAC50155	BOLT – HEX HD TFL M12 X 1.75 X 25-8.8-AA1J		
H	MAC187518	WASHER – FLAT		
J	MAC156743	WASHER – FLAT		
K	MAC172558	WASHER – NORDLOCK 5/8 IN.		
L	MAC152730	BOLT – HEX HD TFL M12 X 1.75 X 35-10.9-AA1J		
M	MAC136431	NUT – HEX FLG CTR LOC M12 X 1.75-10		
N	MAC136757	BOLT – RHSN M16 X 2 X 45-8.8-AAJ1		
P	MAC136440	NUT – HEX FLG CTR LK M16 X 2-10-AA1J		
Q	MAC136736	NUT – HEX FLG TOP LOCK M16 X 1.5-10-AA2L		
R	MAC136291	BOLT – RHSN TFL M12 X 1.75 X 35-8.8-ZINC		
S	MAC135369	WASHER – HARDENED ASTM F436 1/2		
T	MAC135156	NUT – HEX M12 X 1.75-10-AA1J		
U	MAC30505	NUT – HEX M10 X 1.5-10-AA1J		
V	MAC252639	BOLT – HEX FLG HD M6 X 1 X 16 X SPCL-8.8-AA2L		
W	MAC18598	WASHER – FLAT SAE 13/32 ID X 13/16 IN OD AA1J		
X	MAC18638	WASHER – REG. LOCK 1/2 IN. NOM. ID AA1J		
Y	MAC123406	WASHER – FLAT [336]		
Z	MAC135157	SCREW – MACHINE		
AA	MAC31465	WASHER – FLAT		

126 Auger – Float Linkage

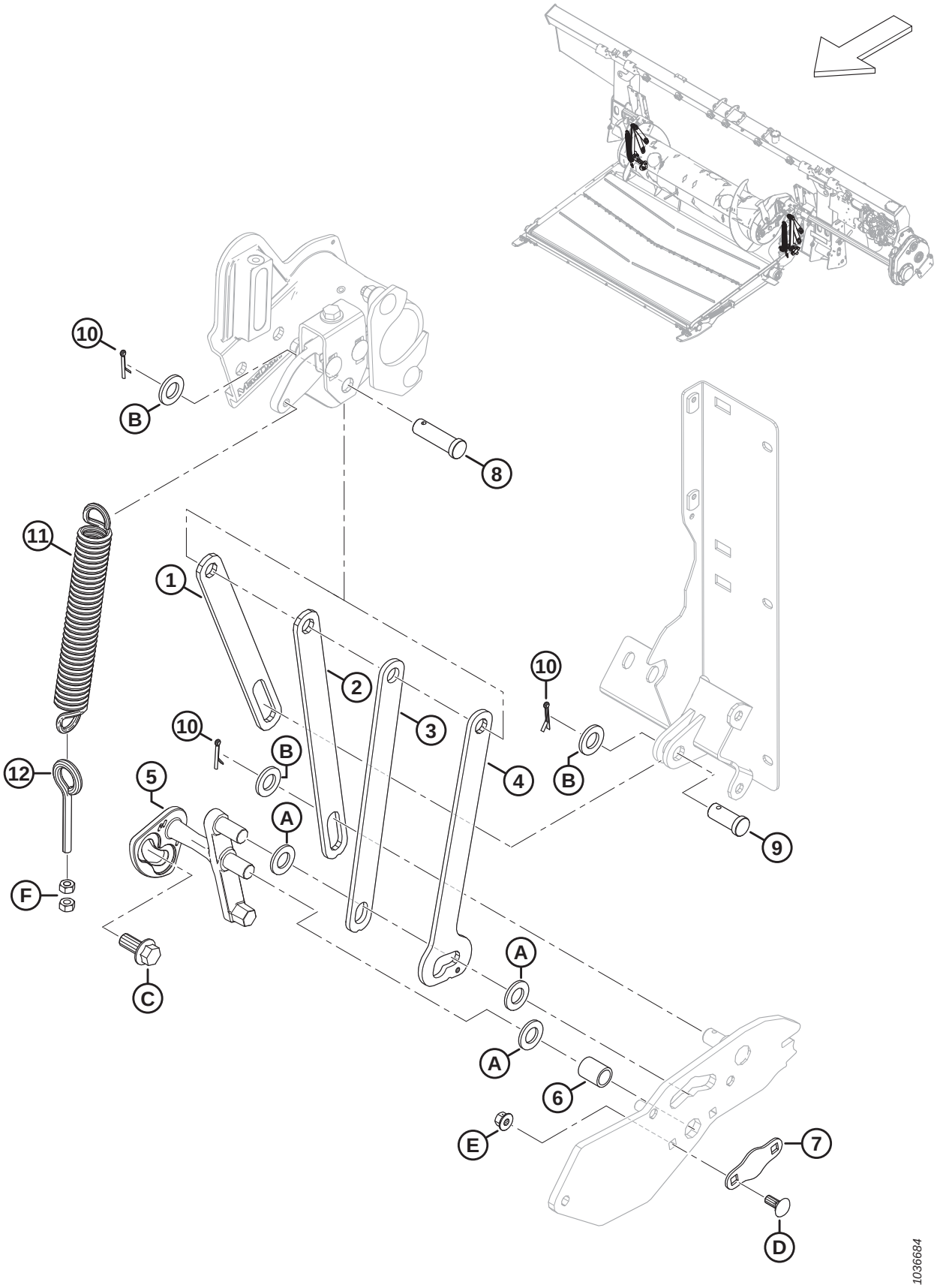

AUGER – FLOAT LINKAGE

Ref	Part Number	Description	Qty	Serial Number
1	MAC322914	BAR – AUGER SUPPORT, LIMITER	2	
2	MAC301805	BAR – AUGER SUPPORT, REAR	2	
3	MAC301806	BAR – AUGER SUPPORT, FRONT	2	
4	MAC301807	BAR – AUGER SUPPORT DUAL POSITION	2	
5	MAC337362	LEVER – LH CRANK LOCK, MACHINED	1	
	MAC337366	LEVER – RH CRANK LOCK, MACHINED	1	
6	MAC248348	TUBE – SPACER	2	
7	MAC248349	PLATE – SECURING	2	
8	MAC322970	PIN – CLEVIS, 50 MM LG	2	
9	MAC11814	PIN – CLEVIS, 30 MM LG	2	
10	MAC18648	PIN – COTTER 3/16 DIA X 1.25 ZP	6	
11	MAC245966	SPRING – EXTENSION	2	
12	MAC231448	EYE BOLT – M10 X 1.5 X 70-4.8-AA1J	2	
A	MAC18601	WASHER – FLAT SAE		
B	MAC112130	WASHER – HARD ASTM F436 3/4 IN. NOM. ID AB0C		
C	MAC136378	BOLT – HEX FLG HD TFL M16 X 2 X 35-10.9		
D	MAC135785	BOLT – RHSN M10 X 1.5 X 25-8.8-AA1J		
E	MAC135799	NUT – HEX FLG CTR LOC M10 X 1.5-10		
F	MAC30505	NUT – HEX M10 X 1.5-10-AA1J		

127 Auger Completion

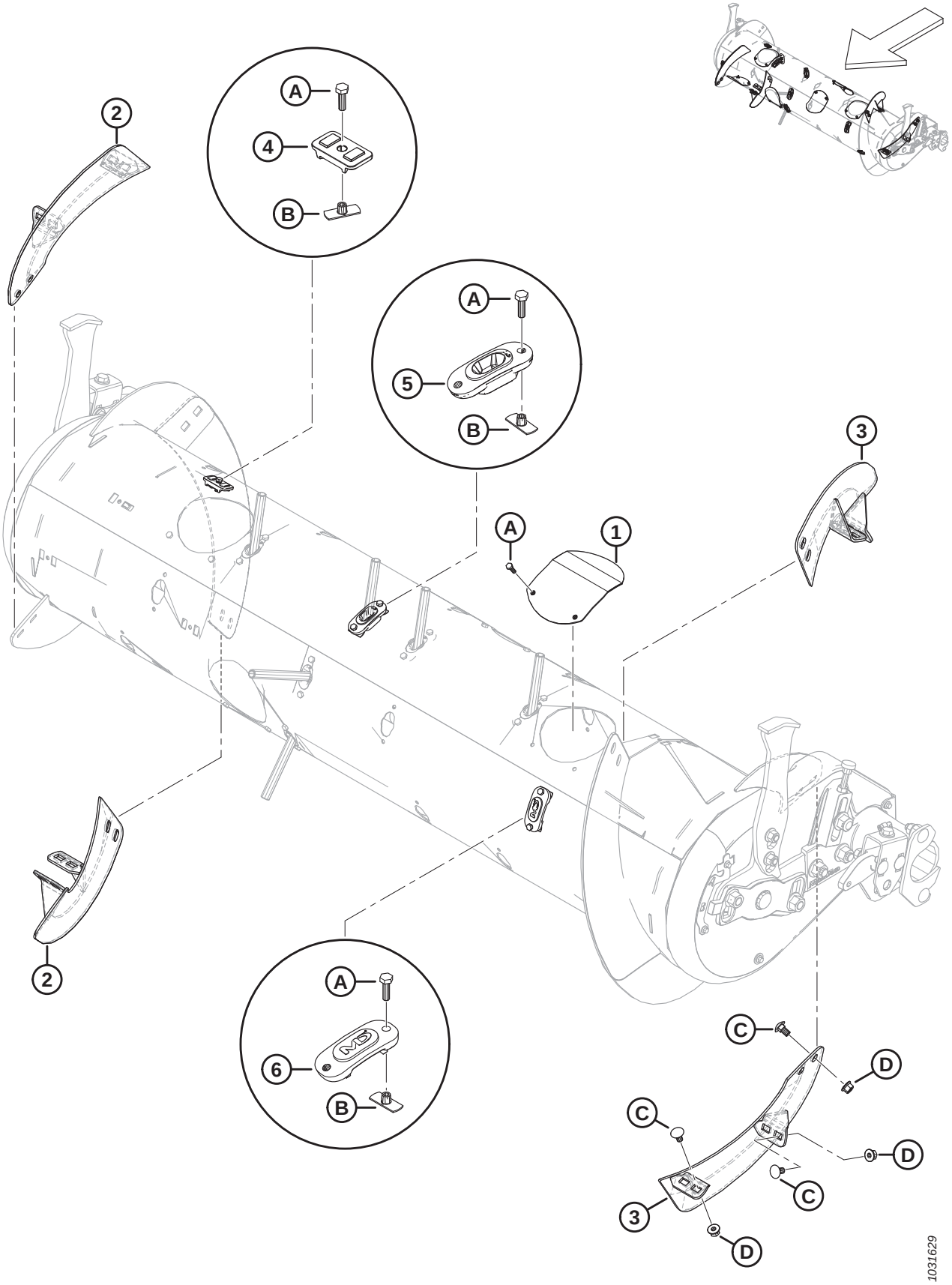

AUGER COMPLETION

Ref	Part Number	Description	Qty	Serial Number
1	MAC304494	COVER WELDMENT	6	
2	MAC287887	FLIGHTING – RH, MEDIUM, HIWEAR	2	
3	MAC287888	FLIGHTING – LH, MEDIUM, HIWEAR	2	
4	MAC213084	PLUG – FLIGHTING SLOT	4	
5	MAC337143	GUIDE	22	
6	MAC187137	PLUG	8	
A	MAC252703	BOLT – HEX HD TFL M6 X 1 X 20 X SPCL-12.9-AF0C		
B	MAC197263	NUT – TEE M6 X 1		
C	MAC136178	BOLT – RHSN M10 X 1.5 X 20-8.8-AA1J		
D	MAC135799	NUT – HEX FLG CTR LOC M10 X 1.5-10		

128 Auger Conversion Kits – Fingers and Flighting

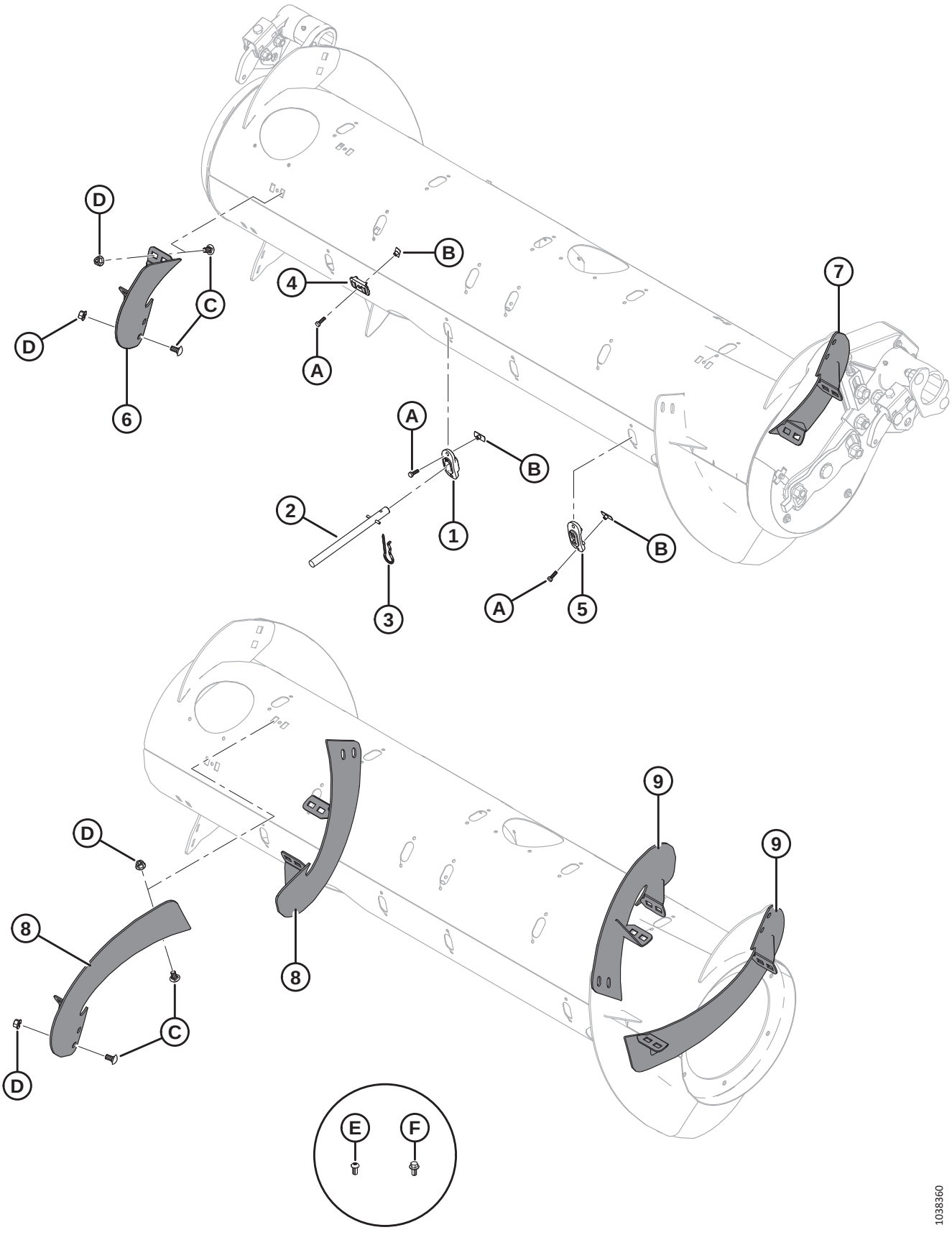

NOTE:

Kits (B-bundle numbers and C-collector numbers) can be purchased from MacDon Whole Goods only.

Ref	Part Number	Description	Qty	Serial Number
	B7343	KIT – FEED AUGER FINGERS, 4 PCS [339]		
	B7344	KIT – FLIGHTING, SHORT HI-WEAR [340]		
	B7345	KIT – FLIGHTING, LONG HI-WEAR [341]		
	MAC357233	KIT – FLIGHTING, SHORT HI-WEAR [342]		
	MAC357234	KIT – FLIGHTING, LONG HI-WEAR [343]		
1	MAC337143	GUIDE	4	
2	MAC337152	KIT – FINGER [344]	4	
3	MAC123180	PIN – HAIR	4	
4	MAC213084	PLUG – FLIGHTING SLOT	4	
5	MAC187137	PLUG [345]		
6	MAC287887	FLIGHTING, RTD – RH, MED (HI WEAR)	1	
7	MAC287888	FLIGHTING, RTD – LH, MED (HI WEAR)	1	
8	MAC287890	FLIGHTING, RTD – RH, LONG(HI WEAR)	2	
9	MAC287889	FLIGHTING, RTD – LH, LONG(HI WEAR)	2	
A	MAC252703	BOLT – HEX HD TFL M6 X 1 X 20 X SPCL-12.9-AA2L		
B	MAC197263	NUT – TEE M6 X 1		
C	MAC136178	BOLT – RHSN M10 X 1.5 X 20-8.8-AA1J		

339. Includes four solid fingers (MAC337152), guides (MAC337143), hair pins (MAC123180), flighting slots plugs (MAC213084), and hardware. Kits are available through Whole Goods only.
340. Includes one pair of short flighting (MAC287887 and MAC287888), four flighting slots plugs (MAC213084), four plugs (MAC187137), and hardware. Kits are available through Whole Goods only.
341. Includes two pairs of long flighting (MAC287889 and MAC287890), twelve plugs (MAC187137), and hardware. Kits are available through Whole Goods only.
342. Includes one pair of short flighting (MAC287887 and MAC287888), four flighting slots plugs (MAC213084), four plugs (MAC187137), hardware, and instructions.
343. Includes two pairs of long flighting (MAC287889 and MAC287890), twelve plugs (MAC187137), hardware, and instructions.
344. Includes solid finger (not sold separately), spring pin (MAC7642), guide (MAC337143), and instructions.
345. Quantities: B7344 = 4; B7345 = 12

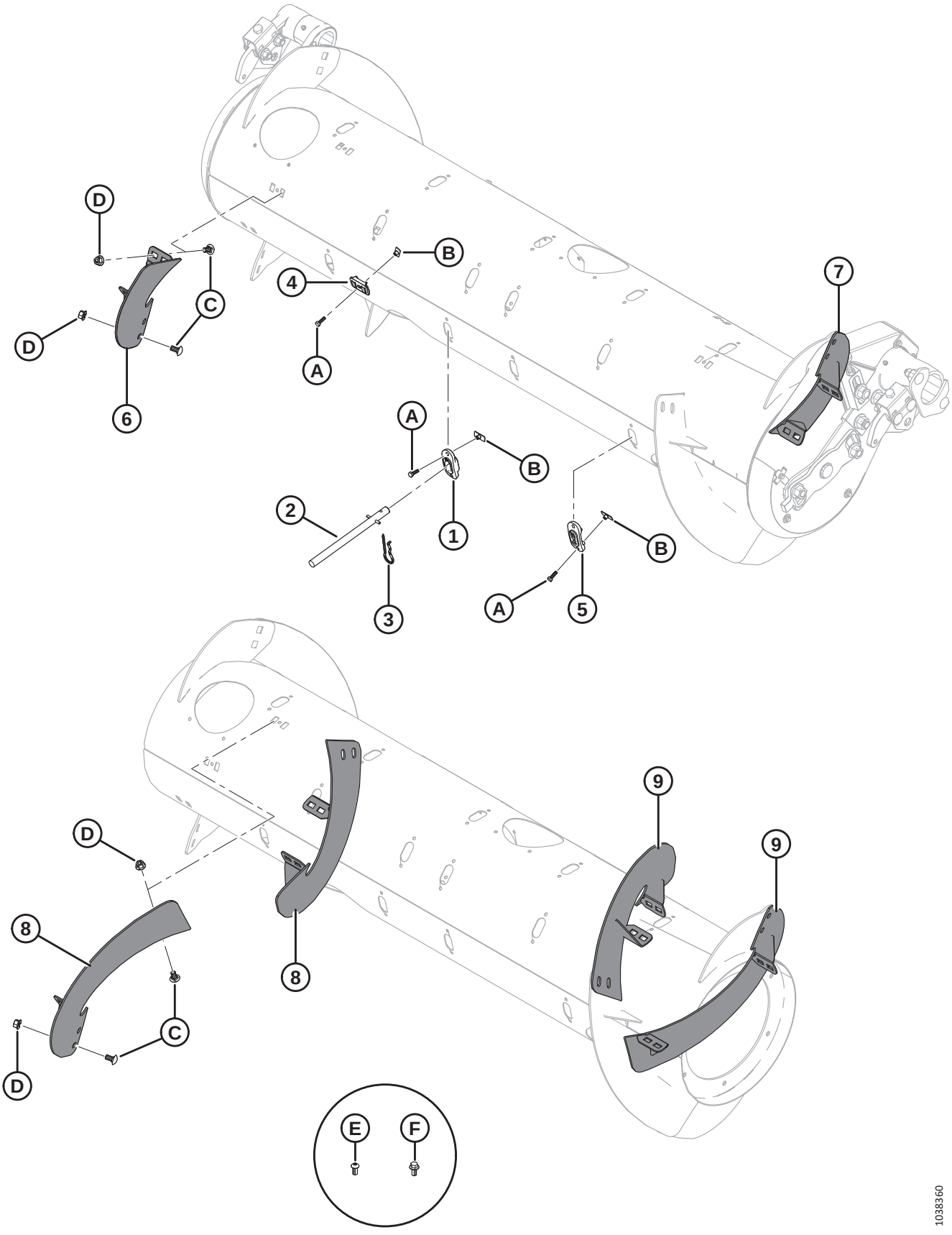
D
B
4
C
D
A
7
6
A
B
2
1
3
B
A
5
9
9
D
8
8
C
D
E
F
1038360

Ref	Part Number	Description	Qty	Serial Number
D	MAC135799	NUT – HEX FLG CTR LOC M10 X 1.5-10-A3L		
E	MAC135723	SCREW – HEX SOC BTN HD M10 X 1.5 X 20-10.9-AA1J [346]		
F	MAC152655	BOLT – HEX FLG HD M10 X 1.5 X 20-8.8-AA1J [347]		

346. For Ultra Narrow Configuration only; used on the new holes drilled in the flighting.
347. For Ultra Narrow Configuration only; used on the new holes drilled in the feed auger.

129 Auger – Crop Deflector Kits

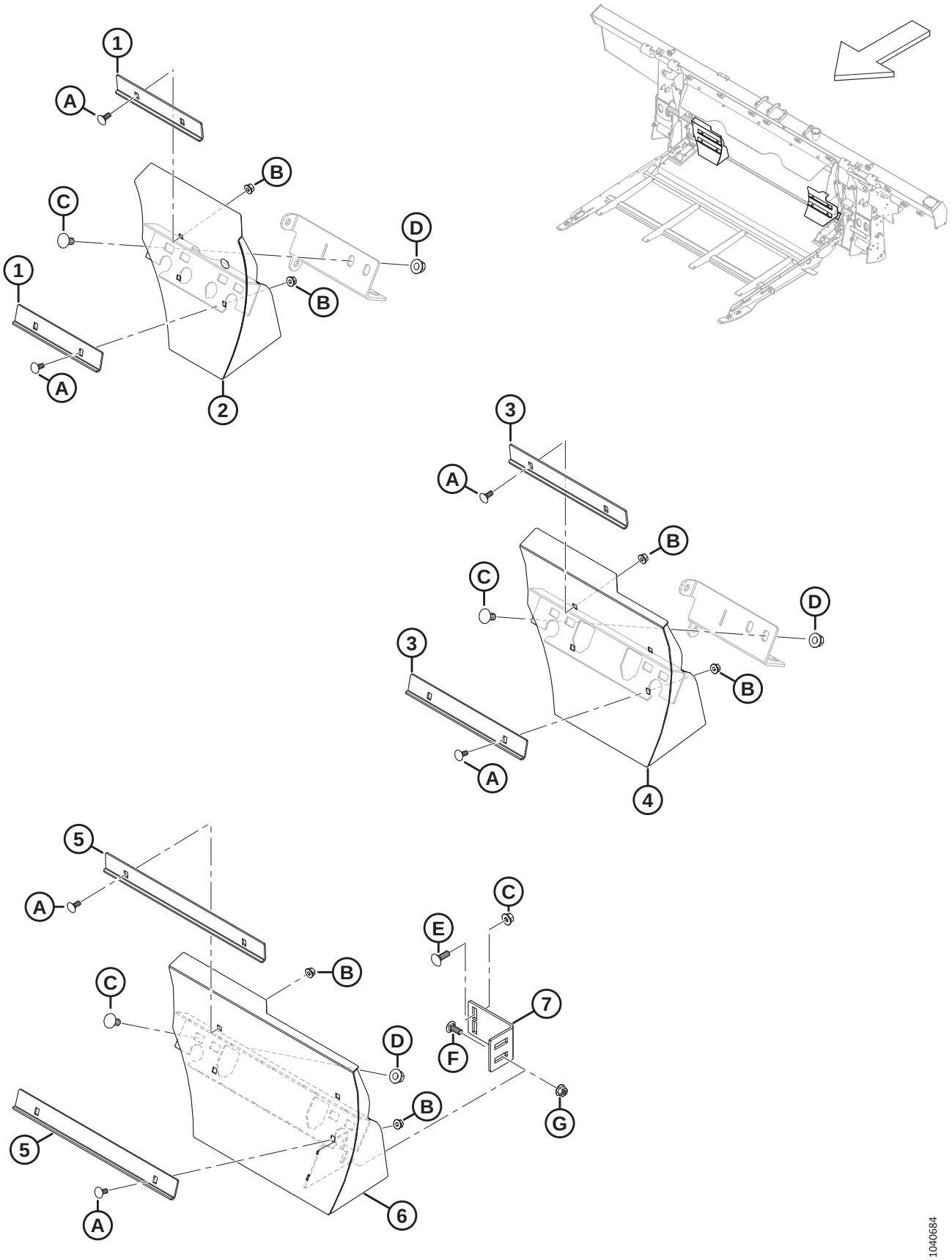

AUGER – CROP DEFLECTOR KITS

NOTE:

Kits (B-bundle numbers and C-collector numbers) can be purchased from MacDon Whole Goods only.

Ref	Part Number	Description	Qty	Serial Number
	B7348	KIT – DEFLECTORS, MEDIUM FEED AUGER [348]		
	B7347	KIT – DEFLECTORS, NARROW FEED AUGER [349]		
	B7314	KIT – DEFLECTORS, ULTRA NARROW [350]		
1	MAC314680	ANGLE – SHORT STRIPPER [351]	4	
2	MAC337777	DEFLECTOR – SHORT RH WELDT [351]	1	
	MAC337778	DEFLECTOR – SHORT LH WELDT [351]	1	
3	MAC328085	ANGLE – LONG STRIPPER [352]	4	
4	MAC337779	DEFLECTOR – LONG RH WELDT [352]	1	
	MAC337780	DEFLECTOR – LONG LH WELDT [352]	1	
5	MAC328758	ANGLE – ULTRA LONG STRIPPER [353]	4	
6	328760	DEFLECTOR – ULTRA LONG WELDT RH [353]	1	
	328756	DEFLECTOR – ULTRA LONG WELDT LH [353]	1	
7	328763	FILLER BRACKET [353]	2	
A	MAC197171	BOLT – RHSN M8 X 1.25 X 20-8.8-ZINC		
B	MAC135337	NUT – HEX FLG CTR LK M8 X 1.25-8-AA1J		
C	MAC152439	BOLT – RHSSN M12 X 1.75 X 25-8.8-AA1J		
D	MAC136431	NUT – HEX FLG CTR LOC M12 X 1.75-10		
E	184662	BOLT – RHSN TFL M10 X 1.5 X 30-8.8-AA1J		
F	136506	BOLT – RHSSN M10 X 1.5 X 25-8.8-AA1J		
G	135799	NUT – HEX FLG CTR LOC M10 X 1.5-10		

348. For feeder opening widths of approximately 1317 mm (52 in.). Kits are available through Whole Goods only.
349. For feeder opening widths of approximately 1115 mm (44 in.). Kits are available through Whole Goods only.
350. For feeder opening widths of approximately 896 mm (35 in.). Kits are available through Whole Goods only
351. Included in B7348.
352. Included in B7347.
353. Included in B7314.

130 Auger – Grease Lines

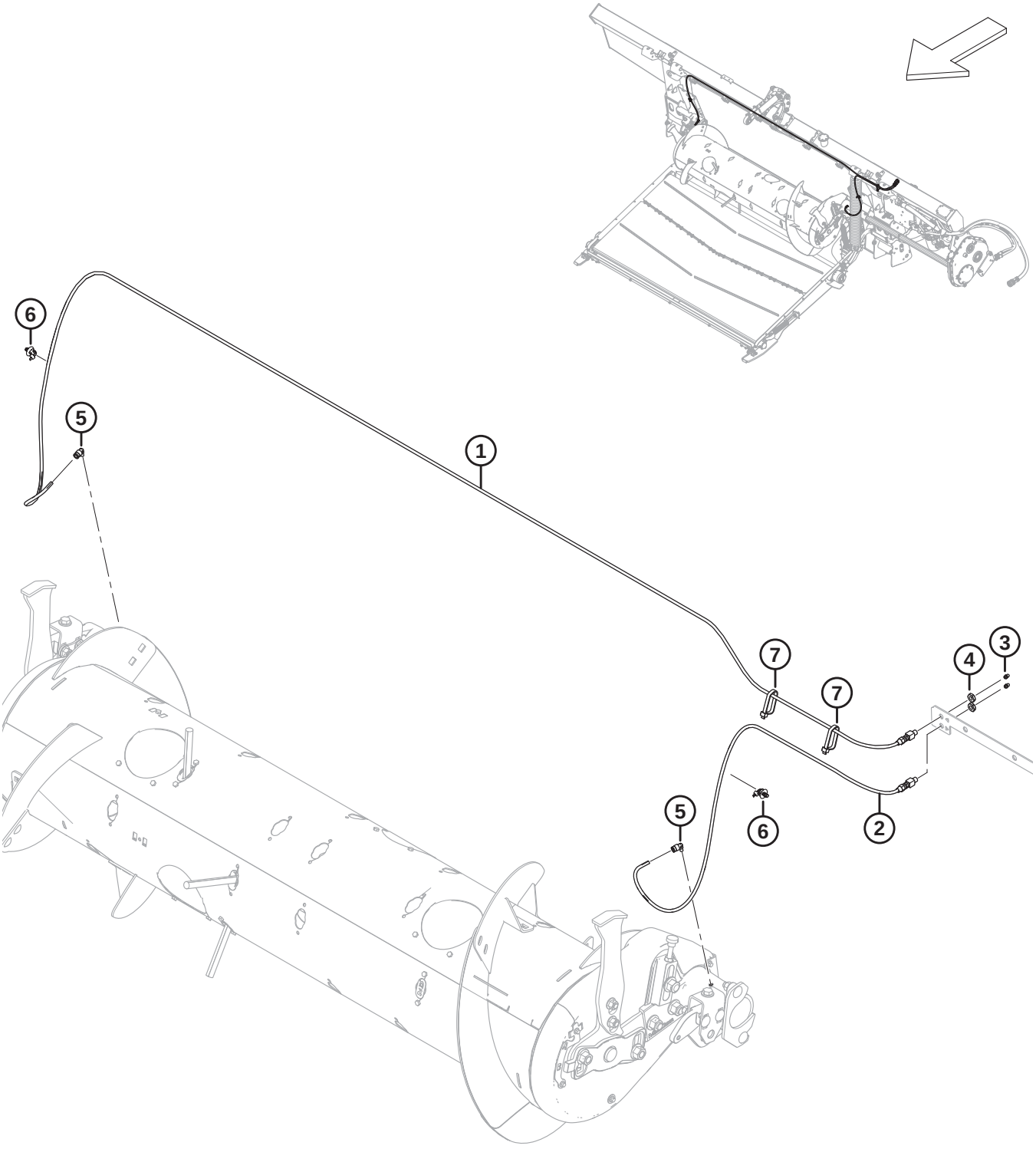

AUGER – GREASE LINES

Ref	Part Number	Description	Qty	Serial Number
1	MAC322961	GREASE LINE – 3170 MM LG [354]	1	
2	MAC322962	GREASE LINE – 1165 MM LG [354]	1	
3	MAC18671	FITTING – LUBE 1/4 - 28 UNF	2	
4	MAC320259	NUT – HEX 1/8-27 NPSM-SPCL-GR2-ZINC	2	
5	MAC301427	FITTING – QUICK DC, 90°	2	
6	MAC136655	FASTENER – FIR TREE MT W/ TIE	2	
7	MAC30753	FASTENER – CABLE TIE, BLACK	2	

354. The grease line includes lube fitting (MAC18671) and hex nut (MAC320259).

131 Float Linkage and Float Setting and Measuring

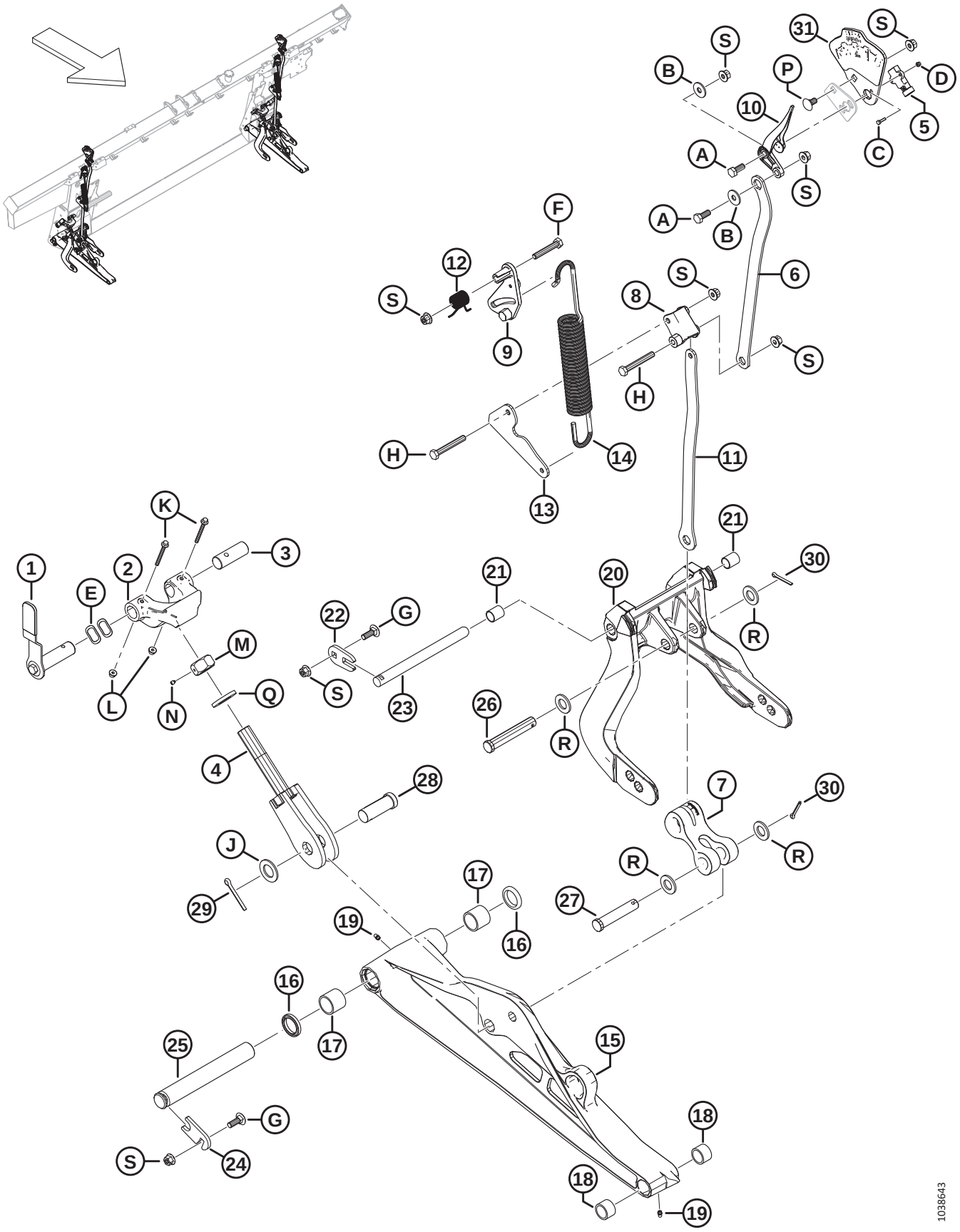

FLOAT LINKAGE AND FLOAT SETTING AND MEASURING

Ref	Part Number	Description	Qty	Serial Number
1	MAC328538	HANDLE ASSY – FLOAT LOCK [355]	2	
	MAC328491	GRIP – HANDLE	2	
2	MAC301513	DOWNSTOP CASTING, MACHINED	2	
3	MAC314276	PIN – PIVOT	2	
4	MAC322219	BOLT – WELDMENT	2	
5	MAC328412	SENSOR – ROTARY, 5V, CONTACTLESS	2	
6	MAC337634	PLATE – TOP LINK	2	
7	MAC328133	LINK – ARM	2	
8	MAC337821	LEVER – FSM MACHINED	2	
9	MAC322981	CASTING – FSM LEVER	2	
10	MAC347923	INDICATOR NEEDLE	2	
11	MAC337635	PLATE – BOTTOM LINK	2	
12	MAC322046	SPRING – TORSION	2	
13	MAC337636	PLATE – SPRING LINK	2	
14	MAC322557	SPRING – EXTENSION	2	
15	MAC322132	ASSY – LOWER LINK [356]	2	
16	MAC113222	SEAL KIT [357]		
17	MAC100500	BEARING – NEEDLE	4	
18	MAC49904	BEARING – NEEDLE	4	
19	MAC18671	FITTING – LUBE 1/4 - 28 UNF	4	
20	MAC357492	ASSEMBLY – FLOAT LEVER [358]	2	
21	MAC156501	BUSHING – PLASTIC	4	
22	MAC301633	PLATE	2	
23	MAC335144	PIN – PIVOT	2	
24	MAC212250	PLATE – PIN LOCK	2	
25	MAC248261	PIN	2	
26	MAC156741	PIN – CLEVIS	2	
27	MAC20312	PIN – CLEVIS	2	

355. The handle assembly includes float lock handle (NSS), handle grip (MAC328491), float lock pin (NSS), and hardware (MAC30627, MAC184712).
356. The lower link assembly includes seal kit (MAC113222), two needle bearings (MAC100500), two needle bearings (MAC49904), and two lube fittings (MAC18671).
357. The seal kit includes one seal (NSS) and instructions.
358. The float lever assembly includes two plastic bushings (MAC156501).

FLOAT LINKAGE AND FLOAT SETTING AND MEASURING

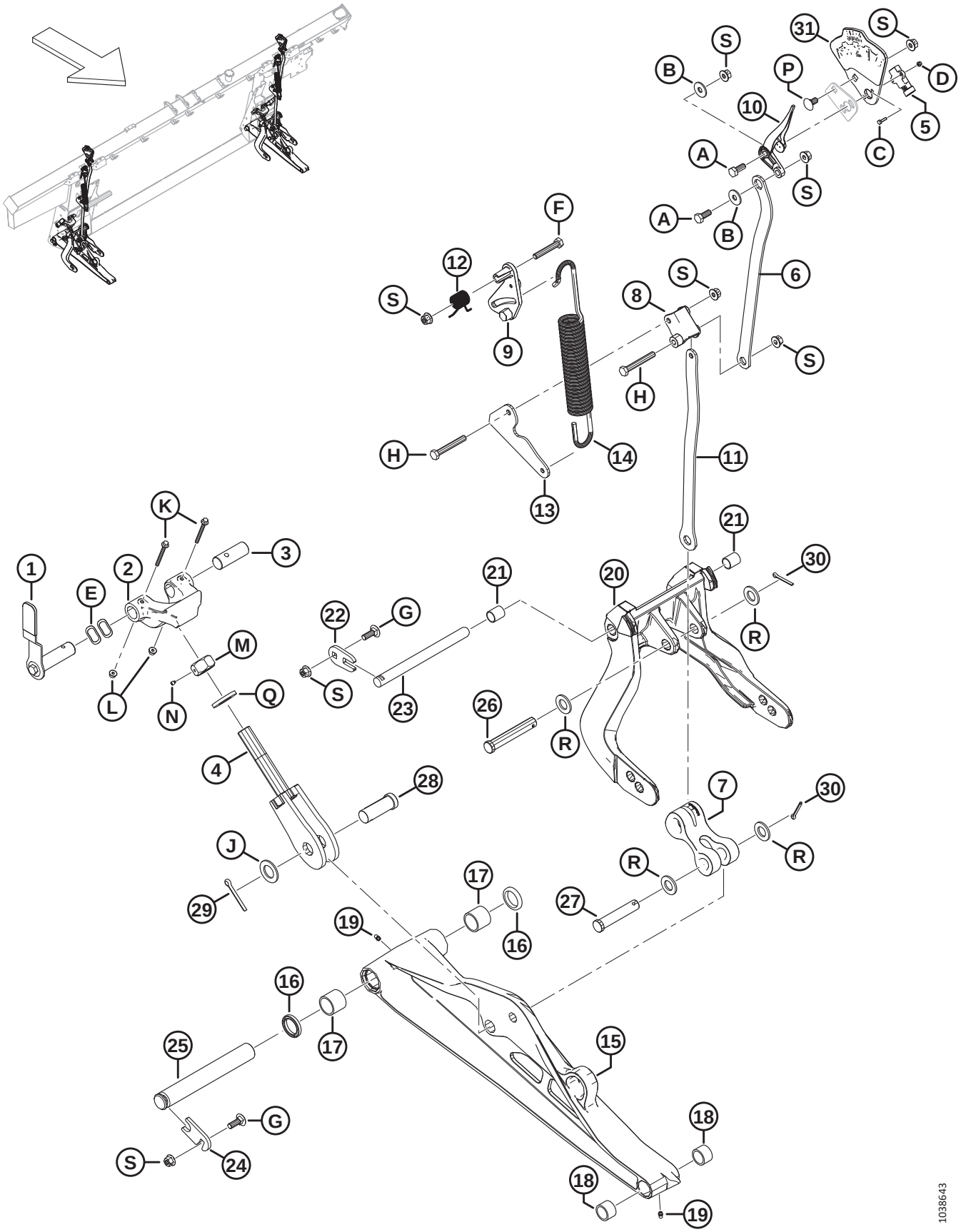

Ref	Part Number	Description	Qty	Serial Number
28	MAC135995	PIN – CLEVIS	2	
29	MAC18609	PIN – COTTER 1/4 DIA X 2 ZP	2	
30	MAC18608	PIN – COTTER 3/16 DIA X 1.5 ZP	4	
31	MAC357455	PLATE – INDICATOR W/ DECAL [359]	2	
A	MAC30627	BOLT – HEX HD TFL M10 X 1.5 X 25-8.8-A3L		
B	MAC184712	WASHER – FLAT LARGE M10-200HV		
C	MAC320389	SCREW – HEX SOC BTN HD M4 X 0.7 X 16-A2-SS		
D	MAC320390	NUT – HEX NYLOC M4 X 0.7-8-A2-SS		
E	MAC252564	WASHER – WAVE		
F	MAC184664	BOLT – HEX HD M10 X 1.5 X 60-8.8-AA1J		
G	MAC184662	BOLT – RHSN TFL M10 X 1.5 X 30-8.8-AA1J		
H	MAC184659	BOLT – HEX HD M10 X 1.5 X 75-8.8-AA1J		
J	MAC156743	WASHER – FLAT		
K	MAC136704	BOLT – HEX FLG HD M6 X 1 X 60-8.8-AA2L		
L	MAC152668	NUT – HEX FLG CTR LOC M6 X 1-8		
M	MAC133047	NUT – DOWNSTOP MACHINING		
N	MAC136596	SCREW – SET CUP POINT 1/4-20 X 1/4		
P	MAC136178	BOLT – RHSN M10 X 1.5 X 20-8.8-AA1J		
Q	MAC31774	WASHER – FLAT 1-1/8-30 HRC-AC0C		
R	MAC18601	WASHER – FLAT SAE		
S	MAC135799	NUT – HEX FLG CTR LOC M10 X 1.5-10		

359. The indicator plate assembly includes indicator plate (NSS), and float setting and measuring decal (MAC328142).

132 Float Springs

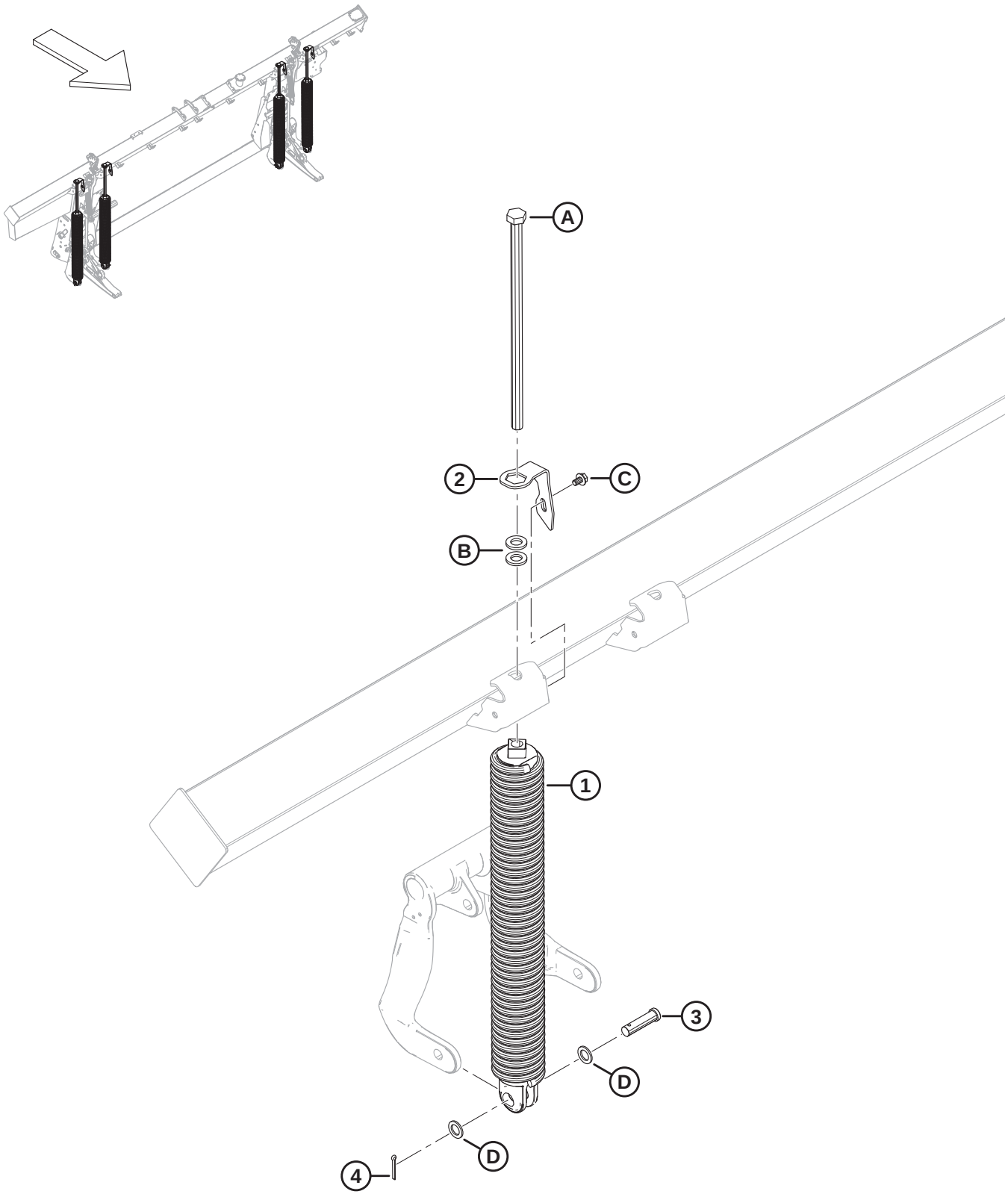

FLOAT SPRINGS

Ref	Part Number	Description	Qty	Serial Number
1	MAC308878	SPRING – ASSEMBLY [360]		
	MAC308879	SPRING – ASSEMBLY HEAVY [360]		
2	MAC322668	LOCK – SPRING	4	
3	MAC30463	PIN – CLEVIS	4	
4	MAC18608	PIN – COTTER 3/16 DIA X 1.5 ZP	4	
A	MAC136088	BOLT – HEX HD TFL M20 X 2.5 X 450 X SPCL-8.8-AA1J		
B	MAC21540	WASHER – HARD ASTM F436 M20-340HV-AB2C		
C	MAC136151	BOLT – HEX FLG HD TFL M10 X 1.5 X 16-8.8-AA1J		
D	MAC1709	WASHER – FLAT		

360. There are four springs on each float module, but the combination of springs (MAC308878 and MAC308879) varies depending on header size. D225, D230, and D235 single-knife headers require 4 x 308878; D241 and D245 double-knife headers require 3 x 308878 and 1 x 308879 on the RH outboard side.

133 Float Module Attaching and Filler Components – FM200 to D2 Series

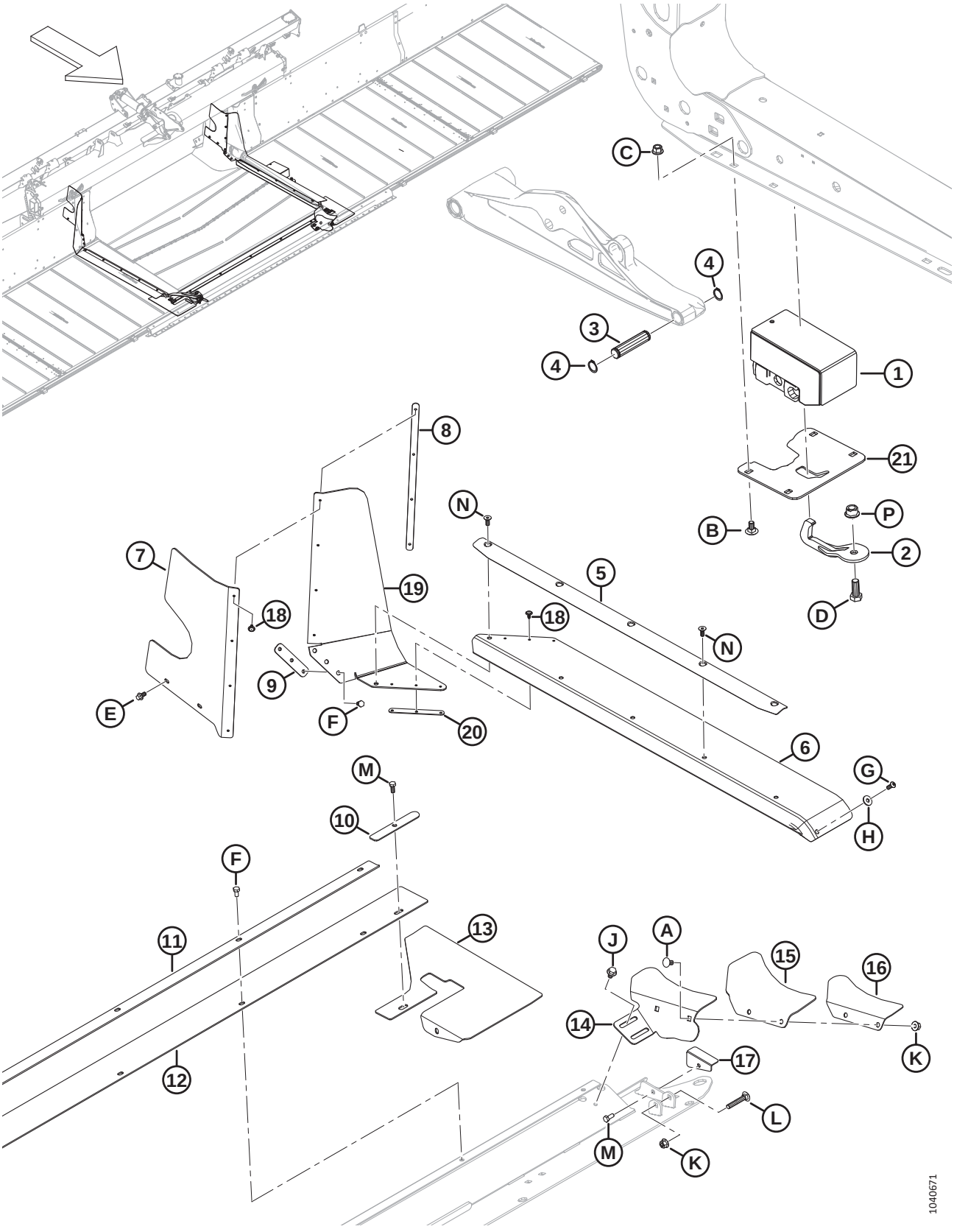

FLOAT MODULE ATTACHING AND FILLER COMPONENTS – FM200 TO D2 SERIES

Ref	Part Number	Description	Qty	Serial Number
1	MAC258700	ASSY – RUBBER BLOCK, RIGID	2	
2	MAC258876	BREAKAWAY HOOK – WELDT	2	
3	MAC258318	PIN – PIVOT	2	
4	MAC18898	RING – EXT RETAINING	4	
5	MAC337407	RETAINER – SEAL AND FILLER	2	
6	MAC347500	FILLER – MID DECK SIDE	2	
7	MAC328348	FILLER – LH REAR UPPER	1	
	MAC328349	FILLER – RH REAR UPPER	1	
8	MAC276770	PLATE – FILLER RETAINER	2	
9	MAC213713	RETAINER – FILLER MACHINED	2	
10	MAC301127	PLATE – FILLER RETAINER	2	
11	MAC301126	RETAINER – CENTER FILLER	1	
12	MAC295261	FILLER – PAN CENTER	1	
13	MAC295992	FLAP – PAN CORNER FLEX	2	
14	MAC337457	SUPPORT – LH CORNER FILLER	1	
	MAC337463	SUPPORT – RH CORNER FILLER	1	
15	MAC304040	FLAP – CORNER FILLER	2	
16	MAC337456	RETAINER – LH CORNER FILLER	1	
	MAC337464	RETAINER – RH CORNER FILLER	1	
17	MAC276117	RETAINER – PAN FLAP LH	1	
	MAC276062	RETAINER – PAN FLAP RH	1	
18	MAC293053	RIVET – POP	14	
19	MAC347775	FILLER – MID DECK SIDE UPPER	2	
20	MAC347778	PLATE – FILLER RETAINER	2	
21	NSS	SUPPORT – FORMED	2	
A	MAC184657	BOLT – RHSSN M10 X 1.5 X 20-8.8-AA1J		
B	MAC135903	BOLT – RHSN M12 X 1.75 X 25-8.8-ZINC		
C	MAC136431	NUT – HEX FLG CTR LOC M12 X 1.75-10		
D	MAC111528	BOLT – HEX HD TFL M16 X 2 X 40-8.8-AA1J		
E	MAC136485	BOLT – HEX FLG HD TFL M8 X 1.25 X 16-8.8-AA1J		
F	MAC50139	BOLT – HEX HD TFL M8 X 1.25 X 16-8.8-AA1J		
G	MAC320176	SCREW – HEX SOC BTN HD M8 X 1.25 X 20-10.9-AA1J		

FLOAT MODULE ATTACHING AND FILLER COMPONENTS – FM200 TO D2 SERIES

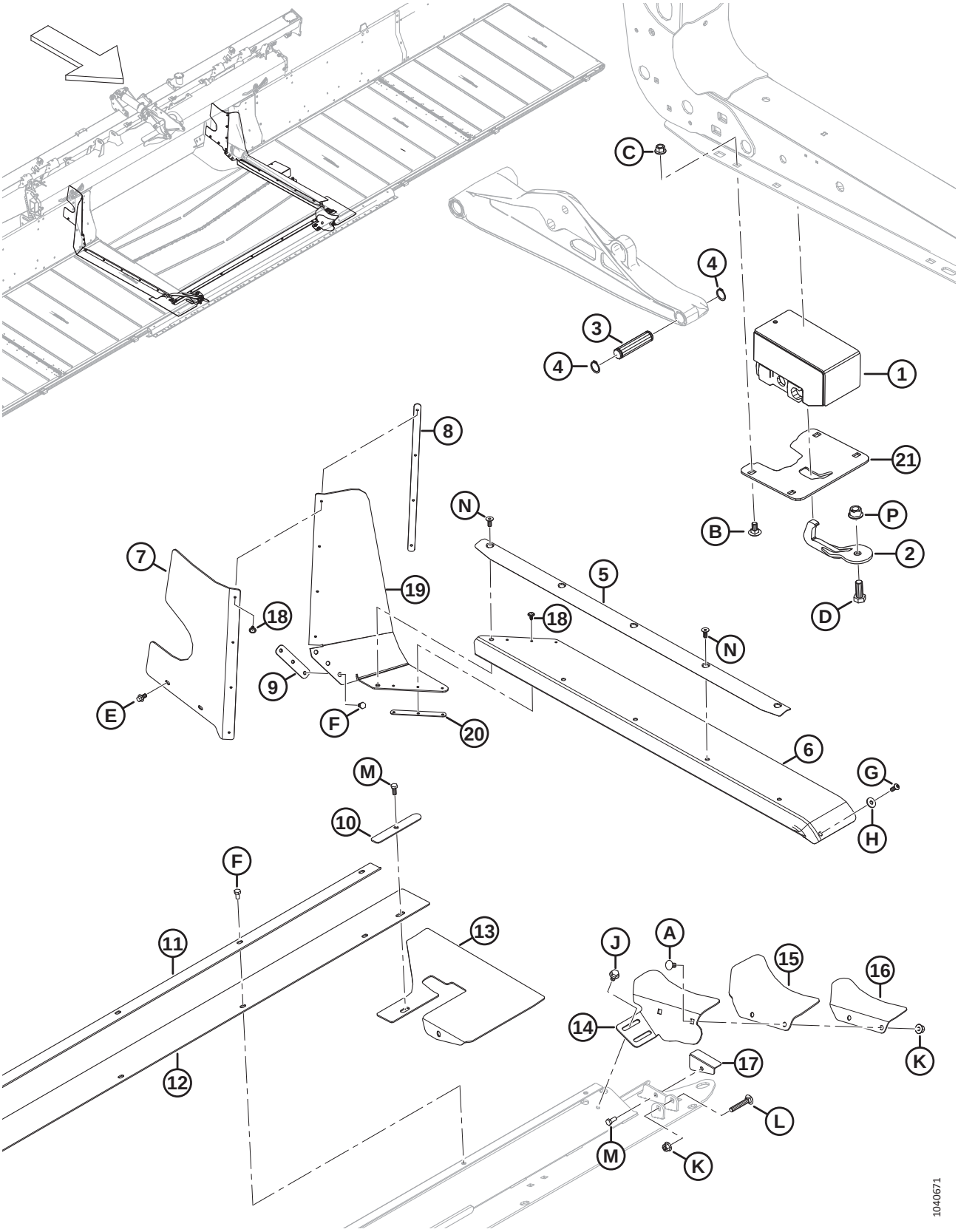

FLOAT MODULE ATTACHING AND FILLER COMPONENTS – FM200 TO D2 SERIES

Ref	Part Number	Description	Qty	Serial Number
H	MAC184709	WASHER – FLAT LARGE M8-200HV		
J	MAC136231	BOLT – HEX SER FLG HD M10 X 1.5 X 16 X SPCL-8.8		
K	MAC135799	NUT – HEX FLG CTR LOC M10 X 1.5-10		
L	MAC136113	BOLT – RHSN M10 X 1.5 X 60-8.8-AA1J		
M	MAC30715	BOLT – HEX HD TFL M8 X 1.25 X 20-8.8-AA1J		
N	MAC136592	SCREW – HEX SOC CSK HD TFL M8 X 1.25 X 20-8.8-ZINC		
P	MAC152520	NUT – HEX FLG TECH LK M16 X 2-10-AA1J		

134 Feed Deck – Frame, Pivot Pins, and Front Support

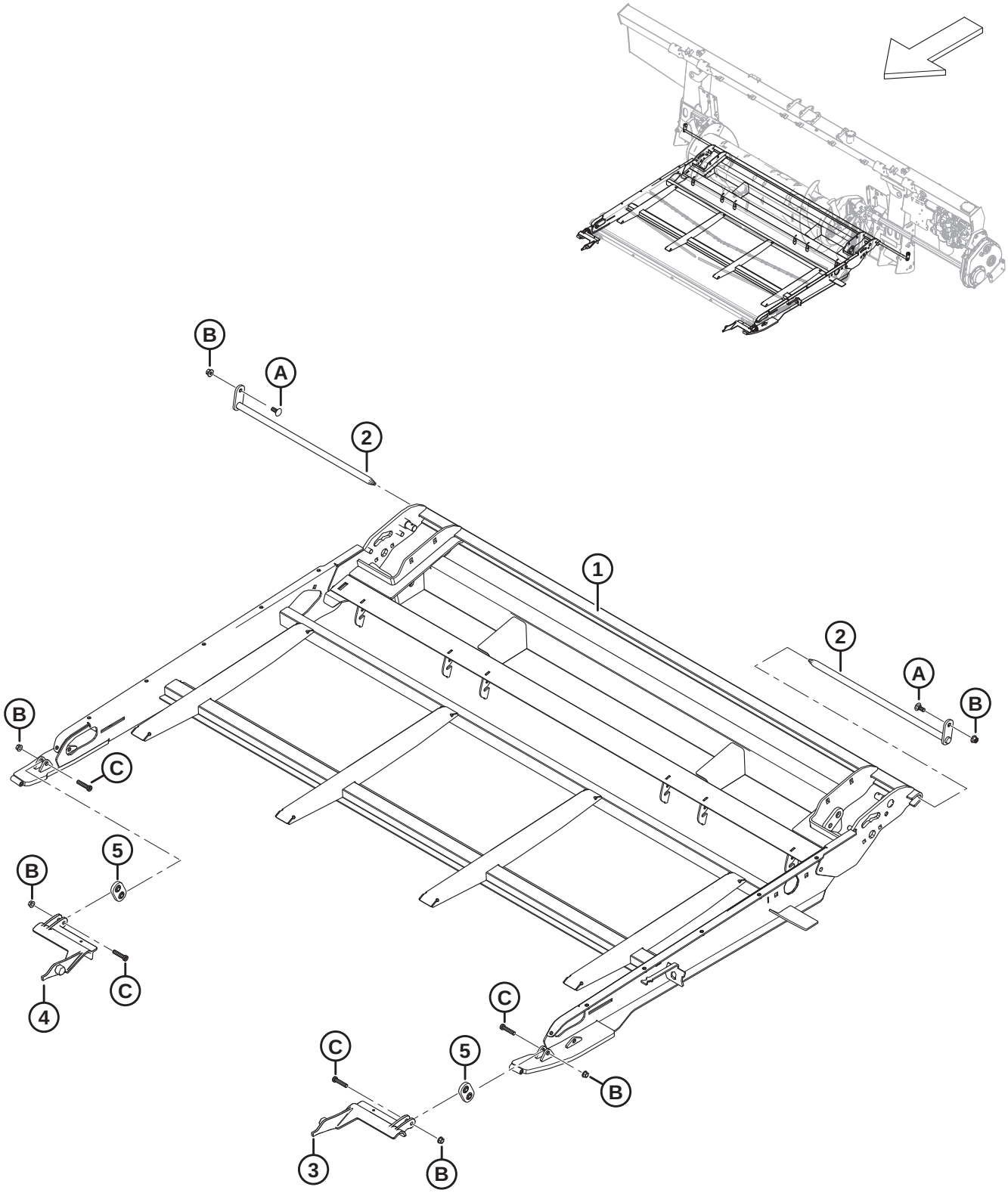

1036581

Ref	Part Number	Description	Qty	Serial Number
	MAC357386	ASSY – FEED DECK [361]	1	
1	MAC347665	FRAME – CARRIER, FEED DECK WELDT	1	
2	MAC231368	PIN – DECK PIVOT WELDT	2	
3	MAC213418	SUPPORT – LH ADAPTER LINK MACH	1	
4	MAC213419	SUPPORT – RH ADAPTER LINK MACH	1	
5	MAC308774	SUPPORT – HOOK ASSY	2	
A	MAC135785	BOLT – RHSN M10 X 1.5 X 25-8.8-AA1J		
B	MAC135799	NUT – HEX FLG CTR LOC M10 X 1.5-10		
C	MAC320358	SCREW – HEX SOC HD M10 X 1.5 X 45-SPCL-8.8-ZINC		

361. Complete feed deck assembly. The assembly does not include pivot pins (MAC231368) and associated hardware, but includes all other parts listed in Section *134 Feed Deck – Frame, Pivot Pins, and Front Support, page 379* to Section *137 Feed Deck – Pans and Fillers, page 387*.

135 Feed Deck – Draper

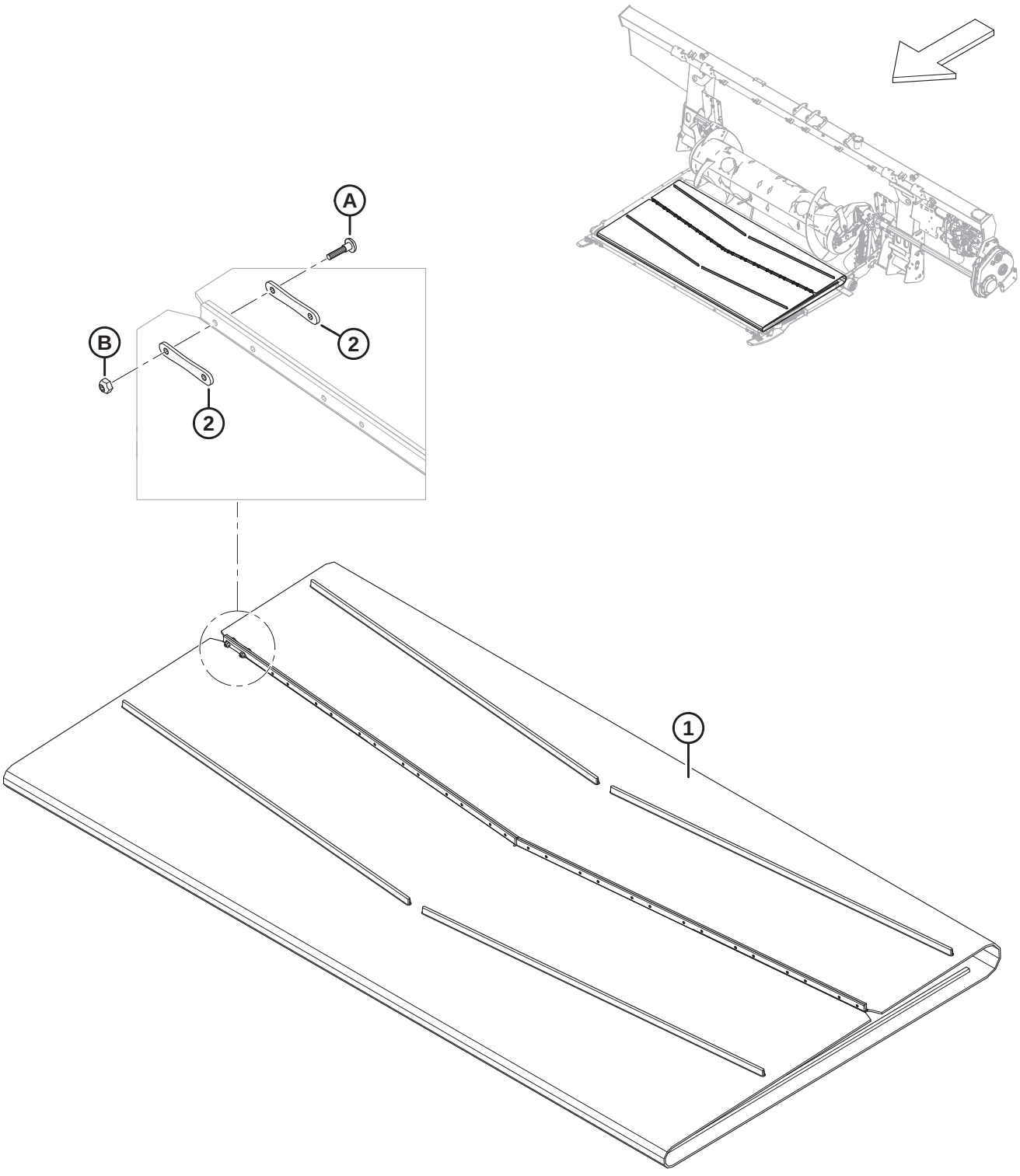

1032730

Ref	Part Number	Description	Qty	Serial Number
1	MAC322555	DRAPER – 1988 MM (78.3 IN.) WIDE X 2205 MM LG	1	
2	MAC130283	STRAP – DRAPER CONNECTOR	28	
A	MAC135630	SCREW – BHRN #12-24 NCX 0.920 IN. LG (QTY 50)		
B	MAC135626	NUT – #12-24 NC (QTY 50)		

136 Feed Deck – Drive/Idler Roller and Tensioner

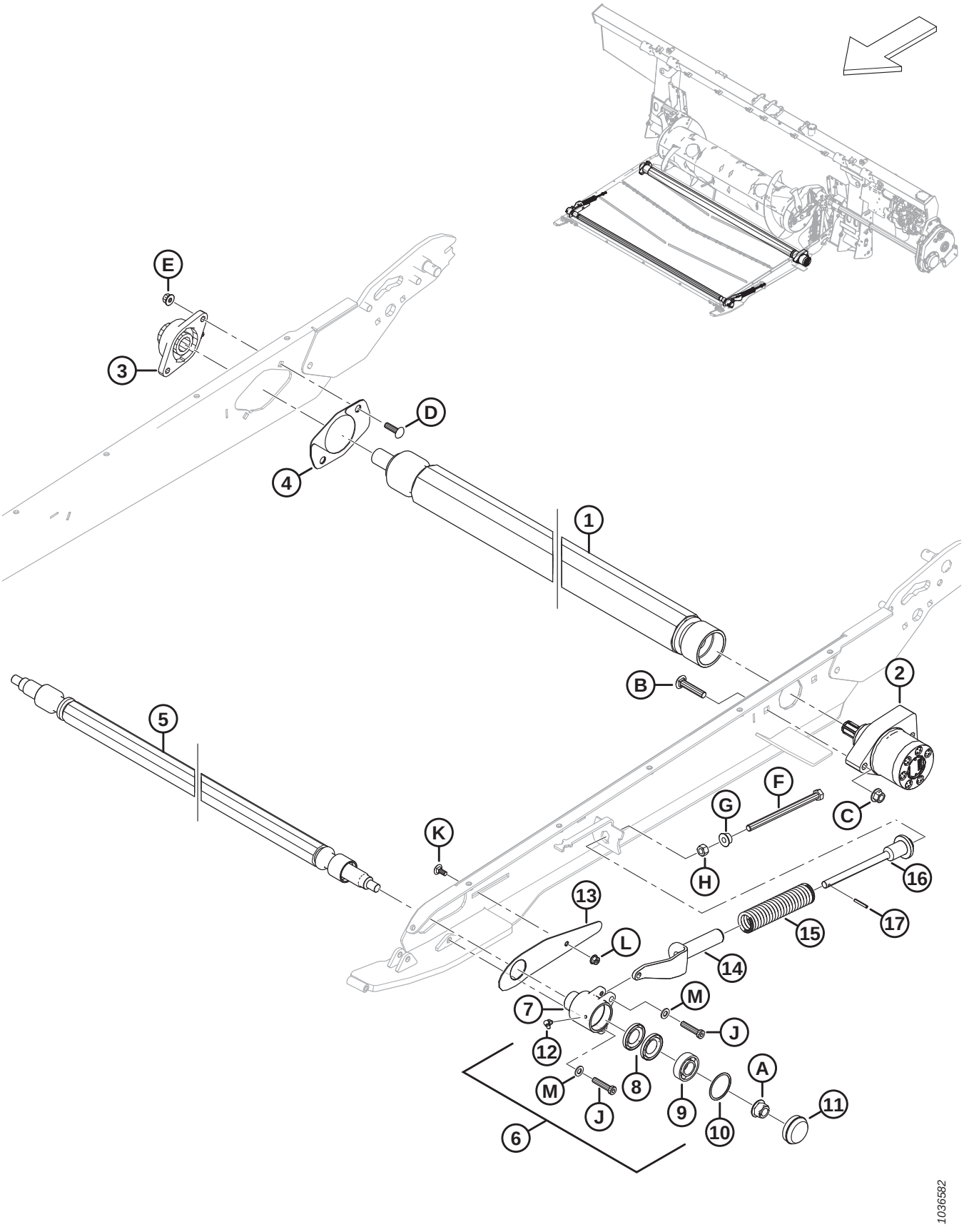

FEED DECK – DRIVE/IDLER ROLLER AND TENSIONER

Ref	Part Number	Description	Qty	Serial Number
1	MAC347483	ROLLER – DRIVE, VULCANIZED	1	
2	MAC295853	MOTOR – HYD	1	
	MAC245316	SEAL KIT		
3	MAC347487	HOUSING – FL206 AND BEARING	1	
4	MAC347553	KIT – DRIVE ROLLER COVER [362]	1	
5	MAC295770	ROLLER – IDLER	1	
6	MAC295399	HOUSING – IDLER CUP ASSY [363]	2	
7	MAC314474	HOUSING – MACHINED IDLER CUP	2	
8	MAC100862	SEAL – OIL	4	
9	MAC118185	BEARING – BALL CYL, 52 MM O.D., 25 MM I.D.	2	
10	MAC118011	RING – RETAINING INTERNAL	2	
11	MAC133372	CAP – DUST	2	
12	MAC21010	FITTING – LUBE 90° 1/4-28 TAPER THD	2	
13	MAC295766	COVER – IDLER ROLLER	2	
14	MAC328128	SUPPORT – DECK TENSION CASTING	2	
15	MAC295407	SPRING – COMPRESSION	2	
16	MAC328143	SUPPORT – SPRING MACHINED	2	
17	MAC13617	PIN – SPRING 3/16 DIA X 1.25 LG	2	
A	MAC152520	NUT – HEX FLG TECH LK M16 X 2-10-AA1J		
B	MAC136308	BOLT – RHSSN M12 X 1.75 X 60-8.8-ZINC		
C	MAC136431	NUT – HEX FLG CTR LOC M12 X 1.75-10		
D	MAC136248	BOLT – RHSSN TFL M10 X 1.5 X 35-8.8-AA1J		
E	MAC135799	NUT – HEX FLG CTR LOC M10 X 1.5-10		
F	MAC252272	BOLT – HEX HD TFL M12 X 1.75 X 180-10.9-ZINC		
G	MAC136036	NUT – HEX SM FLG M12 X 1.75-8-AA1J		
H	MAC184694	NUT – HEX M12 X 1.75-8-AA1J		
J	MAC320358	SCREW – HEX SOC HD M10 X 1.5 X 45-SPCL-8.8-ZINC		
K	MAC197171	BOLT – RHSN M8 X 1.25 X 20-8.8-ZINC		

362. The kit includes two cover plates (not sold separately).
363. The housing assembly includes housing (MAC314474), two oil seals (MAC100862), bearing (MAC118185), and internal retaining ring (MAC118011). The assembly does not include lube fitting (MAC21010) or attaching bolts (MAC135319).

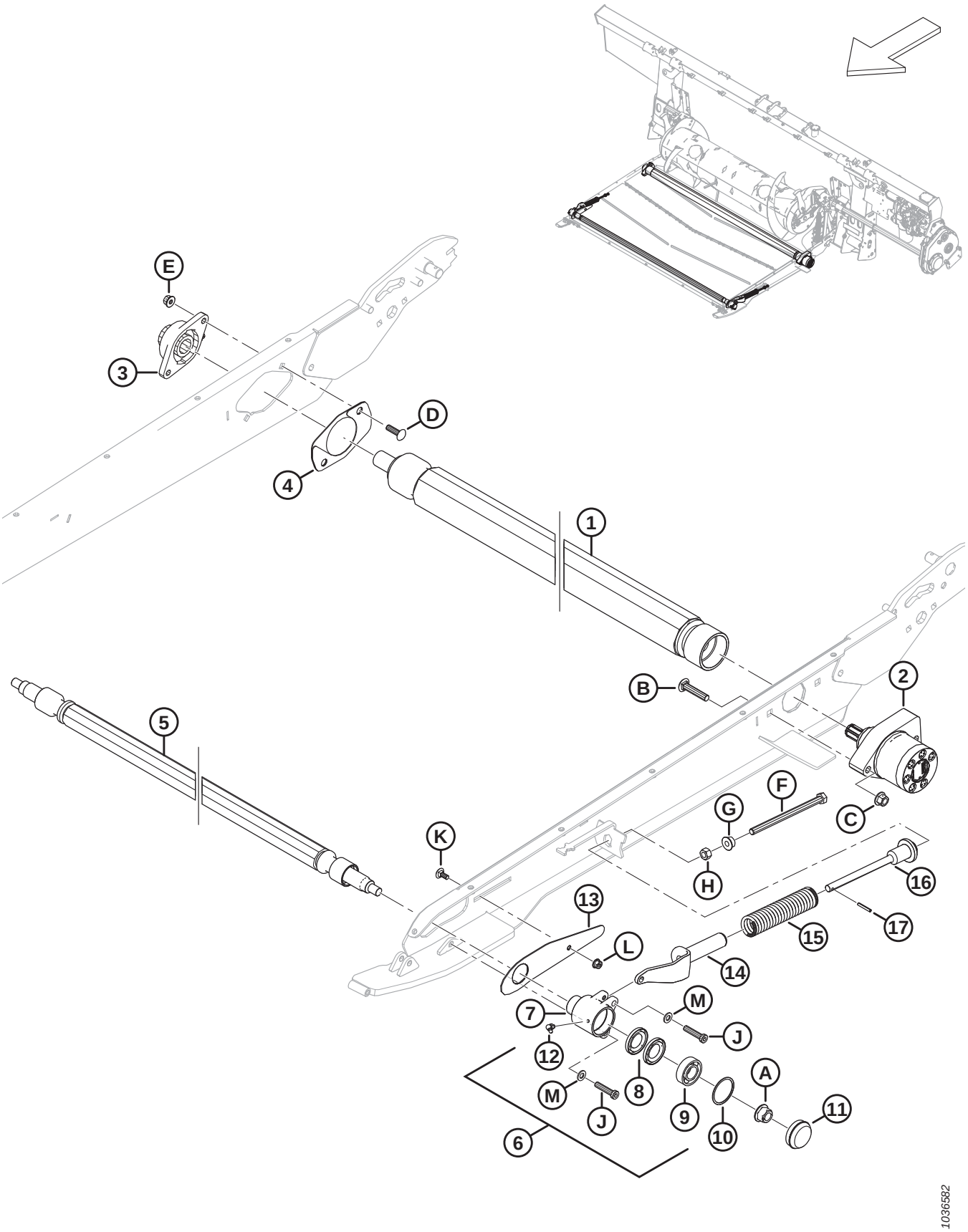
E
3
D
4
1
B
2
5
F
G
C
K
H
16
13
17
15
L
14
M
7
J
12
8
M
J
9
10
A
11
6
1036582

Ref	Part Number	Description	Qty	Serial Number
L	MAC135337	NUT – HEX FLG CTR LK M8 X 1.25-8-AA1J		
M	MAC184711	WASHER – FLAT REG M10-200HV-AA1J		

137 Feed Deck – Pans and Fillers

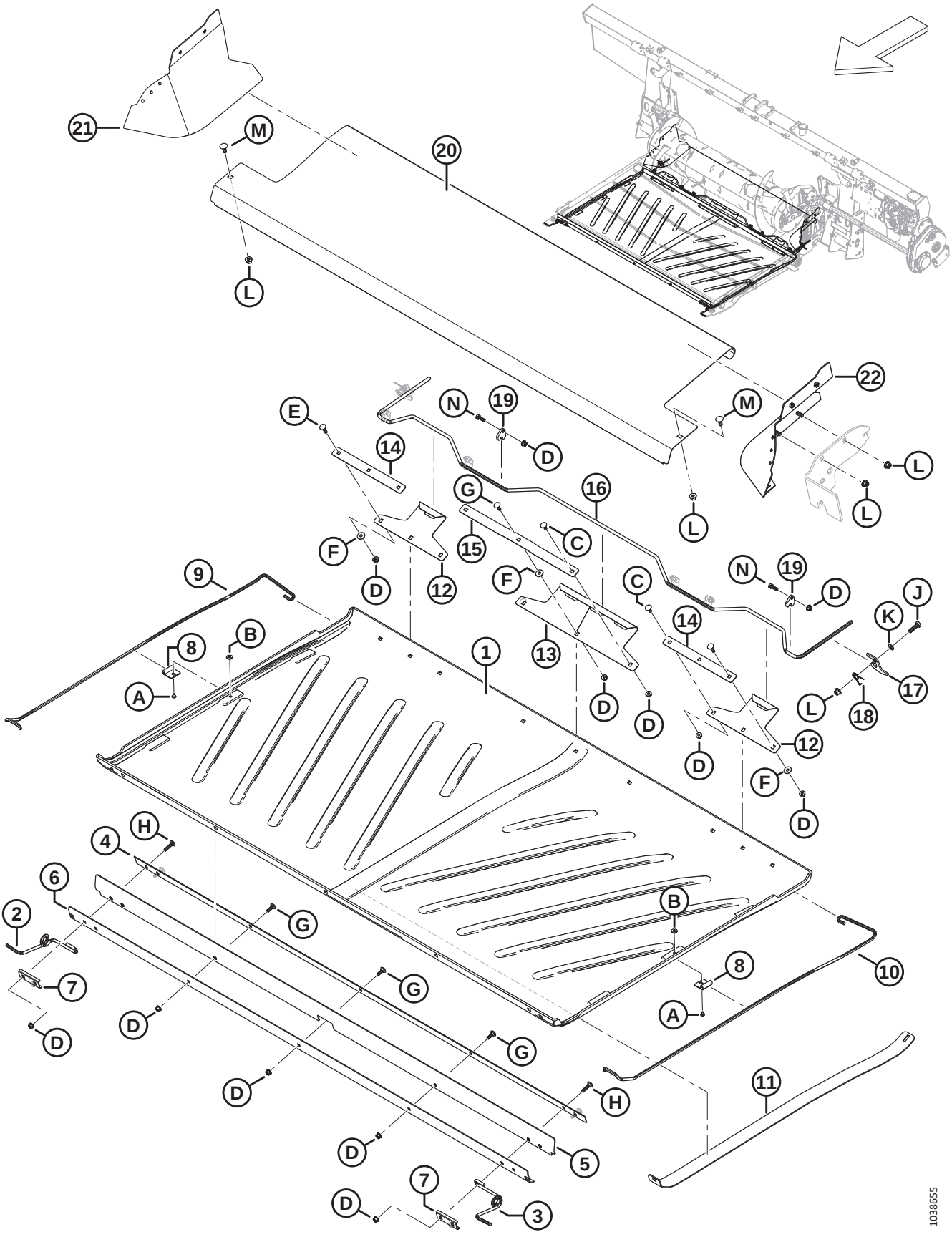

FEED DECK – PANS AND FILLERS

Ref	Part Number	Description	Qty	Serial Number
1	MAC276681	PAN – FEED DECK	1	
2	MAC347691	SUPPORT – PAN FRONT SPRING RH	1	
3	MAC347692	SUPPORT – PAN FRONT SPRING LH	1	
4	MAC295213	PLATE – FRONT BAR INNER	1	
5	MAC295212	FLAP – PAN FRONT	1	
6	MAC295211	PLATE – FRONT BAR OUTER	1	
7	MAC287939	RETAINER – FRONT SPRING	2	
8	MAC248833	RETAINER – PAN SPRING	2	
9	MAC213634	SUPPORT – PAN SPRING RH	1	
10	MAC213633	SUPPORT – PAN SPRING LH	1	
11	MAC213635	SUPPORT – PAN LIFTER	1	
12	MAC240013	HOOK – REAR SIDE	2	
13	MAC240012	HOOK – REAR CENTER	1	
14	MAC231765	BAR – SIDE HOOK	2	
15	MAC231766	BAR – HOOK CENTER	1	
16	MAC240010	HANDLE – PAN LATCH	1	
17	MAC240254	SUPPORT – PAN HANDLE LATCH	2	
18	MAC159020	SPRING – TORSION	2	
19	MAC248914	GUIDE – HANDLE LOCK	6	
20	MAC240264	PAN – FEED DECK STAINLESS	1	
21	MAC335912	FILLER – RH REAR CORNER WELDT	1	
22	MAC335891	FILLER – LH REAR CORNER WELDT	1	
A	MAC252291	SCREW – PAN HD M6 X 1 X 8-8.8-AA1J		
B	MAC252051	NUT – TEE M6		
C	MAC197171	BOLT – RHSN M8 X 1.25 X 20-8.8-ZINC		
D	MAC135337	NUT – HEX FLG CTR LK M8 X 1.25-8-AA1J		
E	MAC190752	BOLT – RHSN M8 X 1.25 X 30-8.8-AA1J		
F	MAC184709	WASHER – FLAT LARGE M8-200HV		
G	MAC184648	BOLT – RHSN M8 X 1.25 X 25-8.8-AA1J		
H	MAC136050	BOLT – RHSN M8 X 1.25 X 35-8.8-AA1J		
J	MAC30628	BOLT – HEX HD M10 X 1.5 X 35-8.8-AA1J		
K	MAC184711	WASHER – FLAT REG M10-200HV-AA1J		

FEED DECK – PANS AND FILLERS

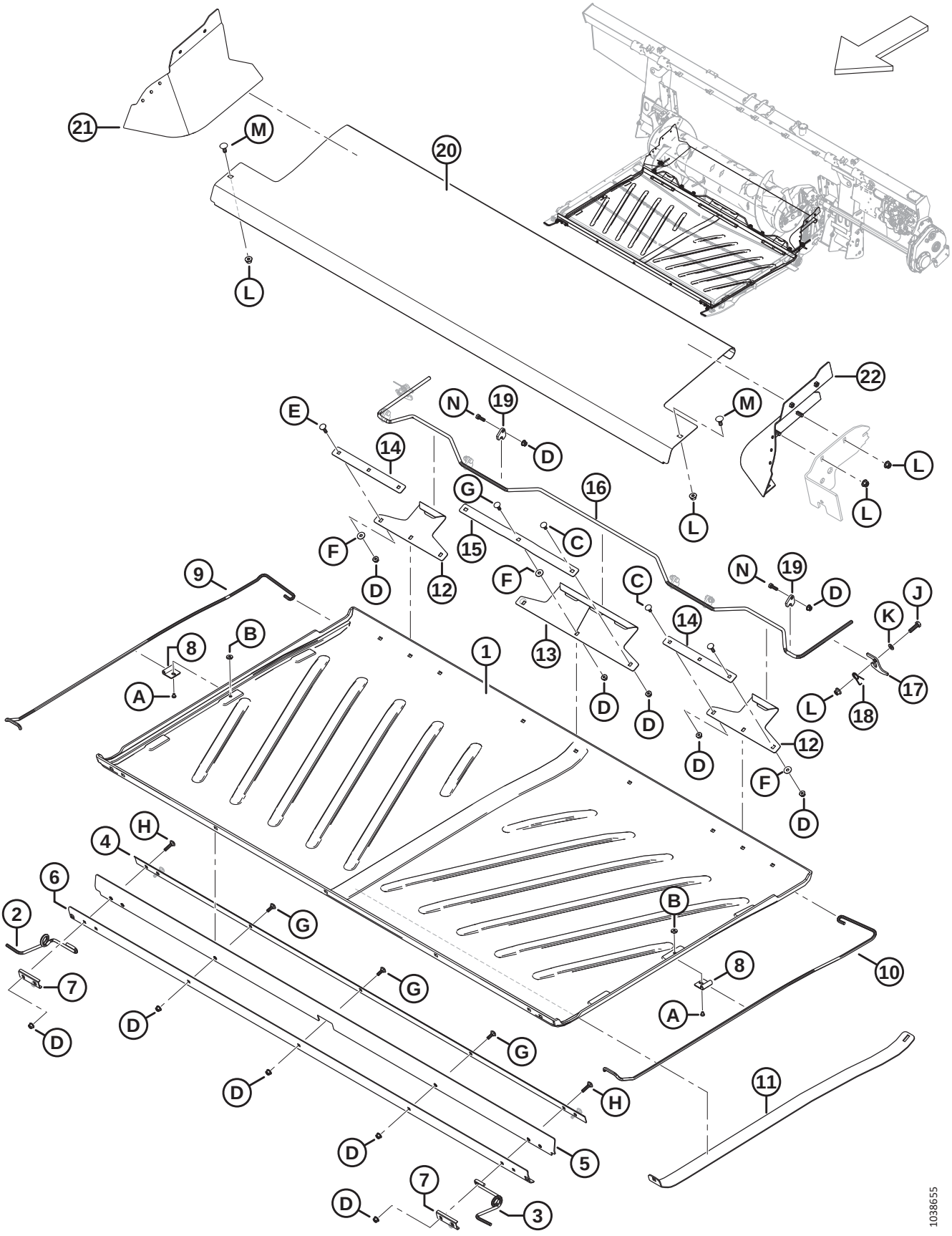

Ref	Part Number	Description	Qty	Serial Number
L	MAC135799	NUT – HEX FLG CTR LOC M10 X 1.5-10		
M	MAC135785	BOLT – RHSN M10 X 1.5 X 25-8.8-AA1J		
N	MAC184652	BOLT – HEX HD TFL M8 X 1.25 X 25-8.8-AA1J		

138 Hydraulics – Center-Link and Header Tilt / Reel Fore-Aft

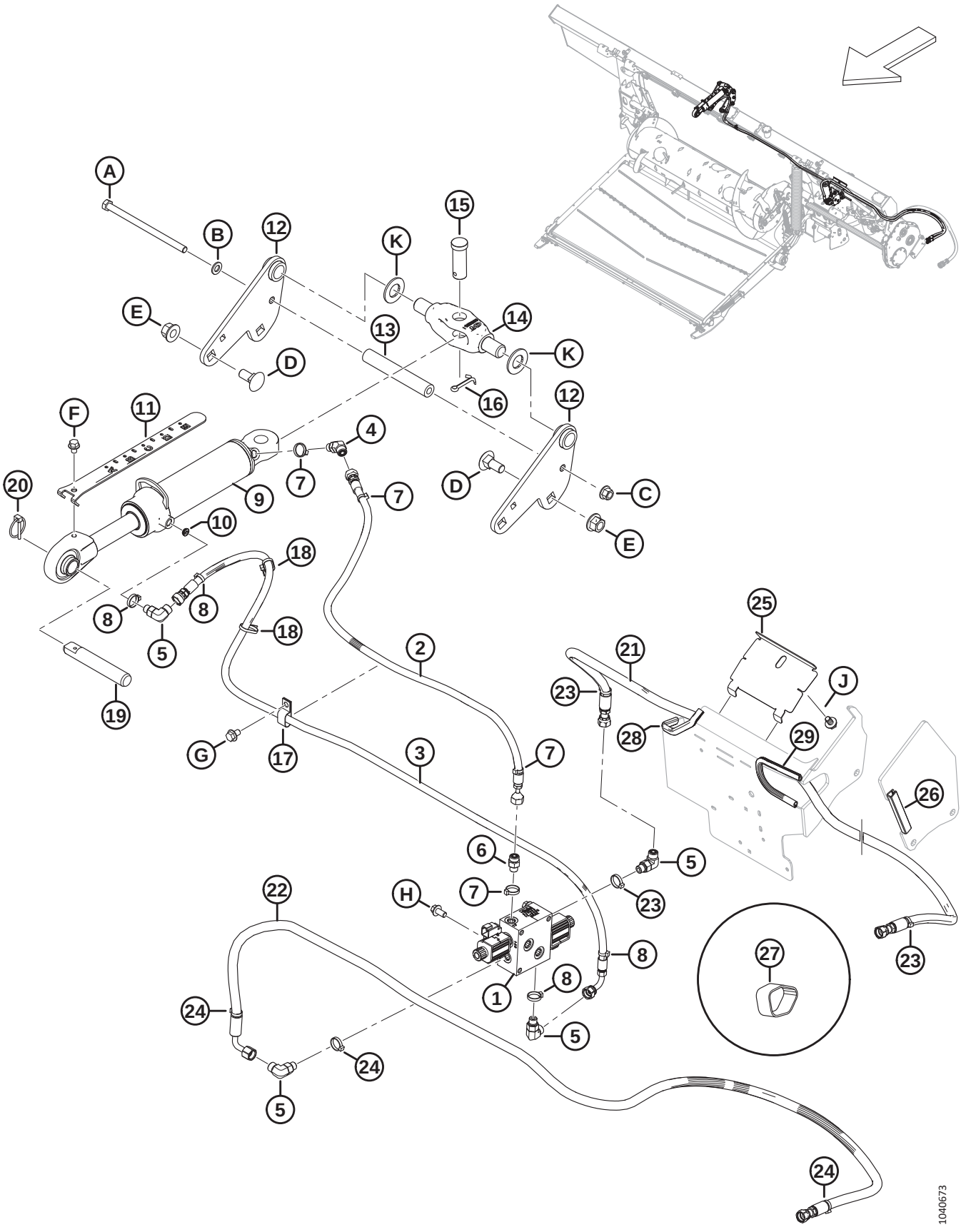

Ref	Part Number	Description	Qty	Serial Number
1	MAC322022	MANIFOLD – SELECTOR VALVE (SV) [364]	1	
	MAC213363	MANIFOLD – SELECTOR VALVE (SV) [365]		
	MAC287449	COIL – 12VDC - .625IN		
	MAC287450	VALVE – POPPET		
	MAC287451	SEAL KIT		
2	MAC314417	HOSE – HYD, TILT FORE	1	
3	MAC314416	HOSE – HYD, TILT AFT	1	
4	MAC136144	FITTING – ELBOW 45° HYD	1	
	MAC135865	O-RING – Ø1.78 X Ø9.25		
	MAC50219	O-RING – Ø1.98 X Ø11.89		
5	MAC136095	FITTING – ELBOW 90° HYD	3	
	MAC135865	O-RING – Ø1.78 X Ø9.25		
	MAC50219	O-RING – Ø1.98 X Ø11.89		
6	MAC135778	FITTING – ADAPTER	1	
	MAC135865	O-RING – Ø1.78 X Ø9.25		
	MAC50219	O-RING – Ø1.98 X Ø11.89		
7	MAC40703	FASTENER – CABLE TIE, BLUE	4	
8	MAC40704	FASTENER – CABLE TIE, ORANGE	4	
9	MAC308658	CYLINDER – TOP LINK, 193 STROKE	1	
	MAC123978	SEAL KIT		
10	MAC252692	RESTRICTOR – #6 ORB X.035 IN.	1	
11	MAC314292	INDICATOR – TILT, 193 STROKE	1	
12	MAC314645	WELDMENT – TOP LINK ANCHOR	2	
13	MAC301318	TUBE – SPACER	1	
14	MAC187660	PIVOT – MACHINING	1	
15	MAC135995	PIN – CLEVIS	1	
16	MAC18609	PIN – COTTER 1/4 DIA X 2 ZP	1	
17	MAC135234	CLAMP – DOUBLE HOSE INSULATED	1	

364. The manifold includes selector valve manifold (MAC213363), one adapter fitting (MAC135778), three 90° elbow fittings (MAC136095), blue fastener (MAC40703), orange fastener (MAC40704), red fastener (MAC40702), and green fastener (MAC49227).
365. The manifold includes two poppet valves (MAC287450) and two coils (MAC287449).

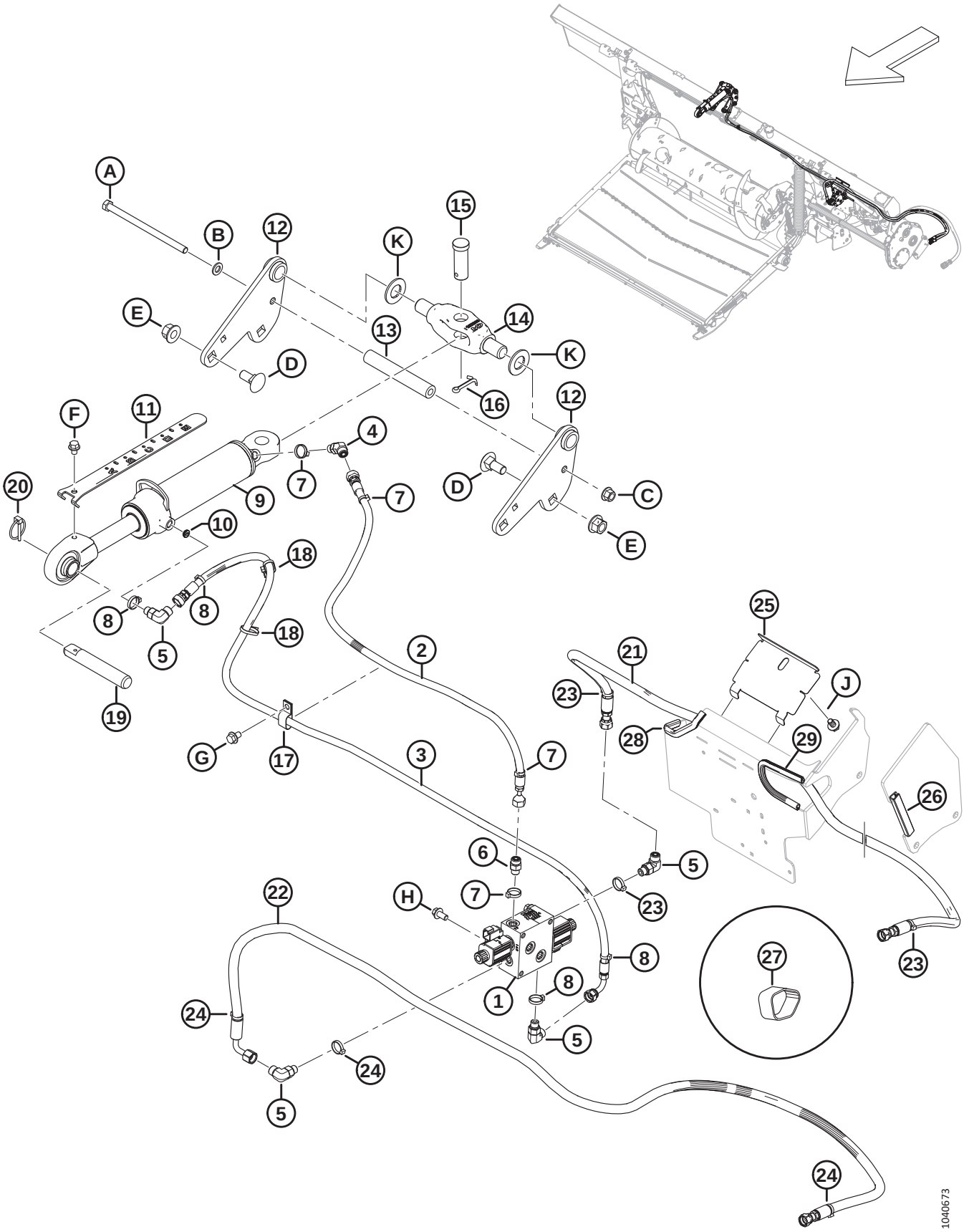
A
B
12
K
15
E
13
14
K
D
16
12
F
11
4
7
D
C
20
9
7
10
E
18
8
8
18
5
2
25
21
J
19
23
28
29
G
17
3
7
26
6
5
H
7
23
22
8
1
8
27
23
24
5
24
5
24
1040673

Ref	Part Number	Description	Qty	Serial Number
18	MAC21763	FASTENER – CABLE TIE, BLACK	2	
19	MAC313734	PIN – CENTER LINK	1	
20	MAC102264	PIN – LYNCH 3/16 X 1 9/16 IN	1	
21	MAC314397	HOSE – HYD, REEL FORE	1	
22	MAC314399	HOSE – HYD, REEL AFT	1	
23	MAC49227	FASTENER – CABLE TIE, GREEN	3	
24	MAC40702	FASTENER – CABLE TIE, RED	3	
25	MAC347949	PANEL – HOSE HOLDER	1	
26	MAC254183	SEAL – EDGE TRIM	1	
27	MAC295927	CINCH STRAP – 8 IN. LG [366]	1	
28	MAC133136	MOULDING	1	
29	MAC45427	MOULDING – RH	1	
A	MAC152395	BOLT – HEX HD M12 X 1.75 X 200-10.9-AA3L		
B	MAC184714	WASHER – FLAT REG M12-300HV		
C	MAC136431	NUT – HEX FLG CTR LOC M12 X 1.75-10		
D	MAC136755	BOLT – RHSN M16 X 2 X 40-8.8-AA1J		
E	MAC136440	NUT – HEX FLG CTR LK M16 X 2-10-AA1J		
F	MAC30693	BOLT – HEX FLG HD SER 3/8-16 X .5 GR 5 - AA1J		
G	MAC136151	BOLT – HEX FLG HD TFL M10 X 1.5 X 16-8.8-AA1J		
H	MAC152655	BOLT – HEX FLG HD M10 X 1.5 X 20-8.8-AA1J		
J	MAC136151	BOLT – HEX FLG HD TFL M10 X 1.5 X 16-8.8-AA1J		
K	MAC18603	WASHER – FLAT SAE 1 1/16 ID X 2.0 IN OD AA1J		

366. The cinch strap is used to protect reel fore-aft hoses (MAC314397, MAC314399).

139 Hydraulics – Feed Deck

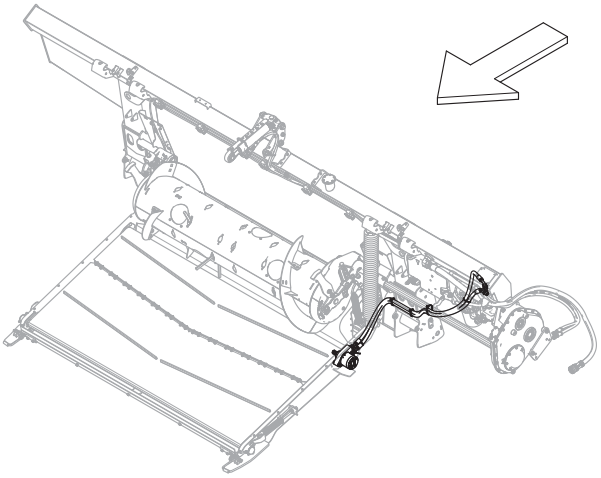

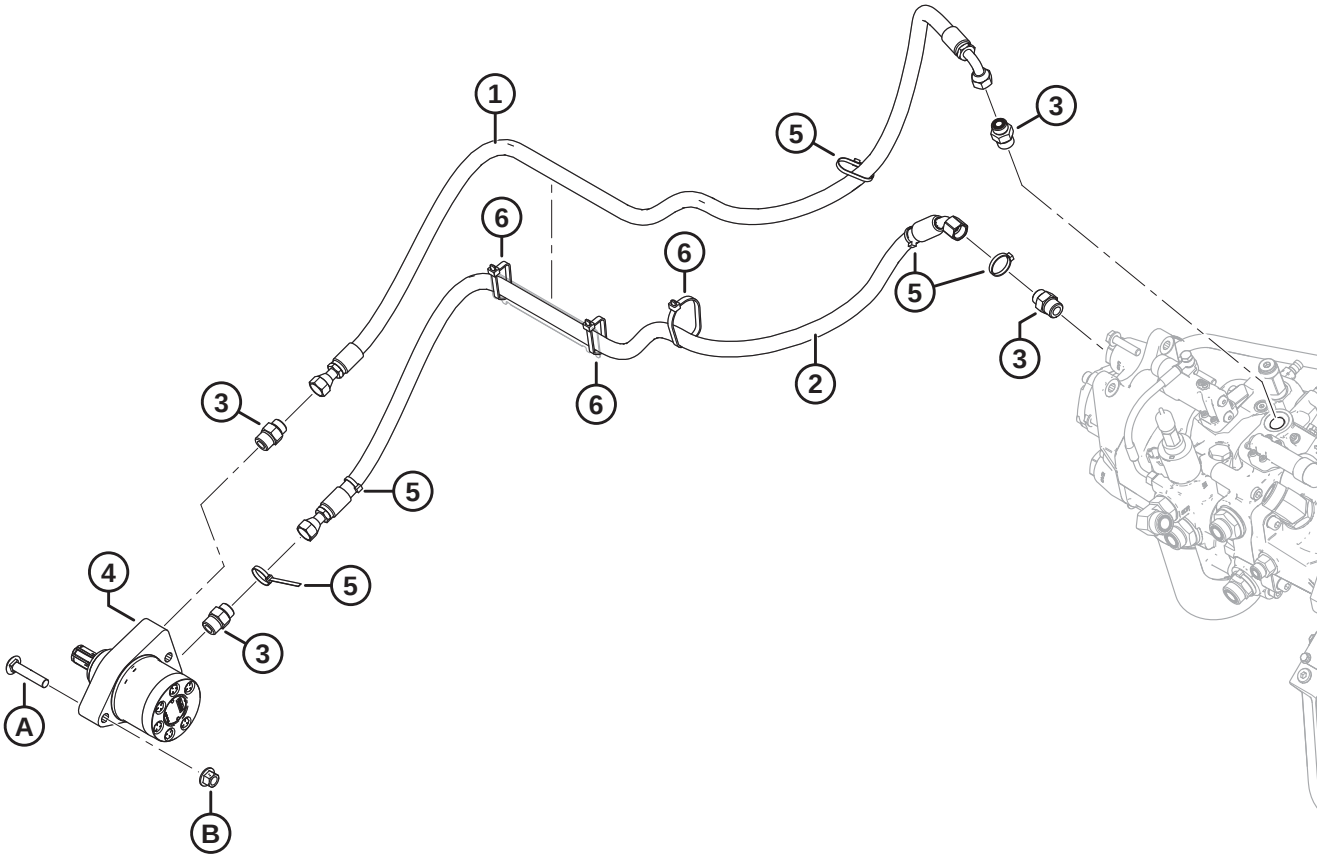

1032504

Ref	Part Number	Description	Qty	Serial Number
1	MAC314396	HOSE – HYD, FEED DRAPER RETURN	1	
2	MAC314395	HOSE – HYD, FEED DRAPER PRESSURE	1	
3	MAC184463	FITTING – ADAPTER HYD	4	
4	MAC295853	MOTOR – HYD (FEED DECK)	1	
	MAC245316	SEAL KIT		
5	MAC21763	FASTENER – CABLE TIE, BLACK 160 MM LG	5	
6	MAC30753	FASTENER – CABLE TIE, BLACK 305 MM LG	3	
A	MAC136308	BOLT – RHSSN M12 X 1.75 X 60-8.8-ZINC		
B	MAC136431	NUT – HEX FLG CTR LOC M12 X 1.75-10		

140 Hydraulics – Suction and Return

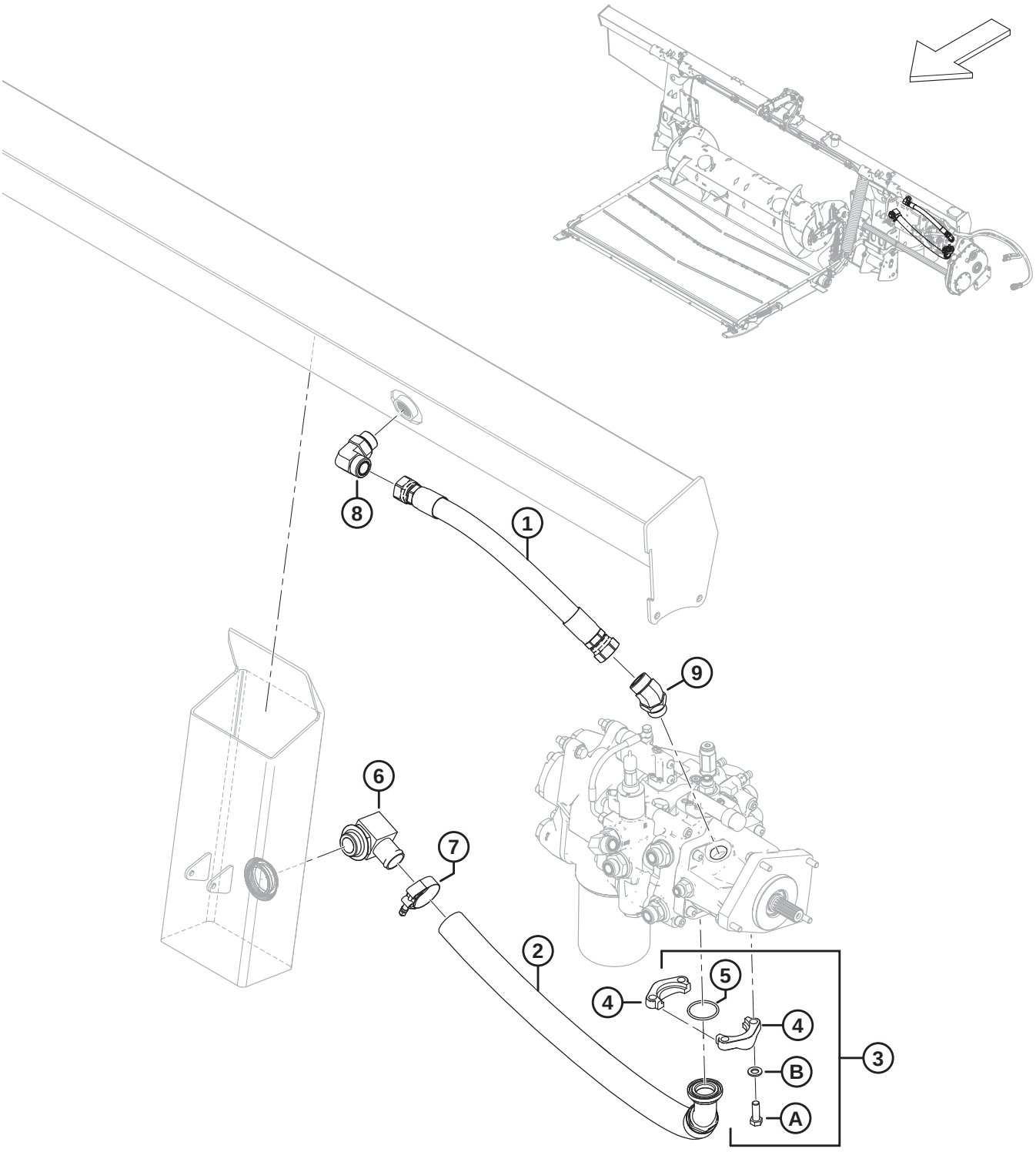

Ref	Part Number	Description	Qty	Serial Number
1	MAC314402	HOSE – HYD, RETURN	1	
2	MAC314389	HOSE – HYD, SUCTION	1	
3	MAC314537	KIT – SPLIT FLANGE, 1.5 IN. CD61-1 [367]	1	
4	MAC136106	FLANGE – HALF SPLIT 1.5 IN.	2	
5	MAC135400	O-RING – 3.53 X 47.22	1	
6	MAC111545	FITTING – ELBOW HYD HOSE ADAPTER	1	
7	MAC245753	CLAMP – T BOLT	1	
8	MAC135734	FITTING – ELBOW 90° HYD	1	
	MAC50220	O-RING – Ø2.95 X Ø29.74		
	MAC135554	O-RING – 1.78 X 23.52		
9	MAC252814	FITTING – ELBOW 45° HYD	1	
	MAC135554	O-RING – 1.78 X 23.52		
	MAC50220	O-RING – Ø2.95 X Ø29.74		
A	MAC152730	BOLT – HEX HD TFL M12 X 1.75 X 35-10.9-AA1J		
B	MAC184714	WASHER – FLAT REG M12-300HV		

367. The kit includes two 1.5 inch half split flange (MAC136106), O-ring (MAC135400), four bolts (MAC152730), and four washers (MAC184714).

141 Hydraulics – Float Module to Header Manifold

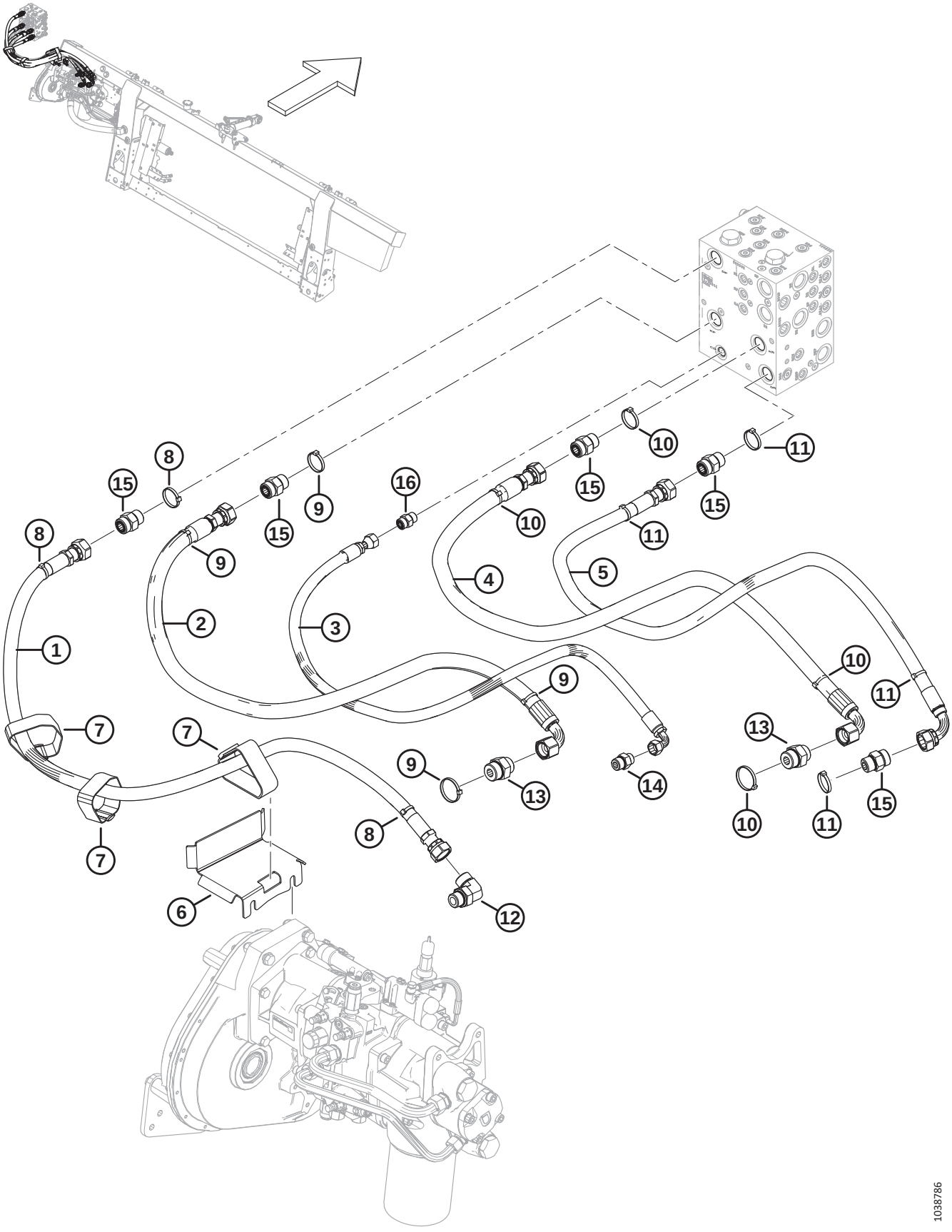

HYDRAULICS – FLOAT MODULE TO HEADER MANIFOLD

Ref	Part Number	Description	Qty	Serial Number
1	MAC322256	HOSE – HYD, SDP	1	
2	MAC314391	HOSE – HYD, KP	1	
3	MAC314401	HOSE – HYD, CD	1	
4	MAC314392	HOSE – HYD, KR	1	
5	MAC314394	HOSE – HYD, SDR	1	
6	MAC335887	HOLDER – HOSE	1	
7	MAC347969	CINCH STRAP – 16 IN. LG	3	
8	MAC49227	FASTENER – CABLE TIE, GREEN	3	
9	MAC40704	FASTENER – CABLE TIE, ORANGE	4	
10	MAC40703	FASTENER – CABLE TIE, BLUE	4	
11	MAC40702	FASTENER – CABLE TIE, RED	4	
12	MAC135821	FITTING – ELBOW 90° HYD	1	
	MAC30971	O-RING – Ø2.95 X Ø23.47		
	MAC135868	O-RING – Ø1.78 X Ø18.77		
13	MAC135789	FITTING – ADAPTER	2	
	MAC50220	O-RING – Ø2.95 X Ø29.74		
	MAC135868	O-RING – Ø1.78 X Ø18.77		
14	MAC184463	FITTING – ADAPTER HYD	1	
	MAC44210	O-RING – Ø2.46 X Ø19.18		
	MAC135866	O-RING – Ø1.78 X Ø12.42		
15	MAC135788	FITTING – ADAPTER	5	
	MAC30971	O-RING – Ø2.95 X Ø23.47		
	MAC135868	O-RING – Ø1.78 X Ø18.77		
16	MAC135780	FITTING – ADAPTER	1	
	MAC44209	O-RING – Ø2.21 X Ø16.36		
	MAC135866	O-RING – Ø1.78 X Ø12.42		

142 Electrical – Base

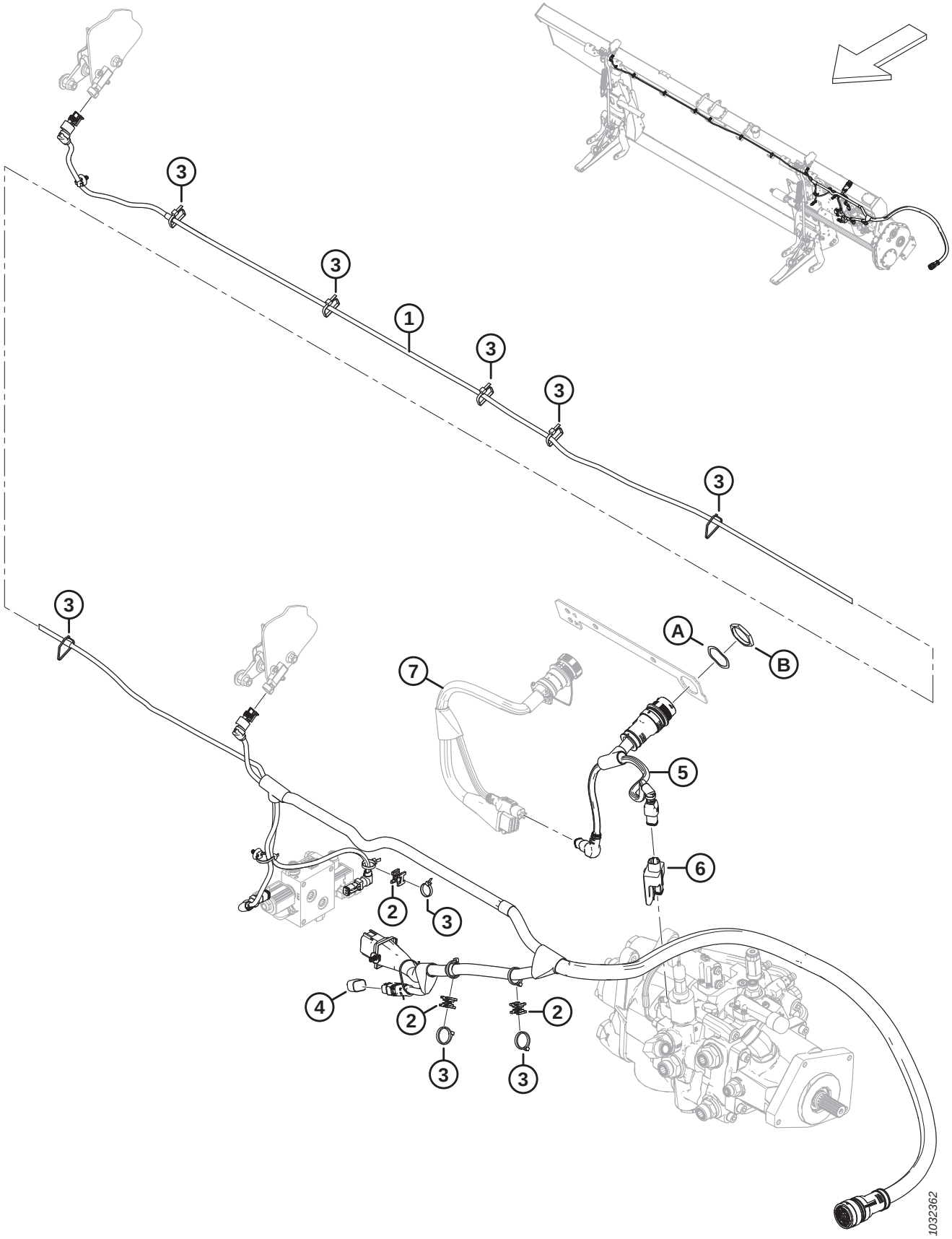

NOTE:

Kits (B-bundle numbers and C-collector numbers) can be purchased from MacDon Whole Goods only.

Ref	Part Number	Description	Qty	Serial Number
	B7196	KIT – LATERAL TILT PLUG [368]		
1	MAC328089	HARNESS – MAIN [369]	1	
	MAC136655	FASTENER – FIR TREE MT W/ TIE		
2	MAC134442	SPACER – DUAL SWIVEL SADDLE	3	
3	MAC21763	FASTENER – CABLE TIE, BLACK	A/R	
4	MAC328560	PLUG – FLOAT CONFIG. 1 SENSOR	1	
	MAC328318	PLUG – FLOAT CONFIG. 2 SENSOR	OPT	
5	MAC322383	HARNESS – FM200 ADAPTER	1	
6	MAC328411	MODULE – VALVE DRIVER	1	
7	REF	HARNESS – COMPLETION PACKAGE [370]		
A	MAC134730	WASHER – LOCK, HDP 20, SIZE 24		
B	MAC134728	NUT – PANEL, HDP 20, SIZE 24		

368. The kit includes two-sensor plug (MAC328318) and instructions. Kits are available through Whole Goods only.
369. The harness comes complete with all fir tree fasteners (MAC136655) attached.
370. The harness varies depending on the combine model and the electrical completion package required. For harness part numbers, refer to the electrical completion section for your specific combine.

143 Electrical – FM200 to Combine Cab

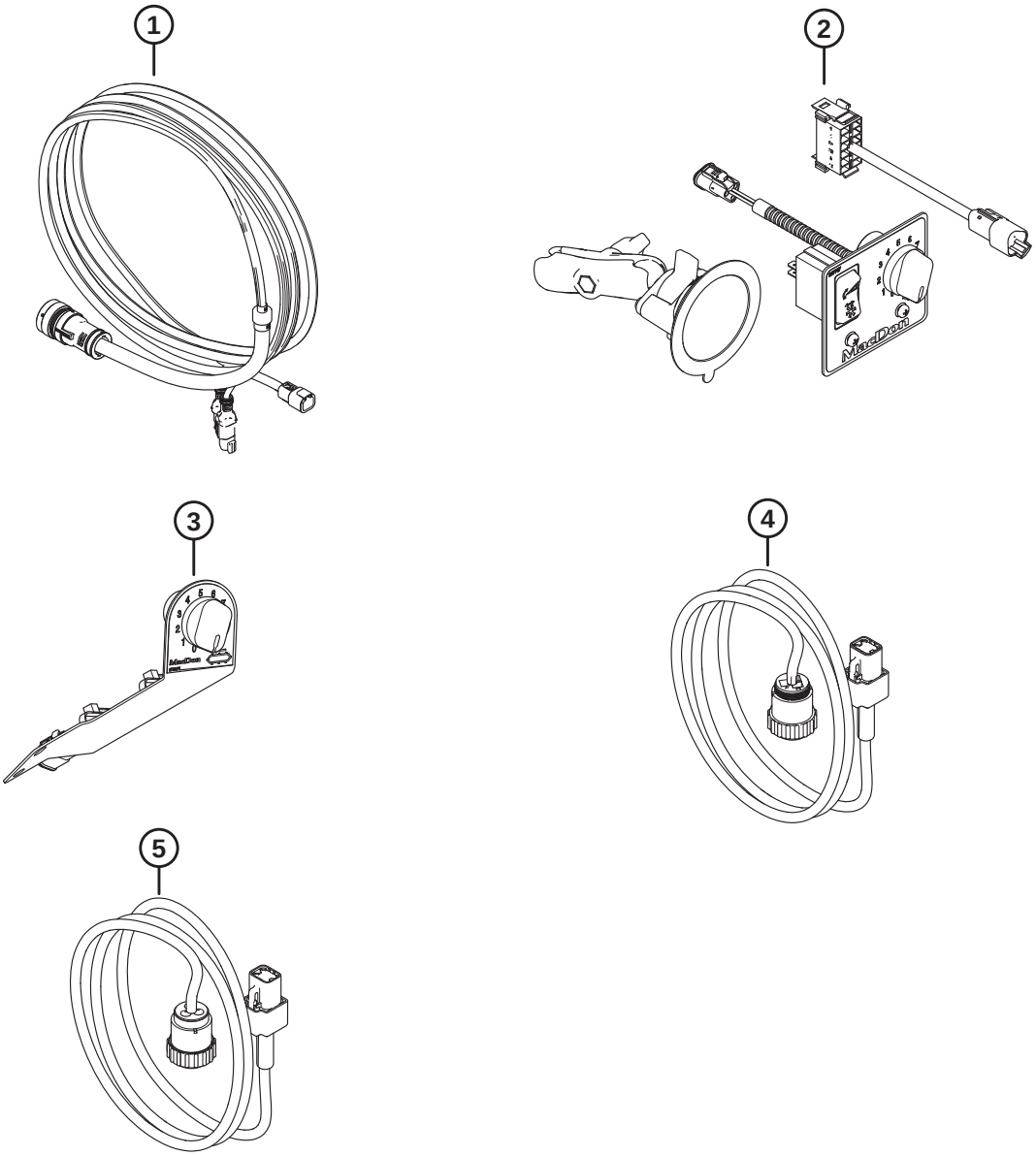

1039723

Ref	Part Number	Description	Qty	Serial Number
1	328549	KIT – CAB CONTROL [371]		
2	328550	KIT – TILT AND SIDE DRAPER CONTROL [372]		
	314076	HARNESS – EXT. CAB ROCKER SW		
	287859	BASE – SUCTION CUP WITH ARM		
	NSS	CONTROL PANEL – ICSDSC, GENERIC [373]		
3	328551	KIT – SIDE DRAPER CONTROL, CNH [374]		
	276671	CONTROL PANEL, ICSDSC,CNH		
	213459	POTENTIOMETER – 5K		
	109773	KNOB – PLASTIC		
	21763	FASTENER – CABLE TIE, BLACK		
4	328552	KIT – CAB POWER CPC NA (CNH) [375]		
	308684	HARNESS – EXT. CAB PWR CPC		
5	335287	KIT – CAB PWR CPC EU [376]		
	328561	HARNESS – EXT. CAB PWR CPC EU		
	337617	BAG ASSY – CBN CONTROL CNH NA [377]		
	337618	BAG ASSY – CBN CONTROL CNH EU [378]		

371. The kit includes combine cab control harness (NSS) and instructions.
372. The kit includes exterior cab rocker switch (MAC314076), base suction cup with arm (MAC287859), control panel (NSS), and instructions.
373. The control panel (NSS) includes Generic panel (MAC287944), rocker switch (MAC287797), ball mount base (MAC287749), two screws (MAC135161), and two nuts (MAC20012).
374. The kit includes control panel (MAC276671) and instructions.
375. The kit includes exterior cab power harness (MAC308684) and instructions.
376. The kit includes exterior cab power harness (MAC328561) and instructions.
377. The bag assembly includes Cab Control kit (MAC328549), CNH Tilt and Side Draper Control kit (MAC328551), Cab Power kit (MAC328552), and cable tie mounts (MAC305330).
378. The bag assembly includes Cab Control kit (MAC328549), CNH Tilt and Side Draper Control kit (MAC328551), Cab Power kit (MAC335287), cable ties (MAC21763, MAC30753), and cable tie mounts (MAC305330).

144 Decals and Reflectors – FM200

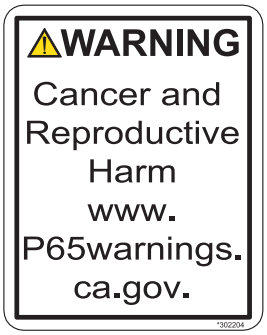

1

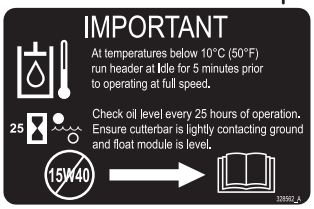

2

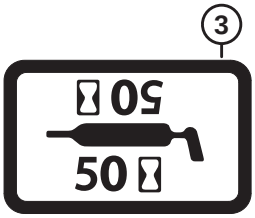

3

4

This product may be covered by one or more of the following patents:

CDN. # 1075914	U.S. # 35543
CDN. # 1226739	U.S. # 4346909
CDN. # 1240158	U.S. # 4573309
CDN. # 1244248	U.S. # 4660361
CDN. # 1267292	U.S. # 4662161
CDN. # 1322104	U.S. # 4909026
AUSTRALIA # 615149	U.S. # 5086613
AUSTRALIA # 617821	U.S. # 5157905
KAZAKHSTAN # 4372	U.S. # 5243810
RUSSIA # 1828389	U.S. # 5261290
UKRAINE # 3440	U.S. # 5435239
ITALY # 0717922	U.S. # 5459986
FRANCE # 0717922	U.S. # 5473872
GERMANY # 0717922	U.S. # 5678398
U.K. # 0717922	U.S. # 5791128
	U.S. # 5927606
	U.S. # 5970695
	U.S. # 5992759
	U.S. # 6029429

Other patents pending.

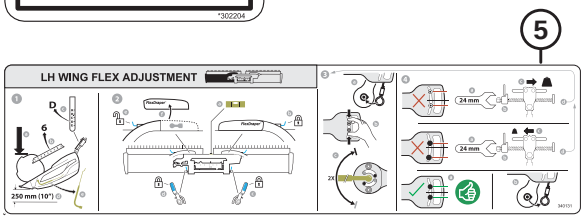

5

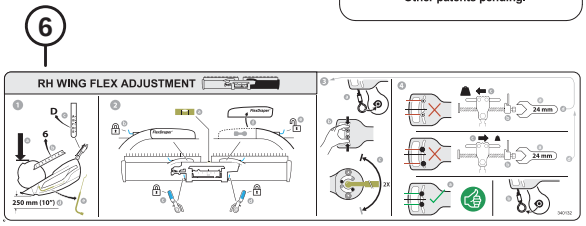

6

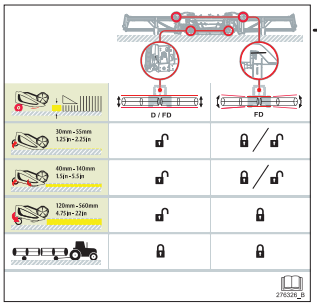

7



8

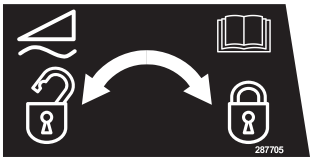

9



10



11

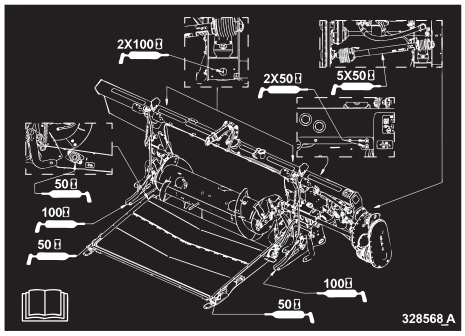

12

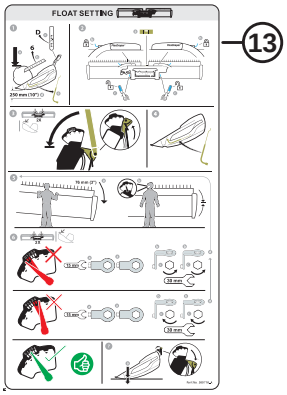

13

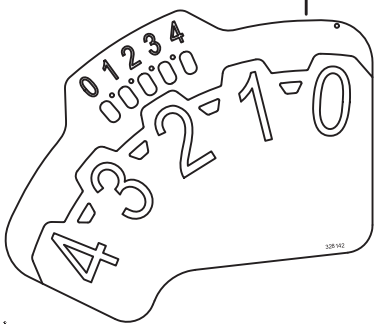

14



15

16

17

1039342

DECALS AND REFLECTORS – FM200

Ref	Part Number	Description	Qty	Serial Number
1	MAC302204	DECAL – CA PROPOSITION 65		
2	MAC328562	DECAL – OIL, IMPORTANT		
3	MAC23165	DECAL – 50 HR LUBE		
	MAC23163	DECAL – 10 HR LUBE		
4	MAC32070	DECAL – PATENT NUMBER		
5	MAC340131	DECAL – LH FLEX SETTING		
6	MAC340132	DECAL – RH FLEX SETTING		
7	MAC276326	DECAL – HEADER ADJUSTMENT		
8	MAC287702	DECAL – FLOAT LOCK, LH		
9	MAC287705	DECAL – FLOAT LOCK, RH		
10	MAC328565	DECAL – OIL DRAIN		
11	MAC313728	DECAL – READ MANUAL/FLUID SPRAY		
12	MAC347342	DECAL – GREASE FM200		
13	MAC360716	DECAL – FLOAT SETTING		
14	MAC328142	DECAL – FSM		
15	MAC360655	DECAL – SAFETY RETURN WRENCH		
16	MAC174131	STRIP – ANTI SLIP, 250 MM LG		
	MAC132117	STRIP – ANTI SLIP, 450 MM LG		
	MAC140225	STRIP – ANTI SLIP, 550 MM LG		
17	MAC115146	REFLECTOR – AMBER		

145 New Holland CR Wide – Float Module Completion

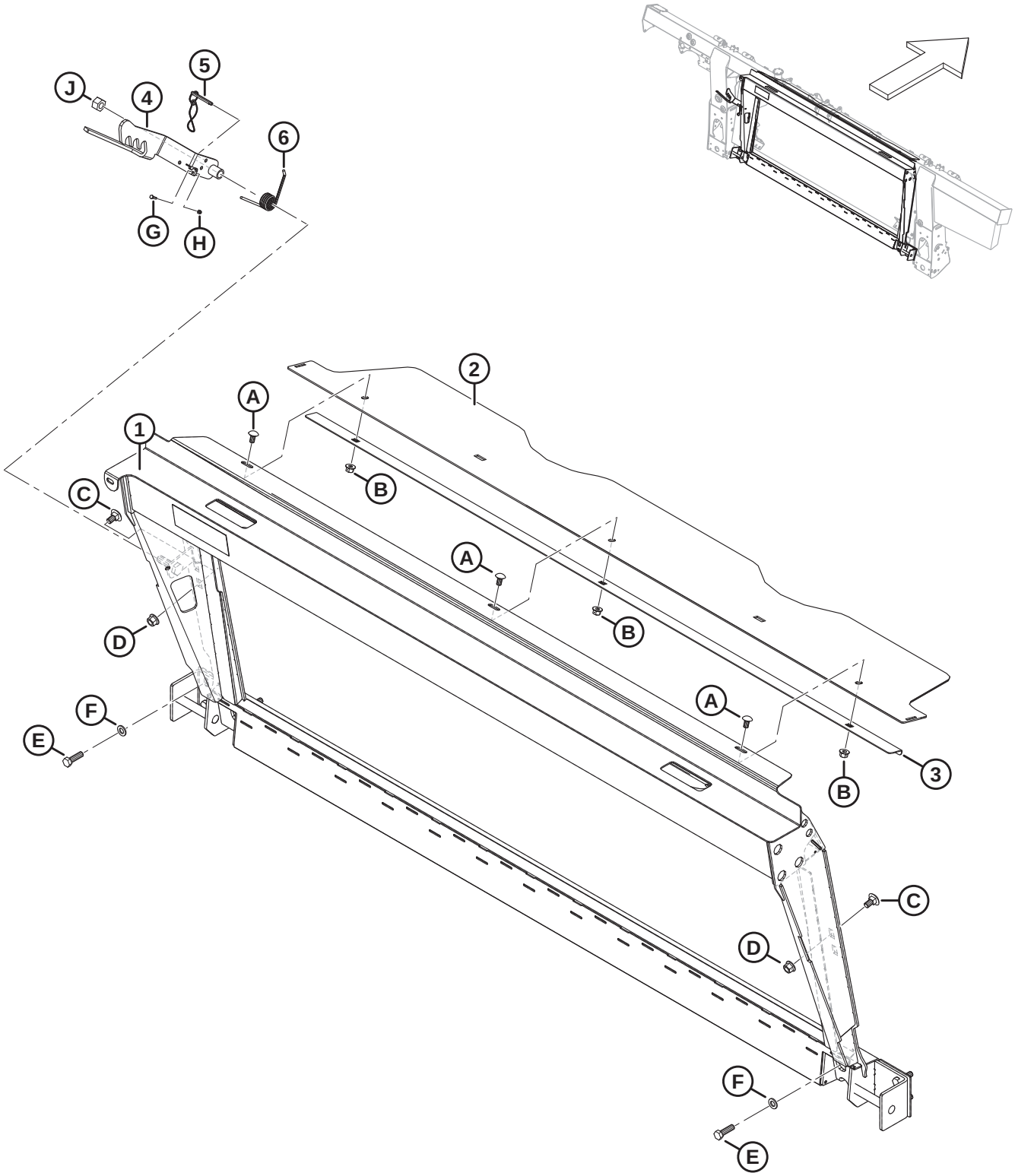

1034928

NOTE:

Kits (B-bundle numbers and C-collector numbers) can be purchased from MacDon Whole Goods only.

Ref	Part Number	Description	Qty	Serial Number
	B7043	KIT – CNH TRANSITION FRAME [379]		
1	MAC347300	ASSY – CNH TRANSITION W/ DECAL	1	
2	MAC357195	COVER – FEED AUGER TOP	1	
3	MAC301629	RETAINER – DUST COVER	1	
4	MAC347141	LATCH – WELDT	1	
5	MAC237363	PIN – DETENT WITH 8 IN. LANYARD	1	
6	MAC156948	SPRING – TORSION	1	
A	MAC184657	BOLT – RHSSN M10 X 1.5 X 20-8.8-AA1J		
B	MAC135799	NUT – HEX FLG CTR LOC M10 X 1.5-10		
C	MAC135903	BOLT – RHSN M12 X 1.75 X 25-8.8-ZINC		
D	MAC136431	NUT – HEX FLG CTR LOC M12 X 1.75-10		
E	MAC184669	BOLT – HEX HD M12 X 1.75 X 40-8.8-AA1J		
F	MAC184714	WASHER – FLAT REG M12-300HV		
G	MAC197319	BOLT – HEX HD TFL M4 X 0.7 X 16-8.8-AA1J		
H	MAC197320	NUT – HEX NYLOC M4 X 0.7-8-AA1J		
J	MAC136476	NUT – HEX CTR LOC M16 X 2-8		

379. Kits are available through Whole Goods only.

146 New Holland CR Wide – Hydraulic/Electrical Completion

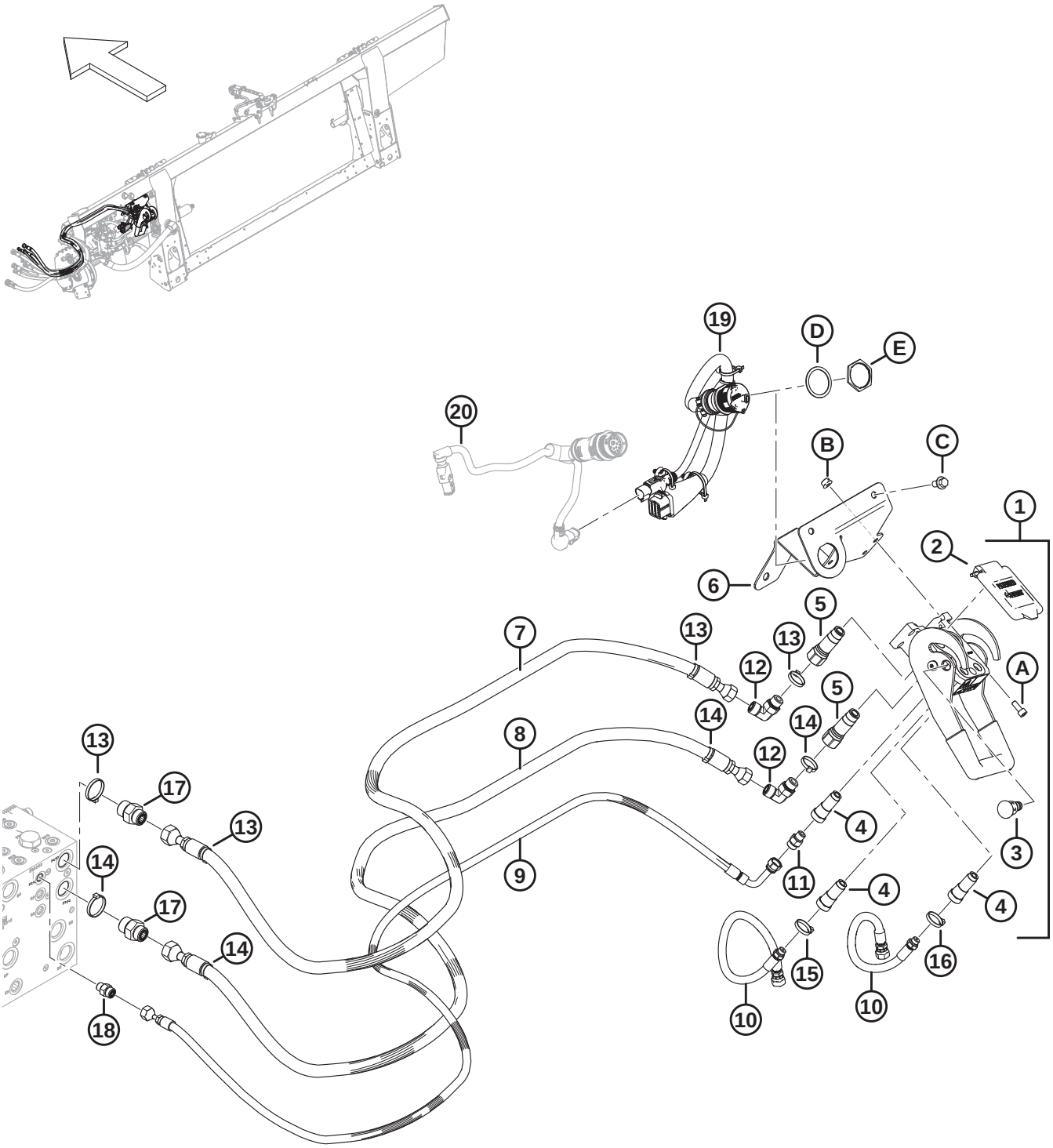

1032787

NOTE:

Kits (B-bundle numbers and C-collector numbers) can be purchased from MacDon Whole Goods only.

Ref	Part Number	Description	Qty	Serial Number
	B7056	KIT – CNH HYD ELEC COMPLETION [380]		
1	MAC153151	COUPLING – MULTI [381]	1	
2	MAC129800	KIT – COVER CNH MULTI-COUPLER	1	
3	MAC129801	KIT – LATCH BUTTON	1	
4	MAC129976	COUPLING 1/4 IN.	3	
5	MAC129977	COUPLING 3/8 IN.	2	
6	MAC328874	SUPPORT WELDT – CNH MULTI COUPLER	1	
7	MAC314586	HOSE – HYD, REEL DRIVE PRESSURE CNH	1	
8	MAC314587	HOSE – HYD, REEL DRIVE RETURN CNH	1	
9	MAC314588	HOSE – HYD, REEL LIFT, CNH	1	
10	MAC314585	HOSE – HYD, REEL F-A, CNH	2	
11	MAC252694	FITTING – ADAPTER .052 ORIFICE	1	
12	MAC136220	FITTING – ELBOW 90° HYD	2	
	MAC44209	O-RING – Ø2.21 X Ø16.36		
	MAC135866	O-RING – Ø1.78 X Ø12.42		
13	MAC49232	FASTENER – CABLE TIE, WHITE	4	
14	MAC40701	FASTENER – CABLE TIE, YELLOW	4	
15	MAC40702	FASTENER – CABLE TIE, RED	2	
16	MAC49227	FASTENER – CABLE TIE, GREEN	2	
17	MAC135786	FITTING – ADAPTER	2	
	MAC50219	O-RING – Ø1.98 X Ø11.89		
	MAC135865	O-RING – Ø1.78 X Ø9.25		
18	MAC135778	FITTING – ADAPTER	1	
	MAC50219	O-RING – Ø1.98 X Ø11.89		
	MAC135865	O-RING – Ø1.78 X Ø9.25		
19	MAC322384	HARNESS – COMP., CNH	1	

380. Kits are available through Whole Goods only.

381. The multicoupler includes CNH multi-coupler cover kit (MACMAC129800), latch button kit (MAC129801), three 1/4 inch couplings (MAC129976), and two 3/8 inch coupling (MAC129977).

NEW HOLLAND CR WIDE – HYDRAULIC/ELECTRICAL COMPLETION

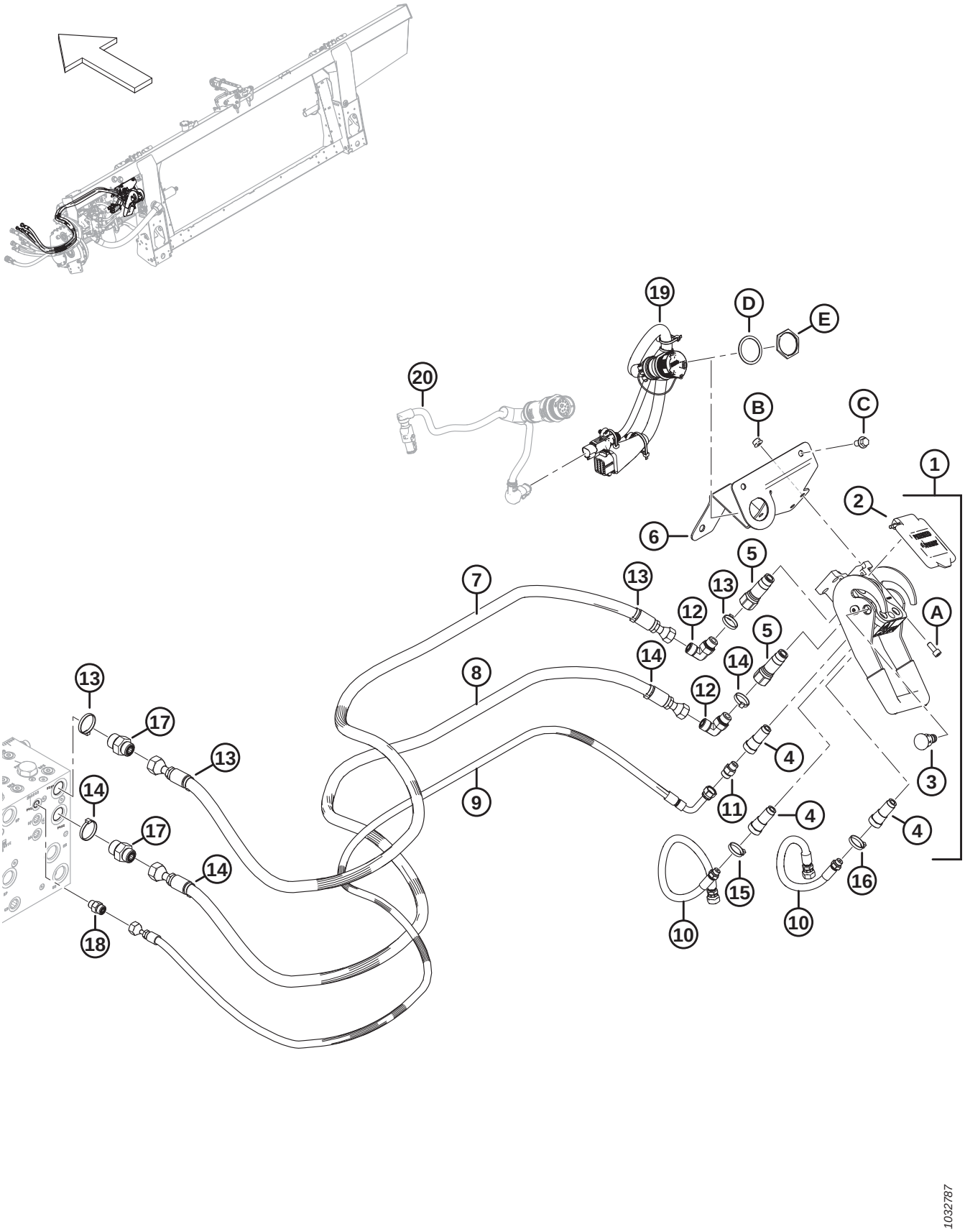

Ref	Part Number	Description	Qty	Serial Number
20	REF	HARNESS – CAB ADAPTER [382]	1	
A	MAC167307	SCREW – HEX SOC HD M8 X 1.25 X 20-8.8-AA1J		
B	MAC135337	NUT – HEX FLG CTR LK M8 X 1.25-8-AA1J		
C	MAC136151	BOLT – HEX FLG HD TFL M10 X 1.5 X 16-8.8-AA1J		
D	MAC134011	WASHER – LOCK SPRING, DEUTSCH HD, SIZE 24	1	
E	MAC134010	NUT – PANEL, HD 30, SIZE 24	1	

382. For the harness, refer to Section *142 Electrical – Base, page 401*.

147 New Holland 10 Volt Auto Header Height Control Adapter Kit

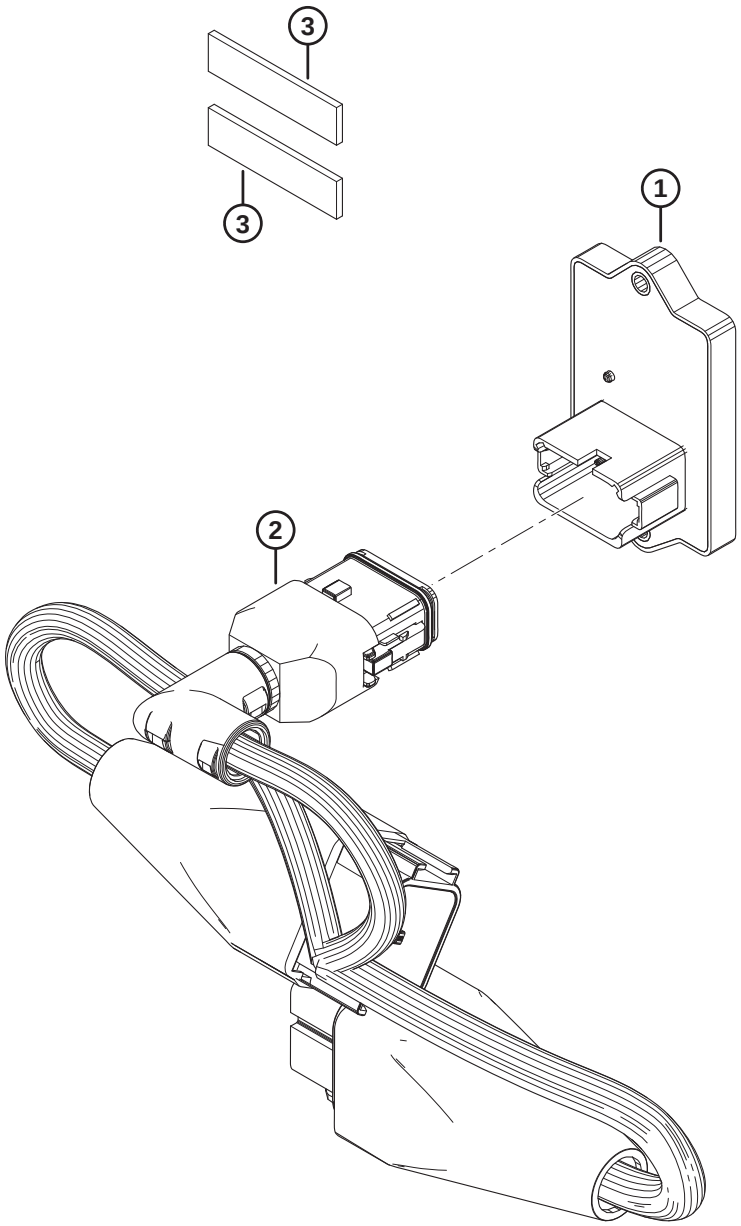

1039669

NEW HOLLAND 10 VOLT AUTO HEADER HEIGHT CONTROL ADAPTER KIT

NOTE:

Kits (B-bundle numbers and C-collector numbers) can be purchased from MacDon Whole Goods only.

Ref	Part Number	Description	Qty	Serial Number
	B7241	KIT – NH 10V ADAPTER [383]		
	MAC335161	KIT – NH 10V ADAPTER [384]		
1	MAC500448	MODULE – NH 10V	1	
2	MAC335160	HARNESS – NH 10V ADAPTER	1	
3	NSS	TAPE – FOAM, VHB, 1/2 IN. WIDE, 50 MM	2	

383. Kits are available through Whole Goods only.
384. The kit includes all listed parts and instructions.

148 (Option) Extended Center Filler

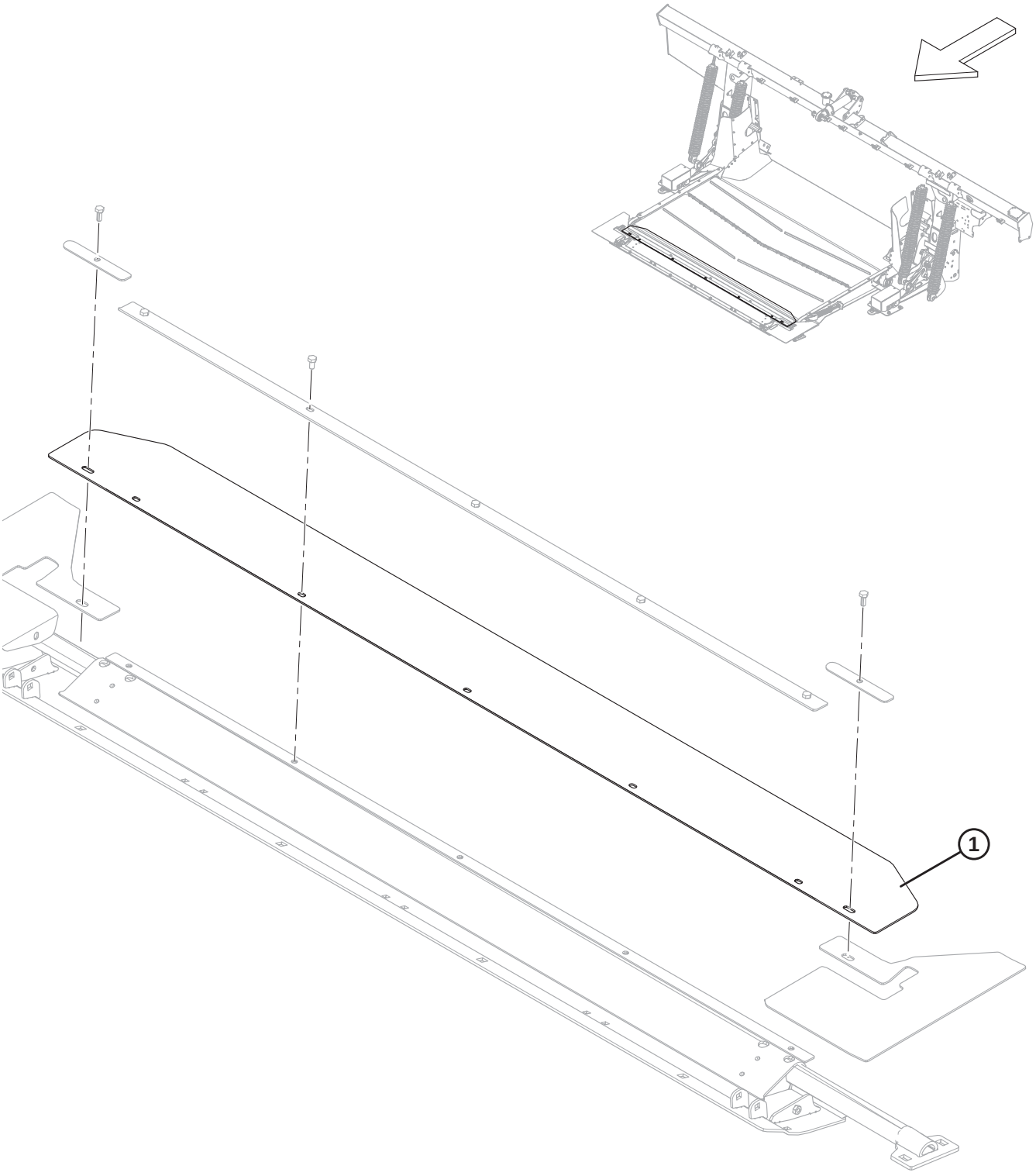

(OPTION) EXTENDED CENTER FILLER

NOTE:

Kits (B-bundle numbers and C-collector numbers) can be purchased from MacDon Whole Goods only.

Ref	Part Number	Description	Qty	Serial Number
	B6450	KIT – EXTENDED CENTER FILLER[385]		
1	MAC295542	FILLER – PAN CENTER EXTENDED	1	

385. Kits are available through Whole Goods only.

149 (Option) FM200 Fillers and Links

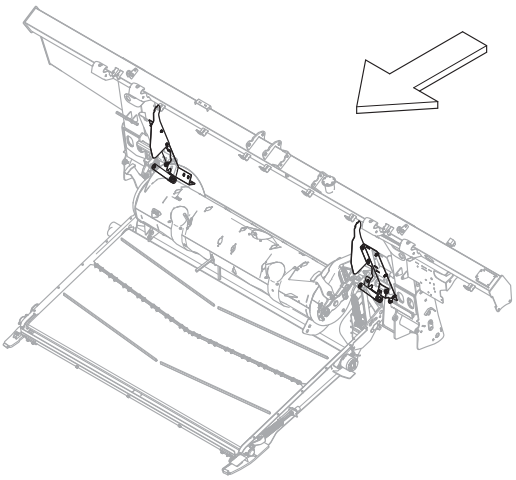

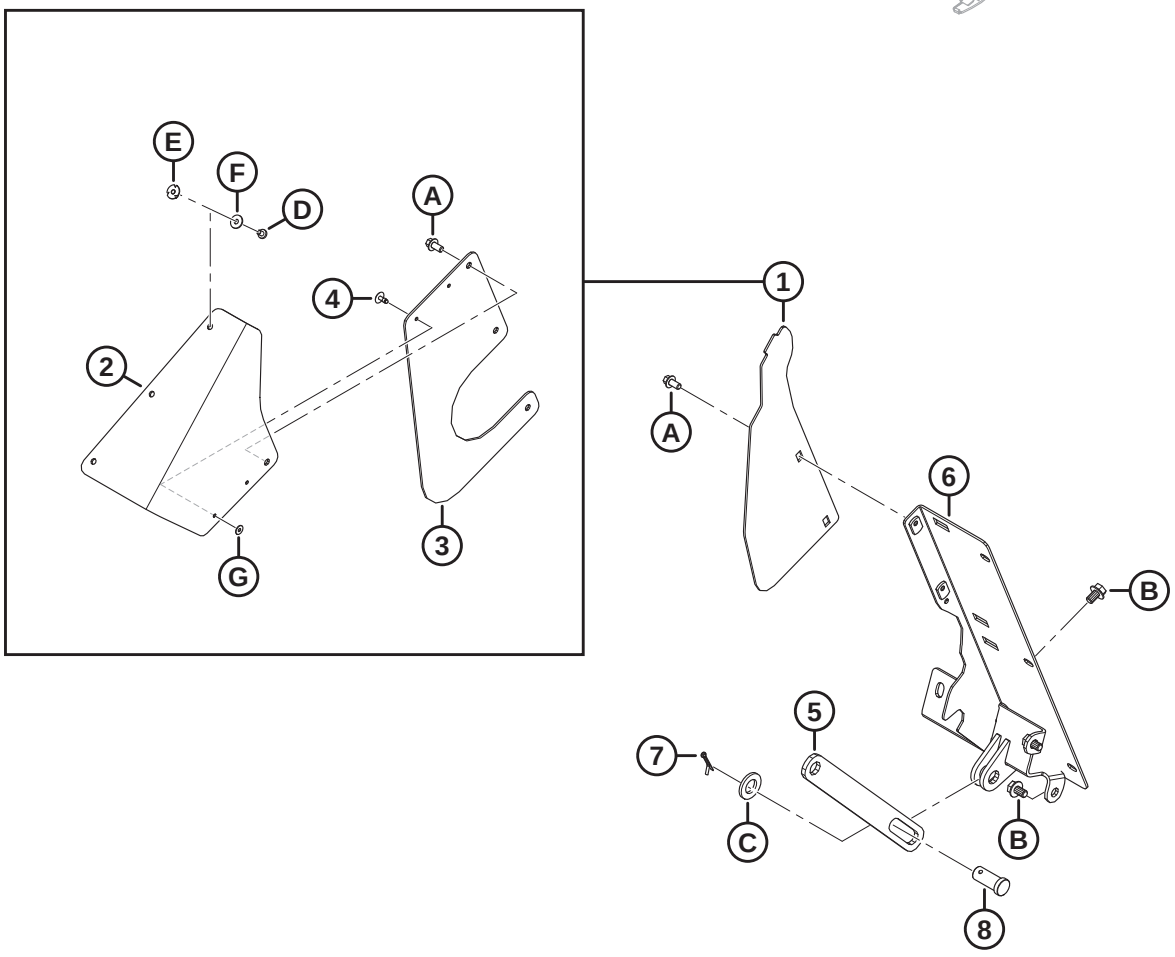

1039547

(OPTION) FM200 FILLERS AND LINKS

NOTE:

Kits (B-bundle numbers and C-collector numbers) can be purchased from MacDon Whole Goods only.

Ref	Part Number	Description	Qty	Serial Number
	B7342	KIT – FM200 ADAPTER FILLERS AND LINKS[386]		
1	MAC357512	KIT – DUST COVER SIDES [387]	A/R	
2	MAC357174	FLAP – DUST COVER FILLER	2	
3	MAC357173	COVER – FEED AUGER SIDE	2	
4	MAC293053	RIVET – POP	4	
5	MAC322914	BAR – AUGER SUPPORT LIMITER	1	
6	NSS	FILLER – WELDMENT LH	1	
	NSS	FILLER – WELDMENT RH	1	
7	MAC18648	PIN – COTTER 3/16 DIA X 1.25 ZP	2	
8	MAC11814	PIN – CLEVIS, 23.8 MM, 30 MM ZN PL	2	
A	MAC136485	BOLT – HEX FLG HD TFL M8 X 1.25 X 16-8.8-AA1J		
B	MAC136151	BOLT – HEX FLG HD TFL M10 X 1.5 X 16-8.8-AA1J		
C	MAC112130	WASHER – HARD ASTM F4363/4 IN. NOM. ID AB0C		
D	MAC252291	SCREW – PAN HD M6 X 1 X 8-8.8-AA1J		
E	MAC252051	NUT – TEE M6		
F	MAC184706	WASHER – FLAT LARGE M6-200HV		
G	MAC293054	WASHER – FLAT LARGE M5-200HV-AA1J [388]		

386. Kits are available through Whole Goods only.
387. This kit is used to service units with superseded side covers (MAC347558). The kit includes two dust cover filler flaps (MAC357174), two feed auger side covers (MAC357173), four pop rivets (MAC293053), and hardware.
388. Washer (MAC293054) is not included in the kit, order this washer separately.

150 (Option) Hillside Extension

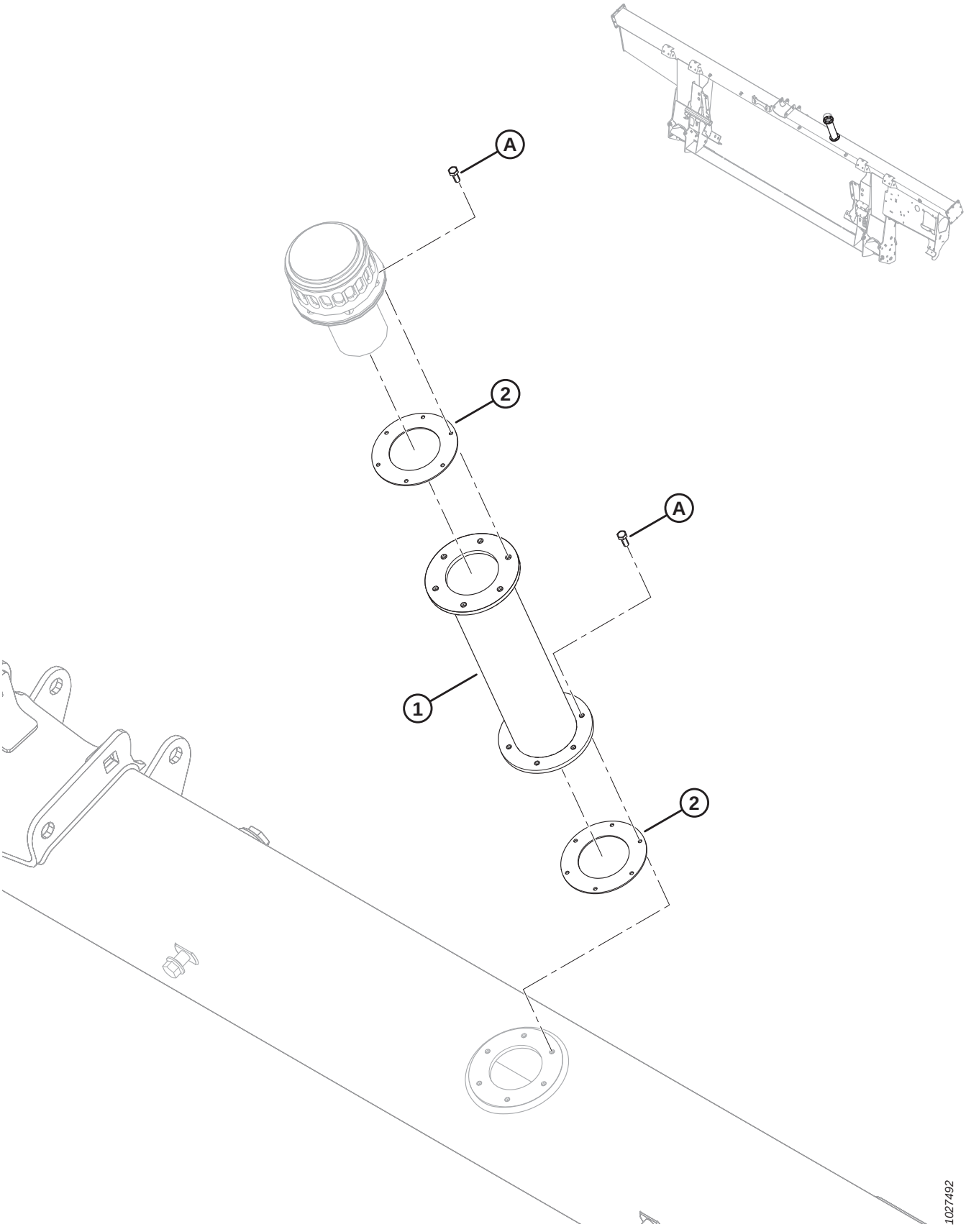

(OPTION) HILLSIDE EXTENSION

NOTE:

Kits (B-bundle numbers and C-collector numbers) can be purchased from MacDon Whole Goods only.

Ref	Part Number	Description	Qty	Serial Number
	B6057	KIT – HYDRAULIC RESERVOIR FILL EXTENSION [389]		
	MAC312824	KIT – HYDRAULIC RESERVOIR FILL EXTENSION [390]		
1	NSS	HYD RESERVOIR FILL EXTENSION	1	
2	NSS	GASKET	2	
	MAC166450	DECAL – WARNING, HOT SURFACE	2	
A	MAC320397	SCREW – HEX HD TFL M5 X 0.8 X 12-8.8-PLAIN (2022 AND LATER) [391]		421190–
	MAC135873	SCREW – MACH #10-32 X 0.5 IN. HEX (2021 AND PRIOR) [391]		–421189

389. The kit includes hydraulic reservoir fill extension (NSS), two gaskets (not sold separately), two decals (MAC166450), and six screws (MAC320397). Kits are available through Whole Goods only.
390. The kit includes hydraulic reservoir fill extension (not sold separately), two gaskets (NSS), two decals (MAC166450), six screws (MAC320397), and instructions.
391. On model year 2021 and prior units, use imperial screw (MAC135873) to prevent cross threading a metric bolt into an imperial threaded hole.

151 (Option) Stripper Bars

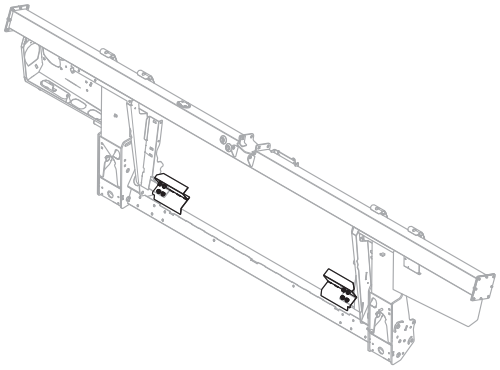

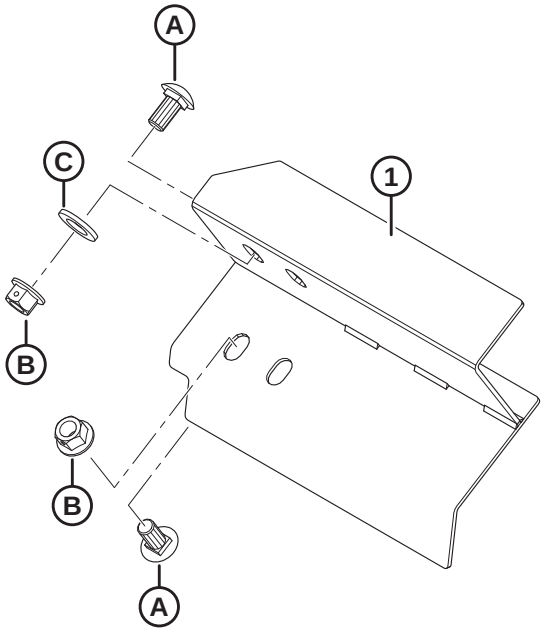

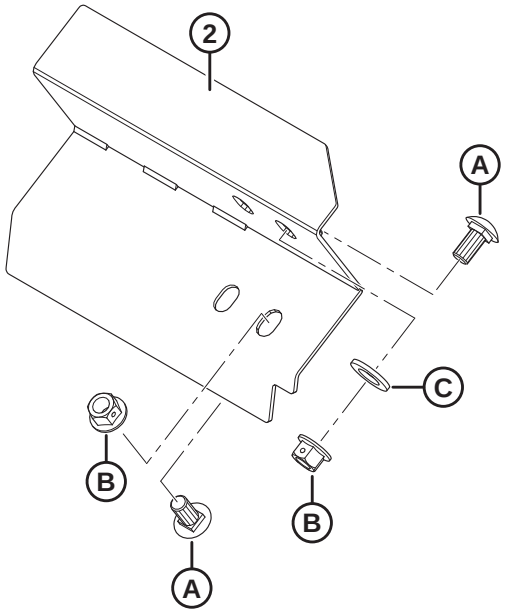

1023852

(OPTION) STRIPPER BARS

NOTE:

Kits (B-bundle numbers and C-collector numbers) can be purchased from MacDon Whole Goods only.

Ref	Part Number	Description	Qty	Serial Number
	B6042	KIT – STRIPPER BARS, 265 MM LG (WITHOUT CUTOUT) [392]		
	B6044	KIT – STRIPPER BARS, 325 MM LG [392]		
	B6045	KIT – STRIPPER BARS, 365 MM LG [392]		
	B6046	KIT – STRIPPER BARS, 403 MM LG [392]		
	B6213	KIT – STRIPPER BARS, 515 MM LG [392]		
1	MAC213523	STRIPPER – WELDMENT, LEFT (265 MM LG W/O CUTOUT)	1	
	MAC213573	STRIPPER – WELDMENT, LEFT (325 MM LG)	1	
	MAC213567	STRIPPER – WELDMENT, LEFT (365 MM LG)	1	
	MAC213561	STRIPPER – WELDMENT, LEFT (403 MM LG)	1	
	MAC213579	STRIPPER – WELDMENT, LEFT (515 MM LG)	1	
2	MAC213525	STRIPPER – WELDMENT, RIGHT (265 MM LG W/O CUTOUT)	1	
	MAC213574	STRIPPER – WELDMENT, RIGHT (325 MM LG)	1	
	MAC213568	STRIPPER – WELDMENT, RIGHT (365 MM LG)	1	
	MAC213562	STRIPPER – WELDMENT, RIGHT (403 MM LG)	1	
	MAC213580	STRIPPER – WELDMENT, RIGHT (515 MM LG)	1	
A	MAC135903	BOLT – RHSN M12 X 1.75 X 25-8.8-A3L		
B	MAC136431	NUT – HEX FLG CTR LOC M12 X 1.75-10-A3L		
C	MAC184717	WASHER – FLAT REG M16-200HV-AA1J		

392. Kits are available through Whole Goods only.

Index

NOTE:

Add the prefix MAC to part numbers when ordering
Example: MAC123456.

795 354
1709 374
4761 72
5512 336
6647 336
7642 ..... 210, 348
9213 354
9333 354
11695 72
11814 ..... 358, 418
13125 ..... 2, 6, 244
13617 384
16235 96
16266 10
16681 ..... 90, 92, 94
17006 326
18598 356
18601 ..... 144, 148, 320, 358, 372
18603 ..... 72, 394
18605 96
18606 ..... 72, 300, 304
18607 ..... 90, 92, 94, 96, 100, 104, 108, 236, 336
18608 ..... 234, 240, 280, 372, 374
18609 ..... 234, 282, 372, 392
18619 244
18621 ..... 80, 90, 92, 94
18624 286
18626 ..... 84, 86
18629 ..... 84, 86
18637 ..... 22, 24, 28, 30
18638 ..... 352, 356
18648 ..... 80, 84, 86, 236, 246, 280, 358, 418
18671 ..... 96, 234, 244, 280, 368, 370
18704 ..... 90, 92, 94
18768 ..... 300, 304
18798 ..... 238, 322
18867 ..... 22, 24, 28, 30
18898 376
18916 ..... 238, 282
19542 246
19958 96
20312 370
21010 384
21032 234
21061 326
21194 72
21235 ..... 350, 354
21301 ..... 98, 102, 108
21363 324
21540 374
21572 288
21763 ..... 6, 138, 206, 208, 234, 300, 304, 326, 394, 396, 402, 404
21859 ..... 298, 302
23163 406
23164 216
23165 406
26429 246
30144 80
30228 284
30316 ..... 340, 344
30441 ..... 32, 36
30463 374
30505 ..... 34, 36, 356, 358
30520 ..... 96, 236, 280
30627 ..... 300, 306, 344, 372
30628 ..... 16, 136, 210, 388
30629 82
30630 ..... 100, 104, 108
30631 314
30632 ..... 300, 306, 334
30655 ..... 100, 104
30660 ..... 162, 166, 170, 174, 182, 186, 314
30661 ..... 298, 302
30693 394
30701 336
30702 336
30715 ..... 238, 242, 252, 378
30716 ..... 290, 294
30753 ..... 160, 170, 172, 182, 186, 318, 368, 396
30934 ..... 298, 304
30971 ..... 138, 140, 144, 146, 150, 158, 188, 192, 198, 322, 326, 400
31465 356
31774 ..... 100, 104, 108, 372
32070 ..... 216, 406
36651 ..... 340, 344
39272 240
40095 340
40701 ..... 138, 410
40702 ..... 138, 326, 394, 400, 410
40703 ..... 138, 326, 392, 400
40704 ..... 138, 326, 392, 400
42292 242
42592 34
44209 ..... 138, 140, 144, 146, 318, 400, 410
44210 ..... 142, 146, 150, 154, 188, 192, 296, 302, 326, 400
45427 394
49227 ..... 138, 394, 400, 410

49232 ..... 138, 410
49306 ..... 298, 302
49378 246
49904 370
50071 210
50083 350
50139 376
50140 314
50154 352
50155 ..... 104, 352, 356
50193 ..... 10, 136
50219 ..... 80, 84, 86, 138, 140, 154, 158, 160, 164, 168, 176, 180, 184, 392, 410
50220 ..... 140, 326, 398, 400
50223 ..... 142, 146, 296, 302
100500 ..... 60, 66, 70, 370
100577 140
100709 76
100710 76
100712 76
100714 76
100715 76
100717 76
100718 76
100719 76
100720 76
100721 76
100722 76
100723 76
100726 76
100862 384
101007 ..... 236, 280
101095 286
101897 ..... 22, 24, 28, 30
102264 ..... 244, 286, 394
102629 76
102630 76
102711 140
103575 140
103879 96
108172 ..... 284, 300, 304
109613 214
109773 404
111521 ..... 98, 104
111528 376
111545 398
112130 ..... 40, 42, 358, 418
112640 178
112823 ..... 188, 192
113152 76
113153 78
113222 ..... 60, 66, 70, 370
113229 72
113561 242
113566 240
113937 ..... 60, 66, 70
115146 ..... 216, 406
115670 ..... 60, 66, 70
115759 216
118011 384
118185 384
118239 242
119529 ..... 290, 294
119558 ..... 290, 292
119560 290
119565 290
119593 286
119623 288
119641 288
119653 ..... 290, 292
119654 ..... 290, 292
119655 290
119656 290
119666 286
119667 286
119672 288
119691 ..... 286, 292
119692 292
119693 292
119694 292
119696 286
119697 288
119705 286
119706 286
119725 286
119726 ..... 290, 294
119737 294
119738 286
119757 286
119766 290
120845 ..... 32, 36
120901 72
123180 ..... 348, 362
123318 328
123406 356
123978 392
129313 216
129800 410
129801 410
129976 410
129977 410
130283 382
132117 ..... 216, 406
132531 32
132607 ..... 32, 36
133047 372
133136 394
133372 384
133631 340
133632 342

133634 340
133641 346
133877 348
133942 322
133992 ..... 236, 280
134010 412
134011 412
134437 328
134442 ..... 206, 208, 300, 304, 318, 402
134728 ..... 206, 208, 402
134730 ..... 206, 208, 402
135156 ..... 238, 282, 352, 356
135157 356
135234 392
135235 308
135248 288
135266 138
135290 354
135319 246
135335 324
135336 16
135337 ..... 2, 6, 8, 16, 22, 24, 28, 30, 34, 38, 40, 42, 44, 96, 124, 126, 128, 130, 156, 190, 194, 214, 242, 246, 252, 300, 306, 314, 366, 386, 388, 412
135369 ..... 238, 352, 356
135400 398
135401 334
135443 ..... 154, 160, 182, 186, 188, 192
135444 ..... 164, 176, 190, 192
135554 ..... 326, 398
135626 382
135630 ..... 274, 278, 382
135696 ..... 18, 246
135716 234
135723 364
135734 398
135778 ..... 84, 86, 138, 154, 160, 164, 168, 172, 176, 180, 184, 392, 410
135780 ..... 138, 144, 146, 318, 400
135783 ..... 288, 324, 336
135785 ..... 8, 16, 22, 24, 28, 30, 32, 190, 194, 288, 300, 304, 314, 358, 380, 390
135786 ..... 138, 410
135788 ..... 138, 144, 146, 150, 188, 192, 198, 326, 400
135789 ..... 326, 400
135799 ..... 2, 6, 8, 12, 16, 22, 24, 28, 30, 32, 50, 82, 84, 86, 116, 118, 124, 126, 128, 130, 132, 134, 136, 144, 148, 152, 156, 158, 190, 194, 210, 214, 230, 238, 246, 256, 260, 288, 300, 304, 310, 314, 340, 344, 346, 352, 358, 360, 364, 366, 372, 378, 380, 384, 390, 408
135800 284
135821 ..... 158, 326, 400
135865 ..... 80, 84, 86, 138, 154, 158, 160, 164, 168, 172, 176, 178, 180, 184, 308, 392, 410
135866 ..... 138, 142, 144, 146, 318, 326, 400, 410
135867 ..... 138, 142, 146, 150, 154, 188, 192, 296, 302
135868 ..... 138, 142, 144, 146, 150, 154, 158, 188, 190, 192, 194, 196, 198, 326, 400
135873 420
135889 198
135894 ..... 16, 34, 40, 42
135900 ..... 300, 304, 352
135903 ..... 22, 24, 28, 30, 36, 38, 40, 42, 90, 92, 94, 376, 408, 422
135952 140
135957 ..... 142, 146, 296, 302
135959 ..... 6, 104
135995 ..... 372, 392
136005 ..... 52, 54, 56, 58, 274, 278
136036 ..... 52, 54, 56, 58, 228, 266, 268, 270, 274, 278, 384
136050 388
136088 374
136095 ..... 80, 86, 160, 168, 172, 176, 180, 184, 392
136106 398
136113 ..... 300, 378
136122 ..... 4, 80, 88
136143 ..... 90, 92, 94, 96
136144 ..... 80, 158, 176, 392
136145 ..... 160, 168, 172, 178
136146 ..... 164, 180, 184
136150 ..... 160, 168, 172
136151 ..... 50, 116, 118, 200, 202, 204, 256, 260, 374, 394, 412, 418
136178 ..... 6, 16, 230, 360, 362, 372
136209 ..... 100, 104, 108
136211 ..... 200, 202, 204
136220 410
136231 ..... 16, 378
136240 ..... 80, 176
136244 ..... 142, 146, 318
136245 ..... 142, 146, 150, 188, 196
136248 384
136249 308
136254 194
136269 ..... 140, 322
136291 ..... 8, 100, 104, 356
136300 ..... 124, 126, 128, 130, 214, 288
136302 314
136308 ..... 384, 396
136310 ..... 84, 86
136312 228
136327 ..... 188, 192
136339 ..... 10, 246, 290, 314
136342 ..... 10, 246, 290, 314
136355 ..... 144, 148, 152, 190, 194, 198
136378 358
136395 ..... 124, 126, 128, 130, 132, 256, 260
136399 136

INDEX

136401 ..... 100, 104
136431 ..... 2, 8, 16, 22, 24, 28, 30, 34, 36, 38, 40, 42, 72, 90, 92, 94, 100, 104, 108, 114, 116, 118, 124, 128, 132, 238, 242, 246, 256, 260, 282, 300, 304, 324, 352, 356, 366, 376, 384, 394, 396, 408, 422
136438 318
136440 ..... 22, 24, 80, 88, 238, 282, 288, 352, 356, 394
136441 352
136442 ..... 144, 148, 152, 156, 162, 166, 170, 174, 178, 182, 186, 190, 194, 200
136443 106
136445 96
136446 ..... 100, 104, 108, 238
136476 408
136485 ..... 96, 212, 214, 246, 322, 376, 418
136486 ..... 156, 190, 194
136492 8
136495 ..... 144, 148, 150
136506 366
136524 140
136527 188
136540 ..... 160, 166, 170, 172, 178, 182, 186
136561 ..... 212, 214, 314
136592 ..... 100, 104, 378
136596 372
136604 212
136613 212
136635 214
136640 ..... 2, 18, 128, 132, 134, 256, 260
136653 308
136654 308
136655 ..... 208, 368, 402
136671 4
136701 ..... 80, 88
136702 ..... 100, 104
136704 372
136736 ..... 16, 356
136749 ..... 12, 230, 286
136755 394
136757 356
136759 ..... 34, 38, 40, 42, 100, 104, 246, 314, 348
136773 ..... 238, 242, 316
136824 ..... 44, 214
136842 ..... 100, 104
136850 140
136857 238
136882 ..... 100, 104
136900 328
137092 284
137118 284
137375 ..... 72, 98, 102, 298, 304
137476 ..... 98, 102, 108
137519 284
137529 ..... 114, 256, 260
137721 ..... 98, 104
137754 284
137825 102
137980 ..... 110, 256, 260
139003 76
140225 406
140250 108
141220 240
142777 340
143107 72
144531 ..... 240, 280
144724 236
145249 ..... 32, 36
145558 ..... 22, 24
145840 ..... 22, 24, 28, 30
151691 354
151793 354
152274 324
152395 394
152439 ..... 90, 92, 94, 366
152520 ..... 84, 86, 378, 384
152602 74
152655 ..... 2, 16, 50, 126, 130, 214, 246, 256, 260, 310, 324, 364, 394
152668 ..... 6, 100, 104, 136, 162, 170, 172, 212, 242, 316, 372
152670 316
152702 238
152730 ..... 32, 96, 100, 104, 106, 108, 356, 398
152731 324
152732 ..... 32, 82, 84, 86, 306, 310
152779 ..... 238, 246, 324
153151 410
156178 80
156501 370
156741 370
156743 ..... 356, 372
156948 408
158174 140
159020 388
164061 ..... 98, 102, 108
164213 ..... 98, 102, 108
164214 ..... 98, 102, 108
164215 96
164216 96
165168 136
165524 ..... 14, 216, 238
165588 136
165735 ..... 32, 36
166450 420
167307 412
172259 36
172340 ..... 298, 302
172558 356
174131 406
174304 ..... 72, 298, 304

174436 216
174612 6
174849 ..... 110, 256, 260, 272, 276
174879 ..... 84, 86
181475 288
181649 354
183506 350
183508 ..... 350, 354
184303 ..... 154, 160, 164, 168, 172, 180, 184
184461 ..... 142, 146, 150, 154, 296, 302
184463 ..... 326, 396, 400
184584 284
184587 334
184597 ..... 112, 256, 260
184643 242
184644 ..... 160, 170, 172
184646 ..... 238, 242
184648 388
184649 2
184652 ..... 252, 290, 294, 390
184656 ..... 166, 178, 190, 194, 246
184657 ..... 6, 376, 408
184658 ..... 156, 158
184659 372
184661 ..... 2, 12, 36, 300, 306, 316
184662 ..... 36, 136, 246, 340, 346, 352, 366, 372
184664 372
184665 ..... 2, 72, 246, 300, 306, 324
184667 ..... 2, 8, 100, 104, 242, 288
184669 ..... 72, 408
184672 242
184673 ..... 72, 246
184675 348
184679 242
184683 212
184685 214
184692 ..... 136, 144, 148, 152, 156, 162, 166, 170, 174, 178, 182, 186, 190, 194, 200
184694 384
184695 246
184696 ..... 12, 74, 264, 316
184697 ..... 112, 256, 260
184701 212
184705 214
184706 ..... 20, 214, 322, 418
184708 ..... 100, 104, 238, 316
184709 ..... 46, 48, 242, 290, 294, 378, 388
184711 ..... 18, 32, 36, 324, 386, 388
184712 ..... 2, 300, 304, 372
184714 ..... 52, 54, 56, 58, 104, 246, 324, 394, 398, 408
184717 ..... 84, 86, 90, 92, 94, 242, 288, 422
184718 16
187137 ..... 360, 362
187428 ..... 350, 354
187477 336
187518 356
187660 392
190752 388
191353 ..... 100, 104
191489 ..... 6, 22, 26, 28, 30, 38, 40, 42, 96, 300, 306
193187 240
193240 232
193241 232
193242 232
193243 232
194082 322
194521 340
197122 356
197135 ..... 100, 104
197171 ..... 22, 24, 28, 30, 316, 366, 384, 388
197229 214
197230 212
197263 ..... 348, 360, 362
197275 32
197319 408
197320 ..... 238, 322, 408
206340 214
209045 326
210340 ..... 236, 280
210661 236
210690 232
210918 238
210985 ..... 234, 282
212250 370
213084 ..... 360, 362
213110 356
213112 356
213363 392
213418 380
213419 380
213420 354
213459 404
213523 422
213525 422
213546 350
213552 350
213554 350
213561 422
213562 422
213567 422
213568 422
213573 422
213574 422
213579 422
213580 422
213608 348
213633 388
213634 388
213635 388
213649 350

213654 350
213656 348
213657 348
213659 350
213660 348
213679 350
213713 376
213731 352
213733 352
213750 350
213801 350
213802 350
213851 ..... 350, 354
213857 354
213859 350
220084 216
220317 354
220766 340
220807 226
220814 226
220817 222
220824 222
220831 224
220832 224
220834 224
220835 226
220836 222
220939 ..... 110, 256, 260
220941 ..... 110, 256, 260, 284
226280 ..... 52, 54, 56, 58, 228, 274, 278
226295 ..... 52, 54, 56, 58, 268, 270, 274, 278
226400 72
226861 ..... 56, 58
226926 72
226927 72
226941 ..... 60, 66, 70
226983 ..... 60, 64, 68
227656 32
227747 32
227914 ..... 32, 36
228292 ..... 98, 102, 108
228299 ..... 98, 102
228301 ..... 98, 102
228302 108
228316 ..... 114, 256, 260
228319 ..... 110, 254, 258
228322 96
228338 ..... 84, 86
228381 ..... 90, 92, 94
228382 102
228384 102
228385 102
228460 ..... 98, 104
228477 ..... 100, 104
228478 ..... 98, 104
228479 ..... 98, 104
228485 ..... 98, 104
228604 ..... 98, 102
228611 ..... 98, 102
228614 98
228619 102
228848 102
230483 ..... 240, 280
230968 ..... 240, 280
231368 380
231448 358
231765 388
231766 388
232219 154
232233 ..... 154, 188, 192
232395 ..... 154, 160, 164, 168, 172, 180, 184
232397 ..... 188, 192
232405 ..... 188, 192
232676 212
232762 264
232806 136
233371 ..... 298, 302
233443 ..... 298, 304
233445 ..... 300, 304
233446 ..... 300, 304
233447 ..... 298, 304
233450 ..... 298, 302
233513 ..... 298, 302
233514 ..... 298, 304
233516 304
233519 298
233552 304
233621 ..... 298, 304
233622 ..... 298, 304
233623 ..... 298, 304
233625 ..... 298, 304
233635 266
233654 298
233655 298
233656 298
233657 298
233658 298
233659 298
233660 298
233661 298
233662 304
233663 304
233669 304
233705 ..... 298, 304
233706 ..... 298, 304
233724 ..... 298, 302
233725 ..... 296, 302
233736 298
233738 298
233740 302

233741 302
233748 228
233770 228
233799 266
233800 266
233841 246
233912 210
233913 210
233914 210
237363 408
240010 388
240012 388
240013 388
240254 388
240264 388
245158 ..... 296, 302
245316 ..... 384, 396
245428 220
245432 220
245433 220
245753 398
245966 358
247222 236
248117 348
248144 354
248145 348
248261 370
248285 350
248348 358
248349 358
248388 354
248538 348
248643 ..... 212, 214
248833 388
248914 388
251879 212
251881 212
252051 ..... 322, 388, 418
252176 136
252179 ..... 288, 294
252187 ..... 352, 356
252188 ..... 352, 356
252236 316
252272 ..... 238, 282, 384
252284 16
252288 356
252291 ..... 322, 388, 418
252292 316
252307 ..... 142, 146, 296, 302
252351 328
252398 316
252423 76
252462 324
252541 ..... 12, 352, 356
252564 372
252581 ..... 4, 80, 88
252621 ..... 296, 302
252633 154
252638 352
252639 356
252655 246
252687 ..... 112, 134, 256, 260, 274, 278
252691 ..... 352, 356
252692 392
252694 410
252701 352
252703 ..... 348, 360, 362
252795 ..... 138, 318
252814 ..... 326, 398
252902 138
252958 232
254183 394
255461 ..... 160, 168, 172
257054 78
257089 76
258318 376
258391 244
258700 376
258876 ..... 272, 276, 376
273052 284
273078 ..... 98, 102
273122 ..... 90, 92, 94
273138 ..... 90, 92, 94
273258 ..... 98, 102
273259 ..... 98, 102
273278 ..... 90, 94
273281 92
273283 ..... 90, 94
273284 ..... 92, 96
273285 ..... 188, 192
273304 ..... 90, 92, 94
273309 96
273347 ..... 114, 254, 260
273373 114
273375 ..... 116, 118
273376 114
273440 216
273453 262
273523 ..... 116, 118, 254, 258
273524 ..... 114, 254, 258, 286
273536 ..... 114, 254, 258
273594 262
273637 96
273653 ..... 84, 86
273666 ..... 114, 116, 118
273680 80
273689 262
273758 ..... 98, 102
273759 108
273772 96

273777 ..... 90, 92, 94, 96, 286
273787 84
273788 86
273789 86
273790 80
273795 80
273798 80
273813 ..... 132, 254
273823 132
273831 ..... 90, 92, 94, 96
273860 80
273861 ..... 90, 92, 94
273873 216
273875 ..... 98, 102
273877 110
273907 ..... 98, 102, 262
273926 ..... 98, 102, 108
273963 ..... 98, 102, 262
273968 ..... 134, 254, 258
275211 32
275232 ..... 32, 36
275308 38
275309 38
275319 ..... 24, 30
275320 ..... 24, 30
275324 32
275332 36
275348 32
275375 32
275404 22
275405 22
275406 38
275407 38
275460 24
275461 24
275464 38
275465 38
275483 28
275484 28
275513 40
275514 40
275521 296
275524 296
275530 296
275532 296
275533 296
275542 ..... 296, 302
275543 ..... 296, 302
275614 296
275640 42
275641 42
275675 ..... 28, 30
275676 30
275690 ..... 40, 42
275691 304
275692 302
275770 ..... 40, 42
275779 42
275837 ..... 24, 28
275860 36
275864 ..... 36, 272, 276
275877 32
275879 32
275902 32
275938 ..... 22, 24
275941 ..... 22, 24
275960 42
275965 30
276062 376
276117 376
276140 350
276180 352
276183 356
276206 350
276326 406
276671 404
276681 388
276770 376
276790 328
276839 ..... 272, 276, 348
279528 216
283002 72
283008 308
283046 142
283047 142
283048 142
283051 196
283052 196
283053 168
283055 168
283056 168
283057 ..... 160, 168, 172
283058 ..... 160, 168, 172
283059 ..... 160, 164, 168, 172, 180, 184
283060 160
283061 ..... 296, 302
283062 ..... 296, 302
283063 ..... 142, 146, 150
283065 ..... 142, 146
283066 308
283074 ..... 180, 184
283075 ..... 180, 184
283077 ..... 296, 302
283091 ..... 188, 192
283092 ..... 188, 192
283096 180
283102 142
283104 142
283141 168
283143 168

283144 168
283164 196
283172 146
283173 146
283174 146
283180 168
283182 168
283183 168
283199 196
283200 196
283201 142
283202 ..... 142, 146, 150
283205 196
283231 142
283232 142
283233 142
283238 150
283239 150
283242 150
283243 150
283244 154
283245 154
283246 160
283247 160
283248 160
283249 160
283251 164
283252 190
283253 188
283254 188
283255 188
283256 188
283257 190
283258 164
283259 164
283260 164
283261 164
283262 164
283263 164
283283 158
283284 158
283285 158
283293 154
283294 154
283295 154
283296 154
283297 154
283327 164
283412 150
283413 150
283431 184
283432 184
283433 184
283447 172
283449 172
283450 172
283456 142
283457 142
283458 142
283461 196
283462 196
283463 146
283464 146
283465 146
283468 196
283469 196
283500 ..... 138, 140
283502 ..... 138, 140
283515 150
283519 150
283520 176
283521 176
283522 176
283523 176
283525 192
283526 176
283527 180
283528 180
283529 184
283531 184
283533 184
283534 180
283535 180
283540 ..... 180, 184
283541 180
283542 180
283555 ..... 298, 304
283567 140
283569 140
283571 ..... 296, 302
283579 308
283580 192
283581 178
283582 176
283697 200
283747 178
283750 ..... 164, 180
283785 176
283791 ..... 160, 168, 172
283797 ..... 144, 146, 160, 168, 172
283807 ..... 144, 148, 160, 168, 172
283810 176
283818 ..... 150, 154, 164, 176, 182, 184, 190, 194, 200
283820 ..... 150, 154, 164, 176, 180, 184, 190, 194, 200
283822 172
283823 172
283824 172
283849 ..... 200, 202, 204
283984 ..... 144, 146, 150
283987 ..... 166, 176, 190, 192

283988 ..... 166, 176, 190, 192
283989 ..... 166, 176, 190, 192
283990 158
283993 154
284215 234
284548 234
284549 240
284550 242
286087 72
286089 ..... 72, 76
286257 ..... 52, 54, 56, 58, 272, 276
286315 ..... 52, 56, 268, 272, 276
286316 ..... 52, 56, 268, 272, 276
286317 ..... 56, 250, 278
286318 ..... 52, 54, 58, 248, 270, 272
286319 ..... 52, 54, 56, 58, 248, 250, 270, 272, 276
286320 58
286321 ..... 248, 250
286322 ..... 248, 250
286323 ..... 248, 250
286329 ..... 52, 56, 272, 276
286330 ..... 54, 58, 270
286331 ..... 52, 54, 56, 58, 270, 272, 276
286332 ..... 56, 250, 278
286333 58
286354 72
286362 ..... 66, 70
286363 ..... 66, 70
286440 ..... 60, 66, 70
286445 76
286461 ..... 60, 64, 68, 268, 270, 272, 276
286462 ..... 60, 64, 68
286463 ..... 64, 68
286464 ..... 64, 68
286465 ..... 64, 68
286466 ..... 64, 68
286475 ..... 60, 66, 70, 268, 270, 272, 276
286476 ..... 60, 66, 70, 268, 270, 272, 276
286477 ..... 62, 66, 70, 268, 270, 272, 276
286478 ..... 62, 66, 70
286479 ..... 20, 62, 66, 70, 272, 276
286481 ..... 60, 66, 70, 272, 276
286483 76
286485 76
286486 76
286488 76
286489 76
286490 76
286493 ..... 60, 64, 68
286562 ..... 60, 64, 68
286563 ..... 64, 68
286564 ..... 60, 68
286565 ..... 60, 64, 68
286566 60
286567 60
286575 68
286576 64
286597 60
286598 60
286599 60
286621 ..... 62, 66, 70
286627 ..... 60, 64, 68
286628 ..... 64, 68
286629 ..... 64, 68
286665 56
286666 56
286669 52
286670 52
286676 58
286677 58
286679 54
286680 54
286687 250
286688 250
286690 248
286691 248
286692 248
286703 72
286705 ..... 52, 54, 56, 58
286741 6
286861 ..... 64, 68, 278
286862 ..... 64, 68
286863 ..... 64, 68
286866 64
286867 68
286888 64
286889 68
287449 392
287450 392
287451 392
287701 232
287702 406
287705 406
287859 404
287887 ..... 360, 362
287888 ..... 360, 362
287889 362
287890 362
287939 388
288195 216
289220 2
289235 10
289261 2
289358 2
289359 10
289375 16
289380 16
289439 16
289483 16
289487 16

289618 16
289621 16
289654 12
289742 2
289759 136
289762 216
289763 216
289869 136
289880 80
289924 16
289925 16
291484 212
291485 212
292692 ..... 234, 282
293053 ..... 322, 376, 418
293054 ..... 322, 418
295211 388
295212 388
295213 388
295261 376
295399 384
295407 384
295542 416
295766 384
295770 384
295853 ..... 384, 396
295927 394
295992 376
301115 8
301126 376
301127 376
301318 392
301427 ..... 350, 354, 368
301441 354
301513 370
301629 408
301633 370
301805 358
301806 358
301807 358
301971 332
301992 356
301993 354
301994 352
302204 406
303021 236
303033 236
303169 240
303251 ..... 238, 282
303283 236
303341 236
303379 232
303380 236
303486 234
303491 234
303492 ..... 234, 282
303520 282
303525 ..... 234, 282
303691 234
303693 234
303766 234
303832 236
303839 ..... 232, 282
303898 236
303961 232
304040 376
304494 360
304514 350
304520 350
304521 354
304611 308
304658 322
304668 322
304931 354
307727 216
308056 352
308536 348
308538 350
308648 ..... 352, 356
308658 392
308684 404
308725 ..... 324, 332
308726 ..... 324, 336
308732 324
308740 324
308755 324
308774 380
308848 336
308850 350
308852 336
308859 350
308878 374
308879 374
311044 122
311045 122
311055 284
311069 284
311207 110
311210 110
311237 ..... 90, 92, 94
311238 ..... 90, 92, 94
311284 84
311285 80
311303 110
311306 ..... 110, 254
311318 214
311321 284
311322 284
311325 ..... 110, 254, 258
311327 ..... 110, 254, 258

311347 ..... 254, 258
311359 96
311365 ..... 110, 258
311368 ..... 110, 258
311464 230
311493 216
311523 ..... 110, 254, 258, 272, 276
311524 ..... 110, 134, 254, 258, 272, 276
311588 110
311589 110
311611 ..... 80, 86
311612 80
311613 ..... 80, 86
311615 ..... 114, 254, 258
311617 ..... 114, 254, 258
311620 ..... 98, 102
311627 80
311632 96
311643 122
311644 122
311645 122
311646 122
311647 122
311648 122
311672 ..... 114, 254, 258
311694 128
311695 130
311729 ..... 128, 254, 258
311752 ..... 128, 254
311753 ..... 130, 254
311789 268
311790 270
311795 134
311807 318
311808 318
311810 318
311811 318
311814 318
311815 318
311816 318
311822 ..... 134, 254
311860 318
311863 ..... 124, 258
311864 ..... 126, 258
311868 258
311870 258
311882 262
311906 ..... 132, 254, 258
311949 84
311964 ..... 124, 128, 132, 254, 258
311965 ..... 126, 130, 254, 258
312654 ..... 144, 148, 150, 154, 160, 164, 168, 172, 176, 182, 184, 190, 194, 200
312673 252
312675 136
312680 136
312824 420
313035 ..... 124, 126, 128, 130
313064 210
313192 210
313303 16
313304 16
313374 252
313406 232
313425 232
313432 16
313461 244
313501 ..... 308, 312
313502 ..... 308, 312
313566 230
313644 210
313705 230
313725 216
313728 406
313729 216
313733 216
313734 394
313744 308
313745 308
313749 308
313750 308
313767 10
313768 216
313780 308
313783 16
313787 216
313788 308
313789 308
313790 310
313797 308
313798 312
313799 312
313800 312
313801 308
313802 312
313803 314
313804 312
313805 312
313806 312
313807 312
313808 308
313809 312
313810 312
313811 314
313812 314
313813 312
313814 312
313815 312
313816 314
313817 312

313818 312
313819 312
313820 312
313821 312
313822 314
313824 312
313825 312
313826 312
313827 312
313828 312
313829 314
313830 314
313831 314
313832 316
313833 312
313834 312
313835 312
313836 312
313837 314
313838 314
313839 314
313841 312
313843 316
313844 314
313845 314
313846 316
313847 314
313848 314
313849 314
313869 312
313882 312
313883 314
313884 312
313940 210
313964 ..... 90, 92, 94, 96
314062 348
314076 404
314082 332
314136 ..... 350, 354
314169 ..... 350, 354
314173 340
314174 340
314276 370
314292 392
314389 398
314391 400
314392 400
314394 400
314395 396
314396 396
314397 394
314399 394
314401 400
314402 398
314416 392
314417 392
314474 384
314537 398
314585 410
314586 410
314587 410
314588 410
314645 392
314657 346
314680 366
314928 322
316044 234
316095 ..... 232, 282
316096 ..... 232, 282
316110 232
316118 232
316119 232
316284 ..... 232, 282
316293 236
316330 ..... 234, 280
316358 232
316639 238
316649 236
316662 282
316793 ..... 234, 280
316794 232
316847 ..... 234, 280
316848 ..... 234, 280
316851 ..... 234, 280
316859 ..... 238, 282
316860 ..... 238, 282
316904 242
319051 32
319095 ..... 20, 272, 276
319098 20
319099 20
319100 20
319102 20
319103 20
319105 ..... 20, 272, 276
319222 ..... 22, 24, 28, 30
319223 ..... 22, 24, 28, 30
319225 ..... 38, 40, 42
319265 36
319345 20
319346 20
319347 20
319366 ..... 28, 30
319429 48
319430 ..... 46, 48
319431 ..... 46, 48
319540 20
319583 36
319662 20
319676 36

319707 32
319708 32
319715 ..... 24, 28
319716 ..... 24, 28
319717 30
319718 30
319721 22
319722 24
319723 24
319724 ..... 24, 30
319725 ..... 24, 30
319722 28
319727 28
320011 ..... 238, 282
320026 ..... 4, 72
320039 242
320060 ..... 22, 24, 238, 282
320089 74
320148 20
320154 238
320167 32
320168 ..... 80, 88
320175 ..... 114, 256, 260
320176 ..... 242, 376
320179 114
320180 ..... 100, 104, 108, 114, 116, 118, 124, 128, 132, 256, 260, 338
320181 ..... 28, 30
320182 36
320187 ..... 112, 256, 260
320190 ..... 26, 28, 30, 46, 48, 246, 288
320192 ..... 110, 256, 260, 262
320196 80
320205 ..... 236, 240, 286
320206 ..... 32, 36
320207 ..... 90, 92, 94, 96
320208 242
320213 240
320214 72
320215 74
320218 10
320219 242
320220 ..... 246, 308
320248 210
320259 368
320290 ..... 22, 26, 28, 30, 38, 40, 42
320304 2
320311 72
320327 18
320336 ..... 200, 202, 204
320358 ..... 380, 384
320360 ..... 268, 270, 272, 276, 324
320388 322
320389 372
320390 372
320404 246
320418 324
320441 288
320448 ..... 46, 48, 200, 202, 204
322022 392
322046 370
322132 370
322142 328
322148 ..... 326, 330
322149 330
322157 330
322158 330
322160 330
322161 328
322192 332
322193 332
322195 332
322197 332
322219 370
322256 400
322372 348
322377 354
322383 402
322384 410
322397 348
322409 332
322456 340
322486 340
322555 382
322557 370
322668 374
322770 348
322870 322
322872 322
322914 ..... 358, 418
322915 340
322916 340
322917 340
322918 340
322924 340
322925 340
322926 340
322961 368
322962 368
322970 ..... 86, 358
322981 370
322996 342
322997 342
322998 342
323017 192
323018 178
323023 ..... 164, 176, 190, 192
323039 206
323040 208
323041 208

323042 208
323043 208
323049 234
323130 ..... 206, 208
323145 ..... 206, 208
323164 ..... 202, 204
323165 204
323166 ..... 202, 204
323168 200
323169 ..... 202, 204
323170 200
323171 204
323172 204
323355 196
323357 318
323373 318
323428 ..... 188, 192
323429 ..... 188, 192
323516 216
323519 188
323687 86
323688 86
323772 ..... 202, 204
323773 200
323795 ..... 202, 204
323918 200
323921 192
327086 ..... 238, 282
327089 ..... 234, 282
327179 232
327255 234
327294 240
327304 240
327428 232
327429 232
327532 240
327534 236
327535 236
327561 232
327563 240
327588 242
327600 ..... 236, 280
327649 240
327655 282
327656 280
327659 242
327664 242
327672 236
327680 242
327682 280
327692 240
327694 240
327696 240
327704 232
327710 238
327716 236
327717 ..... 240, 280
327738 236
327739 240
327740 240
327745 236
327749 236
327751 236
327755 234
327756 234
327771 240
327786 234
328085 366
328089 402
328120 336
328128 384
328133 370
328142 406
328143 384
328152 ..... 332, 336
328154 ..... 332, 336
328156 ..... 334, 336
328157 334
328158 334
328159 334
328160 334
328161 332
328162 334
328164 332
328165 332
328174 332
328175 332
328176 ..... 332, 336
328178 328
328181 332
328183 338
328184 334
328185 332
328186 332
328187 332
328188 332
328197 336
328198 336
328199 336
328200 336
328201 336
328202 336
328203 336
328261 328
328262 ..... 326, 330
328269 330
328283 328
328284 328
328288 328
328290 328

328291 328
328292 328
328293 328
328306 328
328307 328
328308 328
328309 328
328310 328
328311 328
328312 328
328313 328
328316 324
328318 402
328348 376
328349 376
328370 324
328371 324
328411 402
328412 370
328420 348
328491 370
328532 214
328534 214
328538 370
328539 214
328547 214
328549 404
328550 404
328551 404
328552 404
328556 214
328560 402
328561 404
328562 406
328565 406
328713 324
328756 366
328758 366
328760 366
328763 366
328874 410
335144 370
335160 414
335161 414
335287 404
335301 ..... 12, 244
335887 400
335891 388
335912 388
335924 ..... 114, 254, 258
337117 346
337124 350
337143 ..... 360, 362
337152 ..... 272, 276, 348, 362
337206 348
337276 354
337284 ..... 350, 354
337362 358
337366 358
337407 376
337427 330
337429 330
337430 330
337431 330
337432 330
337433 330
337440 328
337441 328
337456 376
337457 376
337463 376
337464 376
337617 404
337618 404
337634 370
337635 370
337636 370
337707 342
337709 342
337711 ..... 342, 344
337712 342
337715 342
337716 342
337717 342
337718 342
337720 342
337721 344
337722 344
337723 342
337727 342
337731 342
337732 344
337770 330
337773 330
337774 ..... 324, 326, 328
337777 366
337778 366
337779 366
337780 366
337804 354
337821 370
337823 330
340049 220
340050 226
340051 222
340052 224
340076 316
340077 314
340078 314
340095 264

340096 264
340113 2
340122 2
340129 216
340130 216
340131 406
340132 406
340146 ..... 114, 254, 258
340164 216
340183 214
340191 ..... 84, 86
340193 2
340210 244
340212 244
340215 2
340216 102
340218 214
340224 ..... 90, 92, 94
340492 272
340493 276
340548 ..... 144, 148, 160, 168, 172
340549 ..... 150, 154, 164, 176, 182, 184, 190, 194, 200
340648 86
340681 44
340841 44
347141 408
347185 324
347300 408
347342 406
347349 334
347405 332
347410 332
347416 332
347417 332
347483 384
347487 384
347500 376
347553 384
347665 380
347691 388
347692 388
347722 346
347775 376
347778 376
347923 370
347949 394
347969 400
347975 334
347976 334
347977 334
347978 334
357012 342
357064 342
357173 ..... 322, 418
357174 ..... 322, 418
357195 408
357233 362
357234 362
357386 380
357455 372
357492 370
357512 ..... 322, 418
357797 8
360004 244
360035 86
360069 244
360072 244
360076 246
360077 244
360079 244
360081 244
360095 244
360103 244
360105 246
360106 244
360108 246
360110 244
360114 244
360119 244
360120 244
360122 244
360127 12
360134 244
360144 98
360150 44
360151 44
360166 6
360168 244
360175 6
360186 100
360199 110
360201 110
360361 2
360374 16
360375 16
360376 120
360378 16
360379 16
360414 218
360415 218
360416 218
360417 218
360418 218
360421 218
360422 218
360446 218
360447 218
360449 14
360509 ..... 24, 28, 30
360520 50

360521 50
360541 216
360553 14
360655 406
360680 284
360716 406
360748 2
360749 2
360750 2
360751 2
360754 50
360755 50
360797 16
360798 16
360870 72
500448 414

B

B6042 422
B6044 422
B6045 422
B6046 422
B6057 420
B6213 422
B6275 ..... 240, 280
B6288 232
B6413 296
B6414 296
B6415 296
B6416 296
B6418 302
B6450 416
B6460 280
B6801 252
B7022 228
B7023 228
B7029 308
B7030 230
B7038 340
B7039 340
B7041 336
B7043 408
B7056 410
B7117 196
B7118 196
B7120 196
B7121 196
B7122 266
B7123 266
B7127 318
B7128 318
B7130 318
B7155 268
B7156 270
B7180 342
B7181 342
B7196 402
B7238 264
B7241 414
B7302 ..... 286, 290
B7303 294
B7304 292
B7305 292
B7306 292
B7307 292
B7312 346
B7314 366
B7317 346
B7326 342
B7338 196
B7339 318
B7342 418
B7343 362
B7344 362
B7345 362
B7346 244
B7347 366
B7348 366
B7359 254
B7362 258
B7365 272
B7366 276
B7392 240
B7410 318

C

C2051 280
C2086 286
C2087 286
C2088 286
C2089 286



CUSTOMERS
MacDon.com

DEALERS
Portal.MacDon.com

Trademarks of products are the marks of their respective manufacturers and/or distributors.

Printed in Canada