MacDon

D1 Series and FM100 Draper Header and Float Module for Combines

IMPORTANT: PAGE 35 HAS BEEN UPDATED SINCE THIS MANUAL WAS PUBLISHED.

Operator's Manual

215181 Revision A

Original Instruction

The Harvesting Specialists.

D1 Series Draper Header for Combines and FM100 Float Module

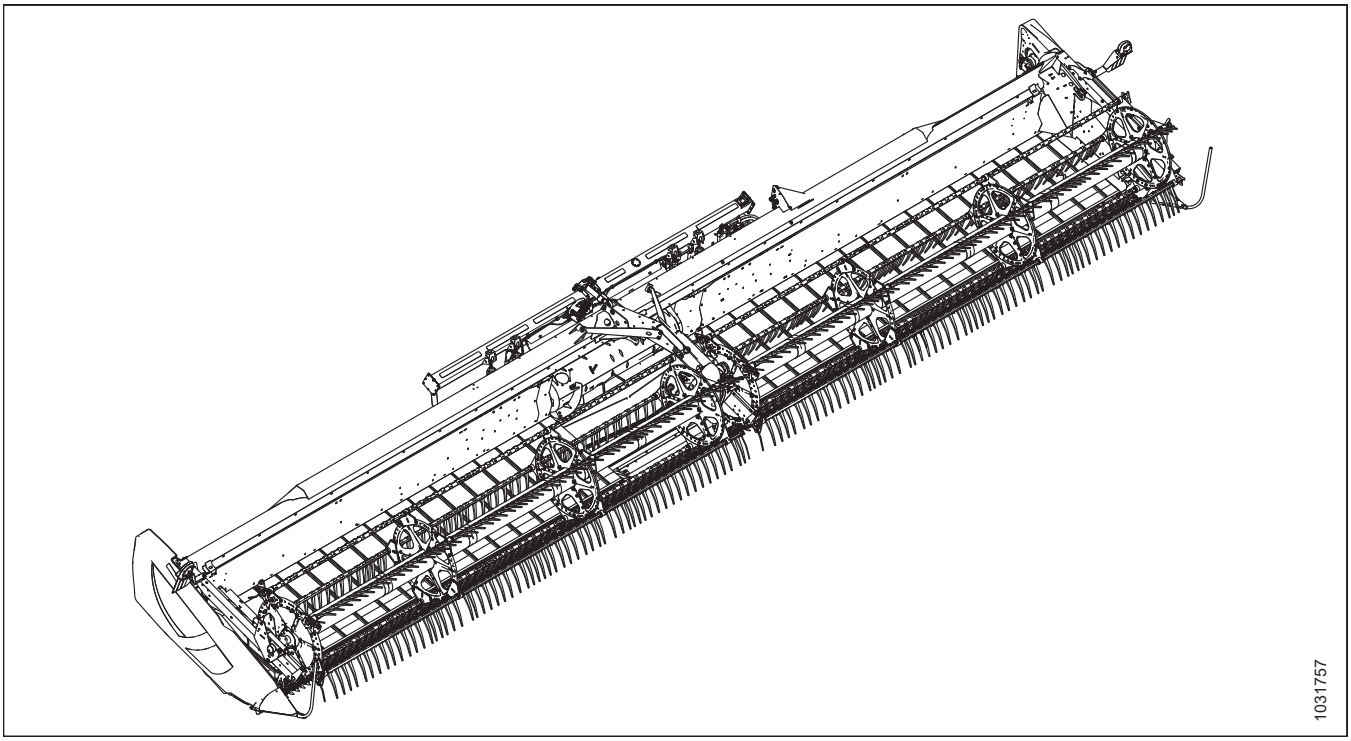

Published February 2020.

© 2020 MacDon Industries, Ltd.

The information in this publication is based on the information available and in effect at the time of printing. MacDon Industries, Ltd. makes no representation or warranty of any kind, whether expressed or implied, with respect to the information in this publication. MacDon Industries, Ltd. reserves the right to make changes at any time without notice.

Declaration of Conformity

CE

EC Declaration of Conformity

[1] MacDon

MacDon Industries Ltd.
680 Moray Street,
Winnipeg, Manitoba, Canada
R3J 3S3

[2] Combine Draper Header

[3] MacDon D1 Series

[4] As per Shipping Document

[5] February 5, 2020

[6] _____
Christoph Martens
Product Integrity

EN

We, [1]

Declare, that the product:

Machine Type: [2]

Name & Model: [3]

Serial Number(s): [4]

fulfils all the relevant provisions of the Directive 2006/42/EC.

Harmonized standards used, as referred to in Article 7(2):

EN ISO 4254-1:2013
EN ISO 4254-7:2009

Place and date of declaration: [5]

Identity and signature of the person empowered to draw up the declaration: [6]

Name and address of the person authorized to compile the technical file:

Benedikt von Riedesel
General Manager, MacDon Europe GmbH
Hagenauer Straße 59
65203 Wiesbaden (Germany)
bvonriedesel@macdon.com

BG

Ние, [1]

декларираме, че следният продукт:

Тип машина: [2]

Наименование и модел: [3]

Сериен номер(а) [4]

отговаря на всички приложими разпоредби на директива 2006/42/ЕО.

Използвани са следните хармонизирани стандарти според чл. 7(2):

EN ISO 4254-1:2013
EN ISO 4254-7:2009

Място и дата на декларацията: [5]

Име и подпис на лицето, упълномощено да изготви декларацията: [6]

Име и адрес на лицето, упълномощено да състави техническия файл:

Бенедикт фон Рийдезел
Управител, MacDon Europe GmbH
Hagenauer Straße 59
65203 Wiesbaden (Германия)
bvonriedesel@macdon.com

CZ

My, [1]

Prohlašujeme, že produkt:

Typ zařízení: [2]

Název a model: [3]

Sériové(á) číslo)a): [4]

splňuje všechna relevantní ustanovení směrnice 2006/42/EC.

Byly použity harmonizované standardy, jak je uvedeno v článku 7(2):

EN ISO 4254-1:2013
EN ISO 4254-7:2009

Místo a datum prohlášení: [5]

Identita a podpis osoby oprávněné k vydání prohlášení: [6]

Jméno a adresa osoby oprávněné k vyplnění technického souboru:

Benedikt von Riedesel
generální ředitel, MacDon Europe GmbH
Hagenauer Straße 59
65203 Wiesbaden (Německo)
bvonriedesel@macdon.com

DA

Vi, [1]

erklærer, at prduktet:

Maskintype [2]

Navn og model: [3]

Serienummer (-numre): [4]

Opfylder alle bestemmelser i direktiv 2006/42/EF.

Anvendte harmoniserede standarder, som henvist til i paragraf 7(2):

EN ISO 4254-1:2013
EN ISO 4254-7:2009

Sted og dato for erklæringen: [5]

Identitet på og underskrift fra den person, som er bemyndiget til at udarbejde erklæringen: [6]

Navn og adresse på den person, som er bemyndiget til at udarbejde den tekniske fil:

Benedikt von Riedesel
Direktør, MacDon Europe GmbH
Hagenauer Straße 59
D-65203 Wiesbaden (Tyskland)
bvonriedesel@macdon.com

DE

Wir, [1]

Erklären hiermit, dass das Produkt:

Maschinentyp: [2]

Name & Modell: [3]

Seriennummer (n): [4]

alle relevanten Vorschriften der Richtlinie 2006/42/EG erfüllt.

Harmonisierte Standards wurden, wie in folgenden Artikeln angegeben, verwendet 7(2):

EN ISO 4254-1:2013
EN ISO 4254-7:2009

Ort und Datum der Erklärung: [5]

Name und Unterschrift der Person, die dazu befugt ist, die Erklärung auszustellen: [6]

Name und Anschrift der Person, die dazu berechtigt ist, die technischen Unterlagen zu erstellen:

Benedikt von Riedesel
General Manager, MacDon Europe GmbH
Hagenauer Straße 59
65203 Wiesbaden
bvonriedesel@macdon.com

ES

Nosotros [1]

declaramos que el producto:

Tipo de máquina: [2]

Nombre y modelo: [3]

Números de serie: [4]

cumple con todas las disposiciones pertinentes de la directriz 2006/42/EC.

Se utilizaron normas armonizadas, según lo dispuesto en el artículo 7(2):

EN ISO 4254-1:2013
EN ISO 4254-7:2009

Lugar y fecha de la declaración: [5]

Identidad y firma de la persona facultada para draw redactar la declaración: [6]

Nombre y dirección de la persona autorizada para elaborar el expediente técnico:

Benedikt von Riedesel
Gerente general - MacDon Europe GmbH
Hagenauer Straße 59
65203 Wiesbaden (Alemania)
bvonriedesel@macdon.com

ET

Meie, [1]

deklareerime, et toode

Seadme tüüp: [2]

Nimi ja mudel: [3]

Seerianumbrid: [4]

vastab kõigile direktiivi 2006/42/EÜ asjakohastele sätetele.

Kasutatud on järgnevaid harmoniseeritud standardeid, millele on viidatud ka punktis 7(2):

EN ISO 4254-1:2013
EN ISO 4254-7:2009

Deklaratsiooni koht ja kuupäev: [5]

Deklaratsiooni koostamiseks volitatud isiku nimi ja allkiri: [6]

Tehnilise dokumendi koostamiseks volitatud isiku nimi ja aadress:

Benedikt von Riedesel
Peadirektor, MacDon Europe GmbH
Hagenauer Straße 59
65203 Wiesbaden (Saksamaa)
bvonriedesel@macdon.com

FR

Nous soussignés, [1]

Déclarons que le produit :

Type de machine : [2]

Nom et modèle : [3]

Numéro(s) de série : [4]

Est conforme à toutes les dispositions pertinentes de la directive 2006/42/EC.

Utilisation des normes harmonisées, comme indiqué dans l'Article 7(2):

EN ISO 4254-1:2013
EN ISO 4254-7:2009

Lieu et date de la déclaration : [5]

Identité et signature de la personne ayant reçu le pouvoir de rédiger cette déclaration : [6]

Nom et adresse de la personne autorisée à constituer le dossier technique :

Benedikt von Riedesel
Directeur général, MacDon Europe GmbH
Hagenauer Straße 59
65203 Wiesbaden (Allemagne)
bvonriedesel@macdon.com

The Harvesting Specialists MacDon

1032113

EC Declaration of Conformity

IT

Noi, [1]

Dichiariamo che il prodotto:

Tipo di macchina: [2]

Nome e modello: [3]

Numero(i) di serie: [4]

soddisfa tutte le disposizioni rilevanti della direttiva 2006/42/CE.

Utilizzo degli standard armonizzati, come indicato nell'Articolo 7(2):

EN ISO 4254-1:2013

EN ISO 4254-7:2009

Luogo e data della dichiarazione: [5]

Nome e firma della persona autorizzata a redigere la dichiarazione: [6]

Nome e persona autorizzata a compilare il file tecnico:

Benedikt von Riedesel
General Manager, MacDon Europe GmbH
Hagenauer Straße 59
65203 Wiesbaden (Germania)
bvonriedesel@macdon.com

HU

Mi, [1]

Ezennel kijelentjük, hogy a következő termék:

Gép típusa: [2]

Név és modell: [3]

Sériaszám(ok): [4]

teljesíti a következő irányelv összes vonatkozó előírásait: 2006/42/EK.

Az alábbi harmonizált szabványok kerültek alkalmazásra a 7(2) cikkely szerint:

EN ISO 4254-1:2013

EN ISO 4254-7:2009

A nyilatkozattétel ideje és helye: [5]

Azon személy kilétе és aláírása, aki jogosult a nyilatkozat elkészítésére: [6]

Azon személy neve és aláírása, aki felhatalmazott a műszaki dokumentáció összeállítására:

Benedikt von Riedesel
Vezérigazgató, MacDon Europe GmbH
Hagenauer Straße 59
65203 Wiesbaden (Németország)
bvonriedesel@macdon.com

LT

Mes, [1]

Pareiškiame, kad šis produktas:

Mašinos tipas: [2]

Pavadinimas ir modelis: [3]

Serijos numeris (-iai): [4]

atitinka taikomus reikalavimus pagal Direktyvą 2006/42/EB.

Naudojami harmonizuoti standartai, kai nurodoma straipsnyje 7(2):

EN ISO 4254-1:2013

EN ISO 4254-7:2009

Deklaracijos vieta ir data: [5]

Asmens tapatybės duomenys ir parašas asmens, įgalioto sudaryti šią deklaraciją: [6]

Vardas ir pavardė asmens, kuris įgaliotas sudaryti šį techninį failą:

Benedikt von Riedesel
Generalinis direktorius, MacDon Europe GmbH
Hagenauer Straße 59
65203 Wiesbaden (Vokietija)
bvonriedesel@macdon.com

LV

Mēs, [1]

Deklarējam, ka produkts:

Mašīnas tips: [2]

Nosaukums un modelis: [3]

Sērijas numurs(-i): [4]

Atbilst visām būtiskajām Direktīvas 2006/42/EK prasībām.

Piemēroti šādi saskaņotie standarti , kā minēts 7. panta 2. punktā:

EN ISO 4254-1:2013

EN ISO 4254-7:2009

Deklarācijas parakstīšanas vieta un datums: [5]

Tās personas vārds, uzvārds un paraksts, kas ir pilnvarota sagatavot šo deklarāciju: [6]

Tās personas vārds, uzvārds un adrese, kas ir pilnvarota sastādīt tehnisko dokumentāciju:

Benedikts fon Rīdzels
Ģenerāldirektors, MacDon Europe GmbH
Hagenauer Straße 59
65203 Wiesbaden (Vācija)
bvonriedesel@macdon.com

NL

Wij, [1]

Verklaren dat het product:

Machinetype: [2]

Naam en model: [3]

Serienummer(s): [4]

voldoet aan alle relevante bepalingen van de Richtlijn 2006/42/EC.

Geharmoniseerde normen toegepast, zoals vermeld in Artikel 7(2):

EN ISO 4254-1:2013

EN ISO 4254-7:2009

Plaats en datum van verklaring: [5]

Naam en handtekening van de bevoegde persoon om de verklaring op te stellen: [6]

Naam en adres van de geautoriseerde persoon om het technisch dossier samen te stellen:

Benedikt von Riedesel
Algemeen directeur, MacDon Europe GmbH
Hagenauer Straße 59
65203 Wiesbaden (Duitsland)
bvonriedesel@macdon.com

PO

My niżej podpisani, [1]

Oświadczamy, że produkt:

Typ urządzenia: [2]

Nazwa i model: [3]

Numer seryjny/numery seryjne: [4]

spełnia wszystkie odpowiednie przepisy dyrektywy 2006/42/WE.

Zastosowaliśmy następujące (zharmonizowane) normy zgodnie z artykułem 7(2):

EN ISO 4254-1:2013

EN ISO 4254-7:2009

Data i miejsce oświadczenia: [5]

Imię i nazwisko oraz podpis osoby upoważnionej do przygotowania deklaracji: [6]

Imię i nazwisko oraz adres osoby upoważnionej do przygotowania dokumentacji technicznej:

Benedikt von Riedesel
Dyrektor generalny, MacDon Europe GmbH
Hagenauer Straße 59
65203 Wiesbaden (Niemcy)
bvonriedesel@macdon.com

PT

Nós, [1]

Declaramos, que o produto:

Tipo de máquina: [2]

Nome e Modelo: [3]

Número(s) de Série: [4]

cumpre todas as disposições relevantes da Directiva 2006/42/CE.

Normas harmonizadas aplicadas, conforme referido no Artigo 7(2):

EN ISO 4254-1:2013

EN ISO 4254-7:2009

Local e data da declaração: [5]

Identidade e assinatura da pessoa autorizada a elaborar a declaração: [6]

Nome e endereço da pessoa autorizada a compilar o ficheiro técnico:

Benedikt von Riedesel
Gerente Geral, MacDon Europa Ltda.
Hagenauer Straße 59
65203 Wiesbaden (Alemanha)
bvonriedesel@macdon.com

RO

Noi, [1]

Declarăm, că următorul produs:

Tipul mașinii: [2]

Denumirea și modelul: [3]

Număr (numere) serie: [4]

corespunde tuturor dispozițiilor esențiale ale directivei 2006/42/EC.

Au fost aplicate următoarele standarde armonizate conform articolului 7(2):

EN ISO 4254-1:2013

EN ISO 4254-7:2009

Data și locul declarației: [5]

Identitatea și semnătura persoanei împuternicite pentru întocmirea declarației: [6]

Numele și semnătura persoanei autorizate pentru întocmirea cărții tehnice:

Benedikt von Riedesel
Manager General, MacDon Europe GmbH
Hagenauer Straße 59
65203 Wiesbaden (Germania)
bvonriedesel@macdon.com

SR

Mi, [1]

Izjavljujemo da proizvod

Tip mašine: [2]

Naziv i model: [3]

Serijski broj(evi): [4]

Ispunjava sve relevantne odredbe direktive 2006/42/EC.

Korišćeni su usklađeni standardi kao što je navedeno u članu 7(2):

EN ISO 4254-1:2013

EN ISO 4254-7:2009

Datum i mesto izdavanja deklaracije: [5]

Identitet i potpis lica ovlašćenog za sastavljanje deklaracije: [6]

Ime i adresa osobe ovlašćene za sastavljanje tehničke datoteke:

Benedikt von Riedesel
Generalni direktor, MacDon Europe GmbH
Hagenauer Straße 59
65203 Wiesbaden (Nemačka)
bvonriedesel@macdon.com

SV

Vi, [1]

Intygar att produkten:

Maskintyp: [2]

Namn och modell: [3]

Serienummer: [4]

uppfyller alla relevanta villkor i direktivet 2006/42/EG.

Harmonierade standarder används, såsom anges i artikel 7(2):

EN ISO 4254-1:2013

EN ISO 4254-7:2009

Plats och datum för intyget: [5]

Identitet och signatur för person med befogenhet att upprätta intyget: [6]

Namn och adress för person behörig att upprätta den tekniska dokumentationen:

Benedikt von Riedesel
Administrativ chef, MacDon Europe GmbH
Hagenauer Straße 59
65203 Wiesbaden (Tyskland)
bvonriedesel@macdon.com

SL

Mi, [1]

izjavljamo, da izdelek:

Vrsta stroja: [2]

Ime in model: [3]

Serijska/-e številka/-e: [4]

ustreza vsem zadevnim določbam Direktive 2006/42/ES.

Uporabljeni usklajeni standardi, kot je navedeno v členu 7(2):

EN ISO 4254-1:2013

EN ISO 4254-7:2009

Kraj in datum izjave: [5]

Istovetnost in podpis osebe, opolnomočene za pripravo izjave: [6]

Ime in naslov osebe, pooblaščene za pripravo tehnične datoteke:

Benedikt von Riedesel
Generalni direktor, MacDon Europe GmbH
Hagenauer Straße 59
65203 Wiesbaden (Nemčija)
bvonriedesel@macdon.com

SK

My, [1]

týmto prehlasujeme, že tento výrobok:

Typ zariadenia: [2]

Názov a model: [3]

Výrobné číslo: [4]

spĺňa príslušné ustanovenia a základné požiadavky smernice č. 2006/42/ES.

Použité harmonizované normy, ktoré sa uvádzajú v Článku č. 7(2):

EN ISO 4254-1:2013

EN ISO 4254-7:2009

Miesto a dátum prehlásenia: [5]

Meno a podpis osoby oprávnenej vypracovať toto prehlásenie: [6]

Meno a adresa osoby oprávnenej zostaviť technický súbor:

Benedikt von Riedesel
Generálny riaditeľ MacDon Europe GmbH
Hagenauer Straße 59
65203 Wiesbaden (Nemecko)
bvonriedesel@macdon.com

1032114

EC Declaration of Conformity

[1] MacDon

MacDon Industries Ltd.
680 Moray Street,
Winnipeg, Manitoba, Canada
R3J 3S3

[2] Float Module

[3] MacDon FM100

[4] As per Shipping Document

[5] May 9, 2019

[6] _____
Christoph Martens
Product Integrity

EN

We, [1]

Declare, that the product:

Machine Type: [2]

Name & Model: [3]

Serial Number(s): [4]

fulfils all the relevant provisions of the Directive 2006/42/EC.

Harmonized standards used, as referred to in Article 7(2):

EN ISO 4254-1:2013
EN ISO 4254-7:2009

Place and date of declaration: [5]

Identity and signature of the person empowered to draw up the declaration: [6]

Name and address of the person authorized to compile the technical file:

Benedikt von Riedesel
General Manager, MacDon Europe GmbH
Hagenauer Straße 59
65203 Wiesbaden (Germany)
bvonriedesel@macdon.com

BG

Ние, [1]

декларираме, че следният продукт:

Тип машина: [2]

Наименование и модел: [3]

Сериен номер(а) [4]

отговаря на всички приложими разпоредби на директива 2006/42/ЕО.

Използвани са следните хармонизирани стандарти според чл. 7(2):

EN ISO 4254-1:2013
EN ISO 4254-7:2009

Място и дата на декларацията: [5]

Име и подпис на лицето, упълномощено да изготви декларацията: [6]

Име и адрес на лицето, упълномощено да състави техническия файл:

Бенедикт фон Рийдезел
Управител, MacDon Europe GmbH
Hagenauer Straße 59
65203 Wiesbaden (Германия)
bvonriedesel@macdon.com

CZ

My, [1]

Prohlašujeme, že produkt:

Typ zařízení: [2]

Název a model: [3]

Sériové(á) číslo)a): [4]

splňuje všechna relevantní ustanovení směrnice 2006/42/EC.

Byly použity harmonizované standardy, jak je uvedeno v článku 7(2):

EN ISO 4254-1:2013
EN ISO 4254-7:2009

Místo a datum prohlášení: [5]

Identita a podpis osoby oprávněné k vydání prohlášení: [6]

Jméno a adresa osoby oprávněné k vyplnění technického souboru:

Benedikt von Riedesel
generální ředitel, MacDon Europe GmbH
Hagenauer Straße 59
65203 Wiesbaden (Německo)
bvonriedesel@macdon.com

DA

Vi, [1]

erklærer, at prduktet:

Maskintype [2]

Navn og model: [3]

Serienummer (-numre): [4]

Opfylder alle bestemmelser i direktiv 2006/42/EF.

Anvendte harmoniserede standarder, som henvist til i paragraf 7(2):

EN ISO 4254-1:2013
EN ISO 4254-7:2009

Sted og dato for erklæringen: [5]

Identitet på og underskrift fra den person, som er bemyndiget til at udarbejde erklæringen: [6]

Navn og adresse på den person, som er bemyndiget til at udarbejde den tekniske fil:

Benedikt von Riedesel
Direktør, MacDon Europe GmbH
Hagenauer Straße 59
D-65203 Wiesbaden (Tyskland)
bvonriedesel@macdon.com

DE

Wir, [1]

Erklären hiermit, dass das Produkt:

Maschinentyp: [2]

Name & Modell: [3]

Seriennummer (n): [4]

alle relevanten Vorschriften der Richtlinie 2006/42/EG erfüllt.

Harmonisierte Standards wurden, wie in folgenden Artikeln angegeben, verwendet 7(2):

EN ISO 4254-1:2013
EN ISO 4254-7:2009

Ort und Datum der Erklärung: [5]

Name und Unterschrift der Person, die dazu befugt ist, die Erklärung auszustellen: [6]

Name und Anschrift der Person, die dazu berechtigt ist, die technischen Unterlagen zu erstellen:

Benedikt von Riedesel
General Manager, MacDon Europe GmbH
Hagenauer Straße 59
65203 Wiesbaden
bvonriedesel@macdon.com

ES

Nosotros [1]

declaramos que el producto:

Tipo de máquina: [2]

Nombre y modelo: [3]

Números de serie: [4]

cumple con todas las disposiciones pertinentes de la directriz 2006/42/EC.

Se utilizaron normas armonizadas, según lo dispuesto en el artículo 7(2):

EN ISO 4254-1:2013
EN ISO 4254-7:2009

Lugar y fecha de la declaración: [5]

Identidad y firma de la persona facultada para draw redactar la declaración: [6]

Nombre y dirección de la persona autorizada para elaborar el expediente técnico:

Benedikt von Riedesel
Gerente general - MacDon Europe GmbH
Hagenauer Straße 59
65203 Wiesbaden (Alemania)
bvonriedesel@macdon.com

ET

Meie, [1]

deklareerime, et toode

Seadme tüüp: [2]

Nimi ja mudel: [3]

Seerianumbrid: [4]

vastab kõigile direktiivi 2006/42/EÜ asjakohastele sätetele.

Kasutatud on järgnevaid harmoniseeritud standardeid, millele on viidatud ka punktis 7(2):

EN ISO 4254-1:2013
EN ISO 4254-7:2009

Deklaratsiooni koht ja kuupäev: [5]

Deklaratsiooni koostamiseks volitatud isiku nimi ja allkiri: [6]

Tehnilise dokumendi koostamiseks volitatud isiku nimi ja aadress:

Benedikt von Riedesel
Peadirektor, MacDon Europe GmbH
Hagenauer Straße 59
65203 Wiesbaden (Saksamaa)
bvonriedesel@macdon.com

FR

Nous soussignés, [1]

Déclarons que le produit :

Type de machine : [2]

Nom et modèle : [3]

Numéro(s) de série : [4]

Est conforme à toutes les dispositions pertinentes de la directive 2006/42/EC.

Utilisation des normes harmonisées, comme indiqué dans l'Article 7(2):

EN ISO 4254-1:2013
EN ISO 4254-7:2009

Lieu et date de la déclaration : [5]

Identité et signature de la personne ayant reçu le pouvoir de rédiger cette déclaration : [6]

Nom et adresse de la personne autorisée à constituer le dossier technique :

Benedikt von Riedesel
Directeur général, MacDon Europe GmbH
Hagenauer Straße 59
65203 Wiesbaden (Allemagne)
bvonriedesel@macdon.com

The Harvesting Specialists MacDon

1029505

EC Declaration of Conformity

IT

Noi, [1]

Dichiariamo che il prodotto:

Tipo di macchina: [2]

Nome e modello: [3]

Numero(i) di serie: [4]

soddisfa tutte le disposizioni rilevanti della direttiva 2006/42/CE.

Utilizzo degli standard armonizzati, come indicato nell'Articolo 7(2):

EN ISO 4254-1:2013

EN ISO 4254-7:2009

Luogo e data della dichiarazione: [5]

Nome e firma della persona autorizzata a redigere la dichiarazione: [6]

Nome e persona autorizzata a compilare il file tecnico:

Benedikt von Riedesel
General Manager, MacDon Europe GmbH
Hagenauer Straße 59
65203 Wiesbaden (Germania)
bvonriedesel@macdon.com

HU

Mi, [1]

Ezennel kijelentjük, hogy a következő termék:

Gép típusa: [2]

Név és modell: [3]

Sériaszám(ok): [4]

teljesíti a következő irányelv összes vonatkozó előírásait: 2006/42/EK.

Az alábbi harmonizált szabványok kerültek alkalmazásra a 7(2) cikkely szerint:

EN ISO 4254-1:2013

EN ISO 4254-7:2009

A nyilatkozattétel ideje és helye: [5]

Azon személy kiléte és aláírása, aki jogosult a nyilatkozat elkészítésére: [6]

Azon személy neve és aláírása, aki felhatalmazott a műszaki dokumentáció összeállítására:

Benedikt von Riedesel
Vezérigazgató, MacDon Europe GmbH
Hagenauer Straße 59
65203 Wiesbaden (Németország)
bvonriedesel@macdon.com

LT

Mes, [1]

Pareiškiame, kad šis produktas:

Mašinos tipas: [2]

Pavadinimas ir modelis: [3]

Serijos numeris (-iai): [4]

atitinka taikomus reikalavimus pagal Direktyvą 2006/42/EB.

Naudojami harmonizuoti standartai, kai nurodoma straipsnyje 7(2):

EN ISO 4254-1:2013

EN ISO 4254-7:2009

Deklaracijos vieta ir data: [5]

Asmens tapatybės duomenys ir parašas asmens, įgalioto sudaryti šią deklaraciją: [6]

Vardas ir pavardė asmens, kuris įgaliotas sudaryti šį techninį failą:

Benedikt von Riedesel
Generalinis direktorius, MacDon Europe GmbH
Hagenauer Straße 59
65203 Wiesbaden (Vokietija)
bvonriedesel@macdon.com

LV

Mēs, [1]

Deklarējam, ka produkts:

Mašīnas tips: [2]

Nosaukums un modelis: [3]

Sērijas numurs(-i): [4]

Atbilst visām būtiskajām Direktīvas 2006/42/EK prasībām.

Piemēroti šādi saskaņotie standarti , kā minēts 7. panta 2. punktā:

EN ISO 4254-1:2013

EN ISO 4254-7:2009

Deklarācijas parakstīšanas vieta un datums: [5]

Tās personas vārds, uzvārds un paraksts, kas ir pilnvarota sagatavot šo deklarāciju: [6]

Tās personas vārds, uzvārds un adrese, kas ir pilnvarota sastādīt tehnisko dokumentāciju:

Benedikts fon Rīdzels
Ģenerāldirektors, MacDon Europe GmbH
Hagenauer Straße 59
65203 Wiesbaden (Vācija)
bvonriedesel@macdon.com

NL

Wij, [1]

Verklaren dat het product:

Machinetype: [2]

Naam en model: [3]

Serienummer(s): [4]

voldoet aan alle relevante bepalingen van de Richtlijn 2006/42/EC.

Geharmoniseerde normen toegepast, zoals vermeld in Artikel 7(2):

EN ISO 4254-1:2013

EN ISO 4254-7:2009

Plaats en datum van verklaring: [5]

Naam en handtekening van de bevoegde persoon om de verklaring op te stellen: [6]

Naam en adres van de geautoriseerde persoon om het technisch dossier samen te stellen:

Benedikt von Riedesel
Algemeen directeur, MacDon Europe GmbH
Hagenauer Straße 59
65203 Wiesbaden (Duitsland)
bvonriedesel@macdon.com

PO

My niżej podpisani, [1]

Oświadczamy, że produkt:

Typ urządzenia: [2]

Nazwa i model: [3]

Numer seryjny/numery seryjne: [4]

spełnia wszystkie odpowiednie przepisy dyrektywy 2006/42/WE.

Zastosowaliśmy następujące (zharmonizowane) normy zgodnie z artykułem 7(2):

EN ISO 4254-1:2013

EN ISO 4254-7:2009

Data i miejsce oświadczenia: [5]

Imię i nazwisko oraz podpis osoby upoważnionej do przygotowania deklaracji: [6]

Imię i nazwisko oraz adres osoby upoważnionej do przygotowania dokumentacji technicznej:

Benedikt von Riedesel
Dyrektor generalny, MacDon Europe GmbH
Hagenauer Straße 59
65203 Wiesbaden (Niemcy)
bvonriedesel@macdon.com

PT

Nós, [1]

Declaramos, que o produto:

Tipo de máquina: [2]

Nome e Modelo: [3]

Número(s) de Série: [4]

cumpre todas as disposições relevantes da Directiva 2006/42/CE.

Normas harmonizadas aplicadas, conforme referido no Artigo 7(2):

EN ISO 4254-1:2013

EN ISO 4254-7:2009

Local e data da declaração: [5]

Identidade e assinatura da pessoa autorizada a elaborar a declaração: [6]

Nome e endereço da pessoa autorizada a compilar o ficheiro técnico:

Benedikt von Riedesel
Gerente Geral, MacDon Europa Ltda.
Hagenauer Straße 59
65203 Wiesbaden (Alemanha)
bvonriedesel@macdon.com

RO

Noi, [1]

Declarăm, că următorul produs:

Tipul mașinii: [2]

Denumirea și modelul: [3]

Număr (numere) serie: [4]

corespunde tuturor dispozițiilor esențiale ale directivei 2006/42/EC.

Au fost aplicate următoarele standarde armonizate conform articolului 7(2):

EN ISO 4254-1:2013

EN ISO 4254-7:2009

Data și locul declarației: [5]

Identitatea și semnătura persoanei împuternicite pentru întocmirea declarației: [6]

Numele și semnătura persoanei autorizate pentru întocmirea cărții tehnice:

Benedikt von Riedesel
Manager General, MacDon Europe GmbH
Hagenauer Straße 59
65203 Wiesbaden (Germania)
bvonriedesel@macdon.com

SR

Mi, [1]

Izjavljujemo da proizvod

Tip mašine: [2]

Naziv i model: [3]

Serijski broj(evi): [4]

Ispunjava sve relevantne odredbe direktive 2006/42/EC.

Korišæeni su usklađeni standardi kao što je navedeno u èlanu 7(2):

EN ISO 4254-1:2013

EN ISO 4254-7:2009

Datum i mesto izdavanja deklaracije: [5]

Identitet i potpis lica ovlašæenog za sastavljanje deklaracije: [6]

Ime i adresa osobe ovlašæene za sastavljanje tehnièke datoteke:

Benedikt von Riedesel
Generalni direktor, MacDon Europe GmbH
Hagenauer Straße 59
65203 Wiesbaden (Nemačka)
bvonriedesel@macdon.com

SV

Vi, [1]

Intygar att produkten:

Maskintyp: [2]

Namn och modell: [3]

Serienummer: [4]

uppfyller alla relevanta villkor i direktivet 2006/42/EG.

Harmonierade standarder används, såsom anges i artikel 7(2):

EN ISO 4254-1:2013

EN ISO 4254-7:2009

Plats och datum för intyget: [5]

Identitet och signatur för person med befogenhet att upprätta intyget: [6]

Namn och adress för person behörig att upprätta den tekniska dokumentationen:

Benedikt von Riedesel
Administrativ chef, MacDon Europe GmbH
Hagenauer Straße 59
65203 Wiesbaden (Tyskland)
bvonriedesel@macdon.com

SL

Mi, [1]

izjavljamo, da izdelek:

Vrsta stroja: [2]

Ime in model: [3]

Serijska/-e številka/-e: [4]

ustreza vsem zadevnim določbam Direktive 2006/42/ES.

Uporabljeni usklajeni standardi, kot je navedeno v členu 7(2):

EN ISO 4254-1:2013

EN ISO 4254-7:2009

Kraj in datum izjave: [5]

Istovetnost in podpis osebe, opolnomočene za pripravo izjave: [6]

Ime in naslov osebe, pooblaščene za pripravo tehnične datoteke:

Benedikt von Riedesel
Generalni direktor, MacDon Europe GmbH
Hagenauer Straße 59
65203 Wiesbaden (Nemčija)
bvonriedesel@macdon.com

SK

My, [1]

týmto prehlasujeme, že tento výrobok:

Typ zariadenia: [2]

Názov a model: [3]

Výrobné číslo: [4]

spĺňa príslušné ustanovenia a základné požiadavky smernice č. 2006/42/ES.

Použité harmonizované normy, ktoré sa uvádzajú v Článku č. 7(2):

EN ISO 4254-1:2013

EN ISO 4254-7:2009

Miesto a dátum prehlásenia: [5]

Meno a podpis osoby oprávnenej vypracovať toto prehlásenie: [6]

Meno a adresa osoby oprávnenej zostaviť technický súbor:

Benedikt von Riedesel
Generálny riaditeľ MacDon Europe GmbH
Hagenauer Straße 59
65203 Wiesbaden (Nemecko)
bvonriedesel@macdon.com

1026044

Introduction

This instructional manual contains information on the D1 Series Draper Header and the FM100 Float Module. It must be used in conjunction with the combine operator's manual. The FM100 Float Module is used to attach a D1 Series Draper Header to a combine.

The D1 Series Draper Header is specially designed as a straight cut header and is equipped to work well in all straight cut conditions—whether cutting on or above the ground.

Carefully read all the material provided before attempting to use the machine.

Use this manual as your first source of information about the machine. If you follow the instructions provided, your header will work well for many years.

MacDon provides warranty for Customers who operate and maintain their equipment as described in this manual. A copy of the MacDon Industries Limited Warranty Policy, which explains this warranty, should have been provided to you by your Dealer. Damage resulting from any of the following conditions will void the warranty:

- Accident
- Misuse
- Abuse
- Improper maintenance or neglect
- Abnormal or extraordinary use of the machine
- Failure to use the machine, equipment, component, or part in accordance with the manufacturer’s instructions

The following conventions are used in this document:

- Right and left are determined from the operator’s position. The front of the header faces the crop; the back of the header attaches to the float module and combine.
- Unless otherwise noted, use the standard torque values provided in Chapter *8.1 Torque Specifications, page 653*.

When setting up the machine or making adjustments, review and follow the recommended machine settings in all relevant MacDon publications. Failure to do so may compromise machine function and machine life and may result in a hazardous situation.

The Table of Contents and Index will guide you to specific areas of this manual. Study the Table of Contents to familiarize yourself with how the information is organized.

Keep this manual handy for frequent reference and to pass on to new Operators or Owners. A manual storage case (A) is located inside the header left endshield.

Call your MacDon Dealer if you need assistance, information, or additional copies of this manual.

NOTE:

Keep your MacDon publications up-to-date. The most current version can be downloaded from our website (*www.macdon.com*) or from our Dealer-only site (*https://portal.macdon.com*) (login required).

This document is available in English, French, Portuguese, and Russian.

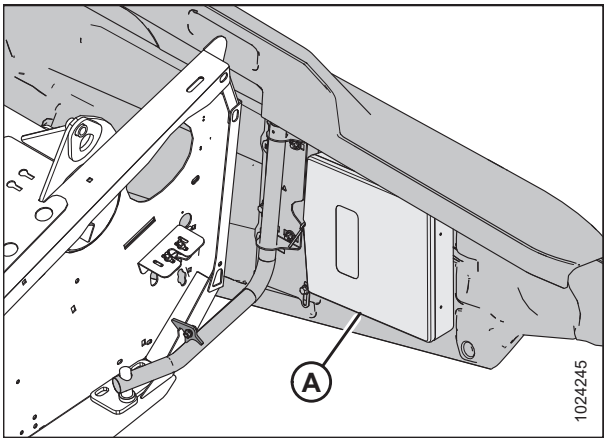

Manual Storage Location

Summary of Changes

At MacDon, we're continuously making improvements; occasionally these improvements affect product documentation. The following list provides an account of major changes from the previous version of this document.

Section	Summary of Change	Internal Use Only
1.7 Safety Decal Locations, page 8	Updated decal illustration for FM100.	ECN 58655
1.7 Safety Decal Locations, page 8	Added D115 information.	Tech Pubs
1.8 Understanding Safety Signs, page 17	Updated illustration for decal MD #113482.	Tech Pubs
1.8 Understanding Safety Signs, page 17	Added new decal (MD #304865) for model year 2020.	ECN 58722
2.2 Specifications, page 25	Added D115 information to topic tables.	Engineering
2.3.2 FM100 Float Module, page 30	Updated illustrations.	Tech Pubs
3.8.1 FM100 Feed Auger Configurations, page 62	Added Ultra Wide auger flighting configuration to topic.	Engineering, Tech Pubs
Converting from Medium Configuration to Wide Configuration or Ultra Wide Configuration, page 76	Added content per Ultra Wide flighting configuration	Engineering, Tech Pubs
Converting from Ultra Narrow or Narrow Configuration to Wide or Ultra Wide Configuration, page 78	Added content per Ultra Wide flighting configuration	Engineering, Tech Pubs
Converting from Wide Configuration to Ultra Wide Configuration, page 80	Added content per Ultra Wide flighting configuration	Engineering, Tech Pubs
3.8.1 FM100 Feed Auger Configurations, page 62	Added CLAAS 8000 to list of compatible combines for wide auger flighting configuration.	Engineering
3.8.1 FM100 Feed Auger Configurations, page 62	Added AGCO IDEAL™ Series to list of compatible combines for narrow auger flighting configuration.	ECN 59301
Adjusting Header Angle from Combine, page 103	Added IMPORTANT note to topic.	Engineering
Checking and Adjusting Reel Height Sensor, page 118	Updated reel height sensor voltage limits table to include AGCO IDEAL™ Series information.	ECN 58283
Repositioning Fore-Aft Cylinders on Single Reel, page 124	Updated illustrations for clarity.	Tech Pubs
Repositioning Fore-Aft Cylinders on Double Reel, page 126	Updated illustrations for clarity.	Tech Pubs
3.9.2 Troubleshooting Auto Header Height / Float Indicator, page 150	Added new topic.	Tech Pubs, Product Support
3.9.4 AGCO IDEAL™ Series Combines, page 163	Added new topic.	Engineering
Setting up the Header – AGCO IDEAL™ Series, page 163	Added new topic.	Engineering
Setting Minimum Reel Speed and Calibrating Reel – AGCO IDEAL™ Series, page 168	Added new topic.	Engineering

Section	Summary of Change	Internal Use Only
Setting up Automatic Header Controls – AGCO IDEAL™ Series, page 170	Added new topic.	Engineering
Calibrating the Header – AGCO IDEAL™ Series, page 171	Added new topic.	Engineering
Operating the Header – AGCO IDEAL™ Series, page 174	Added new topic.	Engineering
Reviewing Header In-Field Settings – AGCO IDEAL™ Series, page 176	Added new topic.	Engineering
3.9.11 CLAAS 8000/7000 Series Combines, page 236	Added new topic.	Engineering
Setting up the Header – CLAAS 8000/7000 Series, page 236	Added new topic.	Engineering
Calibrating the Auto Header Height Control – CLAAS 8000/7000 Series, page 238	Added new topic.	Engineering
Setting Cut and Reel Height Preset – CLAAS 8000/7000 Series, page 241	Added new topic.	Engineering
Setting the Sensitivity of the Auto Header Height Control – CLAAS 8000/7000 Series, page 242	Added new topic.	Engineering
Adjusting Auto Reel Speed – CLAAS 8000/7000 Series, page 244	Added new topic.	Engineering
Calibrating Reel Height Sensor – CLAAS 8000/7000 Series, page 245	Added new topic.	Engineering
4.1.2 Using Stripper Bars, page 371	Removed irrelevant statement about cereal crops.	Engineering
4.4 AGCO IDEAL™ Series Combines, page 388	Added new topic.	Engineering
4.4.1 Attaching Header to an AGCO IDEAL™ Series Combine, page 388	Added new topic.	ECN 57194
4.4.2 Detaching Header from an AGCO IDEAL™ Series Combine, page 391	Added new topic.	ECN 57194
4.6.1 Attaching Header to CLAAS Combine, page 401	Updated illustration for clarity.	Tech Pubs
5.3.1 Maintenance Schedule/Record, page 432	Updated maintenance schedule/record to include task for checking link holder hooks as part of regular machine inspection and maintenance.	Product Support
5.4.2 Adding Oil to Hydraulic Reservoir, page 455	Updated illustration.	Tech Pubs
5.4.3 Changing Oil in Hydraulic Reservoir, page 455	Updated procedure steps and illustrations.	ECN 57856
5.4.3 Changing Oil in Hydraulic Reservoir, page 455	Updated oil amount from 75 liters (20 gallons) to 80 liters (22.5 gallons).	Engineering

Section	Summary of Change	Internal Use Only
5.7.3 Adjusting Auger Drive Chain Tension, page 470	Updated procedure step to include precise deflection measurement and to include AGCO IDEAL™ Series information in table.	Engineering
Installing Split Finger Holder, page 480	Added step for inspecting finger prior to installation.	Engineering
5.10.7 Checking Link Holder Hooks, page 545	Added new topic.	Product Support
6.5.5 Draper Clips, page 638	Updated option information (name, cleat specifics per draper part number).	ECN 58960
Inside back cover	Updated hydraulic oil specification with detailed descriptions of generic as well as name brand products.	Engineering, Tech Pubs

Model and Serial Number

Record the model number, serial number, and model year of the header, combine float module, and transport / stabilizer wheel option (if installed) in the spaces provided.

NOTE:

Right and left designations are determined from the operator's position, facing forward.

D1 Series Draper Header

Header Model: _____

Serial Number: _____

Year: _____

Header serial number plate (A) is located on the upper corner on the left endsheet.

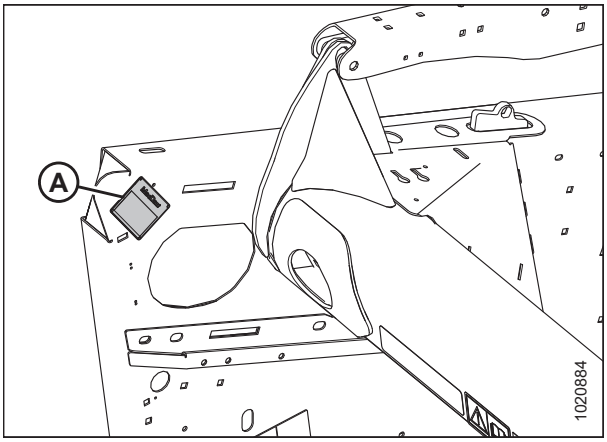

Figure 1: Header Serial Number Plate Location

FM100 Float Module for Combine

Serial Number: _____

Year: _____

Float module serial number plate (A) is located on the top left of the float module frame.

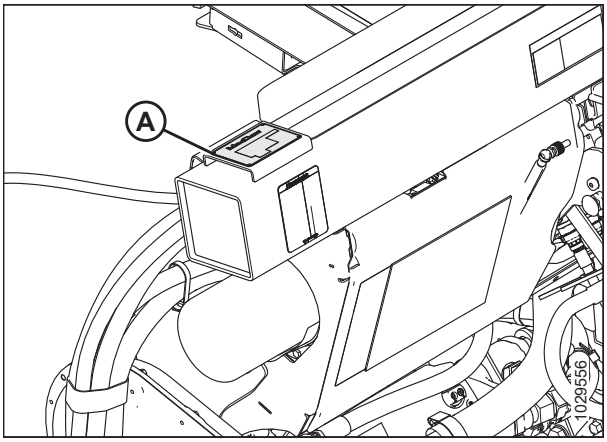

Figure 2: Float Module Serial Number Plate Location

Slow Speed Transport / Stabilizer Wheel Option

Serial Number: _____

Year: _____

Transport serial number plate (A) is located on the right axle assembly.

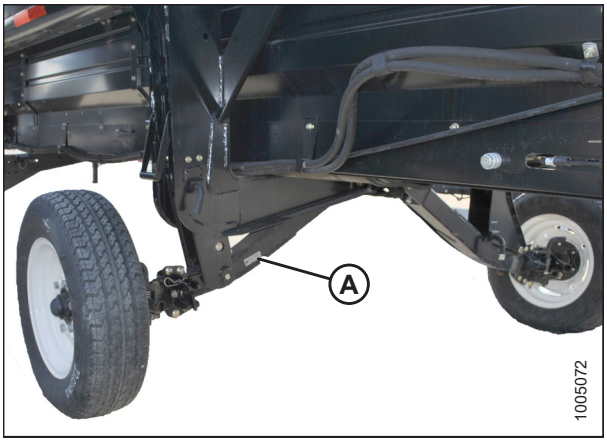

Figure 3: Slow Speed Transport / Stabilizer Wheel

Declaration of Conformity i
Introduction v
Summary of Changes vi
Model and Serial Number ix

Chapter 1: Safety 1

1.1 Safety Alert Symbols 1
1.2 Signal Words 2
1.3 General Safety 3
1.4 Maintenance Safety 5
1.5 Hydraulic Safety 6
1.6 Safety Signs 7
1.6.1 Installing Safety Decals 7
1.7 Safety Decal Locations 8
1.8 Understanding Safety Signs 17

Chapter 2: Product Overview 23

2.1 Definitions 23
2.2 Specifications 25
2.3 Component Identification 29
2.3.1 D1 Series Draper Header for Combines 29
2.3.2 FM100 Float Module 30

Chapter 3: Operation 33

3.1 Owner/Operator Responsibilities 33
3.2 Operational Safety 34
3.2.1 Header Safety Props 34
3.2.2 Reel Safety Props 35
Engaging Reel Safety Props 35
Disengaging Reel Safety Props 36
3.2.3 Header Endshields 37
Opening Endshields 37
Closing Endshields 38
Removing Endshields 38
Installing Endshields 39
Checking and Adjusting Endshields 40
3.3 Daily Start-Up Check 42
3.4 Break-in Period 43
3.5 Shutting down the Combine 44
3.6 Cab Controls 45
3.7 Header Setup 46
3.7.1 Header Attachments 46
3.7.2 Header Settings 46
3.7.3 Optimizing Header for Straight Combining Canola 57

Checking and Adjusting Feed Auger Springs 58
3.7.4 Reel Settings 59
3.8 Header Operating Variables 61
3.8.1 FM100 Feed Auger Configurations 62
Converting from Ultra Narrow Configuration or Narrow Configuration to Medium Configuration 67
Converting from Wide Configuration to Medium Configuration 70
Converting from Medium Configuration or Wide Configuration to Narrow Configuration 72
Converting from Ultra Narrow Configuration to Narrow Configuration 75
Converting from Medium Configuration to Wide Configuration or Ultra Wide Configuration 76
Converting from Ultra Narrow or Narrow Configuration to Wide or Ultra Wide Configuration 78
Converting from Wide Configuration to Ultra Wide Configuration 80
Converting from Medium Configuration or Wide Configuration to Ultra Narrow Configuration 81
Converting from Narrow Configuration to Ultra Narrow Configuration 85
3.8.2 Cutting Height 87
Cutting off the Ground 87
Cutting on the Ground 92
3.8.3 Header Float 94
Checking and Adjusting Header Float 95
Locking/Unlocking Header Float 100
3.8.4 Header Angle 101
Adjusting Header Angle from Combine 103
3.8.5 Reel Speed 109
Optional Reel Drive Sprockets 110
3.8.6 Ground Speed 111
3.8.7 Draper Speed 112
Adjusting Side Draper Speed 112
Feed Draper Speed 114
3.8.8 Knife Speed Information 114
Checking Knife Speed 116
3.8.9 Reel Height 117
Checking and Adjusting Reel Height Sensor 118
Replacing Reel Height Sensor 121
3.8.10 Reel Fore-Aft Position 123
Adjusting Reel Fore-Aft Position 123
Repositioning Fore-Aft Cylinders on Single Reel 124
Repositioning Fore-Aft Cylinders on Double Reel 126
Repositioning Fore-Aft Cylinders with Multi-Crop Rapid Reel Conversion Option 129
Repositioning Fore-Aft Cylinders on European-Configured Headers 132
3.8.11 Reel Tine Pitch 136
Reel Cam Settings 136
Adjusting Reel Cam 138
3.8.12 Crop Dividers 139
Removing Crop Dividers with Latch Option from Header 139
Removing Crop Dividers without Latch Option from Header 140
Installing Crop Dividers with Latch Option onto Header 141
Installing Crop Dividers without Latch Option onto Header 143
3.8.13 Crop Divider Rods 144
Removing Crop Divider Rods 144
Installing Crop Divider Rods 145
Rice Divider Rods 146
3.8.14 Setting Auger Position 146

3.9 Auto Header Height Control 148
3.9.1 Sensor Operation 149
3.9.2 Troubleshooting Auto Header Height / Float Indicator 150
3.9.3 Sensor Output Voltage Range – Combine Requirements 151
10 Volt Adapter (MD #B6421) – New Holland Combines Only 152
Manually Checking Voltage Range – One-Sensor System 153
Manually Checking Voltage Range – Two-Sensor System 155
Adjusting Voltage Limits – One-Sensor System 159
Adjusting Voltage Limits – Two-Sensor System 160
3.9.4 AGCO IDEAL™ Series Combines 163
Setting up the Header – AGCO IDEAL™ Series 163
Setting Minimum Reel Speed and Calibrating Reel – AGCO IDEAL™ Series 168
Setting up Automatic Header Controls – AGCO IDEAL™ Series 170
Calibrating the Header – AGCO IDEAL™ Series 171
Operating the Header – AGCO IDEAL™ Series 174
Reviewing Header In-Field Settings – AGCO IDEAL™ Series 176
3.9.5 Case IH 5088/6088/7088 Combines 177
Calibrating the Auto Header Height Control – Case IH 5088/6088/7088 177
Setting the Sensitivity of the Auto Header Height – Case IH 5088/6088/7088 179
3.9.6 Case IH 130 and 140 Series Mid-Range Combines 180
Setting up the Header on the Combine Display – Case IH 5130/6130/7130; 5140/6140/7140 180
Checking Voltage Range from Combine Cab – Case IH 5130/6130/7130; 5140/6140/7140 183
Calibrating Auto Header Height Control – Case IH 5130/6130/7130, 5140/6140/7140 185
Setting Preset Cutting Height – Case 5130/6130/7130, 5140/6140/7140 186
3.9.7 Case IH 7010/8010, 120, 230, 240, and 250 Series Combines 189
Checking Voltage Range from the Combine Cab – Case IH 8010 189
Setting Header Controls – Case IH 8010 192
Checking Voltage Range from the Combine Cab – Case IH 7010/8010, 120, 230, 240, and 250 Series Combines 193
Calibrating the Auto Header Height Control – Case IH 7010/8010,120, 230, 240, and 250 Series Combines 196
Calibrating the Auto Header Height Control – Case IH Combines with Version 28.00 or Higher Software 199
Checking Reel Height Sensor Voltages – Case IH Combines 204
Setting Preset Cutting Height – Case IH 7010/8010, 120, 230, 240, and 250 Series Combines 205
3.9.8 Challenger and Massey Ferguson 6 and 7 Series Combines 207
Checking Voltage Range from the Combine Cab – Challenger and Massey Ferguson 207
Engaging the Auto Header Height Control – Challenger and Massey Ferguson 209
Calibrating the Auto Header Height Control – Challenger and Massey Ferguson 210
Adjusting the Header Height – Challenger and Massey Ferguson 212
Adjusting the Header Raise/Lower Rate – Challenger and Massey Ferguson 213
Setting the Sensitivity of the Auto Header Height Control – Challenger and Massey Ferguson 214
3.9.9 CLAAS 500 Series Combines 215
Calibrating the Auto Header Height Control – CLAAS 500 Series 215
Setting Cutting Height – CLAAS 500 Series 217
Setting the Sensitivity of the Auto Header Height Control – CLAAS 500 Series 219
Adjusting Auto Reel Speed – CLAAS 500 Series 222
3.9.10 CLAAS 600 and 700 Series Combines 225
Calibrating the Auto Header Height Control – CLAAS 600 and 700 Series 225
Setting Cutting Height – CLAAS 600 and 700 Series 228
Setting the Sensitivity of the Auto Header Height Control – CLAAS 600 and 700 Series 229
Adjusting Auto Reel Speed – CLAAS 600 and 700 Series 231

Calibrating Reel Height Sensor – CLAAS 600 and 700 Series 232
Adjusting Auto Reel Height – CLAAS 600 and 700 Series 235
3.9.11 CLAAS 8000/7000 Series Combines 236
Setting up the Header – CLAAS 8000/7000 Series 236
Calibrating the Auto Header Height Control – CLAAS 8000/7000 Series 238
Setting Cut and Reel Height Preset – CLAAS 8000/7000 Series 241
Setting the Sensitivity of the Auto Header Height Control – CLAAS 8000/7000 Series 242
Adjusting Auto Reel Speed – CLAAS 8000/7000 Series 244
Calibrating Reel Height Sensor – CLAAS 8000/7000 Series 245
3.9.12 Gleaner R65/R66/R75/R76 and S Series Combines 248
Checking Voltage Range from the Combine Cab – Gleaner R65/R66/R75/R76 and Pre-2016 S Series 248
Engaging the Auto Header Height Control – Gleaner R65/R66/R75/R76 and Pre-2016 S Series 250
Calibrating the Auto Header Height Control – Gleaner R65/R66/R75/R76 and Pre-2016 S Series 252
Turning off the Accumulator – Gleaner R65/R66/R75/R76 and Pre-2016 S Series 254
Adjusting the Header Raise/Lower Rate – Gleaner R65/R66/R75/R76 and Pre-2016 S Series 255
Adjusting Ground Pressure – Gleaner R65/R66/R75/R76 and Pre-2016 S Series 256
Adjusting the Sensitivity of the Auto Header Height Control – Gleaner R65/R66/R75/R76 and Pre-2016 S Series 257
Troubleshooting Alarms and Diagnostic Faults – Gleaner R65/R66/R75/R76 and Pre-2016 S Series 258
3.9.13 Gleaner S9 Series Combines 260
Setting up the Header – Gleaner S9 Series 260
Setting Minimum Reel Speed and Calibrating Reel – Gleaner S9 Series 265
Setting up Automatic Header Controls – Gleaner S9 Series 267
Calibrating the Header – Gleaner S9 Series 269
Operating the Header – Gleaner S9 Series 273
Reviewing Header In-Field Settings – Gleaner S9 Series 274
3.9.14 John Deere 60 Series Combines 275
Checking Voltage Range from the Combine Cab – John Deere 60 Series 275
Calibrating the Auto Header Height Control – John Deere 60 Series 277
Turning the Accumulator Off – John Deere 60 Series 279
Setting the Sensing Grain Header Height to 50 – John Deere 60 Series 279
Setting the Sensitivity of the Auto Header Height Control – John Deere 60 Series 280
Adjusting the Threshold for the Drop Rate Valve – John Deere 60 Series 281
3.9.15 John Deere 70 Series Combines 282
Checking Voltage Range from the Combine Cab – John Deere 70 Series 282
Calibrating Feeder House Speed – John Deere 70 Series 285
Calibrating the Auto Header Height Control – John Deere 70 Series 285
Setting the Sensitivity of the Auto Header Height Control – John Deere 70 Series 287
Adjusting the Manual Header Raise/Lower Rate – John Deere 70 Series 288
3.9.16 John Deere S and T Series Combines 289
Checking Voltage Range from the Combine Cab – John Deere S and T Series 289
Calibrating the Auto Header Height Control – John Deere S and T Series 292
Setting the Sensitivity of the Auto Header Height Control – John Deere S and T Series 295
Adjusting the Manual Header Raise/Lower Rate – John Deere S and T Series 296
Setting Preset Cutting Height – John Deere S and T Series 297
Calibrating Feeder House Fore-Aft Tilt Range – John Deere S and T Series 300
Checking Reel Height Sensor Voltages – John Deere S and T Series 303
Calibrating Reel Height Sensor – John Deere S and T Series 306
3.9.17 John Deere S7 Series Combines 308
Setting up Header – John Deere S7 Series 308
Checking Voltage Range from the Combine Cab – John Deere S7 Series 312

Calibrating Feeder House – John Deere S7 Series 315
Calibrating Header – John Deere S7 Series 317
3.9.18 New Holland Combines – CR/CX Series – 2014 and Prior 320
Checking Voltage Range from the Combine Cab – New Holland CR/CX Series 320
Setting up Auto Header Height Control – New Holland CR/CX Series 324
Calibrating the Auto Header Height Control – New Holland CR/CX Series 325
Calibrating Maximum Stubble Height – New Holland CR/CX Series 327
Adjusting Header Raise Rate – New Holland CR/CX Series 328
Setting the Header Lower Rate – New Holland CR/CX Series 329
Setting the Sensitivity of the Auto Header Height Control – New Holland CR/CX Series 330
Setting Preset Cutting Height – New Holland CR/CX Series 331
3.9.19 New Holland Combines – CR Series – 2015 and Later 332
Checking Voltage Range from the Combine Cab – New Holland CR Series 332
Setting up Auto Header Height Control – New Holland CR Series 335
Calibrating the Auto Header Height Control – New Holland CR Series 339
Checking Reel Height Sensor Voltages – New Holland CR Series 342
Setting Preset Cutting Height – New Holland CR Series 343
Setting Maximum Work Height – New Holland CR Series 345
Configuring Reel Fore-Aft, Header Tilt, and Header Type – New Holland CR Series 346
3.10 Leveling the Header 348
3.11 Unplugging the Cutterbar 350
3.12 Unplugging the FM100 351
3.13 Upper Cross Auger 352
3.13.1 Removing Upper Cross Auger Flighting 352
3.13.2 Installing Upper Cross Auger Flighting 353
3.14 Transporting the Header 354
3.14.1 Transporting Header on Combine 354
3.14.2 Towing 355
Attaching Header to Towing Vehicle 355
Towing the Header 355
3.14.3 Converting from Transport to Field Position 356
Removing Tow-Bar 356
Storing the Tow-Bar 357
Moving Front (Left) Wheels into Field Position 359
Moving Rear (Right) Wheels into Field Position 360
3.14.4 Converting from Field to Transport Position 362
Moving Front (Left) Wheels into Transport Position 362
Moving Rear (Right) Wheels into Transport Position 364
Attaching Tow-Bar 367
3.15 Storing the Header 370

Chapter 4: Header Attachment/Detachment 371

4.1 FM100 Setup 371
4.1.1 Using Auger Flighting 371
4.1.2 Using Stripper Bars 371
4.2 Case IH Combines 372
4.2.1 Attaching Header to Case IH Combine 372
4.2.2 Detaching Header from Case IH Combine 377

4.3 AGCO (Challenger, Gleaner, and Massey Ferguson) Combines 380
4.3.1 Attaching Header to an AGCO (Challenger, Gleaner, or Massey Ferguson) Combine 380
4.3.2 Detaching Header from a Challenger, Gleaner, or Massey Ferguson Combine 385
4.4 AGCO IDEAL™ Series Combines 388
4.4.1 Attaching Header to an AGCO IDEAL™ Series Combine 388
4.4.2 Detaching Header from an AGCO IDEAL™ Series Combine 391
4.5 John Deere Combines 394
4.5.1 Attaching Header to John Deere Combine 394
4.5.2 Detaching Header from John Deere Combine 398
4.6 CLAAS Combines 401
4.6.1 Attaching Header to CLAAS Combine 401
4.6.2 Detaching Header from CLAAS Combine 405
4.7 New Holland Combines 408
4.7.1 Attaching Header to New Holland CR/CX Combine 408
4.7.2 Detaching Header from New Holland CR/CX Combine 412
4.7.3 CR Feeder Deflectors 416
4.8 Attaching and Detaching Header to and from FM100 Float Module 417
4.8.1 Attaching Header to FM100 Float Module 417
4.8.2 Detaching Header from FM100 Float Module 423

Chapter 5: Maintenance and Servicing 429

5.1 Preparing Machine for Servicing 429
5.2 Maintenance Specifications 430
5.2.1 Installing a Sealed Bearing 430
5.3 Maintenance Requirements 431
5.3.1 Maintenance Schedule/Record 432
5.3.2 Break-In Inspection 435
5.3.3 Preseason Servicing 435
5.3.4 End-of-Season Service 436
5.3.5 Checking Hydraulic Hoses and Lines 437
5.3.6 Lubrication and Servicing 438
Service Intervals 438
Greasing Procedure 446
Lubricating Reel Drive Chain – Double Reel 448
Lubricating Auger Drive Chain 450
Lubricating Header Drive Gearbox 451
5.4 Hydraulics 454
5.4.1 Checking Oil Level in Hydraulic Reservoir 454
5.4.2 Adding Oil to Hydraulic Reservoir 455
5.4.3 Changing Oil in Hydraulic Reservoir 455
5.4.4 Changing Oil Filter 457
5.5 Electrical System 458
5.5.1 Replacing Light Bulbs 458
5.6 Header Drive 459

5.6.1 Removing Driveline 459
5.6.2 Installing Driveline 460
5.6.3 Removing Driveline Guard 461
5.6.4 Installing Driveline Guard 463
5.6.5 Adjusting Gearbox Drive Chain Tension 465
5.7 Auger 466
5.7.1 Adjusting Auger to Pan Clearance 466
5.7.2 Checking Auger Drive Chain Tension 468
5.7.3 Adjusting Auger Drive Chain Tension 470
5.7.4 Installing Auger Drive Chain 471
5.7.5 Auger Fingers 474
Removing Feed Auger Fingers 474
Installing Feed Auger Fingers 476
Replacing Broken Finger Holder 479
Replacing Feed Auger Finger Guides 483
Checking Auger Finger Timing 484
Adjusting Auger Finger Timing 485
Using Auger Flighting 486
5.8 Knife 487
5.8.1 Replacing Knife Section 488
5.8.2 Removing Knife 489
5.8.3 Removing Knifehead Bearing 490
5.8.4 Installing Knifehead Bearing 490
5.8.5 Installing Knife 491
5.8.6 Spare Knife 492
5.8.7 Knife Guards 493
Adjusting Pointed Knife Guards 493
Replacing Pointed Guards 494
Replacing Stub Guards 495
Checking Knife Hold-Downs 496
5.8.8 Knifehead Shield 499
Installing Knifehead Shield 499
5.9 Knife Drive System 500
5.9.1 Knife Drive Box 500
Checking Knife Drive Box 500
Checking Mounting Bolts 502
Removing Knife Drive Box 502
Removing Knife Drive Box Pulley 505
Installing Knife Drive Box Pulley 505
Installing Knife Drive Box 506
Changing Oil in Knife Drive Box 509
5.9.2 Knife Drive Belts 510
Non-Timed Knife Drive Belts 510
Timed Double-Knife Drive Belts 514
5.10 Feed Draper 527
5.10.1 Replacing Feed Draper 527
5.10.2 Checking and Adjusting Feed Draper Tension 530
5.10.3 Feed Draper Drive Roller 531

Removing Feed Draper Drive Roller 531
Installing Feed Draper Drive Roller 533
Replacing Feed Draper Drive Roller Bearing 534
5.10.4 Feed Draper Idler Roller 537
Removing Feed Draper Idler Roller 537
Replacing Feed Draper Idler Roller Bearing 538
Installing Feed Draper Idler Roller 541
5.10.5 Lowering FM100 Feed Deck Pan 542
5.10.6 Raising FM100 Feed Deck Pan 544
5.10.7 Checking Link Holder Hooks 545
5.11 FM100 Stripper Bars and Feed Deflectors 547
5.11.1 Removing Stripper Bars 547
5.11.2 Installing Stripper Bars 548
5.11.3 Replacing Feed Deflectors on New Holland CR Combines 549
5.11.4 Replacing Feed Deflectors on Gleaner Combines 550
5.12 Header Side Drapers 554
5.12.1 Removing Side Drapers 554
5.12.2 Installing Side Drapers 555
5.12.3 Adjusting Draper Tension 557
5.12.4 Adjusting Side Draper Tracking 559
5.12.5 Adjusting Deck Height 560
5.12.6 Draper Roller Maintenance 563
Inspecting Draper Roller Bearing 563
Draper Deck Idler Roller 563
Draper Deck Drive Roller 566
5.12.7 Draper Deflectors 571
Removing Narrow Draper Deflectors 571
Installing Narrow Draper Deflectors 572
5.13 Reel 573
5.13.1 Reel Clearance to Cutterbar 573
Measuring Reel Clearance 574
Adjusting Reel Clearance 576
5.13.2 Reel Frown 577
Adjusting Reel Frown 577
5.13.3 Centering the Reel 578
Centering Reel on Double-Reel Header 578
Centering Reel on a Single-Reel Header 580
5.13.4 Reel Fingers 581
Removing Steel Fingers 581
Installing Steel Fingers 582
Removing Plastic Fingers 583
Installing Plastic Fingers 584
5.13.5 Tine Tube Bushings 585
Removing Bushings from Reels 585
Installing Bushings onto Reels 591
5.13.6 Reel Endshields 598
Replacing Reel Endshields 598
Replacing Reel Endshield Supports 600

5.14 Reel Drive 601
5.14.1 Reel Drive Cover 601
Removing Reel Drive Cover 601
Installing Reel Drive Cover 602
5.14.2 Reel Drive Chain Tension 604
Loosening Reel Drive Chain 604
Tightening Reel Drive Chain 604
5.14.3 Reel Drive Sprocket 606
Removing Reel Drive Sprocket 606
Installing Reel Drive Sprocket 607
5.14.4 Double-Reel Drive U-Joint 608
Removing Double-Reel Drive U-Joint 608
Installing Double-Reel U-Joint 609
5.14.5 Reel Drive Motor 610
Removing Reel Drive Motor 610
Installing Reel Drive Motor 610
5.14.6 Replacing Drive Chain on Double Reel 612
5.14.7 Replacing Single-Reel Header Drive Chain 614
5.14.8 Replacing Reel Speed Sensor 614
Replacing Challenger, Gleaner, and Massey Ferguson Reel Speed Sensor 615
Replacing John Deere Reel Speed Sensor 617
Replacing CLAAS 400 Series Reel Speed Sensor 617
Replacing CLAAS 500/700 Series Reel Speed Sensor 618
5.15 Transport System (Optional) 619
5.15.1 Checking Wheel Bolt Torque 619
5.15.2 Checking Axle Bolt Torque 620
5.15.3 Checking Tire Pressure 621

Chapter 6: Options and Attachments 623

6.1 FM100 Float Module 623
6.1.1 Hillside Extension Kit 623
6.2 Reel 624
6.2.1 Multi-Crop Rapid Reel Conversion Kit 624
6.2.2 Reel Arm Extension Kit – European-Configured Headers Only 624
6.2.3 Reel Arm Extension Kit – North American-Configured Headers Only 625
6.2.4 Lodged Crop Reel Finger Kit 625
6.2.5 PR15 Tine Tube Reel Conversion Kit 626
6.2.6 Reel Endshield Kit 626
6.2.7 Tine Tube Reinforcing Kit 627
6.3 Cutterbar 628
6.3.1 Cutterbar Wearplate 628
6.3.2 Knife Cutout Cover 628
6.3.3 Extended Center Filler 629
6.3.4 Rock Retarder 629
6.3.5 Stub Guard Conversion Kit 629
6.3.6 Vertical Knife Mount Kits 630
6.3.7 Vertical Knife Plumbing Kits 631

6.4 Header 632
6.4.1 Divider Quick Latch Kit 632
6.4.2 Stabilizer Wheels 632
6.4.3 Secondary Stabilizer Wheel 633
6.4.4 Stabilizer Wheels and Slow Speed Transport Package 633
6.4.5 Stubble Light Kit 633
6.4.6 Backsheet Extension Kit 634
6.4.7 Skid Shoe Kits 634
6.4.8 Steel Skid Shoes 635
6.5 Crop Delivery 636
6.5.1 FM100 Dual Auto Header Height Control Sensor Kit 636
6.5.2 FM100 Feed Auger Flighting 636
6.5.3 In-Cab Draper Speed Control Kit 637
6.5.4 Wide Draper Deflector 637
6.5.5 Draper Clips 638
6.5.6 Stripper Bars 638
6.5.7 Auger Dent Repair Kit 639
6.5.8 Upper Cross Auger 639
6.5.9 European Combine Upper Cross Auger 640
6.5.10 Rice Divider Rods 640
6.5.11 Full Interface Filler Kit 641

Chapter 7: Troubleshooting 643

7.1 Crop Loss 643
7.2 Cutting Action and Knife Components 645
7.3 Reel Delivery 648
7.4 Header and Drapers 651

Chapter 8: Reference 653

8.1 Torque Specifications 653
8.1.1 Metric Bolt Specifications 653
8.1.2 Metric Bolt Specifications Bolting into Cast Aluminum 655
8.1.3 Flare-Type Hydraulic Fittings 656
8.1.4 O-Ring Boss Hydraulic Fittings – Adjustable 657
8.1.5 O-Ring Boss Hydraulic Fittings – Non-Adjustable 659
8.1.6 O-Ring Face Seal Hydraulic Fittings 660
8.1.7 Tapered Pipe Thread Fittings 661
8.2 Conversion Chart 662

Index 663

Recommended Fluids and Lubricants 677

Chapter 1: Safety

1.1 Safety Alert Symbols

This safety alert symbol indicates important safety messages in this manual and on safety signs on the machine.

This symbol means:

- **ATTENTION!**
- **BECOME ALERT!**
- **YOUR SAFETY IS INVOLVED!**

Carefully read and follow the safety message accompanying this symbol.

Why is safety important to you?

- Accidents disable and kill
- Accidents cost
- Accidents can be avoided



Figure 1.1: Safety Symbol

1.2 Signal Words

Three signal words, **DANGER**, **WARNING**, and **CAUTION**, are used to alert you to hazardous situations. Two signal words, **IMPORTANT** and **NOTE**, identify non-safety related information. Signal words are selected using the following guidelines:

DANGER

Indicates an imminently hazardous situation that, if not avoided, will result in death or serious injury.

WARNING

Indicates a potentially hazardous situation that, if not avoided, could result in death or serious injury. It may also be used to alert against unsafe practices.

CAUTION

Indicates a potentially hazardous situation that, if not avoided, may result in minor or moderate injury. It may be used to alert against unsafe practices.

IMPORTANT:

Indicates a situation that, if not avoided, could result in a malfunction or damage to the machine.

NOTE:

Provides additional information or advice.

1.3 General Safety

CAUTION

The following general farm safety precautions should be part of your operating procedure for all types of machinery.

Protect yourself when assembling, operating, and servicing machinery, wear all protective clothing and personal safety devices that could be necessary for the job at hand. Do **NOT** take chances. You may need the following:

- Hard hat
- Protective footwear with slip-resistant soles
- Protective glasses or goggles
- Heavy gloves
- Wet weather gear
- Respirator or filter mask
- Be aware that exposure to loud noises can cause hearing impairment or loss. Wear suitable hearing protection devices such as earmuffs or earplugs to help protect against loud noises.

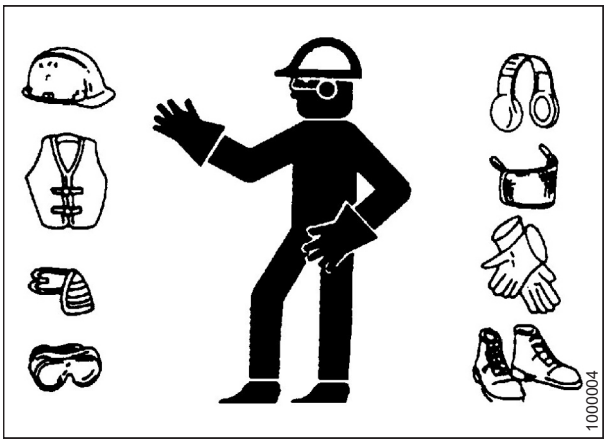

Figure 1.2: Safety Equipment

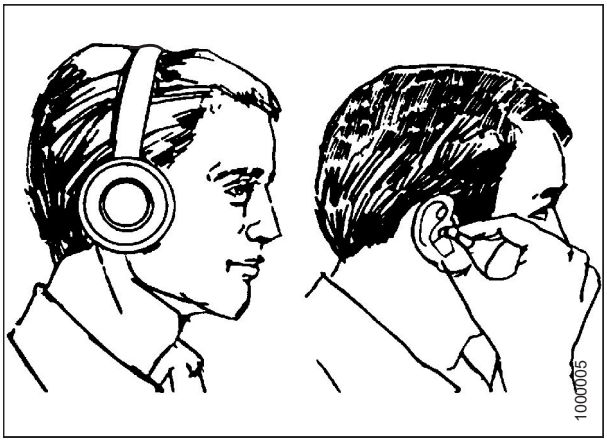

Figure 1.3: Safety Equipment

- Provide a first aid kit in case of emergencies.
- Keep a properly maintained fire extinguisher on the machine. Be familiar with its proper use.
- Keep young children away from machinery at all times.
- Be aware that accidents often happen when the Operator is tired or in a hurry. Take time to consider safest way. **NEVER** ignore warning signs of fatigue.

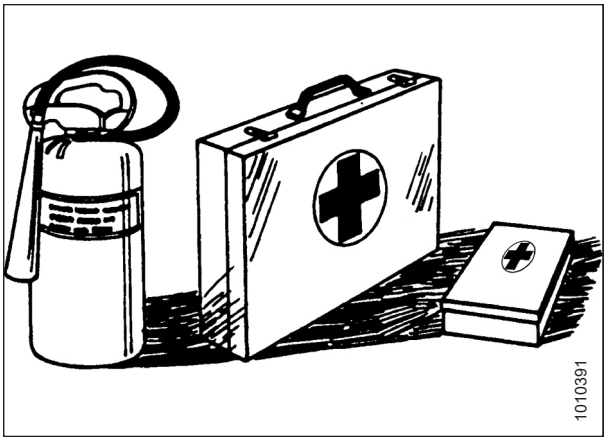

Figure 1.4: Safety Equipment

- Wear close-fitting clothing and cover long hair. **NEVER** wear dangling items such as scarves or bracelets.
- Keep all shields in place. **NEVER** alter or remove safety equipment. Make sure driveline guards can rotate independently of shaft and can telescope freely.
- Use only service and repair parts made or approved by equipment manufacturer. Substituted parts may not meet strength, design, or safety requirements.



Figure 1.5: Safety around Equipment

- Keep hands, feet, clothing, and hair away from moving parts. **NEVER** attempt to clear obstructions or objects from a machine while the engine is running.
- Do **NOT** modify the machine. Unauthorized modifications may impair machine function and/or safety. It may also shorten the machine's life.
- To avoid injury or death from unexpected startup of the machine, **ALWAYS** stop the engine and remove the key from the ignition before leaving the operator's seat for any reason.

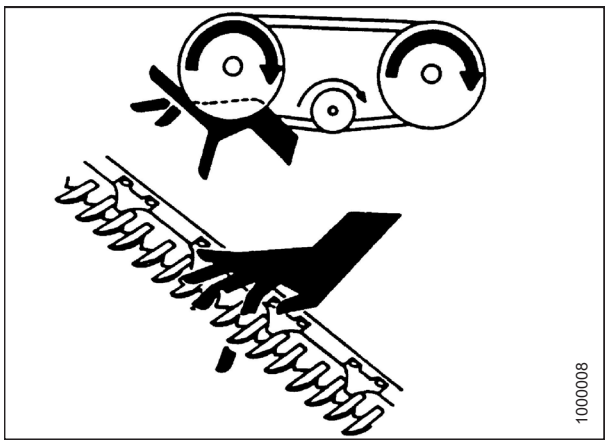

Figure 1.6: Safety around Equipment

- Keep service area clean and dry. Wet and/or oily floors are slippery. Wet spots can be dangerous when working with electrical equipment. Be sure all electrical outlets and tools are properly grounded.
- Keep work area well lit.
- Keep machinery clean. Straw and chaff on a hot engine are fire hazards. Do **NOT** allow oil or grease to accumulate on service platforms, ladders, or controls. Clean machines before storage.
- **NEVER** use gasoline, naphtha, or any volatile material for cleaning purposes. These materials may be toxic and/or flammable.
- When storing machinery, cover sharp or extending components to prevent injury from accidental contact.

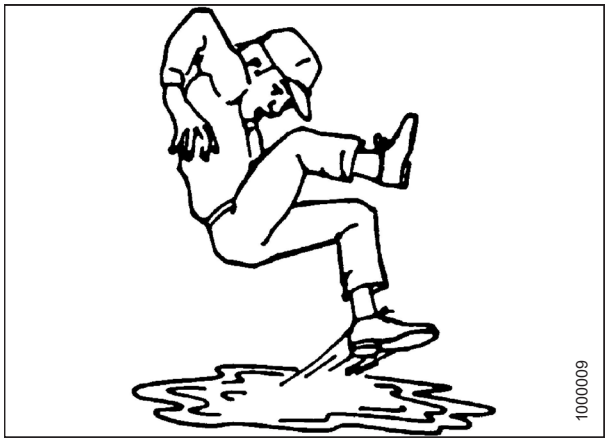

Figure 1.7: Safety around Equipment

1.4 Maintenance Safety

To ensure your safety while maintaining machine:

- Review the operator's manual and all safety items before operation and/or maintenance of the machine.
- Place all controls in Neutral, stop the engine, set the park brake, remove the ignition key, and wait for all moving parts to stop before servicing, adjusting, and/or repairing.
- Follow good shop practices:
  - Keep service areas clean and dry
  - Be sure electrical outlets and tools are properly grounded
  - Keep work area well lit



Figure 1.8: Safety around Equipment

- Relieve pressure from hydraulic circuits before servicing and/or disconnecting the machine.
- Make sure all components are tight and that steel lines, hoses, and couplings are in good condition before applying pressure to hydraulic systems.
- Keep hands, feet, clothing, and hair away from all moving and/or rotating parts.
- Clear the area of bystanders, especially children, when carrying out any maintenance, repairs, or adjustments.
- Install transport lock or place safety stands under the frame before working under the machine.
- If more than one person is servicing the machine at the same time, be aware that rotating a driveline or other mechanically-driven component by hand (for example, accessing a lubricant fitting) will cause drive components in other areas (belts, pulleys, and knives) to move. Stay clear of driven components at all times.
- Wear protective gear when working on the machine.
- Wear heavy gloves when working on knife components.

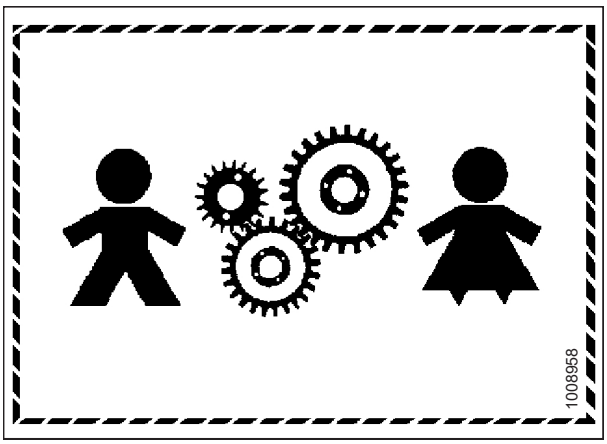

Figure 1.9: Equipment NOT Safe for Children

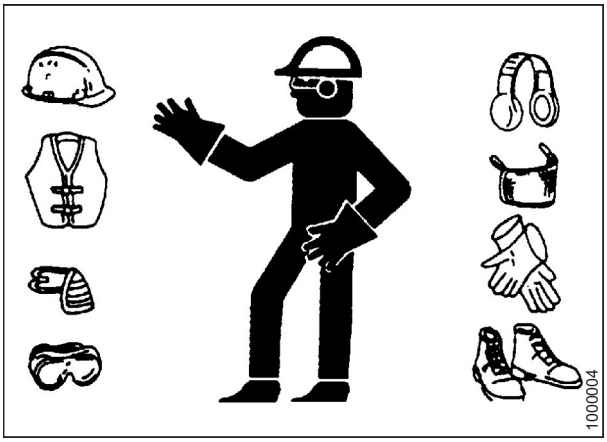

Figure 1.10: Safety Equipment

1.5 Hydraulic Safety

- Always place all hydraulic controls in Neutral before leaving the operator's seat.
- Make sure that all components in the hydraulic system are kept clean and in good condition.
- Replace any worn, cut, abraded, flattened, or crimped hoses and steel lines.
- Do **NOT** attempt any makeshift repairs to hydraulic lines, fittings, or hoses by using tapes, clamps, cements, or welding. The hydraulic system operates under extremely high-pressure. Makeshift repairs will fail suddenly and create hazardous and unsafe conditions.

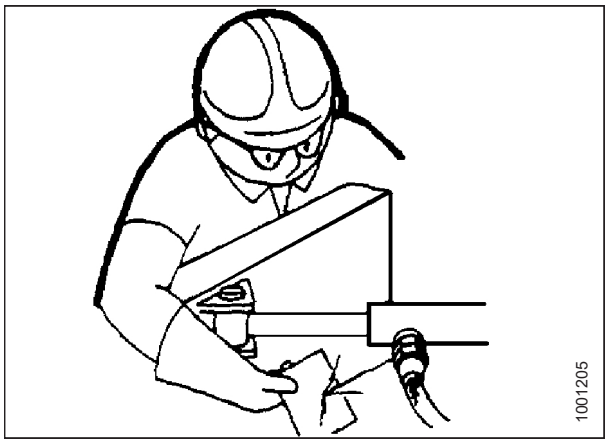

Figure 1.11: Testing for Hydraulic Leaks

- Wear proper hand and eye protection when searching for high-pressure hydraulic leaks. Use a piece of cardboard as a backstop instead of hands to isolate and identify a leak.
- If injured by a concentrated high-pressure stream of hydraulic fluid, seek medical attention immediately. Serious infection or toxic reaction can develop from hydraulic fluid piercing the skin.



Figure 1.12: Hydraulic Pressure Hazard

- Make sure all components are tight and steel lines, hoses, and couplings are in good condition before applying pressure to a hydraulic system.

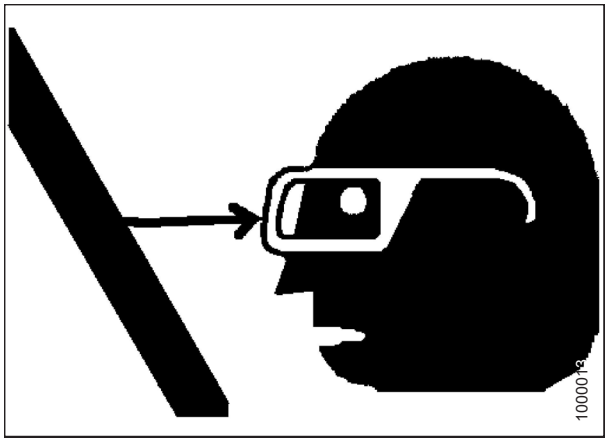

Figure 1.13: Safety around Equipment

1.6 Safety Signs

- Keep safety signs clean and legible at all times.
- Replace safety signs that are missing or illegible.
- If the original part on which a safety sign was installed is replaced, be sure the repair part displays the current safety sign.
- Replacement safety signs are available from your MacDon Dealer Parts Department.

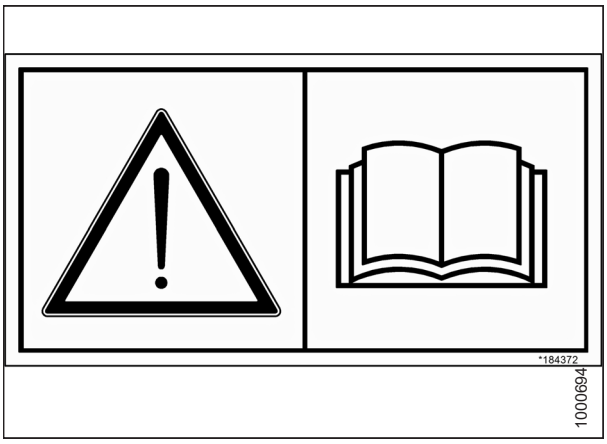

Figure 1.14: Operator's Manual Decal

1.6.1 Installing Safety Decals

1. Clean and dry the installation area.
2. Decide exactly where you are going to place the decal.
3. Remove the smaller portion of the split backing paper.
4. Place the decal in position and slowly peel back the remaining paper, smoothing the decal as it is applied.
5. Prick small air pockets with a pin and smooth out.

1.7 Safety Decal Locations

Figure 1.15: Upper Cross Auger

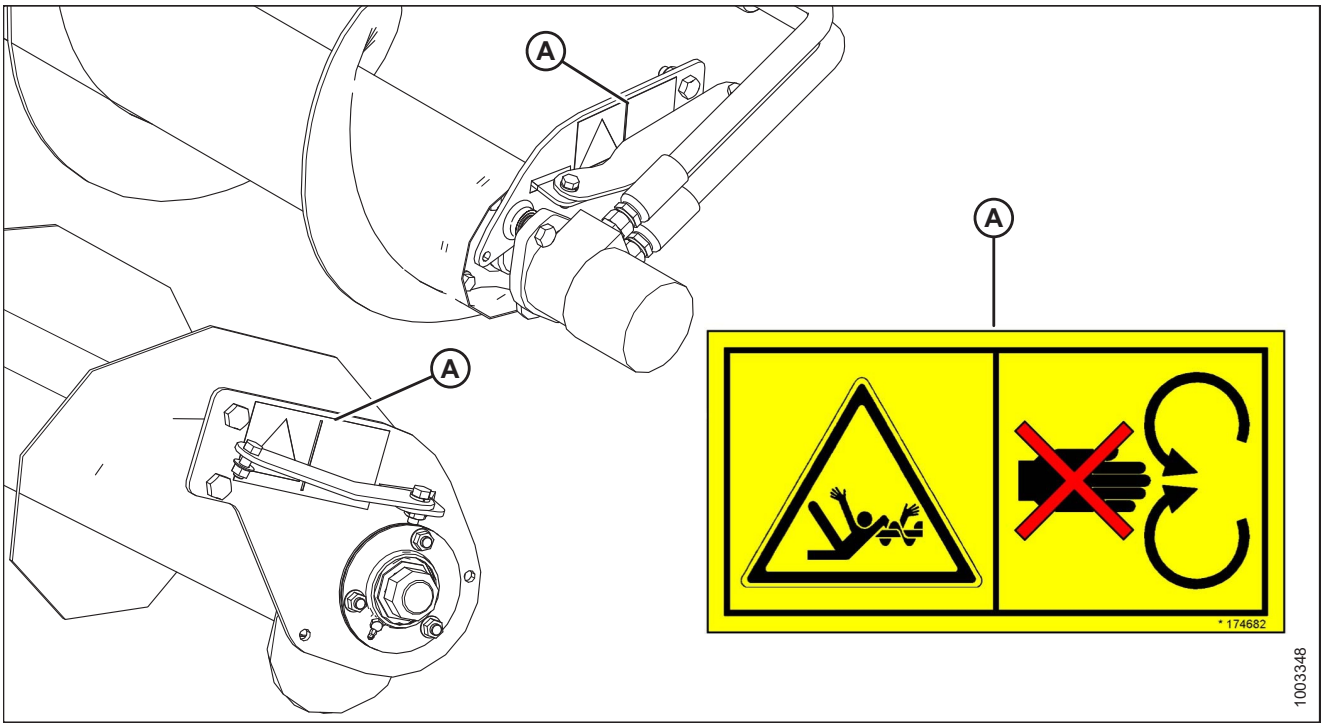

A - MD #174682

Figure 1.16: Slow Speed Transport

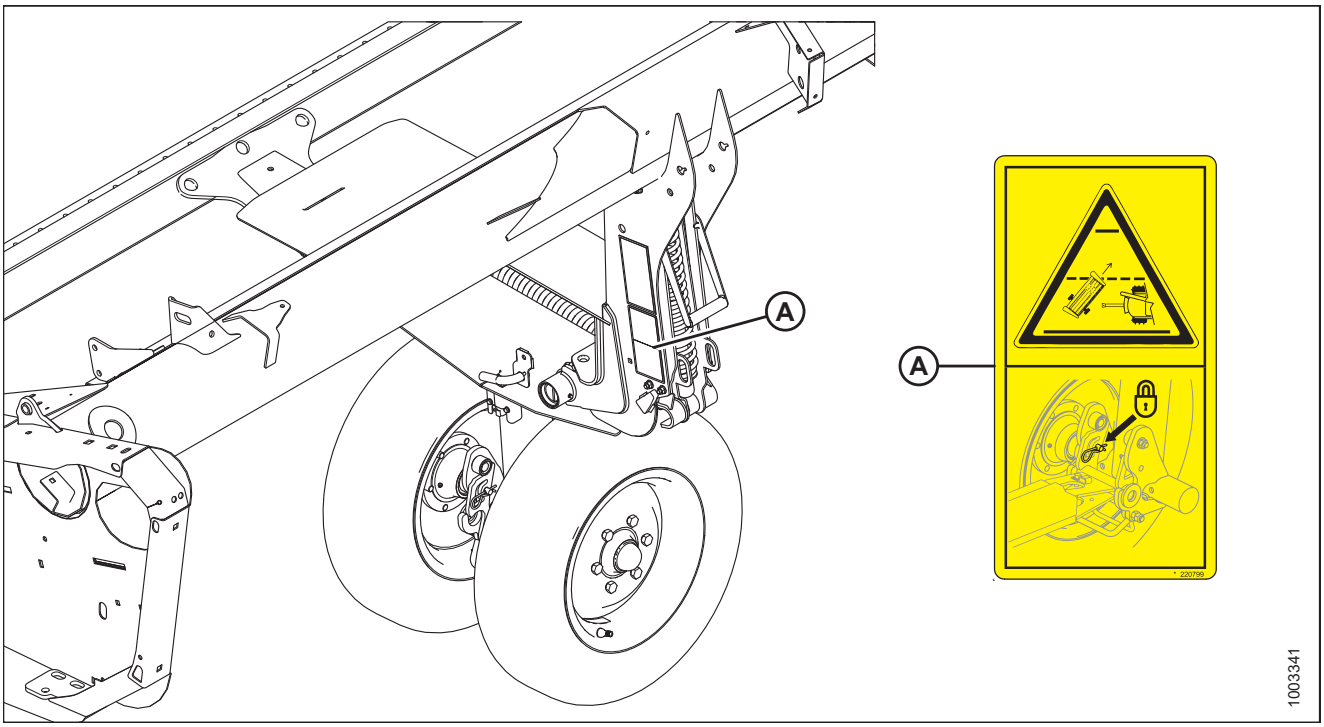

A - MD #220799

Figure 1.17: Slow Speed Transport Tow-Bar

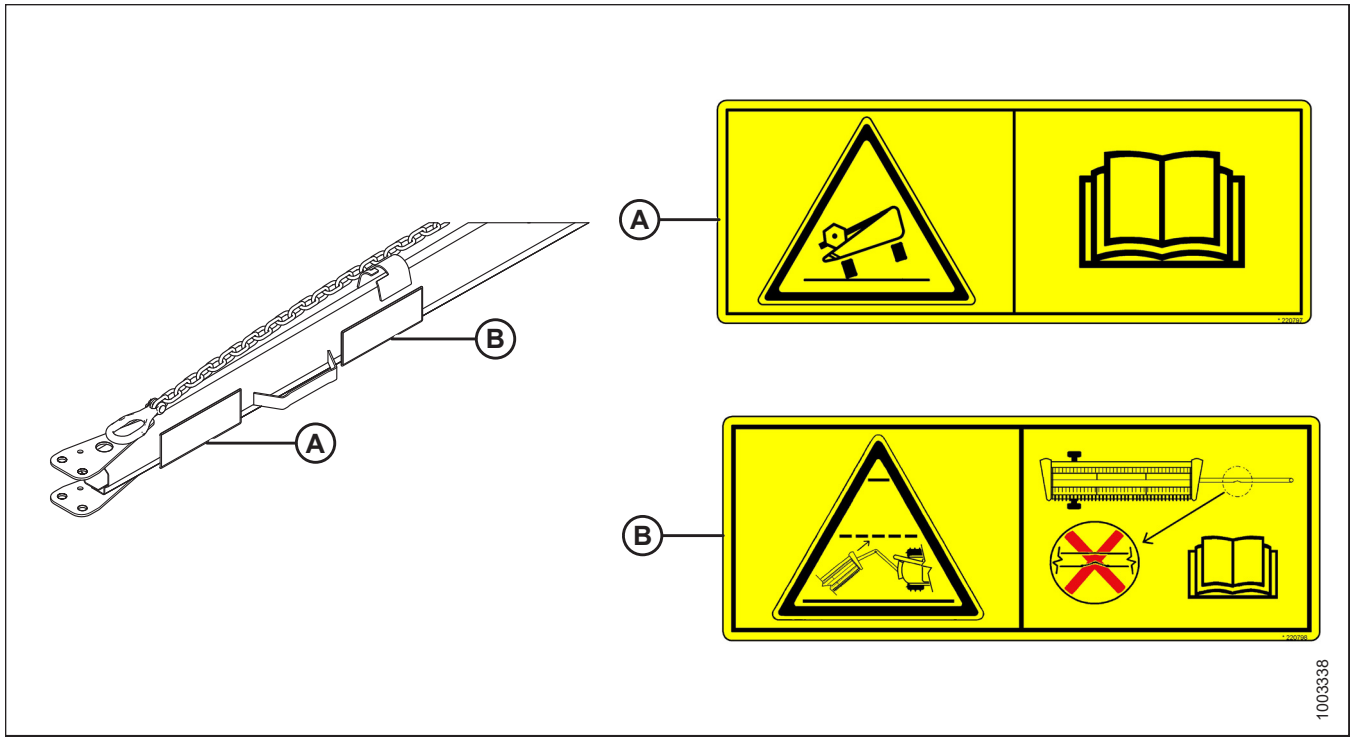

A - MD #220797

B - MD #220798

Figure 1.18: Vertical Knife

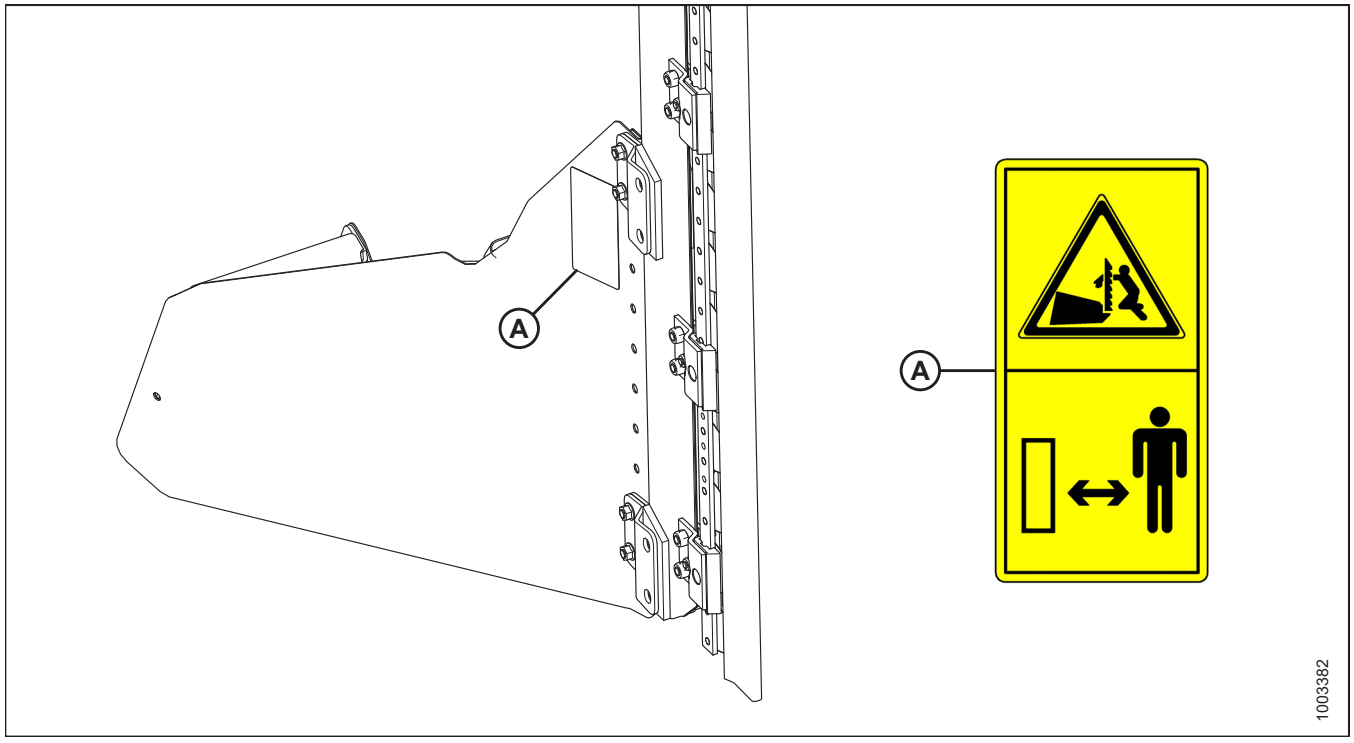

A - MD #174684

Figure 1.19: Endsheets, Reel Arms, and Backsheet

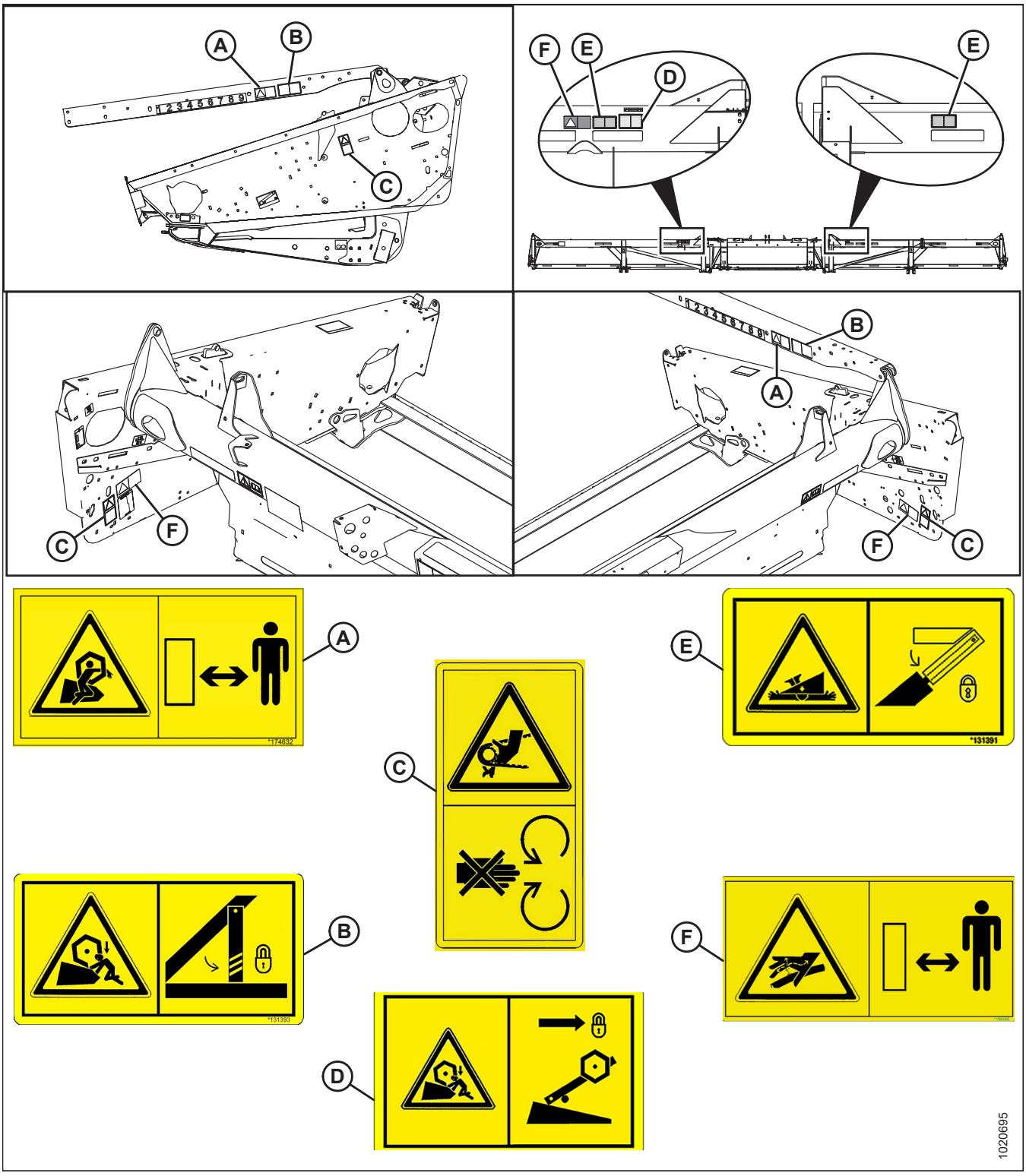

A - MD #174632
B - MD #131393
C - MD #184422
D - MD #131392 (Double Reel Only)
E - MD #131391 (Two Places)
F - MD #166466 (Three Places)

Figure 1.20: Backtube

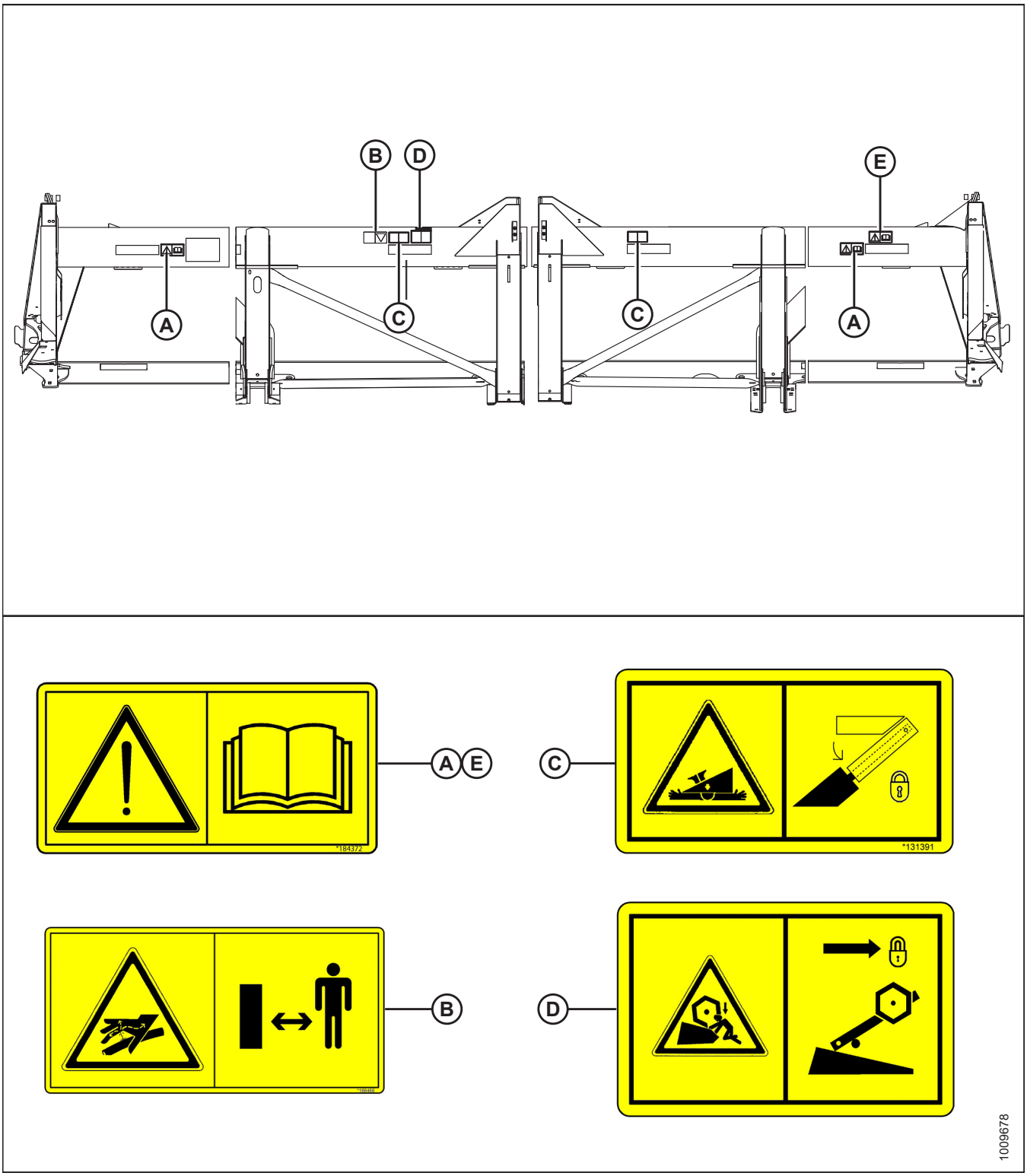

A - MD #184372
B - MD #166466
C - MD #131391
D - MD #131392
E - MD #184372 (Split Frame)

Figure 1.21: D115 Header Backtube

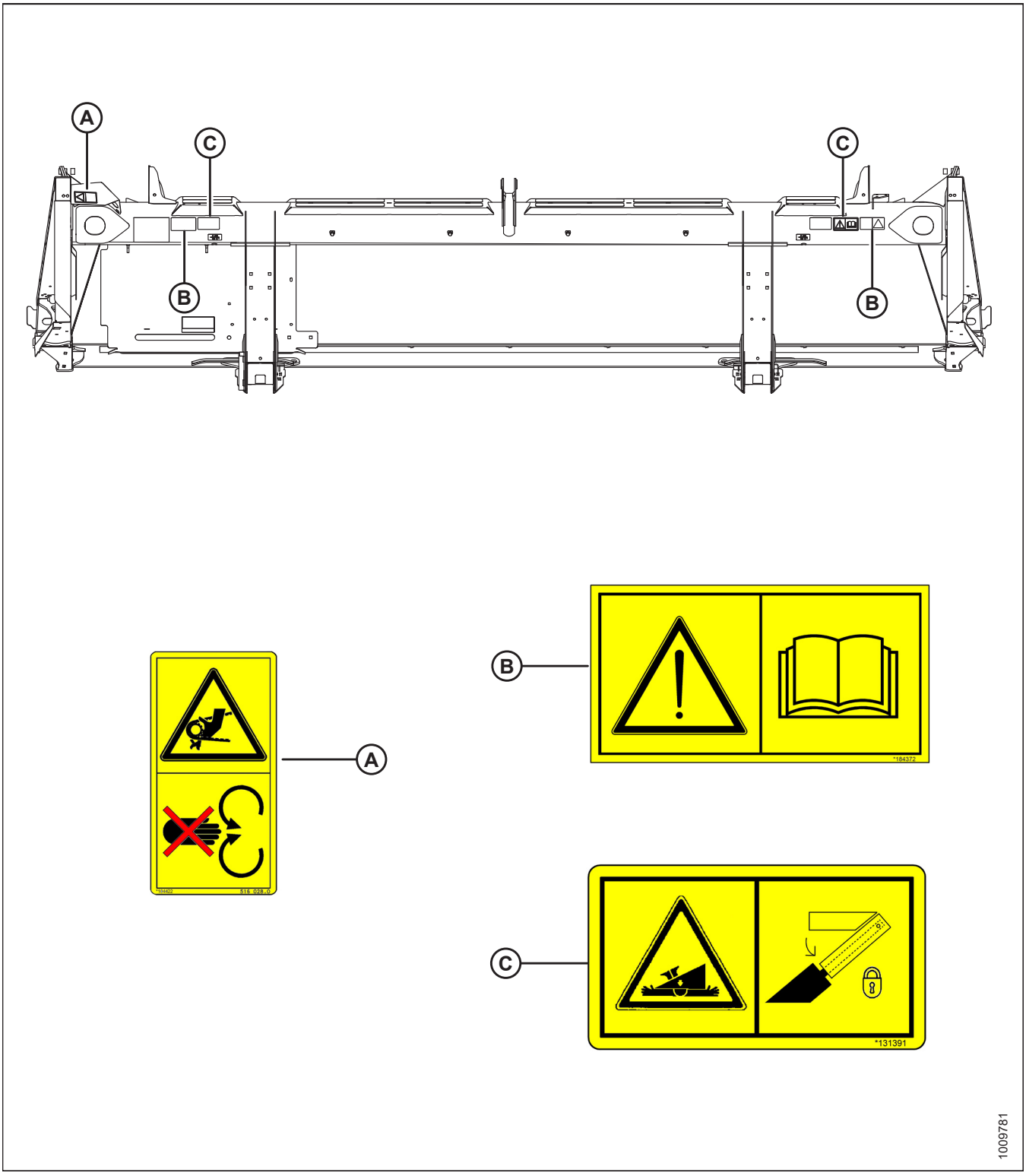

A - MD #184422 **B - MD #184372** **C - MD #131391**

Figure 1.22: D120 Header Backtube

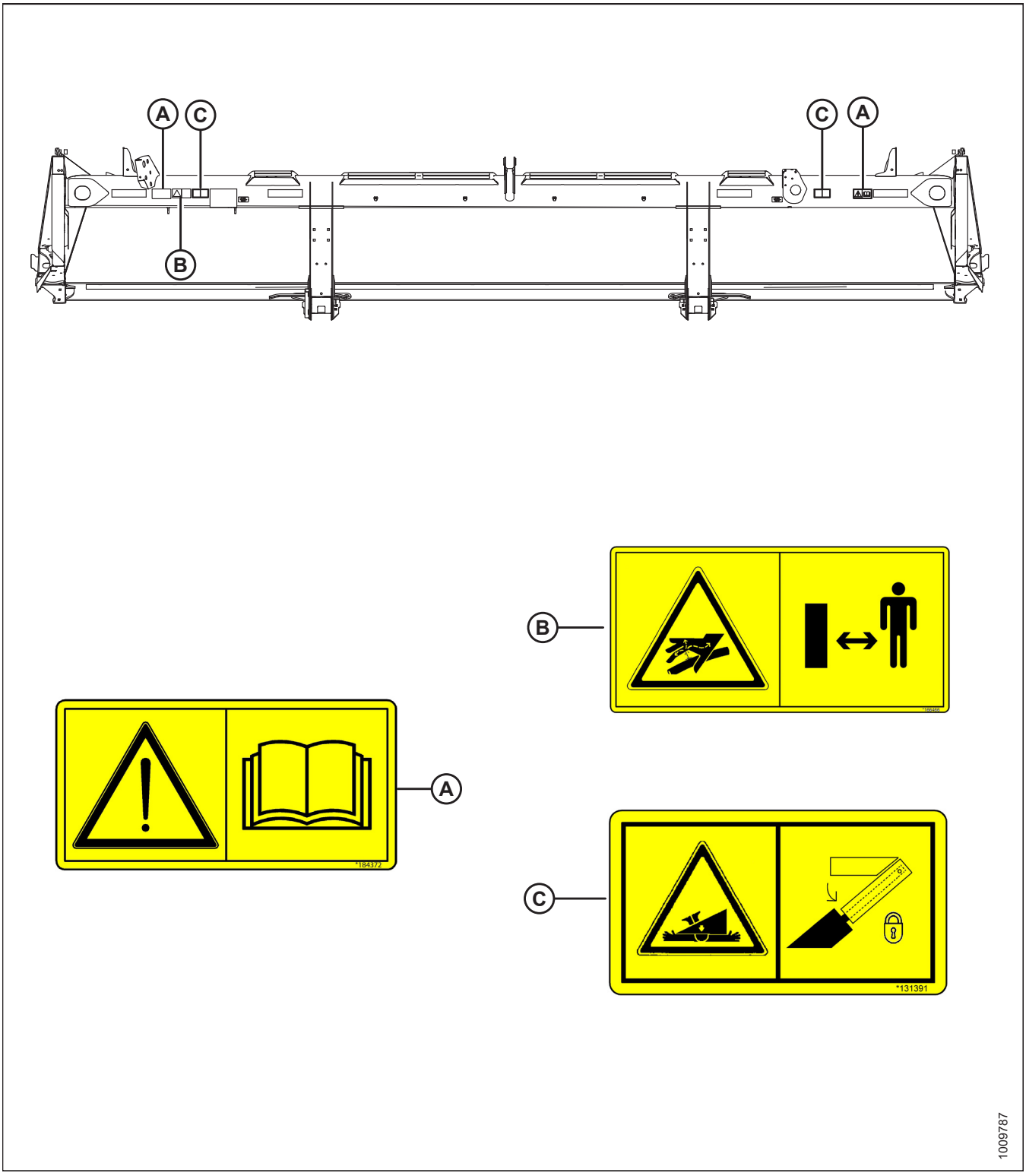

A - MD #184372 **B - MD #166466** **C - MD #131391**

Figure 1.23: D125 Header Backtube

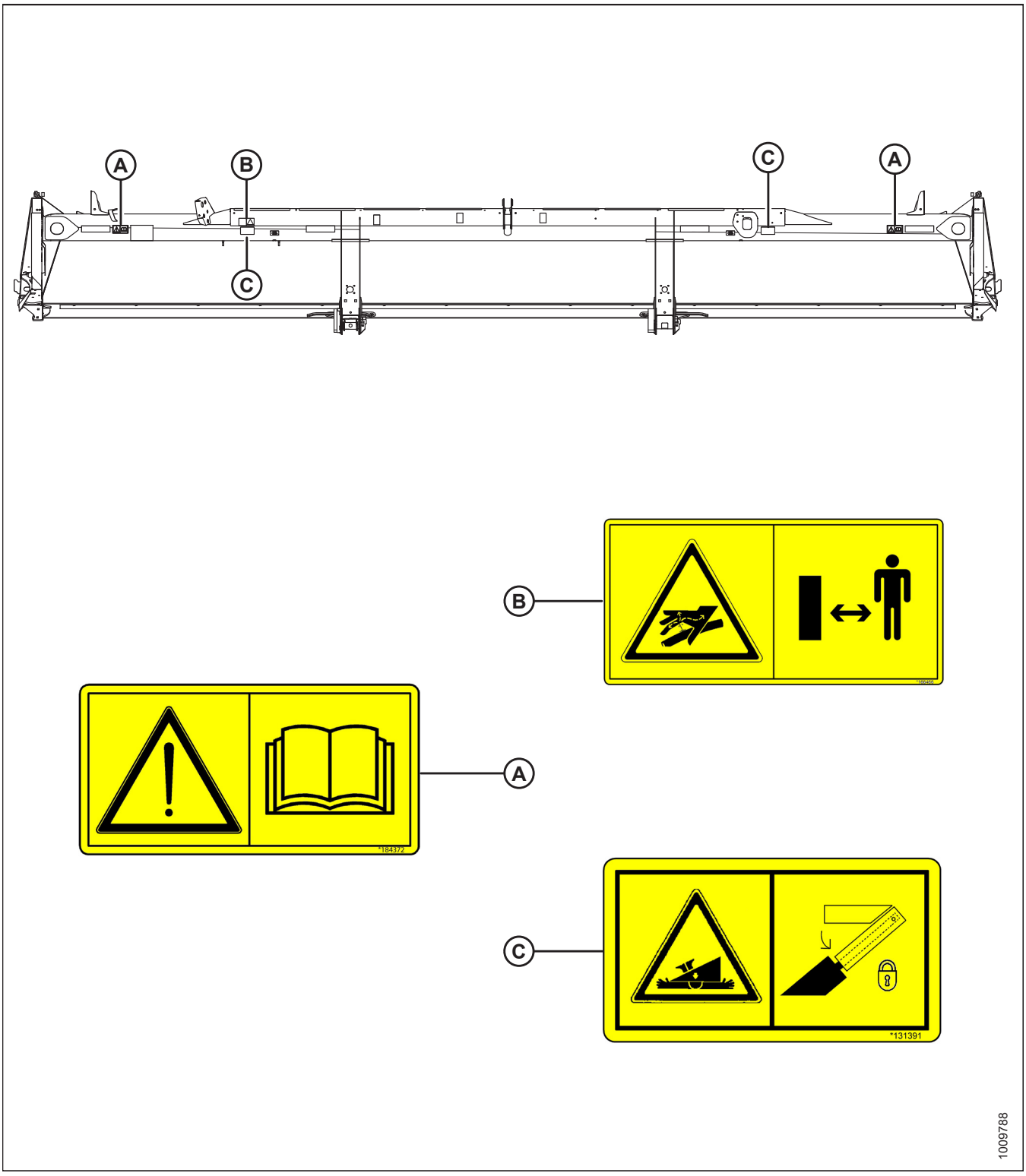

A - MD #184372 **B - MD #166466** **C - MD #131391**

Figure 1.24: D130, D135, D140, and D145 Header Backtube

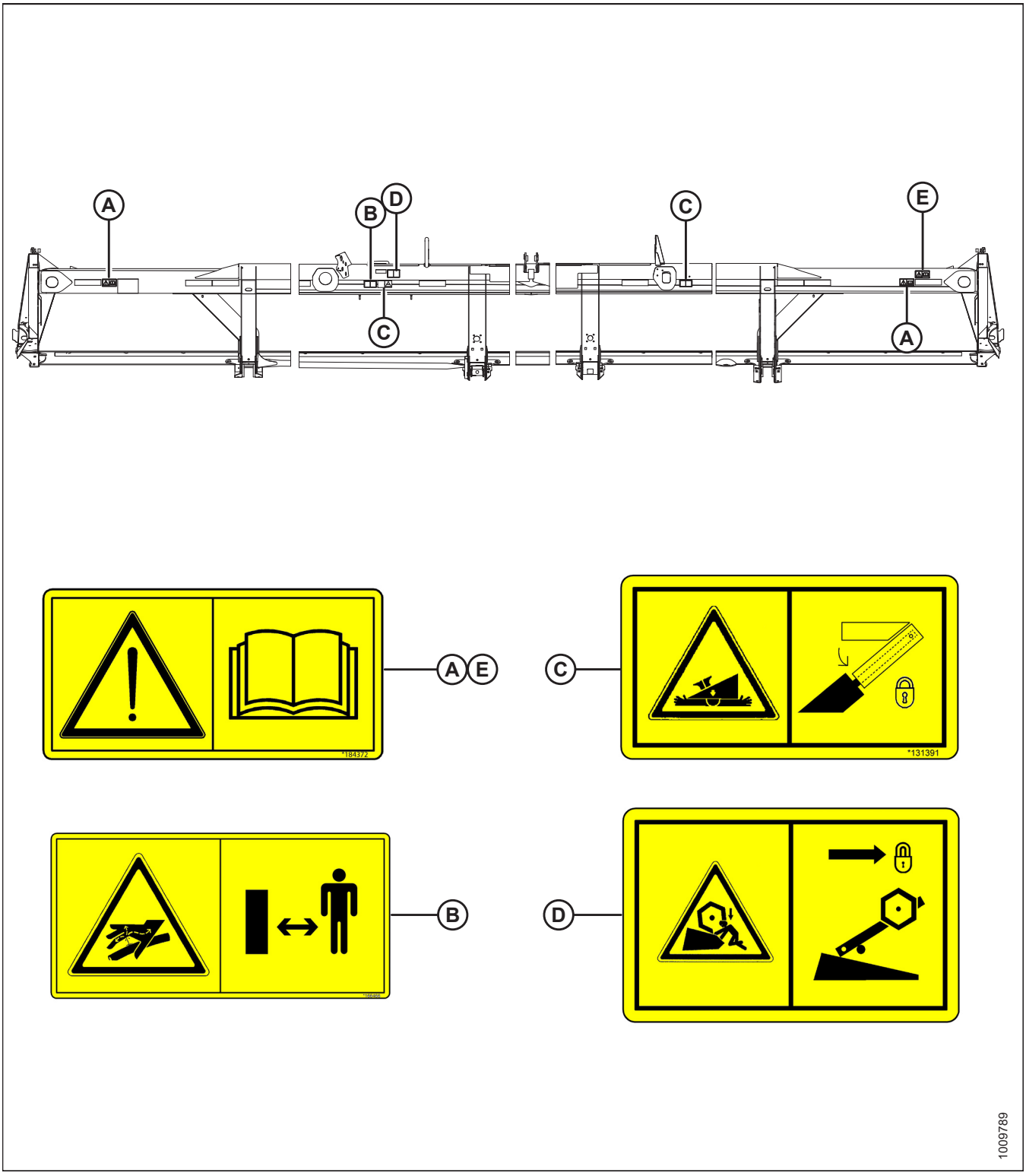

A - MD #184372 (Except D140 Split Frame)
B - MD #166466
C - MD #131391
D - MD #131392 (D130 and D135 Double Reel Only)
E - MD #184372 (D130 Split Frame)

Figure 1.25: FM100 Float Module

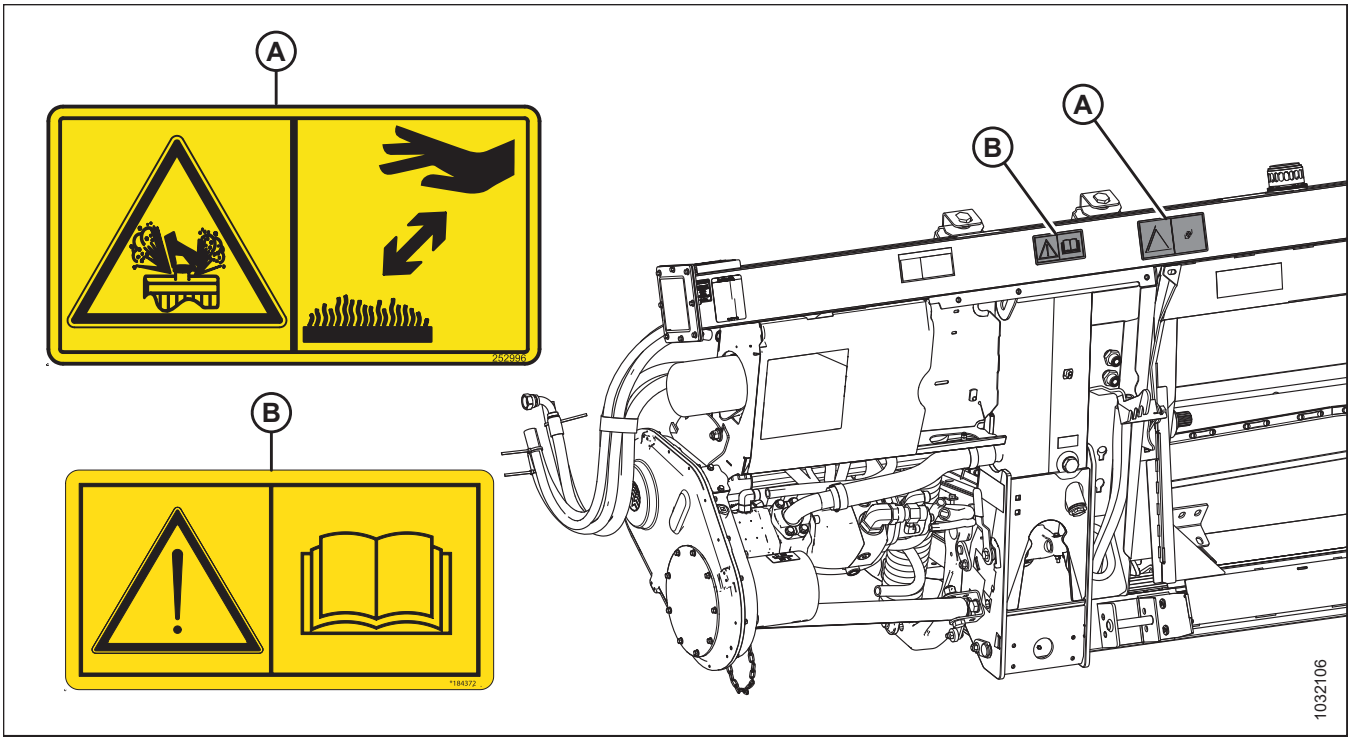

A - MD #252996

B - MD #184372

1.8 Understanding Safety Signs

MD #113482

General hazard pertaining to machine operation and servicing

DANGER

To prevent injury or death from improper or unsafe machine operation:

- Read the operator's manual and follow all safety instructions. If you do not have a manual, obtain one from your Dealer.
- Do **NOT** allow untrained persons to operate the machine.
- Review safety instructions with all Operators every year.
- Ensure that all safety signs are installed and legible.
- Make certain everyone is clear of machine before starting engine and during operation.
- Keep riders off the machine.
- Keep all shields in place and stay clear of moving parts.
- Disengage header drive, put transmission in Neutral, and wait for all movement to stop before leaving operator's position.
- Stop the engine and remove the key from the ignition before servicing, adjusting, lubricating, cleaning, or unplugging machine.
- Engage safety locks to prevent lowering of raised unit before servicing in the raised position.
- Use slow moving vehicle emblem and flashing warning lights when operating on roadways unless prohibited by law.



Figure 1.26: MD #113482

MD #131391

Header crushing hazard

DANGER

To prevent injury or death from fall of a raised header:

- Fully raise header, stop the engine, remove the key, and engage mechanical safety locks on combine or windrower before going under header
- Alternatively, rest header on ground, stop the engine, and remove the key before servicing

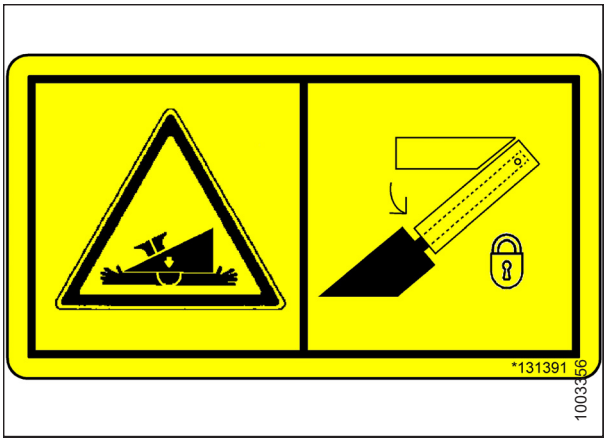

Figure 1.27: MD #131391

MD #131392

Reel crushing hazard

WARNING

- To prevent injury from fall of raised reel; fully raise reel, stop the engine, remove the key, and engage mechanical safety lock on each reel support arm before working on or under reel.

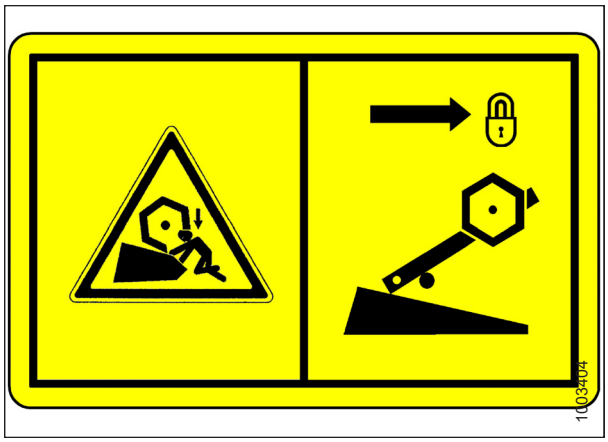

Figure 1.28: MD #131392

MD #131393

Reel crushing hazard

WARNING

- To prevent injury from fall of raised reel; fully raise reel, stop the engine, remove the key, and engage mechanical safety lock on each reel support arm before working on or under reel.



Figure 1.29: MD #131393

MD #166466

High-pressure oil hazard

WARNING

To prevent serious injury, gangrene, or death:

- Do **NOT** go near leaks.
- Do **NOT** use finger or skin to check for leaks.
- Lower load or relieve hydraulic pressure before loosening fittings.
- High-pressure oil can easily puncture skin, and can cause serious injury, gangrene, or death.
- If injured, seek emergency medical help. Immediate surgery is required to remove oil.

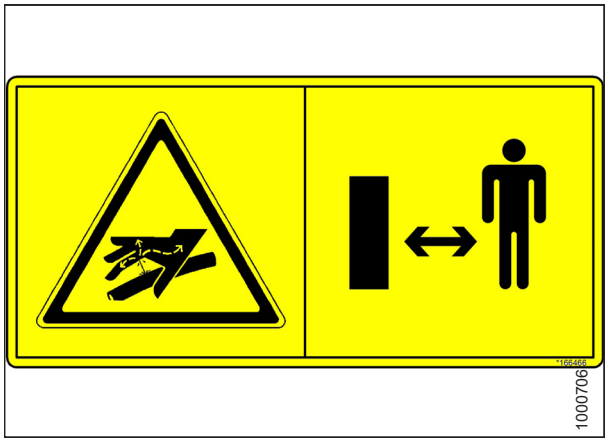

Figure 1.30: MD #166466

MD #174436

High-pressure oil hazard

WARNING

To prevent serious injury, gangrene, or death:

- Do **NOT** go near leaks.
- Do **NOT** use finger or skin to check for leaks.
- Lower load or relieve hydraulic pressure before loosening fittings.
- High-pressure oil can easily puncture skin, and can cause serious injury, gangrene, or death.
- If injured, seek emergency medical help. Immediate surgery is required to remove oil.



Figure 1.31: MD #174436

MD #174632

Reel entanglement hazard

DANGER

To prevent injury from entanglement with rotating reel:

- Stand clear of header while machine is running.

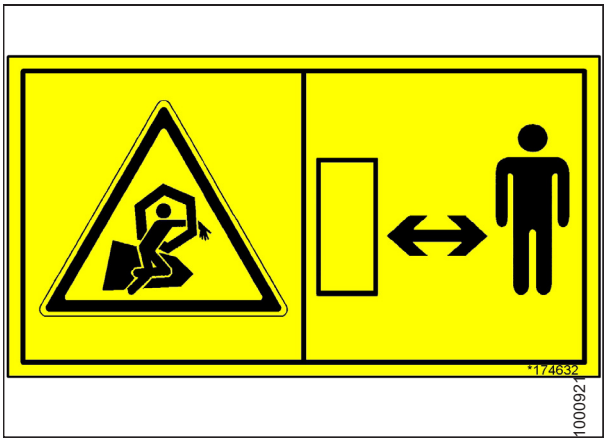

Figure 1.32: MD #174632

MD #184372

General hazard pertaining to machine operation and servicing

DANGER

To prevent injury or death from improper or unsafe machine operation:

- Read the operator's manual and follow all safety instructions. If you do not have a manual, obtain one from your Dealer.
- Do **NOT** allow untrained persons to operate the machine.
- Review safety instructions with all Operators every year.
- Ensure that all safety signs are installed and legible.
- Make certain everyone is clear of machine before starting engine and during operation.
- Keep riders off the machine.
- Keep all shields in place and stay clear of moving parts.
- Disengage header drive, put transmission in Neutral, and wait for all movement to stop before leaving operator's position.
- Stop the engine and remove the key from the ignition before servicing, adjusting, lubricating, cleaning, or unplugging machine.
- Engage safety locks to prevent lowering of raised unit before servicing in the raised position.
- Use slow moving vehicle emblem and flashing warning lights when operating on roadways unless prohibited by law.

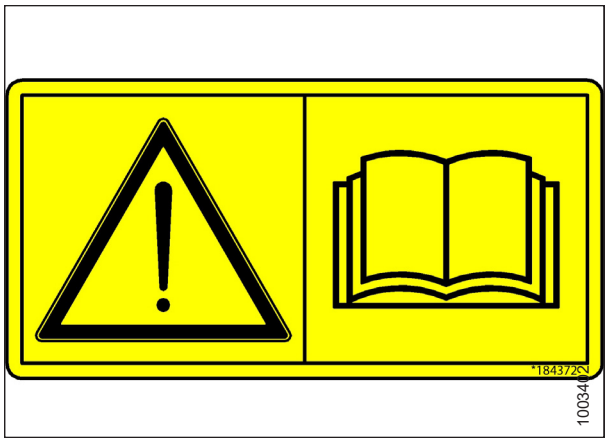

Figure 1.33: MD #184372

MD #184422

Hand and arm entanglement hazard

WARNING

To prevent injury:

- Stop engine and remove key before opening shield.
- Do **NOT** operate without shields in place.

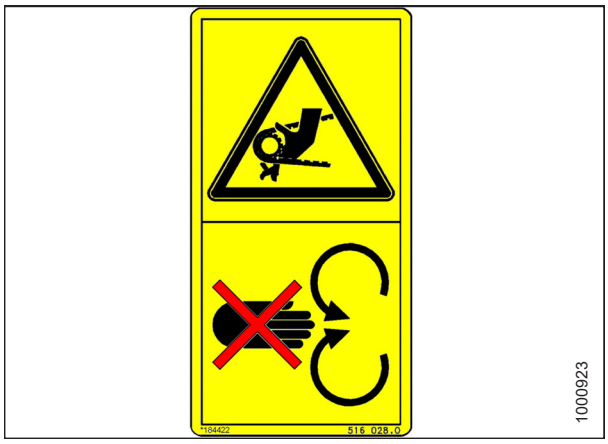

Figure 1.34: MD #184422

MD #220797

Transport tipping hazard

DANGER

To prevent serious injury or death from transport tipping:

- Read the operator's manual for more information on potential tipping or rollover of header while transporting.

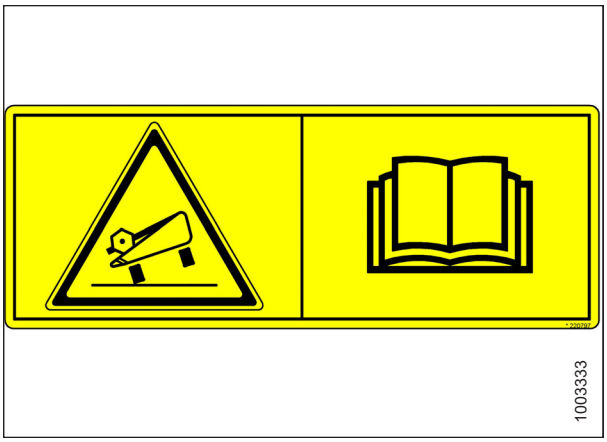

Figure 1.35: MD #220797

MD #220798

Loss of control hazard.

DANGER

To prevent serious injury or death from loss of control:

- Do **NOT** tow the header with a dented or otherwise damaged tow pole.
- Consult the operator's manual for more information.

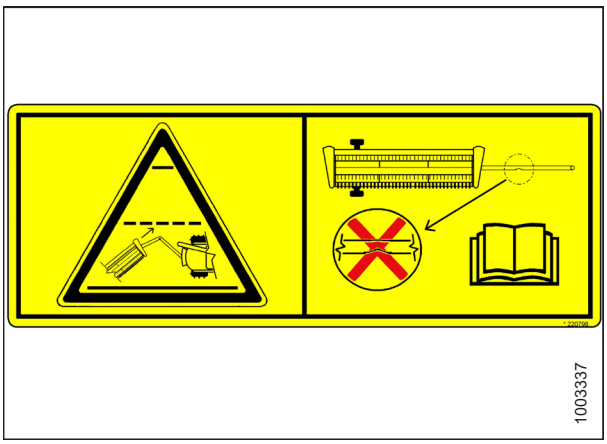

Figure 1.36: MD #220798

MD #220799

Loss of control hazard

WARNING

To prevent serious injury or death from loss of control:

- Ensure tow-bar lock mechanism is locked.

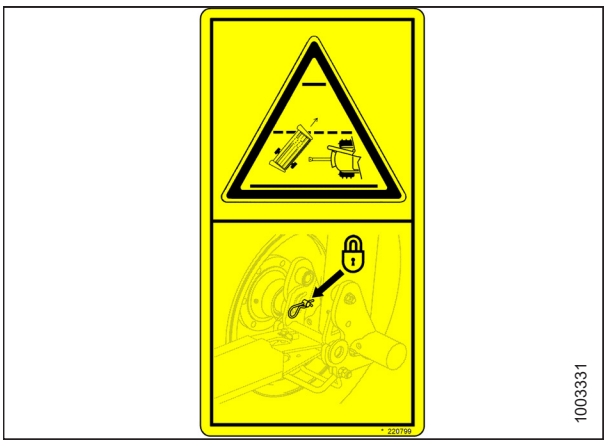

Figure 1.37: MD #220799

MD #252996

Hot fluid spray hazard

CAUTION

To prevent injury:

- Do **NOT** remove fluid fill cap when machine is hot.
- Allow machine to cool down before opening fluid fill cap.
- Fluid is under pressure and may be hot.



Figure 1.38: MD #252996

MD #279085

Auger entanglement hazard

DANGER

To prevent injury from rotating auger:

- Stand clear of auger while machine is running.
- Stop engine and remove key before servicing auger.
- Do **NOT** reach into moving parts while machine is running.



Figure 1.39: MD #279085

MD #304865

Header crushing hazard

DANGER

To prevent injury or death from fall of raised header:

- Do **NOT** lift header at marked locations.
- Only use marked locations to lower header from vertical to horizontal position



Figure 1.40: MD #304865

Chapter 2: Product Overview

2.1 Definitions

The following terms and acronyms may be used in this manual:

Term	Definition
AHHC	Automatic Header Height Control
API	American Petroleum Institute
ASTM	American Society of Testing and Materials
Bolt	A headed and externally threaded fastener that is designed to be paired with a nut
Center-link	A hydraulic cylinder link between header and machine used to change header angle
CGVW	Combined gross vehicle weight
D1 Series Header	MacDon D120, D125, D130, D135, D140, and D145 combine draper header
DDD	Double-draper drive
DK	Double knife
DKD	Double-knife drive
DR	Double reel
Export header	Header configuration typical outside North America
FFFT	Flats from finger tight
Finger tight	Finger tight is a reference position where sealing surfaces or components are making contact with each other, and fitting has been tightened to a point where fitting is no longer loose
FM100	Float module used with a D1 or FD1 Series header for combining
GSL	Ground speed lever
GVW	Gross vehicle weight
Hard joint	A joint made with use of a fastener where joining materials are highly incompressible
Header	A machine that cuts crop and feeds it into an attached combine
Hex key	A tool of hexagonal cross-section used to drive bolts and screws that have a hexagonal socket in head (internal-wrenching hexagon drive); also known as an Allen key and various other synonyms
hp	Horsepower
JIC	Joint Industrial Council: A standards body that developed standard sizing and shape for original 37° flared fitting
Knife	A cutting device which uses a reciprocating cutter (also called a sickle)
n/a	Not applicable
NPT	National Pipe Thread: A style of fitting used for low-pressure port openings. Threads on NPT fittings are uniquely tapered for an interference fit
Nut	An internally threaded fastener that is designed to be paired with a bolt
ORB	O-ring boss: A style of fitting commonly used in port openings on manifolds, pumps, and motors

Term	Definition
ORFS	O-ring face seal: A style of fitting commonly used for connecting hoses and tubes. This style of fitting is also commonly called ORS, which stands for O-ring seal
RoHS (Reduction of Hazardous Substances)	A directive by the European Union to restrict use of certain hazardous substances (such as hexavalent chromium used in some yellow zinc platings)
rpm	Revolutions per minute
SAE	Society of Automotive Engineers
Screw	A headed and externally threaded fastener that threads into preformed threads or forms its own thread into a mating part
SDD	Single-draper drive
SK	Single knife
Soft joint	A joint made with use of a fastener where joining materials are compressible or experience relaxation over a period of time
spm	Strokes per minute
SR	Single reel
Tension	Axial load placed on a bolt or screw, usually measured in Newtons (N) or pounds (lb.)
TFFT	Turns from finger tight
Timed knife drive	Synchronized motion applied at cutterbar to two separately driven knives from a single hydraulic motor
Torque	The product of a force X lever arm length, usually measured in Newton-meters (Nm) or foot-pounds (lbf·ft)
Torque angle	A tightening procedure where fitting is assembled to a precondition (finger tight) and then nut is turned farther a number of degrees to achieve its final position
Torque-tension	The relationship between assembly torque applied to a piece of hardware and axial load it induces in bolt or screw
Truck	A four-wheel highway/road vehicle weighing no less than 3400 kg (7500 lb.)
UCA	Upper cross auger
Untimed knife drive	Unsynchronized motion applied at cutterbar to two separately driven knives from a single hydraulic motor or two hydraulic motors
Washer	A thin cylinder with a hole or slot located in the center that is to be used as a spacer, load distribution element, or locking mechanism

2.2 Specifications

The following symbol and letters are used in Table *2.1, page 25* and Table *2.2, page 27*:

D1 | FM100 | Attachments

S: standard / O_F: optional (factory installed) / O_D: optional (dealer installed) / –: not available

Table 2.1 Header Specifications

Cutterbar			
Effective cutting width (distance between crop divider points)			
D115 header		4572 mm (180 in.)	S
D120 header		6096 mm (240 in.)	S
D125 header		7620 mm (300 in.)	S
D130 header		9144 mm (360 in.)	S
D135 header		10,668 mm (420 in.)	S
D140 header		12,192 mm (480 in.)	S
D145 header		13,716 mm (540 in.)	S
Cutterbar lift range		Varies with combine model	—
Knife			
Single-knife drive (all sizes): One hydraulic motor with V-belt to one heavy duty MD knife drive box			O_F
Double-knife timed drive 6.1–10.7 m (20–35 ft.): One hydraulic motor with two cogged belts to two heavy duty knife drive boxes			O_F
Double-knife untimed drive 12.2–13.7 m (40–45 ft.): Two hydraulic motors with V-belts to two heavy duty knife drive boxes			O_F
Knife stroke		76 mm (3 in.)	S
Single-knife speed[1]	D125 header	1200–1450 (strokes/min.)	S
Single-knife speed	D130 header	1200–1400 (strokes/min.)	S
Single-knife speed	D135 header	1100–1300 (strokes/min.)	S
Single-knife speed	D140 header	1050–1200 (strokes/min.)	S
Double-knife speed	D120 and D125 headers	1400–1700 (strokes/min.)	S
Double-knife speed	D130 and D135 headers	1200–1500 (strokes/min.)	S
Double-knife speed	D140 and D145 headers	1100–1400 (strokes/min.)	S

1. Under normal cutting conditions, set knife speed at the knife drive pulley between 600 and 640 rpm (1200 and 1280 spm). If set to low side of chart, you could experience knife stalling.

Table 2.1 Header Specifications (continued)

Knife Sections			
Over-serrated, solid, bolted (9 serrations per inch)			O_F
Over-serrated, solid, bolted (14 serrations per inch)			O_F
Knife overlap at center (double-knife headers)		3 mm (1/8 in.)	S
Guards and Hold-Downs			
Guard: pointed, forged, double heat treated (DHT) Hold-down: Sheet metal, adjustment bolt			O_F
Guard: pointed, forged, case hardened (CH) Hold-down: Sheet metal, adjustment bolt			O_F
Guard: stub, forged bottom, forged top, adjustment plate			O_F
Guard: stub, forged bottom, sheet metal top, adjustment bolt			O_F
Guard Angle (Cutterbar on Ground)			
Center-link retracted	D120 and D125 headers	7.0°	S
Center-link retracted	D130, D135, D140, and D145 headers	2.0°	S
Center-link extended	D120 and D125 headers	12.4°	S
Center-link extended	D130, D135, D140, and D145 headers	7.4°	S
Draper (Conveyor) and Decks			
Draper width		1057 mm (41 19/32 in.)	S
Draper drive		Hydraulic	S
Draper speed (FM100 Float Module controlled)		193 m/min. (0–635 fpm)	S
PR15 Pick-Up Reel			S
Quantity of tine tubes		5, 6, or 9	—
Center tube diameter: All reel sizes except D135 single span		203 mm (8 in.)	—
D135 single span		254 mm (10 in.)	—
Finger tip radius	Factory assembled	800 mm (31 1/2 in.)	—
Finger tip radius	Adjustment range	766–800 mm (30 3/16 – 31 1/2 in.)	—
Effective reel diameter (via cam profile)		1650 mm (65 in.)	—
Finger length		290 mm (11 in.)	—
Finger spacing (staggered on alternate bats)		150 mm (6 in.)	—
Reel drive		Hydraulic	S
Reel speed (adjustable from cab, varies with combine model)		0–67 rpm	S

Table 2.1 Header Specifications (continued)

Frame and Structure				
Header width	Field mode		Cut width + 1384 mm (5.1 in.)	S
Header width	Transport mode: reel fore-aft fully retracted, shortest center-link	(A) long dividers removed	2500 mm (98 in.)	—
Header width	Transport mode: reel fore-aft fully retracted, shortest center-link	(B) long dividers installed	2684 mm (106 in.)	—

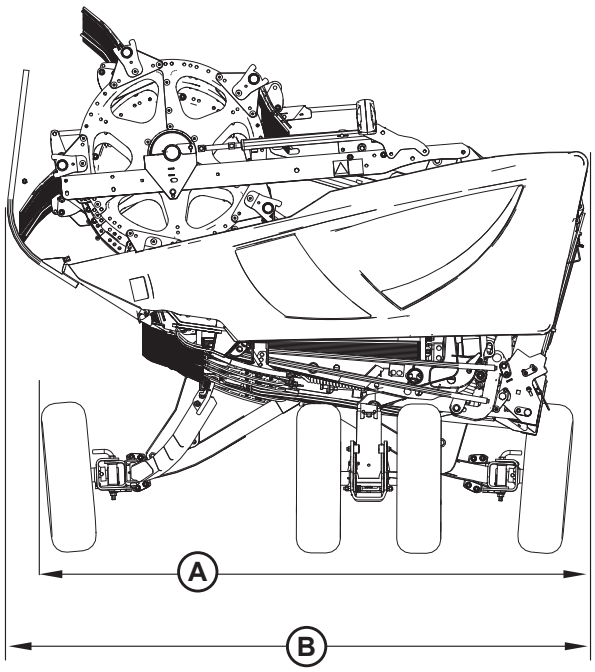

Table 2.2 Header Attachments

FM100 Float Module			
Feed draper	Width	2.000 m (78 11/16 in.)	S
Feed draper	Speed	107–122 m/min (350–400 fpm)	S
Feed auger	Width	1.660 m (65 5/16 in.)	S
Feed auger	Outside diameter	559 mm (22 in.)	S
Feed auger	Tube diameter	356 mm (14 in.)	S
Feed auger	Speed (varies with combine model)	190 rpm	S
Oil reservoir capacity		85 liters (22.5 US gallons)	S
Oil type		Single grade transmission/hydraulic fluid (THF).	—

Table 2.2 Header Attachments (continued)

THF viscosity at 40°C (104°F)			60.1 cSt	—
THF viscosity at 100°C (212°F)			9.5 cSt	—
Driveline overall length[2]	Case, New Holland	Maximum (extended)	1.230 m (48 7/16 in.)	O_F
Driveline overall length[2]	Case, New Holland	Minimum (compressed)	603 mm (23 3/4 in.)	O_F
Driveline overall length[2]	Challenger, Gleaner, John Deere, CLAAS, Massey Ferguson	Maximum (extended)	1.262 m (49 11/16 in.)	O_F
Driveline overall length[2]	Challenger, Gleaner, John Deere, CLAAS, Massey Ferguson	Minimum (compressed)	916 mm (36 1/16 in.)	O_F
Driveline overall length[2]	John Deere 9650/9660	Maximum (extended)	775 mm (30 1/2 in.)	O_F
Driveline overall length[2]	John Deere 9650/9660	Minimum (compressed)	880 mm (34 5/8 in.)	O_F
Upper Cross Auger				O_D
Outside diameter			305 mm (12 in.)	—
Tube diameter			152 mm (6 in.)	—
Stabilizer Wheel / Slow Speed Transport				O_D
Wheels			38 cm (15 in.)	—
Tires			P205/75 R-15	—

Table 2.3 Header Weight

Estimated weight range for base header without performance options or float module (variances are due to different package configurations)		
D115 header		1424–1442 kg (3140–3180 lb.)
D120 header		1517–1623 kg (3345–3580 lb.)
D125 header		1609–1756 kg (3547–3872 lb.)
D130 header		2003–2341 kg (4415–5160 lb.)
D135 header		2209–2626 kg (4870–5790 lb.)
D140 header	North America frame	2540–2617 kg (5600–5770 lb.)
D140 header	Export frame	2640–2665 kg (5820–5875 lb.)
D145 header	North America frame	2749 kg (6060 lb.)
D145 header	Export frame	2794 kg (6160 lb.)

2. Subtract 265 mm (10 7/16 in.) for length between yoke pins.

2.3 Component Identification

2.3.1 D1 Series Draper Header for Combines

Figure 2.1: D1 Series Draper Header – Double Reel Shown

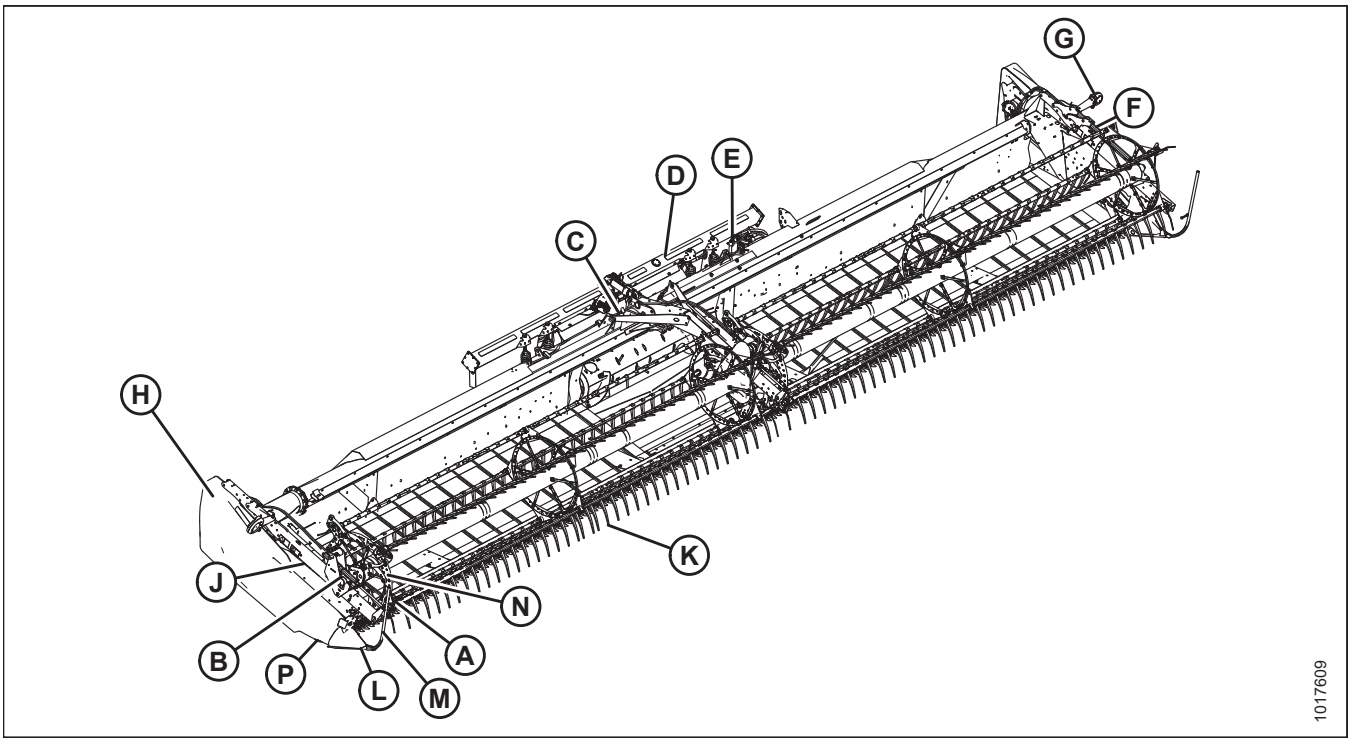

A - Pick-Up Reel
B - Reel Drive and Cam
C - Center-Link
D - FM100 Float Module
E - Hydraulic Connections
F - Reel Fore-Aft Cylinder
G - Transport Light
H - Endshield
J - Reel Lift Cylinder
K - Reel Fingers
L - Divider Cone
M - Divider Rod
N - Reel Endshields
P - Knife Drive Box (Behind Endshield)

2.3.2 FM100 Float Module

Figure 2.2: Header Side of FM100 Float Module

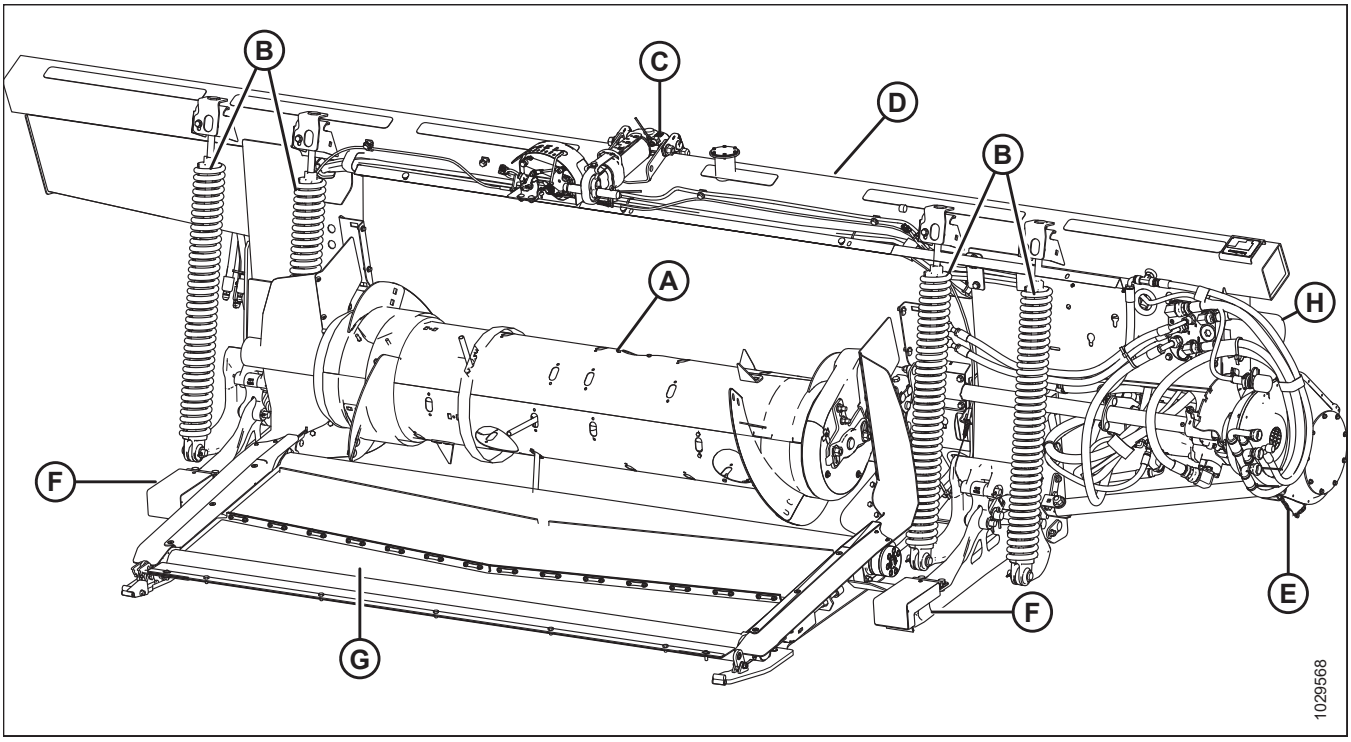

A - Feed Auger
B - Header Float Springs
C - Center-Link
D - Hydraulic Reservoir
E - Gearbox
F - Header Support Arms
G - Feed Draper
H - Hydraulic Filter

Figure 2.3: Combine Side of FM100 Float Module

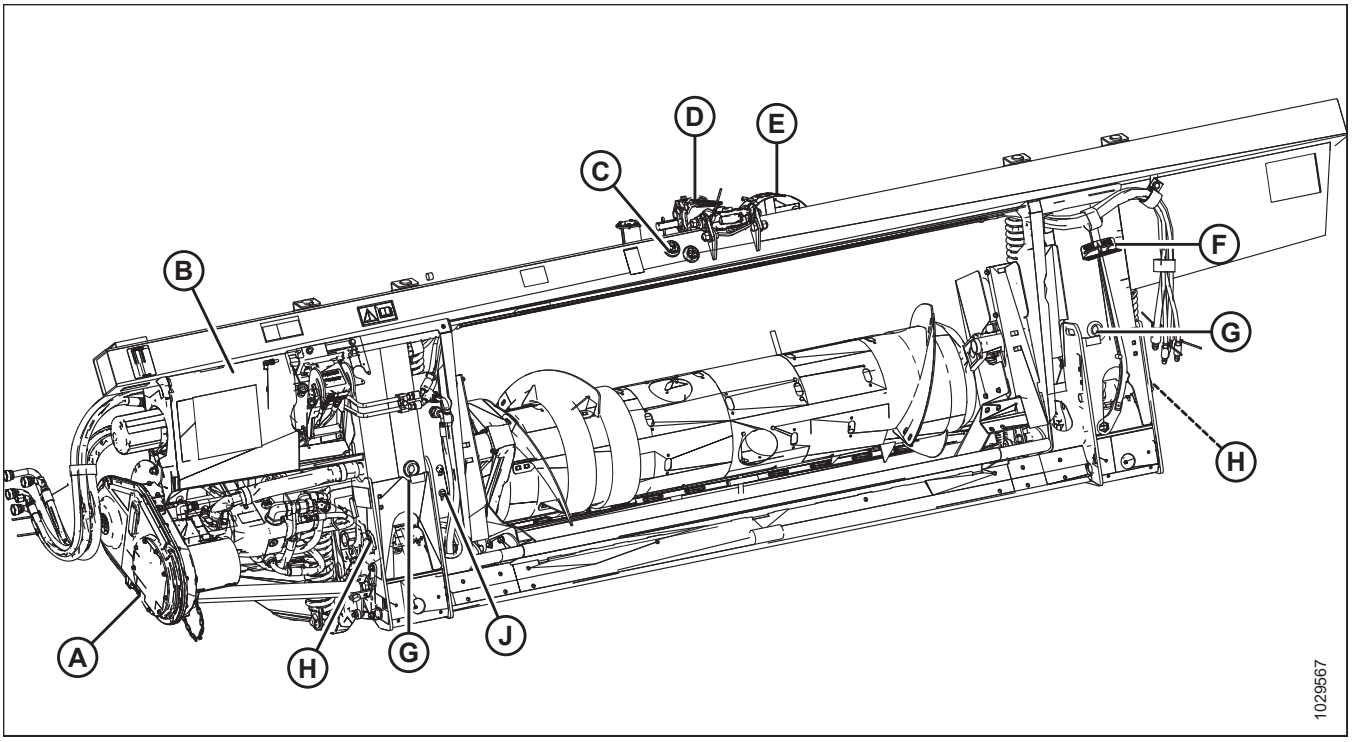

A - Float Module Gearbox
B - Hydraulic Compartment Cover
C - Reservoir Oil Level Sight Glass
D - Center-Link
E - Header Height Control Indicator
F - Torque Wrench
G - Drain Hole (x2)
H - Float Lock Handle (x2)
J - Auto Header Height Control (AHHC) Sensor

Chapter 3: Operation

3.1 Owner/Operator Responsibilities

CAUTION

- **It is your responsibility to read and understand this manual completely before operating the header. Contact your MacDon Dealer if an instruction is not clear to you.**
- **Follow all safety messages in the manual and on safety decals on the machine.**
- **Remember that YOU are the key to safety. Good safety practices protect you and the people around you.**
- **Before allowing someone to operate the header, for however short a time or distance, make sure they have been instructed in its safe and proper use.**
- **Review the manual and all safety related items with all Operators annually.**
- **Be alert for other Operators not using recommended procedures or not following safety precautions. Correct these mistakes immediately, before an accident occurs.**
- **Do NOT modify the machine. Unauthorized modifications may impair the function and/or safety of the machine and may reduce the length of service you receive from your machine.**
- **The safety information given in this manual does not replace safety codes, insurance needs, or laws governing your area. Be sure your machine meets the standards set by these regulations.**

3.2 Operational Safety

CAUTION

Adhere to the following safety precautions:

- **Follow all safety and operational instructions provided in your operator's manuals. If you do not have a combine manual, get one from your Dealer and read it thoroughly.**
- **Never attempt to start the engine or operate the machine except from the operator's seat.**
- **Check the operation of all controls in a safe, clear area before starting work.**
- **Do NOT allow riders on the combine.**

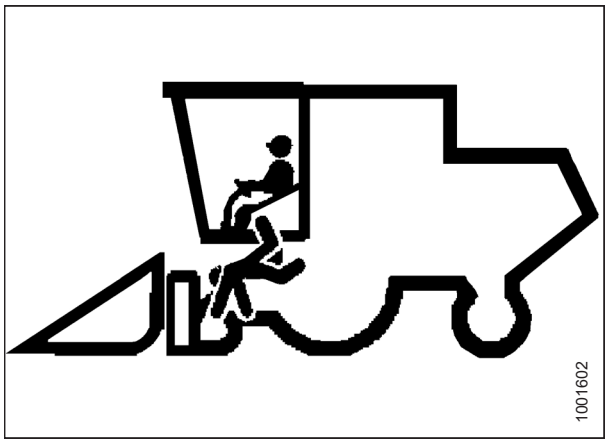

Figure 3.1: No Riders

CAUTION

- **Never start or move the machine until you are sure all bystanders have cleared the area.**
- **Avoid travelling over loose fill, rocks, ditches, or holes.**
- **Drive slowly through gates and doorways.**
- **When working on inclines, travel uphill or downhill whenever possible. Be sure to keep transmission in gear when travelling downhill.**
- **Never attempt to get on or off a moving machine.**
- **Do NOT leave operator's station while the engine is running.**
- **To avoid bodily injury or death from unexpected startup of a machine, always stop the engine and remove the key before adjusting or removing plugged material from the machine.**

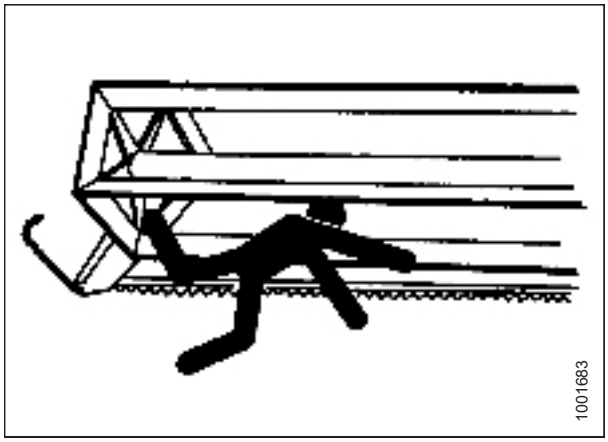

Figure 3.2: Bystander Safety

- **Check for excessive vibration and unusual noises. If there is any indication of trouble, shut down and inspect the machine. Follow proper shutdown procedure. For instructions, refer to *3.5 Shutting down the Combine, page 44*.**
- **Operate only in daylight or good artificial light.**

3.2.1 Header Safety Props

The header safety props located on the header lift cylinders prevent the lift cylinders from unexpectedly retracting and lowering the header. For instructions, refer to your combine operator's manual.

DANGER

To avoid bodily injury or death from unexpected start-up or fall of raised machine, always stop engine, remove key, and engage safety props before going under header for any reason.

3.2.2 Reel Safety Props

The reel safety props are located on the reel support arms and prevent the reel from unexpectedly lowering.

WARNING

To prevent bodily injury from the fall of a raised reel, always engage the reel safety props before going under the raised reel for any reason.

IMPORTANT:

To prevent damage to the reel support arms, do **NOT** transport the header whilen the reel safety props are engaged.

Engaging Reel Safety Props

Engage the reel safety props whenever you intend to work on or around a raised reel. When engaged, the reel safety props prevent the reel from falling unexpectedly.

DANGER

To prevent bodily injury or death from the unexpected start-up of the machine, always stop the engine and remove the key from the ignition before making adjustments to the machine.

WARNING

To prevent bodily injury from the fall of a raised reel, always engage the reel safety props before going under the raised reel for any reason.

1. Raise the reel fully.
2. Shut down the engine, and remove the key from the ignition.
3. Move reel safety props (A) to the engaged position (as shown). **The prop MUST be placed on the top surface of raised lug (B), making contact with the cylinder mount, to ensure positive engagement.**
   NOTE:
   Keep pivot bolt (C) sufficiently tight so that the prop remains in the stored position when not in use, but can still be engaged using hand force.
4. Repeat the previous step on the opposite side of the header.

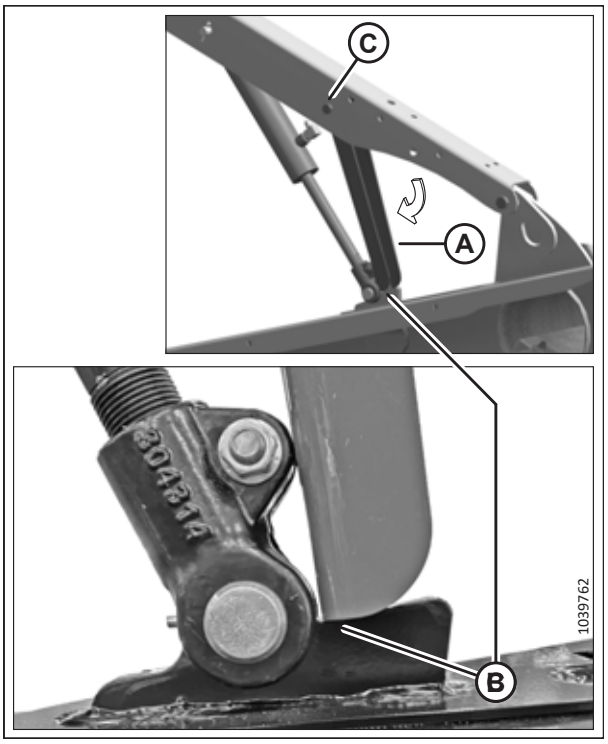

Figure 3.3: Engaged Reel Safety Prop – Left Shown

THE CONTENT ON THIS PAGE HAS CHANGED SINCE THIS MANUAL (215181 REVISION A) WAS PUBLISHED.

4. Use handle (A) to move lock rod to inboard position (B), which engages pin (C) under prop.
5. Lower reel until safety props contact the outer arm cylinder mounts and the center arm pins.

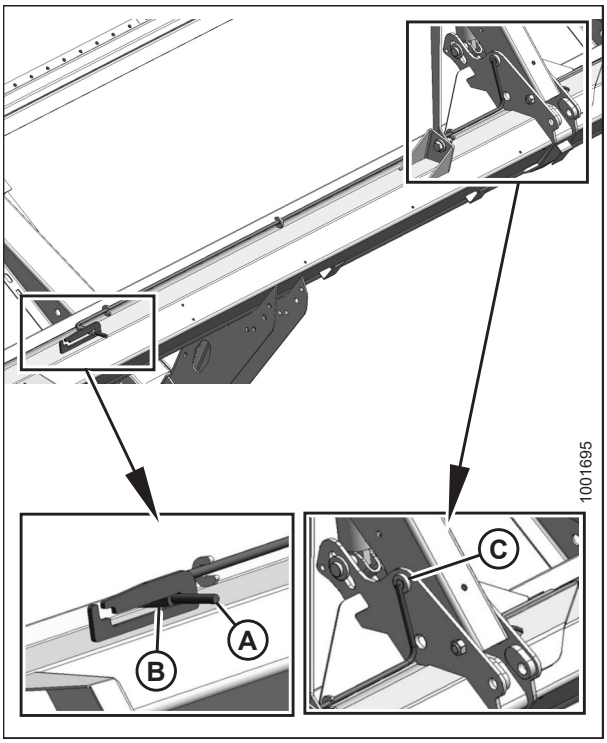

Figure 3.4: Reel Safety Prop – Center Arm

Disengaging Reel Safety Props

1. Raise the reel to its maximum height.
2. Move reel safety props (A) back inside the reel arms. Repeat at the opposite end of the reel.

   NOTE:

   The left safety prop is shown in the illustration at right. Right safety prop is opposite.

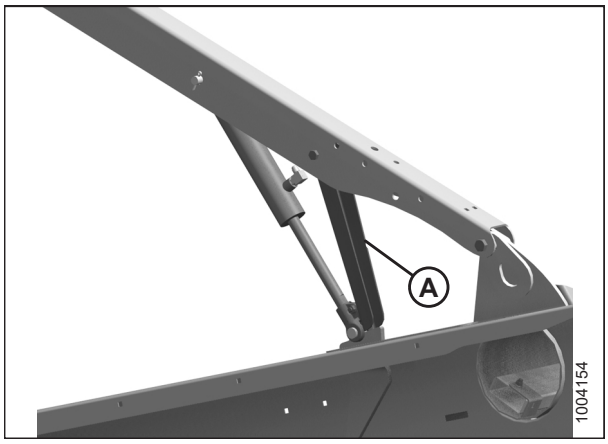

Figure 3.5: Reel Safety Prop

3. Use handle (B) on double-reel headers to move lock rod (A) to the outboard position.

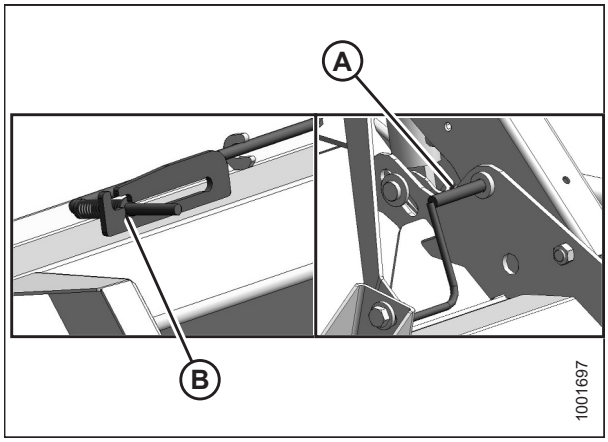

Figure 3.6: Reel Safety Prop – Center Arm

3.2.3 Header Endshields

A hinged, polyethylene endshield is fitted on each end of the header.

Opening Endshields

1. Push release lever (A) located on the backside of the endshield to unlock the shield.
2. Pull the endshield open using handle depression (B).

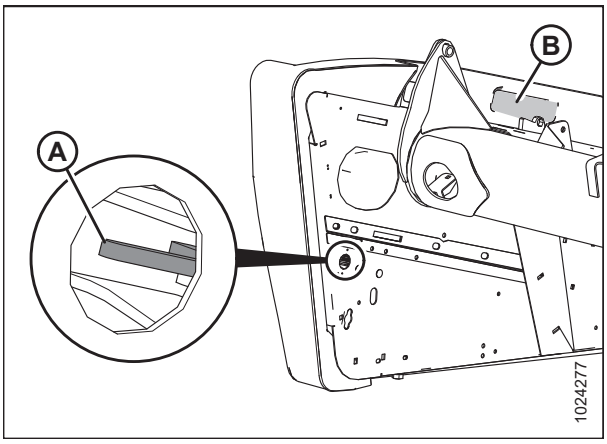

Figure 3.7: Left Endshield

3. Pull the endshield at handle depression (A). The endshield is retained by hinge tab (B) and will open in direction (C).

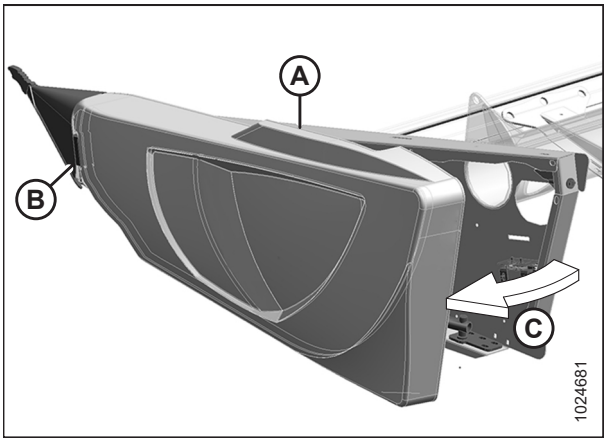

Figure 3.8: Left Endshield

4. If additional clearance is required, pull the endshield free of hinge tab (A) and swing the endshield toward the rear of the header.
5. Engage safety latch (B) on the hinge arm to secure the shield in the fully open position.

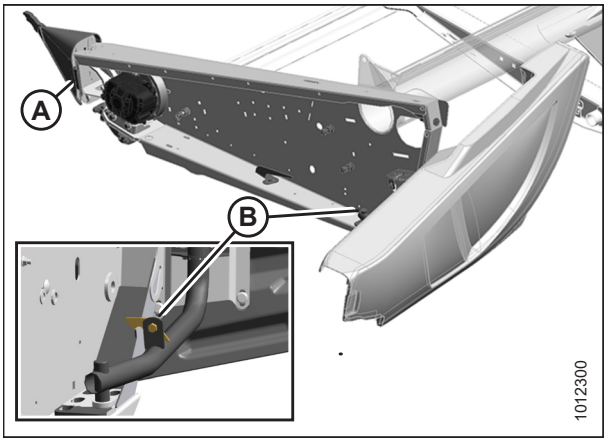

Figure 3.9: Left Endshield

Closing Endshields

1. Disengage lock (B) to allow the endshield to move.
2. Insert the front of the endshield behind hinge tab (A) and into the divider cone.

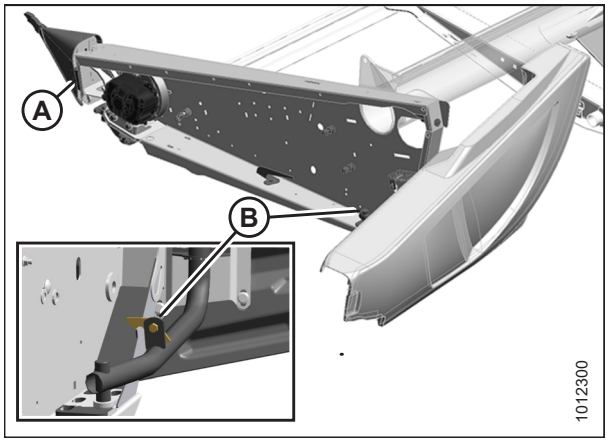

Figure 3.10: Left Endshield

3. Swing the endshield in direction (A) into its closed position. Engage the lock with a firm push.
4. Check that the endshield is locked.

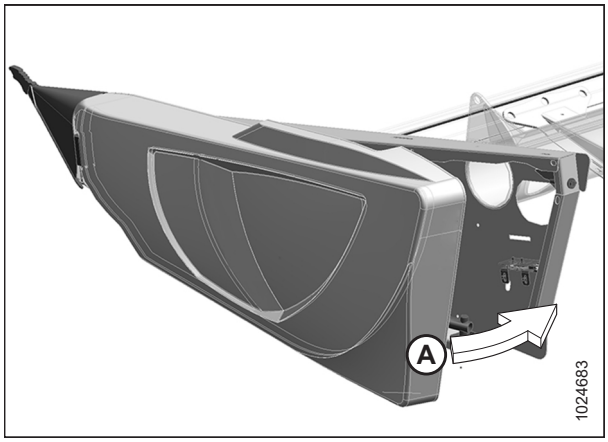

Figure 3.11: Left Endshield

Removing Endshields

1. Fully open the endshield. For instructions, refer to *Opening Endshields, page 37*.
2. Engage lock (A) to prevent endshield movement.
3. Remove self-tapping screw (B).
4. Slide endshield upwards and remove from hinge arm (C).
5. Place endshield away from work area.

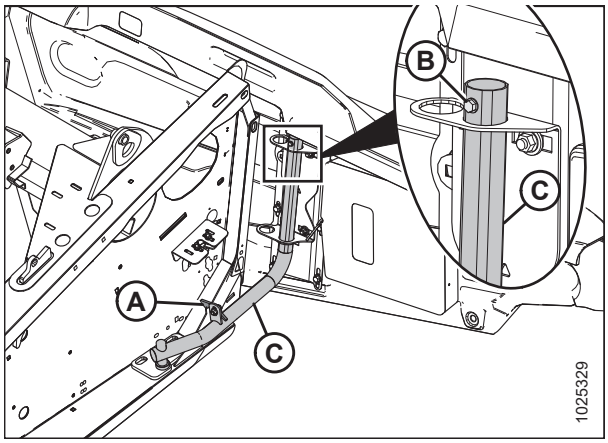

Figure 3.12: Left Endshield

Installing Endshields

1. Guide endshield onto hinge arm (C) and slowly slide it downwards.

   NOTE:

   Ensure hinge arm (C) is installed in the outboard hole on the hinge bracket, as shown in illustration at right.

2. Install self-tapping screw (B).
3. Disengage lock (A) to allow endshield movement.
4. Close the endshield. For instructions, refer to *Closing Endshields, page 38*.

   NOTE:

   Endshields may expand or contract when subjected to large temperature changes. The top pin and lower latch bracket positions can be adjusted to compensate for dimensional changes. For instructions, refer to *Checking and Adjusting Endshields, page 40*.

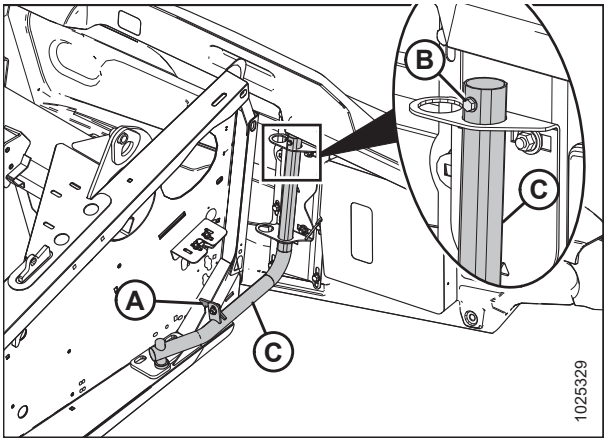

Figure 3.13: Left Endshield

Checking and Adjusting Endshields

Endshields are subject to expansion or contraction caused by large temperature variations. The position of the top pin and lower latch can be adjusted to compensate for dimensional changes.

Checking the endshield:

1. Check gap (X) between the front end of the shields and the header frame and compare to the values in Table *3.1, page 40*.

Table 3.1 Endshield Gap at Various Temperatures

Temperature in °C (°F)	Gap (X) mm (in.)
7 (45)	13–18 (1/2–23/32)
18 (65)	10–15 (3/8–19/32)
29 (85)	7–12 (9/32–15/32)
41 (105)	4–9 (5/32–11/32)

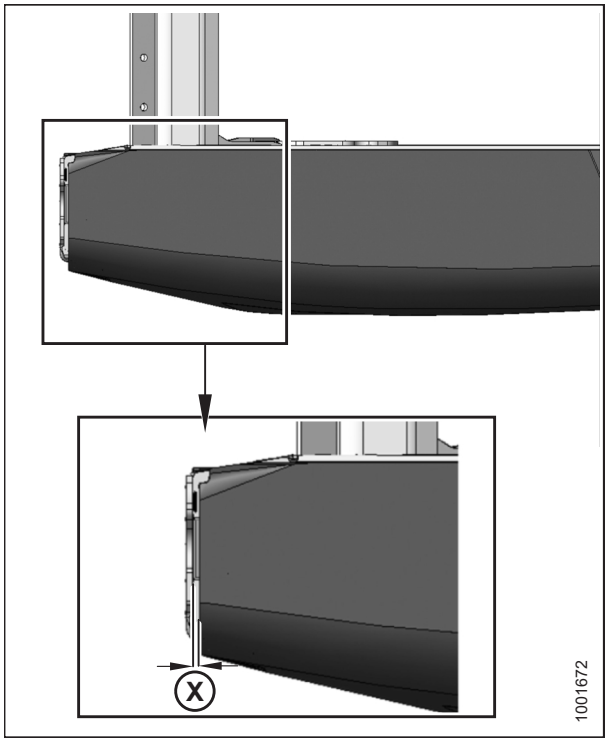

Figure 3.14: Gap between Endshield and Header Frame

Adjusting the endshield gap:

1. Loosen four bolts (A) on support tube bracket (B).

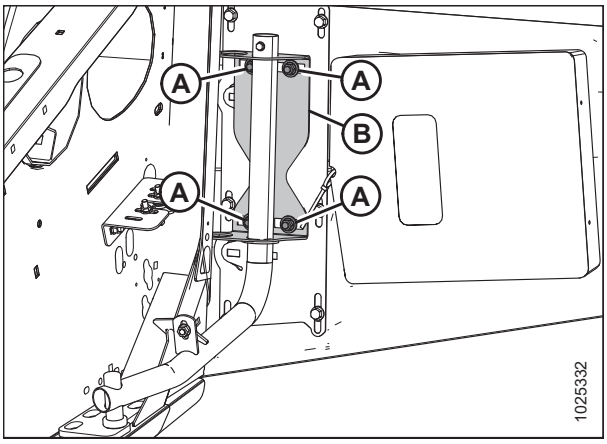

Figure 3.15: Left Endshield Support Tube

2. Loosen three bolts (A) on latch assembly (B).
3. Adjust latch assembly (B) to achieve the desired gap between the front end of the shield and the header frame. Refer to Table *3.1, page 40* for the recommended endshield gap at various temperatures.
4. Tighten three bolts (A) on the latch assembly to 27 Nm (20 lbf·ft).

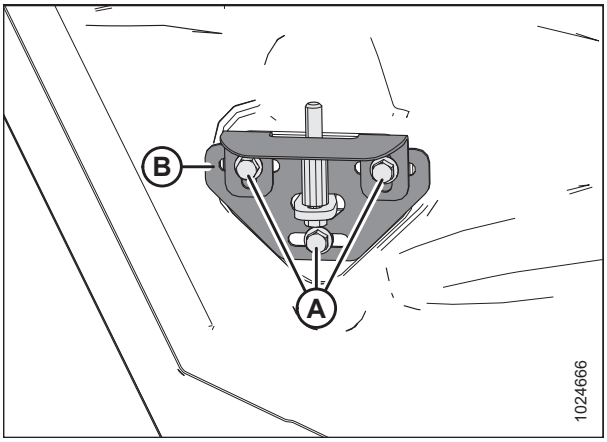

Figure 3.16: Left Endshield Latch Assembly

5. Tighten four bolts (A) on support tube bracket (B) to 31 Nm (23 lbf·ft).
6. Close endshield.

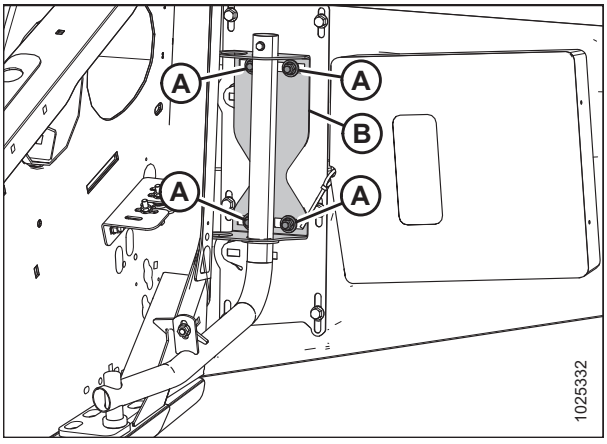

Figure 3.17: Left Endshield Support Tube

3.3 Daily Start-Up Check

CAUTION

- **Clear the area of other persons, pets, etc. Keep children away from machinery. Walk around the machine to be sure no one is under, on, or close to it.**
- **Wear close-fitting clothing and protective shoes with slip-resistant soles.**
- **Remove foreign objects from the machine and surrounding area.**
- **Carry with you any protective clothing and personal safety devices that could be necessary through the day. Do NOT take chances. You may need a hard hat, protective glasses or goggles, heavy gloves, a respirator or filter mask, or wet weather gear.**

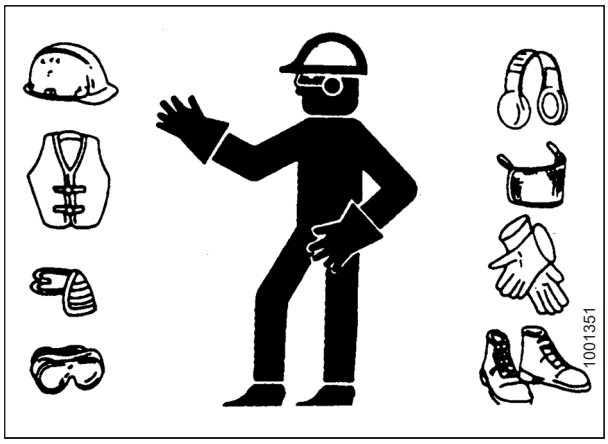

Figure 3.18: Safety Devices

- **Protect against noise. Wear a suitable hearing protective device such as ear muffs or ear plugs to protect against objectionable or uncomfortably loud noises.**

Complete the following tasks each day before start-up:

1. Check the machine for leaks and any parts that are missing, broken, or not working correctly.

   NOTE:

   Use proper procedure when searching for pressurized fluid leaks. For instructions, refer to *5.3.5 Checking Hydraulic Hoses and Lines, page 437*.

2. Clean all lights and reflective surfaces on the machine.
3. Perform all daily maintenance. For instructions, refer to *5.3.1 Maintenance Schedule/Record, page 432*.

3.4 Break-in Period

CAUTION

Before investigating an unusual sound or attempting to correct a problem, shut off engine and remove key.

NOTE:

Until you become familiar with the sound and feel of your new header, be extra alert and attentive.

After attaching the header to the combine for the first time, follow these steps:

1. Operate the machine with the reels, drapers, and knives running slowly for 5 minutes. Watch and listen **FROM THE OPERATOR'S SEAT** for binding or interfering parts.

   NOTE:

   Reels and side drapers will not operate until oil flow fills the lines.

2. Refer to *5.3.2 Break-In Inspection, page 435* and perform all specified tasks.

3.5 Shutting down the Combine

Before leaving the operator's seat for any reason, shut down the combine by following these steps:

DANGER

To avoid injury or death from unexpected start-up of machine, always stop the engine and remove the key from the ignition before leaving the operator’s seat for any reason.

1. Park on level ground whenever possible.
2. Lower the header fully.
3. Place all controls in NEUTRAL or PARK.
4. Disengage the header drive.
5. Lower and fully retract the reel.
6. Shut down the engine, and remove the key from the ignition.
7. Wait for all movement to stop.

3.6 Cab Controls

CAUTION

Be sure all bystanders are clear of machine before starting engine or engaging any header drives.

For instructions, refer to your combine operator's manual for identification of the following in-cab controls:

- Header engage/disengage control
- Header height
- Header angle
- Ground speed
- Reel speed
- Reel height
- Reel fore-aft position

3.7 Header Setup

3.7.1 Header Attachments

Several optional attachments that can improve your header's performance are available. Optional attachments can be ordered and installed by your MacDon Dealer. Refer to *6 Options and Attachments, page 623* for descriptions of available items.

3.7.2 Header Settings

The following tables provide a guideline for setting up the header; however, the suggested settings can be changed to suit various crops and conditions not covered in the tables.

For reel settings, refer to *3.7.4 Reel Settings, page 59*.

For FM100 auger configurations, refer to *3.8.1 FM100 Feed Auger Configurations, page 62*.

Table 3.2 Recommended D1 Series / FM100 Draper Header Settings for Cereals

Stubble Height	102 (<4)						
Stabilizer Wheels[3]	Storage						
Skid Shoe Position	Up or middle						
Crop Condition	**Divider Rods**	**Draper Speed Setting**[4]	**Header Angle**[5, 6]	**Reel Cam**	**Reel Speed %**[7]	**Reel Position**	**Upper Cross Auger**
Light	Off	8	B – C	3	10–15	6 or 7	Not required
Normal	On	7	B – C	2	10	6 or 7	Not required
Heavy	On	7	B – C	2	10	6 or 7	Recommended
Lodged	Off	7	B – C	3 or 4	5–10	4 or 5	Not required
Stubble Height	102–203 (4–8)						
Stabilizer Wheels	As required						
Skid Shoe Position	Down for lodged crop conditions, middle or down for other crop conditions						
Crop Condition	**Divider Rods**	**Draper Speed Setting**[4]	**Header Angle**[5, 6]	**Reel Cam**	**Reel Speed %**[7]	**Reel Position**	**Upper Cross Auger**
Light	Off	8	B – C	4	10–15	6 or 7	Not required
Normal	On	7	A	2	10	6 or 7	Not required
Heavy	On	7	A	2	10	6 or 7	Recommended
Lodged	Off	7	D	3 or 4	5–10	4 or 5	Not required

3. Stabilizer wheels are used to limit the side-to-side movement when cutting off the ground in rolling terrain and to minimize bouncing.
4. Setting on FM100 draper control.
5. Set header angle as shallow as possible (setting A) with center-link and skid shoes while maintaining cutting height.
6. Cutting height is controlled with a combination of skid shoes and header angle.
7. Percentage above ground speed.

Table 3.2 Recommended D1 Series / FM100 Draper Header Settings for Cereals (continued)

Stubble Height	203+ (8+)						
Stabilizer Wheels	As required						
Skid Shoe Position	Not applicable						
Crop Condition	**Divider Rods**	**Draper Speed Setting**[4]	**Header Angle**[5], [6]	**Reel Cam**	**Reel Speed %**[7]	**Reel Position**	**Upper Cross Auger**
Light	Off	8	A	4	10–15	6 or 7	Not required
Normal	On	7	A	2	10	6 or 7	Not required
Heavy	On	7	B – C	2	10	6 or 7	Not required
Lodged	Off	7	B – C	3 or 4	5–10	4 or 5	Not required

Table 3.3 Recommended D1 Series / FM100 Draper Header Settings for Lentils

Stubble Height	On ground						
Stabilizer Wheels[8]	Storage						
Skid Shoe Position	Up or middle						
Crop Condition	**Divider Rods**	**Draper Speed Setting**[9]	**Header Angle**[10, 11]	**Reel Cam**	**Reel Speed %**[12]	**Reel Position**	**Upper Cross Auger**
Light	On	8	B – C	2	5–10	6 or 7	Not required
Normal	On	7	B – C	2	10	6 or 7	Not required
Heavy	On	7	B – C	2	10	6 or 7	Not required
Lodged	On	7	D	2	5–10	6 or 7	Not required

8. Stabilizer wheels are used to limit the side-to-side movement when cutting off the ground in rolling terrain and to minimize bouncing.
9. Setting on FM100 draper control.
10. Set header angle as shallow as possible (setting A) with center-link and skid shoes while maintaining cutting height.
11. Cutting height is controlled with a combination of skid shoes and header angle.
12. Percentage above ground speed.

Table 3.4 Recommended D1 Series / FM100 Draper Header Settings for Peas

Stubble Height	On ground						
Stabilizer Wheels[13]	Storage						
Skid Shoe Position	Up or middle						
Crop Condition	**Divider Rods**	**Draper Speed Setting**	**Header Angle**[14, 15]	**Reel Cam**	**Reel Speed %**[16]	**Reel Position**	**Upper Cross Auger**
Light	On	7	B – C	2	5–10	6 or 7	Recommended
Normal	On	7	B – C	2	10	6 or 7	Recommended
Heavy	On	7	B – C	2	10	4 or 5	Recommended
Lodged	On	7	D	2	5–10	4 or 5	Recommended

13. Stabilizer wheels are used to limit the side-to-side movement when cutting off the ground in rolling terrain and to minimize bouncing.
14. Set header angle as shallow as possible (setting A) with center-link and skid shoes while maintaining cutting height.
15. Cutting height is controlled with a combination of skid shoes and header angle.
16. Percentage above ground speed.

Table 3.5 Recommended D1 Series / FM100 Draper Header Settings for Canola

Stubble Height	102–203 (4–8)						
Stabilizer Wheels[17]	As required						
Skid Shoe Position	Down for light or heavy crop conditions, middle or down for normal or lodged crop conditions						
Crop Condition	**Divider Rods**	**Draper Speed Setting**[18]	**Header Angle**[19, 20]	**Reel Cam**	**Reel Speed %**[21]	**Reel Position**	**Upper Cross Auger**
Light	On	7	A	2	5–10	6 or 7	Recommended
Normal	On	7	B – C	1	10	6 or 7	Recommended
Heavy	On	8	B – C	1	10	3 or 4	Recommended
Lodged	On	7	D	2	5–10	3 or 4	Recommended
Stubble Height	203+ (8+)						
Stabilizer Wheels[17]	As required						
Skid Shoe Position	Not applicable						
Crop Condition	**Divider Rods**	**Draper Speed Setting**[18]	**Header Angle**[19, 20]	**Reel Cam**	**Reel Speed %**[21]	**Reel Position**	**Upper Cross Auger**
Light	On	7	A	2	5–10	6 or 7	Recommended
Normal	On	7	B – C	2	10	6 or 7	Recommended
Heavy	On	8	B – C	1 or 2	10	3 or 4	Recommended
Lodged	On	7	D	2 or 3	5–10	3 or 4	Recommended

17. Stabilizer wheels are used to limit the side-to-side movement when cutting off the ground in rolling terrain and to minimize bouncing.
18. Setting on FM100 draper control.
19. Set header angle as shallow as possible (setting A) with center-link and skid shoes while maintaining cutting height.
20. Cutting height is controlled with a combination of skid shoes and header angle.
21. Percentage above ground speed.

Table 3.6 Recommended D1 Series / FM100 Draper Header Settings for California Rice

Stubble Height	102 (<4)						
Stabilizer Wheels[22]	Storage						
Skid Shoe Position	Up or middle						
Crop Condition	**Divider Rods**[23]	**Draper Speed Setting**[24]	**Header Angle**[25, 26]	**Reel Cam**	**Reel Speed %**[27]	**Reel Position**	**Upper Cross Auger**
Light	Rice divider rod	4	D	2	10–15	6 or 7	Not required
Normal	Rice divider rod	4	B – C	2	10	4 or 5	Not required
Heavy	Rice divider rod	4	B – C	2	10	4 or 5	Not required
Lodged	Rice divider rod	4	D	2	5–10	4 or 5	Not required
Stubble Height	102–203 (4–8)						
Stabilizer Wheels[22]	As required						
Skid Shoe Position	Middle or down						
Crop Condition	**Divider Rods**[23]	**Draper Speed Setting**[24]	**Header Angle**[25, 26]	**Reel Cam**	**Reel Speed %**[27]	**Reel Position**	**Upper Cross Auger**
Light	Rice divider rod	4	D	3	10–15	6 or 7	Not required
Normal	Rice divider rod	4	B – C	3	10	6 or 7	Not required
Heavy	Rice divider rod	4	B – C	3	10	6 or 7	Not required
Lodged	Rice divider rod	4	D	4	5–10	6 or 7	Not required

22. Stabilizer wheels are used to limit the side-to-side movement when cutting off the ground in rolling terrain and to minimize bouncing.
23. The rice divider rod is available. Rice divider rod not required on both ends of header.
24. Setting on FM100 draper control.
25. Set header angle as shallow as possible (setting A) with center-link and skid shoes while maintaining cutting height.
26. Cutting height is controlled with a combination of skid shoes and header angle.
27. Percentage above ground speed.

Table 3.6 Recommended D1 Series / FM100 Draper Header Settings for California Rice (continued)

Stubble Height	203+ (8+)						
Stabilizer Wheels[22]	As required						
Skid Shoe Position	Not applicable						
Crop Condition	**Divider Rods**[23]	**Draper Speed Setting**[24]	**Header Angle**[25], [26]	**Reel Cam**	**Reel Speed %**[27]	**Reel Position**	**Upper Cross Auger**
Light	Rice divider rod	4	A	3	10–15	6 or 7	Not required
Normal	Rice divider rod	4	B – C	3	10	6 or 7	Not required
Heavy	Rice divider rod	4	B – C	3	10	6 or 7	Not required
Lodged	Rice divider rod	4	D	4	5–10	6 or 7	Not required

Table 3.7 Recommended D1 Series / FM100 Draper Header Settings for Delta Rice

Stubble Height	51–152 (2–6)						
Stabilizer Wheels[28]	As required						
Skid Shoe Position	Middle or down						
Crop Condition	**Divider Rods**	**Draper Speed Setting**[29]	**Header Angle**[30, 31]	**Reel Cam**	**Reel Speed %**[32]	**Reel Position**	**Upper Cross Auger**
Light	Off	6	D	2 or 3	10–15	6 or 7	Not required
Normal	Off	6	B – C	2 or 3	10	6 or 7	Not required
Heavy	Off	6	B – C	2 or 3	10	6 or 7	Not required
Lodged	Off	6	D	3 or 4	5–10	4 or 5	Not required
Stubble Height	152+ (6+)						
Stabilizer Wheels[28]	As required						
Skid Shoe Position	Not applicable						
Crop Condition	**Divider Rods**	**Draper Speed Setting**[29]	**Header Angle**[30, 31]	**Reel Cam**	**Reel Speed %**[32]	**Reel Position**	**Upper Cross Auger**
Light	Off	6	A	2 or 3	10–15	6 or 7	Not required
Normal	Off	6	B – C	2 or 3	10	6 or 7	Not required
Heavy	Off	6	B – C	2 or 3	10	6 or 7	Not required
Lodged	Off	6	D	3 or 4	5–10	4 or 5	Not required

28. Stabilizer wheels are used to limit the side-to-side movement when cutting off the ground in rolling terrain and to minimize bouncing.
29. Setting on FM100 draper control.
30. Set header angle as shallow as possible (setting A) with center-link and skid shoes while maintaining cutting height.
31. Cutting height is controlled with a combination of skid shoes and header angle.
32. Percentage above ground speed.

Table 3.8 Recommended D1 Series / FM100 Draper Header Settings for Edible Beans

Stubble Height	On ground						
Stabilizer Wheels[33]	Storage						
Skid Shoe Position	Up or middle						
Crop Condition	**Divider Rods**	**Draper Speed Setting**[34]	**Header Angle**[35, 36]	**Reel Cam**	**Reel Speed %**[37]	**Reel Position**	**Upper Cross Auger**
Light	On	8	D	2	5–10	6 or 7	Not required
Normal	On	7	B – C	2	10	6 or 7	Not required
Heavy	On	7	B – C	2	10	6 or 7	Not required
Lodged	On	7	D	2	5–10	6 or 7	Not required

33. Stabilizer wheels are used to limit the side-to-side movement when cutting off the ground in rolling terrain and to minimize bouncing.
34. Setting on FM100 draper control.
35. Set header angle as shallow as possible (setting A) with center-link and skid shoes while maintaining cutting height.
36. Cutting height is controlled with a combination of skid shoes and header angle.
37. Percentage above ground speed.

Table 3.9 Recommended D1 Series / FM100 Draper Header Settings for Flax

Stubble Height	51–153 (2–6)						
Stabilizer Wheels[38]	As required						
Skid Shoe Position	Down for lodged crop conditions, middle or down for other crop conditions						
Crop Condition	**Divider Rods**	**Draper Speed Setting**[39]	**Header Angle**[40, 41]	**Reel Cam**	**Reel Speed %**[42]	**Reel Position**	**Upper Cross Auger**
Light	On	8	B – C	2	5–10	6 or 7	Not required
Normal	On	7	A	2	10	6 or 7	Not required
Heavy	On	7	B – C	2	10	6 or 7	Not required
Lodged	On	7	D	2	5–10	6 or 7	Not required

38. Stabilizer wheels are used to limit the side-to-side movement when cutting off the ground in rolling terrain and to minimize bouncing.
39. Setting on FM100 draper control.
40. Set header angle as shallow as possible (setting A) with center-link and skid shoes while maintaining cutting height.
41. Cutting height is controlled with a combination of skid shoes and header angle.
42. Percentage above ground speed.

3.7.3 Optimizing Header for Straight Combining Canola

Ripe canola can be straight combined, but most varieties are very susceptible to shelling and subsequent seed loss. This section provides recommended attachments, settings, and adjustments to optimize D1 Series Draper Headers for straight combining canola.

Recommended attachments

The optimization includes the following modifications to the header:

- Installing a full-length upper cross auger
- Installing vertical knives
- Installing short center reel braces

NOTE:

Each kit includes installation instructions and the necessary hardware. For more information, refer to *6 Options and Attachments, page 623*.

Recommended settings

Optimizing the header requires adjustments to the following settings:

- Moving the reel fore-aft cylinders to the alternative aft location. For instructions, refer to *Repositioning Fore-Aft Cylinders on Double Reel, page 126* or *Repositioning Fore-Aft Cylinders on Single Reel, page 124*.
- Adjusting reel fore-aft position. For instructions, refer to *Adjusting Reel Fore-Aft Position, page 123*.
- Adjusting reel height so that fingers just engage the crop. For instructions, refer to *3.8.9 Reel Height, page 117*.
- Setting reel cam to position 1. For instructions, refer to *Adjusting Reel Cam, page 138*.
- Setting reel speed equal to ground speed and increase as required. For instructions, refer to *3.8.5 Reel Speed, page 109*.
- Set the side draper speed to position nine on FM100 control valve. For instructions, refer to *3.8.7 Draper Speed, page 112*.
- Set auger to floating position. For instructions, refer to *3.8.14 Setting Auger Position, page 146*.
- Loosen auger spring tension. For instructions, refer to *Checking and Adjusting Feed Auger Springs, page 58*.

Checking and Adjusting Feed Auger Springs

The feed auger has an adjustable spring tensioning system that allows the auger to float on top of the crop instead of crushing and damaging it. The factory-set tension is adequate for most crop conditions.

DANGER

To avoid bodily injury or death from unexpected start-up or fall of raised machine, always stop engine, remove key, and engage safety props before going under header for any reason.

1. Raise the header to its full height.
2. Shut down the engine, and remove the key from the ignition.
3. Engage the header lift cylinder safety props.
4. At the left back corner of the header, check the thread length protruding past nut (A). Length should be 22–26 mm (7/8–1 in.).

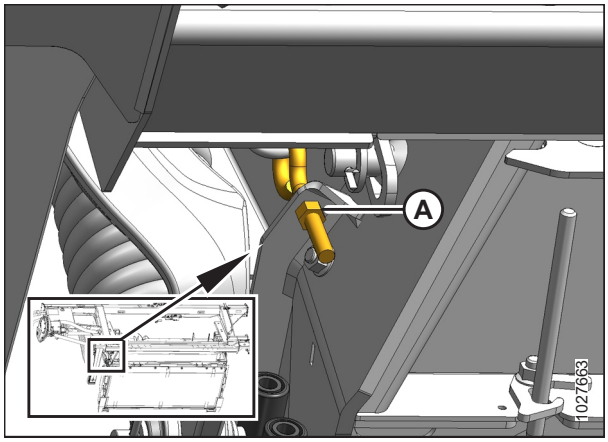

Figure 3.19: Spring Tensioner

If adjustment is required, follow these steps:

1. Loosen upper jam nut (A) on the spring tensioner.
2. Turn lower nut (B) until thread (C) protrudes 22–26 mm (7/8–1 in.).
3. Tighten jam nut (A).
4. Repeat Steps *1, page 58* to *3, page 58* on opposite side.

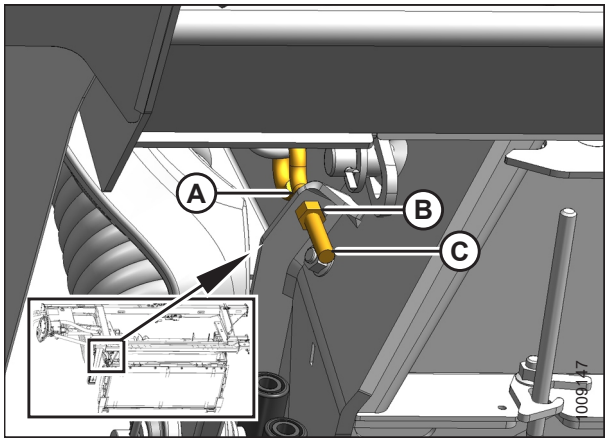

Figure 3.20: Spring Tensioner

3.7.4 Reel Settings

Table 3.10 D1 Series Recommended Reel Settings

Cam Setting Number (Finger Speed Gain)	Reel Position Number	Reel Finger Pattern
1 (0)	6 or 7	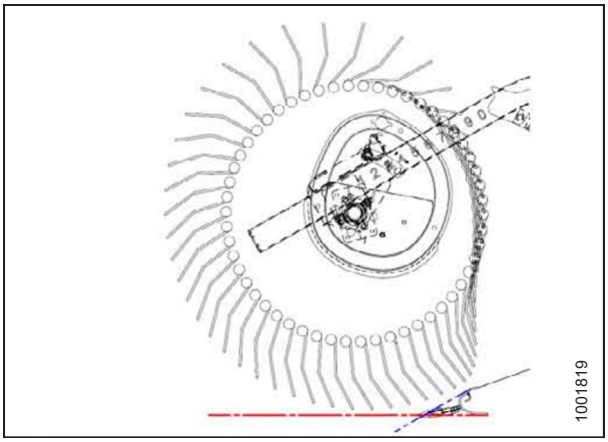
2 (20%)	3 or 4	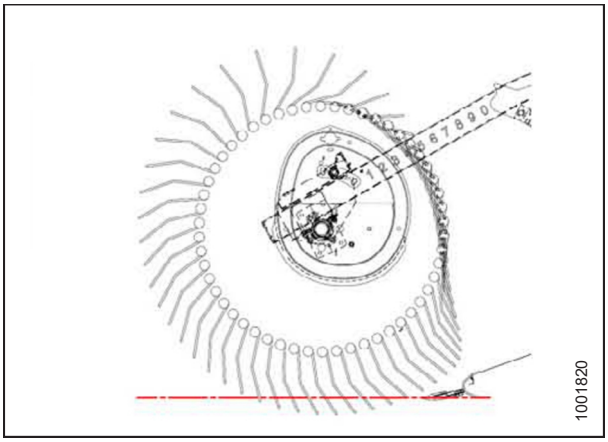

Table 3.10 D1 Series Recommended Reel Settings (continued)

Cam Setting Number (Finger Speed Gain)	Reel Position Number	Reel Finger Pattern
3 (30%)	6 or 7	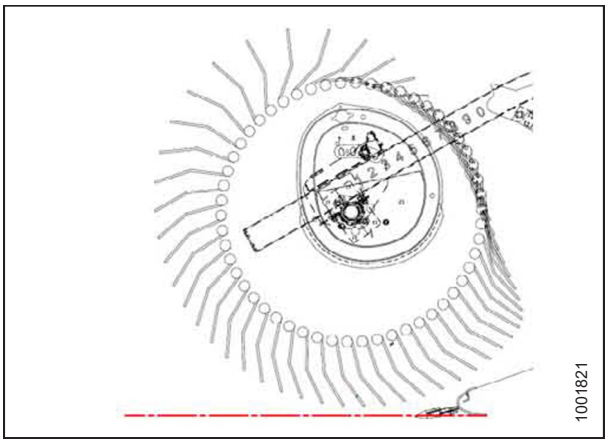
4 (35%)	2 or 3	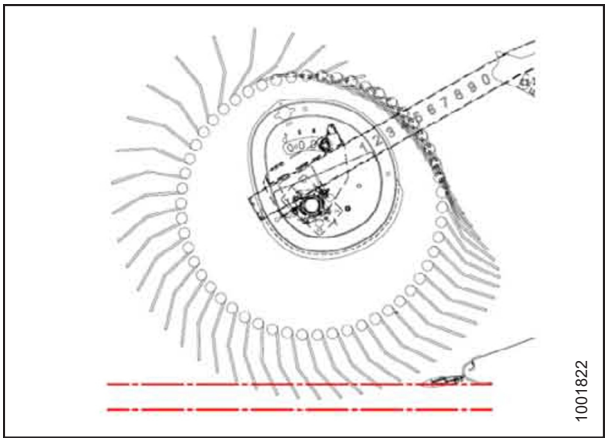

NOTE:

- Adjust the reel forward to get closer to the ground while tilting the header back. Fingers/tines will dig into the ground at extreme reel-forward positions, so adjust the skid shoes or header angle to compensate. Adjust the reel rearward to position the reel farther away from the ground when tilting the header forward.
- Header tilt can be increased to position the reel closer to the ground, or decreased to position the reel farther from the ground, while keeping material flowing onto drapers.
- To leave the maximum amount of stubble in lodged crop, raise the header and increase the header tilt to keep the reel close to the ground. Position the reel fully forward.
- The reel may have to be moved back to prevent lumps or plugging on the cutterbar in thinner crops.
- Minimum crop carrying capacity (minimum area of exposed draper between the reel and the header backsheet) occurs with the reel in the farthest aft position.
- Maximum crop carrying capacity (maximum area of exposed draper between the reel and the header backsheet) occurs with the reel in the farthest forward position.
- Due to the nature of the cam action, the tip speed of the fingers/tines at the cutterbar becomes higher than that of the reel speed at higher cam settings. For more information, refer to Table *3.10, page 59*.

3.8 Header Operating Variables

Satisfactory function of the header in all situations requires making proper adjustments to suit various crops and conditions.

Correct operation reduces crop loss and increases productivity. As well, proper adjustments and timely maintenance will increase the length of service you receive from your machine.

The variables listed in Table *3.11, page 61* and detailed on the following pages will affect the performance of your header.

You will quickly become adept at adjusting the machine to achieve the results you desire. Most of the adjustments have been preset at the factory, but the settings can be changed to suit crop conditions.

Table 3.11 Operating Variables

Variable	Refer to
Cutting height	*Cutting off the Ground, page 87*; *Cutting on the Ground, page 92*
Header float	*3.8.3 Header Float, page 94*
Header angle	*3.8.4 Header Angle, page 101*
Reel speed	*3.8.5 Reel Speed, page 109*
Ground speed	*3.8.6 Ground Speed, page 111*
Reel height	*3.8.9 Reel Height, page 117*
Reel fore-aft position	*3.8.10 Reel Fore-Aft Position, page 123*
Reel tine pitch	*3.8.11 Reel Tine Pitch, page 136*
Crop divider rods	*3.8.12 Crop Dividers, page 139*
Feed auger configurations	*3.8.1 FM100 Feed Auger Configurations, page 62*

3.8.1 FM100 Feed Auger Configurations

The FM100 feed auger can be configured to suit various crop conditions; there are five configurations available.

NOTE:

Dimensions (A) and (B) are the same for both ends of the auger. They should be within 15 mm (9/16 in.) of the numbers given.

Narrow configuration is a standard configuration for the following combines:

- AGCO IDEAL™ Series
- Gleaner R6/75, R6/76, S6/77, S6/7/88, S96/7/8
- New Holland CR 920/940/960, 9020/40/60/65, 6090/7090, 8060/8070/8080

Narrow configuration uses 4 long bolt-on flightings (2 on the left and 2 on the right) and 18 feed auger fingers are recommended.

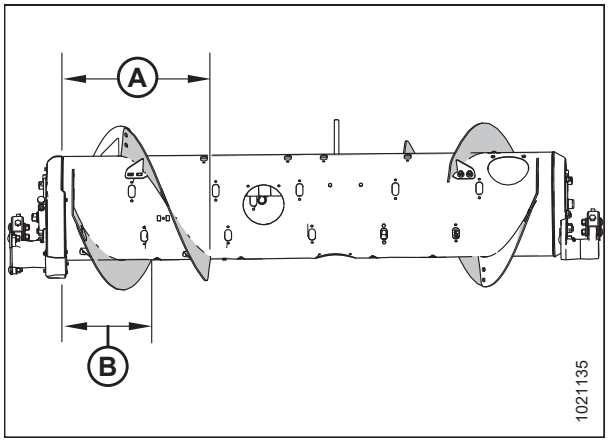

Figure 3.21: Narrow Configuration – Rear View

A - 514 mm (20 1/4 in.) **B - 356 mm (14 in.)**

To convert to Narrow configuration from Medium or Wide configuration, refer to *Converting from Medium Configuration or Wide Configuration to Narrow Configuration, page 72*.

To convert to Narrow configuration from Ultra Narrow configuration, refer to *Converting from Ultra Narrow Configuration to Narrow Configuration, page 75*.

NOTE:

Dimensions (A) and (B) are the same for both ends of the auger. They should be within 15 mm (9/16 in.) of the numbers given.

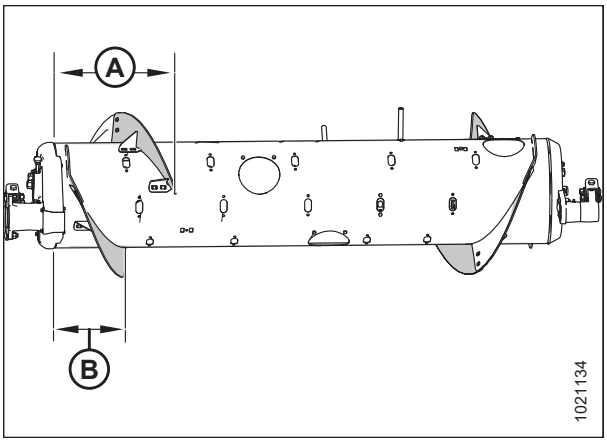

Figure 3.22: Medium Configuration – Rear View

A - 410 mm (16 1/8 in.) **B - 260 mm (10 1/4 in.)**

Medium configuration is a standard configuration for the following combines:

- Case IH 2300/2500 Series
- Case IH 5/6/7088, 7/8010, 7/8/9120, 5/6/7130, 7/8/9230, 5/6/7140, 7/8/9240, 5/6/7150, 7/8/9250
- Challenger 66/67/680B, 54/560C, 54/560E
- CLAAS 56/57/58/590R, 57/58/595R, 62/63/64/65/66/670, 73/74/75/76/77/780, 7000/8000
- John Deere 95/96/97/9860, 95/96/97/9870, S65/66/67/68/690, T670, S76/77/78/790
- Massey Ferguson 96/97/9895, 9520/40/60, 9545/65, 9380
- New Holland CR 970/980, 9070/9080, 8090/9090, X.90, X.80, 10.80/10.90
- New Holland CX 8X0, 80X0, 8.X0, 8080/8090
- Rostselmash Torum 760/780
- Versatile RT490

Medium configuration is an optional configuration for AGCO IDEAL™ Series.

Medium configuration uses 4 short bolt-on flightings (2 on the left and 2 on the right) and 22 feed auger fingers are recommended.

To convert to Medium configuration from Narrow or Ultra Narrow configuration, refer to *Converting from Ultra Narrow Configuration or Narrow Configuration to Medium Configuration, page 67*.

To convert to Medium configuration from Wide configuration, refer to *Converting from Wide Configuration to Medium Configuration, page 70*.

NOTE:

Dimensions (A) and (B) are the same for both ends of the auger. They should be within 15 mm (9/16 in.) of the numbers given.

Wide configuration is an optional configuration for the following combines:

- Challenger 670B/680B, 540C/560C, 540E/560E
- CLAAS 590R/595R, 660/670, 760/770/780, 8000
- John Deere T670
- Massey Ferguson 9895, 9540, 9560, 9545, 9565, 9380
- New Holland CX 8X0, 80X0, 8.X0

Wide configuration uses 2 short bolt-on flightings (1 on the left and 1 on the right) and 30 feed auger fingers are recommended.

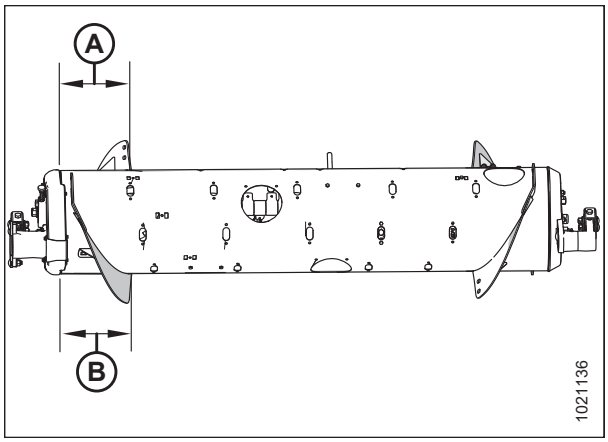

Figure 3.23: Wide Configuration – Rear View

A - 257 mm (10 1/8 in.) **B - 257 mm (10 1/8 in.)**

NOTE:

This configuration may increase combine capacity on wide feeder house combines in certain crop conditions.

To convert to Wide configuration from Medium configuration, refer to *Converting from Medium Configuration to Wide Configuration or Ultra Wide Configuration, page 76*.

To convert to Wide configuration from Ultra Narrow or Narrow configuration, refer to *Converting from Ultra Narrow or Narrow Configuration to Wide or Ultra Wide Configuration, page 78*.

NOTE:

Dimensions (A) and (B) are the same for both ends of the auger. They should be within 15 mm (9/16 in.) of the numbers given.

Ultra Narrow configuration is an optional configuration that may improve feeding performance on combines with narrow feeder houses. It may also be helpful when harvesting rice.

Ultra Narrow configuration uses 8 long bolt-on flightings (4 on the left and 4 on the right) and 18 auger fingers are recommended.

NOTE:

You will need to drill holes in the flighting and in the drum to install the extra flighting.

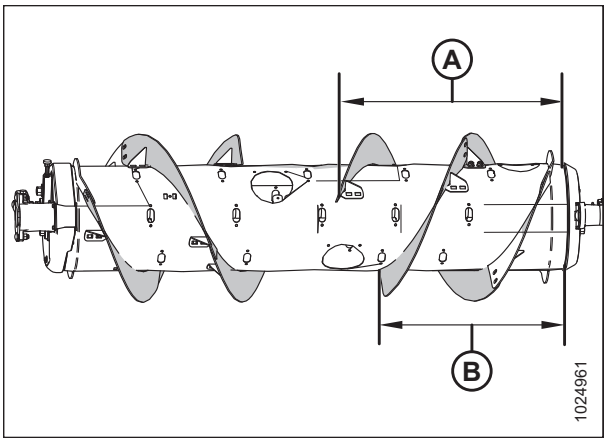

Figure 3.24: Ultra Narrow Configuration – Rear View

A - 760 mm (29 15/16 in.) **B - 602 mm (23 11/16 in.)**

To convert to Ultra Narrow configuration from Medium or Wide configuration, refer to *Converting from Medium Configuration or Wide Configuration to Ultra Narrow Configuration, page 81*.

To convert to Ultra Narrow configuration from Narrow configuration, refer to *Converting from Narrow Configuration to Ultra Narrow Configuration, page 85*.

Ultra Wide configuration is an optional configuration for the following combines:

- CLAAS 590R/595R, 660/670, 760/770/780/7000/8000

The Ultra Wide configuration uses no bolt on flighting; only the factory-welded flighting (A) is responsible for conveying the crop.

NOTE:

This configuration may improve feeding for wide feeder house combines.

A total of 30 auger fingers are recommended for this configuration.

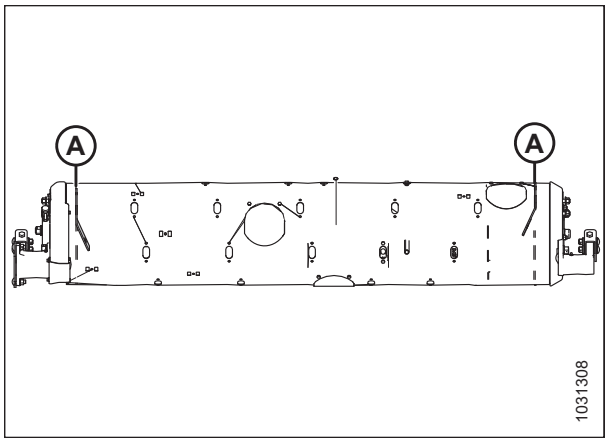

Figure 3.25: Ultra Wide Configuration – Rear View

To convert to Ultra Wide configuration from Medium configuration, refer to *Converting from Medium Configuration to Wide Configuration or Ultra Wide Configuration, page 76*.

To convert to Ultra Wide configuration from Ultra Narrow or Narrow configuration, refer to *Converting from Ultra Narrow or Narrow Configuration to Wide or Ultra Wide Configuration, page 78*.

To convert to Ultra Wide configuration from Wide configuration, refer to *Converting from Wide Configuration to Ultra Wide Configuration, page 80*.

Converting from Ultra Narrow Configuration or Narrow Configuration to Medium Configuration

Two flighting kits (MD #287031) are required to convert to this configuration.

Ultra Narrow, Narrow, and Medium auger configurations are shown at right. When converting from Ultra Narrow configuration or Narrow configuration to Medium configuration, you will need to replace long flightings (A) with short flightings (B).

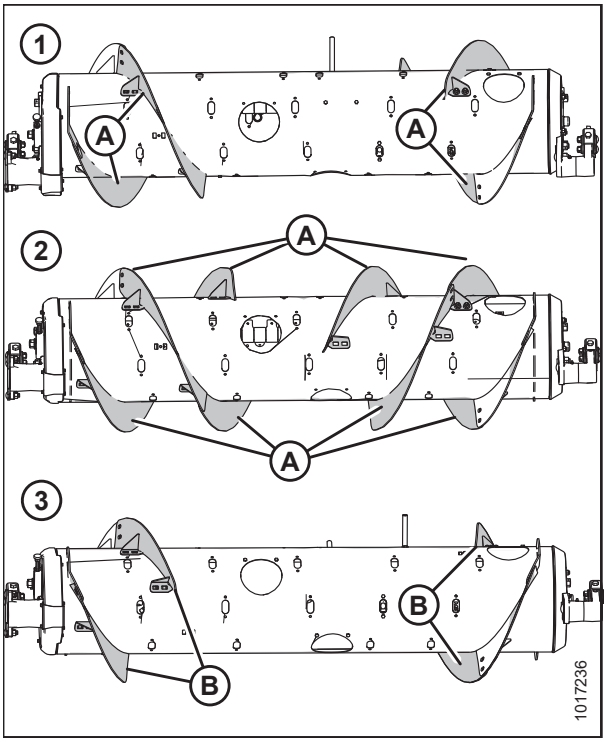

Figure 3.26: Auger Configurations – Rear View

1 - Narrow Configuration **2 - Ultra Narrow Configuration**
3 - Medium Configuration

NOTE:

Some parts have been removed from the illustrations for clarity.

1. To improve access and ease installation, remove the float module from the combine. For instructions, refer to *4 Header Attachment/Detachment, page 371*.
2. Remove bolts (A) and access cover (B) from each side of the auger. Retain for reassembly.

   NOTE:

   If necessary, remove multiple access covers.
3. Remove hardware (C) and bolt-on flighting (D). Repeat for all the remaining hardware and bolt-on flightings on the auger. Retain hardware to attach new flightings.

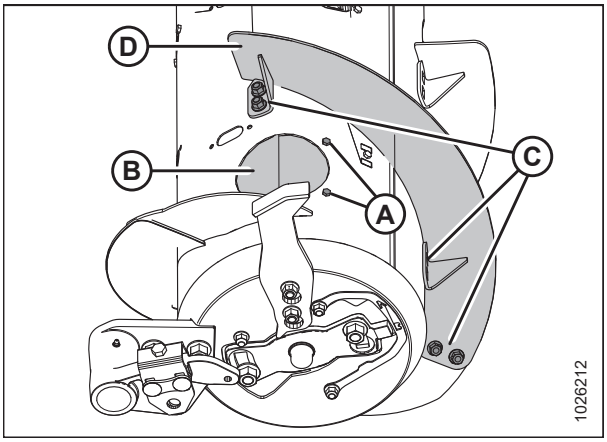

Figure 3.27: Narrow Configuration – Right Side

4. On both sides of the auger, remove M6 bolt (A), tee nut (not illustrated), and flighting slot plug (B) from inside the feed auger. Retain parts for installation.

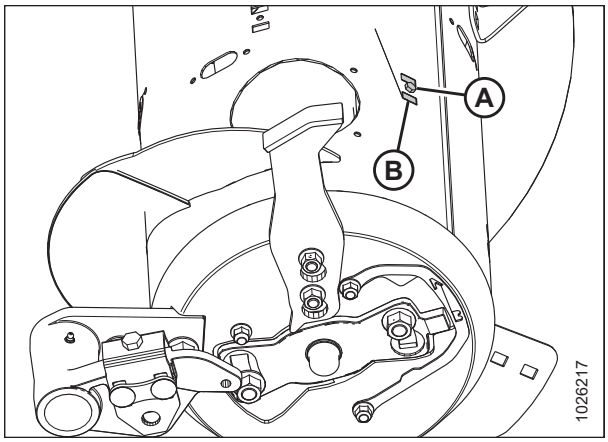

Figure 3.28: Narrow Configuration – Right Side

5. Install two bolt-on flightings (A) on the right side of the auger as shown, and secure each flighting with six retained carriage head bolts and nuts at locations (B).

   IMPORTANT:

   Flighting bolt heads must be installed on the inside of the auger to prevent damaging internal components.

   NOTE:

   Flighting performs best when no gaps are present. If desired, use silicone sealant to fill the gaps.

6. Torque all nuts and bolts to 47 Nm (35 lbf·ft) to eliminate deflection on flighting, then torque them to 58–64 Nm (43–47 lbf·ft).

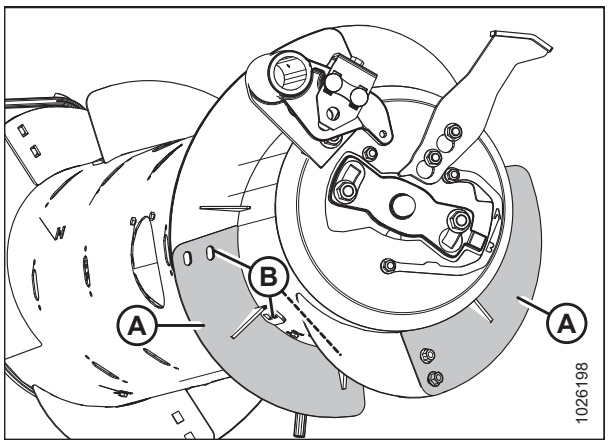

Figure 3.29: Medium Configuration – Right Side

7. Install two bolt-on flightings (A) on the left side of the auger as shown, and secure each flighting with six retained carriage head bolts and nuts at locations (B).

   IMPORTANT:

   Flighting bolt heads must be installed on the inside of the auger to prevent damaging internal components.

   NOTE:

   Flighting performs best when no gaps are present. If desired, use silicone sealant to fill the gaps.

8. Torque all nuts and bolts to 47 Nm (35 lbf·ft) to eliminate deflection on flighting, then torque them to 58–64 Nm (43–47 lbf·ft).

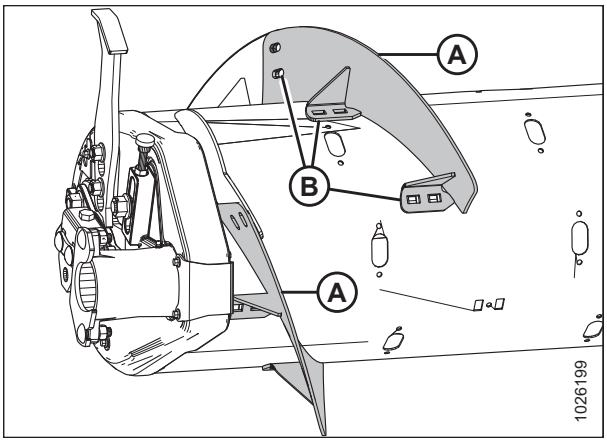

Figure 3.30: Medium Configuration – Left Side

9. Removing the long flightings left empty flighting slots in the auger that were not needed to install the new shorter flightings. Use access hole (A) to position a flighting slot plug (B) from inside the feed auger in each empty slot and secure with a 20 mm long M6 hex head bolt (C) and tee nut. Use plugs and hardware retained from a previous step.

10. Install additional auger fingers. A total of 22 auger fingers is recommended for this configuration. For instructions, refer to *Installing Feed Auger Fingers, page 476*.

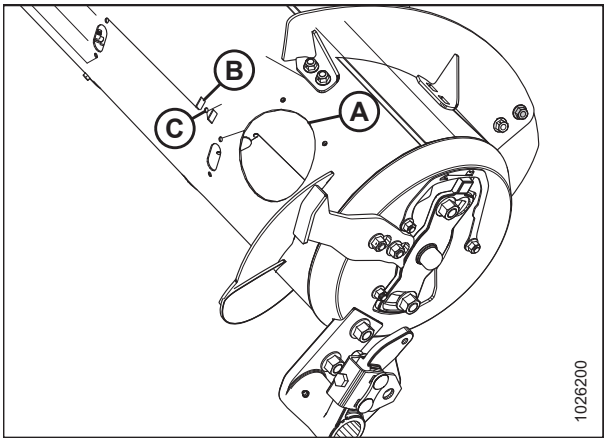

Figure 3.31: Medium Configuration Flighting Plug – Right Side

Converting from Wide Configuration to Medium Configuration

One flighting kit (MD #287031) is required to convert the feed auger from Wide configuration to Medium configuration.

Wide and Medium auger configurations are shown at right. When converting from Wide configuration to Medium configuration, you will need to install new flightings (A).

NOTE:

All illustrations show the feed auger separated from the float module for clarity. The procedure can be performed with the feed auger installed in the float module.

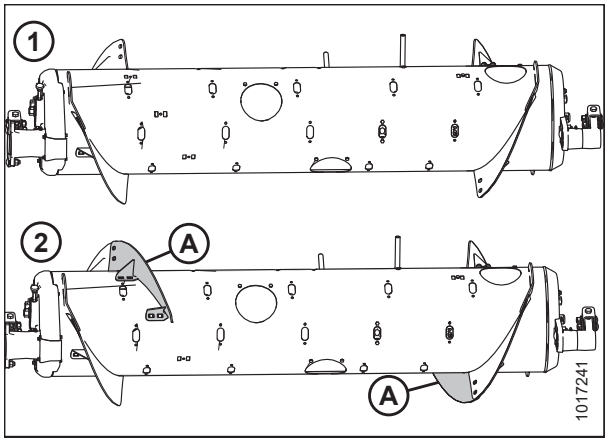

Figure 3.32: Auger Configurations – Rear View

1 - Wide Configuration **2 - Medium Configuration**

1. Improve access and ease installation by removing the float module from the combine. For instructions, refer to *4 Header Attachment/Detachment, page 371*.
2. Remove bolts (A) and remove access cover (B) from the right side of the auger. Retain for reassembly.

   NOTE:

   If necessary, remove multiple access covers.
3. Remove and discard two flighting slot plugs (C) from the right side of the auger.

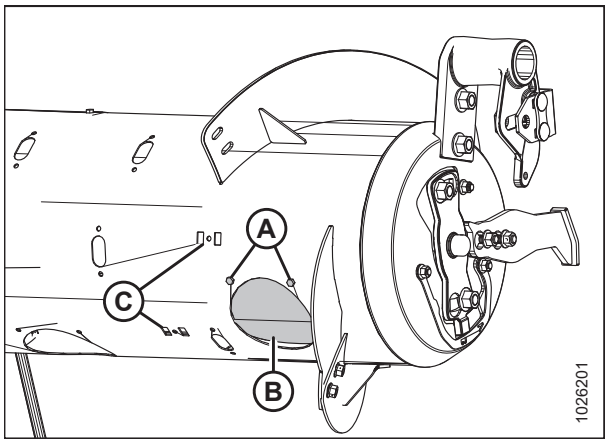

Figure 3.33: Wide Configuration – Right Side

4. Install bolt-on flighting (A) on the right side of the auger as shown, and secure with six carriage head bolts and six nuts at locations (B).

   IMPORTANT:

   Bolt heads must be installed on the inside of the auger to prevent damaging internal components.

   NOTE:

   Flighting performs best when no gaps are present. If desired, use silicone sealant to fill the gaps.

5. Torque all nuts and bolts to 47 Nm (35 lbf·ft) to eliminate deflection on flighting, then torque them to 58–64 Nm (43–47 lbf·ft).

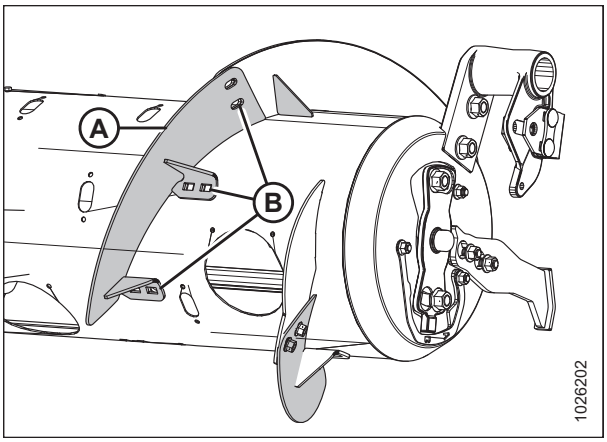

Figure 3.34: Medium Configuration – Right Side

6. Repeat Step *2, page 70* and Step *3, page 70* at the left side of auger.

7. Install bolt-on flighting (A) on the left side of the auger as shown, and secure with six carriage head bolts and six nuts at locations (B).

   IMPORTANT:

   Bolt heads must be installed on the inside of the auger to prevent damaging internal components.

   NOTE:

   Flighting performs best when no gaps are present. If desired, use silicone sealant to fill the gaps.

8. Torque all nuts and bolts (B) to 47 Nm (35 lbf·ft) to eliminate deflection on flighting, then torque them to 58–64 Nm (43–47 lbf·ft).

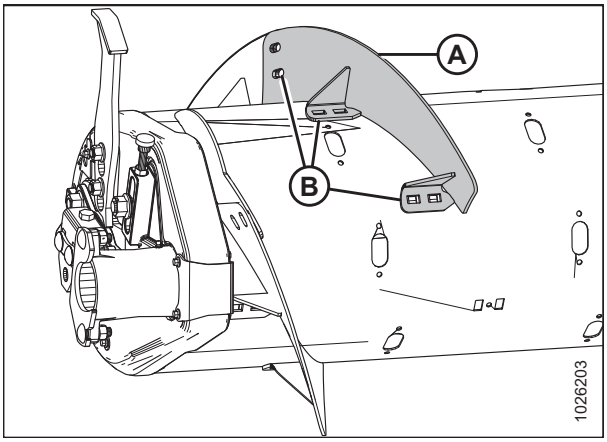

Figure 3.35: Medium Configuration – Left Side

9. Remove extra auger fingers. A total of 22 fingers are recommended for this configuration. For instructions, refer to *Removing Feed Auger Fingers, page 474*.

Converting from Medium Configuration or Wide Configuration to Narrow Configuration

Two flighting kits (MD #287032 or B6400[43]) are required to convert to this configuration. Extra hardware is included in these kits. Be sure to use the correct hardware in the correct location to prevent damage and to maximize performance.

Medium, Wide, and Narrow auger configurations are shown at right. When converting from Medium or Wide configuration to Narrow configuration, you will need to replace existing flightings (A) with flightings (B).

NOTE:

Flighting performs best when no gaps are present. If desired, use silicone sealant to fill the gaps.

NOTE:

All illustrations show the feed auger separated from the float module for clarity. The procedure can be performed with the feed auger installed in the float module.

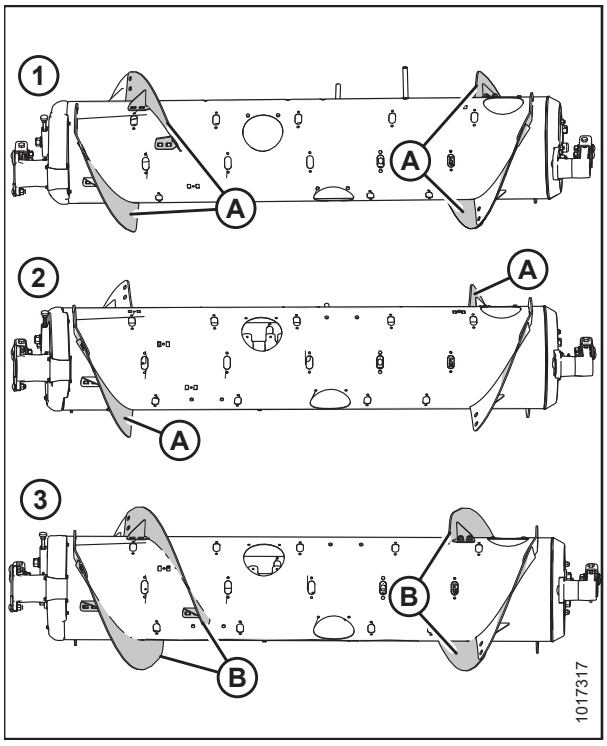

Figure 3.36: Auger Configurations – Rear View

1 - Medium Configuration **2 - Wide Configuration**
3 - Narrow Configuration

1. To improve access and ease installation, remove float module from combine. For instructions, refer to *4 Header Attachment/Detachment, page 371*.
2. Remove bolts (A) and access cover (B) from the right side of the auger. Retain for reassembly.
3. Remove hardware (C) and bolt-on flighting (D) from the auger.
4. Remove and discard flighting slot plug (E) located close to the end of flighting (D).
5. **Converting from Medium configuration:** Repeat above steps for the other flighting on the right side.

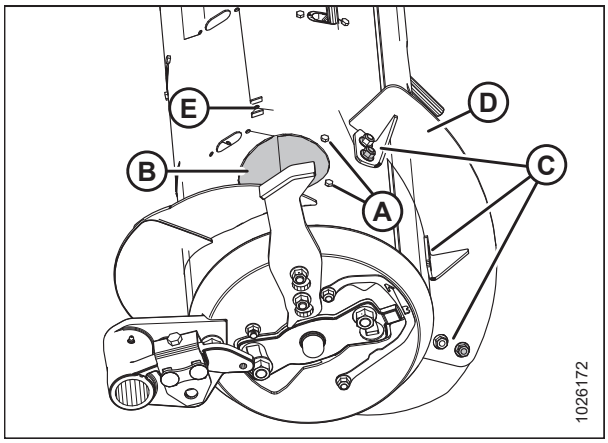

Figure 3.37: Wide Configuration – Right Side

43. MD #287032 is available only through MacDon Parts. B6400 is available only through Whole Goods. Both kits contain wear-resistant flightings.

6. **Converting from Wide configuration:** Remove bolts (A), access cover (B), and two flighting slot plugs (C) from the right side of the auger.
7. Repeat Steps *2, page 72* to *6, page 73* at the left side of the feed auger.

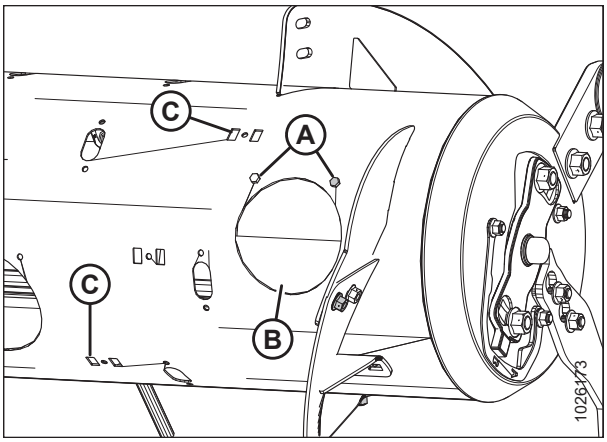

Figure 3.38: Wide Configuration – Right Side

8. Install two bolt-on flightings (A) on the right side as shown, and secure each flighting with six carriage head bolts (MD #136178) and nuts (MD #135799) at locations (B).

   IMPORTANT:

   Bolt heads must be installed on the inside of the auger to prevent damaging internal components.
9. Torque all nuts and bolts to 47 Nm (35 lbf·ft) to eliminate deflection on flighting, then torque them to 58–64 Nm (43–47 lbf·ft).
10. Install flighting slot plug (MD #213084) at location (C) from inside the auger and secure with an M6 hex head bolt (MD #252703) and tee nut (MD #197263). Repeat for the other flighting mounting locations.

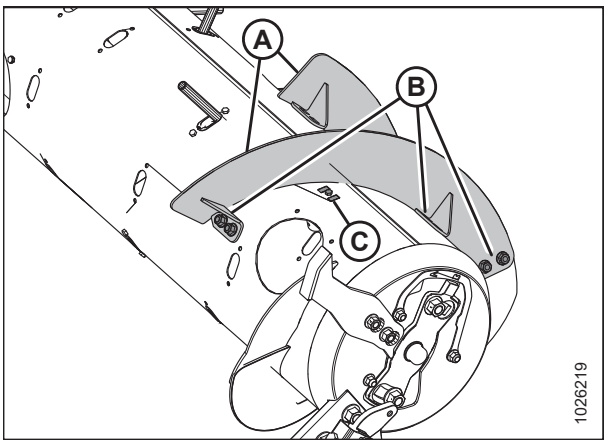

Figure 3.39: Narrow Configuration – Right Side

11. Install two bolt-on flightings (A) on the left side as shown, and secure each flighting with six carriage head bolts (MD #136178) and nuts (MD #135799) at locations (B).

    IMPORTANT:

    Bolt heads must be installed on the inside of the auger to prevent damaging internal components.

12. Torque all nuts and bolts to 47 Nm (35 lbf·ft) to eliminate deflection on flighting, then torque them to 58–64 Nm (43–47 lbf·ft).

13. Install flighting slot plug (C) (MD #213084) from inside the auger and secure with an M6 hex head bolt (MD #252703) and tee nut (MD #197263). Repeat for the other flighting mounting location used to mount the previous flighting in Step *3, page 72*.

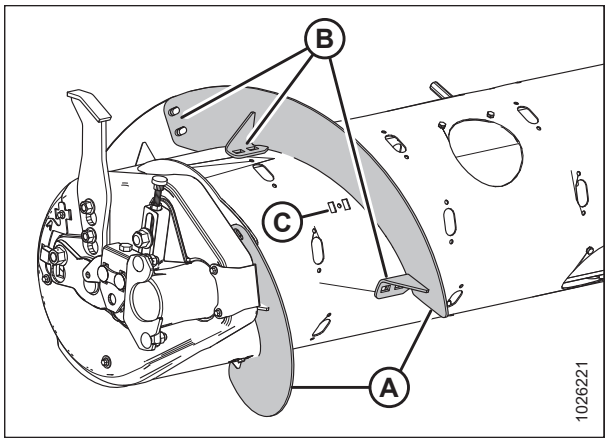

Figure 3.40: Narrow Configuration – Left Side

14. Remove extra auger fingers. A total of 18 fingers is recommended for this configuration. For instructions, refer to *Removing Feed Auger Fingers, page 474*.

Converting from Ultra Narrow Configuration to Narrow Configuration

The Ultra Narrow and Narrow auger configurations are shown at right. Existing flightings (A) are removed from the auger when converting to the Narrow configuration.

NOTE:

All illustrations show the feed auger separated from the float module for clarity. The procedure can be performed with the feed auger installed in the float module.

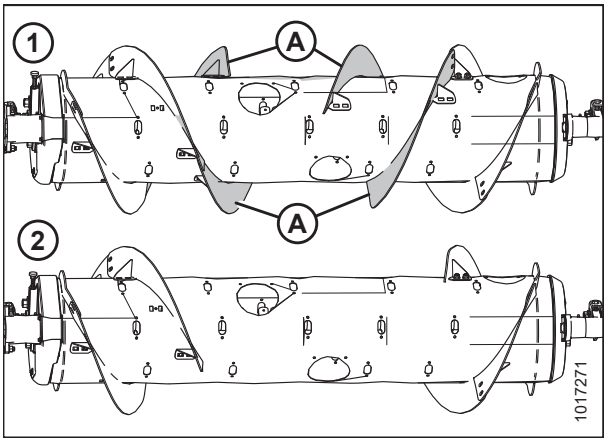

Figure 3.41: Auger Configurations – Rear View

1 - Ultra Narrow Configuration **2 - Narrow Configuration**

1. Improve access and ease installation by removing the float module from the combine. For instructions, refer to *4 Header Attachment/Detachment, page 371*.
2. Remove bolts (A) and access cover (B). Retain for reassembly.
3. Remove hardware from locations (C), and remove bolt-on flighting (D) from feed auger.
4. Repeat procedure for the remaining three inboard flightings.
5. Install additional auger fingers. A total of 18 fingers is recommended for this configuration. For instructions, refer to *Installing Feed Auger Fingers, page 476*.

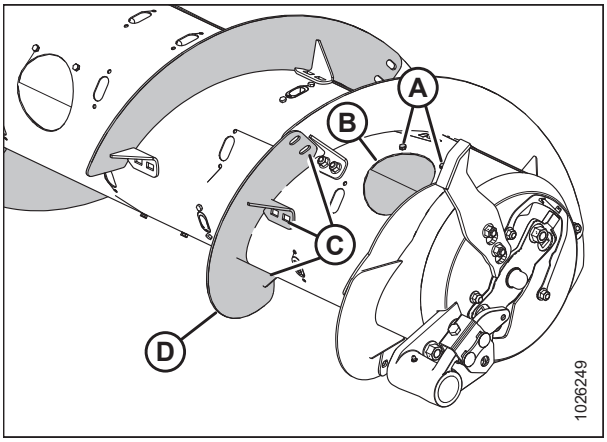

Figure 3.42: Ultra Narrow Configuration – Right Side

Converting from Medium Configuration to Wide Configuration or Ultra Wide Configuration

When converting from Medium configuration to Wide configuration, you will need to remove existing flightings (A) from the auger and add auger fingers. When converting from Medium configuration to Ultra Wide configuration, you will need to remove all existing bolt-on flightings (A) from the auger and add augur fingers.

Four flighting plugs (MD #213084), M6 hex head bolts (MD #252703), and M6 tee nuts (MD #197263) are needed to cover exposed flighting mounting holes after the flightings are removed. These parts can be ordered from a MacDon Dealer.

NOTE:

All illustrations show the feed auger separated from the float module for clarity. The procedure can be performed with the feed auger installed in the float module.

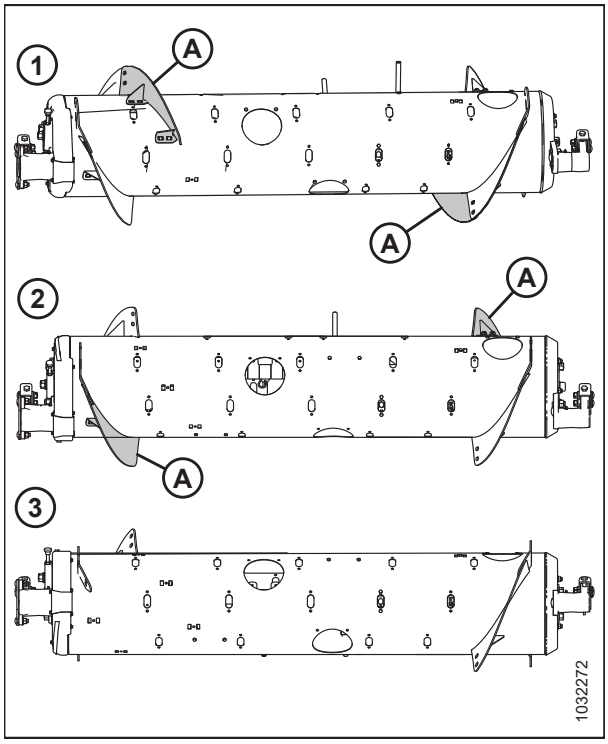

Figure 3.43: Auger Configurations – Rear View

1 - Medium Configuration **2 - Wide Configuration** **3 - Ultra Wide Configuration**

1. Improve access and ease installation by removing the float module from the combine. For instructions, refer to *4 Header Attachment/Detachment, page 371*.

   NOTE:

   Some parts have been removed from the illustrations for clarity.

To convert from Medium configuration to Wide configuration, follow these steps:

2. Remove bolts (A) and access cover (B). Retain for reassembly.
3. Remove hardware from locations (C), and remove bolt-on flighting (D) from the feed auger.

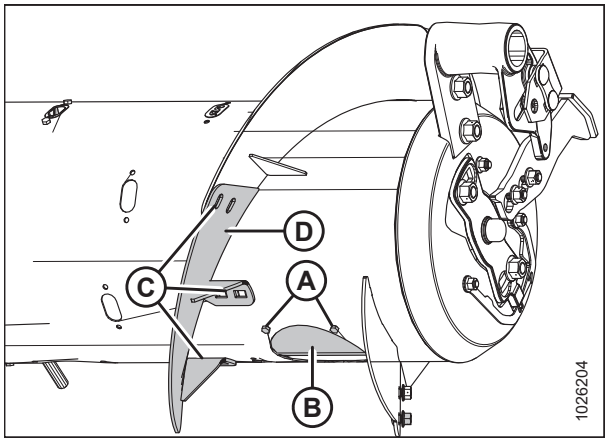

Figure 3.44: Right Side of Medium Configuration

4. Install flighting slot plug (A) (MD #213084) in the flighting slot from inside the auger. Secure with M6 hex head bolts (B) (MD #252703) and tee nuts (MD #197263).
5. Repeat above steps at the left side of the auger.
6. Install additional fingers. A total of 30 fingers are recommended for the Wide configuration. For instructions, refer to *Installing Feed Auger Fingers, page 476*.

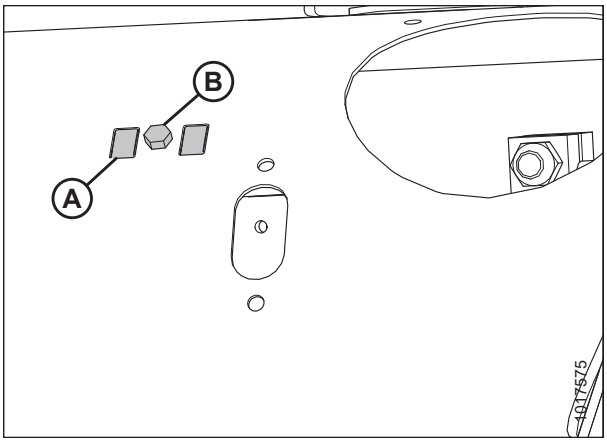

Figure 3.45: Right Side of Wide Configuration

To convert from Medium configuration to Ultra Wide configuration, follow these steps:

7. Remove bolts (A) and access cover (B). Retain for reassembly.
8. Remove hardware from locations (C), and remove all bolt-on flightings (D) from the feed auger.

   NOTE:

   Hardware on opposite side of auger indicated, but not shown in illustration.

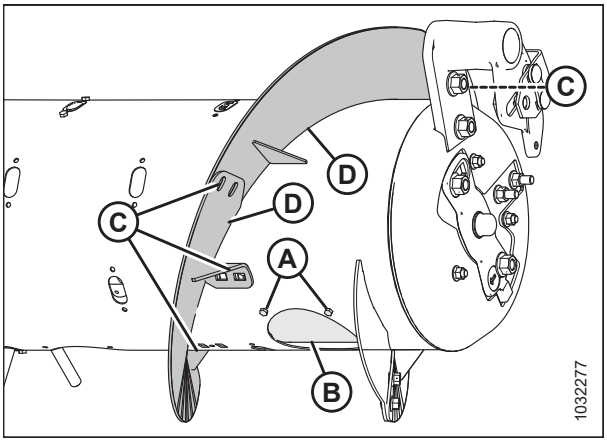

Figure 3.46: Right Side of Medium Configuration

9. Install flighting slot plug (A) (MD #213084) in the flighting slot from inside the auger. Secure with M6 hex head bolts (B) (MD #252703) and tee nuts (MD #197263).
10. Repeat above steps at the left side of the auger.
11. Install additional fingers. A total of 30 fingers are recommended for the Ultra Wide configuration. For instructions, refer to *Installing Feed Auger Fingers, page 476*.

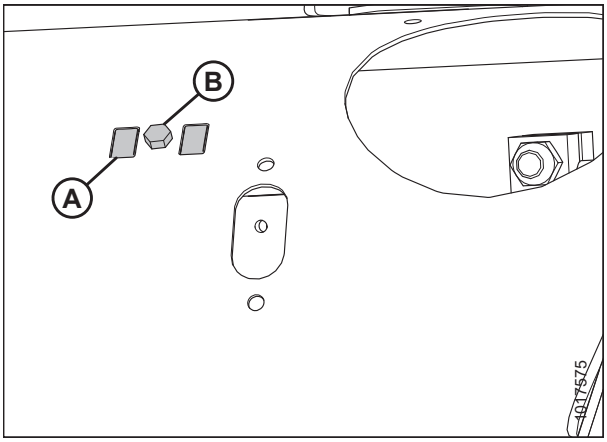

Figure 3.47: Right Side of Ultra Wide Configuration

Converting from Ultra Narrow or Narrow Configuration to Wide or Ultra Wide Configuration

One flighting kit (MD #287031) is required to convert to this configuration. Two flighting plugs (MD #213084), two M6 hex head bolts (MD #252703), and two M6 tee nuts (MD #197263) are recommended to close the flighting mounting locations. These parts can be ordered from a MacDon Dealer.

The Narrow, Ultra Narrow, Wide, and Ultra Wide auger configurations are shown at right. When converting from Narrow or Ultra Narrow configuration to Wide configuration, you will need to replace existing bolt-on flightings (A). When converting from Narrow or Ultra Narrow configuration to Ultra Wide configuration, you will be removing all bolt-on flighting.

NOTE:

All illustrations show the feed auger separated from the float module for clarity. The procedure can be performed with the feed auger installed in the float module.

NOTE:

Some parts have been removed from the illustrations for clarity.

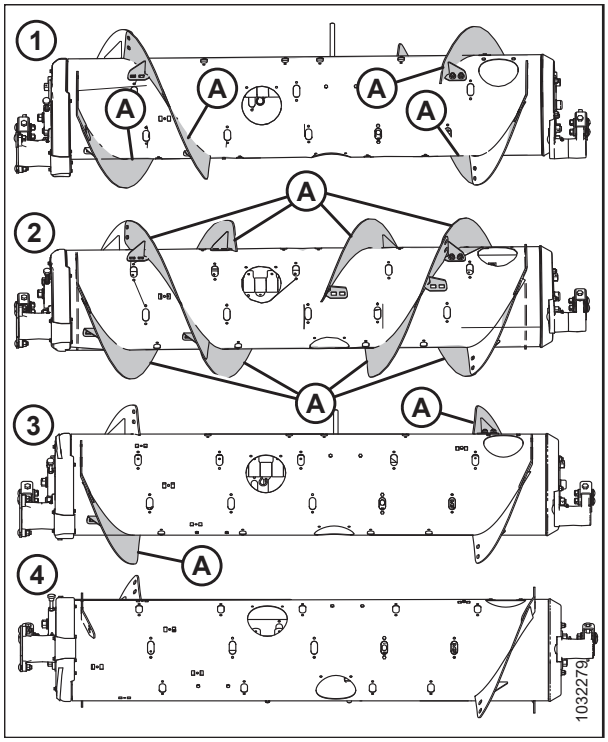

Figure 3.48: Auger Configurations – Rear View

1 - Narrow Configuration **2 - Ultra Narrow Configuration**
3 - Wide Configuration **2 - Ultra Wide Configuration**

1. Improve access and ease installation by removing the float module from the combine. For instructions, refer to *4 Header Attachment/Detachment, page 371*.
2. Remove bolts (A) and access cover (B) from the right side of the auger. Retain for reassembly.
3. Remove hardware (C) and bolt-on flighting (D) from the right side of the auger. If converting to the Wide configuration, discard the removed flighting, but retain hardware to attach the new flighting. If converting to the Ultra Wide configuration, the hardware may be discarded as well.

   NOTE:

   If converting to Ultra Wide configuration, hardware may be discarded as well.
4. Repeat Step *2, page 78* and Step *3, page 78* for the remaining bolt-on flighting(s) according to whether you are converting to Wide or Ultra Wide configuration.

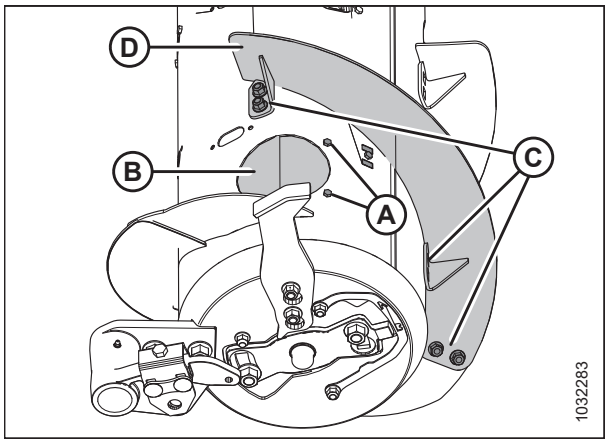

Figure 3.49: Narrow Configuration – Right Side

5. Remove flighting slot plug (A), bolt, and tee nut if converting your auger to the Wide configuration. Retain for reinstallation, and continue to Step *6, page 79*. Otherwise, leave plug (A), bolt, and tee nut in place on the auger and continue to Step *10, page 79* to complete the Ultra Wide conversion.

   NOTE:

   Only two flighting slot plugs (A) should be removed—one from each outboard side of the auger.

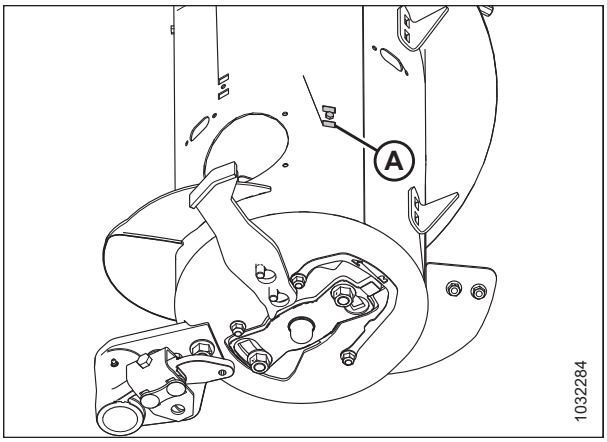

Figure 3.50: Narrow Configuration – Right Side

6. Install new bolt-on flighting (A) using six carriage head bolts and nuts (B) on the right side of the auger.

   IMPORTANT:

   Bolt heads must be installed on the inside of the auger to prevent damaging internal components.

7. Reinstall flighting slot plug (C) previously removed in Step *5, page 79*.

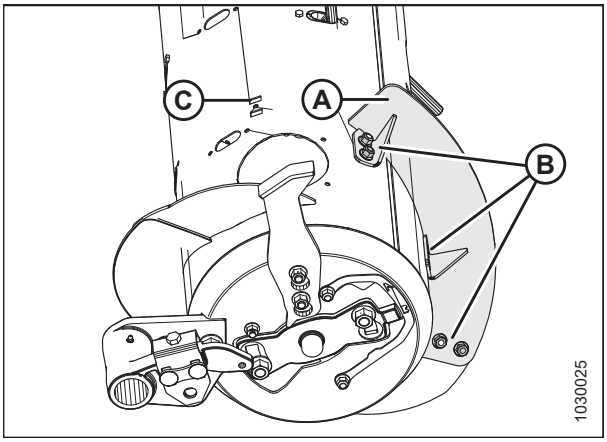

Figure 3.51: Wide Configuration – Right Side

8. Install new bolt-on flighting (A) on the left side of the auger using six carriage head bolts and nuts (B).

   IMPORTANT:

   Bolt heads must be installed on the inside of the auger to prevent damaging internal components.

9. Reinstall flighting slot plug (C) previously removed in Step *5, page 79*.
10. Install the remaining flighting slot plugs (MD #213084) using the M6 hex head bolts (MD #252703) and tee nuts (MD #197263) in locations previously used to mount removed flighting in Step *3, page 78* and Step *4, page 78*.
11. Install additional auger fingers. There should be a total of 30 fingers in this configuration. Auger fingers and all required parts are included in kit. For instructions, refer to *Installing Feed Auger Fingers, page 476*.

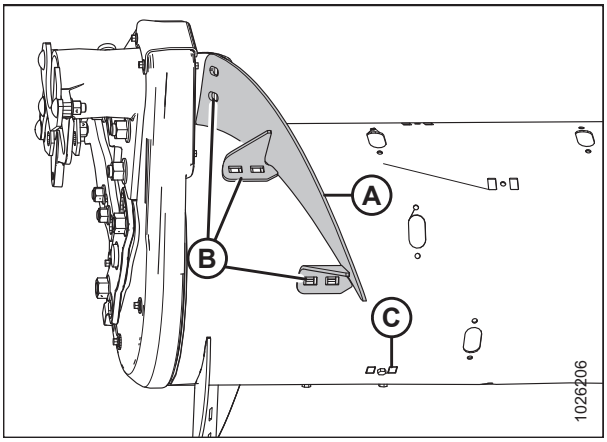

Figure 3.52: Wide Configuration – Left Side

Converting from Wide Configuration to Ultra Wide Configuration

In some conditions, feeding may be further improved by removing all bolt-on flightings (A). Four flighting plugs (MD #213084), M6 bolts (MD #252703), and M6 tee nuts (MD #197263) are recommended to cover the flighting mounting holes. These parts can be ordered from a MacDon Dealer.

NOTE:

All illustrations show the feed auger separated from the float module for clarity. The procedure can be performed with the feed auger installed in the float module.

NOTE:

Some parts have been removed from the illustrations for clarity.

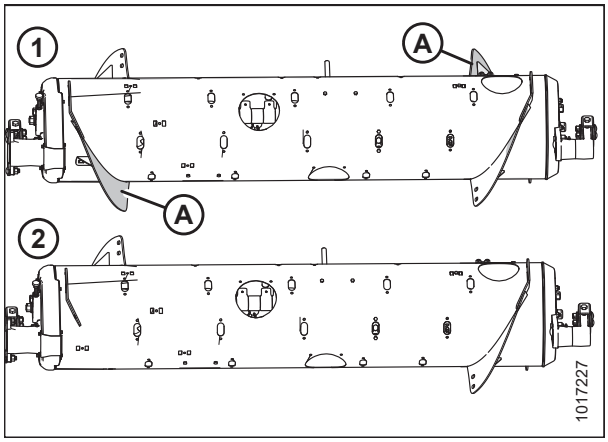

Figure 3.53: Auger Configurations – Rear View

1 - Wide Configuration **2 - Ultra Wide Configuration**

1. Improve access and ease installation by removing the float module from the combine. For instructions, refer to *4 Header Attachment/Detachment, page 371*.
2. Remove two bolts and access cover (A).
3. Remove hardware (B) and bolt-on flighting (C).
4. Install flighting slot plugs (MD #213084) in the flighting mounting locations (D) and secure with M6 bolts (MD #252703) and tee nuts (MD #197263).
5. Repeat all steps on the left side of the auger.
6. Install additional auger fingers. A total of 30 fingers are recommended for this configuration. For instructions, refer to *Installing Feed Auger Fingers, page 476*.

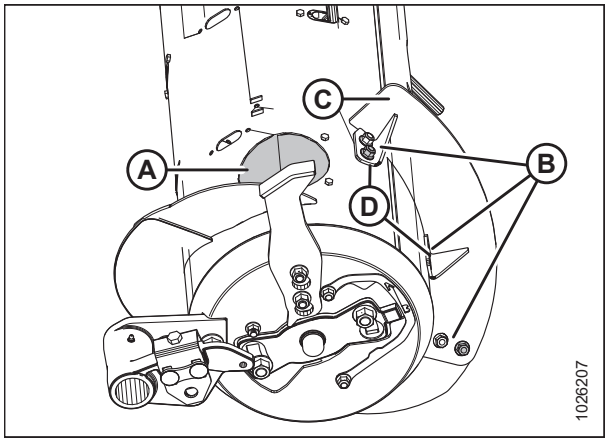

Figure 3.54: Wide Configuration – Right Side

Converting from Medium Configuration or Wide Configuration to Ultra Narrow Configuration

Four flighting kits (MD #287032 or B6400[44]) and some hole-drilling are required to convert to Ultra Narrow configuration. Extra hardware is included in these kits. Be sure to use the correct hardware in the correct location to prevent damage and to maximize performance.

Medium, Wide, and Ultra Narrow auger configurations are shown at right. When converting to Ultra Narrow configuration, existing flightings (A) are removed and new flightings (B) are installed.

NOTE:

All illustrations show the feed auger separated from the float module for clarity. The procedure can be performed with the feed auger installed in the float module.

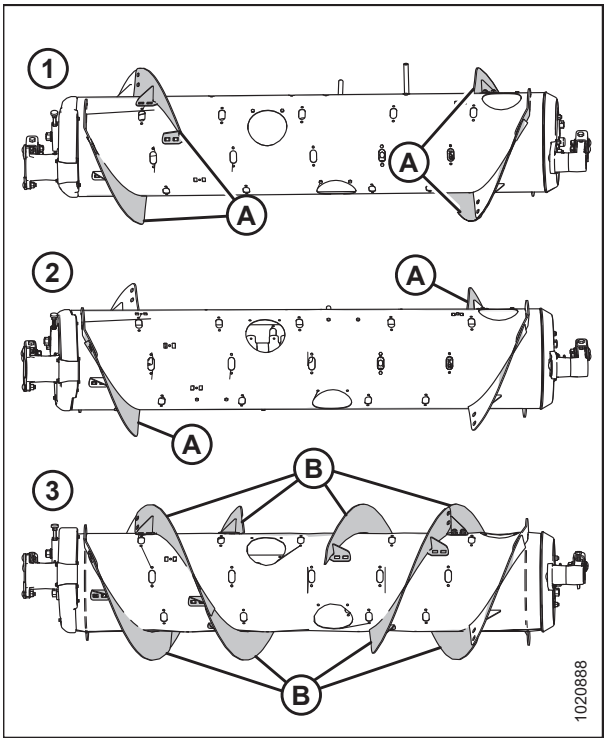

Figure 3.55: Auger Configurations – Rear View

1 - Medium Configuration **2 - Wide Configuration**
3 - Ultra Narrow Configuration

1. Improve access and ease installation by removing the float module from the combine. For instructions, refer to *4 Header Attachment/Detachment, page 371*.
2. Remove bolts (A) and access cover (B) from the right side of the auger. Retain for reassembly.
3. Remove hardware (C) and bolt-on flighting (D) from the auger.
4. Remove flighting slot plug (E) located close to the end of flighting (D).
5. **Converting from Medium configuration:** Repeat the previous steps for the other bolt-on flighting on the same side.

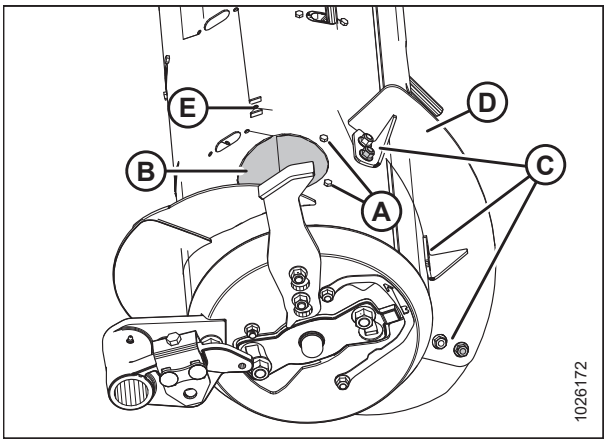

Figure 3.56: Wide Configuration – Right Side

44. MD #287032 is available only through MacDon Parts. B6400 is available only through Whole Goods.

6. **Converting from Wide configuration:** Remove bolts (A), access cover (B), and two flighting slot plugs (C) from the right side of the auger.
7. Repeat Steps *2, page 81* to *6, page 82* at the left side of the auger.

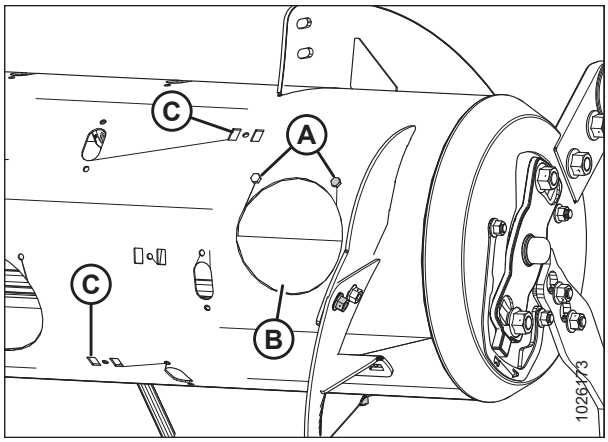

Figure 3.57: Wide Configuration – Right Side

8. Position two bolt-on flightings (A) on the right side, as shown. Temporarily secure flightings with two carriage head bolts and nuts at each location (B).

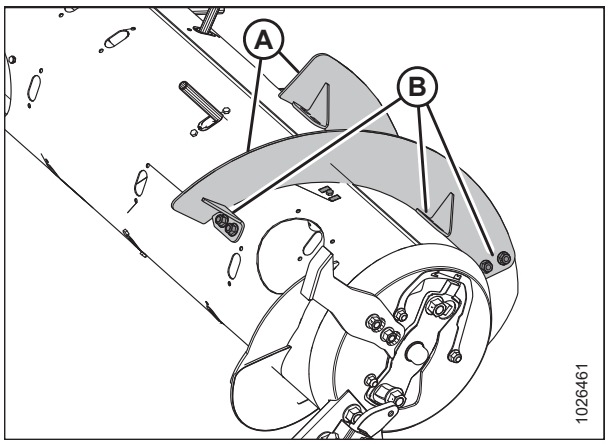

Figure 3.58: Right Side of Auger

9. Position another bolt-on flighting (A) outboard of the temporarily installed bolt-on flighting (B). Mark hole locations (C) of the bolt-on flighting onto the temporarily installed bolt-on flighting (B).
10. Remove temporarily installed bolt-on flighting (B) from the auger and drill two 11 mm (7/16 in.) holes at the marked locations.
11. Install bolt-on flighting (B) with newly drilled holes using six carriage head bolts and nuts.

    IMPORTANT:

    Carriage bolt heads must be installed on the inside of the auger to prevent damaging internal components.
12. Repeat Step *9, page 82* to Step *11, page 82* to the remaining bolt-on flighting on the right side of the auger.

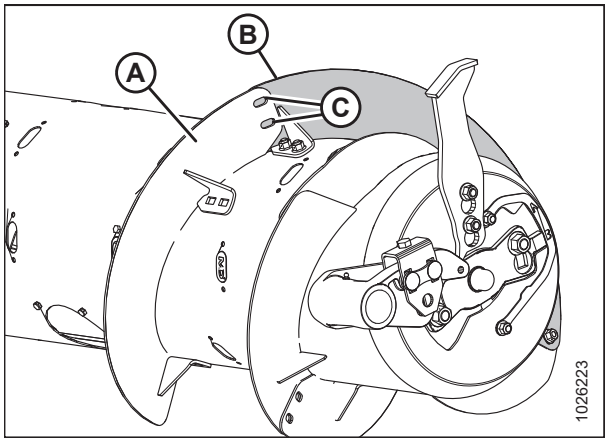

Figure 3.59: Right Side of Auger

13. Position two bolt-on flightings (A) on the left side of the auger as shown. Temporarily secure flightings with two carriage head bolts and nuts at each location (B).

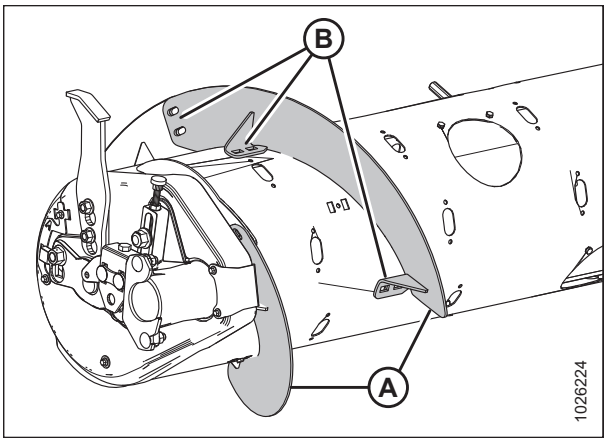

Figure 3.60: Left Side of Auger

14. Position another bolt-on flighting (A) outboard of the temporarily installed flighting (B). Mark hole locations (C) of the bolt-on flighting onto the temporarily installed bolt-on flighting.
15. Remove temporarily installed bolt-on flighting (B) from the auger and drill two 11 mm (7/16 in.) holes at the marked locations.
16. Install bolt-on flighting (B) with newly drilled holes using six carriage head bolts and nuts.

    IMPORTANT:

    Carriage bolt heads must be installed on the inside of the auger to prevent damaging internal components.

17. Repeat Steps *14, page 83* to *16, page 83* with the remaining bolt-on flighting on the left side of the auger.
18. Place bolt-on flighting (A) outboard of other flighting (B) on the left side of the auger, as shown.
19. Temporarily secure bolt-on flighting (A) with two button head bolts and nuts at location (C).

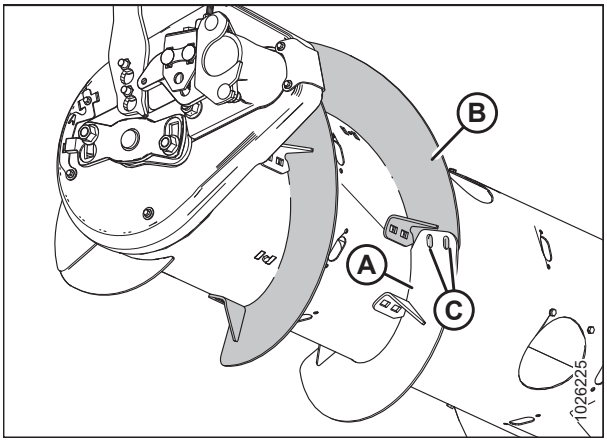

Figure 3.61: Left Side of Auger

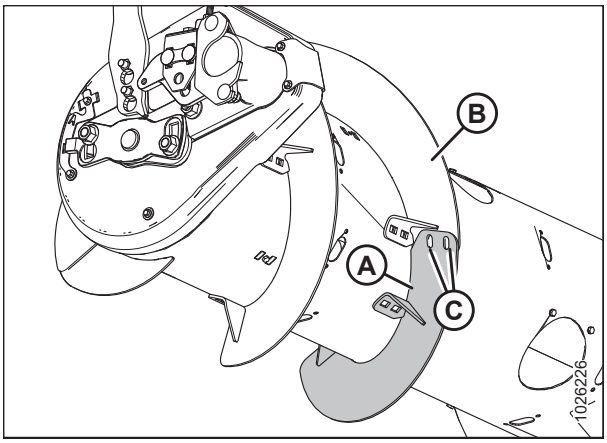

Figure 3.62: Left Side of Auger

20. Stretch flighting (A) to fit auger tube as shown. Use slotted holes on flighting to get the best fit around the auger tube.

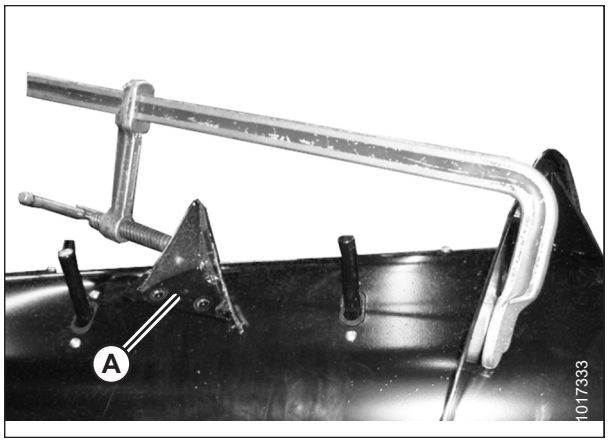

Figure 3.63: Flighting Stretched Axially

21. With flighting in the desired position, mark hole locations (A) on auger tube.
22. Remove flighting (B) from auger, and drill 11 mm (7/16 in.) holes at marked locations (A) on auger tube.
23. Remove nearest access cover(s). Retain for reinstallation.
24. Install bolt-on flighting (B) using two button head bolts and nuts at location (C), and four flange head bolts and nuts at locations (A).

    IMPORTANT:

    Ensure bolt heads at location (C) are on the inboard (crop side) and nuts are on the outboard side of the flighting.

25. Repeat Steps *18, page 83* to *24, page 84* for the remaining flighting on the left side of the auger.

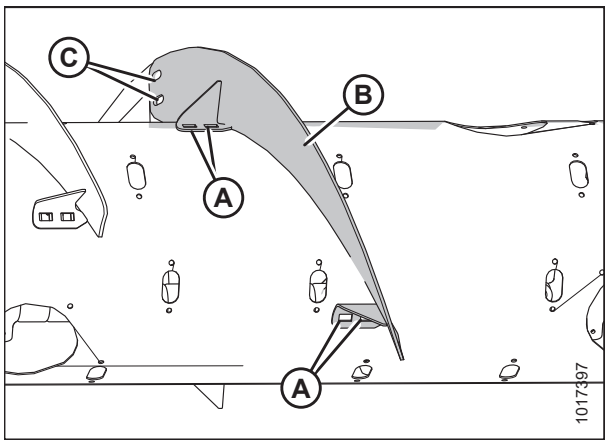

Figure 3.64: Left Side of Auger

26. Place bolt-on flighting (A) outboard of other flighting (B) on the right side of the auger as shown.
27. Temporarily secure bolt-on flighting (A) with two button head bolts and nuts at location (C).
28. Repeat Step *20, page 84* to Step *24, page 84* for both pieces of flighting on the right side of the auger.
29. Install flighting slot plugs (MD #213084) in the flighting mounting locations and secure with M6 bolts and tee nuts.
30. Torque all nuts and bolts to 47 Nm (35 lbf·ft) to eliminate deflection on flighting, then retorque them to 58–64 Nm (43–47 lbf·ft).

    NOTE:

    Flighting performs best when no gaps are present. If desired, use silicone sealant to fill the gaps.

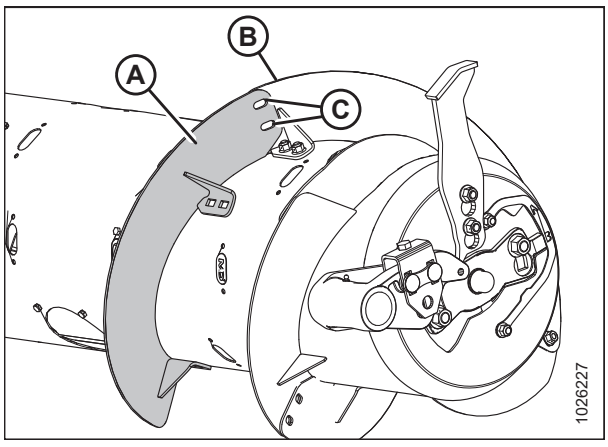

Figure 3.65: Right Side of Auger

31. Add or remove auger fingers to optimize feeding for your combine and crop conditions. For instructions, refer to *Installing Feed Auger Fingers, page 476* or *Removing Feed Auger Fingers, page 474*.
32. If not adding or removing auger fingers, reinstall all access covers and secure with bolts. Coat bolts with medium-strength threadlocker (Loctite® 243 or equivalent) and torque to 9 Nm (80 lbf·in).

Converting from Narrow Configuration to Ultra Narrow Configuration

Two flighting kits (MD #287032 or B6400[45]) and some hole-drilling are required to convert to this configuration. Extra hardware is included in these kits. Be sure to use the correct hardware at the correct location to prevent damage and to maximize performance.

NOTE:

Additional holes on the auger are needed before these flightings (A) can be installed.

NOTE:

All illustrations show the feed auger separated from the float module for clarity. The procedure can be performed with the feed auger installed in the float module.

NOTE:

Some parts have been removed from the illustrations for clarity.

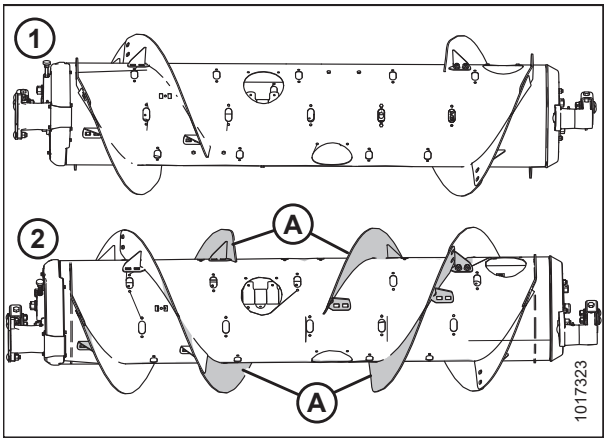

Figure 3.66: Auger Configurations – Rear View

1 - Narrow Configuration **2 - Ultra Narrow Configuration**

1. Improve access and ease installation by removing the float module from the combine. For instructions, refer to *4 Header Attachment/Detachment, page 371*.
2. Place new bolt-on flighting (A) outboard of existing flighting (B) on the left side of the auger, as shown.
3. Mark hole locations (C) of new bolt-on flighting (A) onto existing bolt-on flighting (B).
4. Remove nearest access cover to existing bolt-on flighting (B). Retain hardware for reassembly.
5. Remove existing bolt-on flighting (B) from the auger. Retain hardware for reassembly.
6. Drill two 11 mm (7/16 in.) holes at the marked locations of existing bolt-on flighting (B).
7. Reinstall existing bolt-on flighting (B) on the auger.

   NOTE:

   Ensure carriage bolt heads are on the inside of the auger to prevent damage to internal components.

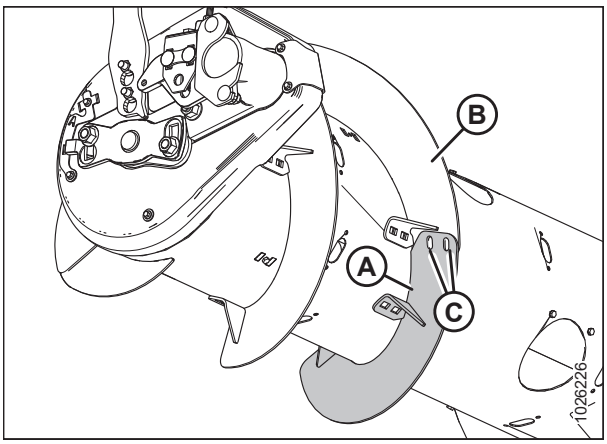

Figure 3.67: Left Side of Auger

45. MD #287032 is available only through MacDon Parts. B6400 is available only through Whole Goods.

8. Place new bolt-on flighting (A) outboard of existing flighting (B) on the left side of the auger, as shown.
9. Secure with two button head bolts (MD #135723) and nuts (MD #135799) at locations (C).

   IMPORTANT:

   Ensure bolt heads are on the inboard (crop side) and nuts are on the outboard side of the flighting.

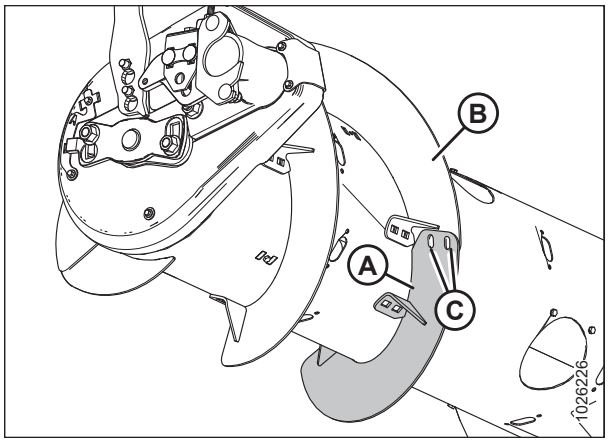

Figure 3.68: Left Side of Auger

10. Stretch flighting (A) to fit auger tube as shown. Use slotted holes on flighting to get the best fit around the auger tube.

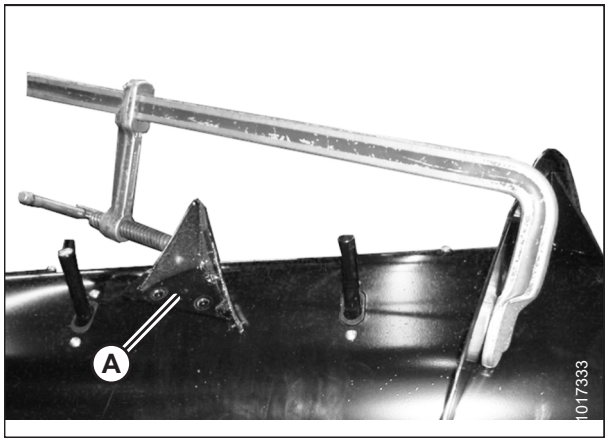

Figure 3.69: Flighting Stretched Axially

11. With flighting in desired position, mark hole locations (A) and drill 11 mm (7/16 in.) holes in auger tube.
12. Remove nearest access cover(s). Retain for reinstallation.
13. Secure bolt-on flighting on newly drilled holes (A) using four flange head bolts and nuts.
14. Repeat Step *2, page 85* to Step *13, page 86* for the other flighting on the left side of the auger.

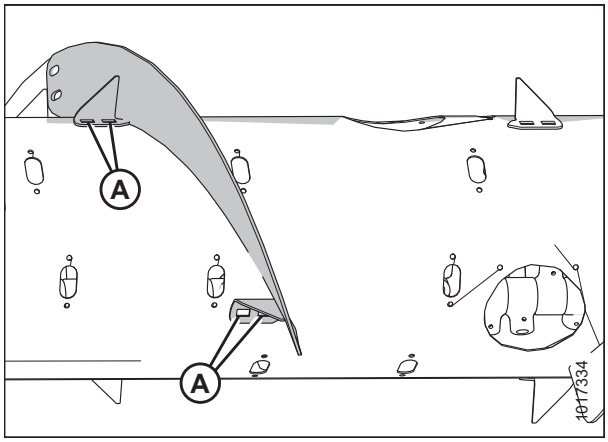

Figure 3.70: Flighting on Left Side of Auger

15. Place flighting (A) outboard of existing flighting (B) on the right side of the auger, as shown.
16. Repeat Step *3, page 85* to Step *13, page 86* for both flightings on the right side of the auger.
17. On both sides of the auger, install flighting slot plugs (MD #213084) in the flighting mounting locations and secure with M6 bolts (MD #252703) and tee nuts (MD #197263).
18. Torque all nuts and bolts to 47 Nm (35 lbf·ft) to eliminate deflection on flighting, then torque nuts and bolts again to 58–64 Nm (43–47 lbf·ft).

    NOTE:

    Flighting performs best when no gaps are present. If desired, use silicone sealant to fill the gaps.

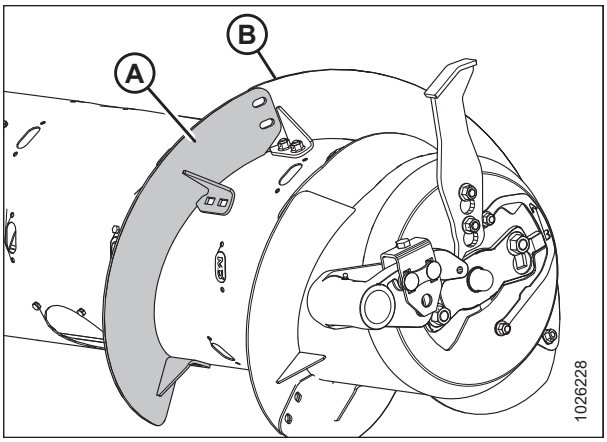

Figure 3.71: Flighting on Right Side of Auger

19. Add or remove auger fingers as necessary to optimize feeding for your combine and crop conditions. For instructions, refer to *Installing Feed Auger Fingers, page 476* or *Removing Feed Auger Fingers, page 474*.
20. If not adding or removing auger fingers, reinstall all access covers and secure with bolts. Coat bolts with medium-strength threadlocker (Loctite® 243 or equivalent) and torque to 9 Nm (80 lbf·in).

3.8.2 Cutting Height

The header design allows you to cut the crop above the ground at a desired stubble height or to cut the crop at ground level with the header on the ground. Cutting height will vary depending on a range of factors including crop type, crop conditions, etc.

Cutting off the Ground

The header's design allows you to cut crop above the ground at a desired stubble height. The cutting height will vary depending on factors including crop type, crop conditions, etc.

The optional stabilizer wheel system is designed to minimize bouncing at the header ends and may be used to float the header to achieve an even cutting height when cutting above ground level in cereal grains. The system produces even stubble height and greatly reduces Operator fatigue.

Cutting height is controlled using a combination of the combine header height control and a stabilizer wheel system (or stabilizer / slow speed transport wheel system).

The stabilizer wheel system (or stabilizer / slow speed transport wheel system) is available only for D130, D135, D140, and D145 headers.

If stabilizer wheels are installed, refer to *Adjusting Stabilizer Wheels, page 88* to change the wheel position.

If stabilizer / slow speed transport wheels are installed, refer to *Adjusting Stabilizer / Slow Speed Transport Wheels, page 90* to change the wheel position.

Adjusting Stabilizer Wheels

A properly adjusted header will achieve a balance between the amount of header weight carried by the float and the amount carried by the stabilizer wheels.

For header setting recommendations based on crop type and condition, refer to *3.7.2 Header Settings, page 46*.

WARNING

To avoid injury or death from unexpected start-up of machine, always stop the engine and remove the key from the ignition before leaving the operator's seat for any reason.

1. Raise the header until the stabilizer wheels are off the ground.
2. Shut down the engine, and remove the key from the ignition.
3. Check that the float is working properly. For instructions, refer to *Checking and Adjusting Header Float, page 95*.
4. Support the wheel weight by lifting slightly with one hand on support (B), and pull up on handle (A) to release the lock.
5. Lift the wheel using support (B), and engage the support channel into center slot (C) in the upper support.
6. Push down on handle (A) to lock.

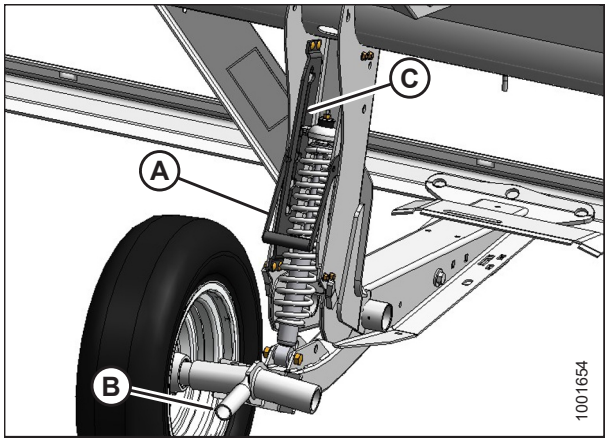

Figure 3.72: Stabilizer Wheel

7. Lower the header to the desired cutting height using the combine controls and check load indicator (A).

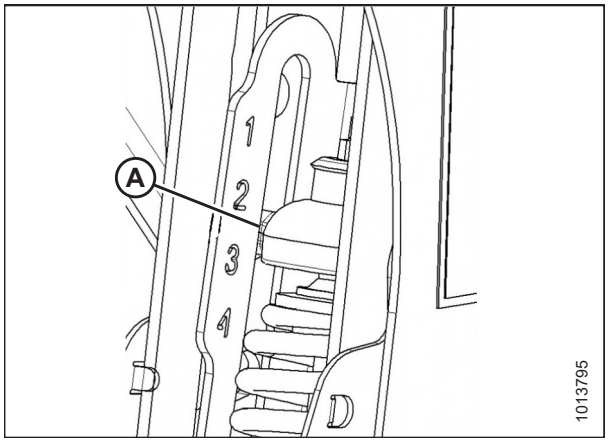

Figure 3.73: Load Indicator

8. Adjust the header angle to the desired working angle with the machine's header angle controls. If header angle is not critical, set it to mid-position.

   IMPORTANT:

   Continuous operation with excessive spring compression (for example, load indicator reading greater than 4 or a compressed length [A] less than 295 mm [11 5/8 in.]) can result in damage to the suspension system.

9. Use the combine's Auto Header Height Control (AHHC) to automatically maintain cutting height. For instructions, refer to *3.9 Auto Header Height Control, page 148* and your combine operator's manual for details.

   NOTE:

   The height sensor on the FM100 Float Module connects in the cab to the combine's header control module.

   NOTE:

   Header angle adjustments or AHHC ground pressure control may be used to adjust the cutting height while moving.

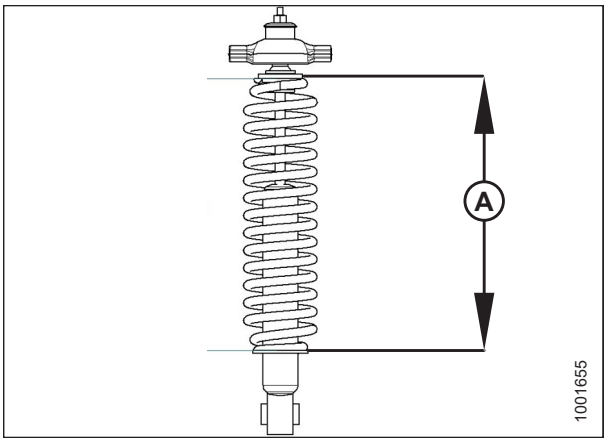

Figure 3.74: Spring Compression

Adjusting Stabilizer / Slow Speed Transport Wheels

A properly adjusted header will achieve a balance between the amount of header weight carried by the float and the amount carried by the stabilizer / slow speed transport wheels.

WARNING

To avoid injury or death from unexpected start-up of machine, always stop the engine and remove the key from the ignition before leaving the operator's seat for any reason.

1. Raise the header so the stabilizer wheels are off the ground.
2. Shut down the engine, and remove the key from the ignition.
3. Check that the float is working properly. For instructions, refer to *Checking and Adjusting Header Float, page 95*.
4. Remove hairpin (A) from the latch on the right wheel assembly.
5. Disengage latch (B), lift the wheel out of the hook, and place on the ground as shown.

   NOTE:

   This reduces weight of assembly and makes adjusting the wheel position easier.
6. Lift the left wheel slightly to support the weight, then pull handle (C) upwards to release the lock.
7. Lift the left wheel to the desired height and engage the support channel into the slot (D) in the upper support.
8. Push down on handle (C) to lock.
9. Lift the right wheel back into the field position and ensure latch (B) is engaged.
10. Secure the latch with hairpin (A).
11. Support the wheel weight by lifting slightly with one hand, and pull up on handle (A) to release the lock.
12. Lift the wheels to the desired height, and engage the support channel into slot (B) in the upper support.
13. Push down on handle (A) to lock.

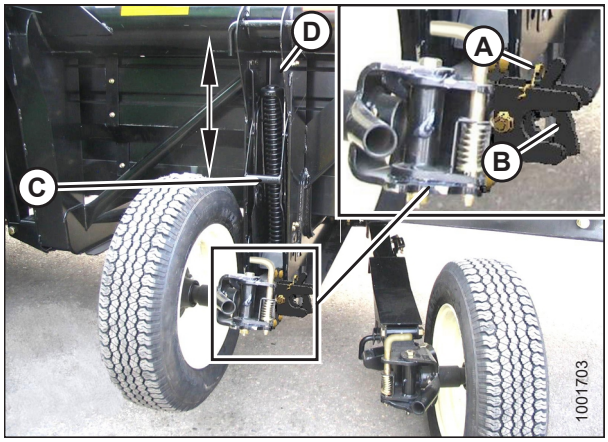

Figure 3.75: Right Wheel

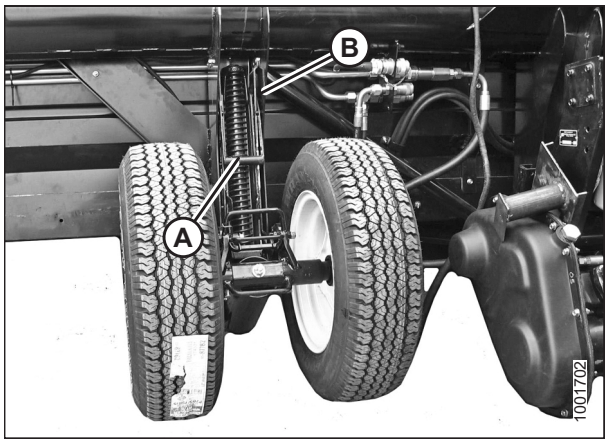

Figure 3.76: Left Wheel

14. Lower the header to the desired cutting height using the combine controls and check the load indicator (A).

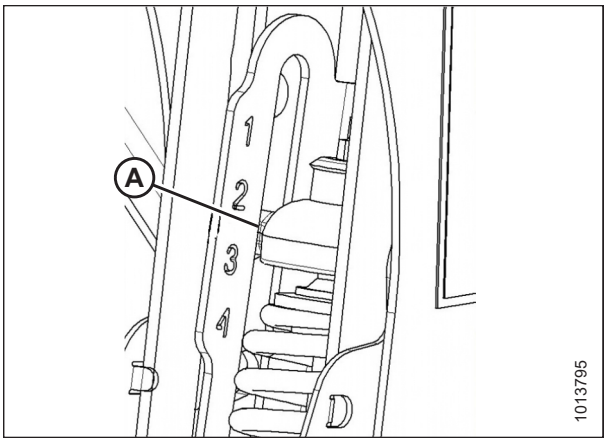

Figure 3.77: Load Indicator

15. Adjust the header angle to the desired working angle with the machine's header angle controls. If header angle is not critical, set it to mid-position.

    IMPORTANT:

    Continuous operation with excessive spring compression (for example, load indicator reading greater than 4 or a compressed length [A] less than 295 mm [11 5/8 in.]) can result in damage to the suspension system.

16. Use the combine's auto header height control (AHHC) to automatically maintain cutting height. For instructions, refer to *3.9 Auto Header Height Control, page 148* and your combine operator's manual for details.

    NOTE:

    The height sensor on the FM100 Float Module connects in the cab to the combine's header control module.

    NOTE:

    Header angle adjustments or AHHC ground pressure control may be used to adjust the cutting height while moving.

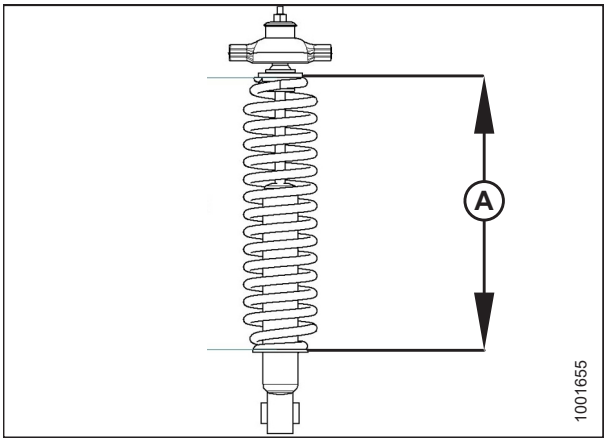

Figure 3.78: Spring Compression

Cutting on the Ground

Cutting height will vary depending on crop type, crop conditions, cutting conditions, etc.

Cutting on the ground is performed with the header fully lowered and the cutterbar on the ground. The orientation of the knife and knife guards relative to the ground (header angle) is controlled by the skid shoes and the center-link—it is **NOT** controlled by the header lift cylinders. The skid shoes and center-link allow you to adjust to field conditions and maximize the amount of material cut while reducing damage to the knife caused by stones and debris.

The header float system floats the header over the surface to compensate for ridges, trenches, and other variations in ground contour to prevent the cutterbar from pushing into the ground or leaving uncut crop.

Refer to the following for additional information:

- *Adjusting Inner Skid Shoes, page 92*
- *Adjusting Outer Skid Shoes, page 93*
- *3.8.4 Header Angle, page 101*
- *3.8.3 Header Float, page 94*

Adjusting Inner Skid Shoes

DANGER

To avoid bodily injury or death from unexpected start-up or fall of raised machine, always stop engine, remove key, and engage safety props before going under header for any reason.

1. Raise the header to full height and engage the safety props.
2. Shut down the engine, and remove the key from the ignition.
3. Raise the stabilizer wheels or slow speed transport wheels fully (if installed). For instructions, refer to the following:
   - *Adjusting Stabilizer Wheels, page 88*
   - *Adjusting Stabilizer / Slow Speed Transport Wheels, page 90*
4. Remove lynch pin (A) from each skid shoe.
5. Hold shoe (B) and remove pin (C) by disengaging from the frame and pulling away from the shoe.
6. Raise or lower skid shoe (B) to achieve the desired position using the holes in support (D) as a guide.
7. Install pin (C), engage in frame, and secure with lynch pin (A).
8. Check that all skid shoes are adjusted to the same position.

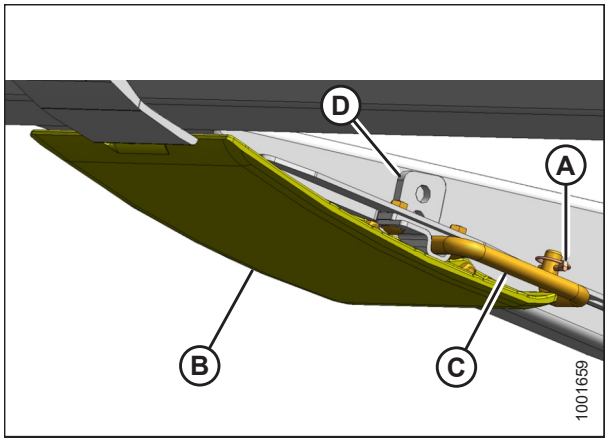

Figure 3.79: Inner Skid Shoe

9. Adjust the header angle to the desired working position using the machine's header angle controls. If the header angle is not critical, set it to the mid-position.
10. Check the header float. For instructions, refer to *3.8.3 Header Float, page 94*.

Adjusting Outer Skid Shoes

DANGER

To avoid bodily injury or death from unexpected start-up or fall of raised machine, always stop engine, remove key, and engage safety props before going under header for any reason.

1. Raise the header to its full height and engage the safety props.
2. Shut down the engine, and remove the key from the ignition.
3. Raise the stabilizer wheels or slow speed transport wheels fully (if installed). For instructions, refer to the following:
   - *Adjusting Stabilizer Wheels, page 88*
   - *Adjusting Stabilizer / Slow Speed Transport Wheels, page 90*
4. Remove lynch pin (A) from each skid shoe (B).
5. Hold skid shoe (B) and remove pin (C) by disengaging from the frame and pulling away from the shoe.
6. Raise or lower skid shoe (B) to achieve the desired position using the holes in support (D) as a guide.
7. Reinstall pin (C), engage in the frame, and secure with lynch pin (A).
8. Check that all skid shoes are adjusted to the same position.
9. Check the header float. For instructions, refer to *3.8.3 Header Float, page 94*.

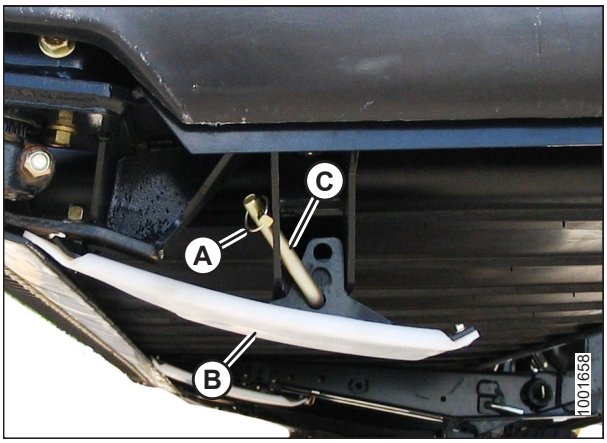

Figure 3.80: Outer Skid Shoe

3.8.3 Header Float

The header float system reduces the ground pressure at the cutterbar allowing the header to more easily follow the ground and quickly respond to sudden ground contour changes or obstacles.

Header float is indicated on the float indicator (A). Values 0 to 4 represent the force of the cutterbar on the ground with 0 being the minimum and 4 being the maximum.

The maximum force is determined by the tension on the float module's adjustable float springs. Float can be changed to suit field and crop conditions and is dependent on what options have been installed on the header. For instructions, refer to *Checking and Adjusting Header Float, page 95*.

The D1 Series Draper Header performs best with minimum ground pressure under normal conditions. Readjust the float if adding optional attachments to the header that affect header weight.

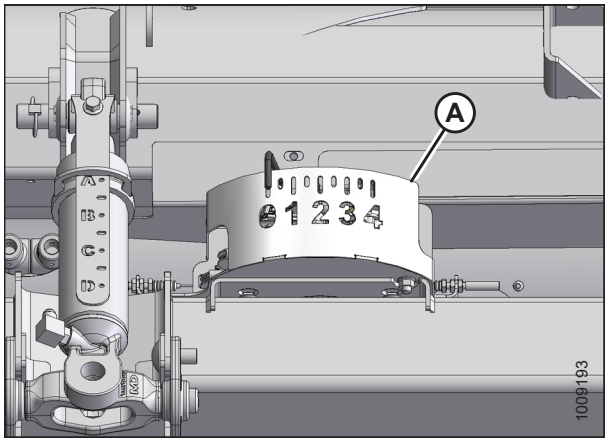

Figure 3.81: Float Indicator

1. Set the float for cutting on the ground as follows:
   a. Ensure the header float locks are disengaged. For instructions, refer to *Locking/Unlocking Header Float, page 100*.
   b. Lower the feeder house using the combine header controls until float indicator (A) reaches the desired float value (cutterbar ground force). Set the float indicator initially to float value 2 and adjust as necessary.
2. Set the float for cutting off the ground as follows:
   a. Set up the stabilizer wheels. For instructions, refer to *Cutting off the Ground, page 87*.
   b. Note the float value on the float indicator and maintain this value during operation (disregard minor fluctuations on the indicator).

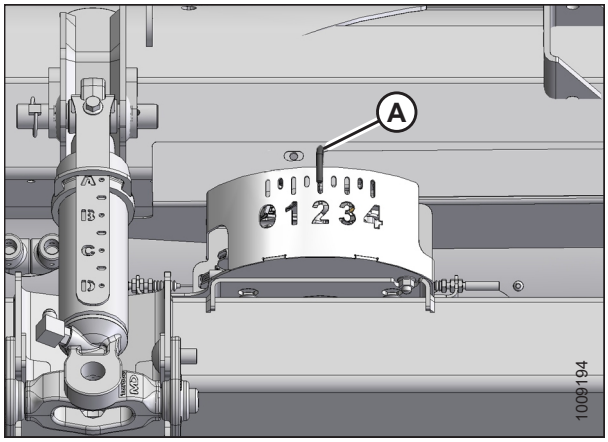

Figure 3.82: Cutting on the Ground

Checking and Adjusting Header Float

The header is equipped with a suspension system that floats the header over the ground to compensate for ridges, trenches, and other variations in ground contour. If the header float is not set properly, it may cause the cutterbar to push into the ground or leave uncut crop. This procedure describes how to check header float and adjust to the factory-recommended settings.

WARNING

To avoid injury or death from unexpected start-up of machine, always stop the engine and remove the key from the ignition before leaving the operator's seat for any reason.

Use the following guidelines when adjusting float:

- Turn each adjustment bolt pair equally. Repeat torque wrench reading procedure on both sides of header.
- Set the header float as light as possible without causing excessive bouncing to prevent knife component breakage, soil scooping, and soil build-up at the cutterbar in wet conditions.
- To avoid excessive bouncing and leaving a ragged cut, use a slower ground speed with a light float setting, if necessary.
- When cutting off the ground, use the stabilizer wheels in conjunction with header float to minimize bouncing at the header ends and to control cut height. For instructions, refer to *Adjusting Stabilizer Wheels, page 88*.

NOTE:

If adequate header float cannot be achieved using all of the available adjustments, an optional heavy-duty spring is available. See your MacDon Dealer or refer to the parts catalog for ordering information.

To check and adjust header float, follow these steps:

1. Park the combine on a level surface.
2. Level the header and float module. If the header and float module are not level, perform the following checks before adjusting the float:

   IMPORTANT:

   Do **NOT** use the float module springs to level the header.

   - Check that the combine feeder house is level. For instructions, refer to your combine operator's manual.
   - Check that the top of the float module is level with the combine axle.
   - Ensure the combine tires are inflated equally.
3. Adjust header so that the cutterbar is 150–254 mm (6–10 in.) off the ground.
4. Extend the header angle hydraulic cylinder to between **B** and **C** on indicator (A).

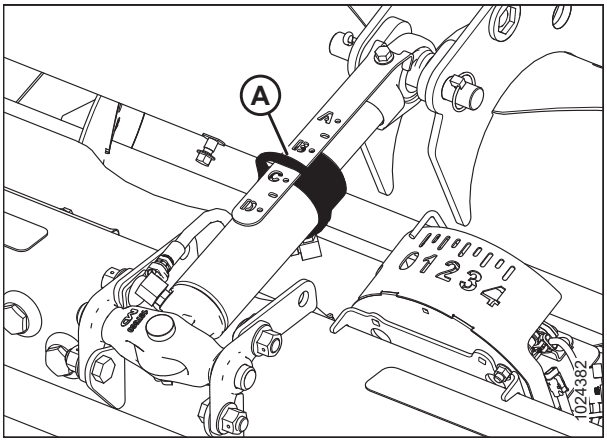

Figure 3.83: Center-Link

5. Adjust the reel fore-aft position to between 5 and 6 on position indicator decal (A) located on the reel right arm.
6. Lower the reel fully.
7. Shut down the engine, and remove the key from the ignition.

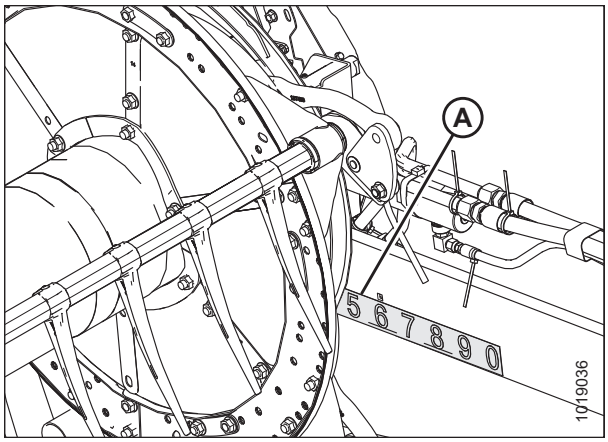

Figure 3.84: Fore-Aft Position

8. Disengage both header float locks by pulling float lock handle (A) away from the float module and pushing the float lock handle down and into position (B) (**UNLOCK**).

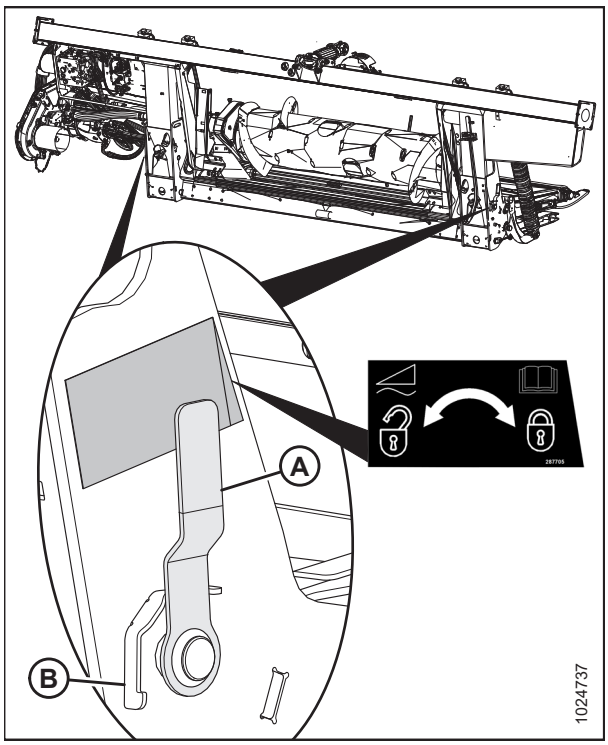

Figure 3.85: Header Float Lock in Locked Position

9. Place stabilizer wheels and slow speed transport wheels (if equipped) in storage position as follows:

    a. Support the wheel weight by lifting slightly with one hand, and pull up on handle (A) to release the lock.

    b. Lift the wheels to the desired height, and engage the support channel into slot (B) in the upper support.

    c. Push down on handle (A) to lock.

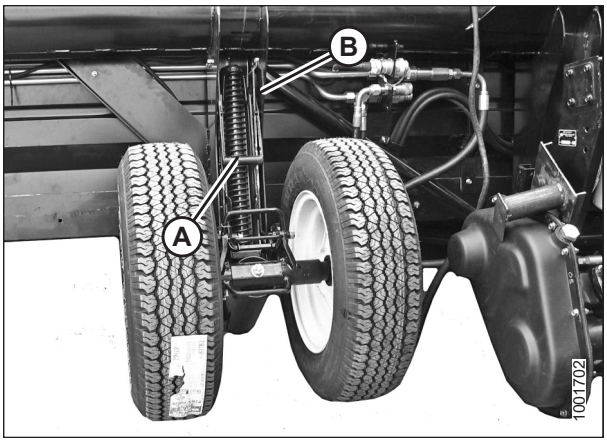

Figure 3.86: Left Wheel

10. Remove supplied torque wrench (A) from its storage position at the right side of the float module frame. Pull in the direction shown to disengage the wrench from the hook.

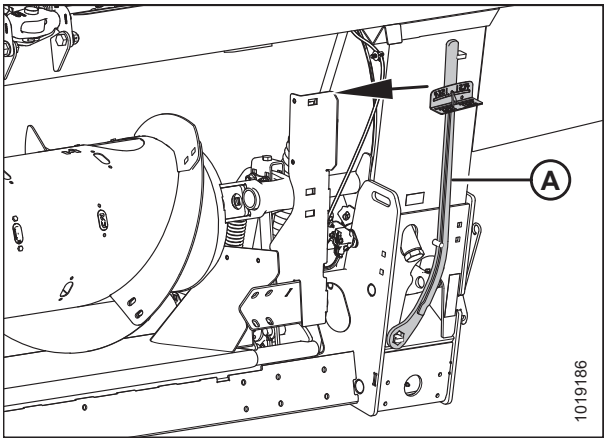

Figure 3.87: Torque Wrench Storage Location

11. Place torque wrench (A) onto float lock (B). Note the position of the wrench for checking left or right side.

12. Push down on wrench to rotate bell crank (C) forward.

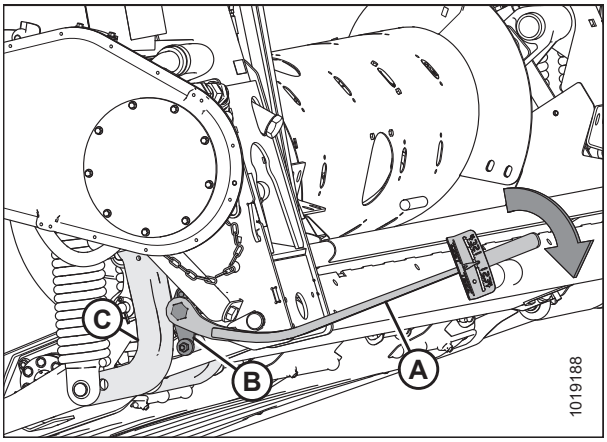

Figure 3.88: Float Module – Left Side

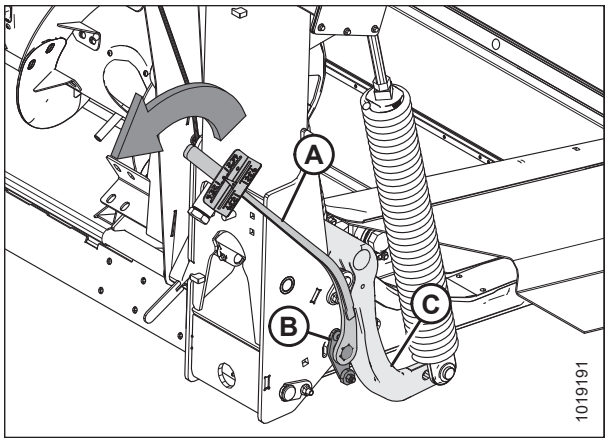

Figure 3.89: Float Module – Right Side

13. Push down on the wrench until indicator (A) reaches a maximum reading and then begins to decrease. Note the maximum reading. Repeat at opposite side.
14. Use the following table as a guide for float settings:
    - If reading on the wrench is high, the header is heavy
    - If reading on the wrench is low, the header is light

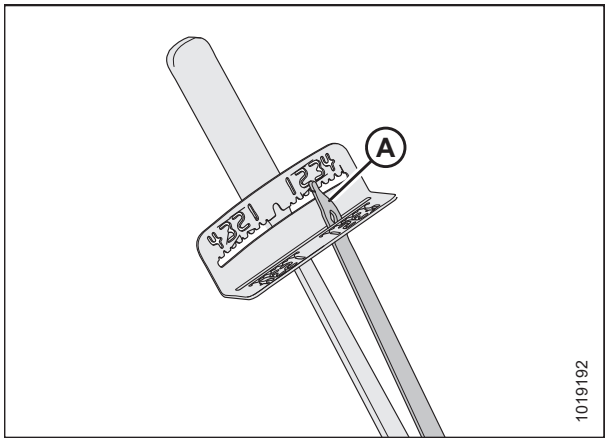

Figure 3.90: Torque Wrench

Table 3.12 Float Settings

Header Size	Indicator Reading	
	Cutting on the Ground	Cutting off the Ground
D120, D125, D130, and D135	1 1/2 to 2	2 to 2 1/2
D140 and D145	2 to 2 1/2	2 1/2 to 3

15. To access float spring adjustment bolts (A), loosen bolts (C) and rotate spring locks (B).
16. To increase float (decrease header weight), turn both adjustment bolts (A) on the left side clockwise. Repeat adjustment at opposite side.

    To decrease float (increase header weight), turn left side adjustment bolts (A) counterclockwise. Repeat at opposite side.

    NOTE:

    Turn each bolt pair equally.
17. Adjust the float so the wrench readings are equal on both sides of the header.
18. Lock adjustment bolts (A) with spring locks (B). Ensure bolt heads (A) are engaged in the spring lock cutouts. Tighten bolts (C) to secure spring locks in place.

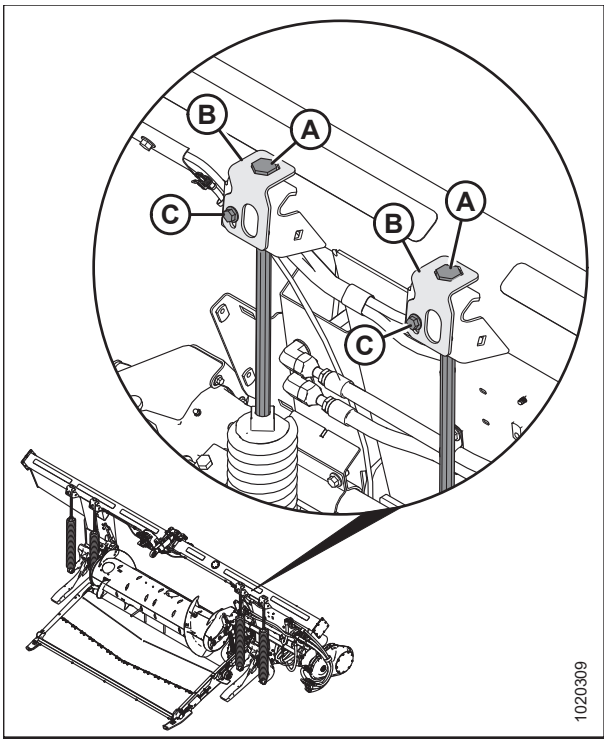

Figure 3.91: Float Adjustment – Left Side

Locking/Unlocking Header Float

Two header float locks—one on each side of the float module—lock and unlock the header float system.

IMPORTANT:

The float locks must be engaged when the header is being transported with the float module attached so there is no relative movement between the float module and the header. The float locks also must be locked when detaching from the combine to enable the feeder house to release the float module.

To **disengage (unlock) float locks**, pull the float lock handle (A) into position (B) (**UNLOCK**). In this position, the header is unlocked, and can float with respect to the float module.

To **engage (lock) float locks**, push the float lock handle (A) into position (C) (**LOCK**). In this position, the header cannot move with respect to the float module.

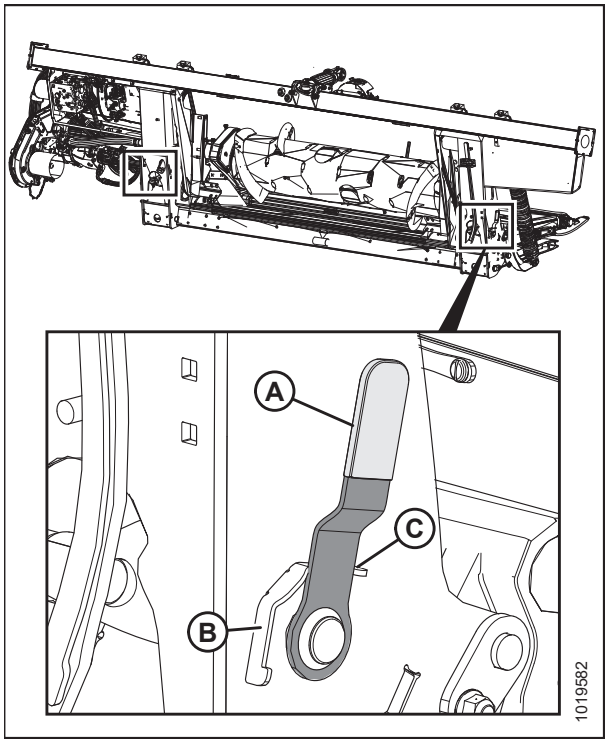

Figure 3.92: Float Lock (in Locked Position)

3.8.4 Header Angle

Header angle is the angle between the header and the ground. The header angle is adjustable to accommodate different crop conditions and/or soil types and can be adjusted using the center-link between the combine and the header. Some combines have an adjustable feeder house, which provides the operator an alternate method for controlling header angle.

For combine-specific adjustment details, refer to *Adjusting Header Angle from Combine, page 103*

Header angle (A) is the angle between the header and the ground.

The header angle controls the distance (B) between the cutterbar knife and the ground and is a critical component for effective cutting crop at ground level.

Adjusting the header angle pivots the header at the point of skid shoe/ground contact (C).

Guard angle (D) is the angle between the upper surface of the cutterbar guards and the ground.

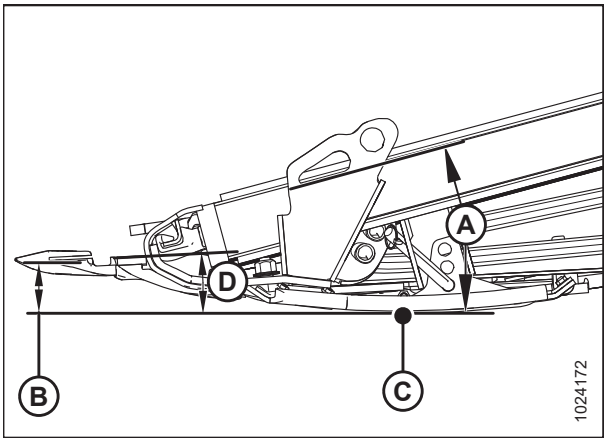

Figure 3.93: Header Angle

Set the header angle according to the type and condition of crop and soil as follows:

- Use shallower settings (A) (position **A** on the indicator) for normal cutting conditions and wet soil to reduce soil buildup at the cutterbar. Shallow angle settings also minimize damage to the knife in stony fields.
- Use steeper settings (D) (position **D** on the indicator) for lodged crops and crops that are close to the ground such as soybeans.

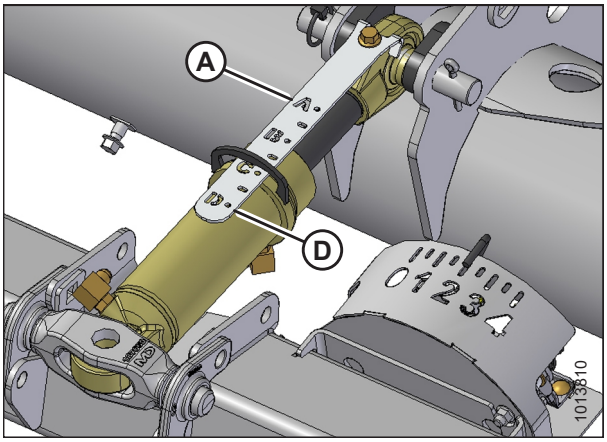

Figure 3.94: Center-Link

The shallowest angle (A) (center-link fully retracted) produces the highest stubble when cutting on the ground.

The steepest angle (D) (center-link fully extended) produces the lowest stubble when cutting on the ground.

Choose an angle that maximizes performance for your crop and field conditions. Refer to the table below for a summary of adjustment ranges.

Table 3.13 D1 Series Header Angle

Header Size	Guard Angle
6.1 and 7.6 m (20 and 25 ft.)	7.0–12.4°
9.1–13.7 m (30–45 ft.)	2.0–7.4°

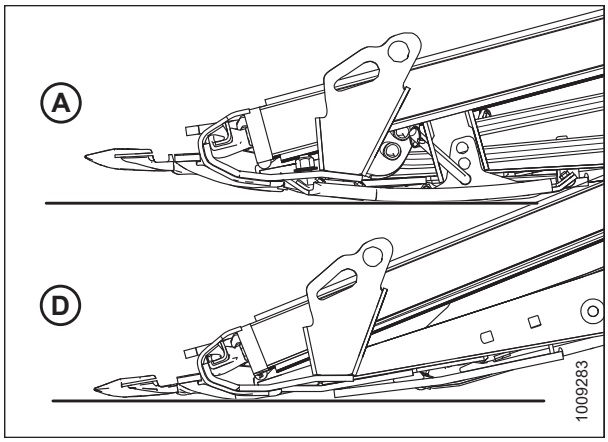

Figure 3.95: Guard Angles

For recommended header/guard angle settings for your particular crop conditions. Refer to *3.7.2 Header Settings, page 46*.

Adjusting Header Angle from Combine

The header/guard angle is adjusted from the combine cab with a switch on the operator's control handle and an indicator on the center-link or on the monitor in the cab. The header/guard angle is determined by the length of the center-link between the combine float module and the header, or by tilting the feeder house on selected combines.

Case combines:

Case combines use control handle switches to adjust the center-link to change header angle.

1. Press and hold SHIFT button (A) on backside of control handle and press switch (B) to tilt header forward or press switch (C) to tilt the header back.



Figure 3.96: Case Combine Controls

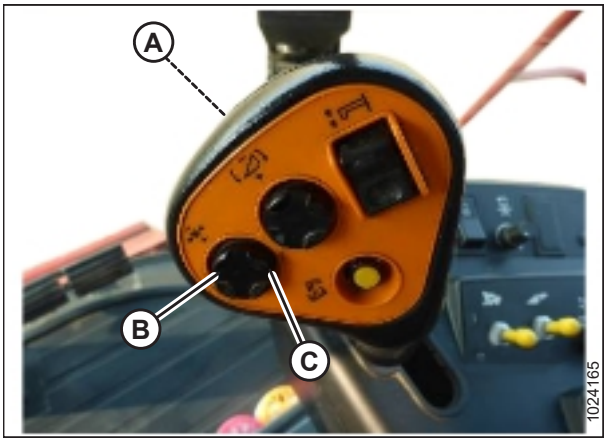

Figure 3.97: Case Combine Controls

New Holland combines:

New Holland combines use control handle switches to adjust the center-link to change header angle.

1. Press and hold SHIFT button (A) on backside of control handle and press switch (B) to tilt header forward (steeper angle) or switch (C) to tilt header back (shallower angle).

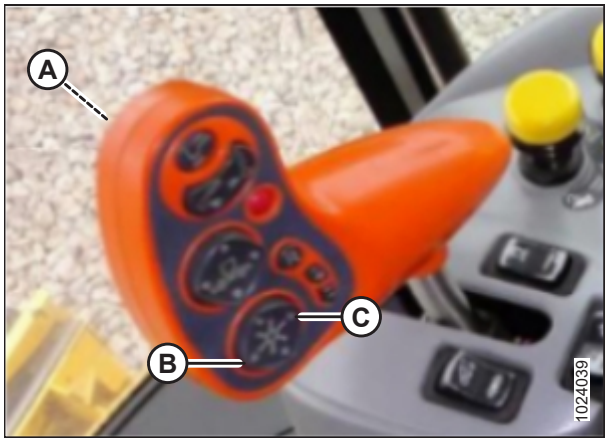

Figure 3.98: New Holland CR/CX Controls

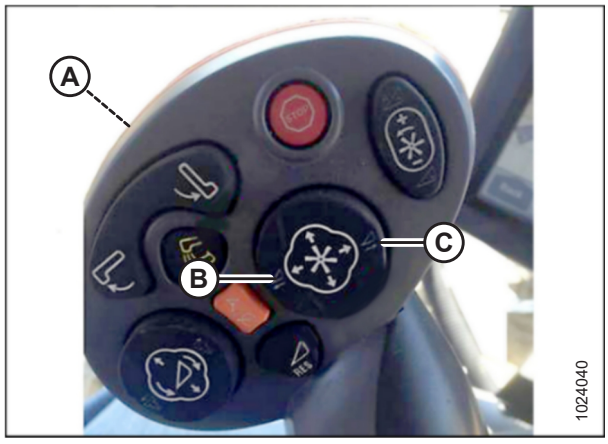

Figure 3.99: New Holland CR/CX Controls

AGCO combines:

AGCO combines use a combination of the reel fore-aft switches on the control handle and a dealer-installed auxiliary rocker switch, which toggles between reel fore-aft and header tilt functionality. The location of the rocker switch varies with combine model.

1. **Gleaner A only:** Open armrest cover (A) (Gleaner A only) to expose row of switches, and press dealer-installed rocker switch (B) to HEADER TILT position.

   NOTE:

   Gleaner A shown. Other Challenger and Massey Ferguson combine models have rocker switch on the console (not shown).

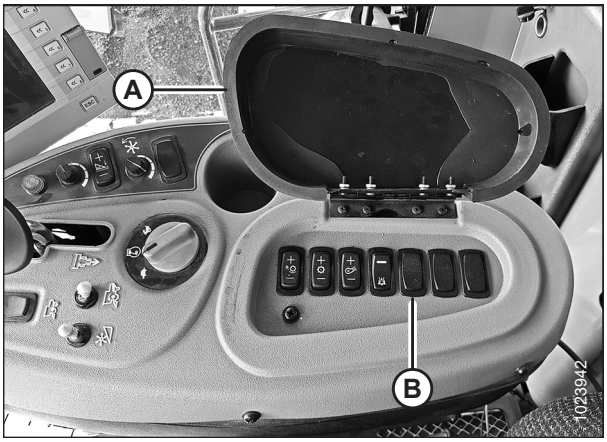

Figure 3.100: Gleaner A Console

2. Press button (A) on control handle to tilt header forward (steeper angle) or button (B) to tilt header back (shallower angle).



Figure 3.101: Gleaner Controls

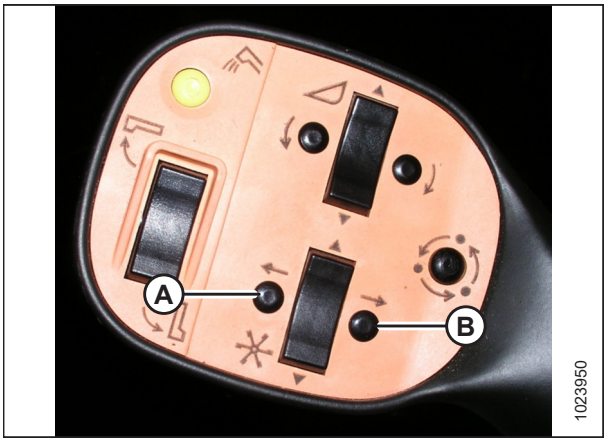

Figure 3.102: Gleaner Controls



Figure 3.103: Challenger/Massey Ferguson Controls

CLAAS combines:

CLAAS (with factory-installed fore-aft / header tilt switch): Newer CLAAS combines use a combination of the reel fore-aft switches on the control handle and a factory-installed auxiliary rocker switch which toggles between reel fore-aft and header tilt functionality.

1. Press HOTKEY switch (A) on the operator's console to deck plate position (the header icon [B] with the arrows pointing to each other).

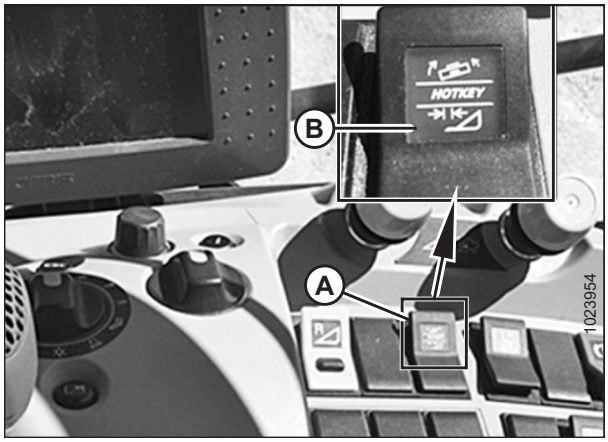

Figure 3.104: CLAAS 700 Console

2. Press and hold switch (A) on rear of control handle.
3. Press switch (C) to tilt header forward (steeper angle) or switch (B) to tilt header back (shallower angle).

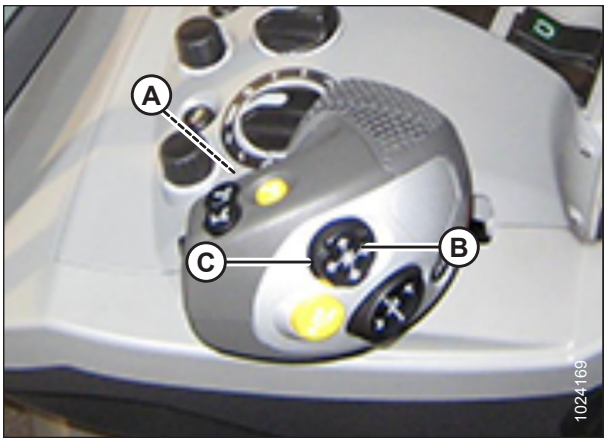

Figure 3.105: CLAAS 600/700 Control Handle

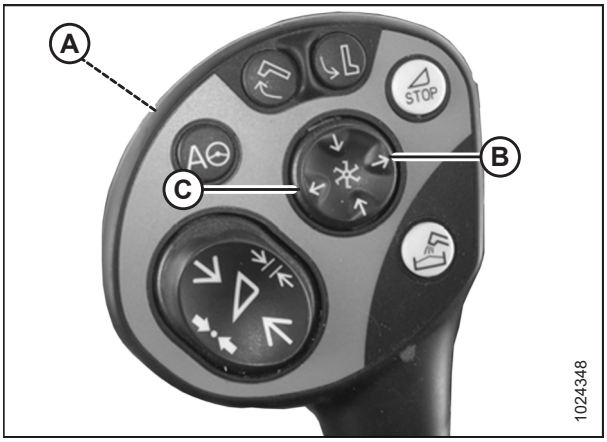

Figure 3.106: CLAAS 500 Control Handle

John Deere combines:

John Deere S700: S700 Series combines can use a feeder house deckplate tilting system for header fore-aft adjustment, instead of using the MacDon center-link for header tilt. It is recommended to set the deckplate at a mid-point position and use the MacDon fore-aft and header tilt system for tilt functionality.

IMPORTANT:

Damage to equipment may occur if both the deckplate and MacDon header tilt are adjusted to their maximum range.

1. Press switch (A) to tilt header forward (steeper angle) or switch (B) to tilt header back (shallower angle).

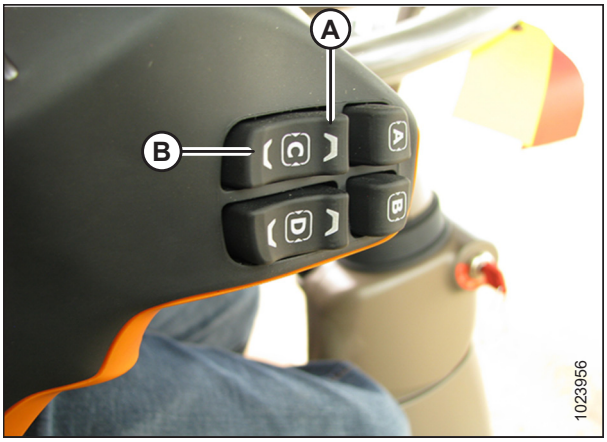

Figure 3.107: John Deere 700 Controls

John Deere (except S700 Series): John Deere combines use a combination of the reel fore-aft switches on the control handle and a Dealer-installed auxiliary rocker switch which toggles between reel fore-aft and header tilt functionality.

1. Press reel fore-aft / header tilt switch (A) on console into HEADER TILT position.

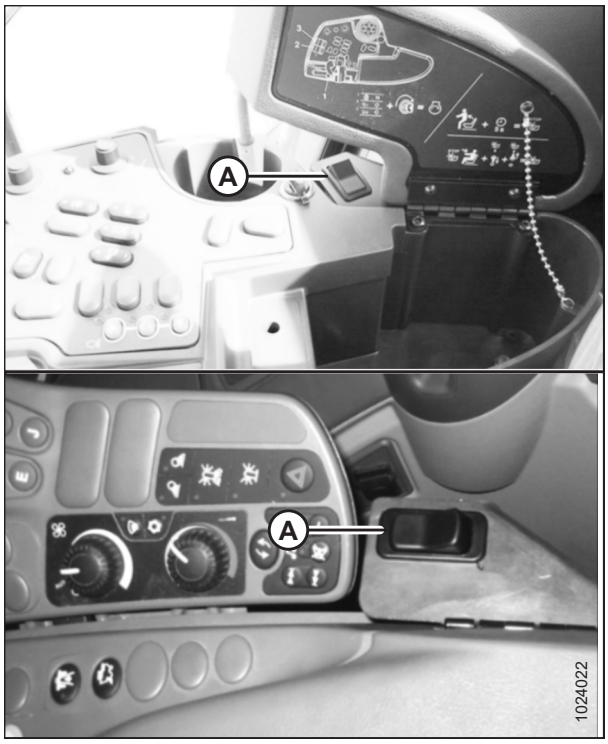

Figure 3.108: John Deere Consoles

2. Press switch (A) to tilt header forward (steeper angle) or switch (B) to tilt header back (shallower angle).



Figure 3.109: John Deere Control Handle

Versatile combines:

Versatile combines use a combination of the reel fore-aft switches on the control handle and a factory-installed auxiliary rocker switch on the combine control console which toggles between reel fore-aft and header tilt functionality.

1. Press ON switch (A) on console to place controls in HEADER TILT mode.
2. Press button (B) on control handle to tilt header forward (steeper angle) or button (C) to tilt header back (shallower angle).



Figure 3.110: Versatile Control Handle and Console

3.8.5 Reel Speed

Reel speed is one of the factors that determines how crop is moved from the cutterbar onto the drapers.

The reel performs best when it appears to be driven by the ground. It should move the cut crop evenly through the cutterbar and onto the drapers without bunching and with minimal disturbance.

In standing crop, reel speed should be slightly higher than, or equal to, ground speed.

In flattened crop or crop that is leaning away from the cutterbar, the reel speed needs to be higher than the ground speed. To achieve this, either increase the reel speed or decrease the ground speed.

Excessive shattering of grain heads or crop loss over the header backtube may indicate that the reel speed is too high. Excessive reel speed also increases reel component wear and overloads the reel drive.

Slower reel speeds can be used with nine-bat reels, which is advantageous in shatter-prone crops.

NOTE:

Nine-bat reels are available on D120 and D125 headers from the factory. A conversion kit to change from a six-bat reel to a nine-bat reel is available for these headers.

For recommended reel speeds in specific crops and conditions, refer to *3.7.2 Header Settings, page 46*.

The reel speed is adjustable using the controls in the combine cab. Refer to the combine operator's manual for adjustment details.

Optional Reel Drive Sprockets

Optional reel drive sprockets for use in special crop conditions are available as an alternative to the factory-installed sprocket.

The header is factory-equipped with a 19-tooth reel drive sprocket, which is suitable for most crops. Other sprockets are available that provide more torque to the reel in heavy cutting conditions or allow for higher reel speeds in light crops when operating at increased ground speeds. Refer to Table *3.14, page 110*, and contact your MacDon Dealer for ordering information.

Table 3.14 Optional Reel Drive Sprockets

Machine Hydraulics	Combine	Application	Optional Drive Sprocket
13.79–14.48 MPa (2000–2100 psi)	Gleaner Transverse Rotary	Combining down rice	10 tooth
17.24 MPa (2500 psi)	CLAAS 500, 700 Series, Challenger Axial Rotary	Combining down rice	12 tooth
20.68 MPa (3000 psi)	New Holland CR, CX, Case IH 7010, 8010, 7120, 8120, 88 Series	Combining down rice	14 tooth
Low flow (under 42 L/min [11 gpm])	—	Combining light crops above 16 km/h (10 mph)	21 tooth

For installation details, refer to *5.14.3 Reel Drive Sprocket, page 606*.

3.8.6 Ground Speed

Operating at the proper ground speed will cleanly cut crop and evenly distribute crop material into the combine.

Reduce ground speed in difficult cutting conditions to reduce loads on cutting components and drives.

Use lower ground speeds in very light crops (e.g., short soybeans) to allow the reel to pull in short plants. Start at 4.8–5.8 km/h (3.0–3.5 mph) and adjust as required.

Higher ground speeds may require heavier float settings to prevent excessive bouncing that causes uneven cutting and possible damage to the cutting components. If ground speed is increased, draper and reel speeds should generally be increased to handle the extra material.

Figure *3.111, page 111* illustrates the relationship between ground speed and area cut for the various sized headers.

Figure 3.111: Ground Speed versus Acres

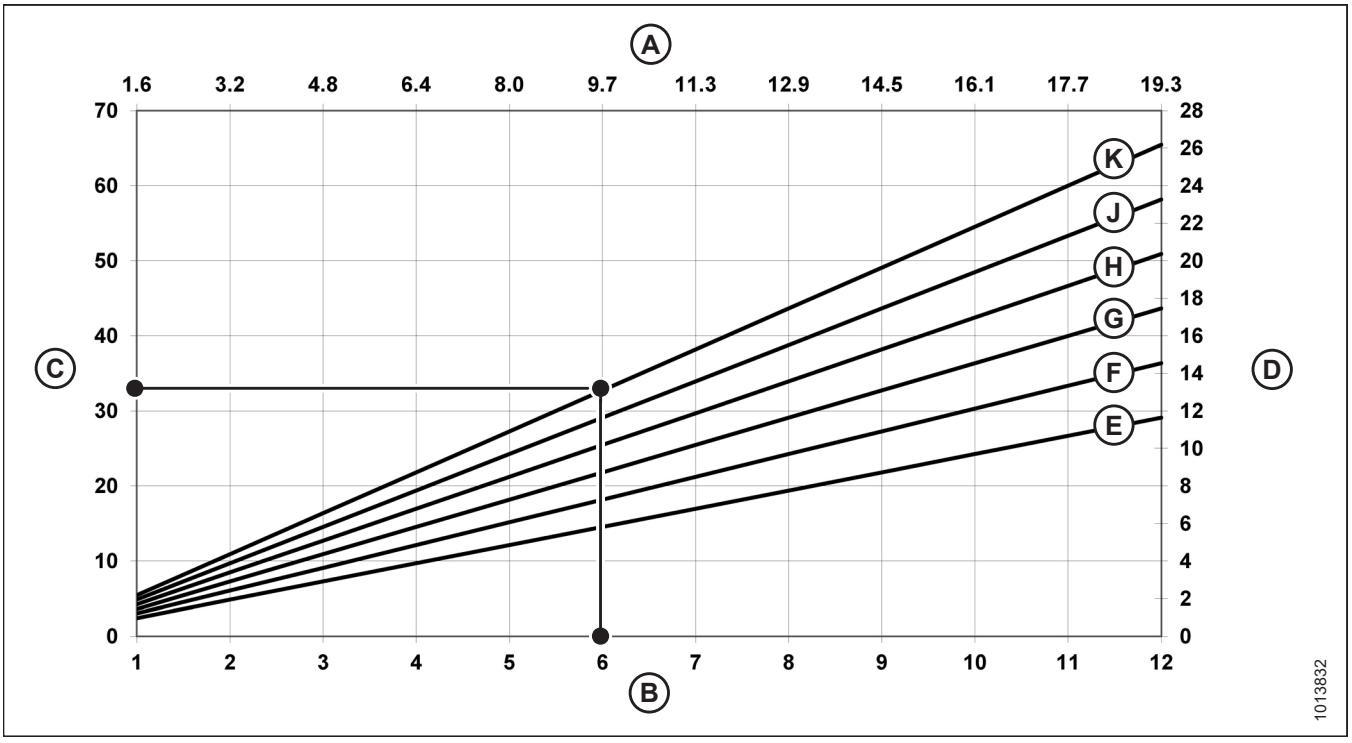

A - Kilometers/Hour
B - Miles/Hour
C - Acres/Hour
D - Hectares/Hour
E - 6.1 m (20 ft.)
F - 7.6 m (25 ft.)
G - 9.1 m (30 ft.)
H - 10.7 m (35 ft.)
J - 12.2 m (40 ft.)
K - 13.7 m (45 ft.)

Example: A 13.7 m (45 ft.) header operating at a ground speed of 9.7 km/h (6 mph) would produce a cut area of approximately 13.4 hectares (33 acres) in one hour.

3.8.7 Draper Speed

Operating with the correct draper speed is an important factor for achieving good flow of cut crop away from the cutterbar.

The side drapers and feed draper operate independently of each other; therefore, the speeds are controlled differently. The side draper speed is adjusted with a manually adjustable control valve that is mounted on the float module. The float module feed draper speed is fixed to the combine feeder house speed and cannot be independently adjusted.

Adjust the draper speed to achieve efficient crop feeding onto the float module feed draper. For instructions, refer to *Adjusting Side Draper Speed, page 112*.

Adjusting Side Draper Speed

The side drapers carry the cut crop to the float module feed draper, which then feeds it into the combine. The speed is adjustable to suit a variety of crops and crop conditions.

The side drapers (A) are driven by hydraulic motors and a pump that is powered by the combine feeder house drive through a gearbox on the float module. Side draper speed is adjustable with the flow control valve on the float module, which regulates the flow to the draper hydraulic motors. Draper speed is also adjustable with an optional control in the cab.

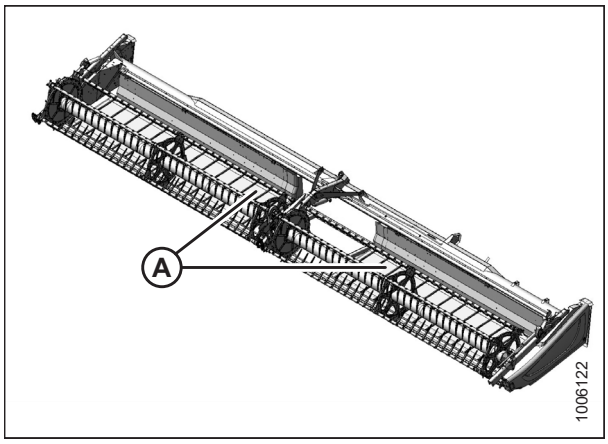

Figure 3.112: Side Drapers

Refer to the following steps to adjust the draper speed:

1. Lower the header fully.
2. Shut down the engine, and remove the key from the ignition.
3. Lift the cover (A) to open.

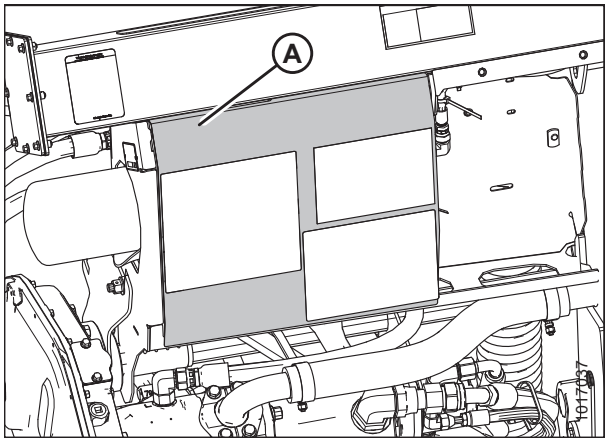

Figure 3.113: Hydraulic Compartment Cover

4. Locate side draper speed control (A). The speed control has settings from 0–9 on the barrel to indicate the draper speed. The flow control valve is factory-set to 6, which should be sufficient for normal crop feeding.
5. Shut down the engine, and remove the key from the ignition.
6. Rotate the flow control valve dial to adjust.
7. Refer to one of the following for recommended draper speed settings:
   - *3.7.2 Header Settings, page 46*
   - *3.7.3 Optimizing Header for Straight Combining Canola, page 57*

   NOTE:

   Parts removed from the illustration at right to show the control valve clearly.
8. If the optional in-cab side draper speed control kit is installed, rotate knob (A) to the desired speed setting. Set the knob to 6 for normal crop delivery. Switch (B) activates the header tilt or reel fore-aft controls. For instructions, refer to *Adjusting Header Angle from Combine, page 103*.

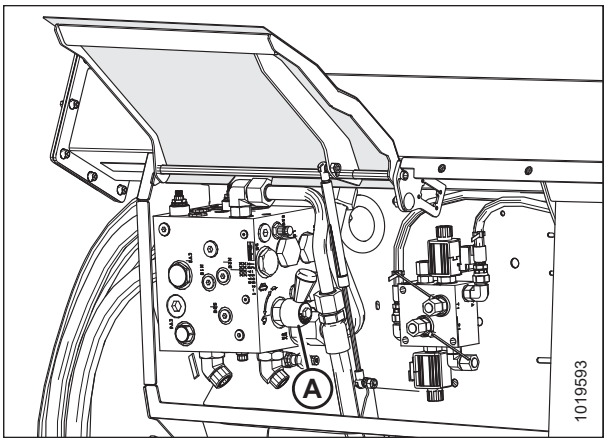

Figure 3.114: Flow Control Valve

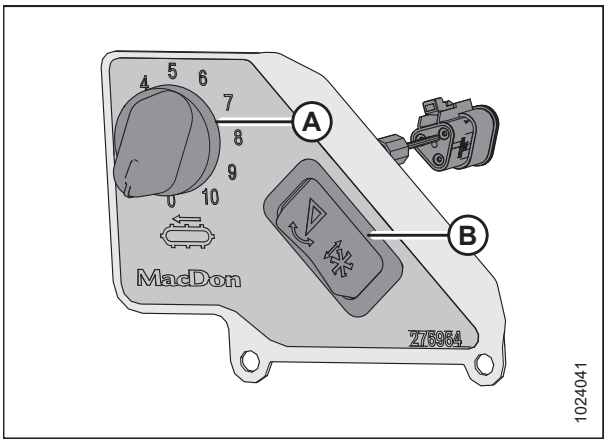

Figure 3.115: Optional In-Cab Side Draper Speed Control

Feed Draper Speed

The feed draper moves the cut crop from the side drapers into the float module feed auger.

The float module feed draper (A) is driven by a hydraulic motor and a pump that is powered by the combine feeder house drive through a gearbox on the float module.

The feed draper speed is determined by the combine feeder house speed and cannot be independently adjusted.

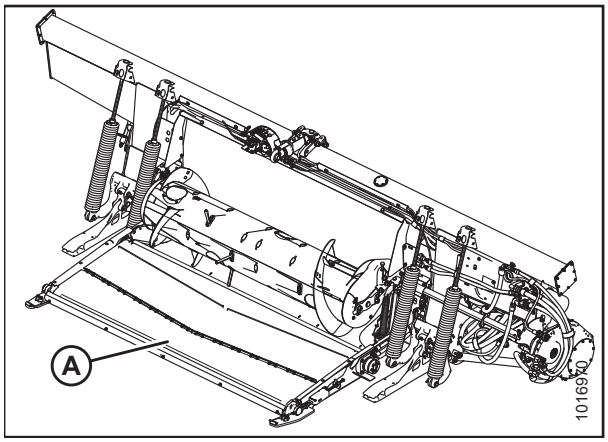

Figure 3.116: FM100 Float Module

3.8.8 Knife Speed Information

The header knife drive is powered by the FM100 hydraulic pump, which is driven by the combine feeder house. There is no separate adjustment to control the knife speed.

IMPORTANT:

For variable speed feeder houses, the rpm values shown at right represent the MINIMUM feeder house speeds.

Table 3.15 Feeder House Speed

Combine	Feeder House Speed (rpm)
Case IH	580
Challenger	625
CLAAS[46]	420
Gleaner	625
John Deere	490
Massey Ferguson	625
New Holland	580

46. The rear shaft speed on CLAAS combines is 420 rpm (speed shown on cab display monitor also will be 420). The output shaft speed is actually 750 rpm.

IMPORTANT:

Ensure the knife speed is within the range of rpm values in Table *3.16, page 115*. For instructions, refer to *Checking Knife Speed, page 116*.

IMPORTANT:

Under normal cutting conditions, knife speed taken at the knife drive pulley should be set between 600–640 rpm (1200–1280 spm). If set to low side of the range, you could experience knife stalling.

Table 3.16 D1 Series Header Knife Speed

Header Size m (ft.)	Recommended Knife Drive Speed Range (rpm)	
	Single-Knife Drive	Double-Knife Drive
7.6 m (25 ft.)	600–725	700–850[47]
9.1 m (30 ft.)	600–700	600–750[47]
10.7 m (35 ft.)	550–650	600–750[47]
12.2 m (40 ft.)	525–600	550–700
13.7 m (45 ft.)	—	550–700

47. Only available on headers configured for windrowers.

Checking Knife Speed

WARNING

To avoid injury or death from unexpected start-up of machine, always stop the engine and remove the key from the ignition before leaving the operator's seat for any reason.

1. Shut down the engine, and remove the key from the ignition.
2. Open the left endshield. For instructions, refer to *Opening Endshields, page 37*.

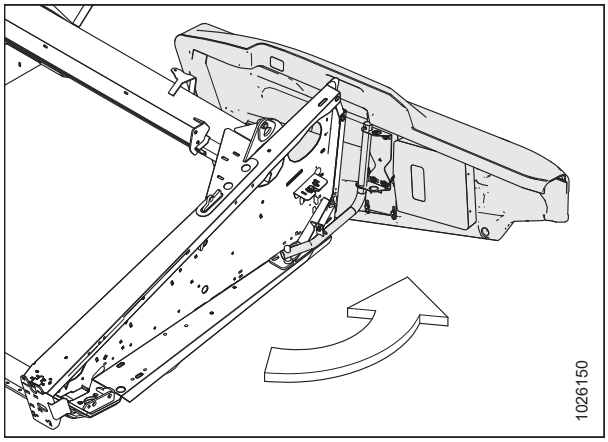

Figure 3.117: Left Endshield

WARNING

Check to be sure all bystanders have cleared the area.

3. Start the engine. For instructions, refer to the combine operator's manual.
4. Engage the header drive, and run the combine at operating rpm.
5. Run the machine for 10 minutes to warm up oil to 38°C (100°F).
6. Measure the rpm of the knife drive box pulley (A) with a hand-held tachometer.
7. Shut down the engine, and remove the key from the ignition.
8. Compare pulley rpm measurement with the rpm values in the knife speed chart. Refer to *3.8.8 Knife Speed Information, page 114*.
9. Contact your MacDon Dealer if the pulley rpm measurement exceeds the specified rpm range for your header.

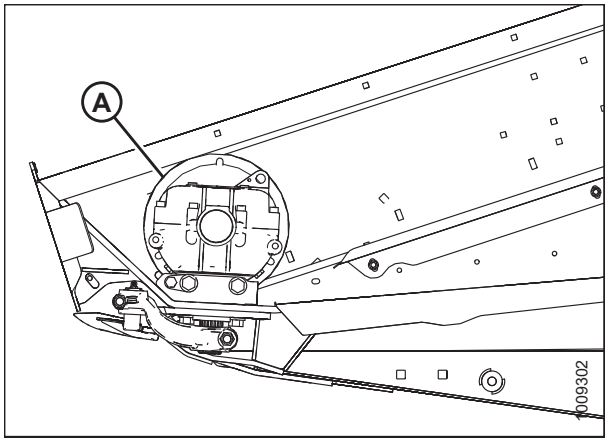

Figure 3.118: Knife Drive Pulley

3.8.9 Reel Height

The reel operating position depends on the type of crop and cutting conditions. Set the reel height and fore-aft position to carry material past the knife and onto the drapers with minimal damage to the crop. For more information, refer to *3.8.10 Reel Fore-Aft Position, page 123*.

The reel height is controlled manually or with button presets on the ground speed lever (GSL) in the combine cab. Refer to your combine operator's manual for instructions on controlling reel height or setting up auto reel height presets. Where applicable, this manual contains instructions for presetting reel height on selected combines. Refer to *3.9 Auto Header Height Control, page 148* for more information.

Table 3.17 Reel Height

Crop Condition	Reel Position
Lodged rice	Lowered (also change reel speed and/or cam setting)
Bushy or heavy standing (all)	Raised

The following conditions might result if the reel is set too low:

- Crop loss over the header backtube
- Crop disturbance on the drapers caused by the reel fingers
- Crop being pushed down by the tine tubes

The following conditions might result if the reel is set too high:

- Cutterbar plugging
- Crop lodging and being left uncut
- Grain stalks dropping ahead of cutterbar

For recommended reel heights for specific crops and crop conditions, refer to *3.7.2 Header Settings, page 46*.

IMPORTANT:

Maintain adequate clearance to prevent fingers contacting the knife or the ground. For instructions, refer to *5.13.1 Reel Clearance to Cutterbar, page 573*.

Checking and Adjusting Reel Height Sensor

The output voltage range of the auto reel height sensor can be checked from inside the combine or manually at the sensor. For in-cab instructions, refer to the combine operator's manual.

DANGER

To avoid bodily injury or death from unexpected start-up or fall of a raised machine, always stop engine and remove key before leaving the operator's seat, and always engage safety props before going under the machine for any reason.

WARNING

Check to be sure all bystanders have cleared the area.

IMPORTANT:

Ensure minimum reel height is properly set before adjusting reel height sensor. For instructions, refer to *5.13.1 Reel Clearance to Cutterbar, page 573 Measuring Reel Clearance, page 574*.

Figure 3.119: Sensor Arm/Pointer Configurations

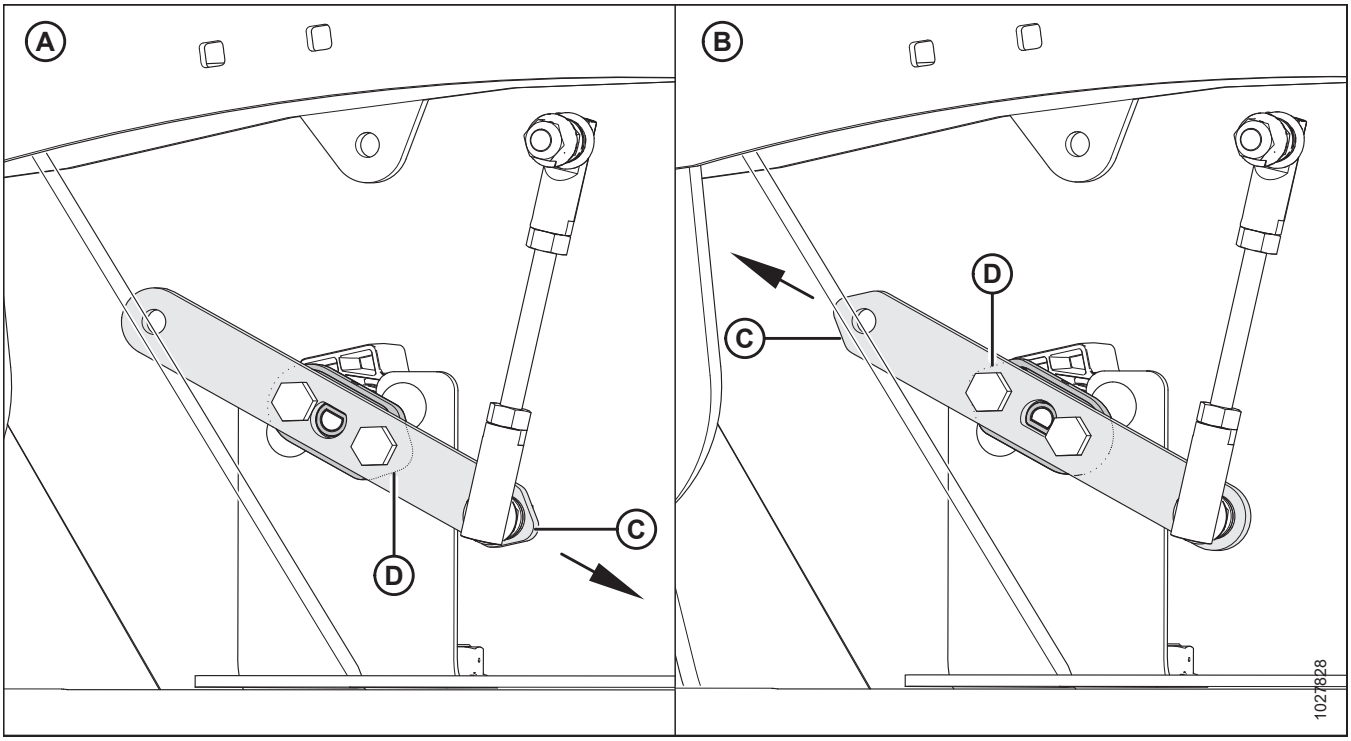

A - Case/New Holland Configuration

B - John Deere/CLAAS/AGCO IDEAL™ Configuration

C - Sensor Arm (Shown Semitransparent)

D - Sensor Pointer (Shown Under Sensor Arm)

NOTE:

- For configuration (A), pointer (D) points to the **FRONT** of the header.
- For configuration (B), pointer (D) points to the **REAR** of the header.
- Sensor arm made semitransparent to show sensor pointer behind it.

1. Shut down the engine, and remove the key from the ignition.
2. Check that sensor arm (C) and pointer (D) are configured properly for your machine. Refer to Figure *3.119, page 118*.

IMPORTANT:

To measure the output voltage of the reel height sensor, the combine engine needs to be running and supplying power to the sensor. Always engage the combine parking brake and stay away from the reel.

Table 3.18 Reel Height Sensor Voltage Limits

Combine Type	Voltage Range	
	X Voltage	Y Voltage
AGCO IDEAL™ Series	4.1–4.5 V	0.5–0.9 V
Case/New Holland	0.5–0.9 V	4.1–4.5 V
CLAAS	4.1–4.5 V	0.5–0.9 V
John Deere	4.1–4.5 V	0.5–0.9 V

NOTE:

For CLAAS combines: To avoid a collision of the reel with the cab, the machine is equipped with an automatic reel height limitation. Some CLAAS combines have an automatic shutoff feature that engages when the automatic reel height limitation is reached. When raising the header by more than 80 percent, the reel is automatically lowered. The automatic lowering of the reel can be manually overridden, and a warning will appear on the CEBIS terminal.

To check the voltage range manually, follow these steps:

1. Engage the combine parking brake.
2. Start the engine and fully lower the reel.
3. Use the combine display or a voltmeter (if measuring the sensor manually) to measure voltage range **Y**. Refer to Table *3.18, page 119* for range requirements.
4. If using a voltmeter, measure the voltage between the ground wire (pin 2) and the signal wire (pin 3) at the reel height sensor (B).
5. Shut down the engine, and remove the key from the ignition.
6. Adjust length of threaded rod (A) to modify voltage range **Y**.

   NOTE:

   Dimension (C) is factory set to 41.7 mm (1.6 in).
7. Repeat checking and adjusting until voltage range **Y** is within the range specified.

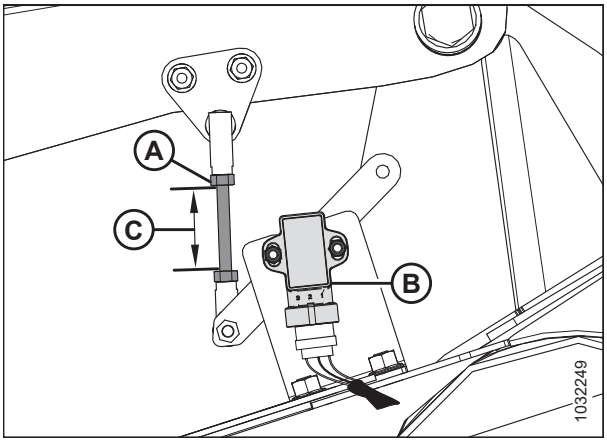

Figure 3.120: Reel Height Sensor – Right Reel Arm with Reel Down

8. Start the engine.
9. Raise the reel fully.
10. Engage the reel safety props.
11. Engage the reel safety props. For instructions, refer to *Engaging Reel Safety Props, page 35*.
12. Use the combine display or a voltmeter (if measuring the sensor manually) to measure voltage range **X**. Refer to Table *3.18, page 119* for range requirements.
13. If using a voltmeter, measure the voltage between the ground (Pin 2 wire) and the signal (Pin 3 wire) at the reel height sensor (A).
14. Shut down the engine, and remove the key from the ignition.
15. Loosen two M5 hex nuts (B) and rotate sensor (A) to achieve voltage range **X**.
16. Repeat checking and adjusting until voltage range **X** is within the range specified.
17. Start the engine. For instructions, refer to the combine operator's manual.
18. Disengage the reel safety props. For instructions, refer to *Disengaging Reel Safety Props, page 36*.
19. Lower the reel fully.
20. Recheck voltage range **Y** and ensure it is still within the range specified. Adjust if required.

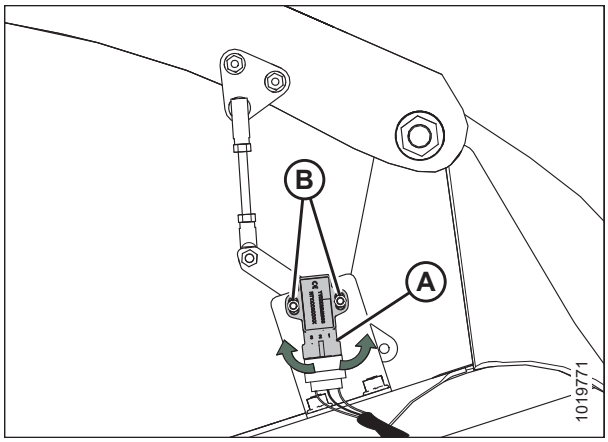

Figure 3.121: Reel Height Sensor – Right Reel Arm with Reel Up

Replacing Reel Height Sensor

DANGER

To avoid bodily injury or death from unexpected startup of machine, always stop the engine and remove the key before making adjustments to the machine.

1. Start the engine. For instructions, refer to the combine operator's manual.
2. Lower the header fully.
3. Shut down the engine, and remove the key from the ignition.
4. Disconnect the sensor from the harness.
5. Remove two hex head bolts (A) from sensor arm (B). Retain hardware for reinstallation.

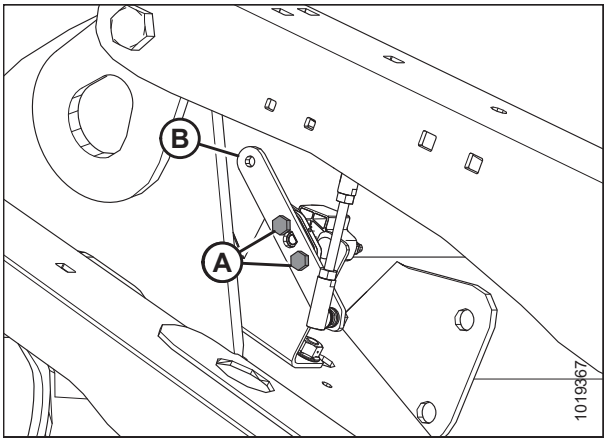

Figure 3.122: Reel Height Sensor – Right Reel Arm

6. Remove two nyloc nuts and bolts (A) from reel height sensor and remove sensor (B).
7. Install new sensor (B) in sensor bracket and attach using retained bolts (A) and nyloc nuts. Torque bolts (A) to 2–3 Nm (17–27 lbf·in.).

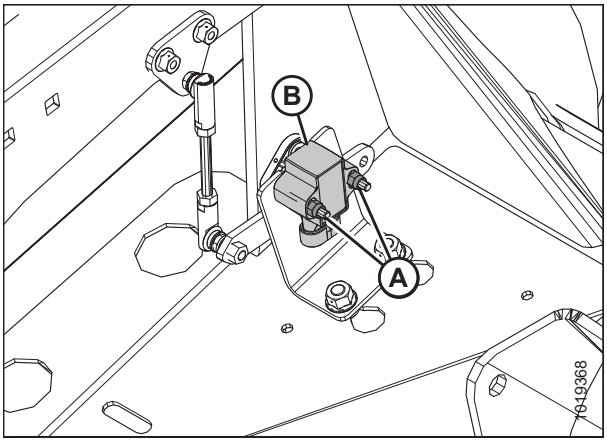

Figure 3.123: Reel Height Sensor – Right Reel Arm

8. Connect sensor arm (B) using retained hex head bolts (A). Torque hex head bolts (A) to 4 Nm (35 lbf·in.).
9. Connect the sensor to the harness.

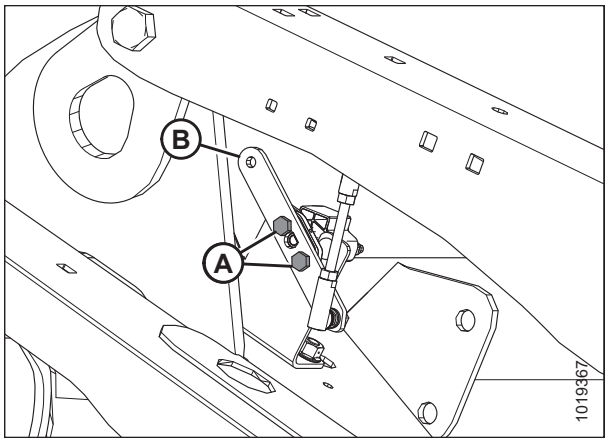

Figure 3.124: Reel Height Sensor – Right Reel Arm

10. Check that the sensor arm and the threaded rod are parallel. If not, loosen two center lock flange nuts (A), and adjust sensor mounting bracket (B) until threaded rod (C) is parallel with sensor arm (D). Tighten center lock flange nuts.
11. Check the sensor voltage range. For instructions, refer to *Checking and Adjusting Reel Height Sensor, page 118*.

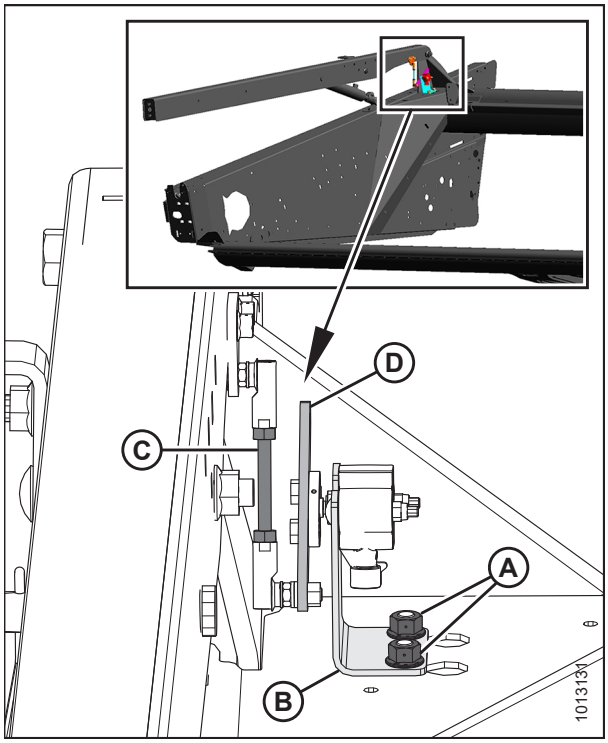

Figure 3.125: Reel Height Sensor – Front View of Right Reel Arm

3.8.10 Reel Fore-Aft Position

Reel fore-aft position is a critical factor for achieving the best results in adverse conditions. The factory-set reel position suits normal conditions, but the fore-aft position can be adjusted as required using the controls inside the cab.

Decal (A) is attached to the right reel support arm for identifying reel position. The aft edge of the cam disc (B) is the reel fore-aft position marker.

For straight standing crop, center the reel over the cutterbar (4–5 on decal).

For crops that are down, tangled, or leaning, it may be necessary to move the reel ahead of the cutterbar (lower number on decal).

NOTE:

If experiencing difficulty picking up flattened crop, adjust to a steeper header angle. Refer to *3.8.4 Header Angle, page 101* for adjustment instructions. Adjust reel position only if header angle adjustments are not satisfactory.

For recommended reel positions in specific crops and crop conditions, refer to *3.7.2 Header Settings, page 46*.

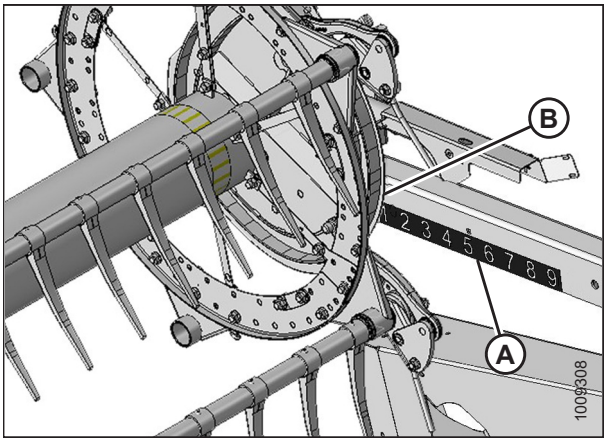

Figure 3.126: Fore-Aft Decal

NOTE:

In crops that are difficult to pick up such as rice, or severely lodged crops that require full forward positioning of the reel, set the reel tine pitch to provide proper placement of the crop onto the drapers. Refer to *3.8.11 Reel Tine Pitch, page 136* for adjustment details.

Adjusting Reel Fore-Aft Position

1. Select FORE-AFT mode on the selector switch in the cab.
2. Operate the hydraulics to move the reel to the desired position while using the decal (A) as a reference.
3. Check the reel clearance to cutterbar after making changes to the cam setting. Refer to the following for measurement and adjustment procedures:
   - *5.13.1 Reel Clearance to Cutterbar, page 573*
   - *5.13.2 Reel Frown, page 577*

   IMPORTANT:

   Operating with the reel too far forward can result in the fingers contacting the ground. When operating with the reel in this position, lower the skid shoes or adjust the header tilt as required to prevent damaging the fingers.

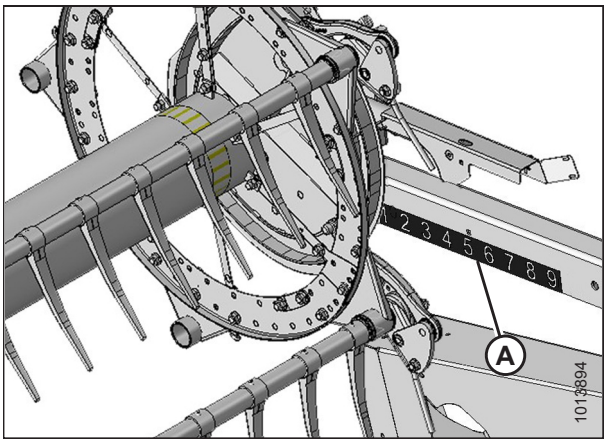

Figure 3.127: Fore-Aft Decal

Repositioning Fore-Aft Cylinders on Single Reel

The reel can be moved approximately 227 mm (9 in.) farther aft by repositioning the fore-aft cylinders on the reel arms. This may be desirable when straight-combining canola.

DANGER

To avoid injury or death from unexpected start-up of machine, always stop the engine and remove the key from the ignition before leaving the operator's seat for any reason.

Reposition the right reel arm cylinder as follows:

NOTE:

Reel components not shown in illustrations for improved clarity.

1. Position reel fully aft with support arms horizontal.
2. Stop the engine and remove the key from the ignition.
3. Remove four nuts and bolts (A) securing cylinder bracket (B) to reel arm (C). Retain hardware.

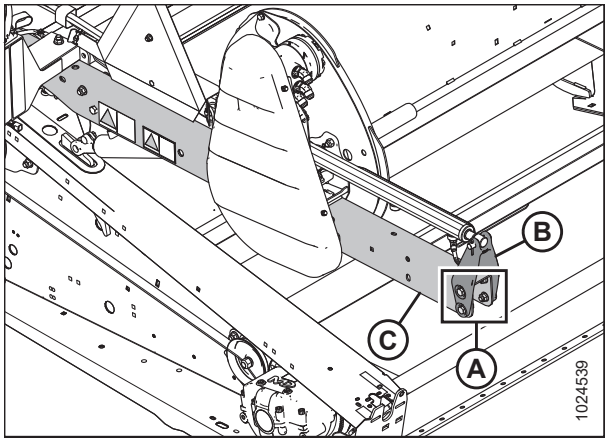

Figure 3.128: Right Reel Arm Cylinder in Forward Position

4. Push/pull the reel until bracket (B) lines up with the aft set of holes in the reel arm (C).
5. Reinstall the four nuts and bolts (A) and secure the cylinder bracket (B) to the reel arm at the new position.

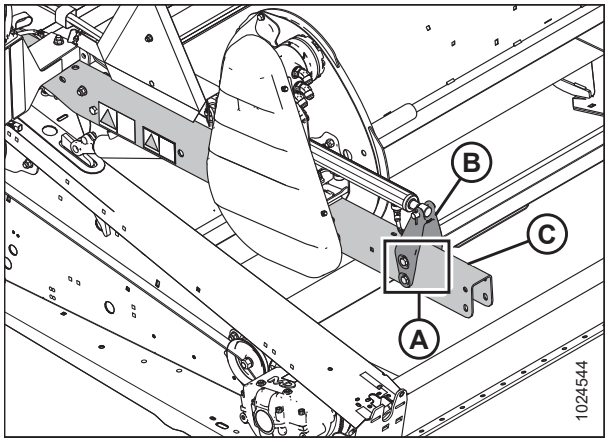

Figure 3.129: Right Reel Arm Cylinder in Aft Position

Reposition the left reel arm cylinder as follows:

NOTE:

Reel components not shown in illustrations for improved clarity.

1. Remove pin (A) securing cylinder (B) to bracket/light assembly (C).
2. Remove nuts and bolts (D) securing bracket/light assembly (C) to the reel arm, and remove the bracket/light assembly.
3. If necessary, remove the cable tie securing the harness to bracket/light assembly (C) or reel arm.
4. Swivel the light to the working position as shown.

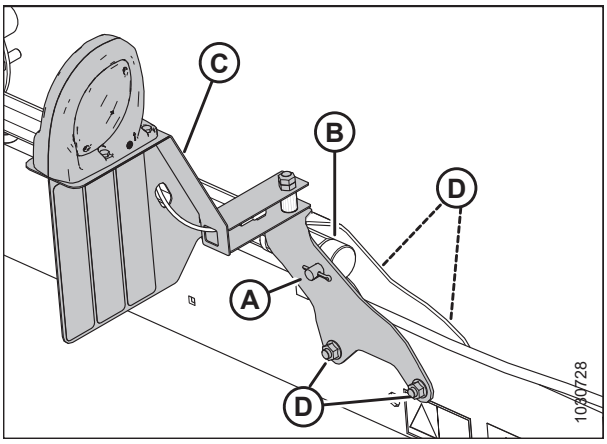

Figure 3.130: Left Reel Arm Cylinder in Forward Position

5. Reposition bracket/light assembly (C) on the reel arm as shown, and secure with four nuts and bolts (D). Tighten hardware.
6. Push the reel back and attach cylinder (B) to bracket/light assembly (C) with pin (A). Secure pin with cotter pin.
7. Secure the light harness to bracket/light assembly (C) using a cable tie.
8. Check the reel clearance to the backsheet, upper cross auger (if installed), and reel braces.
9. Adjust the reel tine pitch if necessary. For instructions, refer to *3.8.11 Reel Tine Pitch, page 136*.

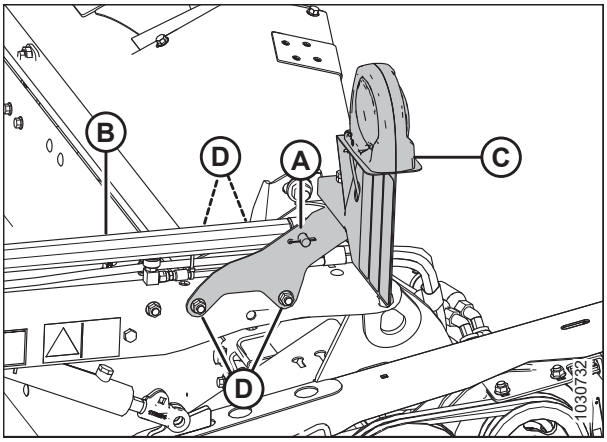

Figure 3.131: Left Reel Arm Cylinder in Aft Position

Repositioning Fore-Aft Cylinders on Double Reel

The reel can be moved approximately 227 mm (9 in.) farther aft by repositioning the fore-aft cylinders on the reel arms. This may be desirable when straight-combining canola.

NOTE:

Short Brace Kit for Center Reel Arm (MD #B5605) must be installed before repositioning fore-aft cylinders.

If the Multi-Crop Rapid Reel Conversion option is installed, refer to *Repositioning Fore-Aft Cylinders with Multi-Crop Rapid Reel Conversion Option, page 129*.

NOTE:

The Multi-Crop Rapid Reel Conversion option is **NOT** available for European-configured headers.

DANGER

To avoid injury or death from unexpected start-up of machine, always stop the engine and remove the key from the ignition before leaving the operator's seat for any reason.

Reposition the center reel arm cylinder as follows:

NOTE:

Some reel components are not shown in illustrations for improved clarity.

1. Position reel fully aft with support arms horizontal.
2. Stop engine and remove key.
3. Remove four nuts and bolts (A) securing cylinder bracket (B) to reel arm (C). Retain hardware.

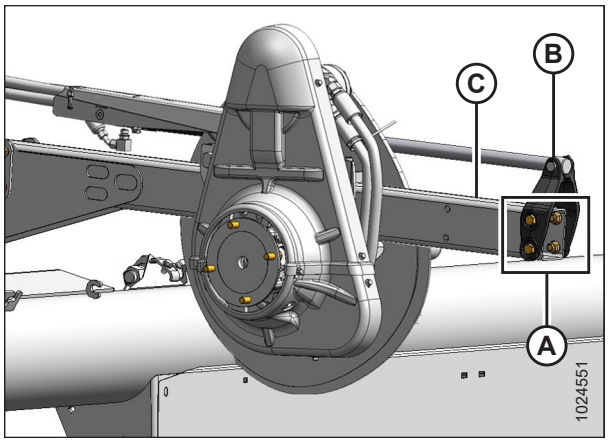

Figure 3.132: Center Arm – Forward Position

4. Push/pull reel until bracket (B) lines up with the aft set of holes in reel arm (C).
5. Reinstall four nuts and bolts (A) to secure bracket (B) to reel arm at new position.

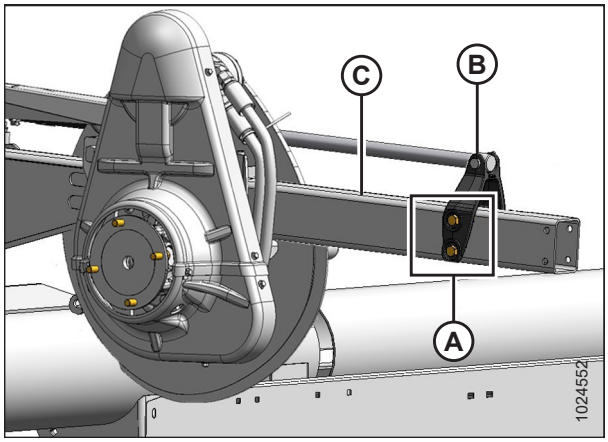

Figure 3.133: Center Arm – Aft Position

Reposition the right reel arm cylinder as follows:

NOTE:

Some reel components are not shown in illustrations for improved clarity.

1. Remove four bolts (A) securing cylinder bracket (B) to reel arm (C).

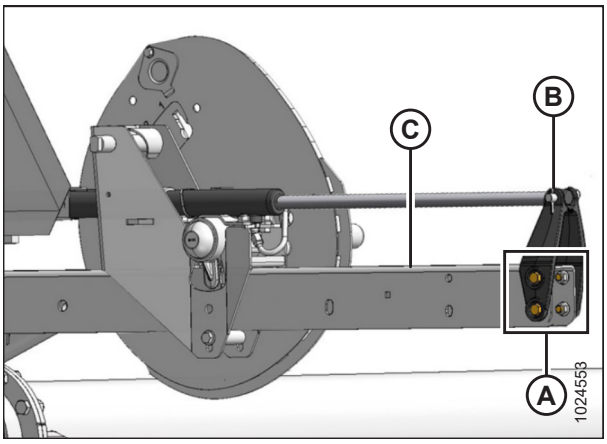

Figure 3.134: Right Reel Arm Cylinder in Forward Position

2. Push reel back until bracket (B) lines up with the aft set of holes in reel arm (C).
3. Reinstall four bolts (A) to secure bracket to reel arm at new position.

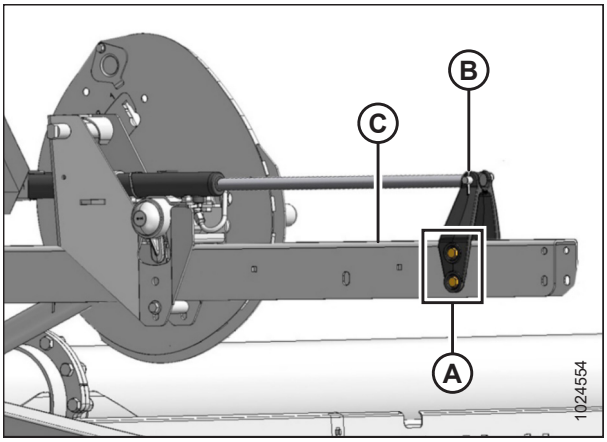

Figure 3.135: Right Reel Arm Cylinder in Aft Position

Reposition the left reel arm cylinder as follows:

NOTE:

Some reel components are not shown in illustrations for improved clarity.

1. Remove pin (A) securing cylinder (B) to bracket/light assembly (C).
2. Remove four nuts and bolts (D) securing bracket/light assembly (C) to reel arm and remove bracket/light assembly. Retain hardware.
3. Remove cable tie (not shown) securing harness to bracket/light assembly (C) or to reel arm (if necessary).
4. Swivel light to working position as shown.

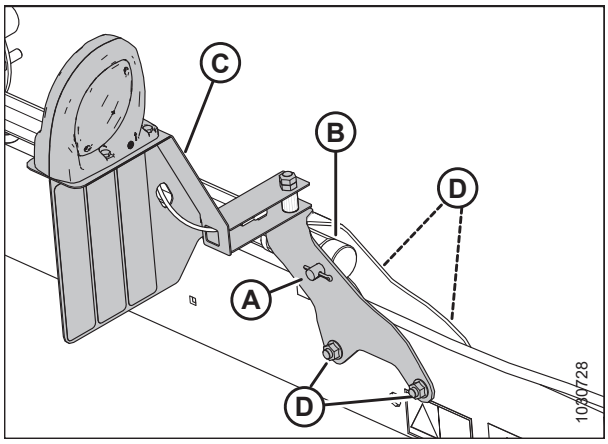

Figure 3.136: Left Reel Arm Cylinder in Forward Position

5. Reposition bracket/light assembly (C) onto reel arm as shown, and secure using four nuts and bolts (D). Tighten hardware.
6. Push reel back and reinstall cylinder (B) onto bracket/light assembly (C) using pin (A). Secure pin with cotter pin.
7. Secure light harness to bracket/light assembly (C) or to reel arm using plastic cable tie (not shown).
8. Check reel clearance to backsheet, upper cross auger (if installed), and reel braces.
9. Adjust reel tine pitch (if required). For adjustment procedures, refer to *3.8.11 Reel Tine Pitch, page 136*.

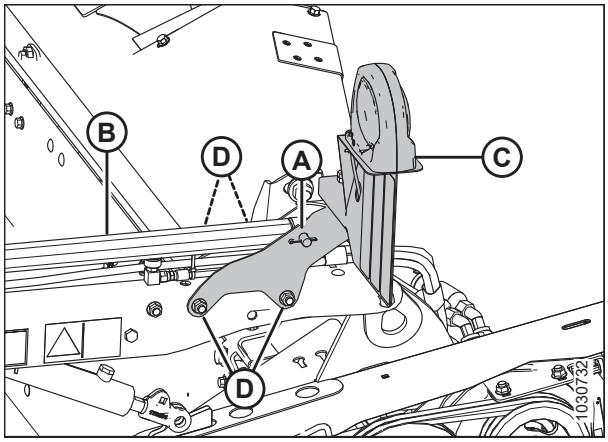

Figure 3.137: Left Reel Arm Cylinder in Aft Position

Repositioning Fore-Aft Cylinders with Multi-Crop Rapid Reel Conversion Option

The reel can be moved approximately 227 mm (9 in.) farther aft by repositioning the fore-aft cylinders on the reel arms. The Multi-Crop Rapid Reel Conversion option is applicable to **double-reel headers only**.

NOTE:

Short Brace Kit for Center Reel Arm (MD #B5605) must be installed before repositioning fore-aft cylinders.

NOTE:

Multi-Crop Rapid Reel Conversion option is **NOT** available for European-configured headers.

DANGER

To avoid injury or death from unexpected start-up of machine, always stop the engine and remove the key from the ignition before leaving the operator's seat for any reason.

Reposition the left reel arm cylinder as follows:

NOTE:

Some reel components not shown in illustrations for improved clarity.

1. Position reel fully aft with support arms horizontal.
2. Shut down the engine, and remove the key from the ignition.
3. Remove ring (A) and clevis pin (B) from inboard side of bracket (C). Retain ring and clevis pin.
4. Push the reel back until cylinder barrel (D) lines up with reel position 2 hole on bracket.
5. Reinstall clevis pin (B) at the new position and secure with ring (A).

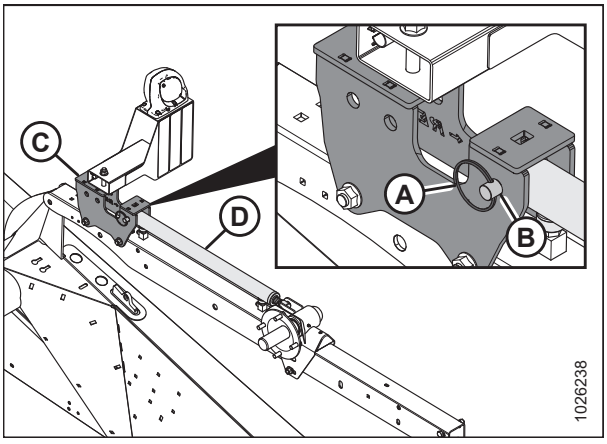

Figure 3.138: Left Reel Arm in Forward Position

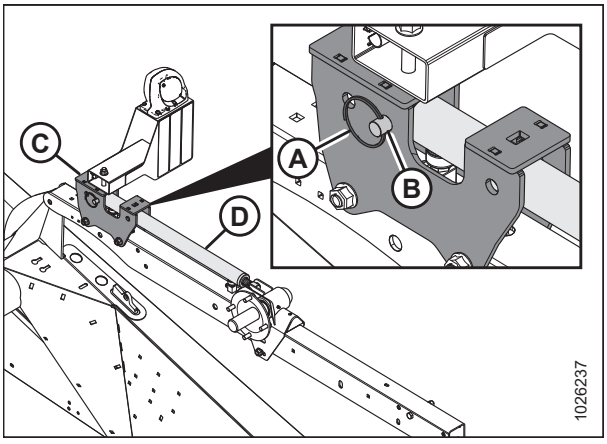

Figure 3.139: Left Reel Arm in Aft Position

Reposition the center reel arm cylinder as follows:

NOTE:

Some reel components not shown in illustrations for improved clarity.

1. Remove ring (A), clevis pin (B), and washers (C) from bracket (D). Retain ring, clevis pin, and washers.

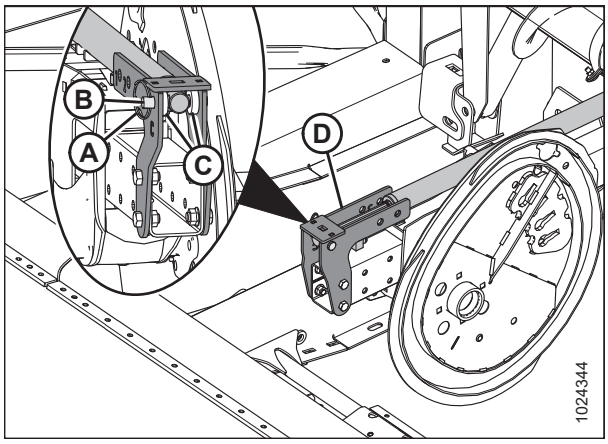

Figure 3.140: Center Reel Arm in Forward Position

2. Push the reel back until the end of cylinder (E) lines up with reel position 2 hole on bracket (D). Position washers (C) on both sides of the cylinder end inside the bracket.
3. Reinstall clevis pin (B) at the new position and secure with ring (A).

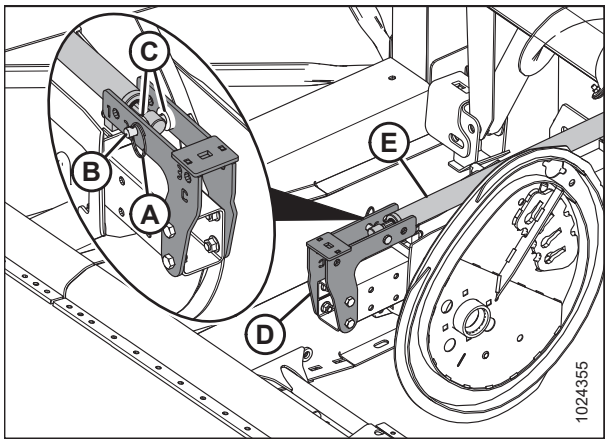

Figure 3.141: Center Reel Arm in Aft Position

Reposition the right reel arm cylinder as follows:

NOTE:

Some reel components not shown in illustrations for improved clarity.

1. Remove ring (A), clevis pin (B), and washers (C) from bracket (D). Retain ring, clevis pin, and washers.
2. Push the reel back until end of cylinder (E) lines up with reel position 2 hole on bracket (D).

   NOTE:

   Washers inside center arm support bracket not shown in illustration at right.
3. Reinstall clevis pin (B) at the new position and secure with ring (A).

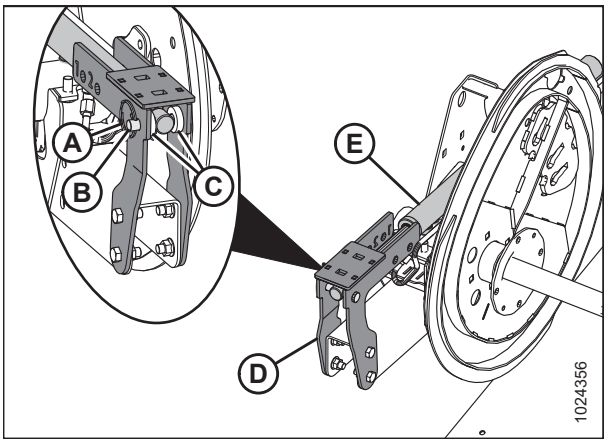

Figure 3.142: Right Reel Arm in Forward Position

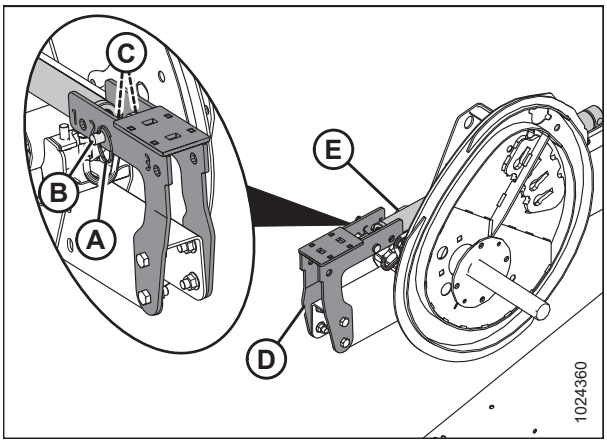

Figure 3.143: Right Reel Arm in Aft Position

Repositioning Fore-Aft Cylinders on European-Configured Headers

The reel can be moved approximately 67 mm (2.6 in.) farther aft from factory setting by repositioning the fore-aft cylinders on the reel arms. This may be desirable when straight-combining canola.

For instructions for repositioning the fore-aft cylinders on a non-European-configured header, refer to *Repositioning Fore-Aft Cylinders on Double Reel, page 126*.

Reposition center reel arm cylinder as follows:

NOTE:

Some reel components are not shown in illustrations for improved clarity.

NOTE:

Reels on European-configured headers are at their most forward setting when cylinders are set in position 2 on the fore-aft arm brackets. Reels on these headers are in their most aft position when cylinders are set in position 1 on the fore-aft arm brackets.

1. Remove securing ring (A), pin (B), and washers inside center arm fore-aft support bracket (C). Retain washers, pin, and ring.

   NOTE:

   Washers inside center arm support bracket not shown in illustration at right.

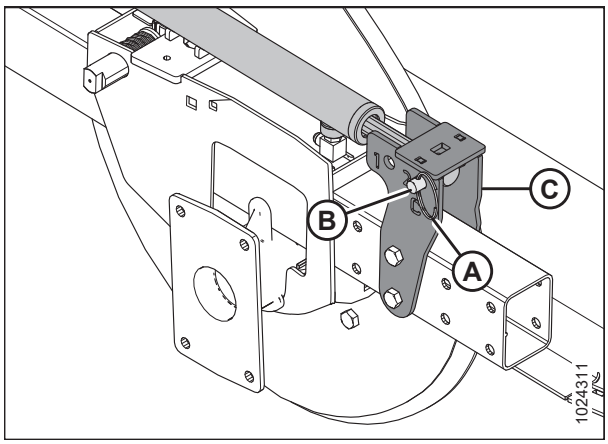

Figure 3.144: Center Reel Arm in Forward Position

2. Push the reel back until the end of cylinder (A) lines up with aft setting holes (B) (position 1) in fore-aft support bracket (C). Position washers (D) on both sides of cylinder end (A) inside support bracket (C).

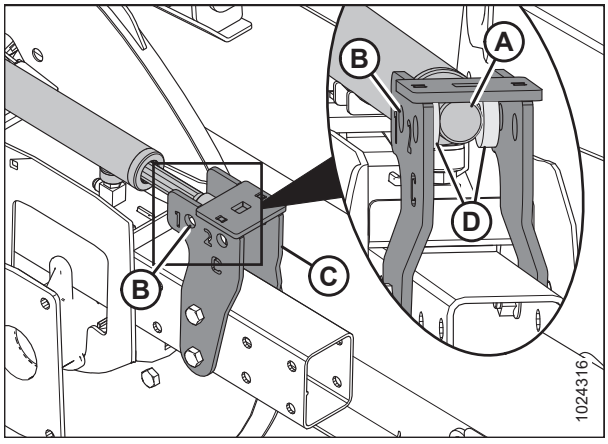

Figure 3.145: Center Reel Arm

3. Insert pin (A) and secure cylinder (B) and washers in center arm support bracket (C). Secure pin (A) with ring (D).

   NOTE:

   Washers inside center arm support bracket not shown in illustration at right.

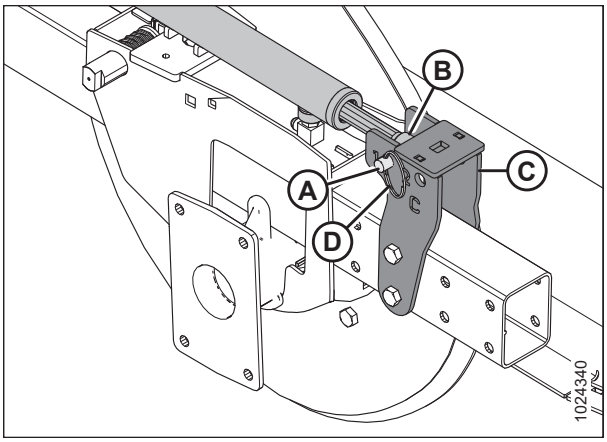

Figure 3.146: Center Reel Arm in Aft Position

Reposition right reel arm cylinder as follows:

NOTE:

Some reel components are not shown in illustrations for improved clarity.

NOTE:

Reels on European-configured headers are at their most forward setting when cylinders are set in position 2 on the fore/aft arm brackets. Reels on these headers are in their most aft position when cylinders are set in position 1 on the fore-aft arm brackets.

1. Remove ring (A), pin (B), and washers (D) securing reel arm cylinder (C) to the interior of the right fore-aft arm bracket. Retain washers, ring, and pin.

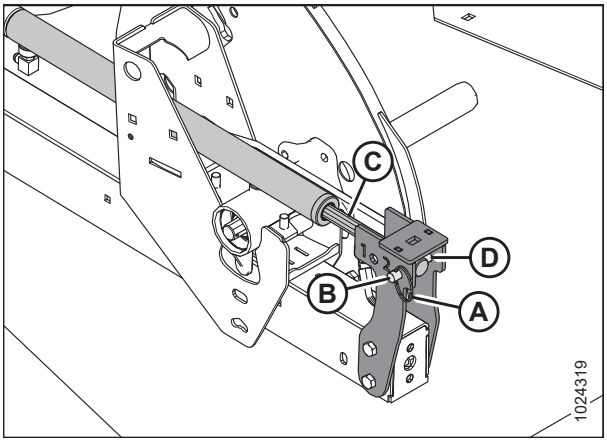

Figure 3.147: Right Reel Arm Cylinder in Forward Position

2. Push the reel back until the end of cylinder (A) lines up with aft setting holes (B) in support bracket (C). Position washers (D) on both sides of cylinder end (A) inside support bracket (C).

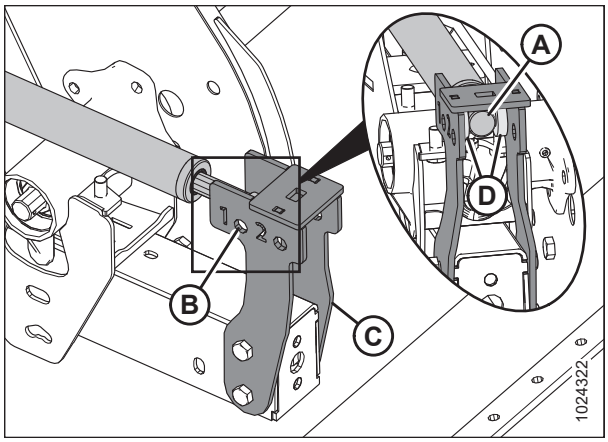

Figure 3.148: Right Reel Arm Cylinder

3. Insert pin (A) into the aft setting holes, and through cylinder end (C) and washers (D). Secure the pin with ring (B).

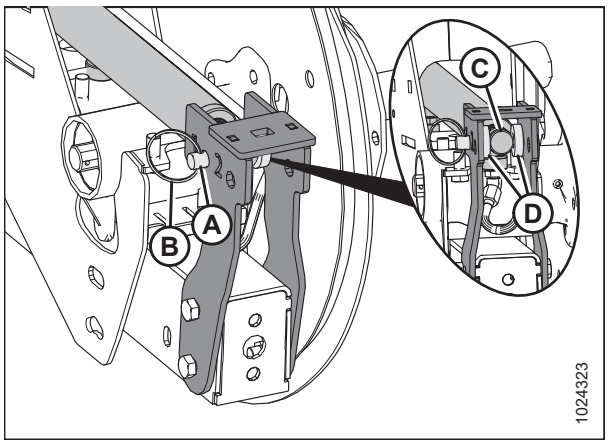

Figure 3.149: Right Reel Arm Cylinder in Aft Position

Reposition left reel arm cylinder as follows:

NOTE:

Some reel components are not shown in illustrations for improved clarity.

NOTE:

Reels on European-configured headers are at their most forward setting when cylinders are set in position 2 on the support brackets. Reels on these headers are in their most aft position when cylinders are set in position 1 on the support brackets.

1. Remove ring (A) and pin (B) inside the left fore-aft support bracket (D) securing cylinder (C). Retain pin and ring.

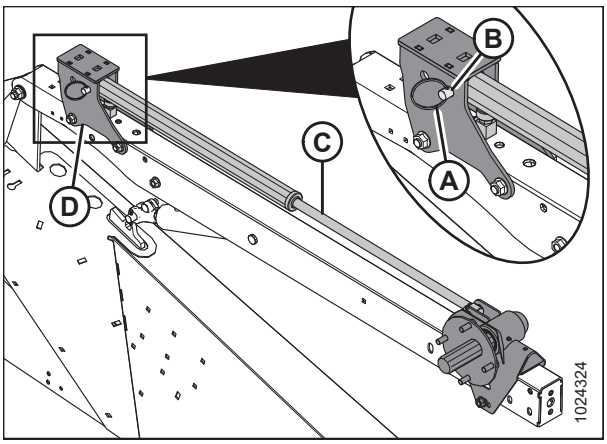

Figure 3.150: Left Reel Arm Cylinder in Forward Position

2. Push reel back toward the header until the end of cylinder (A) lines up with aft setting holes (B) (position 1) in the support bracket (C).

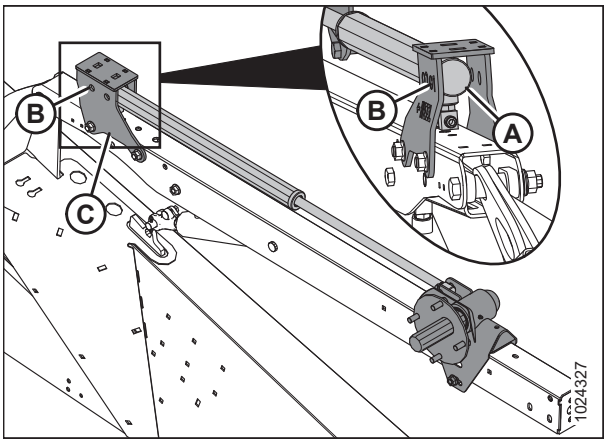

Figure 3.151: Left Reel Arm Cylinder

3. Insert clevis pin (A) into the aft setting holes in support bracket (B) and through the end of the cylinder (C). Secure pin with ring (D).
4. Check the reel clearance to the backsheet, upper cross auger (if installed), and reel braces.
5. Adjust the reel tine pitch if necessary. For instructions, refer to *3.8.11 Reel Tine Pitch, page 136*.

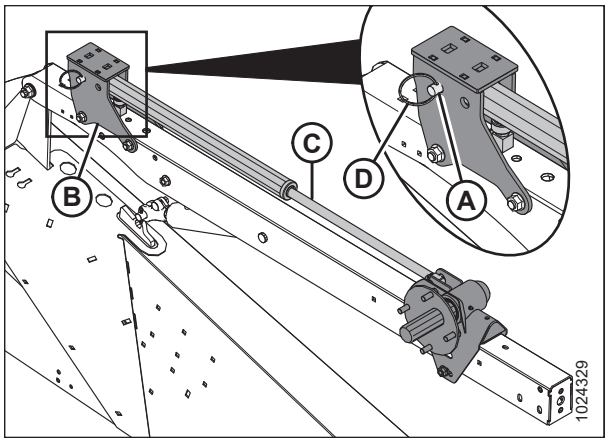

Figure 3.152: Left Reel Arm Cylinder in Aft Position

3.8.11 Reel Tine Pitch

IMPORTANT:

The following describes the conceptual and operational guidelines of the pick-up reel. Please read carefully before operating the machine.

The pick-up reel is designed to pick up flattened and severely lodged crops. Because the cam setting is mainly used to determine how the crop gets delivered onto the drapers, it is not always necessary to increase the tine pitch (select a higher cam setting) to pick up lodged crops.

The positioning of the fingers relative to the ground (tine pitch) is not significantly affected by the cam setting. For example, with the cam position range at 33°, the corresponding finger pitch range is only 5° at the lowest point of the reel's rotation.

For the best results, use the minimum cam setting that delivers the crop past the rear edge of the cutterbar and onto the drapers.

Reel Cam Settings

The following outlines the function of each cam setting and provides set-up guidelines for various crop conditions.

The setting numbers are visible above the slots on the cam disc. For instructions, refer to *Adjusting Reel Cam, page 138*.

Cam Position 1, Reel Position 6 or 7 delivers the most even crop flow onto the drapers without fluffing or disturbing the material.

- This setting will release crop close to the cutterbar and works best if the cutterbar is on the ground.
- Some crops will not be delivered past the cutterbar when the cutterbar is raised off the ground and the reel is pushed forward; therefore, set the initial reel speed approximately equal to the ground speed.

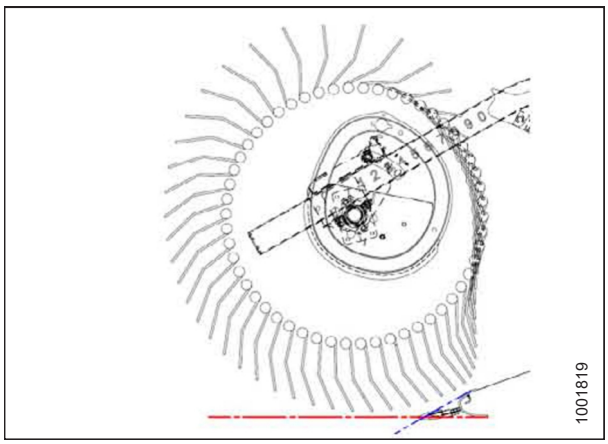

Figure 3.153: Finger Profile – Position 1

Cam Position 2, Reel Position 3 or 4 is the recommended starting position for most crops and conditions.

- If the crop is stalling on the cutterbar when the reel is in the forward position, increase the cam setting to push the crop past the rear edge of the cutterbar.
- If the crop is getting fluffed or if there is a disruption to the flow across the drapers, decrease the cam setting.
- This setting generates a fingertip speed that is approximately 20% faster than the reel speed.

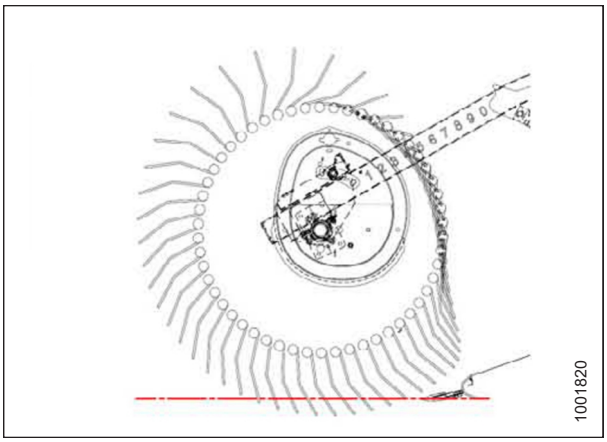

Figure 3.154: Finger Profile – Position 2

Cam Position 3, Reel Position 6 or 7 is mainly used to leave long stubble.

- This position allows the reel to reach forward and lift the crop across the knife and onto the drapers.
- This setting generates a fingertip speed that is approximately 30% faster than the reel speed.

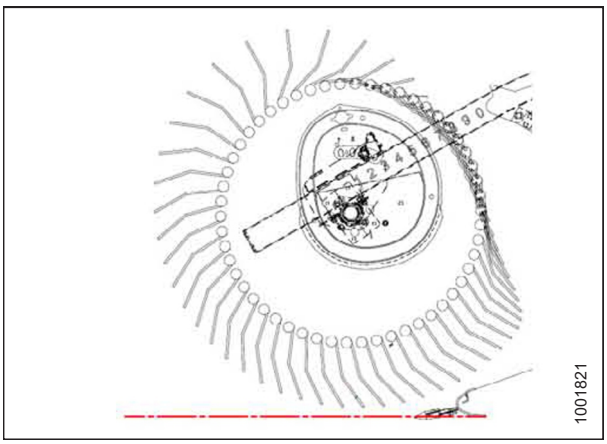

Figure 3.155: Finger Profile – Position 3

Cam Position 4, Reel Position 2 or 3 is used with the reel fully forward to leave the maximum amount of stubble in lodged crops.

- This position allows the reel to reach forward and lift the crop across the knife and onto the drapers.
- This setting generates a fingertip speed that is approximately 35% faster than the reel speed.

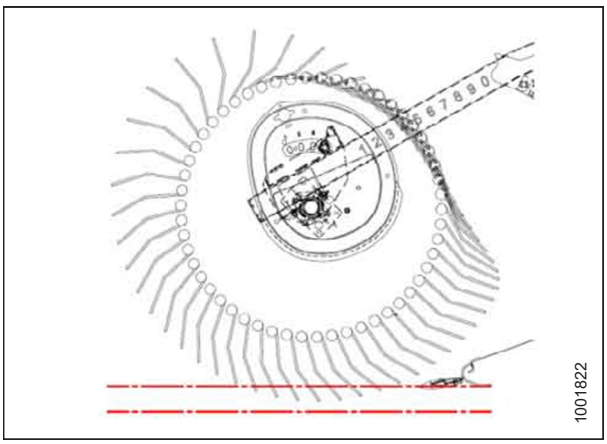

Figure 3.156: Finger Profile – Position 4

Cam Position 4, Header Angle at Maximum, and Reel Fully Forward provides the maximum amount of reel reach below the cutterbar to pick up lodged crops.

- Leaves a significant amount of stubble when cutting height is set to approximately 203 mm (8 in.). In damp materials such as rice, it is possible to double the ground speed because of the reduction of cut material.
- This setting generates a fingertip speed that is approximately 35% faster than the reel speed.

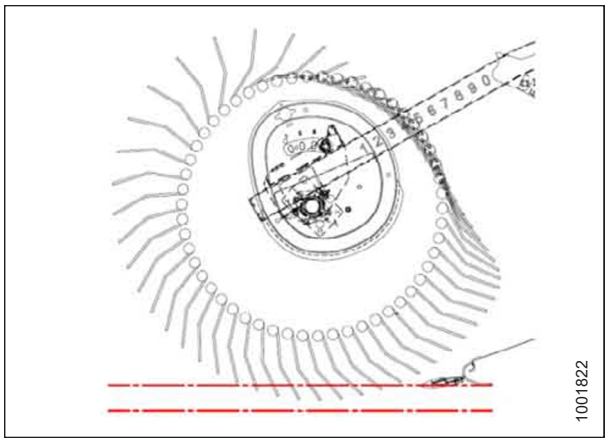

Figure 3.157: Finger Profile – Position 4

IMPORTANT:

The reel to cutterbar clearance should always be checked following adjustments to reel tine pitch and reel fore-aft positions (refer to *5.13.1 Reel Clearance to Cutterbar, page 573*). Refer to for recommended reel tine pitch in specific crops and crop conditions.

NOTE:

Higher cam settings with the reel fore-aft position set between 4–5 sharply decrease the draper capacity because the reel disrupts the crop flow across the drapers and the fingers engage the crop that is moving on the drapers. High cam settings are recommended only with the reel at, or close to, full forward settings.

Adjusting Reel Cam

DANGER

To avoid injury or death from unexpected start-up of machine, always stop the engine and remove the key from the ignition before leaving the operator's seat for any reason.

1. Turn latch pin (A) counterclockwise using a 3/4 in. wrench to release the cam disc.
2. Use the wrench on bolt (B) to rotate the cam disc and align latch pin (A) with the desired cam disc hole position (C) (1 to 4).

   NOTE:

   Bolt (B) is positioned through the cam disc (transparent view shown in illustration for improved clarity).
3. Turn latch pin (A) clockwise to engage and lock the cam disc.
4. Repeat above procedure for the opposite reel.

   IMPORTANT:

   Ensure the cam is secured into position before operating the machine.

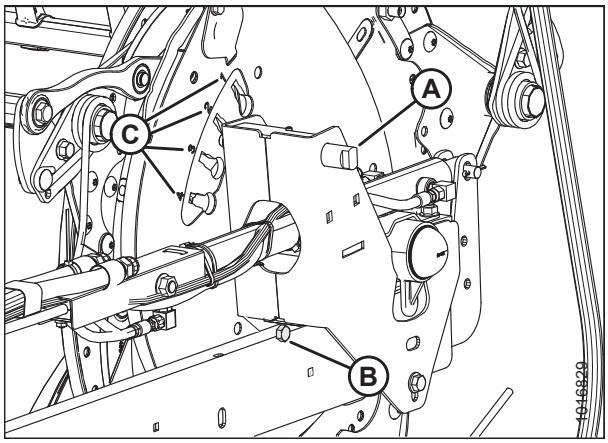

Figure 3.158: Cam Disc Positions

3.8.12 Crop Dividers

Crop dividers are used to help divide the crop when harvesting. They are removable to allow installation of vertical knives and to decrease transport width.

Removing Crop Dividers with Latch Option from Header

DANGER

To avoid bodily injury or death from unexpected start-up or fall of raised machine, always stop engine, remove key, and engage safety props before going under header for any reason.

1. Lower the reel fully. For instructions, refer to your combine operator's manual.
2. Raise the header. For instructions, refer to your combine operator's manual.
3. Shut down the engine, and remove the key from the ignition.
4. Engage the safety props. For instructions, refer to your combine operator's manual.
5. Open the endshield. For instructions, refer to *Opening Endshields, page 37*.
6. Lift safety lever (A).
7. Hold onto crop divider (B), push lever (C) to open latch, and lower crop divider.

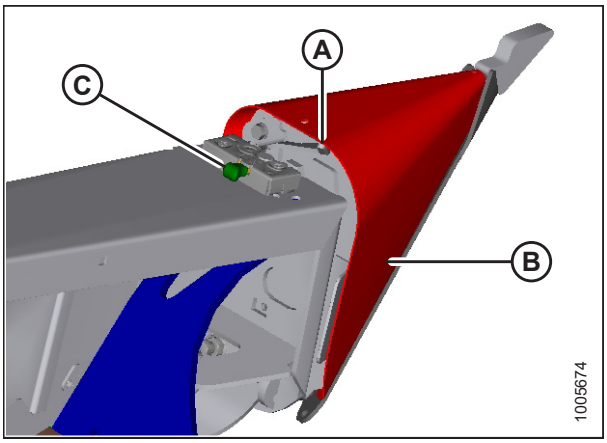

Figure 3.159: Crop Divider

8. Lift crop divider off endsheet and store as follows:
   a. Insert pin (A) on crop divider into hole in endsheet at location shown.
   b. Lift crop divider and position lugs (B) on crop divider into bracket on endsheet. Ensure lugs engage bracket.
9. Close the endshield. For instructions, refer to *Closing Endshields, page 38*.

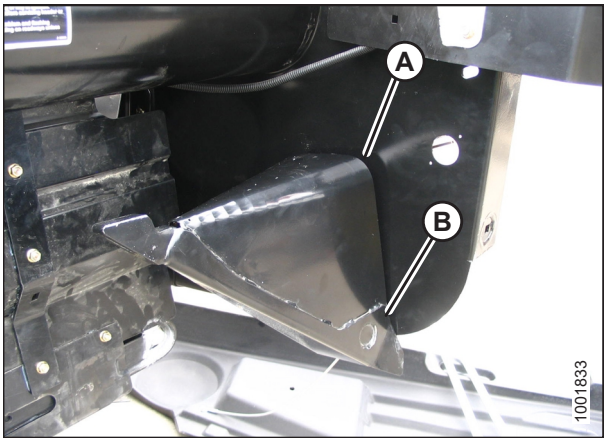

Figure 3.160: Stored Crop Divider

Removing Crop Dividers without Latch Option from Header

DANGER

To avoid bodily injury or death from unexpected start-up or fall of raised machine, always stop engine, remove key, and engage safety props before going under header for any reason.

1. Lower the reel fully. For instructions, refer to your combine operator's manual.
2. Raise the header. For instructions, refer to your combine operator's manual.
3. Shut down the engine, and remove the key from the ignition.
4. Engage the safety props. For instructions, refer to your combine operator's manual.
5. Open the endshield. For instructions, refer to *Opening Endshields, page 37*.
6. Remove bolt (A), lock washer, and flat washer.
7. Lower crop divider (B) and then lift to remove from endsheet.
8. Close the endshield. For instructions, refer to *Closing Endshields, page 38*.

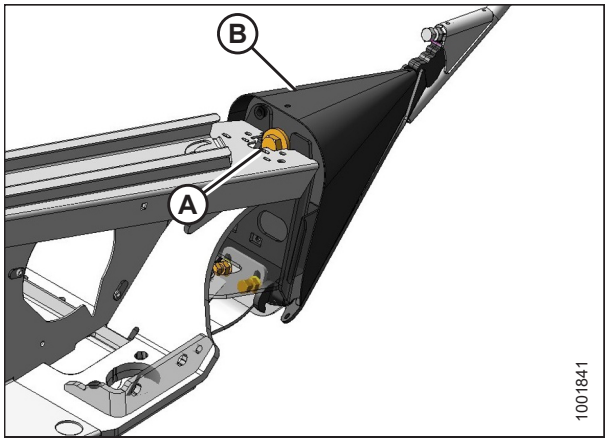

Figure 3.161: Crop Divider

Installing Crop Dividers with Latch Option onto Header

DANGER

To avoid bodily injury or death from unexpected start-up or fall of raised machine, always stop engine, remove key, and engage safety props before going under header for any reason.

1. Lower the reel fully. For instructions, refer to your combine operator's manual.
2. Raise the header. For instructions, refer to your combine operator's manual.
3. Shut down the engine, and remove the key from the ignition.
4. Engage the safety props. For instructions, refer to your combine operator's manual.
5. Open the endshield. For instructions, refer to *Opening Endshields, page 37*.
6. Remove crop divider from storage location by lifting crop divider to disengage lugs (A) at lower end and then lowering it slightly to disengage pin (B) from endsheet.

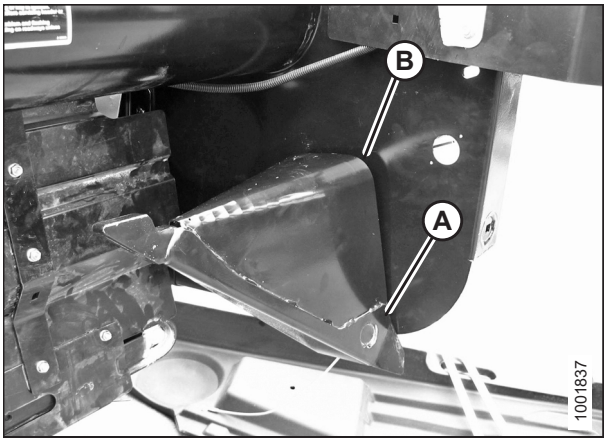

Figure 3.162: Stored Crop Divider

7. Position crop divider as shown by inserting lugs (A) into holes in endsheet.
8. Lift forward end of crop divider until pin (B) at top of crop divider engages and closes latch (C).
9. Push safety lever (D) downwards to lock pin into latch (C).

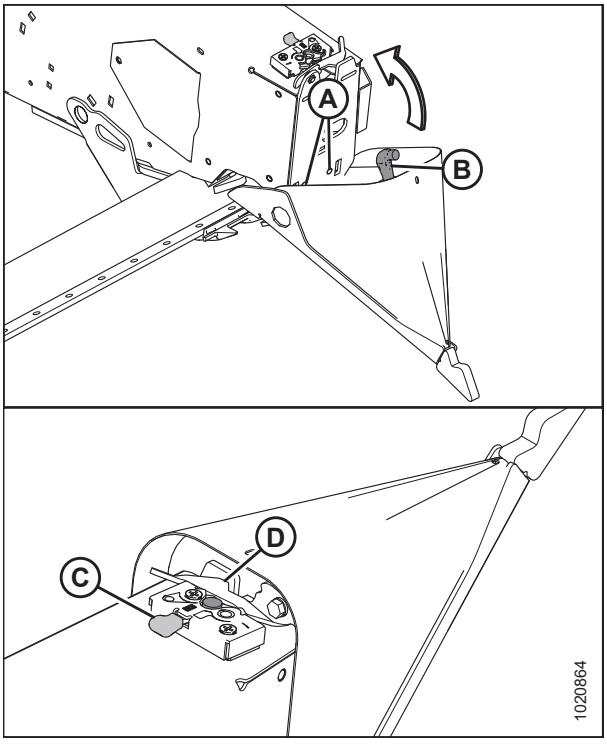

Figure 3.163: Crop Divider

10. Pull the tip of the crop divider to ensure there is no lateral movement. If necessary, adjust bolts (A) to tighten crop divider and eliminate lateral movement.
11. Close the endshield. For instructions, refer to *Closing Endshields, page 38*.

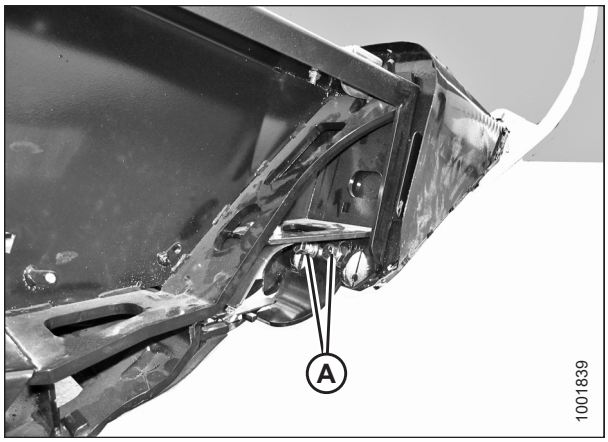

Figure 3.164: Crop Divider

Installing Crop Dividers without Latch Option onto Header

DANGER

To avoid bodily injury or death from unexpected start-up or fall of raised machine, always stop engine, remove key, and engage safety props before going under header for any reason.

1. Lower the reel fully. For instructions, refer to your combine operator's manual.
2. Raise the header. For instructions, refer to your combine operator's manual.
3. Shut down the engine, and remove the key from the ignition.
4. Engage the safety props. For instructions, refer to your combine operator's manual.
5. Open the endshield. For instructions, refer to *Opening Endshields, page 37*.
6. Remove crop divider from storage location by lifting crop divider to disengage lugs (A) at lower end and then lowering it slightly to disengage pin (B) from endsheet.

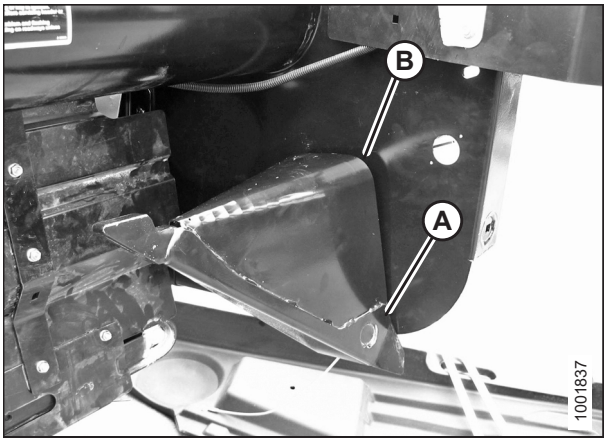

Figure 3.165: Stored Crop Divider

7. Position crop divider as shown by inserting lugs (A) into holes in endsheet.

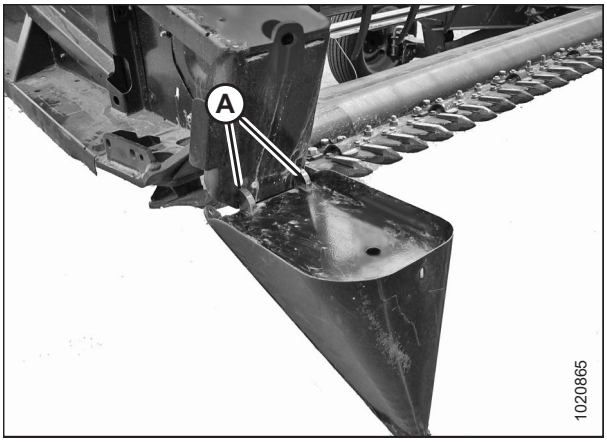

Figure 3.166: Crop Divider

8. Lift forward end of crop divider and install bolt (A) and special stepped washer (B) (step towards divider). Tighten bolt.
9. Pull the tip of the crop divider to ensure there is no lateral movement. If necessary, adjust bolts (C) to tighten crop divider and eliminate lateral movement.
10. Close the endshield. For instructions, refer to *Closing Endshields, page 38*.

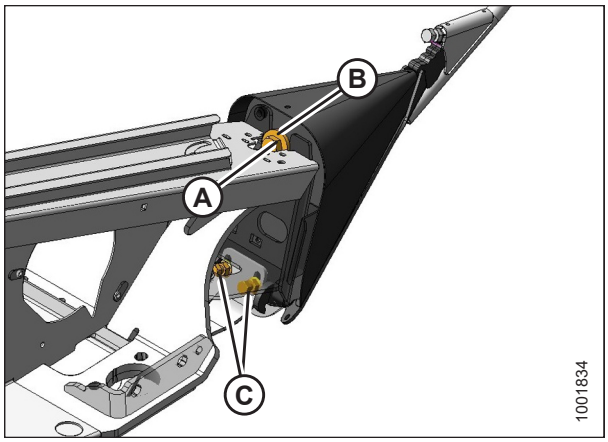

Figure 3.167: Crop Divider

3.8.13 Crop Divider Rods

Crop divider rods are used in conjunction with crop dividers. The removable crop divider rods are most useful when crop is bushy or down. In standing crops, using only crop dividers is recommended.

Table 3.19 Crop Divider Rods Recommended Use

With Divider Rods		Without Divider Rods
Alfalfa	Lodged cereal	Edible beans
Canola	Peas	Milo
Flax	Soybeans	Rice
Grass seed	Sudan grass	Soybeans
Lentils	Winter forage	Standing cereal

Removing Crop Divider Rods

1. Loosen bolt (A) and remove crop divider rod (B) from both sides of header.

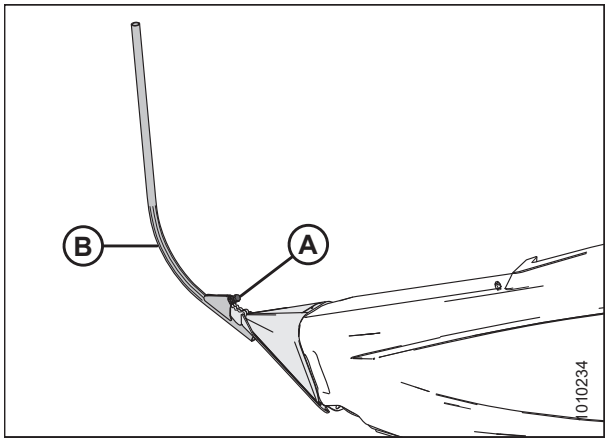

Figure 3.168: Crop Divider Rod

2. Store both crop divider rods (A) inboard on the right endsheet.

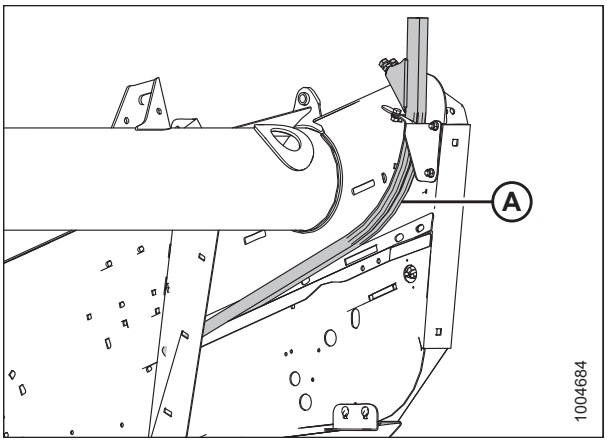

Figure 3.169: Right Endsheet

Installing Crop Divider Rods

1. Remove crop divider rods (A) from storage location on inboard of side endsheet.

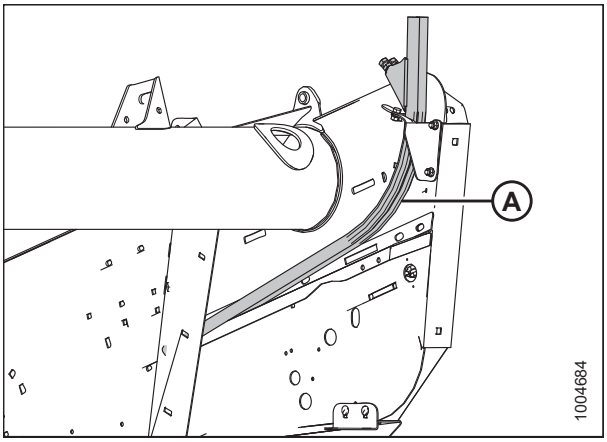

Figure 3.170: Right Endsheet

2. Position crop divider rod (B) on tip of crop divider as shown and tighten bolt (A).
3. Repeat procedure at opposite end of header.

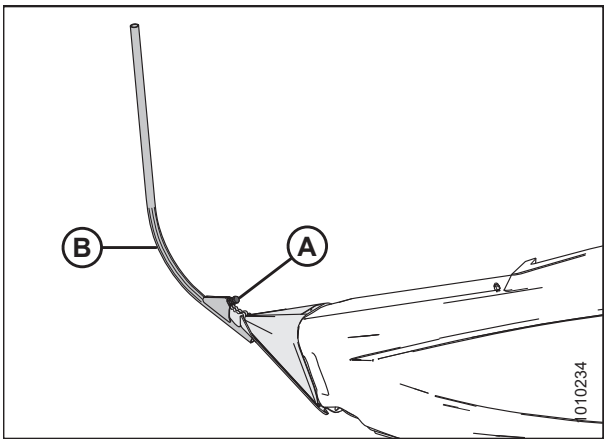

Figure 3.171: Divider Rod on Crop Divider

Rice Divider Rods

Optional rice divider rods provide improved performance in tall and tangled rice crops. The installation and removal procedures for these rods are the same as the installation and removal procedures for standard crop divider rods. For more information, refer to *6.5.10 Rice Divider Rods, page 640*.

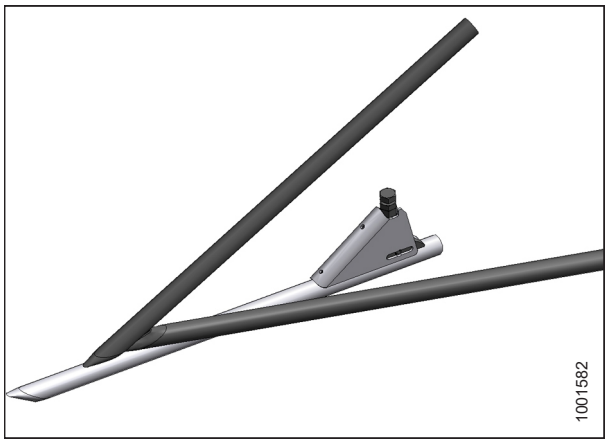

Figure 3.172: Divider Rod for Rice

3.8.14 Setting Auger Position

The auger position has two settings—floating and fixed. The factory setting is the floating position, and is recommended for most crop conditions.

DANGER

To avoid bodily injury or death from unexpected start-up or fall of raised machine, always stop engine, remove key, and engage safety props before going under header for any reason.

Auger float adjustment arms (A) are located at the bottom left and bottom right of the float module.

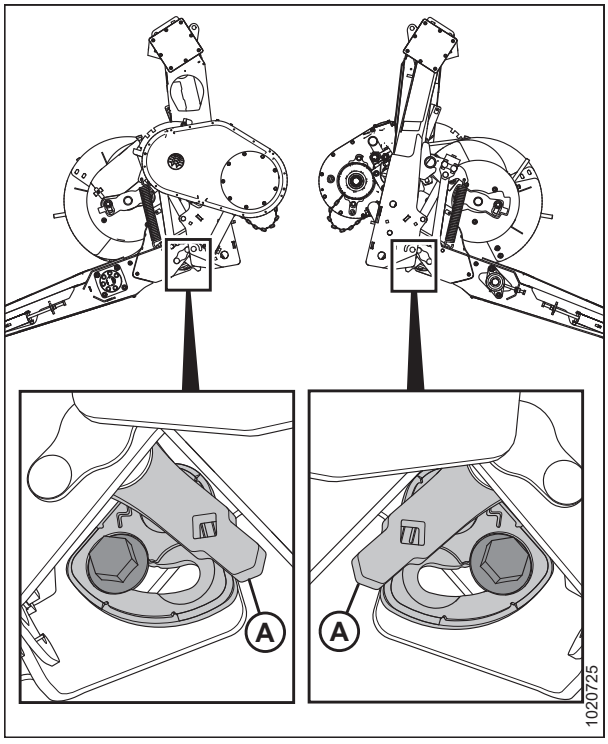

Figure 3.173: Auger Float Adjustment Arms

If bolt (A) is next to floating symbol (B), the auger is in the floating position. If bolt (A) is next to fixed symbol (C), the auger is in the fixed position.

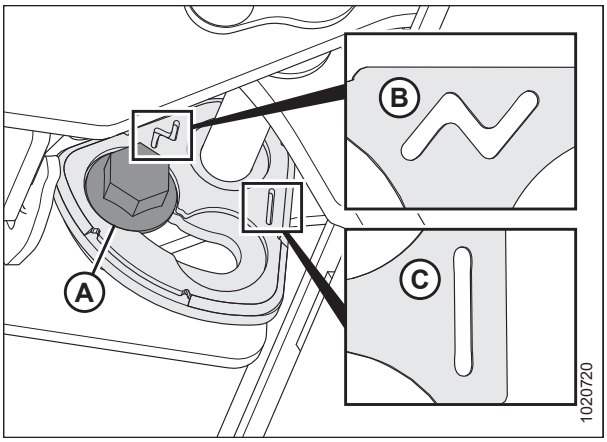

Figure 3.174: Auger Float Positions

CAUTION

Make sure left and right brackets are set to the same position; two bolts (A) must be in the same location to prevent damage to the machine during operation.

To set the auger position, follow these steps:

1. Extend center-link to the steepest header angle.
2. Raise header to full height, and engage safety props.
3. Shut down the engine, and remove the key from the ignition.
4. Using a 21 mm wrench, loosen bolt (A) until the bolt head is clear of bracket (B).

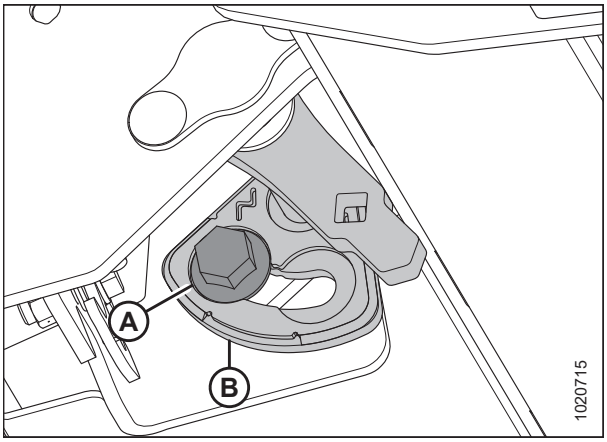

Figure 3.175: Left Auger Float Adjustment Arm

5. Using the same wrench, move arm (B) forward until bolt (A) is in the slot on bracket next to fixed symbol (C). The arm can also be moved using a breaker bar in square hole (D).

   NOTE:

   If changing the auger position from fixed to floating, move arm in opposite direction.

6. Tighten bolt (A) to 122 Nm (90 lbf·ft).

   IMPORTANT:

   Bolt (A) must be properly seated in recess on bracket before tightening bolt. If arm (B) can be moved after tightening bolt, then bolt (A) is not seated properly.

7. Repeat on opposite side.

   IMPORTANT:

   Bolt (A) on each side of the float module must be in the same position to prevent damage to the machine during operation.

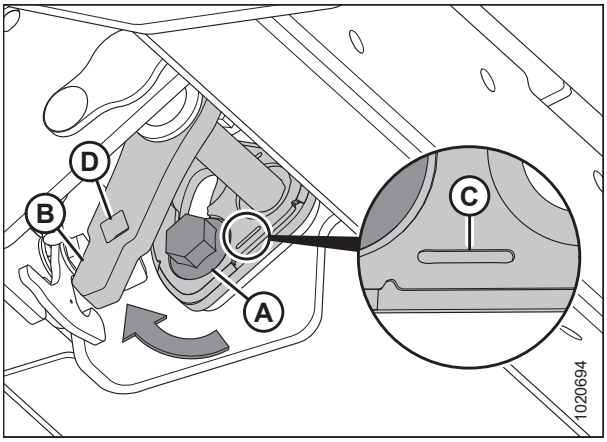

Figure 3.176: Left Auger Float Adjustment Arm

3.9 Auto Header Height Control

MacDon's auto header height control (AHHC) feature works in conjunction with the AHHC option available on certain combine models.

A sensor is installed in float indicator box (A) on the FM100 Float Module. This sensor sends a signal to the combine allowing it to maintain a consistent cutting height and an optimum float as the header follows ground contours. A lateral tilt two-sensor system is also available as an optional kit.

For more information, refer to *6 Options and Attachments, page 623*.

Figure 3.177: FM100 Float Module

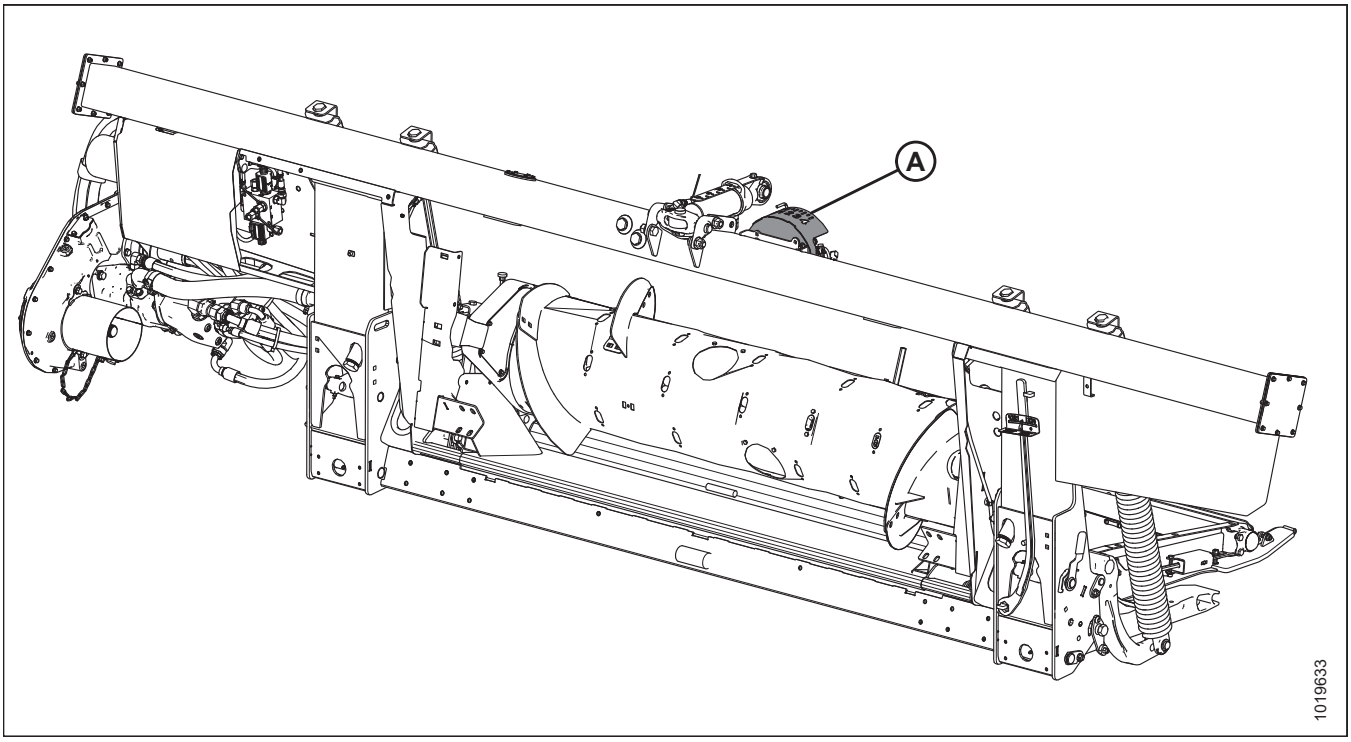

FM100 Float Modules are factory-equipped for AHHC; however, before using the AHHC feature, you must do the following:

1. Ensure that the AHHC sensor's output voltage range is appropriate for the combine. For more information, refer to *3.9.3 Sensor Output Voltage Range – Combine Requirements, page 151*.
2. Prepare the combine to use the AHHC feature (applies only to some combine models—refer to the following instructions for your combine).
3. Calibrate the AHHC system so that the combine can correctly interpret data from the height sensor on the float module (refer to the following instructions for your combine).

   NOTE:

   Once calibration is complete, you are ready to use the AHHC feature in the field. Individual combine settings can improve AHHC performance (refer to your combine instruction manual).

Refer to the following instructions for your specific combine model:

- *3.9.4 AGCO IDEAL™ Series Combines, page 163*
- *3.9.5 Case IH 5088/6088/7088 Combines, page 177*
- *3.9.7 Case IH 7010/8010, 120, 230, 240, and 250 Series Combines, page 189*
- *3.9.8 Challenger and Massey Ferguson 6 and 7 Series Combines, page 207*
- *3.9.9 CLAAS 500 Series Combines, page 215*
- *3.9.10 CLAAS 600 and 700 Series Combines, page 225*
- *3.9.11 CLAAS 8000/7000 Series Combines, page 236*
- *3.9.12 Gleaner R65/R66/R75/R76 and S Series Combines, page 248*
- *3.9.13 Gleaner S9 Series Combines, page 260*
- *3.9.14 John Deere 60 Series Combines, page 275*
- *3.9.15 John Deere 70 Series Combines, page 282*
- *3.9.16 John Deere S and T Series Combines, page 289*
- *3.9.18 New Holland Combines – CR/CX Series – 2014 and Prior, page 320*
- *3.9.19 New Holland Combines – CR Series – 2015 and Later, page 332*

3.9.1 Sensor Operation

The position sensors supplied with the auto header height control (AHHC) system are hall-effect sensors. Normal operating signal voltages for the sensors fall between 10% (0.5 VDC) and 90% (4.5 VDC). An increase in sensor voltage correlates to a decrease in ground pressure, or if you are cutting off the ground on gauge wheels, an increase in the header cut height.

Sensor errors result in a 0 V signal, indicating a faulty sensor, incorrect supply voltage, or a damaged wiring harness.

3.9.2 Troubleshooting Auto Header Height / Float Indicator

Use the following tables to determine the recommended repair procedure:

Problem	Solution	Refer to
Symptom: Float indicator not moving		
Cable (A) is frayed	Replace cable.	See your MacDon Dealer
Excessive material built up inside float indicator / auto header height frame	Clean out material.	—
Cable (A) fell off of pulleys (B)	Check pulleys and replace them if necessary.	—
Rubber sheath (C) came off of cable (A) and gets caught on the pulley	Install cable ties around the rubber sheath and cable to secure it.	—
Spring (D) seized from corrosion	Replace spring.	—
Cotter pin (E) breaks and pin spins	Check for seized pin in bore, clean if necessary, and then replace cotter pin.	—
Voltage range too low or high	Adjust voltage range.	*3.9.3 Sensor Output Voltage Range – Combine Requirements, page 151*
Faulty sensor (F)	Replace sensor.	See your MacDon Dealer

Figure 3.178: Float Indicator

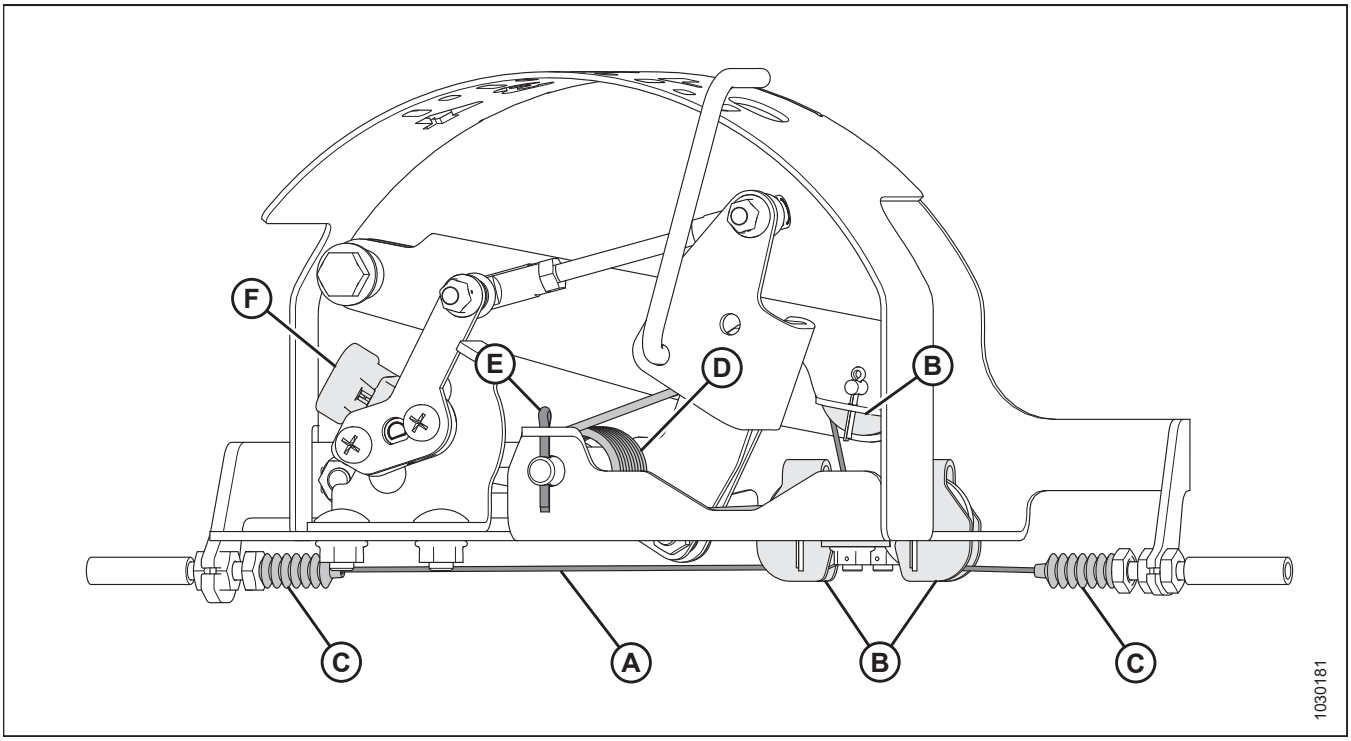

3.9.3 Sensor Output Voltage Range – Combine Requirements

The auto header height control (AHHC) sensor output must be within a specific voltage range for each combine, or the AHHC feature will not work properly.

Table 3.20 Combine Voltage Limits

Combine	Low Voltage Limit	High Voltage Limit	Range (Difference between High and Low Limits)
AGCO IDEAL™ Series	0.5 V	4.5 V	2.5 V
Case IH 5088/6088/7088, 5130/6130/7130, 7010/8010, 7120/8120/9120, 7230/8230/9230, and 7240/8240/9240	0.5 V	4.5 V	2.5 V
Case IH 2588/2577	2.8 V	7.2 V	4.0 V
Challenger, Gleaner A, and Massey Ferguson	0.5 V	4.5 V	2.5 V
CLAAS 500/600/700 Series	0.5 V	4.5 V	2.5 V
Gleaner R and S Series	0.5 V	4.5 V	2.5 V
John Deere 60, 70, S, and T Series	0.5 V	4.5 V	2.5 V
New Holland CR/CX - 5 V system	0.7 V	4.3 V	2.5 V
New Holland CR/CX - 10 V system	2.8 V	7.2 V	4.1–4.4 V

NOTE:

Some combine models do not support checking sensor output voltage from the cab (early Case 23/2588 series, CLAAS 500/600/700 Series). For these models, check output voltage manually. Refer to *Manually Checking Voltage Range – One-Sensor System, page 153* or *Manually Checking Voltage Range – Two-Sensor System, page 155*.

10 Volt Adapter (MD #B6421) – New Holland Combines Only

New Holland combines with a 10 V system require the 10 V adapter (A) (MD #B6421) for proper calibration of the auto header height control (AHHC) feature.

If a 10 V New Holland combine does not have the adapter installed, the AHHC output will always read 0 V, regardless of sensor position.

NOTE:

A 10 V adapter is not available for the optional two-sensor system.

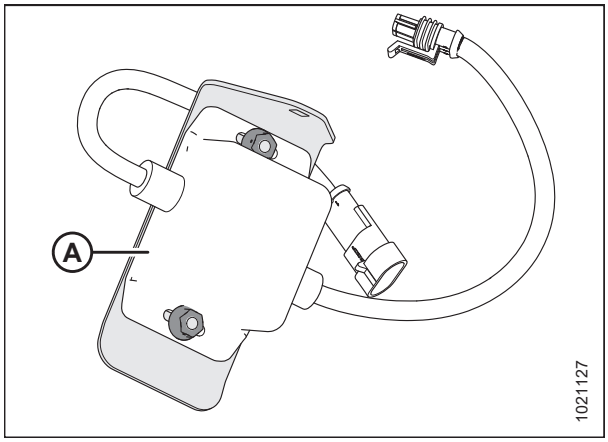

Figure 3.179: 10 V Adapter (MD #B6421)

Use a voltmeter to measure the voltage between Pin 1 (power) and Pin 2 (ground) wires at the AHHC sensor (A). This will determine whether the combine has a 5 V system or a 10 V system.

NOTE:

The combine key must be in the ON position, but the engine does not need to be running.

The three possible voltage readings are as follows:

- 0 V – combine key is in OFF position, or there is a faulty harness/bad connection
- 5 V – standard combine reading
- 10 V – 10 V combine reading; adapter (MD #B6421) is required

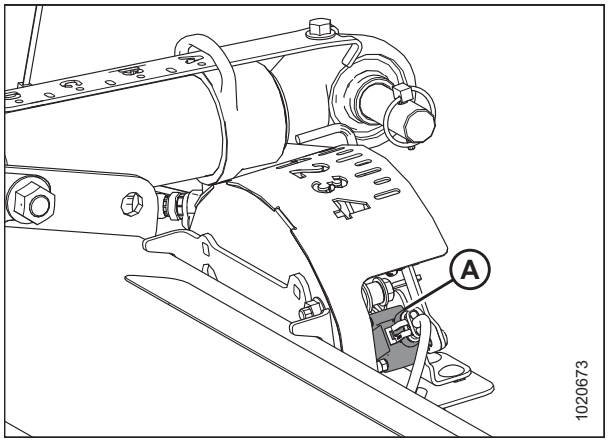

Figure 3.180: Float Indicator Box

Manually Checking Voltage Range – One-Sensor System

The one-sensor system is standard for the FM100 Float Module. If equipped with the optional two-sensor system, refer to *Manually Checking Voltage Range – Two-Sensor System, page 155*.

The output voltage range of the auto header height control (AHHC) sensors in some combines can be checked from the cab. For instructions, refer to your combine operator's manual or the AHHC instructions later in this document.

To manually check the sensor's output voltage range, follow these steps:

1. Extend guard angle fully; the header angle indicator should be at **D**.
2. Position the header 150 mm (6 in.) above the ground, and unlock the float.
3. Check that float lock linkage is on down stops (washer [A] cannot be moved) at both locations.

   NOTE:

   If the header is **NOT** on down stops during the next two steps, the voltage may go out of range during operation causing a malfunction of the AHHC system. If the header is not on down stops, refer to *3.10 Leveling the Header, page 348* for instructions.

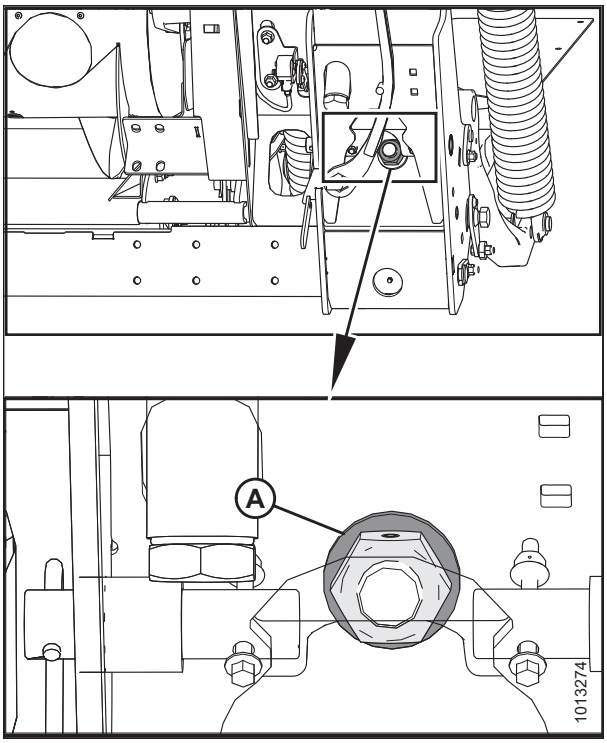

Figure 3.181: Down Stop Washer

4. Locate linkage assembly (A). Verify that dimension (B) is set to 55 mm (2 3/16 in.). If it is not, adjust linkage (A).

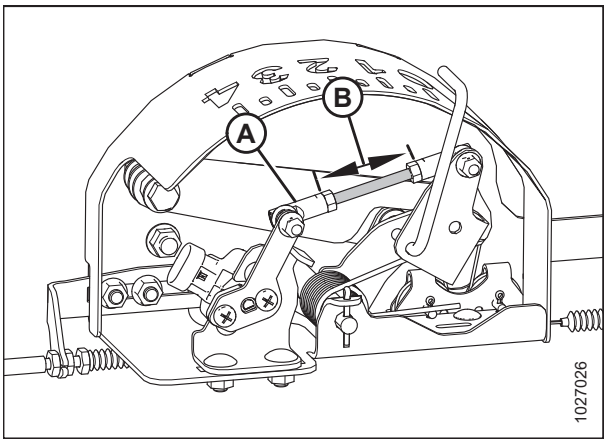

Figure 3.182: Float Indicator Box

5. Adjust cable take-up bracket (B) (if necessary) until float indicator pointer (A) is on **0**.

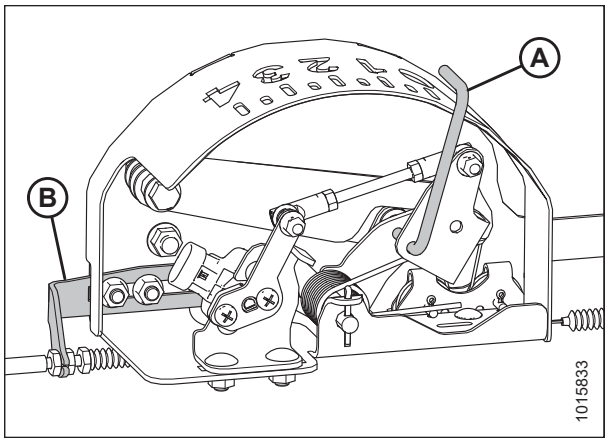

Figure 3.183: Float Indicator Box

6. Use a voltmeter (A) to measure the voltage between the ground (Pin 2) and signal (Pin 3) wires at the AHHC sensor in the float indicator box. Ensure it is at the high voltage limit for the combine. For voltage limit chart, refer to Table *3.20, page 151*.

   NOTE:

   The wiring harness connector must be attached to the sensor. Do **NOT** disconnect it.

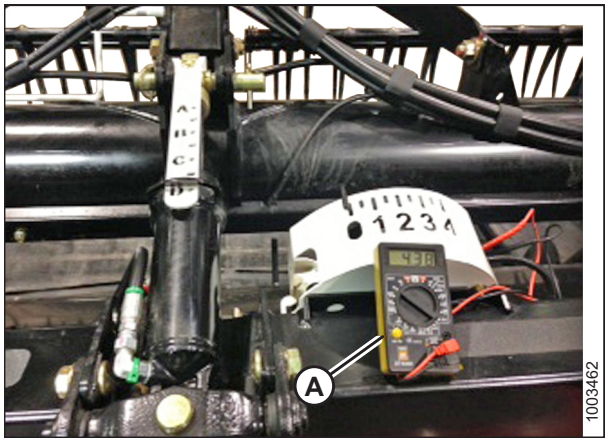

Figure 3.184: Measuring Voltage at Float Indicator Box

7. Fully lower the combine feeder house, and float the header up off the down stops (float indicator should be at **4**, and the float module should be fully separated from the header).

   NOTE:

   You may need to hold the HEADER DOWN switch for a few seconds to ensure the feeder house is fully lowered.

8. Use a voltmeter (A) to measure the voltage between the ground and signal wires at the AHHC sensor in the float indicator box. It should be at the low voltage limit for the combine. For voltage limit chart, refer to Table *3.20, page 151*.

   NOTE:

   The wiring harness connector must be attached to the sensor. Do **NOT** disconnect it.

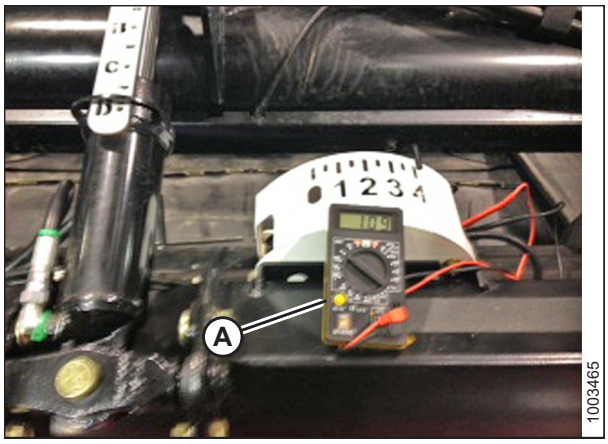

Figure 3.185: Measuring Voltage at Float Indicator Box

9. If the sensor voltage is not within the low and high limits, or if the range between the low and high limits is insufficient, adjust the voltage limits. Refer to *Adjusting Voltage Limits – One-Sensor System, page 159*.

Manually Checking Voltage Range – Two-Sensor System

FM100 Float Modules equipped with the optional two-sensor system have a left and right sensor located on the back frame of the float module.

WARNING

To avoid injury or death from unexpected start-up of machine, always stop the engine and remove the key from the ignition before leaving the operator's seat for any reason.

Figure 3.186: Sensor Orientation

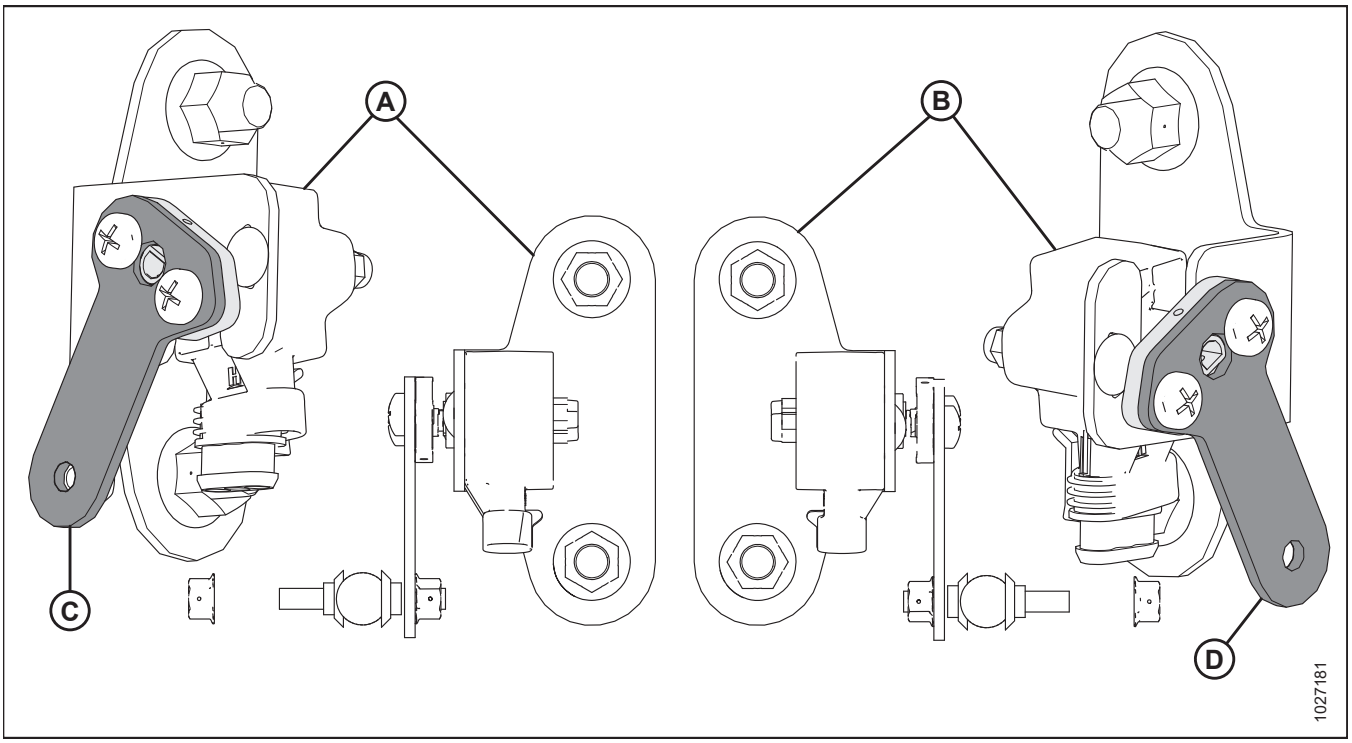

1. Before adjusting the sensors, verify the sensor arms are properly installed on the sensors.
   - Left Sensor (A): The **point** on the arm of the sensor should face **away** from the header. The point on the float sensor arm (C) should be installed in the same direction, facing away from the header.
   - Right Sensor (B): The **point** on the arm of the sensor should face **away** from the header. The point on the float sensor arm (D) should be installed in the same direction, facing away from the header.

To manually check the sensor's output voltage range, follow these steps:

2. Extend guard angle fully; the header angle indicator should be at **D**.
3. Position the header 150 mm (6 in.) above the ground, and unlock the float.

4. Check that float lock linkage is on down stops (washer [A] cannot be moved) at both locations.

   NOTE:

   If the header is not on down stops during the next two steps, the voltage may go out of range during operation causing a malfunction of the AHHC system. If the header is not on down stops, refer to *3.10 Leveling the Header, page 348* for instructions.

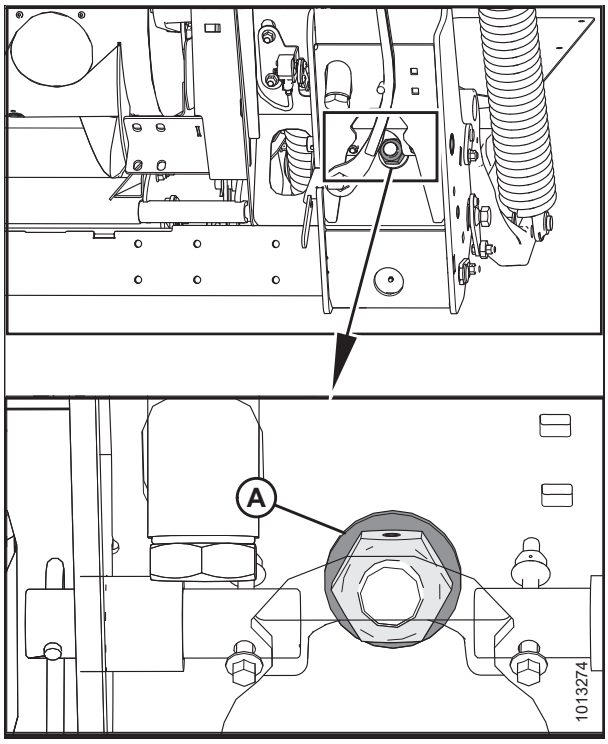

Figure 3.187: Down Stop Washer

5. Locate linkage assembly (A). Verify that dimension (B) is set to 55 mm (2 3/16 in.). If it is not, adjust linkage (A).

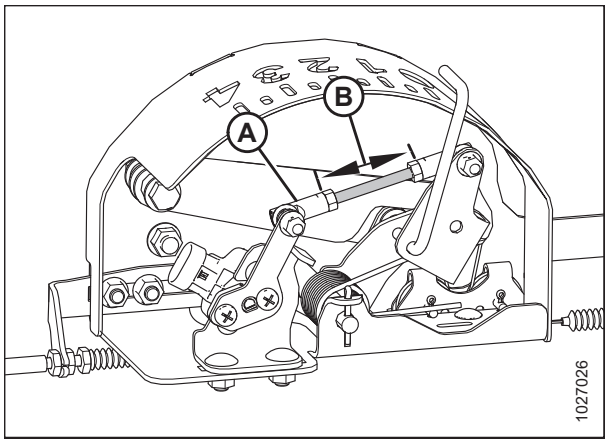

Figure 3.188: Float Indicator Box

6. Adjust cable take-up bracket (B) (if necessary) until pointer (A) on the float indicator is on **0**.

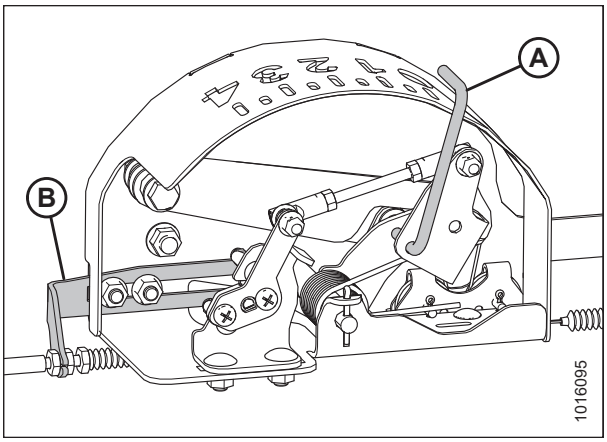

Figure 3.189: Float Indicator Box

7. Use a voltmeter to measure the voltage between the ground (Pin 2) and signal (Pin 3) wires of AHHC sensor (A) at the back of the float module side frame. Ensure it is at the high voltage limit for the combine. For voltage limit chart, refer to Table *3.20, page 151*.

   NOTE:

   The wiring harness connector must be attached to the sensor. Do **NOT** disconnect it.

8. Repeat at the opposite side.

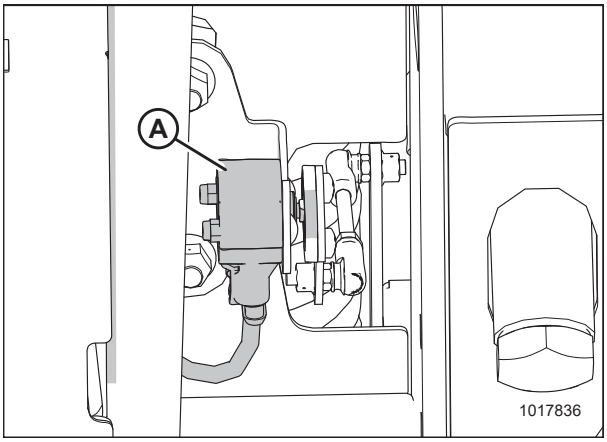

Figure 3.190: Optional Two-Sensor Kit – Right Sensor

9. Fully lower the combine feeder house, and float the header up off the down stops (float indicator [A] should be at **4**, and the float module should be fully separated from the header).

   NOTE:

   You may need to hold the HEADER DOWN switch for a few seconds to ensure the feeder house is fully lowered.

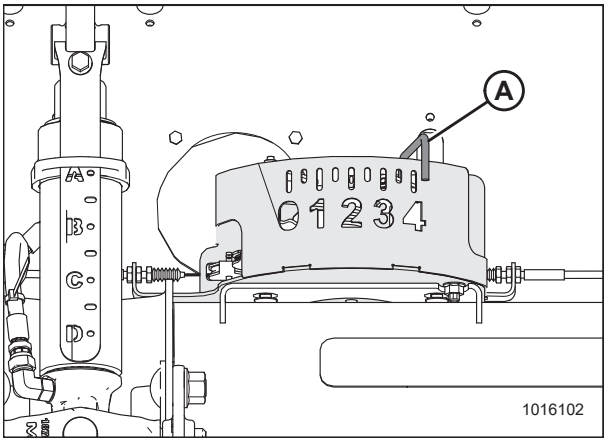

Figure 3.191: Float Indicator Box

10. Using a voltmeter, measure the voltage between the ground (Pin 2) and signal (Pin 3) wires of AHHC sensor (A) at the back of the side frame. Ensure it is at the low voltage limit for the combine. For voltage limit chart, refer to Table *3.20, page 151*.

    NOTE:

    The wiring harness connector must be attached to the sensor. Do **NOT** disconnect it.

11. If the sensor voltage is not within the low and high limits, or if the range between the low and high limits is insufficient, adjust the voltage limits. For instructions, refer to *Adjusting Voltage Limits – Two-Sensor System, page 160*.

12. Repeat at the opposite side.

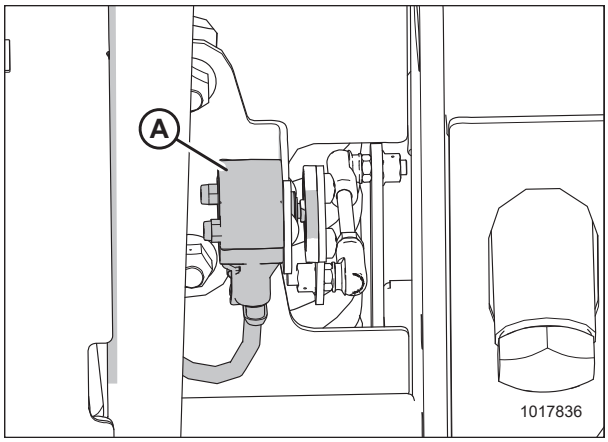

Figure 3.192: Optional Two-Sensor Kit – Right Sensor

Adjusting Voltage Limits – One-Sensor System

Follow this procedure if you have checked the voltage range (either manually or from the cab) and found that the sensor voltage is not within the low and high limits, or that the range between the low and high limits is insufficient.

WARNING

To avoid injury or death from unexpected start-up of machine, always stop the engine and remove the key from the ignition before leaving the operator's seat for any reason.

1. Follow these steps to adjust the high voltage limit:
   a. Extend guard angle fully; the header angle indicator should be at **D**.
   b. Position header 152–254 mm (6–10 in.) above the ground; the float indicator should be at **0**.
   c. Check the high voltage limit using the combine display or a voltmeter. For voltage limit chart, refer to Table *3.20, page 151*.
   d. Loosen sensor-mounting nuts (A).
   e. Slide sensor support (B) to the right to increase high voltage limit or to the left to decrease it.
   f. Tighten sensor-mounting nuts (A).
2. Follow these steps to adjust the low voltage limit:
   a. Extend guard angle fully; the header angle indicator should be at **D**.
   b. Fully lower header on the ground; the float indicator should be at **4**.
   c. Check the low voltage limit using the combine display or voltmeter. For voltage limit chart, refer to Table *3.20, page 151*.
   d. Loosen sensor-mounting nuts (A).
   e. Rotate sensor (B) clockwise to increase low voltage limit or counterclockwise to decrease it.
   f. Tighten sensor-mounting nuts (A).
3. After making adjustments, recheck both the upper and lower voltage limits to make sure they are within the required range according to Table *3.20, page 151*.

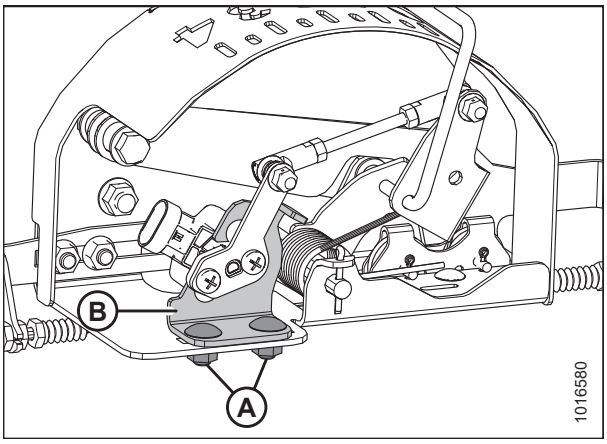

Figure 3.193: AHHC Sensor Assembly

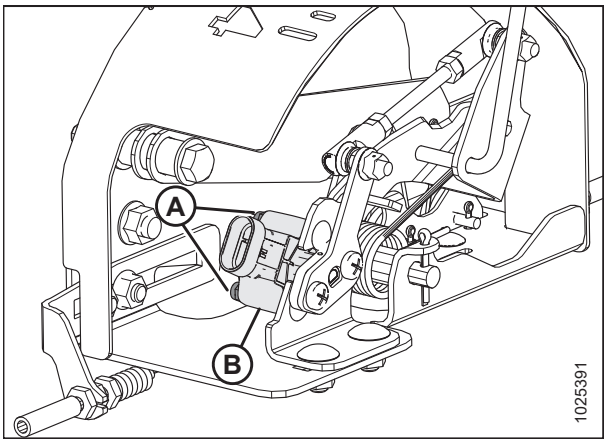

Figure 3.194: AHHC Sensor Assembly

Adjusting Voltage Limits – Two-Sensor System

WARNING

To avoid injury or death from unexpected start-up of machine, always stop the engine and remove the key from the ignition before leaving the operator's seat for any reason.

Figure 3.195: Sensor Orientation

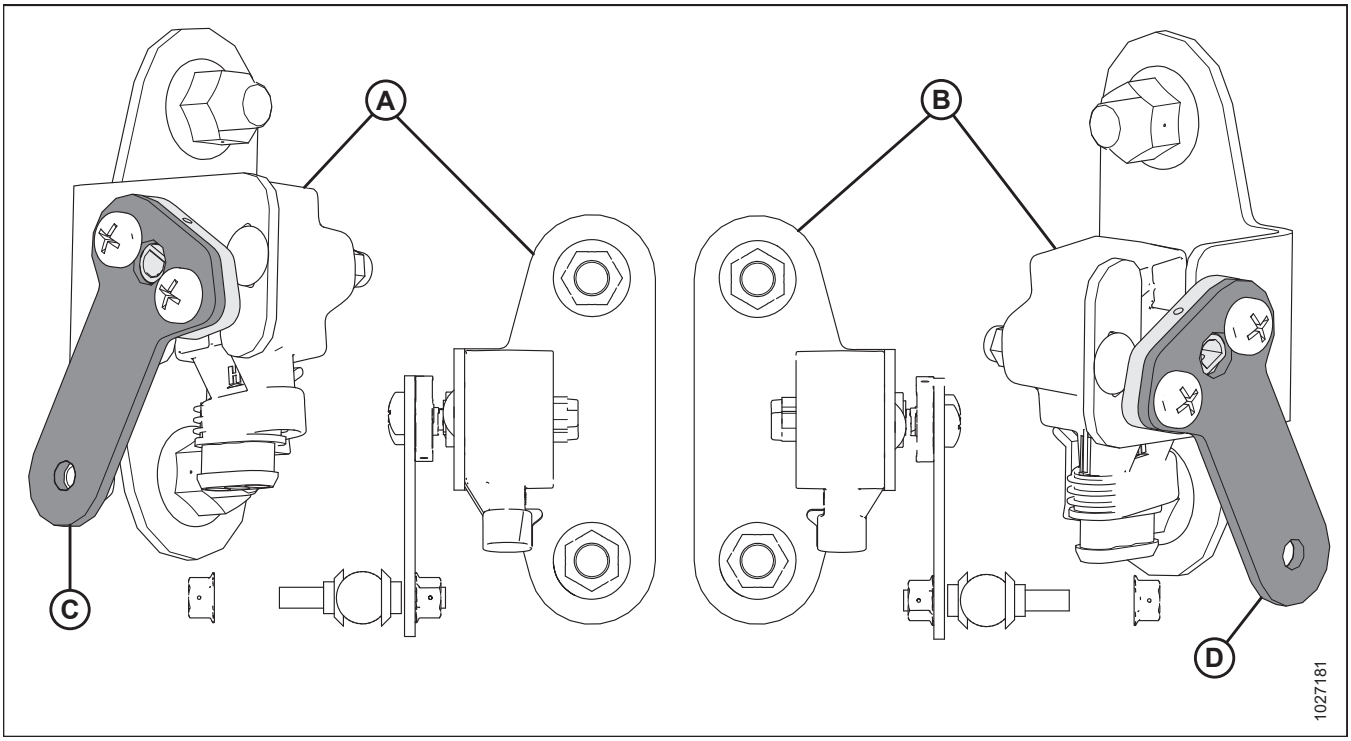

1. Before adjusting the sensors, verify the sensor arms are properly installed on the sensors.
   - Left Sensor (A): The **point** on the arm of the sensor should face **away** from the header. The point on the float sensor arm (C) should be installed in the same direction, facing away from the header.
   - Right Sensor (B): The **point** on the arm of the sensor should face **away** from the header. The point on the float sensor arm (D) should be installed in the same direction, facing away from the header.

Follow these steps to adjust the left sensor voltage:

2. Extend guard angle fully; the header angle indicator should be at **D**.
3. Position header 150–254 mm (6–10 in.) above the ground; the float indicator should be at **0**.
4. Loosen sensor-mounting nuts (A).
5. Check that the left sensor is at the correct high voltage limit.
6. Rotate sensor (B) counterclockwise to lower the voltage. Rotate sensor clockwise to raise the voltage.
7. Tighten sensor-mounting nuts (A).

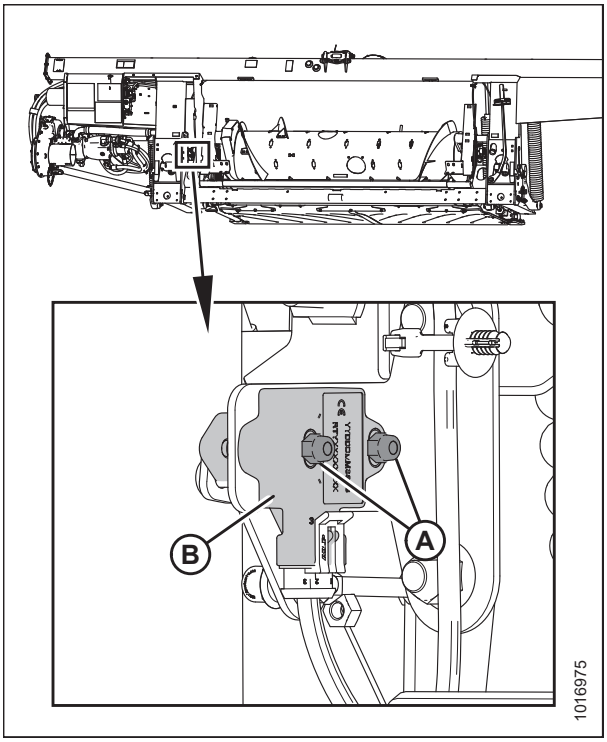

Figure 3.196: Optional Two-Sensor Kit – Left Sensor

Follow these steps to adjust the right sensor voltage:

8. Extend guard angle fully; the header angle indicator should be at **D**.
9. Position header 150–254 mm (6–10 in.) above the ground; the float indicator should be at **0**.
10. Loosen sensor mounting nuts (A).
11. Rotate sensor (B) clockwise to lower the voltage. Rotate sensor counterclockwise to raise the voltage.
12. Check that the right sensor is at the correct high voltage limit.
13. Tighten sensor mounting nuts (A).

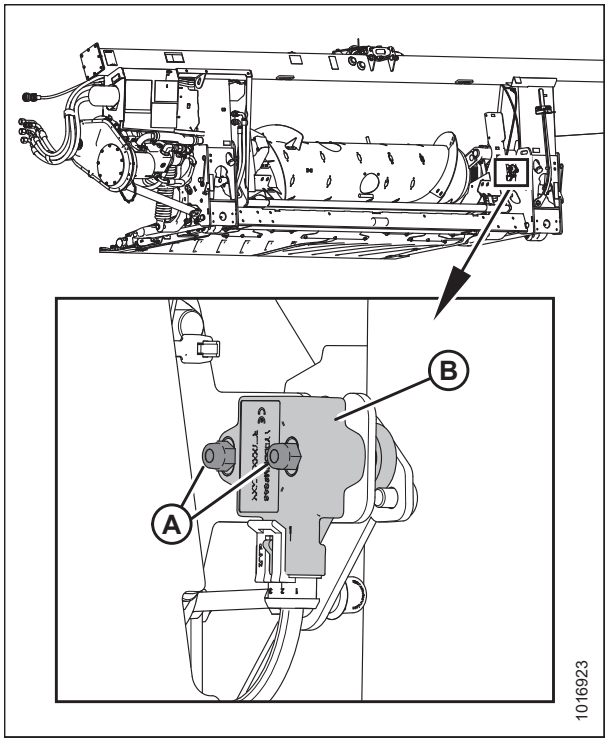

Figure 3.197: Optional Two-Sensor Kit – Right Sensor

14. Fully lower the header; float indicator (A) should be at **4**.
15. Check that both sensors are at the correct low voltage limit.

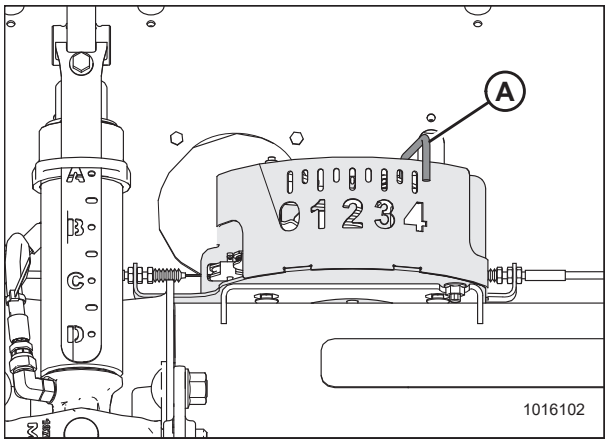

Figure 3.198: Float Indicator Box

3.9.4 AGCO IDEAL™ Series Combines

Setting up the Header – AGCO IDEAL™ Series

NOTE:

Up-to-date images of the AGCO IDEAL™ Series combine display were not available at time of publishing. For instructions, refer to the combine operator's manual for updates.

AGCO Tyton terminal (A) is used to set up and manage a MacDon header on an IDEAL™ combine. Use the touch screen display to select the desired item on the screen.

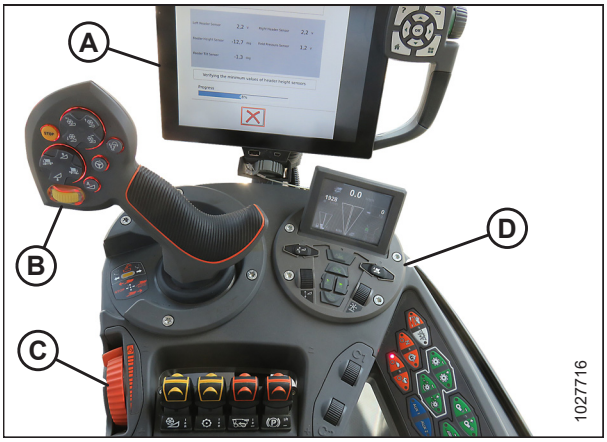

Figure 3.199: AGCO IDEAL™ Operator Station

A - Tyton Terminal **B - Control Handle**
C - Throttle **D - Header Control Cluster**

1. On the top right of the home screen, touch COMBINE icon (A). The COMBINE MAIN MENU opens.

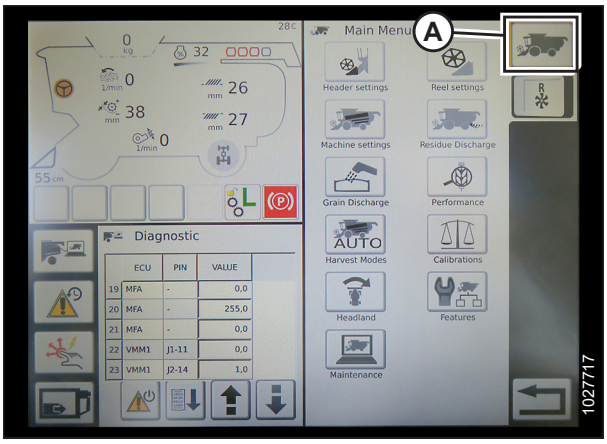

Figure 3.200: Combine Icon on Home Page

2. On the COMBINE MAIN MENU, touch HEADER SETTINGS (A). The HEADER SETTINGS page opens.

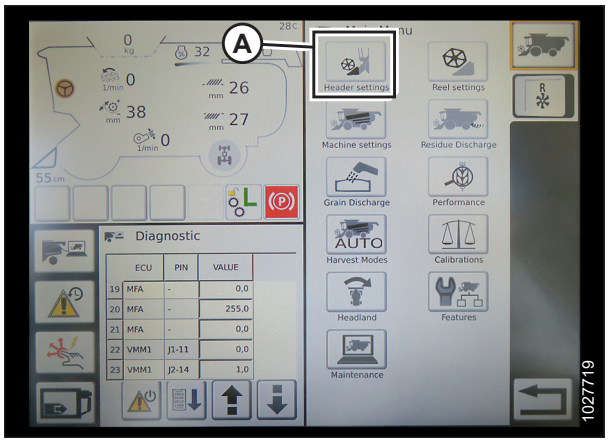

Figure 3.201: Header Settings in Combine Main Menu

3. Touch HEADER CONFIGURATION field (A). A dialog box showing predefined headers opens.
   - If your MacDon header is already set up, it appears on the header list. Touch the MacDon header title (B) to highlight the selection in blue, and then touch green check mark (E) to continue.
   - If only default header (D) is shown, touch ABC button (C), and use the on-screen keyboard to enter the MacDon header information. When complete, select one of the following options to return to the HEADER SETTINGS page:
     - Green check mark (E) saves the settings
     - Garbage can icon (F) deletes the highlighted header from the list
     - Red X (G) cancels the change(s)

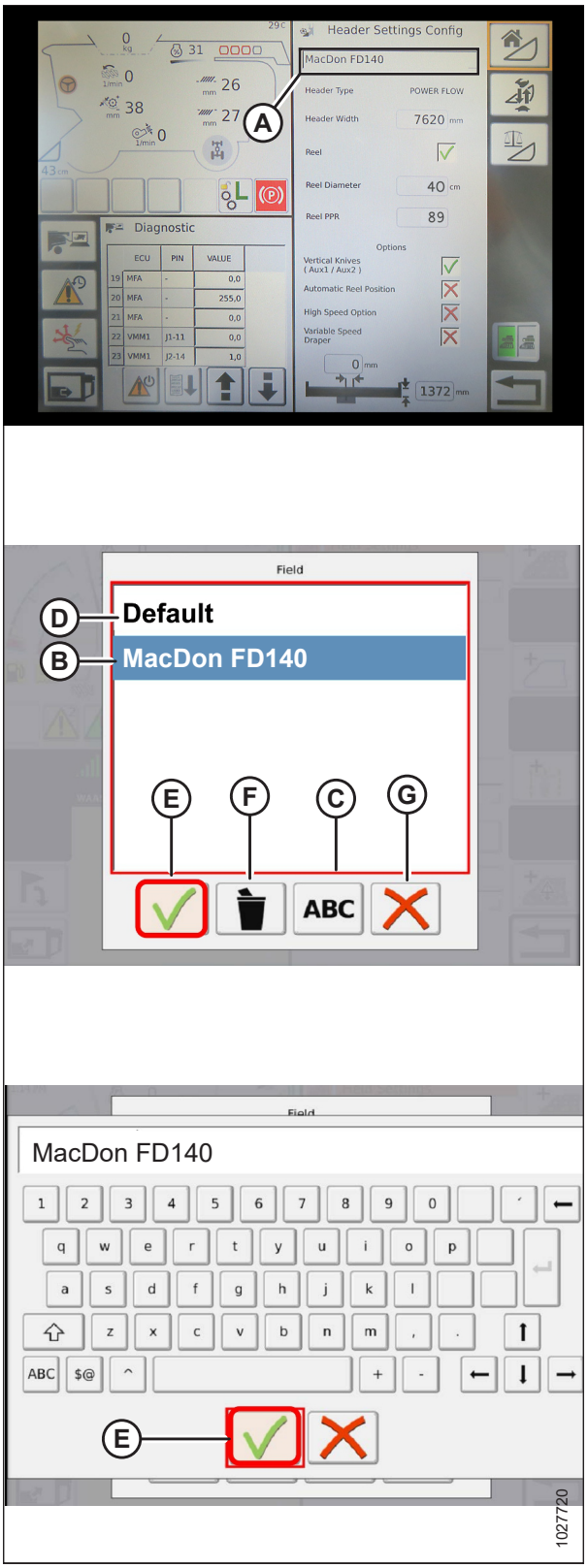

Figure 3.202: Header Configuration Menu on Header Settings Page

4. To specify the type of header installed on the machine, touch HEADER TYPE field (A).

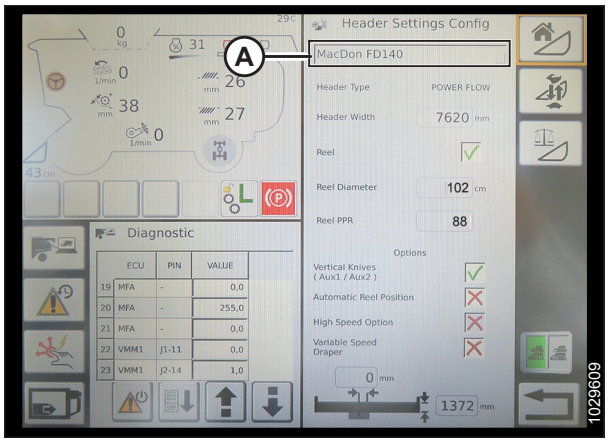

Figure 3.203: Header Settings

5. A list of predefined header types appears.
   - For MacDon D1 Series Draper and FD1 Series FlexDraper® headers, touch POWER FLOW (A)
   - Touch green check mark (B) to save the selection and continue

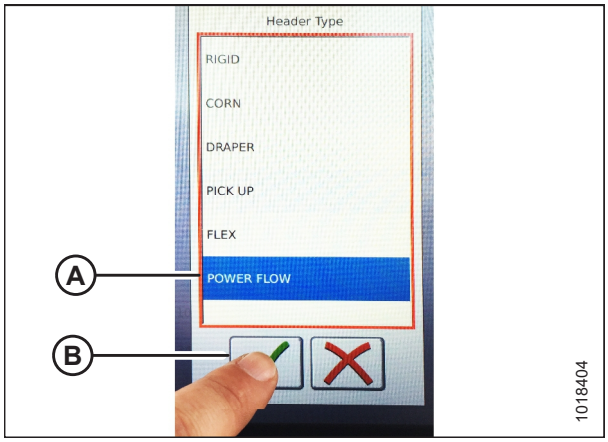

Figure 3.204: Header Type

6. Make sure that REEL check box (A) is checked.

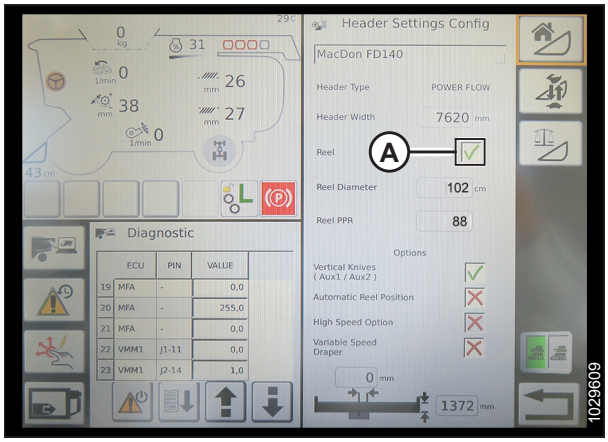

Figure 3.205: Header Settings

7. Touch REEL DIAMETER field (A) and a numeric keypad displays. Enter **102** for a MacDon reel.
8. Touch REEL PPR (Pulses Per Revolution) field (B) and enter **88** as the value for your MacDon header.

   NOTE:

   PPR is determined by the number of teeth on the reel speed sprocket.

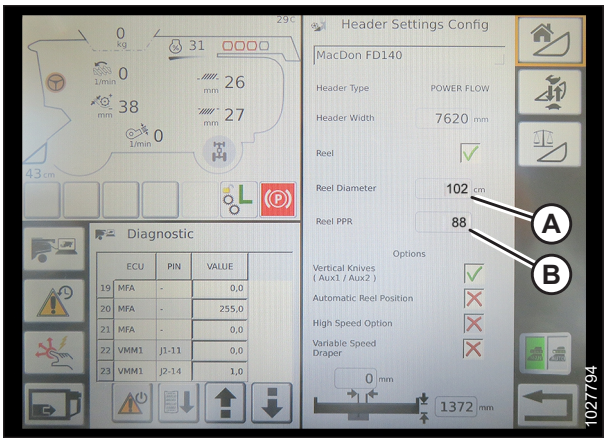

Figure 3.206: Header Settings

9. Touch green check mark (B) at the bottom of numeric keypad (A) when complete, or the red X to cancel.

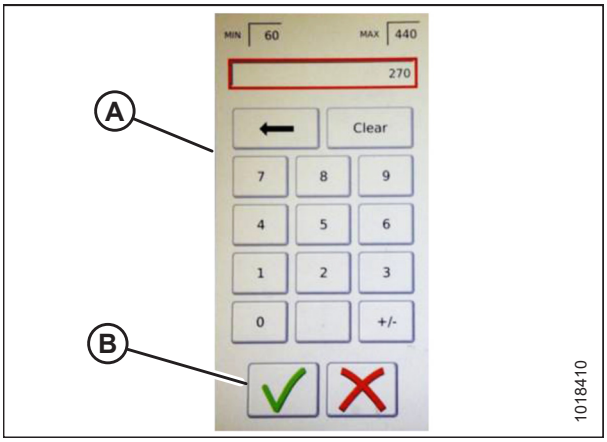

Figure 3.207: Numeric Keypad

10. When complete, touch green check mark (A) at the bottom of the HEADER SETTINGS page.

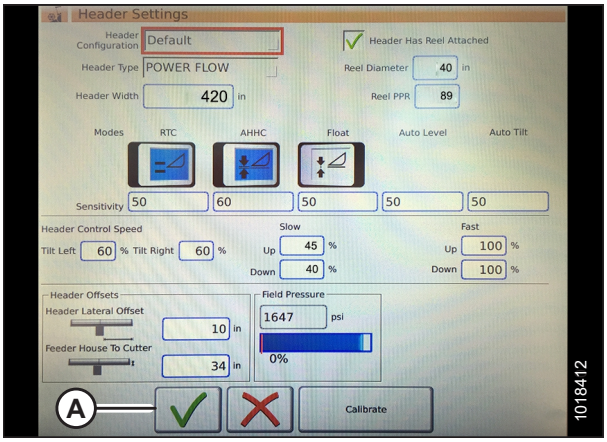

Figure 3.208: Header Settings Page

Setting Minimum Reel Speed and Calibrating Reel – AGCO IDEAL™ Series

WARNING

Clear the area of other persons, pets etc. Keep children away from machinery. Walk around the machine to be sure no one is under, on, or close to it.

NOTE:

Up-to-date images of the IDEAL™ combine display were not available at time of publishing. For instructions, refer to the combine operator's manual for updates.

1. From the COMBINE MAIN MENU, touch REEL SETTINGS (A) to open the REEL SETTINGS page.

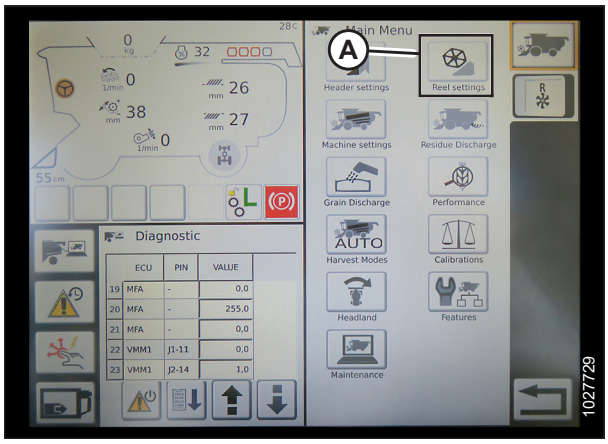

Figure 3.209: Reel Settings on Combine Main Menu

2. To set minimum reel speed, touch SPEED MINIMUM FIELD (B). The on-screen keyboard displays. Enter the desired value. Touch the green check mark to accept the new value, or the red X to cancel. The reel speed is shown in miles per hour (mph) and rotations per minute (rpm).

   NOTE:

   At the bottom of the REEL SETTINGS page, the reel diameter and reel pulses per revolution (PPR) are displayed. These values have already been set in the HEADER SETTINGS page.

3. Reel speed is calibrated on the REEL SETTINGS page by touching CALIBRATE button (A) in the top right of the page.

   NOTE:

   The CALIBRATION WIZARD opens and displays a hazard warning.



Figure 3.210: Reel Settings Calibration

4. Make sure to meet all the conditions listed in the CALIBRATION WIZARD warning. Press the green check mark to accept and start reel calibration. Pressing the red X will cancel the calibration procedure.

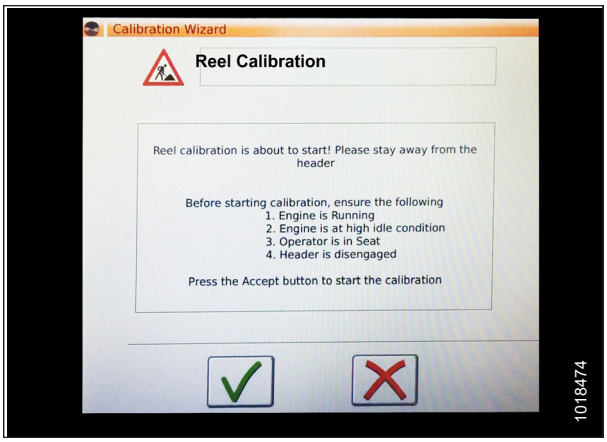

Figure 3.211: Calibration Wizard

5. A message appears in the CALIBRATION WIZARD stating that reel calibration has started. The reel will begin turning slowly and increase to high speed. A progress bar is provided. If necessary, touch the red X (not shown) to cancel. Otherwise, wait for the message that reel calibration has completed successfully. Touch the green check mark to save the calibrated settings.

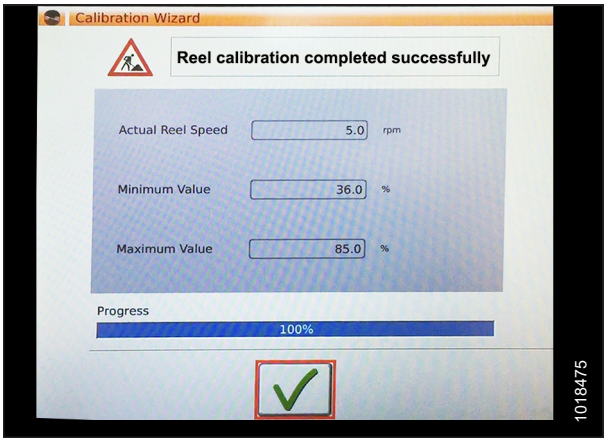

Figure 3.212: Calibration Progress

Setting up Automatic Header Controls – AGCO IDEAL™ Series

Automatic header functions are configured on the HEADER SETTINGS page.

NOTE:

Up-to-date images of the IDEAL™ Series combine display were not available at time of publishing. For instructions, refer to the combine operator's manual for updates.

1. **Automatic Control Functions:** There are toggle (OFF/ON) switches on the HEADER SETTINGS page for the automatic control functions. For MacDon headers, ensure the following two functions are enabled as shown:

   - RTC (return to cut) (A)
   - AHHC (automatic header height control) (B)

   All other switches are disabled (not highlighted).

2. **Sensitivity** setting (C) controls how responsive a control (RTC or AHHC) is to a given change in sensor feedback. The setting fields are located directly below the toggle switches. To enter a new sensitivity setting, touch the setting field below the specific toggle switch, and enter the new value in the on-screen keyboard.

   - Increase sensitivity if the combine does not change the feeder position quickly enough when in Auto Mode.
   - Decrease sensitivity if the combine hunts for a position in Auto Mode.

   NOTE:

   Recommended sensitivity starting points for MacDon headers are:

   - **50** for RTC (A)
   - **60** for AHHC (B)

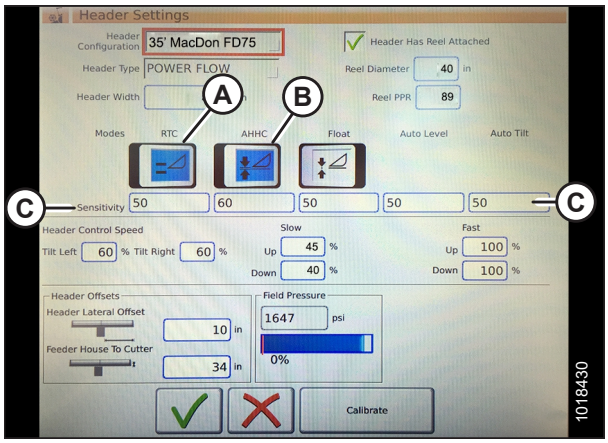

Figure 3.213: Automatic Controls and Sensitivity Settings

3. **Header Speed:** HEADER CONTROL SPEED area (A) on the HEADER SETTINGS page is used to adjust the following speeds:

   - Tilt left and right is the lateral tilt of the combine faceplate
   - Header up and down (slow and fast speeds) is a two-stage button with slow speed on the first detent and fast on the second

   NOTE:

   Recommended header control speed starting points

   - Slow: Up 45/Down 40
   - Fast: Up 100/Down 100

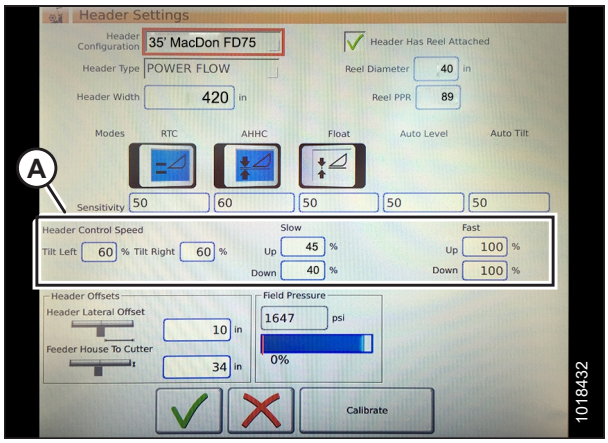

Figure 3.214: Header Speed Control Settings

4. **Header Offsets (A):** Offset distances are important for yield mapping. There are two adjustable dimensions on the HEADER SETTINGS page:
   - Header Lateral Offset: the distance between the centerline of the header and the centerline of the machine. This should be set at **0** for a MacDon header.
   - Feeder House to Cutter: the distance from the machine interface to the cutterbar. This should be set at **68** for a MacDon header.

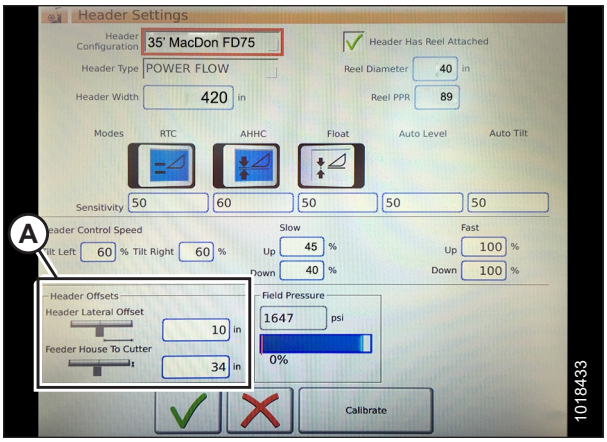

Figure 3.215: Header Offset Settings

Calibrating the Header – AGCO IDEAL™ Series

The auto header control functions are configured on the HEADER SETTINGS page.

WARNING

Clear the area of other persons, pets etc. Keep children away from machinery. Walk around the machine to be sure no one is under, on, or close to it.

NOTE:

Up-to-date images of the IDEAL™ combine display were not available at time of publishing. For instructions, refer to the combine operator's manual for updates.

1. On the COMBINE MAIN MENU, touch HEADER SETTINGS (A).

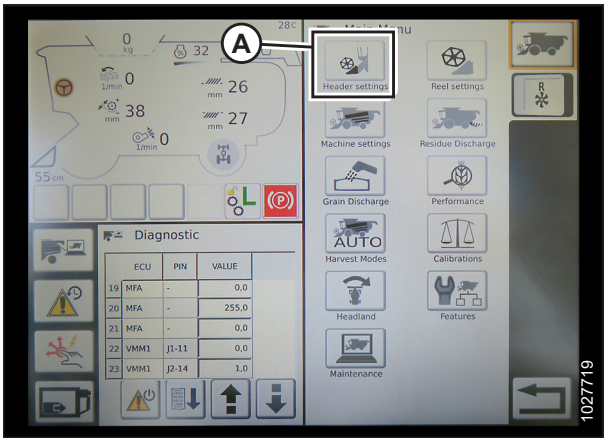

Figure 3.216: Combine Main Menu

2. Touch HEADER CALIBRATE (A) at the right side of the HEADER SETTINGS CONFIG page.

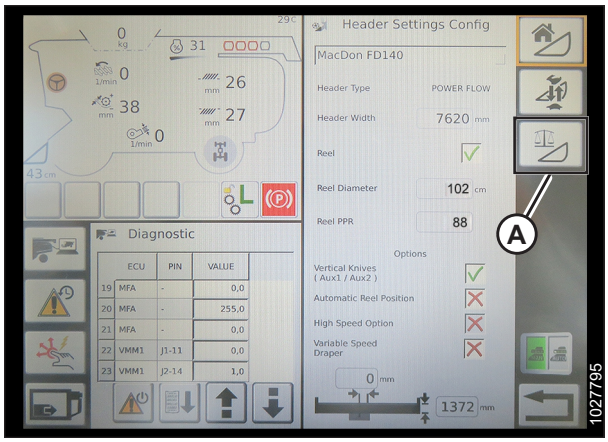

Figure 3.217: Header Settings Page

3. The hazard warning for HEADER CALIBRATION appears. Make sure that all conditions are met.
4. Touch the green check mark at the bottom of the page to start the calibration and follow the on-screen commands.

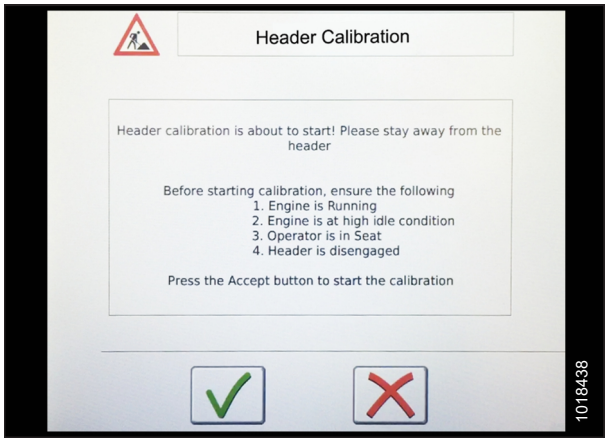

Figure 3.218: Header Calibration Warning

A progress bar is provided and the calibration can be stopped by touching the red X. The header moves automatically and erratically during this process.

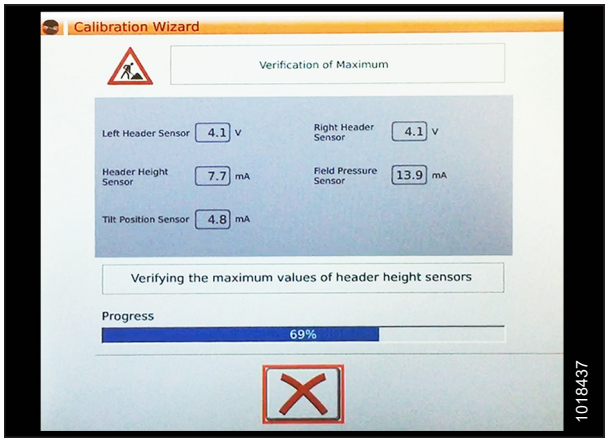

Figure 3.219: Calibration in Progress

5. When the calibration is complete:
   - Review summary information (A)
   - Review green check marks confirming calibrated functions (B)
   - Touch check mark (C) to save

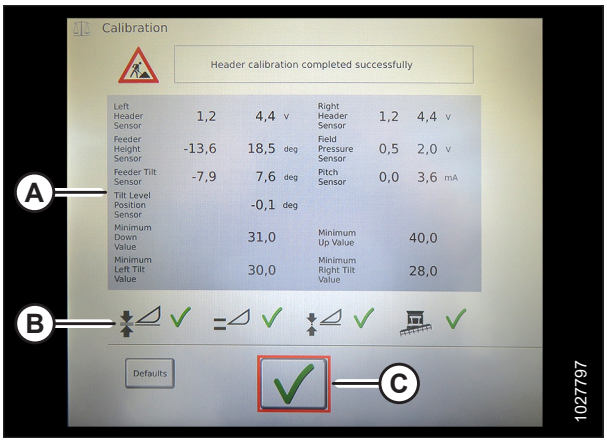

Figure 3.220: Completed Calibration Page

NOTE:

Touch CALIBRATIONS icon (A) on MAIN MENU page to display the CALIBRATION MENU where you can choose from a variety of calibrations including header and reel calibration.

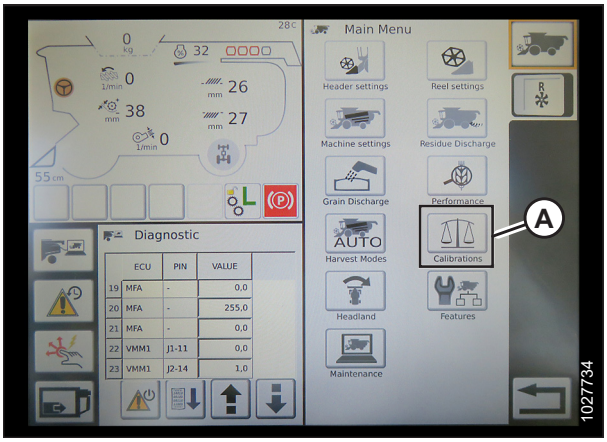

Figure 3.221: Direct Calibration Menu

Operating the Header – AGCO IDEAL™ Series

NOTE:

Up-to-date images of the IDEAL™ combine display were not available at time of publishing. For instructions, refer to the combine operator's manual for updates.

The following controls are used to operate the auto header height control (AHHC) functions:

- Tyton terminal (A)
- Control handle (B)
- Throttle (C)
- Header control cluster (D)

For instructions, refer to the combine operator's manual to familiarize yourself with the controls.

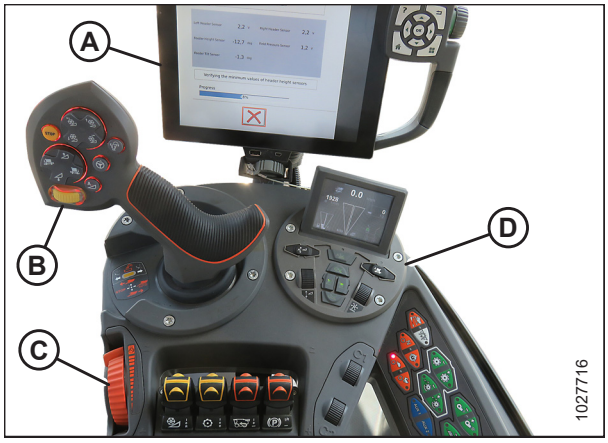

Figure 3.222: AGCO IDEAL™ Operator Station

1. With the header running, set lateral tilt to MANUAL by pressing switch (A) so the light above switch is off.
2. Engage the AHHC by pressing switch (B) so light above switch is on.

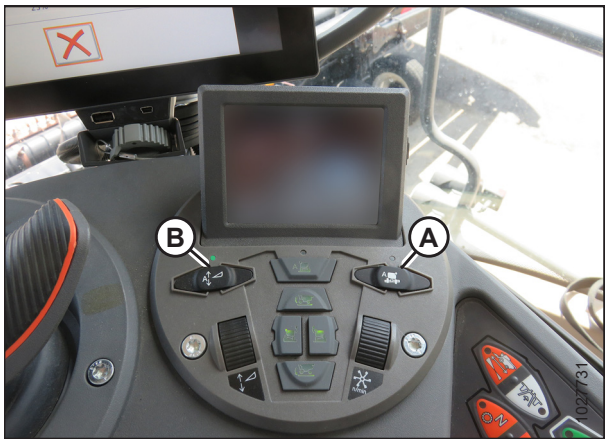

Figure 3.223: Header Control Cluster

3. Press AHHC control switch (A) on the control handle to engage the AHHC. The header moves to the current setpoint position.

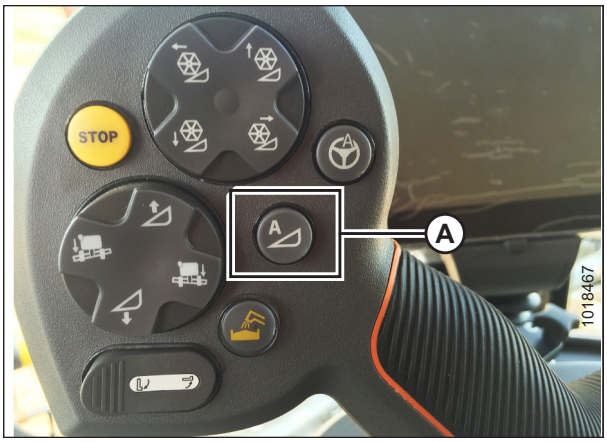

Figure 3.224: AHHC on Control Handle

4. Use HEADER HEIGHT SETPOINT control dial (A) as necessary to fine-tune the position.



Figure 3.225: Header Control Cluster

Reviewing Header In-Field Settings – AGCO IDEAL™ Series

NOTE:

Up-to-date images of the IDEAL™ combine display were not available at time of publishing. For instructions, refer to the combine operator's manual for updates.

1. To view header group settings, touch HEADER icon (A) on the right side of the home page.
2. The following information is displayed:
   - CURRENT POSITION of header (B).
   - SETPOINT cut-off position (C) (indicated by red line)
   - HEADER symbol (D) – touch to adjust the setpoint cut-off position using the adjustment wheel on the right side of the Tyton terminal.
   - CUT HEIGHT for AHHC (E) – fine-tune with the header height setpoint control dial on the header control cluster.
   - HEADER WORKING WIDTH (F)
   - HEADER PITCH (G)

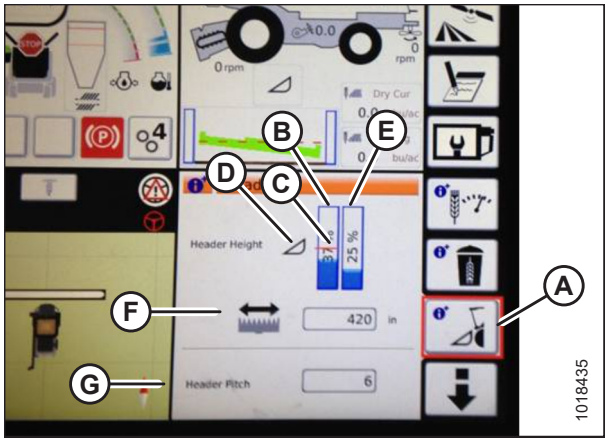

Figure 3.226: Header Groups

3. Touching a field opens the on-screen keyboard so that values can be adjusted. Enter the new value and touch the green check mark when complete.

   NOTE:

   Adjustment wheel (A) is located on the right of the Tyton terminal.

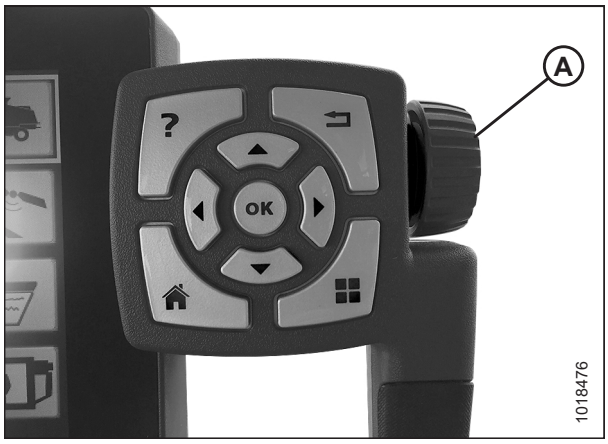

Figure 3.227: Adjustment Wheel on Right of Tyton Terminal

NOTE:

HEADER HEIGHT SETPOINT control dial (A) is on the header control cluster.



Figure 3.228: Header Control Cluster

3.9.5 Case IH 5088/6088/7088 Combines

Calibrating the Auto Header Height Control – Case IH 5088/6088/7088

For best performance of the auto header height control (AHHC) system, perform ground calibration with center-link set to **D**. When calibration is complete, adjust the center-link back to desired header angle. For instructions, refer to *3.8.4 Header Angle, page 101*.

NOTE:

Changes may have been made to the combine controls or display since this document was published. For instructions, refer to the combine operator's manual for updates.

WARNING

Check to be sure all bystanders have cleared the area.

NOTE:

If header float is set too light, it can prevent calibration of AHHC. You may need to set the float heavier for calibration procedure so header doesn't separate from the float module.

1. Ensure center-link is set to **D**.
2. Set the float. For instructions, refer to *3.8.3 Header Float, page 94*.
3. Position fore-aft in midspan.
4. Start the combine engine, but do **NOT** engage separator or feeder house.
5. Locate HEADER CONTROL switch (A) on the right console, and set to HT (this is AHHC mode).

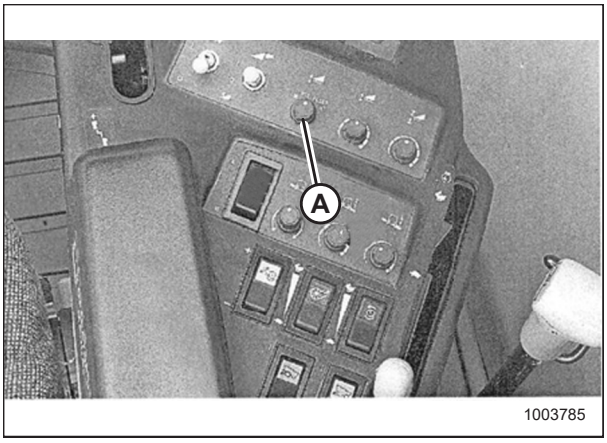

Figure 3.229: Right Console

6. Press HEADER LOWER switch (A) on the control handle until the float module and header are fully lowered. You may need to hold the switch for several seconds.
7. Press HEADER RAISE switch (A) on the control handle. The header should stop at about the halfway point. Continue holding the HEADER RAISE switch, and the header will rise until the feeder house reaches its upper limit. The AHHC system is now calibrated.

   NOTE:

   If float was set heavier to complete the AHHC calibration procedure, adjust to recommended operating float after the calibration is complete.

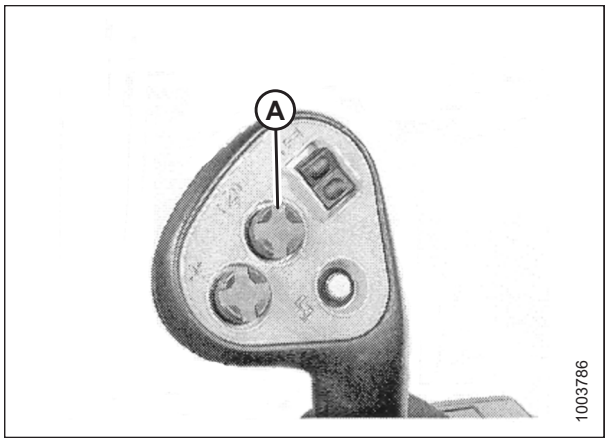

Figure 3.230: Control Handle – Case IH 2300/2500

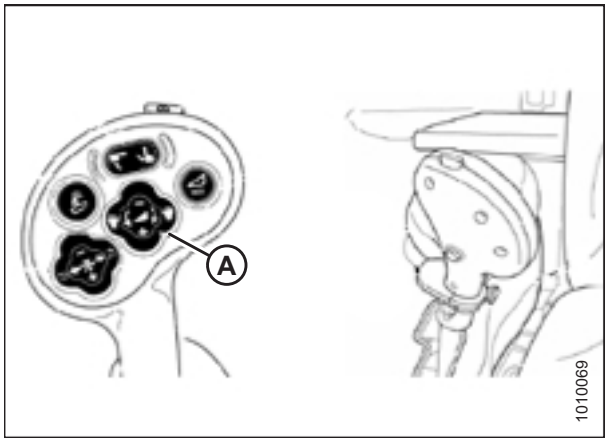

Figure 3.231: Control Handle – Case IH 5088/6088/7088

Setting the Sensitivity of the Auto Header Height – Case IH 5088/6088/7088

The sensitivity adjustment controls the distance the cutterbar must travel up or down before the auto header height control (AHHC) reacts and raises or lowers the feeder house. When the sensitivity is set to maximum, only small changes in ground height are needed to cause the feeder house to raise or lower. When the sensitivity is set to minimum, large changes in the ground height are needed to cause the feeder house to raise or lower.

NOTE:

Changes may have been made to the combine controls or display since this document was published. Refer to the combine operator's manual for updates.

1. Use HEADER SETTINGS key (A) to display the HEADER SENSITIVITY CHANGE page as shown in Figure *3.233, page 180*.
2. Use the UP key (B) or DOWN key (C) to adjust the highlighted item. The height sensitivity setting range is 0 (least sensitive) to 250 (most sensitive) in increments of 10.

   NOTE:

   Adjustments take effect immediately. Use the CANCEL key to return to the original settings.
3. Use HEADER SETTINGS key (A) to highlight the next changeable item.
4. Use ENTER key (D) to save changes and return to the monitor screen. If there are no changes, the screen will return to the monitor screen after 5 seconds.



Figure 3.232: Combine Controls

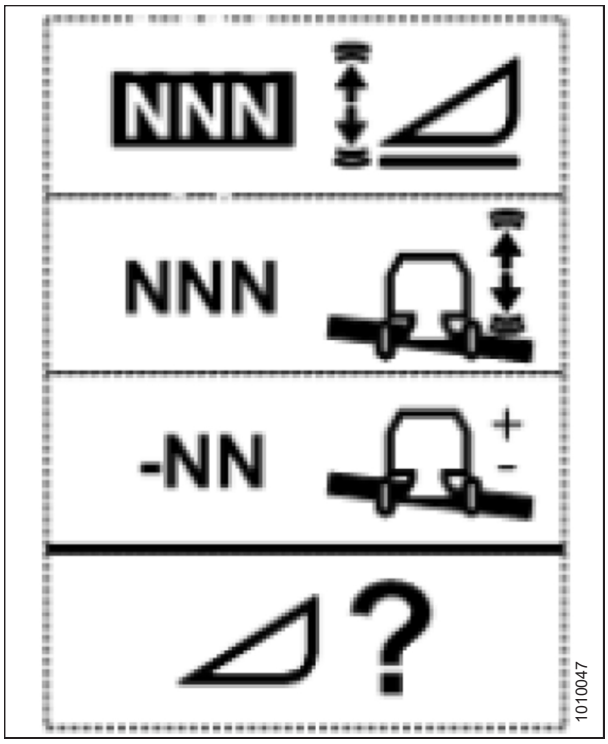

Figure 3.233: Height Sensitivity Change Page

3.9.6 Case IH 130 and 140 Series Mid-Range Combines

Setting up the Header on the Combine Display – Case IH 5130/6130/7130; 5140/6140/7140

1. On the main page of the combine display, select TOOLBOX (A).

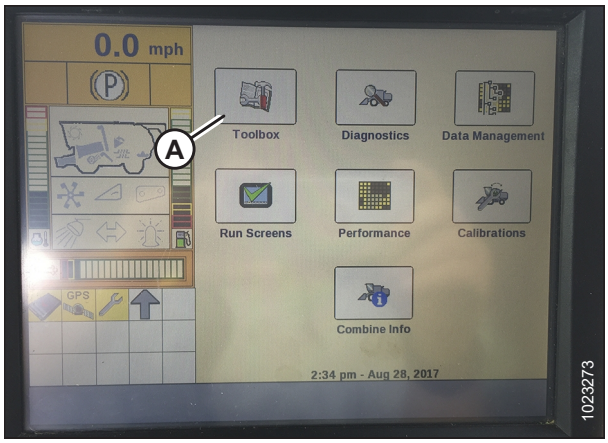

Figure 3.234: Case IH Combine Display

2. Select HEAD 1 tab (A). The HEADER SETUP page displays.

   NOTE:

   To locate the HEAD 1 tab, you may need to scroll to the right using side arrows (C).

3. From CUTTING TYPE menu (B), select PLATFORM.

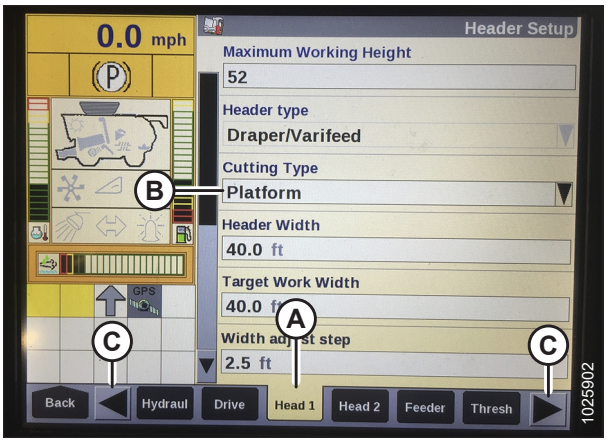

Figure 3.235: Case IH Combine Display

4. Select HEAD 2 tab (A). The HEADER SETUP 2 page displays.
5. From HEADER PRESSURE FLOAT menu (B), select NOT INSTALLED.
6. If you are operating a D1 Series Draper Header, from DRAPER GRAIN HEADER STYLE menu (C), select RIGID 2000 SERIES.

   If you are operating an FD1 Series FlexDraper® Header, from DRAPER GRAIN HEADER STYLE menu (C), select FLEX 2000 SERIES.

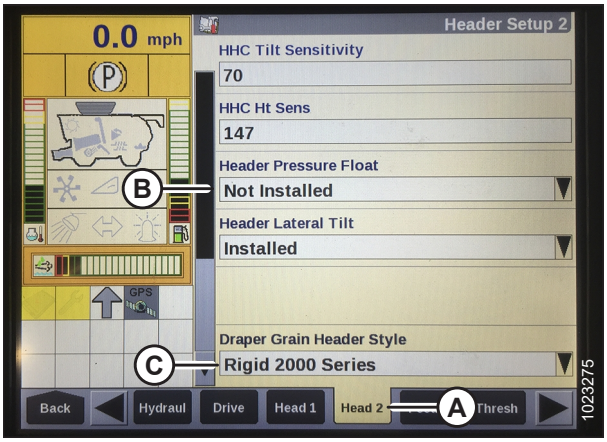

Figure 3.236: Case IH Combine Display

7. Locate HHC HEIGHT SENSITIVITY field (A), and set as follows:

   - **If using a two-sensor system:** Set HHC HEIGHT SENSITIVITY to 250.
   - **If using a single-sensor system:** Set HHC HEIGHT SENSITIVITY to 180.

   NOTE:

   If hunting occurs during operation, decrease this setting by 20 points at a time until hunting no longer occurs.

8. Set HHC TILT SENSITIVITY (B) to 150. Increase or decrease as desired.

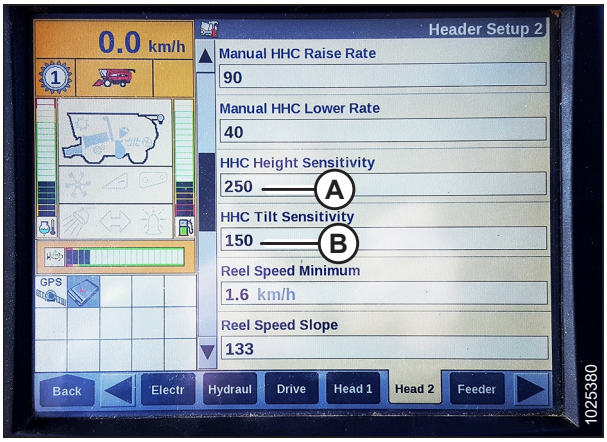

Figure 3.237: Case IH Combine Display

9. From REEL DRIVE TYPE menu (A), select one of the following:
   - 4 if you are using a standard 19-tooth drive sprocket.
   - 5 if you are using an optional high-torque 14-tooth drive sprocket.
   - 6 if you are using an optional high-torque 10-tooth drive sprocket.

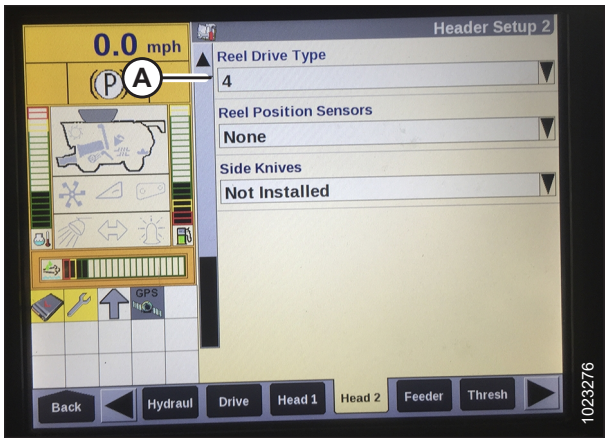

Figure 3.238: Case IH Combine Display

10. From REEL HEIGHT SENSOR menu (A), select YES.

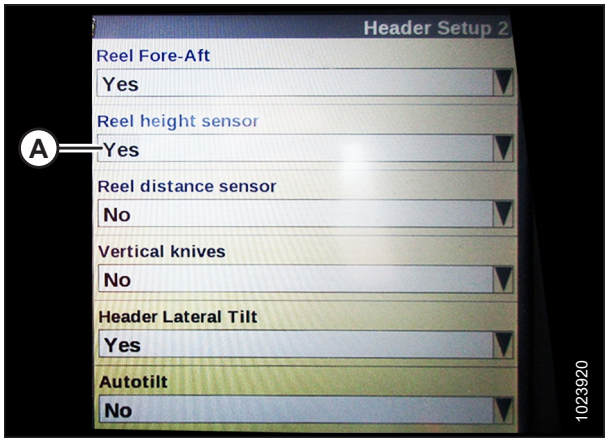

Figure 3.239: Case IH Combine Display

11. Locate AUTOTILT field (A).
    - **If using a two-sensor system:** Select YES in the AUTOTILT field.
    - **If using a single-sensor system:** Select NO in the AUTOTILT field.

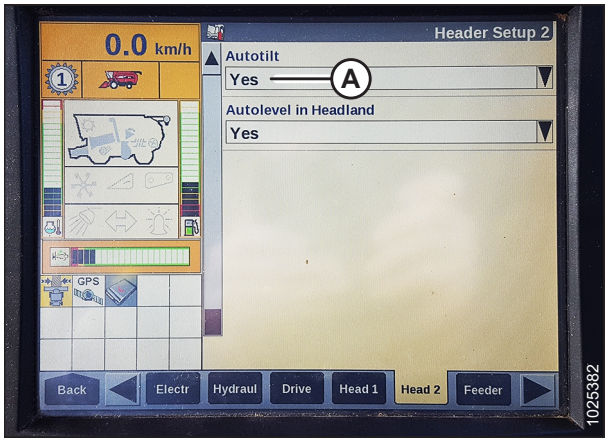

Figure 3.240: Case IH Combine Display

Checking Voltage Range from Combine Cab – Case IH 5130/6130/7130; 5140/6140/7140

NOTE:

Changes may have been made to combine controls or display since this document was published. For instructions, refer to the combine operator's manual for updates.

WARNING

Check to be sure all bystanders have cleared the area.

1. Position the header 150 mm (6 in.) above the ground, and unlock the float.
2. Check that float lock linkage is on down stops (washer [A] cannot be moved) at both locations.

   NOTE:

   If the header is not on down stops during the next two steps, the voltage may go out of range during operation causing a malfunction of the auto header height control (AHHC) system. If the header is not on down stops, refer to *3.10 Leveling the Header, page 348* for instructions.

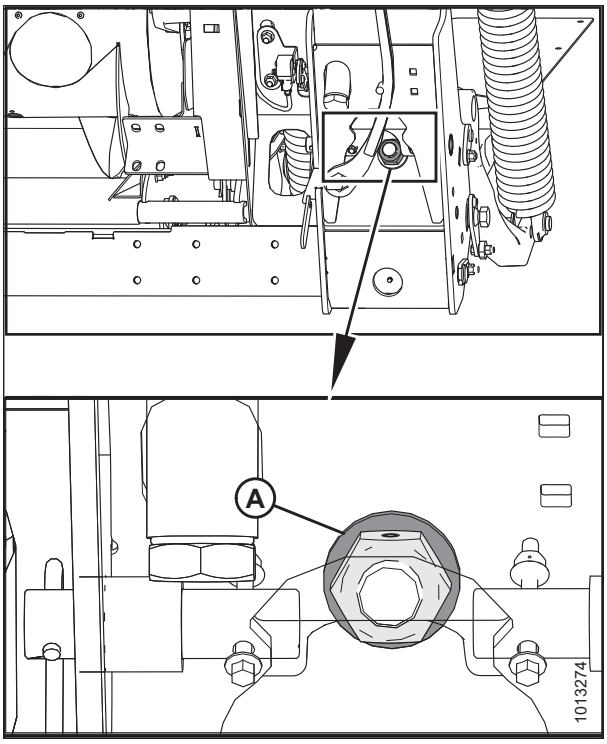

Figure 3.241: Float Lock

3. Adjust cable take-up bracket (B) (if necessary) until pointer (A) on float indicator is on **0**.
4. Ensure header float is unlocked.

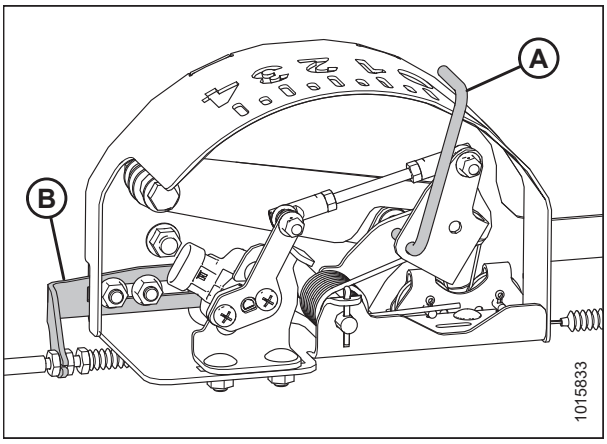

Figure 3.242: Float Indicator Box

5. On the main page of the combine display, select DIAGNOSTICS (A). The DIAGNOSTICS page opens.

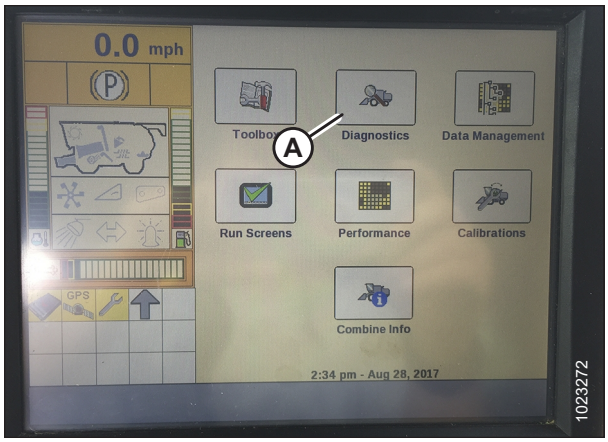

Figure 3.243: Case IH Combine Display

6. Select SETTINGS (A). The SETTINGS page opens.
7. From the GROUP menu, select HEADER (B).

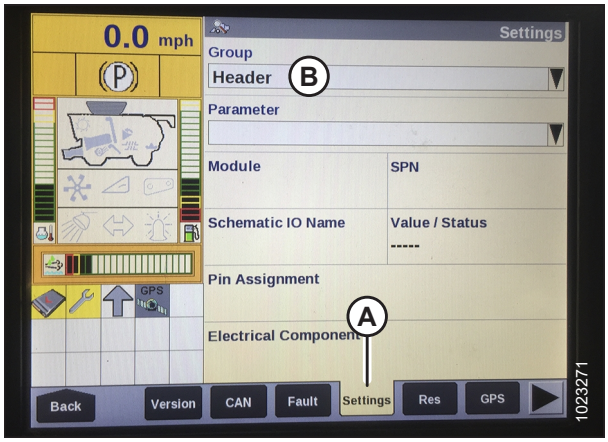

Figure 3.244: Case IH Combine Display

8. From the PARAMETER menu, select LEFT HEIGHT/TILT SENSOR (A).

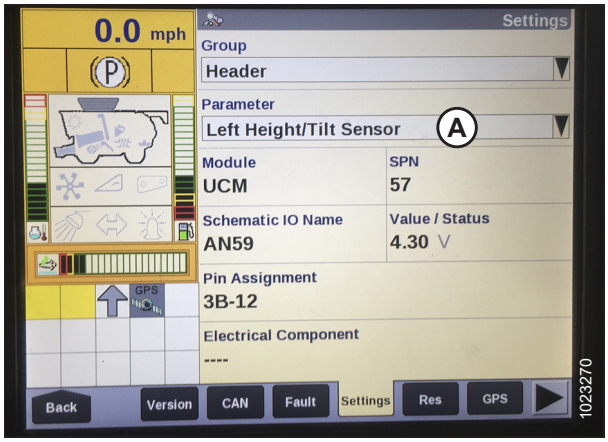

Figure 3.245: Case IH Combine Display

9. The SETTINGS page updates to display the voltage in VALUE/STATUS field (A). Lower the feeder house fully, and then raise it 305 mm (12 in.) off the ground to view the full range of voltage readings.
10. If the sensor voltage is not within the low and high limits, or if the range between the low and high limits is insufficient, adjust the voltage limits. For instructions, refer to *Adjusting Voltage Limits – One-Sensor System, page 159*.

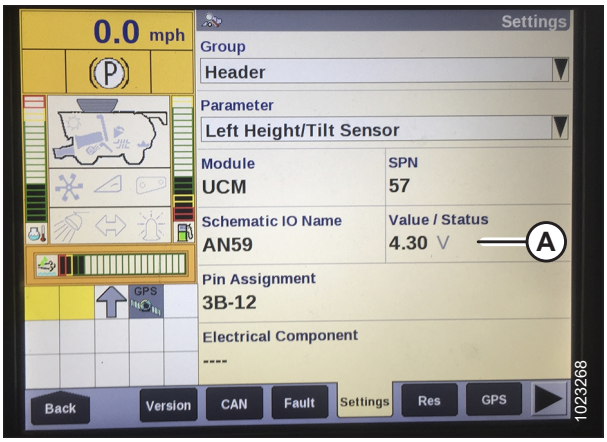

Figure 3.246: Case IH Combine Display

Calibrating Auto Header Height Control – Case IH 5130/6130/7130, 5140/6140/7140

For best performance of the auto header height control (AHHC), perform these procedures with center-link set to **D**. When setup and calibration are complete, adjust center-link back to desired header angle. Refer to *3.8.4 Header Angle, page 101*.

WARNING

Clear the area of other persons, pets etc. Keep children away from machinery. Walk around the machine to be sure no one is under, on, or close to it.

NOTE:

This procedure applies to combines with a software version below 28.00. For instructions on calibrating the AHHC for combines with software version 28.00 or above, refer to *Calibrating the Auto Header Height Control – Case IH Combines with Version 28.00 or Higher Software, page 199*.

NOTE:

Changes may have been made to the combine controls or display since this document was published. For instructions, refer to the combine operator's manual for updates.

NOTE:

If header float is set too light, it can prevent calibration of AHHC. You may need to set the float heavier for calibration procedure so header doesn't separate from the float module.

1. Ensure center-link is set to **D**.
2. Ensure all header and float module electrical and hydraulic connections are made.
3. Start the combine engine, but do **NOT** engage separator or feeder house.

4. Locate HEADER CONTROL switch (A) on the right console, and set to HT (this is AHHC mode).
5. Hold the DOWN button for 10 seconds, or until the combine feeder house has been lowered all the way down (the feeder house will stop moving).
6. Push the RAISE button and hold it until the feeder house travels all the way up. It will stop 61 cm (2 ft.) above ground for 5 seconds, then it will resume lift. This is an indication that calibration is successful.

   NOTE:

   If float was set heavier to complete the AHHC calibration procedure, adjust to recommended operating float after the calibration is complete.

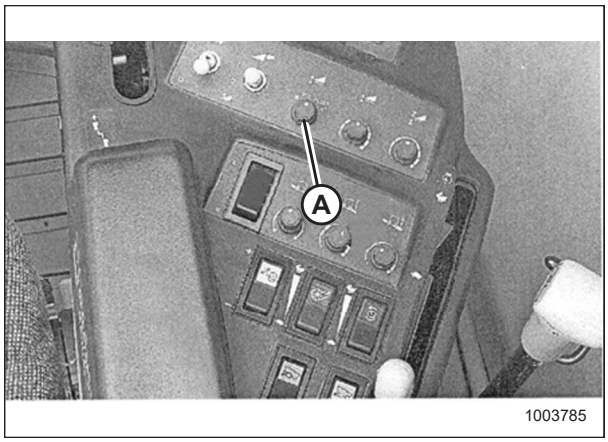

Figure 3.247: Right Console

Setting Preset Cutting Height – Case 5130/6130/7130, 5140/6140/7140

To set preset cutting height, follow these steps:

NOTE:

Changes may have been made to the combine controls or display since this document was published. Refer to the combine operator's manual for updates.

WARNING

Check to be sure all bystanders have cleared the area.

NOTE:

Indicator (A) should be at position 0 (B) with the header 152 mm (6 in.) off the ground. If not, the float sensor output voltage should be checked. For instructions, refer to Step *5, page 154*. When the header is on the ground, the indicator should be at position 1 (C) for low ground pressure, and at position 4 (D) for high ground pressure. Crop and soil conditions determine the amount of float to use. The ideal setting is as light as possible without header bouncing or missing crop. Operating with heavy settings prematurely wears the cutterbar wearplates.

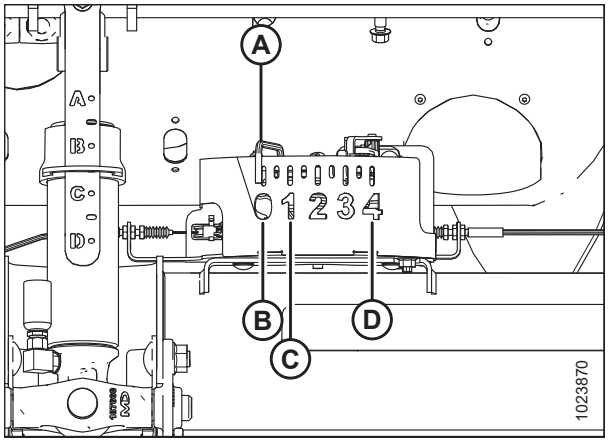

Figure 3.248: Float Indicator Box

1. Engage separator and header.
2. Manually raise or lower the header to the desired cutting height.
3. Press 1 on button (A). A yellow light next to the button will illuminate.

   NOTE:

   When setting presets, always set header position before setting reel position. If header and reel are set at the same time, the reel setting will not be saved.
4. Manually raise or lower the reel to the desired working position.
5. Press 1 on button (A). A yellow light next to the button will illuminate.

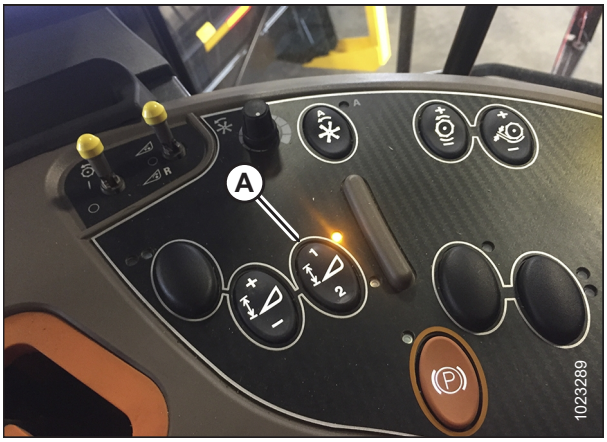

Figure 3.249: Case Combine Console

6. Manually raise or lower the header to a second desired cutting height.
7. Press 2 on button (A). A yellow light next to the button will illuminate.
8. Manually raise or lower the reel to the desired working position.
9. Press 2 on button (A). A yellow light next to the button will illuminate.



Figure 3.250: Case Combine Console

Up and down arrows should now appear in MANUAL HEIGHT box (A) on the RUN 1 page on the combine display. This indicates that the auto header height control (AHHC) is functioning.

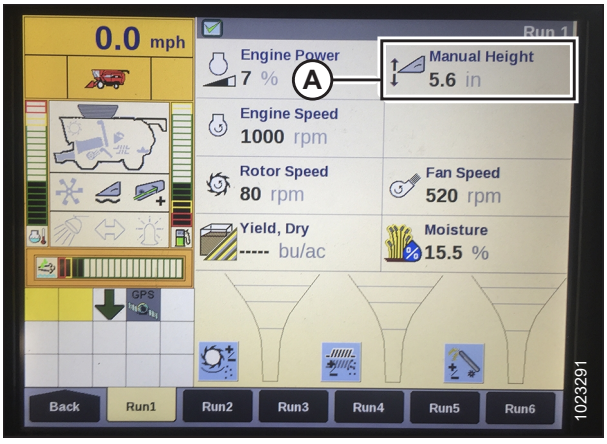

Figure 3.251: Case Combine Display – Run 1 Page

10. To enable the presets, activate AHHC button (A) to place the header on the ground. To enable the first preset, tap the button once. To enable the second preset, tap the button twice.

    To lift the header to maximum working height, hold the SHIFT button on the back of the control handle while tapping AHHC button (A).



Figure 3.252: Case Combine Control Handle

11. The maximum working height can be adjusted on the HEADER SETUP page on the combine display. Enter the desired height in MAXIMUM WORKING HEIGHT field (A).

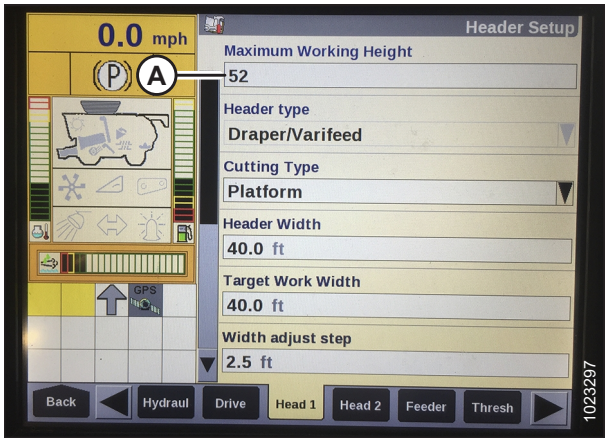

Figure 3.253: Case Combine Display – Header Setup Page

12. If you need to change the position of one of the presets, you can fine-tune this setting with button (A) on the combine console.



Figure 3.254: Case Combine Console

3.9.7 Case IH 7010/8010, 120, 230, 240, and 250 Series Combines

Checking Voltage Range from the Combine Cab – Case IH 8010

NOTE:

Changes may have been made to the combine controls or display since this document was published. Refer to the combine operator's manual for updates.

WARNING

Check to be sure all bystanders have cleared the area.

1. Position the header 150 mm (6 in.) above the ground, and unlock the float.
2. Check that float lock linkage is on down stops (washer [A] cannot be moved) at both locations.

   NOTE:

   If the header is not on down stops during the next two steps, the voltage may go out of range during operation causing a malfunction of the AHHC system. If the header is not on down stops, refer to *3.10 Leveling the Header, page 348* for instructions.

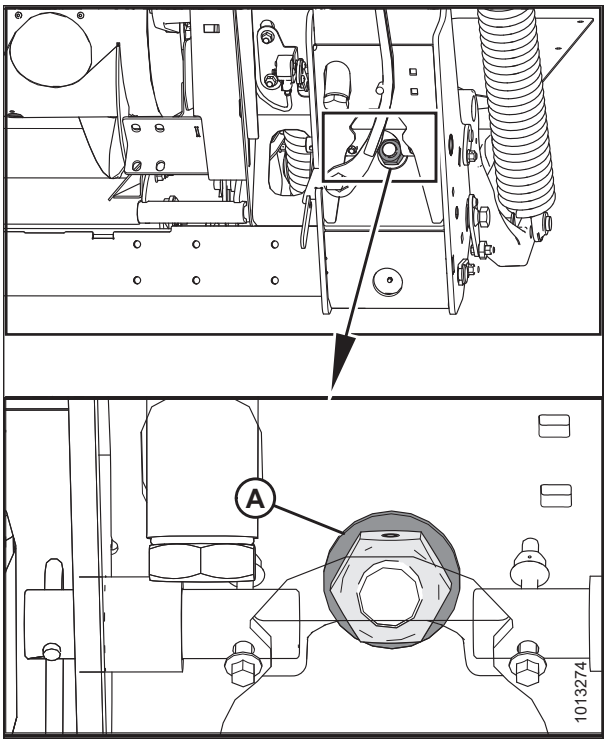

Figure 3.255: Float Lock

3. Adjust cable take-up bracket (B) (if necessary) until pointer (A) on float indicator is on **0**.

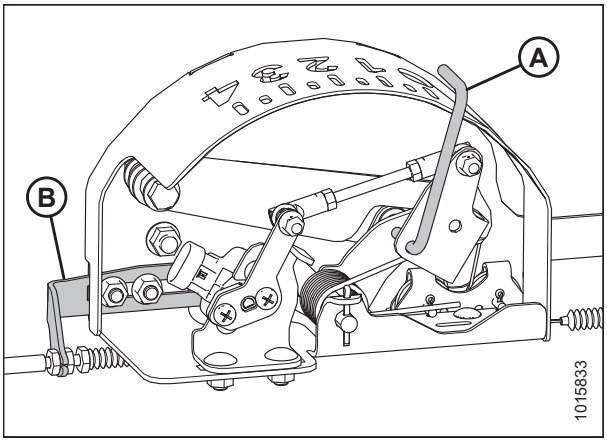

Figure 3.256: Float Indicator Box

4. Ensure header float is unlocked.
5. Select DIAG (A) on the Universal display MAIN screen. The DIAG screen displays.

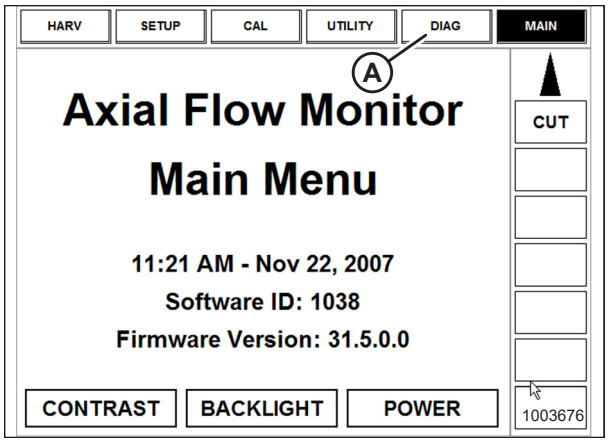

Figure 3.257: Case 8010 Combine Display

6. Select SUB SYSTEM (A). The SUB SYSTEM screen displays.

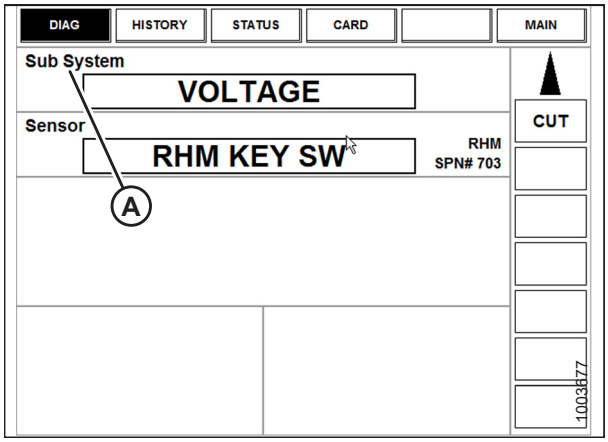

Figure 3.258: Case 8010 Combine Display

7. Select HDR HEIGHT/TILT (A). The SENSOR screen displays.

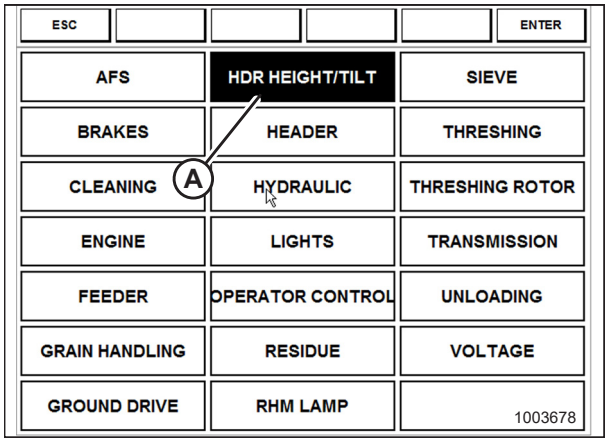

Figure 3.259: Case 8010 Combine Display

8. Select LEFT SEN (A). The exact voltage is displayed. Raise and lower the header to see the full range of voltage readings.

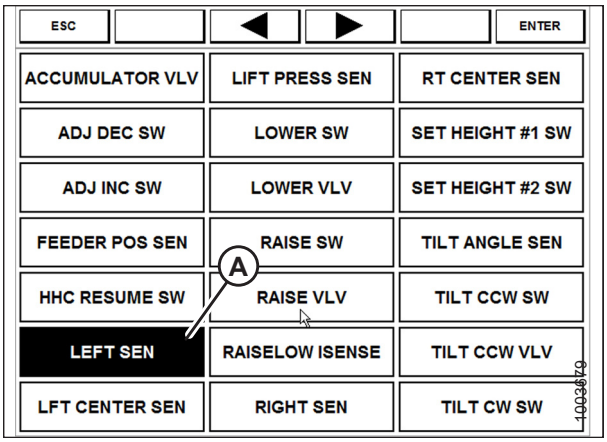

Figure 3.260: Case 8010 Combine Display

9. If the sensor voltage is not within the low and high limits, or if the range between the low and high limits is insufficient, adjust the voltage limits. For instructions, refer to *Adjusting Voltage Limits – One-Sensor System, page 159*.



Figure 3.261: Case 8010 Combine Display

Setting Header Controls – Case IH 8010

The following procedure applies to Case IH 8010 combines without a shift button on the control handle.

The REEL FORE-AFT switches (A) also control header fore-aft tilt if header is equipped with the fore-aft tilt option. The switches can be configured to allow the Operator to swap between reel fore-aft and header fore-aft tilt.

To set the header controls, follow these steps:

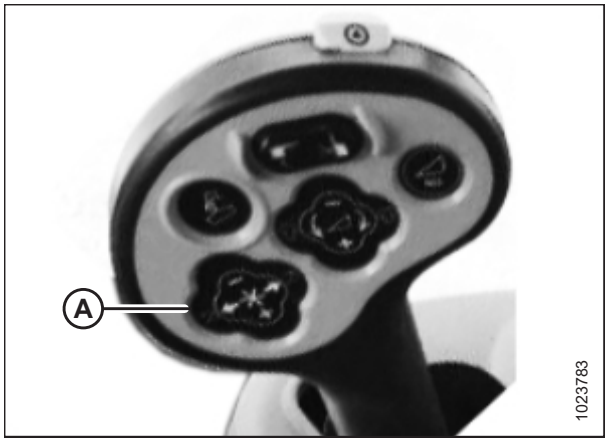

Figure 3.262: Case Combine Controls

1. To swap between reel fore-aft controls and header fore-aft tilt controls, go to the LAYOUT tab, select FORE/AFT CONTROL (A) from the legend, and place it on one of the operator-configurable screens (HARV1, HARV2, HARV3) or ADJUST under the RUN menu.

   NOTE:

   H F/A (B) is displayed on the status bar on the right of the screen when HEADER is selected with the FORE/AFT CONTROL.

2. If HEADER is selected with the FORE/AFT CONTROL, press the reel aft button on the control handle to tilt the header rearward, or press the reel fore button on the control handle to tilt the header forward.

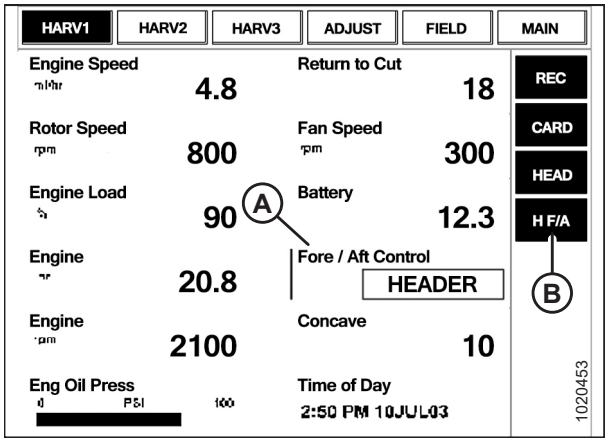

Figure 3.263: Case Combine Display

Checking Voltage Range from the Combine Cab – Case IH 7010/8010, 120, 230, 240, and 250 Series Combines

NOTE:

Changes may have been made to the combine controls or display since this document was published. Refer to the combine operator's manual for updates.

WARNING

Check to be sure all bystanders have cleared the area.

1. Position the header 150 mm (6 in.) above the ground, and unlock the float.
2. Check that float lock linkage is on down stops (washer [A] cannot be moved) at both locations.

   NOTE:

   If the header is not on down stops during the next two steps, the voltage may go out of range during operation causing a malfunction of the auto header height control (AHHC) system. If the header is not on down stops, refer to *3.10 Leveling the Header, page 348* for instructions.

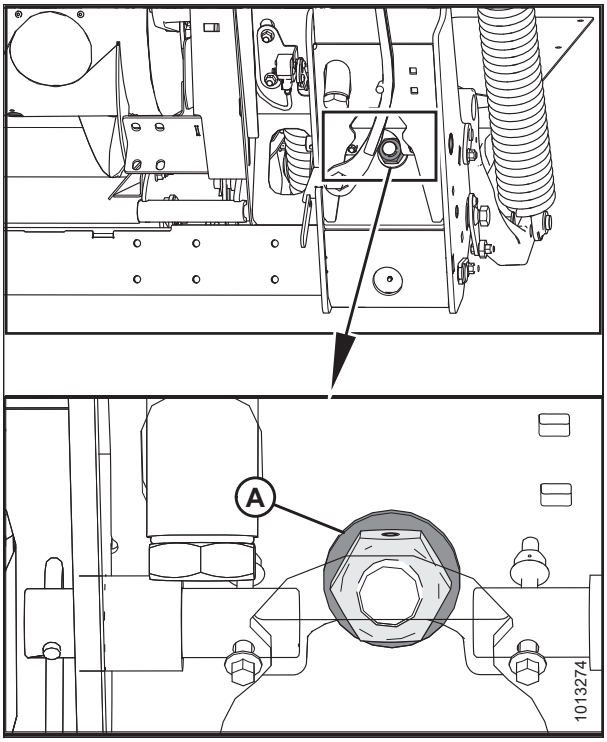

Figure 3.264: Float Lock

3. Adjust cable take-up bracket (B) (if necessary) until pointer (A) on float indicator is on **0**.

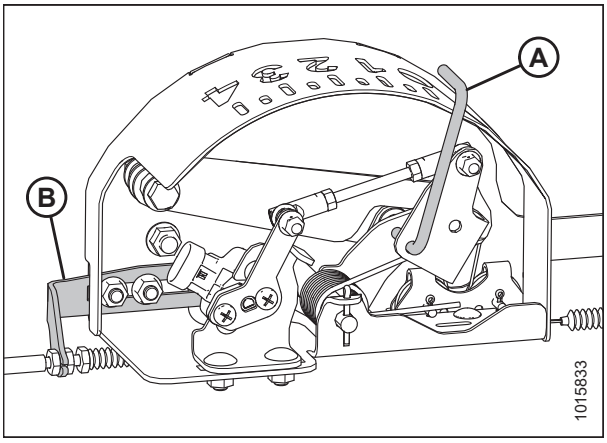

Figure 3.265: Float Indicator Box

4. Ensure header float is unlocked.
5. Select DIAGNOSTICS (A) on the MAIN page. The DIAGNOSTICS page opens.
6. Select SETTINGS. The SETTINGS page opens.

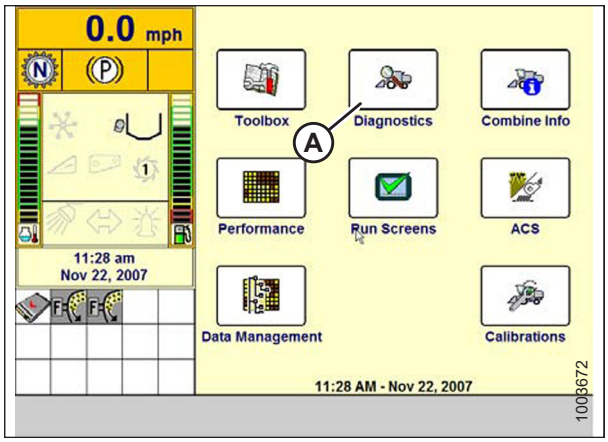

Figure 3.266: Case IH Combine Display

7. Select GROUP arrow (A). The GROUP dialog box opens.

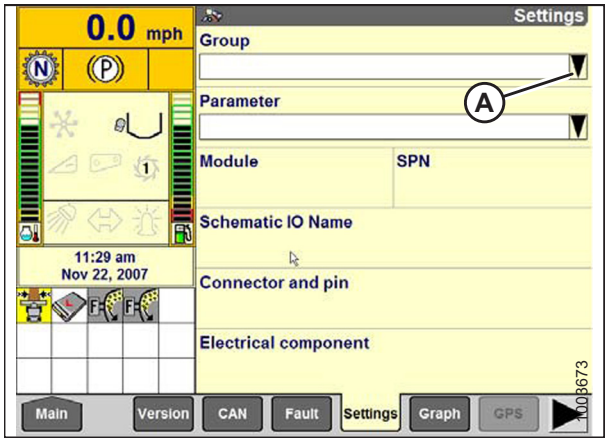

Figure 3.267: Case IH Combine Display

8. Select HEADER HEIGHT/TILT (A). The PARAMETER page opens.

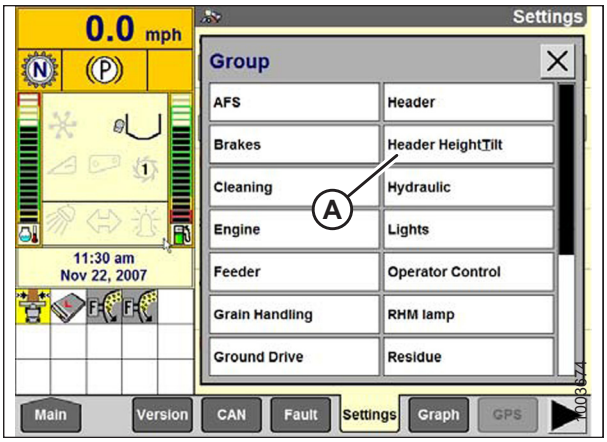

Figure 3.268: Case IH Combine Display

9. Select LEFT HEADER HEIGHT SEN (A), and then select the GRAPH button (B). The exact voltage is displayed at top of page. Raise and lower the header to see the full range of voltage readings.
10. If the sensor voltage is not within the low and high limits, or if the range between the low and high limits is insufficient, adjust the voltage limits. For instructions, refer to *Adjusting Voltage Limits – One-Sensor System, page 159*.

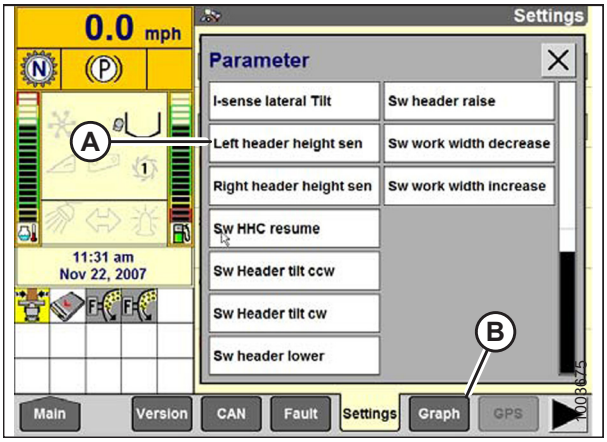

Figure 3.269: Case IH Combine Display

Calibrating the Auto Header Height Control – Case IH 7010/8010,120, 230, 240, and 250 Series Combines

For best performance of the auto header height control (AHHC), perform these procedures with the center-link set to **D**. When setup and calibration are complete, adjust the center-link back to desired header angle. For instructions, refer to *3.8.4 Header Angle, page 101*.

WARNING

Clear the area of other persons, pets etc. Keep children away from machinery. Walk around the machine to be sure no one is under, on, or close to it.

NOTE:

This procedure applies to combines with a software version below 28.00. For instructions on calibrating the AHHC for combines with software version 28.00 or above, refer to *Calibrating the Auto Header Height Control – Case IH Combines with Version 28.00 or Higher Software, page 199*.

NOTE:

Changes may have been made to the combine controls or display since this document was published. Refer to the combine operator's manual for updates.

NOTE:

If header float is set too light, it can prevent calibration of AHHC. You may need to set the float heavier for calibration procedure so header doesn't separate from the float module.

1. Ensure center-link is set to **D**.
2. Ensure all header and float module electrical and hydraulic connections are made.
3. Select TOOLBOX (A) on the MAIN page.

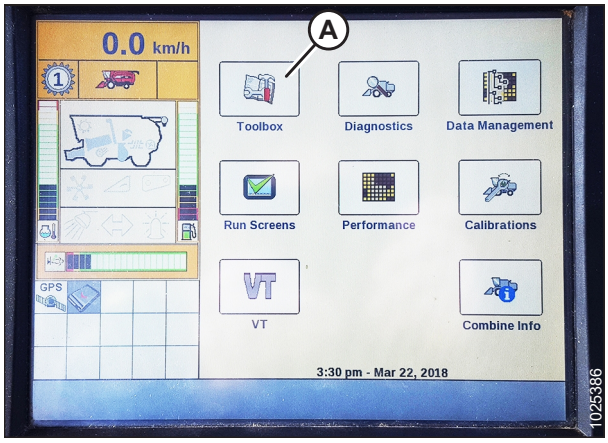

Figure 3.270: Case IH Combine Display

4. Select HEADER tab (A).

   NOTE:

   To locate the HEADER tab, you may need to scroll to the right using side arrows (C).

5. Set appropriate HEADER STYLE (B).

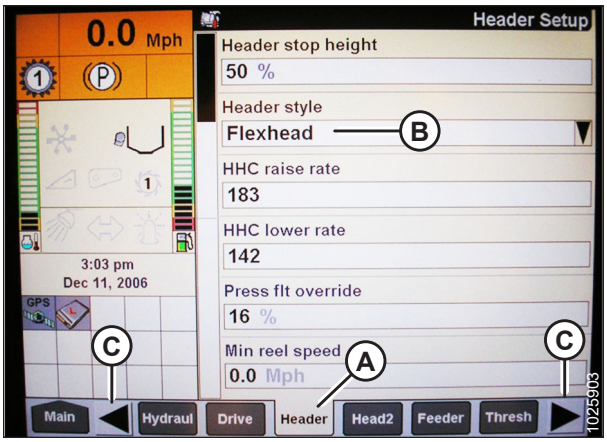

Figure 3.271: Case IH Combine Display

6. Set AUTO REEL SPEED SLOPE.

   NOTE:

   The AUTO REEL SPEED SLOPE value is the percentage of the reel speed compared to the ground speed. For example, if the value is set to 100, then the reel speed will be the same as the ground speed. Normally you want the reel going slightly faster than the ground speed. However, adjust the value according to crop conditions.

7. Set HEADER PRESSURE FLOAT to NO if equipped, and ensure REEL DRIVE is HYDRAULIC.

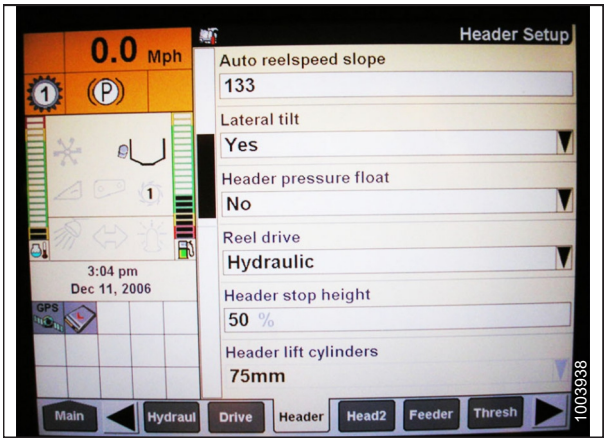

Figure 3.272: Case IH Combine Display

8. Install REEL FORE-BACK to YES (if applicable).

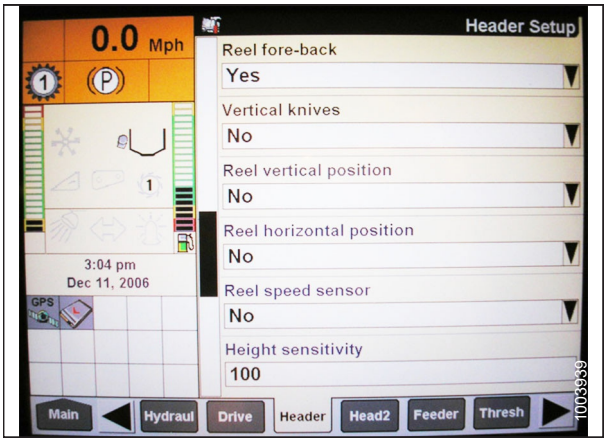

Figure 3.273: Case IH Combine Display

9. Locate HHC HEIGHT SENSITIVITY field (A), and set as follows:

   - **If using a two-sensor system:** Set HHC HEIGHT SENSITIVITY to 250.
   - **If using a single-sensor system:** Set HHC HEIGHT SENSITIVITY to 180.

   NOTE:

   If hunting occurs during operation, decrease this setting by 20 points at a time until hunting no longer occurs.

10. Set HHC TILT SENSITIVITY (B) to 150. Increase or decrease as desired.

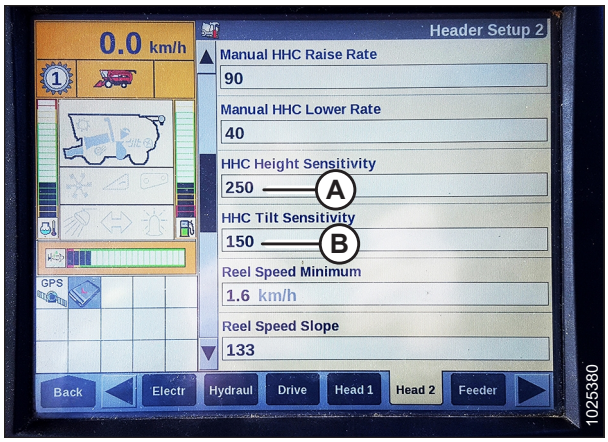

Figure 3.274: Case IH Combine Display

11. Install FORE/AFT CONTROL and HDR FORE/AFT TILT (if applicable).

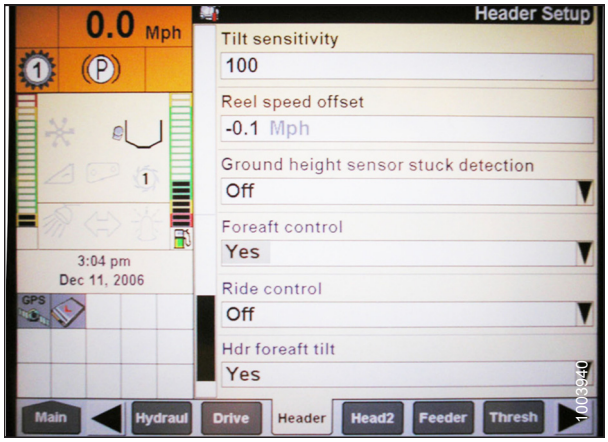

Figure 3.275: Case IH Combine Display

12. Press HEAD2 (A) at bottom of page.
13. Ensure HEADER TYPE (B) is DRAPER.

    NOTE:

    If recognition resistor is plugged in to header harness, you will not be able to change this.

14. Set CUTTING TYPE (C) to PLATFORM.
15. Set appropriate HEADER WIDTH (D) and HEADER USAGE (E).

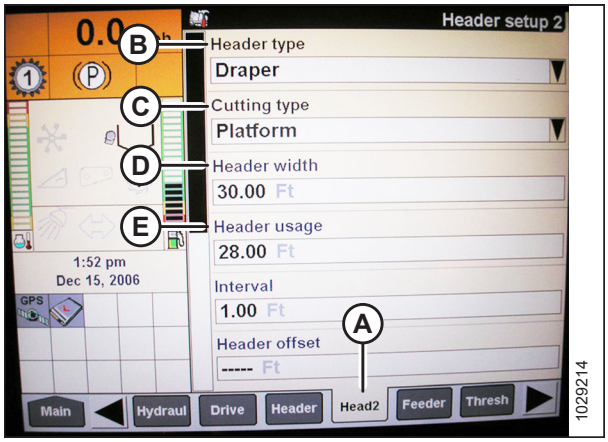

Figure 3.276: Case IH Combine Display

16. From the REEL HEIGHT SENSOR menu, select YES (A).

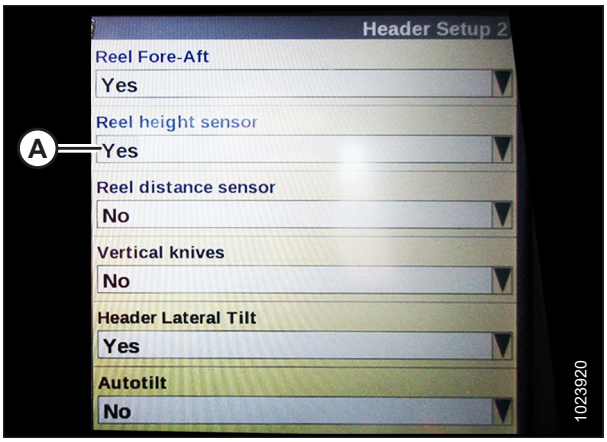

Figure 3.277: Case IH Combine Display

17. Locate AUTOTILT field (A).

    - **If using a two-sensor system:** Select YES in the AUTOTILT field.
    - **If using a single-sensor system:** Select NO in the AUTOTILT field.

    NOTE:

    If float was set heavier to complete the AHHC calibration procedure, adjust to recommended operating float after the calibration is complete.

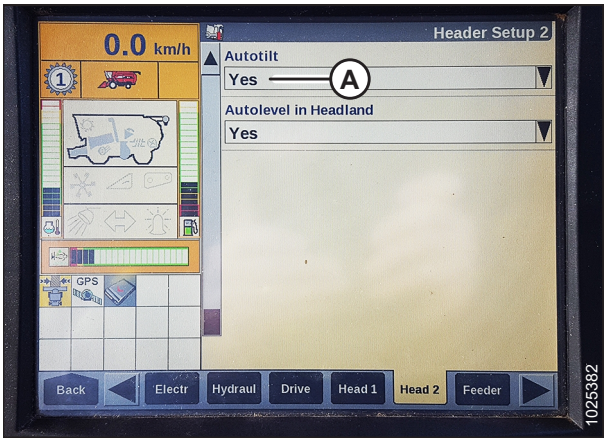

Figure 3.278: Case IH Combine Display

Calibrating the Auto Header Height Control – Case IH Combines with Version 28.00 or Higher Software

For best performance of the auto header height control (AHHC), perform these procedures with the center-link set to **D**. When setup and calibration are complete, adjust the center-link back to desired header angle. For instructions, refer to *3.8.4 Header Angle, page 101*.

⚠ WARNING

Clear the area of other persons, pets etc. Keep children away from machinery. Walk around the machine to be sure no one is under, on, or close to it.

NOTE:

Changes may have been made to the combine controls or display since this document was published. Refer to the combine operator's manual for updates.

NOTE:

If header float is set too light, it can prevent calibration of AHHC. You may need to set the float heavier for calibration procedure so header doesn't separate from the float module.

1. Ensure header center-link is set to **D**.
2. Raise header on down stops and unlock float.

3. Select TOOLBOX (A) on the MAIN page.

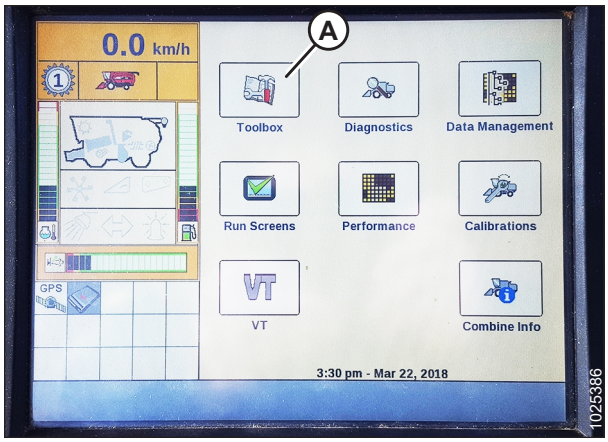

Figure 3.279: Case IH Combine Display

4. Select HEAD 1 tab (A).

   NOTE:

   To locate the HEAD 1 tab, you may need to scroll to the right using side arrows (B).

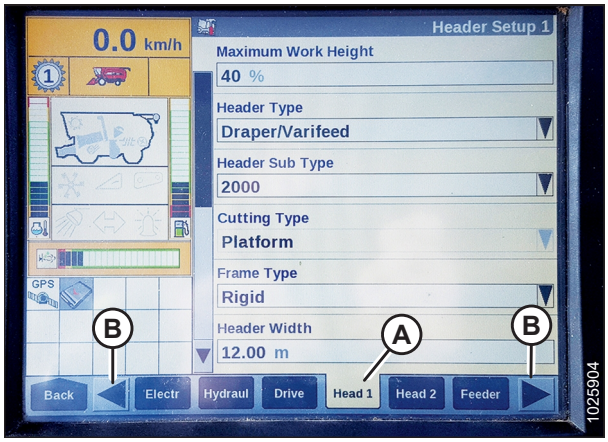

Figure 3.280: Case IH Combine Display

5. Locate the HEADER SUB TYPE field.
6. Select 2000 (A).

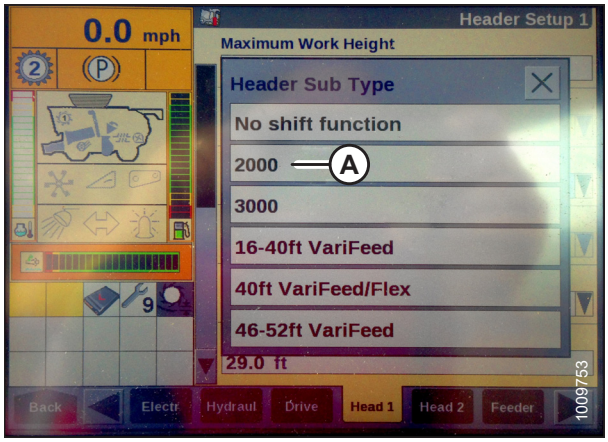

Figure 3.281: Case IH Combine Display

7. Select HEAD 2 tab (A).
8. In HEADER SENSORS field (B), select ENABLE.
9. In HEADER PRESSURE FLOAT field (C), select NO.
10. In HEIGHT/TILT RESPONSE field (D), select FAST.
11. In AUTO HEIGHT OVERRIDE field (E), select YES.
12. Press down arrow (F) to go to the next page.

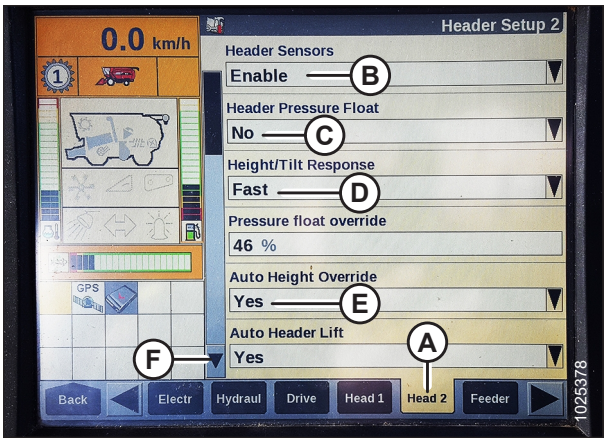

Figure 3.282: Case IH Combine Display

13. Locate HHC HEIGHT SENSITIVITY field (A), and set as follows:
    - **If using a single-sensor system:** Set HHC HEIGHT SENSITIVITY to 180.
    - **If using a two-sensor system:** Set HHC HEIGHT SENSITIVITY to 250.

    NOTE:

    If hunting occurs during operation, decrease this setting by 20 points at a time until hunting no longer occurs.
14. Set HHC TILT SENSITIVITY (B) to 150. Increase or decrease as desired.

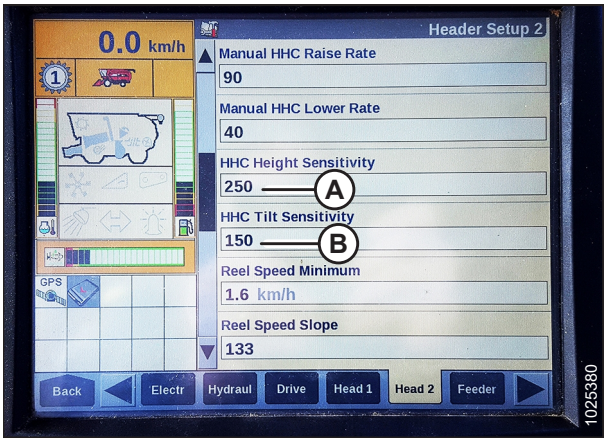

Figure 3.283: Case IH Combine Display

15. From the REEL HEIGHT SENSOR menu, select YES (A).

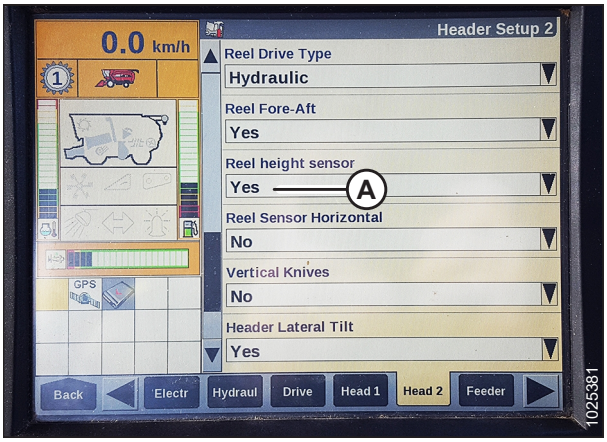

Figure 3.284: Case IH Combine Display

16. Locate AUTOTILT field (A).

    - **If using a two-sensor system:** Select YES in the AUTOTILT field.
    - **If using a single-sensor system:** Select NO in the AUTOTILT field.

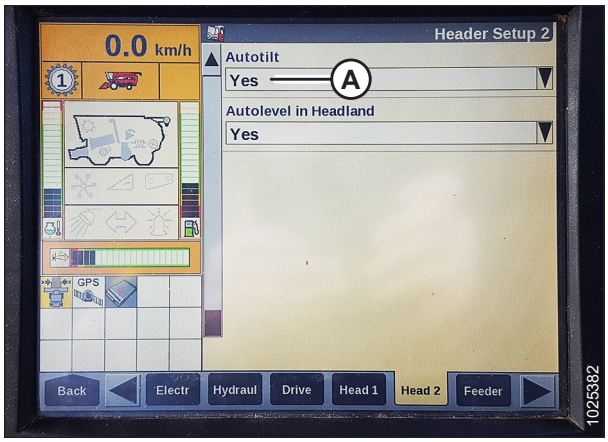

Figure 3.285: Case IH Combine Display

NOTE:

Icons (A) and (B) appear on the monitor only after engaging the separator and header, and then pressing HEADER RESUME button on the control panel.

17. Ensure AUTO HEIGHT icon (A) appears on the monitor and is displayed as shown at location (B). When the header is set for cutting on the ground, this verifies that the combine is correctly using the sensor on the header to sense ground pressure.

NOTE:

AUTO HEIGHT field (B) may appear on any of the RUN tabs and not necessarily on the RUN 1 tab.

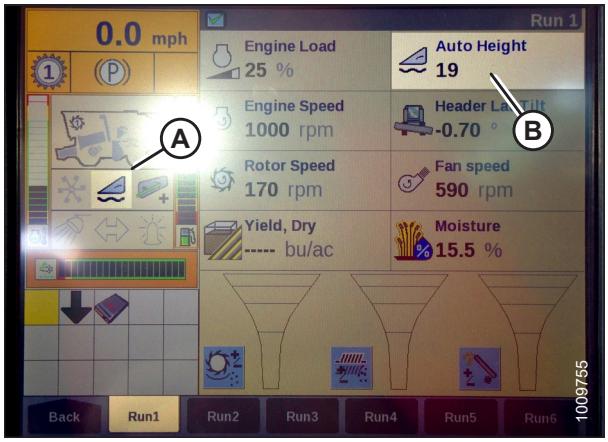

Figure 3.286: Case IH Combine Display

18. Select CALIBRATION on the combine display, and press the right arrow navigation key to enter the information box.
19. Select HEADER (A), and press ENTER. The CALIBRATION dialog box opens.

NOTE:

You can use the up and down navigation keys to move between options.

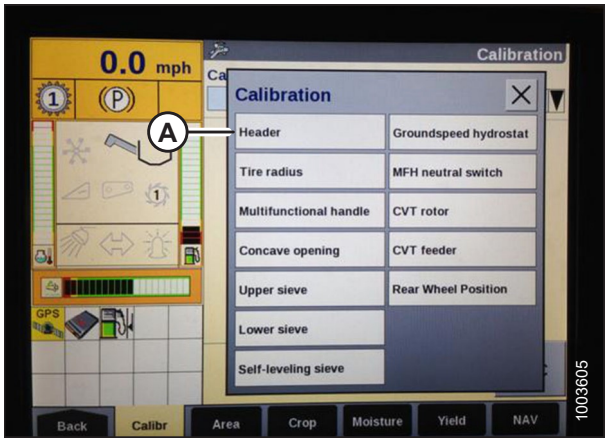

Figure 3.287: Case IH Combine Display

20. Follow the calibration steps in the order in which they appear in the dialog box. As you proceed through the calibration process, the display will automatically update to show the next step.

    NOTE:

    Pressing the ESC key during any of the steps or letting the system sit idle for more than 3 minutes will cause the calibration procedure to stop.

    NOTE:

    Refer to your combine operator's manual for an explanation of any error codes.

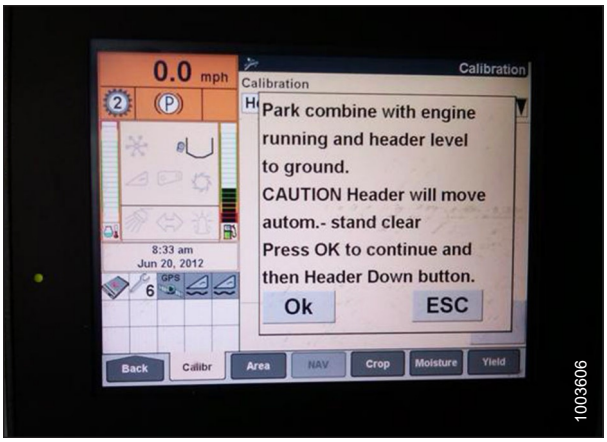

Figure 3.288: Case IH Combine Display

21. When all steps have been completed, CALIBRATION SUCCESSFUL message is displayed on the page. Exit the CALIBRATION menu by pressing the ENTER or ESC key.

    NOTE:

    If float was set heavier to complete the AHHC calibration procedure, adjust to recommended operating float after the calibration is complete.

Checking Reel Height Sensor Voltages – Case IH Combines

WARNING

Clear the area of other persons, pets etc. Keep children away from machinery. Walk around the machine to be sure no one is under, on, or close to it.

NOTE:

Changes may have been made to the combine controls or display since this document was published. Refer to the combine operator's manual for updates.

1. On the main page of the combine display, select DIAGNOSTICS (A). The DIAGNOSTICS page opens.

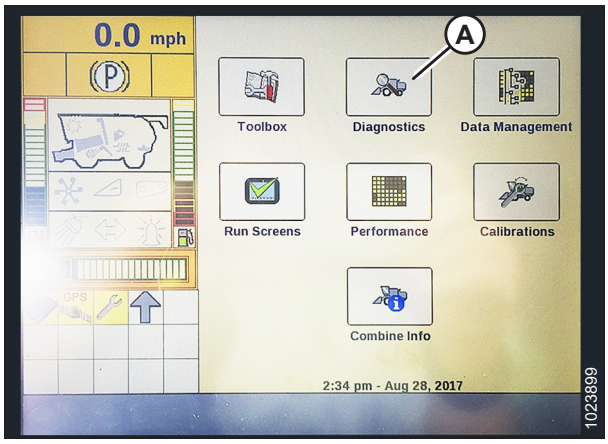

Figure 3.289: Case IH Combine Display

2. Select SETTINGS tab (A). The SETTINGS page opens.
3. From the GROUP menu, select HEADER (B).
4. From the PARAMETER menu, select REEL VERTICAL POSITION (C).

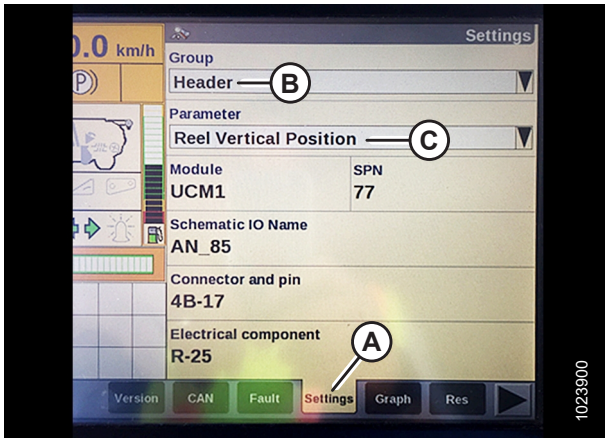

Figure 3.290: Case IH Combine Display

5. Select GRAPH tab (A). The REEL VERTICAL POSITION graph displays.
6. Lower the reel to view high voltage (B). The voltage should be 4.1–4.5 V.
7. Raise the reel to view low voltage (C). The voltage should be 0.5–0.9 V.
8. If either voltage is out of range, refer to *Checking and Adjusting Reel Height Sensor, page 118*.

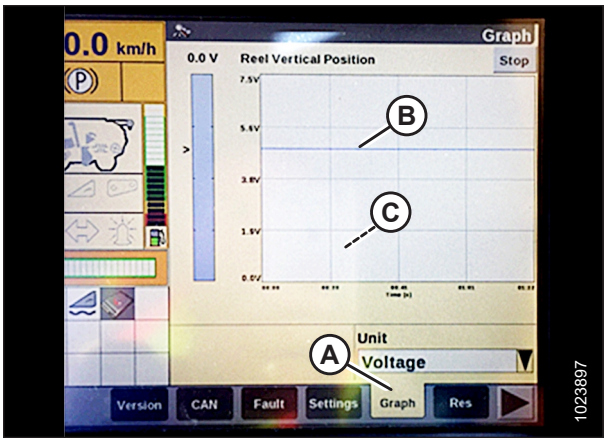

Figure 3.291: Case IH Combine Display

Setting Preset Cutting Height – Case IH 7010/8010, 120, 230, 240, and 250 Series Combines

To set the preset cutting height, follow these steps:

WARNING

Clear the area of other persons, pets etc. Keep children away from machinery. Walk around the machine to be sure no one is under, on, or close to it.

NOTE:

Changes may have been made to the combine controls or display since this document was published. Refer to the combine operator's manual for updates.

NOTE:

Indicator (A) should be at position 0 (B) with the header 152 mm (6 in.) off the ground. If not, the float sensor output voltage should be checked. For instructions, refer to Step *5, page 154*. When the header is on the ground, the indicator should be at position 1 (C) for low ground pressure, and at position 4 (D) for high ground pressure. Crop and soil conditions determine the amount of float to use. The ideal setting is as light as possible without header bouncing or missing crop. Operating with heavy settings prematurely wears the cutterbar wearplates.

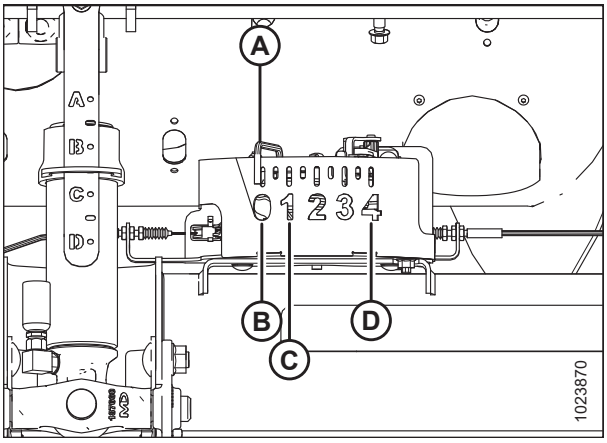

Figure 3.292: Float Indicator Box

1. Engage separator and header.
2. Manually raise or lower header to a desired cutting height.
3. Press SET #1 switch (A). Light (C) beside switch (A) will illuminate.

   NOTE:

   Use switch (E) for fine adjustments.

   NOTE:

   When setting presets, always set header position before setting reel position. If header and reel are set at the same time, the reel setting will not save.
4. Manually raise or lower the reel to the desired position.
5. Press SET #1 switch (A). Light (C) beside switch (A) will illuminate.
6. Manually raise or lower the header to a second desired cutting height.
7. Press SET #2 switch (B). Light (D) beside switch (B) will illuminate.
8. Manually raise or lower the reel to a second desired working position.
9. Press SET #2 switch (B). Light (D) beside switch (B) will illuminate.
10. To swap between set points, press HEADER RESUME (A).
11. To raise header at headlands, press and hold SHIFT button (B) at the back of the control handle and press HEADER RESUME switch (A). To lower header, press HEADER RESUME switch (A) once to return to header preset height.

    NOTE:

    Pressing HEADER RAISE/LOWER switches (C) and (D) disengages AUTO HEIGHT mode. Press HEADER RESUME (A) to re-engage.

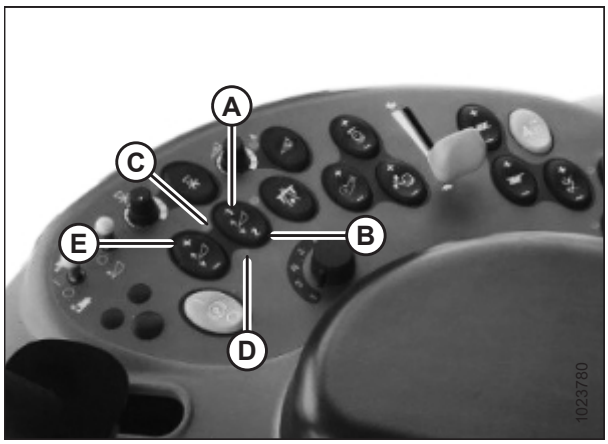

Figure 3.293: Case Combine Controls

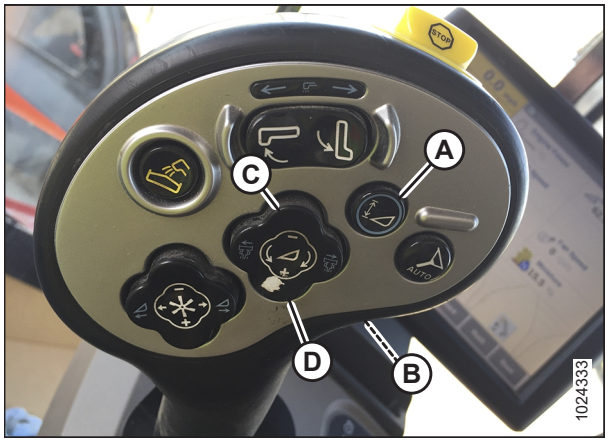

Figure 3.294: Case Combine Controls

3.9.8 Challenger and Massey Ferguson 6 and 7 Series Combines

Checking Voltage Range from the Combine Cab – Challenger and Massey Ferguson

WARNING

Clear the area of other persons, pets etc. Keep children away from machinery. Walk around the machine to be sure no one is under, on, or close to it.

NOTE:

Changes may have been made to the combine controls or display since this document was published. Refer to the combine operator's manual for updates.

1. Position the header 150 mm (6 in.) above the ground, and unlock the float.
2. Check that float lock linkage is on down stops (washer [A] cannot be moved) at both locations.

   NOTE:

   If the header is not on down stops during the next two steps, the voltage may go out of range during operation, causing a malfunction of the auto header height control (AHHC) system. If the header is not on down stops, refer to *3.10 Leveling the Header, page 348* for instructions.

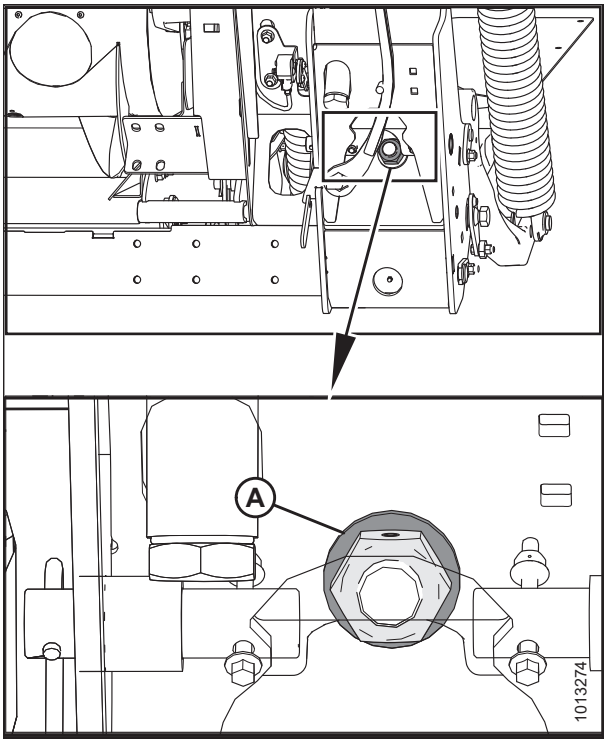

Figure 3.295: Float Lock

3. Adjust cable take-up bracket (B) (if necessary) until float indicator pointer (A) is on **0**.

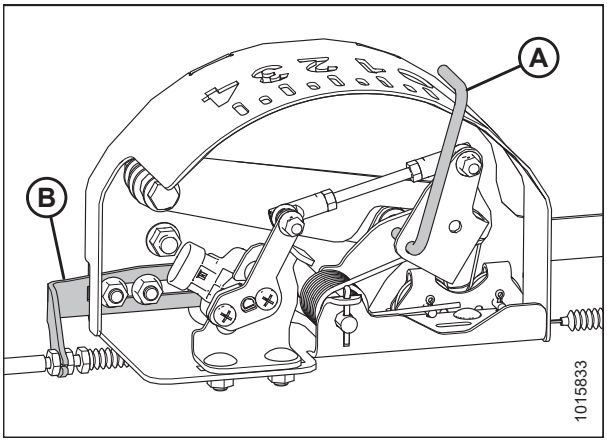

Figure 3.296: Float Indicator Box

4. Go to the FIELD page on the combine monitor, and then press the diagnostics icon. The MISCELLANEOUS page displays.
5. Press VMM DIAGNOSTIC button (A). The VMM DIAGNOSTIC page displays.

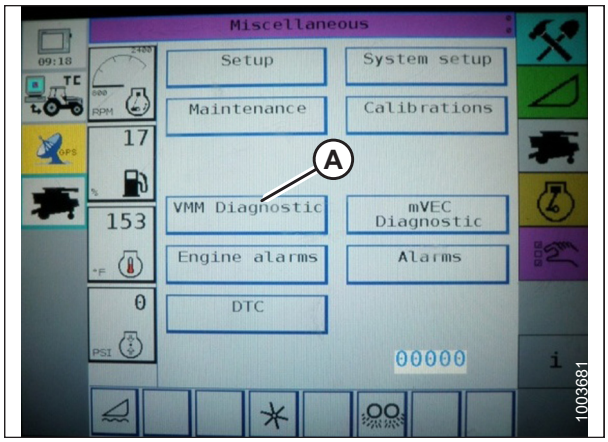

Figure 3.297: Challenger Combine Display

6. Go to ANALOG IN tab (A), and then select VMM MODULE 3 by pressing the text box below the four tabs. The voltage from the AHHC sensor is now displayed on page as HEADER HEIGHT RIGHT POT and HEADER HEIGHT LEFT POT. The readings may be slightly different.

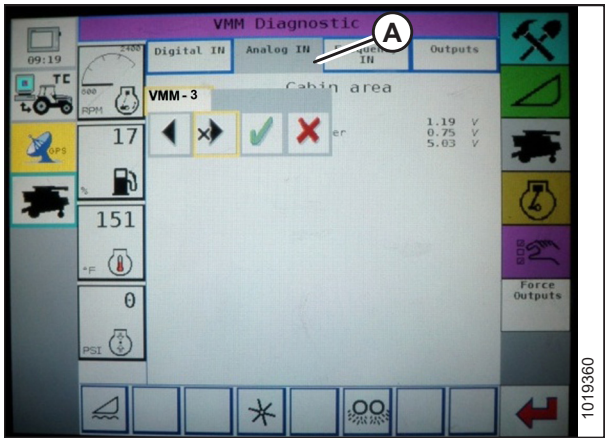

Figure 3.298: Challenger Combine Display

7. Fully lower the combine feeder house (float module should be fully separated from the header).

   NOTE:

   You may need to hold the HEADER DOWN switch for a few seconds to ensure the feeder house is fully lowered.
8. Read voltage.
9. Raise header so cutterbar is 150 mm (6 in.) off the ground.
10. Read voltage.
11. If the sensor voltage is not within the low and high limits, or if the range between the low and high limits is insufficient, adjust the voltage limits. For instructions, refer to *Adjusting Voltage Limits – One-Sensor System, page 159* or *Adjusting Voltage Limits – Two-Sensor System, page 160*.

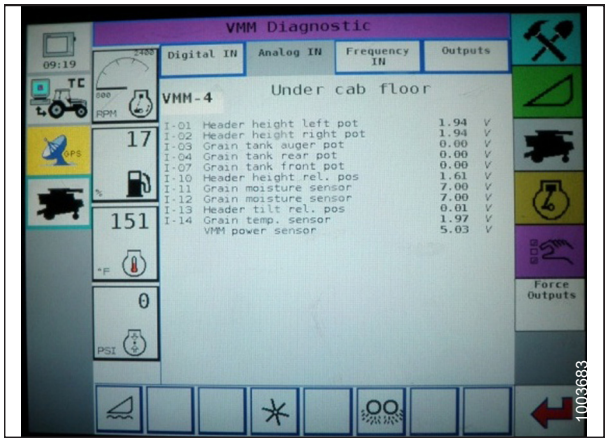

Figure 3.299: Challenger Combine Display

Engaging the Auto Header Height Control – Challenger and Massey Ferguson

NOTE:

Changes may have been made to the combine controls or display since this document was published. Refer to the combine operator's manual for updates.

The following system components are required in order for the auto header height control (AHHC) to work:

- Main module (PCB board) and header driver module (PCB board) mounted in card box in fuse panel module (FP)
- Multifunction control handle operator inputs
- Operator inputs mounted in the control console module (CC) panel

NOTE:

In addition to the above components, the electrohydraulic header lift control valve is an integral part of the system.

Engage the AHHC as follows:

1. Scroll through the header control options on the combine display using the header control switch until AHHC icon (A) is displayed in the first message box. The AHHC will adjust the header height in relation to the ground according to the height setting and sensitivity setting.

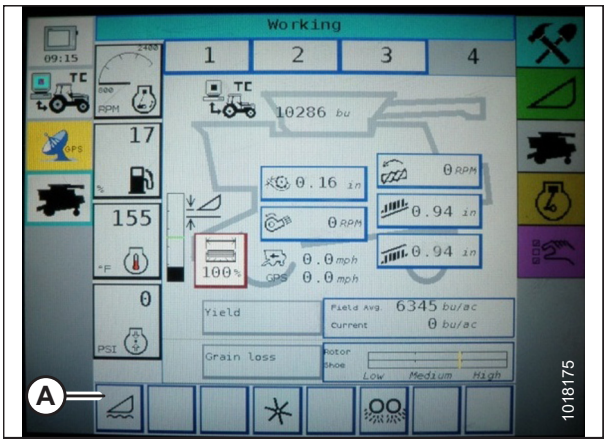

Figure 3.300: Challenger Combine Display

Calibrating the Auto Header Height Control – Challenger and Massey Ferguson

WARNING

Clear the area of other persons, pets etc. Keep children away from machinery. Walk around the machine to be sure no one is under, on, or close to it.

NOTE:

For best performance of the auto header height control (AHHC) system, perform these procedures with the center-link set to **D**. When setup and calibration are complete, adjust the center-link back to desired header angle. For instructions, refer to *3.8.4 Header Angle, page 101*.

NOTE:

Changes may have been made to the combine controls or display since this document was published. Refer to the combine operator's manual for updates.

NOTE:

If the header float is set too light, it can prevent AHHC calibration. You may need to set the float heavier for the calibration procedure so the header doesn't separate from the float module.

1. Ensure center-link is set to **D**.
2. On the FIELD screen, press DIAGNOSTICS icon (A). The MISCELLANEOUS screen appears.

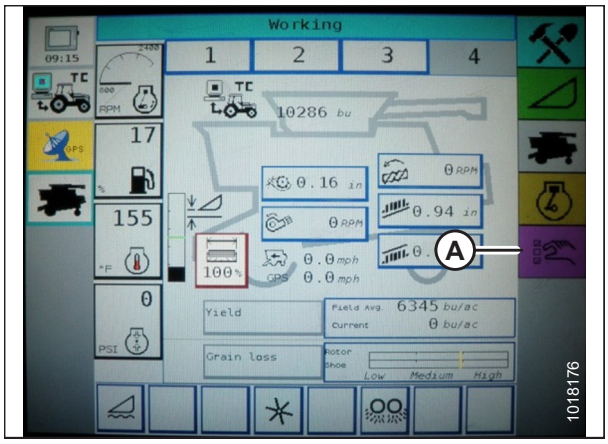

Figure 3.301: Challenger Combine Display

3. Press CALIBRATIONS button (A). The CALIBRATIONS screen appears.

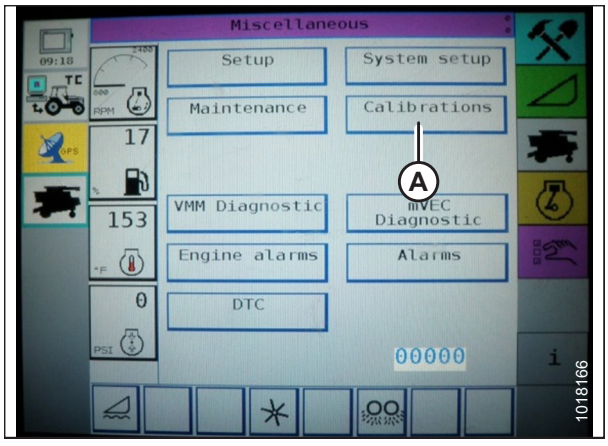

Figure 3.302: Challenger Combine Display

4. Press HEADER button (A). The HEADER CALIBRATION screen displays a warning.

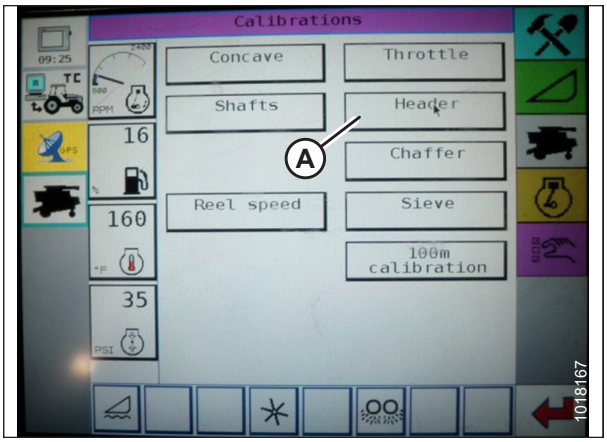

Figure 3.303: Challenger Combine Display

5. Read the warning message, and then press the green check mark button.

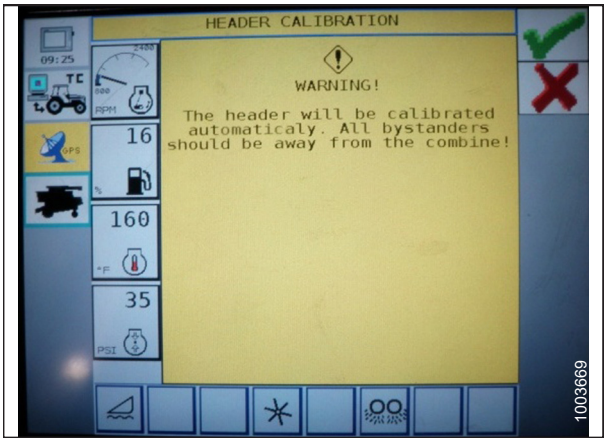

Figure 3.304: Challenger Combine Display

6. Follow the on-screen prompts to complete calibration.

   NOTE:

   The calibration procedure can be canceled at any time by pressing the cancel button in the bottom right corner of the screen. While the header calibration is running, the calibration can also be canceled by using the UP, DOWN, TILT RIGHT, or TILT LEFT buttons on the control handle.

   NOTE:

   If the combine does not have HEADER TILT installed or if it is inoperable, you may receive warnings during calibration. Press the green check mark if these warnings appear. This will not affect the AHHC calibration.

   NOTE:

   If the float was set heavier to complete the AHHC calibration procedure, adjust to the recommended operating float after the calibration is complete.

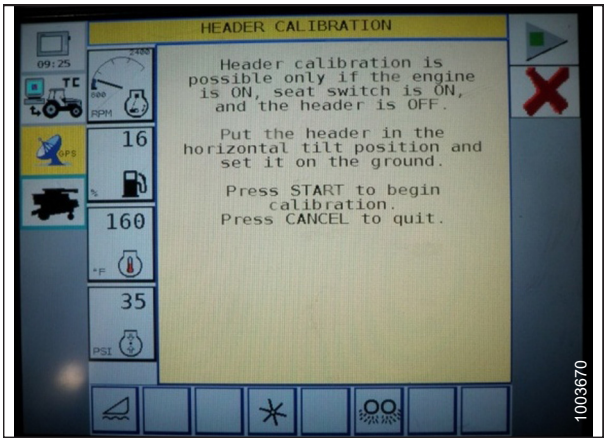

Figure 3.305: Challenger Combine Display

Adjusting the Header Height – Challenger and Massey Ferguson

Once the auto header height control (AHHC) is activated, press and release the HEADER LOWER button on the control handle. The AHHC will automatically lower the header to the selected height setting.

WARNING

Clear the area of other persons, pets etc. Keep children away from machinery. Walk around the machine to be sure no one is under, on, or close to it.

NOTE:

Changes may have been made to the combine controls or display since this document was published. Refer to the combine operator's manual for updates.

You can adjust the selected AHHC height using HEIGHT ADJUSTMENT knob (A) on the control console. Turning the knob clockwise increases the selected height, and turning the knob counterclockwise decreases the selected height.



Figure 3.306: Height Adjustment Knob on the Combine Control Console

Adjusting the Header Raise/Lower Rate – Challenger and Massey Ferguson

NOTE:

Changes may have been made to the combine controls or display since this document was published. Refer to the combine operator's manual for updates.

1. Press Header icon (A) on the FIELD screen. The HEADER screen displays.

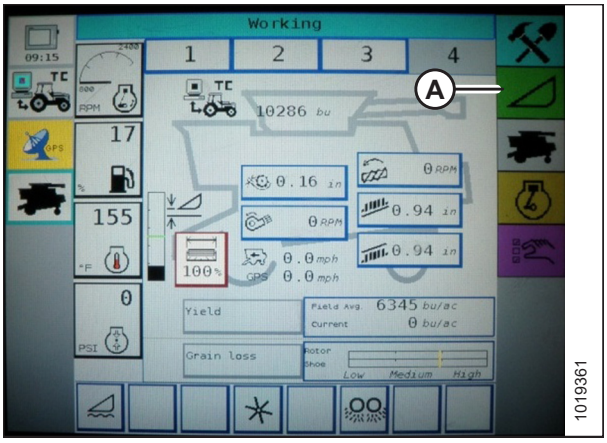

Figure 3.307: Challenger Combine Display

2. Press HEADER CONTROL (A). The HEADER CONTROL screen displays.

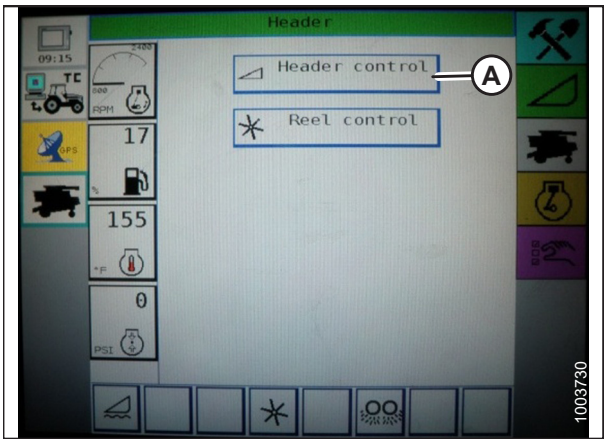

Figure 3.308: Challenger Combine Display

3. Go to the TABLE SETTINGS tab.
4. Press up arrow on MAX UP PWM to increase percentage number and increase raise speed. Press down arrow on MAX UP PWM to decrease percentage number and decrease raise speed.
5. Press up arrow on MAX DOWN PWM to increase percentage number and increase lower speed. Press down arrow on MAX DOWN PWM to decrease percentage number and decrease lower speed.

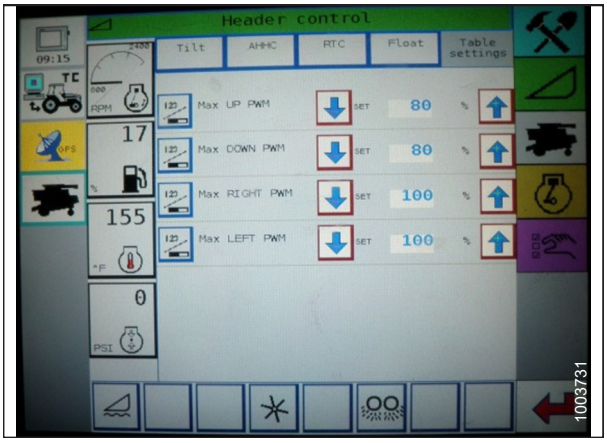

Figure 3.309: Challenger Combine Display

Setting the Sensitivity of the Auto Header Height Control – Challenger and Massey Ferguson

The sensitivity adjustment controls the distance the cutterbar must travel up or down before the auto header height control (AHHC) reacts and raises or lowers the feeder house. When the sensitivity is set to maximum, only small changes in ground height are needed to cause the feeder house to raise or lower. When the sensitivity is set to minimum, large changes in the ground height are needed to cause the feeder house to raise or lower.

WARNING

Clear the area of other persons, pets etc. Keep children away from machinery. Walk around the machine to be sure no one is under, on, or close to it.

NOTE:

Changes may have been made to the combine controls or display since this document was published. Refer to the combine operator's manual for updates.

1. Press the HEADER icon on the FIELD screen. The HEADER screen appears.
2. Press HEADER CONTROL button (A). The HEADER CONTROL screen appears. You can adjust sensitivity on this screen using the up and down arrows.

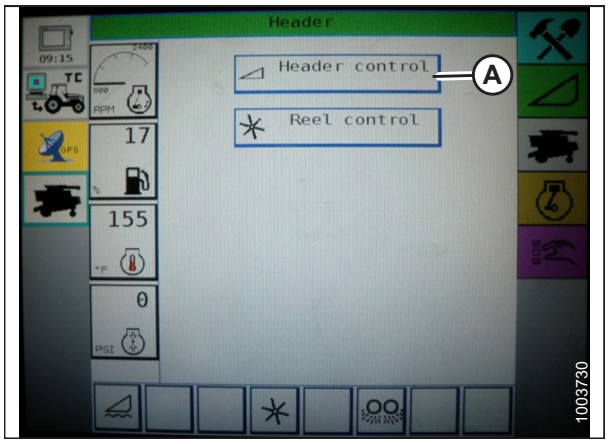

Figure 3.310: Challenger Combine Display

3. Adjust the sensitivity to the maximum setting.
4. Activate the AHHC, and press the HEADER LOWER button on the control handle.
5. Decrease the sensitivity until the feeder house remains steady and does not bounce up and down.

   NOTE:

   This is the maximum sensitivity and is only an initial setting. The final setting must be made in the field, as the system reaction will vary with changing surfaces and operating conditions.

   NOTE:

   If maximum sensitivity is not needed, a less sensitive setting will reduce the frequency of header height corrections and component wear. Partially opening the accumulator valve will cushion the action of the header lift cylinders and reduce header hunting.

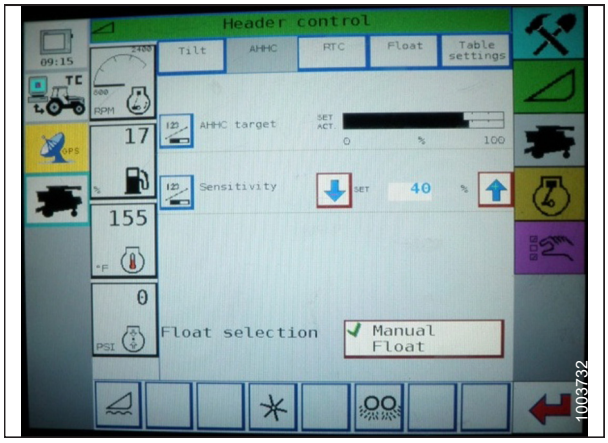

Figure 3.311: Challenger Combine Display

3.9.9 CLAAS 500 Series Combines

Calibrating the Auto Header Height Control – CLAAS 500 Series

For best performance of the auto header height control (AHHC), perform these procedures with the center-link set to **D**. When setup and calibration are complete, adjust the center-link back to desired header angle. For instructions, refer to *3.8.4 Header Angle, page 101*.

NOTE:

Changes may have been made to the combine controls or display since this document was published. Refer to the combine operator's manual for updates.

NOTE:

If header float is set too light, it can prevent calibration of AHHC. You may need to set the float heavier for calibration procedure so header doesn't separate from the float module.

1. Ensure center-link is set to **D**.
2. Use < key (A) or > key (B) to select AUTO HEADER, and press OK key (C). The E5 screen displays whether the automatic header height is on or off.

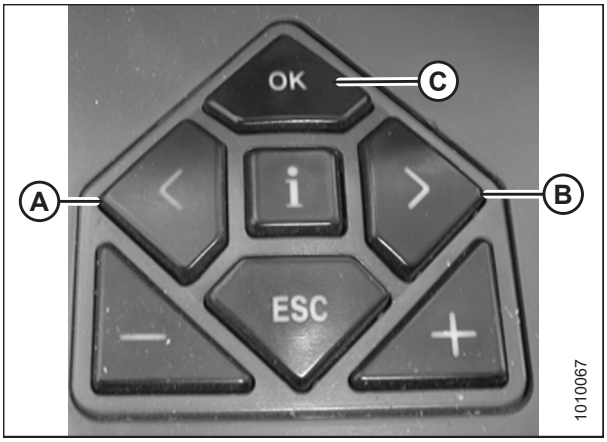

Figure 3.312: CLAAS Combine Controls

3. Use **–** key (A) or **+** key (B) to turn the AHHC on, and press OK key (C).
4. Engage the threshing mechanism and the header.

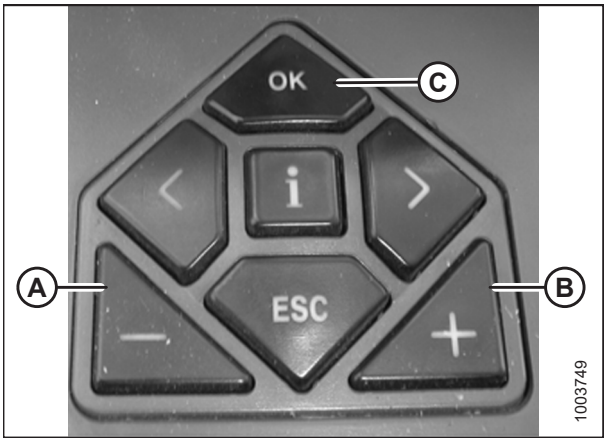

Figure 3.313: CLAAS Combine Controls

5. Use the < or > key to select CUTT. HEIGHT LIMITS, and press the combine controls OK key.
6. Follow the procedure displayed on the screen to program the upper and lower limits of the header into the CEBIS.

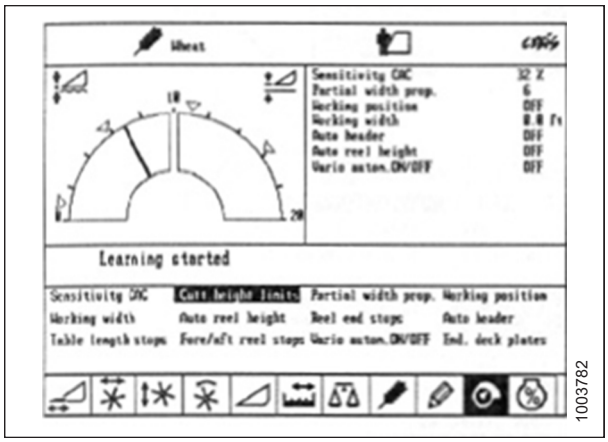

Figure 3.314: CLAAS Combine Display

7. Use the **<** or **>** key to select SENSITIVITY CAC, and press the combine controls OK key.

   NOTE:

   Setting the sensitivity of the AHHC system affects the reaction speed of the AHHC on the header.

8. Use the **–** key or the **+** key to change the setting of the reaction speed, and press the combine controls OK key.

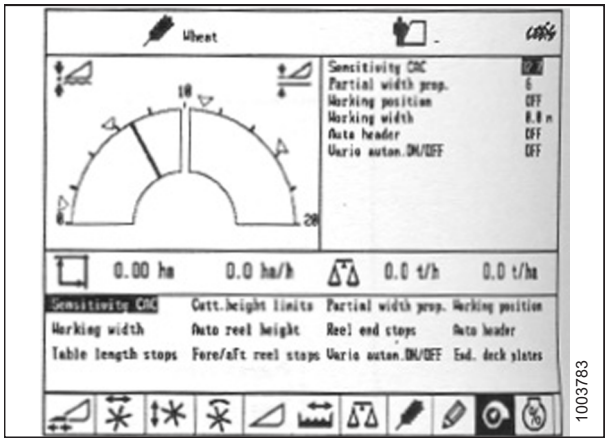

Figure 3.315: CLAAS Combine Display

9. Use line (A) or value (B) to determine the sensitivity setting.

   NOTE:

   The setting can be adjusted from 0–100%. When sensitivity is adjusted to 0%, the signals from the sensing bands have no effect on the automatic cutting height adjustment. When sensitivity is adjusted to 100%, the signals from the sensing bands have maximum effect on the automatic cutting height adjustment. The recommended starting point is 50%.

   NOTE:

   If float was set heavier to complete the AHHC calibration procedure, adjust to recommended operating float after the calibration is complete.

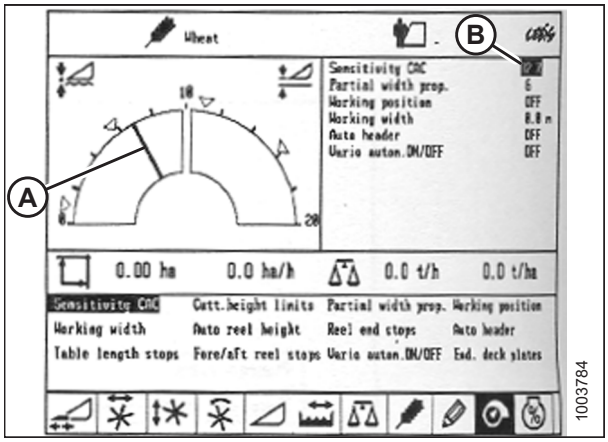

Figure 3.316: CLAAS Combine Display

Setting Cutting Height – CLAAS 500 Series

Cutting heights can be programmed into the preset cutting height and auto contour systems. Use the preset cutting height system for cutting heights above 150 mm (6 in.), and use the auto contour system for cutting heights below 150 mm (6 in.).

Setting Preset Cutting Height – CLAAS 500 Series

WARNING

Check to be sure all bystanders have cleared the area.

NOTE:

Changes may have been made to the combine controls or display since this document was published. Refer to the combine operator's manual for updates.

1. Start the engine.
2. Activate the machine enable switch.
3. Engage the threshing mechanism.
4. Engage the header.
5. Briefly press button (A) in order to activate the auto contour system, or briefly press button (B) in order to activate the preset cutting height system.

   NOTE:

   Button (A) is used only with auto header height control (AHHC) function. Button (B) is used only with the return to cut function.



Figure 3.317: Control Handle Buttons

6. Use < key (C) or > key (D) to select the CUTTING HEIGHT screen, and press OK key (E).
7. Use – key (A) or + key (B) to set the desired cutting height. An arrow indicates the selected cutting height on the scale.

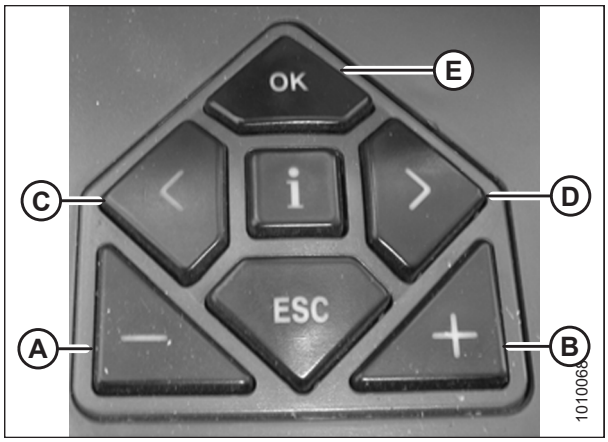

Figure 3.318: CLAAS Combine Controls

8. Briefly press button (A) or button (B) in order to select the set point.
9. Repeat Step *7, page 218* for the set point.



Figure 3.319: Control Handle Buttons

Setting Cutting Height Manually – CLAAS 500 Series

WARNING

Check to be sure all bystanders have cleared the area.

NOTE:

Changes may have been made to the combine controls or display since this document was published. Refer to the combine operator's manual for updates.

1. Use button (A) to raise the header, or button (B) to lower the header to the desired cutting height.
2. Press and hold button (C) for 3 seconds to store the cutting height into the CEBIS (an alarm will sound when the new setting has been stored).
3. Program a second set point, if desired, by using button (A) to raise the header, or button (B) to lower the header to the desired cutting height, and briefly press button (C) to store the second set point into the CEBIS (an alarm will sound when the new setting has been stored).

   NOTE:

   For above-the-ground cutting, repeat Step *1, page 219*, and use button (D) instead of button (C) while repeating Step *2, page 219*.



Figure 3.320: Control Handle Buttons

Setting the Sensitivity of the Auto Header Height Control – CLAAS 500 Series

The sensitivity adjustment controls the distance the cutterbar must travel up or down before the auto header height control (AHHC) reacts and raises or lowers the feeder house. When the sensitivity is set to maximum, only small changes in ground height are needed to cause the feeder house to raise or lower. When the sensitivity is set to minimum, large changes in the ground height are needed to cause the feeder house to raise or lower.

NOTE:

The upper and lower limits of the header must be programmed into the CEBIS before adjusting the sensitivity of the AHHC system. The setting can be adjusted from 0–100%. When sensitivity is adjusted to 0%, the signals from the sensing bands have no effect on the automatic cutting height adjustment. When sensitivity is adjusted to 100%, the signals from the sensing bands have maximum effect on the automatic cutting height adjustment. The recommended starting point is 50%.

NOTE:

Changes may have been made to the combine controls or display since this document was published. Refer to the combine operator's manual for updates.

1. Use **<** key (C) or **>** key (D) to select SENSITIVITY CAC, and press OK key (E).
2. Use **–** key (A) or **+** (B) key to change the reaction speed setting, and press OK key (E).

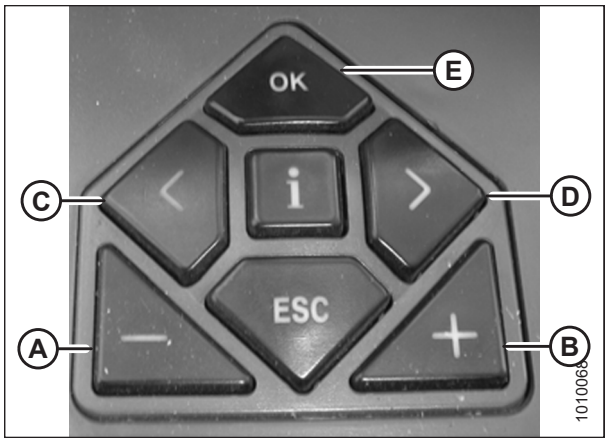

Figure 3.321: CLAAS Combine Controls

3. Use line (A) or value (B) to determine the sensitivity setting.

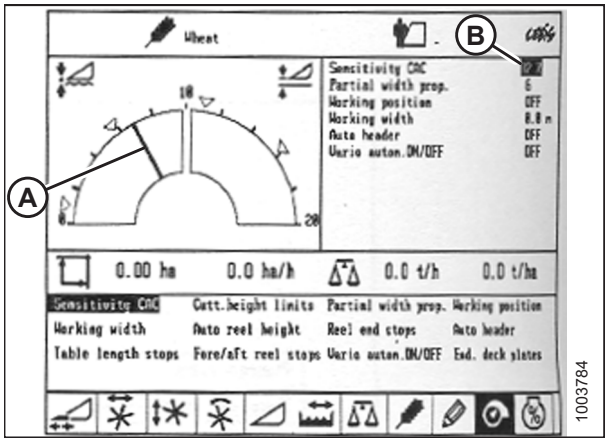

Figure 3.322: CLAAS Combine Display

Figure 3.323: Flow Chart for Setting the Sensitivity of the Float Optimizer

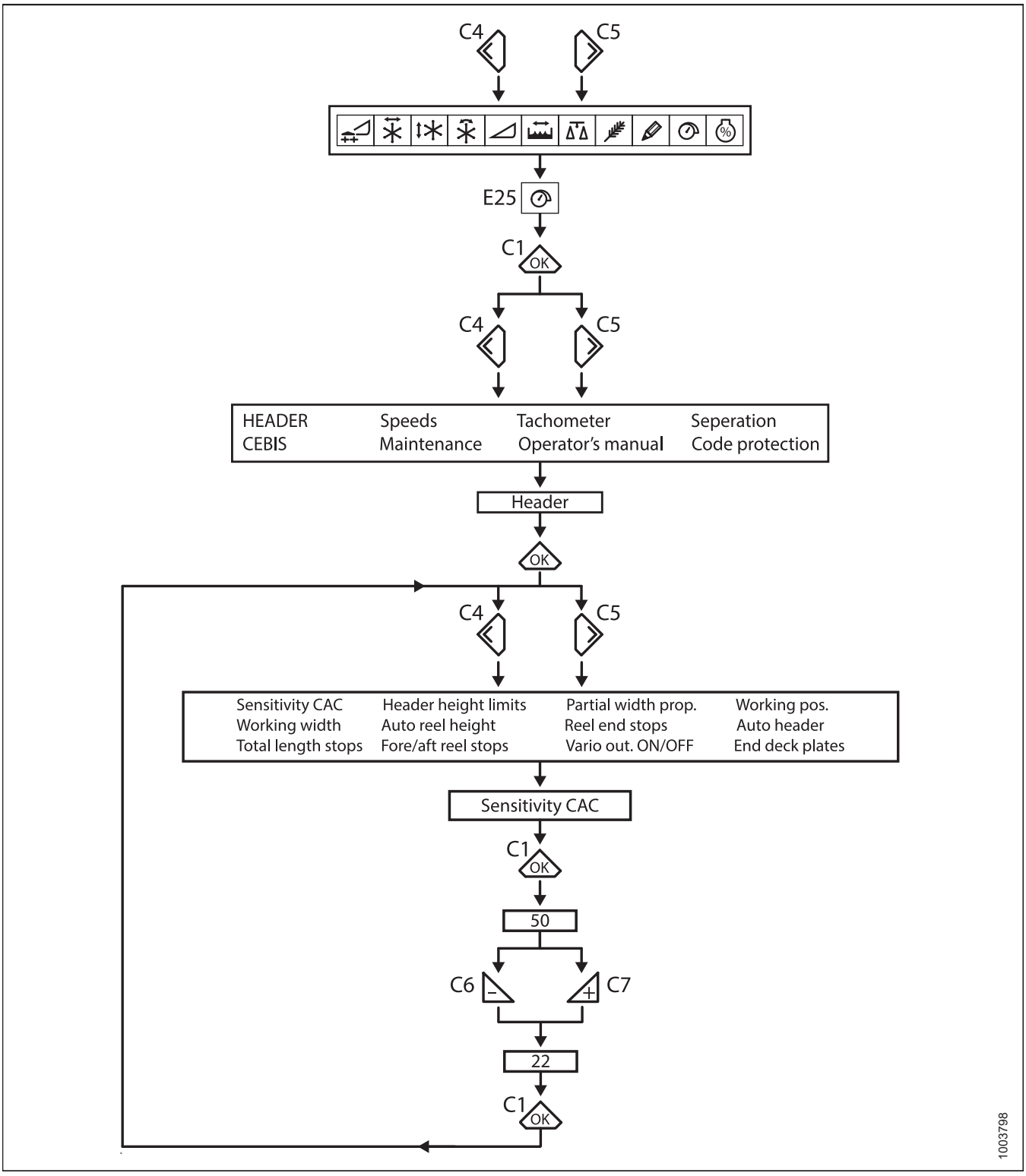

Adjusting Auto Reel Speed – CLAAS 500 Series

The preset reel speed can be set when the automatic header functions are activated.

NOTE:

Changes may have been made to the combine controls or display since this document was published. Refer to the combine operator's manual for updates.

1. Use the **<** or **>** key to select REEL WINDOW. Window E15 will display the current advance or retard speed of the reel in relation to the ground speed.

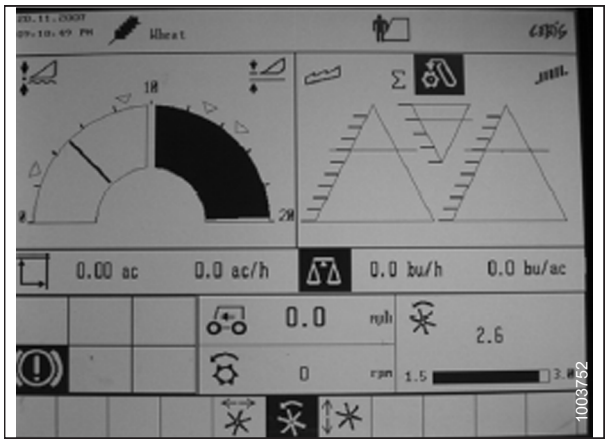

Figure 3.324: CLAAS Combine Display

2. Press OK key (C) to open the REEL SPEED window.
3. Use **–** key (A) or **+** key (B) to set the reel speed in relation to the current ground speed. Window E15 will display the selected reel speed.

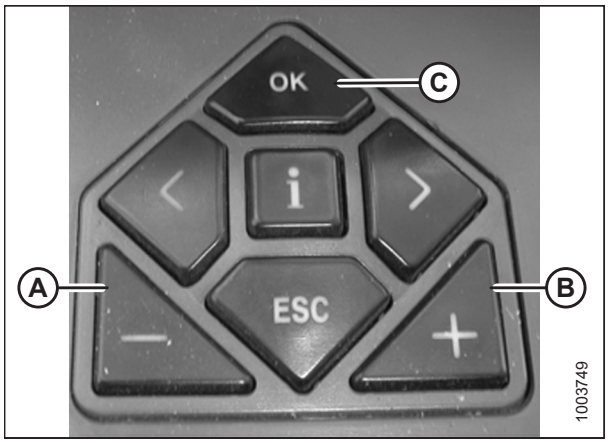

Figure 3.325: CLAAS Combine Controls

4. Manually adjust the reel speed by rotating the rotary switch to reel position (A), and then use the **–** or **+** key to set the reel speed.



Figure 3.326: CLAAS Combine Rotary Switch

5. Press and hold button (A) or button (B) for 3 seconds to store the setting into the CEBIS (an alarm will sound when the new setting has been stored).

   NOTE:

   Whenever button (A) or button (B) is pressed for 3 seconds, the current positions for reel speed and cutting height are stored.



Figure 3.327: CLAAS Control Handle Buttons

6. Use the **<** or **>** key to select the REEL WINDOW. Window E15 will display the current advance or retard speed of the reel in relation to the ground speed.

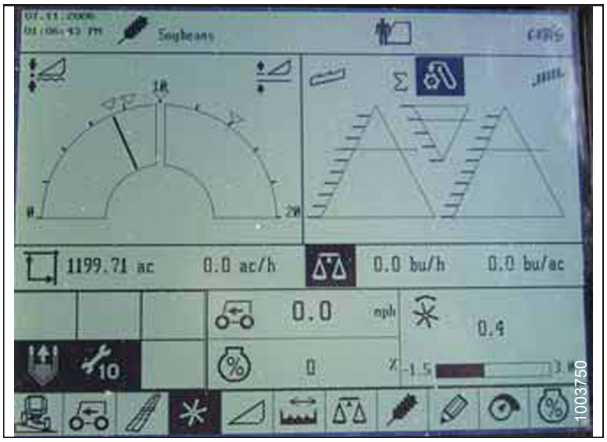

Figure 3.328: CLAAS Combine Display

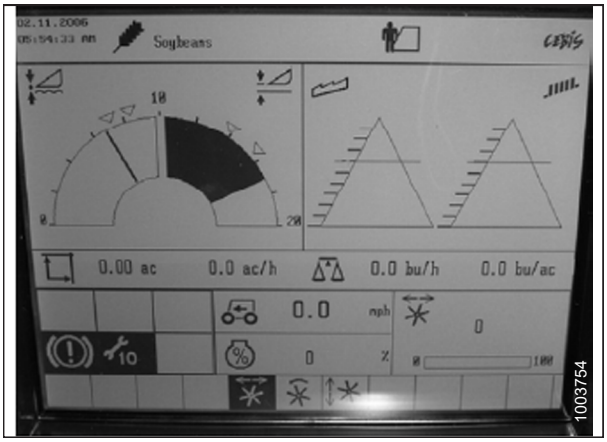

Figure 3.329: CLAAS Combine Display

7. Press OK key (E), and use < key (C) or > key (D) to select the REEL FORE AND AFT window.
8. Use **–** key (A) or **+** key (B) to set the reel fore-aft position.

   NOTE:

   Control handle button (A) or button (B) (as shown in Figure *3.331, page 224*) can also be used to set the reel fore-aft position.

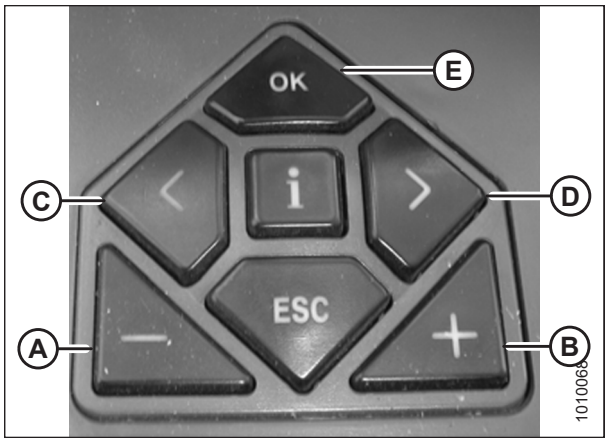

Figure 3.330: CLAAS Combine Controls

9. Press and hold button (A) or button (B) for 3 seconds to store the setting into the CEBIS (an alarm will sound when the new setting has been stored).

   NOTE:

   Whenever button (A) or button (B) is pressed for 3 seconds, the current positions for reel speed and cutting height are stored.



Figure 3.331: CLAAS Control Handle Buttons

3.9.10 CLAAS 600 and 700 Series Combines

Calibrating the Auto Header Height Control – CLAAS 600 and 700 Series

For best performance of the auto header height control (AHHC), perform these procedures with the center-link set to **D**. When setup and calibration are complete, adjust the center-link back to desired header angle. For instructions, refer to *3.8.4 Header Angle, page 101*.

NOTE:

Changes may have been made to the combine controls or display since this document was published. Refer to the combine operator's manual for updates.

NOTE:

If header float is set too light, it can prevent AHHC calibration. You may need to set the float heavier for calibration procedure so header doesn't separate from the float module.

1. Ensure center-link is set to **D**.
2. Ensure that the header float is unlocked.
3. Use control knob (A) to highlight AUTO CONTOUR icon (B) and press control knob (A) to select it.

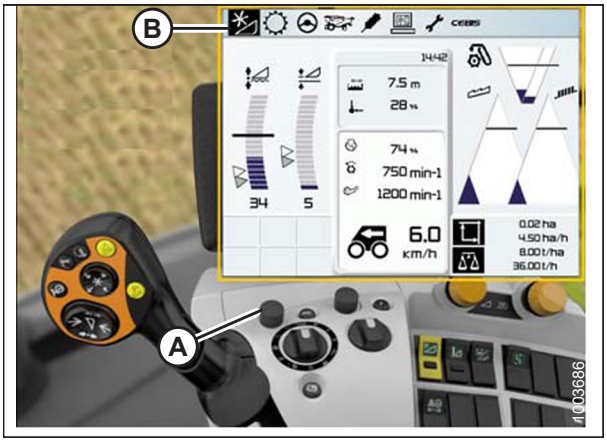

Figure 3.332: CLAAS Combine Display, Console, and Control Handle

4. Use control knob (A) to highlight the icon that resembles a header with up and down arrows (not shown), and press control knob (A) to select it. Highlighted header icon (B) will be displayed on the screen.



Figure 3.333: CLAAS Combine Display, Console, and Control Handle

5. Use control knob (A) to highlight the icon that resembles a header with up and down arrows (B), and press control knob (A) to select it.

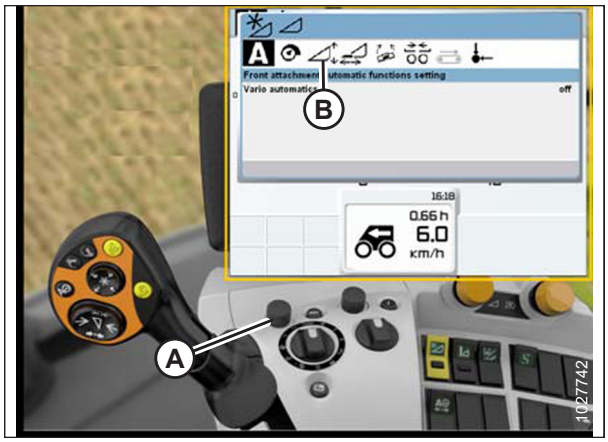

Figure 3.334: CLAAS Combine Display, Console, and Control Handle

6. Use control knob (A) to highlight the icon that resembles a screwdriver (B).
7. Engage the combine separator and feeder house.
8. Press control knob (A) and a progress bar will appear.



Figure 3.335: CLAAS Combine Display, Console, and Control Handle

9. Fully raise the feeder house. Progress bar (A) will advance to 25%.
10. Fully lower the feeder house. Progress bar (A) will advance to 50%.
11. Fully raise the feeder house. Progress bar (A) will advance to 75%.
12. Fully lower the feeder house. Progress bar (A) will advance to 100%.

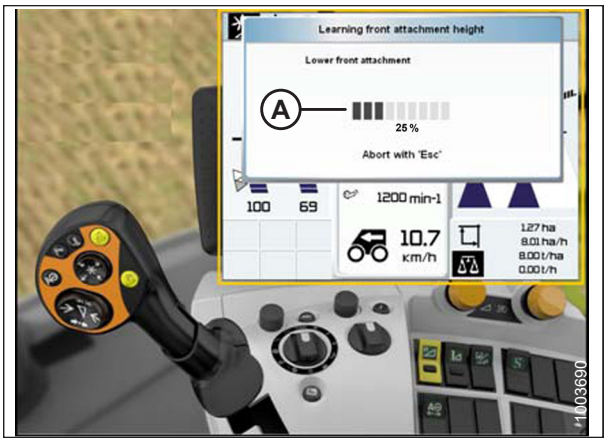

Figure 3.336: CLAAS Combine Display, Console, and Control Handle

13. Ensure progress bar (A) displays 100%. The calibration procedure is now complete.

    NOTE:

    If the voltage is not within the range of 0.5–4.5 V at any time throughout the calibration process, the monitor will indicate learning procedure not concluded.

    NOTE:

    If float was set heavier to complete ground calibration procedure, adjust to recommended operating float after the calibration is complete.



Figure 3.337: CLAAS Combine Display, Console, and Control Handle

Setting Cutting Height – CLAAS 600 and 700 Series

WARNING

Check to be sure all bystanders have cleared the area.

NOTE:

Changes may have been made to the combine controls or display since this document was published. Refer to the combine operator's manual for updates.

1. Lower the header to desired cutting height or ground pressure setting. The float indicator box should be set to 1.5.
2. Hold the left side of header raise and lower switch (A) until you hear a ping.

   NOTE:

   You can set two different cutting heights.



Figure 3.338: CLAAS Combine Display, Console, and Control Handle

Setting the Sensitivity of the Auto Header Height Control – CLAAS 600 and 700 Series

The sensitivity adjustment controls the distance the cutterbar must travel up or down before the auto header height control (AHHC) reacts and raises or lowers the feeder house. When the sensitivity is set to maximum, only small changes in ground height are needed to cause the feeder house to raise or lower. When the sensitivity is set to minimum, large changes in the ground height are needed to cause the feeder house to raise or lower.

NOTE:

Changes may have been made to the combine controls or display since this document was published. Refer to the combine operator's manual for updates.

1. Use control knob (A) to highlight HEADER/REEL icon (B), and press control knob (A) to select it. The HEADER/REEL dialog box opens.
2. Select HEADER icon.

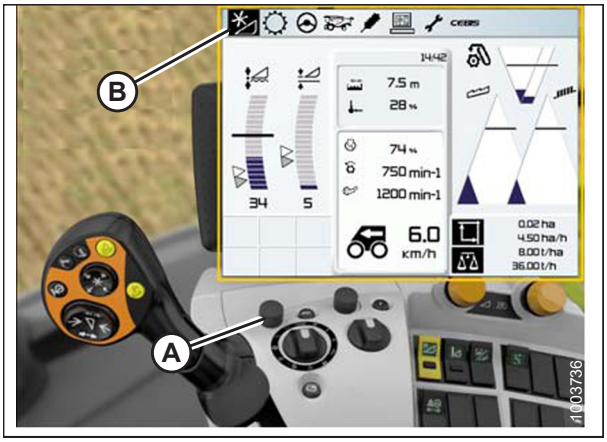

Figure 3.339: CLAAS Combine Display, Console, and Control Handle

3. Select FRONT ATTACHMENT PARAMETER SETTINGS icon (A). A list of settings appears.
4. Select SENSITIVITY CAC (B) from the list.



Figure 3.340: CLAAS Combine Display, Console, and Control Handle

5. Select SENSITIVITY CAC icon (A).

   NOTE:

   To set the sensitivity, you will have to change CUTTING HEIGHT ADJUSTMENT (B) from the 0 default. The settings from 1–50 provide a faster response, whereas the settings from -1 to -50 provide a slower response. For best results, make adjustments in increments of 5.

6. Increase the CUTTING HEIGHT ADJUSTMENT setting if the reaction time between the header and the float module is too slow while cutting on the ground, and decrease the CUTTING HEIGHT ADJUSTMENT setting if the reaction time between the header and the float module is too fast.

7. Increase the sensitivity if the header is lowered too slowly, and decrease the sensitivity if the header hits the ground too hard or is lowered too quickly.



Figure 3.341: CLAAS Combine Display

Adjusting Auto Reel Speed – CLAAS 600 and 700 Series

NOTE:

Changes may have been made to the combine controls or display since this document was published. Refer to the combine operator's manual for updates.

1. Use control knob (A) to highlight HEADER/REEL icon (B), and press control knob (A) to select it. The HEADER/REEL dialog box opens.

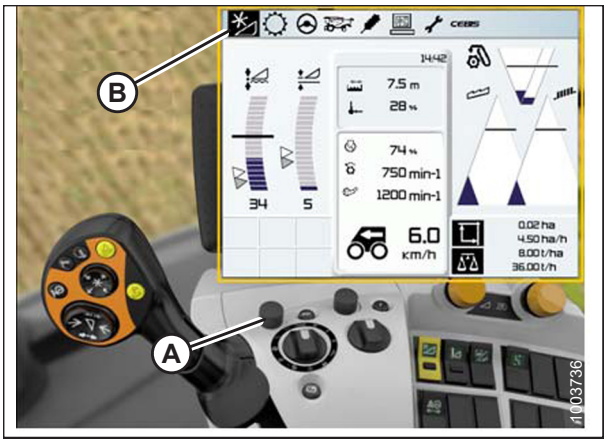

Figure 3.342: CLAAS Combine Display, Console, and Control Handle

2. Use control knob (A) to select REEL SPEED (B), and adjust the reel speed (if you are **NOT** using Auto Reel Speed). A graph displays in the dialog box.



Figure 3.343: CLAAS Combine Display, Console, and Control Handle

3. Select ACTUAL VALUE (A) from the AUTO REEL SPEED dialog box (if you are using Auto Reel Speed). The ACTUAL VALUE dialog box indicates the auto reel speed.



Figure 3.344: CLAAS Combine Display, Console, and Control Handle

4. Use control knob (A) to raise or lower the reel speed.

   NOTE:

   This option is only available at full throttle.



Figure 3.345: CLAAS Combine Display, Console, and Control Handle

Calibrating Reel Height Sensor – CLAAS 600 and 700 Series

NOTE:

Changes may have been made to the combine controls or display since this document was published. Refer to the combine operator's manual for updates.

To calibrate reel height, follow these steps:

1. Place header off the ground 15–25 cm (6–10 in.).

   IMPORTANT:

   Do **NOT** turn off the engine. The combine has to be at full idle for the sensors to calibrate properly.

2. Use control knob (A) to highlight FRONT ATTACHMENT icon (B) and press control knob (A) to select it.

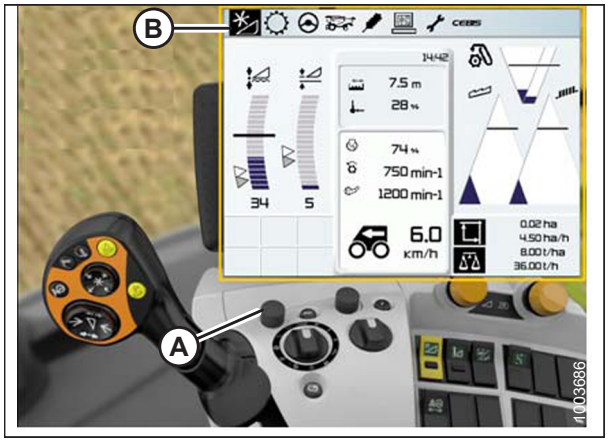

Figure 3.346: CLAAS Combine Display, Console, and Control Handle

3. Use control knob (A) to highlight REEL icon (B), and press control knob (A) to select it.

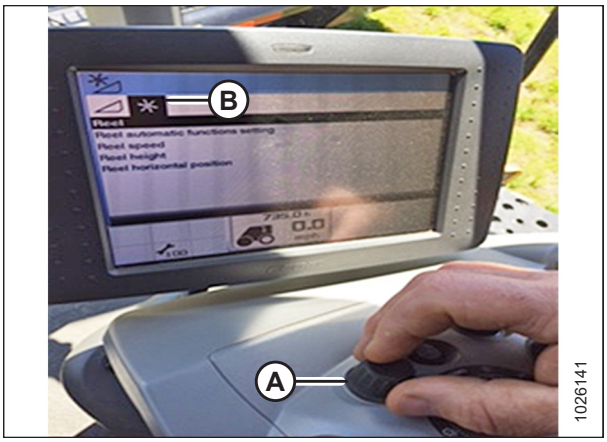

Figure 3.347: CLAAS Combine Display and Console

4. Highlight REEL HEIGHT icon (A), and press control knob to select it.
5. Select LEARNING END STOPS (B) from the list.



Figure 3.348: CLAAS Combine Display and Console

6. Use control knob (A) to highlight screwdriver icon (B).



Figure 3.349: CLAAS Combine Display, Console, and Control Handle

7. Press control knob and a progress bar chart (A) will appear.
8. Follow the prompts on the screen to raise the reel.
9. Follow the prompts on the screen to lower the reel.



Figure 3.350: CLAAS Combine Display, Console, and Control Handle

10. Ensure progress bar chart displays 100% (A). The calibration procedure is now complete.

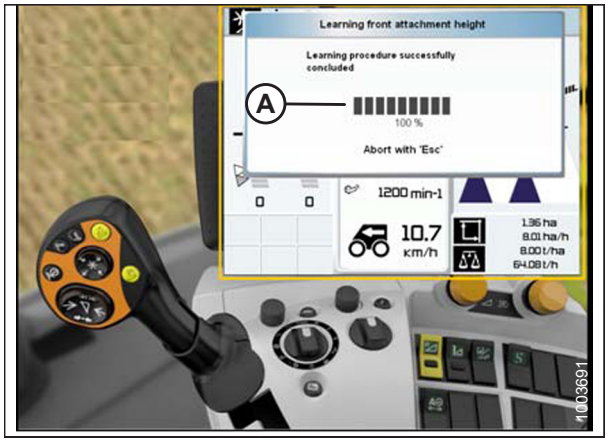

Figure 3.351: CLAAS Combine Display, Console, and Control Handle

Adjusting Auto Reel Height – CLAAS 600 and 700 Series

NOTE:

Changes may have been made to the combine controls or display since this document was published. Refer to the combine operator's manual for updates.

To adjust the auto reel height, follow these steps:

1. Use HOTKEY rotary dial (A) to select REEL icon (B).

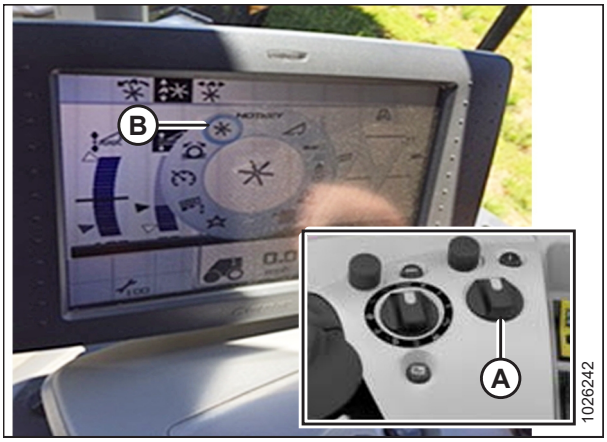

Figure 3.352: CLAAS Combine Display and Console

2. Use control knob (A) to select AUTO REEL HEIGHT icon (B) at the top of the page.

   NOTE:

   AUTO REEL HEIGHT icon (C) at the center of the page should be highlighted black. If it is not black, either the end stops have not been set or the AHHC is not active. For instructions, refer to *Calibrating Reel Height Sensor – CLAAS 600 and 700 Series, page 232*.

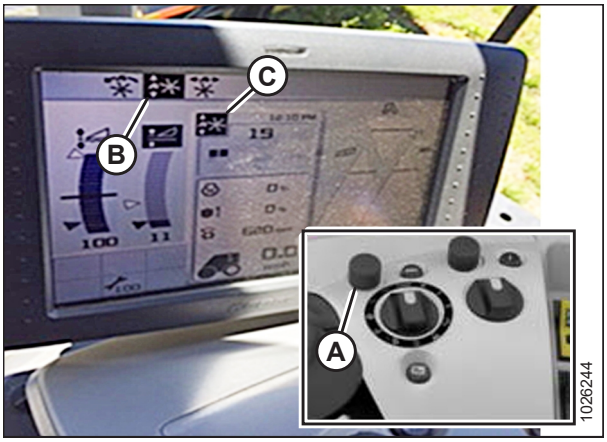

Figure 3.353: CLAAS Combine Display and Console

3. Adjust the auto reel height position for the current AHHC position using outer scroll knob (A). To lower the preset reel position, turn the scroll knob counterclockwise; to raise the preset reel position, turn the scroll knob clockwise. The display will update current setting (B).

   NOTE:

   If the AUTO REEL HEIGHT icon in the center of the page is not black, an AHHC position is not currently active.

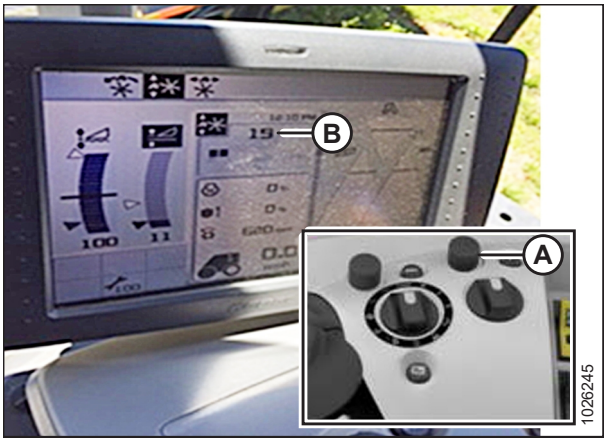

Figure 3.354: CLAAS Combine Display and Console

3.9.11 CLAAS 8000/7000 Series Combines

Setting up the Header – CLAAS 8000/7000 Series

Follow these steps to setup a MacDon header:

WARNING

Clear the area of other persons, pets etc. Keep children away from machinery. Walk around the machine to be sure no one is under, on, or close to it.

NOTE:

Changes may have been made to the combine controls or display since this document was published. Refer to the combine operator's manual for updates.

1. From the main page, select FRONT ATTACHMENT (A).



Figure 3.355: CEBIS Main Page

2. From the drop down list, select FRONT ATTACHMENT PARAMETERS (A).

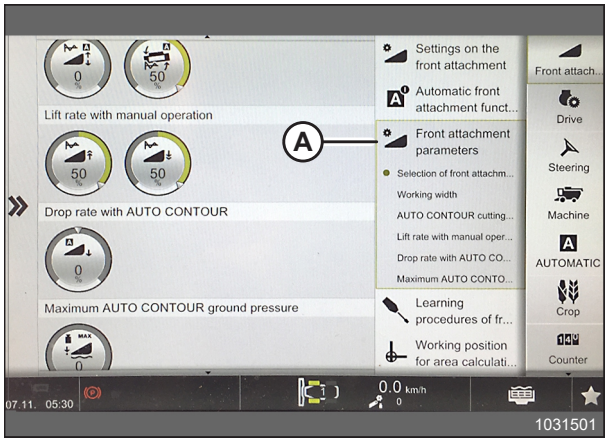

Figure 3.356: Front Attachment Page

3. From the Front Attachment Parameters page, select FRONT ATTACHMENT TYPE (A).
4. From the drop down list, select FLEX CUTTERBAR PRODUCT BY OTHER MANUFACTURER (B).

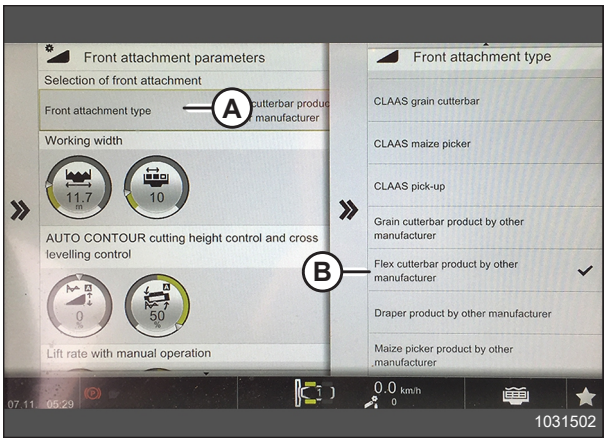

Figure 3.357: Attachment Parameters Page

5. From the Front Attachment Parameters page, select WORKING WIDTH (A).
6. Set header width by sliding adjuster arrow (B) up or down.
7. Select check mark (C) to save settings.

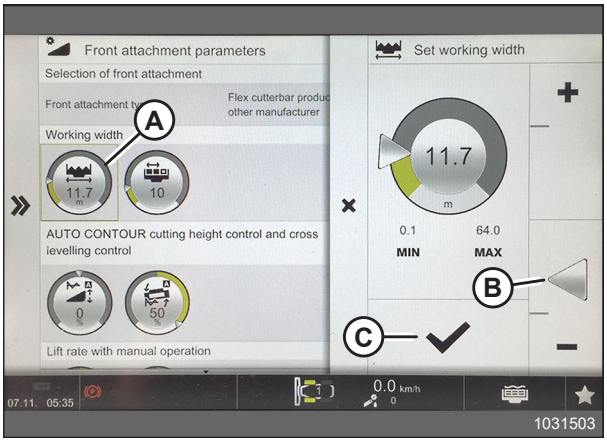

Figure 3.358: Attachment Parameters Page

Calibrating the Auto Header Height Control – CLAAS 8000/7000 Series

WARNING

Clear the area of other persons, pets etc. Keep children away from machinery. Walk around the machine to be sure no one is under, on, or close to it.

NOTE:

Changes may have been made to the combine controls or display since this document was published. Refer to the combine operator's manual for updates.

1. From the main page, select FRONT ATTACHMENT (A).



Figure 3.359: CEBIS Main Page

2. Select LEARNING PROCEDURES (A) from the menu.
3. SELECT FRONT ATTACHMENT HEIGHT (B).

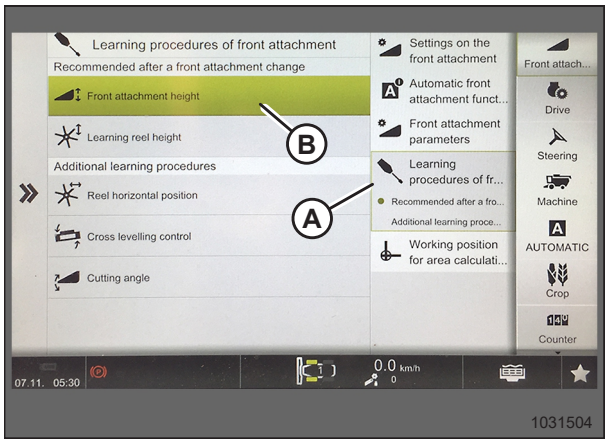

Figure 3.360: Learning Procedures Page

4. Follow the prompts that appear in Description and Notes fields (A).

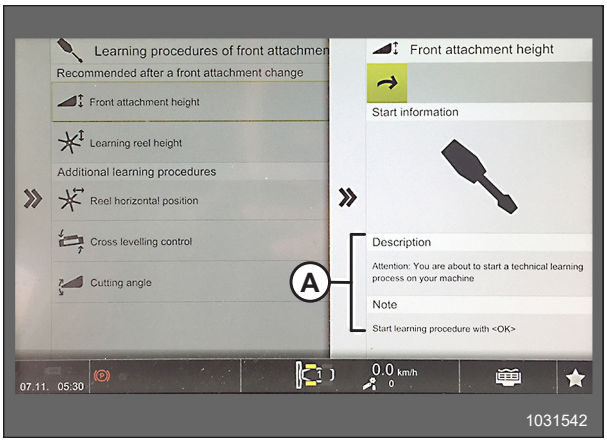

Figure 3.361: Front Attachment Height Page

5. When prompted, select OK button (A) to start the learning procedure.

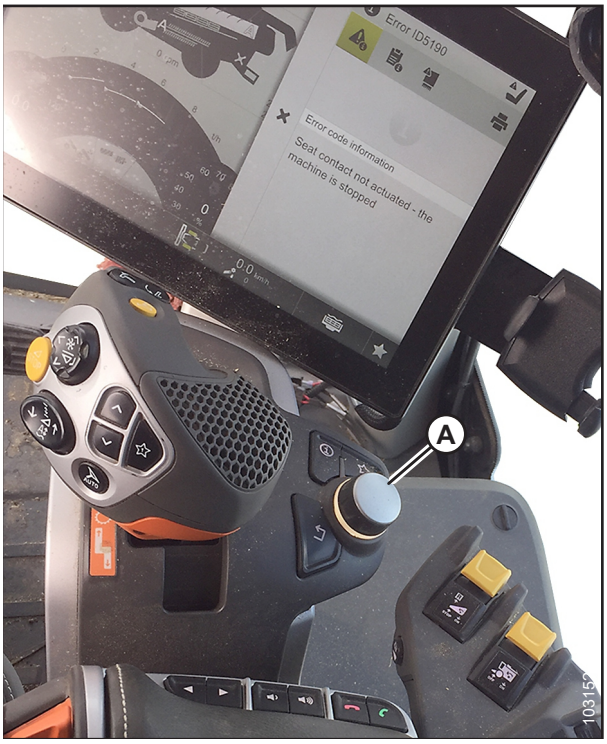

Figure 3.362: Operator Controls

6. When prompted, raise front attachment with button (A) on the multifunction lever.
7. When prompted, lower front attachment with button (B) on multifunction lever.
8. Repeat as prompted until calibration is complete.

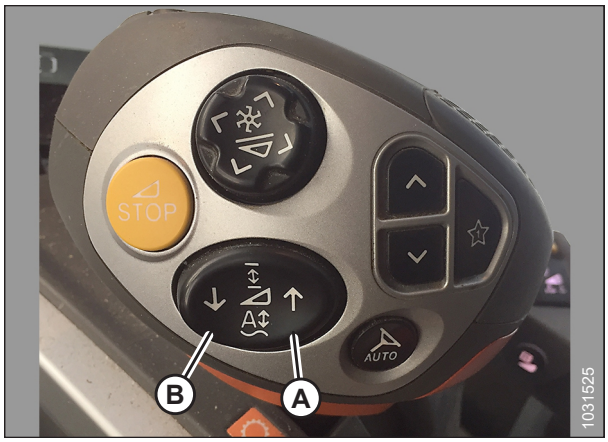

Figure 3.363: Multifunction Lever

Setting Cut and Reel Height Preset – CLAAS 8000/7000 Series

WARNING

Clear the area of other persons, pets etc. Keep children away from machinery. Walk around the machine to be sure no one is under, on, or close to it.

NOTE:

Changes may have been made to the combine controls or display since this document was published. Refer to the combine operator's manual for updates.

1. Set desired cutting height with feederhouse raise/lower buttons (A) on the multifunction lever.
2. Set desired reel position with buttons (B).
3. Press and hold AUTO HEIGHT PRESET button (C) to store settings.

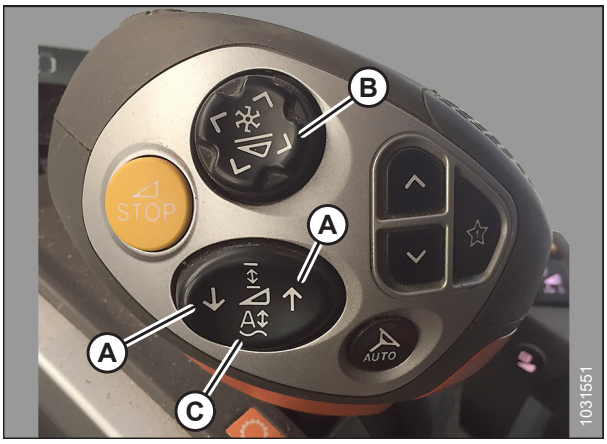

Figure 3.364: Multifunction Lever

A triangle (A) appears on the header height gauge indicating the preset level.



Figure 3.365: CEBIS Main Page

Setting the Sensitivity of the Auto Header Height Control – CLAAS 8000/7000 Series

WARNING

Clear the area of other persons, pets etc. Keep children away from machinery. Walk around the machine to be sure no one is under, on, or close to it.

NOTE:

Changes may have been made to the combine controls or display since this document was published. Refer to the combine operator's manual for updates.

1. From the main page, select FRONT ATTACHMENT (A).



Figure 3.366: CEBIS Main Page

2. From the drop down list, select FRONT ATTACHMENT PARAMETERS (A).

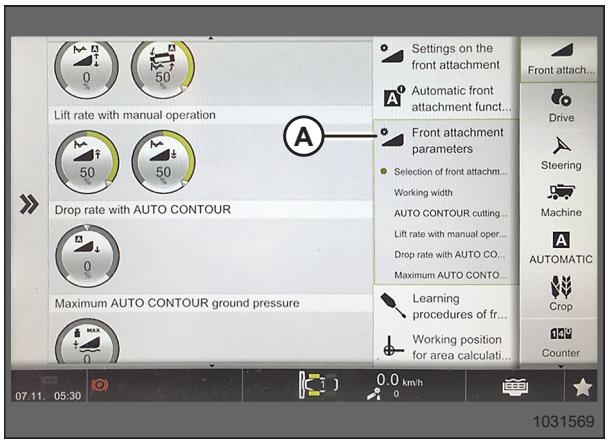

Figure 3.367: Front Attachment Parameters Page

3. Scroll through the list and select DROP RATE WITH AUTO CONTOUR icon (A).
4. Adjust the drop rate by sliding adjuster arrow (B) up or down.
5. Select check mark (C) to confirm settings.

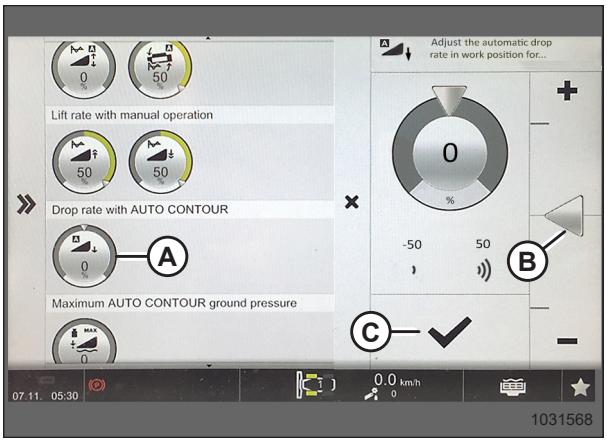

Figure 3.368: Drop Rate with Auto Contour Page

Adjusting Auto Reel Speed – CLAAS 8000/7000 Series

WARNING

Clear the area of other persons, pets etc. Keep children away from machinery. Walk around the machine to be sure no one is under, on, or close to it.

NOTE:

Changes may have been made to the combine controls or display since this document was published. Refer to the combine operator's manual for updates.

1. From the main page, select FRONT ATTACHMENT (A).



Figure 3.369: CEBIS Main Page

2. From the list, select SETTINGS ON FRONT ATTACHMENT (A).
3. Select REEL TARGET VALUES (B).
4. Select REEL SPEED ADJUST icon (C).

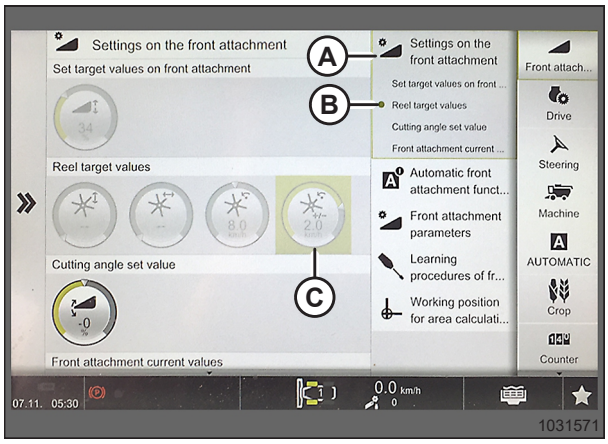

Figure 3.370: Settings on Front Attachment Page

5. Adjust the reel speed target value by sliding adjuster arrow (A) up or down.
6. Select check mark (B) to save setting.



Figure 3.371: Reel Speed Target Value Page

Calibrating Reel Height Sensor – CLAAS 8000/7000 Series

WARNING

Clear the area of other persons, pets etc. Keep children away from machinery. Walk around the machine to be sure no one is under, on, or close to it.

NOTE:

Changes may have been made to the combine controls or display since this document was published. Refer to the combine operator's manual for updates.

1. Place header off the ground 15–25 cm (6–10 in.).

   IMPORTANT:

   Do **NOT** turn off the engine. The combine has to be at full idle for the sensors to calibrate properly.

2. From the main page, select FRONT ATTACHMENT (A).



Figure 3.372: CEBIS Main Page

3. Select LEARNING PROCEDURES FOR FRONT ATTACHMENT (A).
4. Select LEARNING REEL HEIGHT (B).

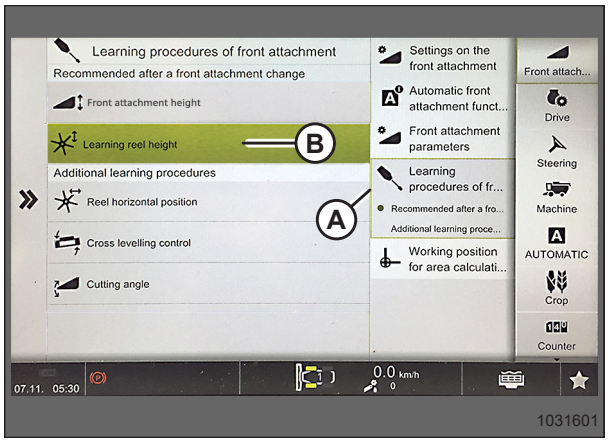

Figure 3.373: Front Attachment Page

5. Follow the prompts that appear in Description and Notes fields (A).

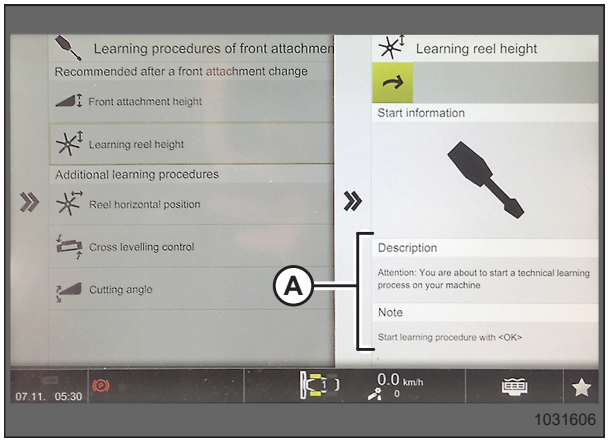

Figure 3.374: Learning Reel Height Page

6. When prompted, select OK button (A) to start the learning procedure.

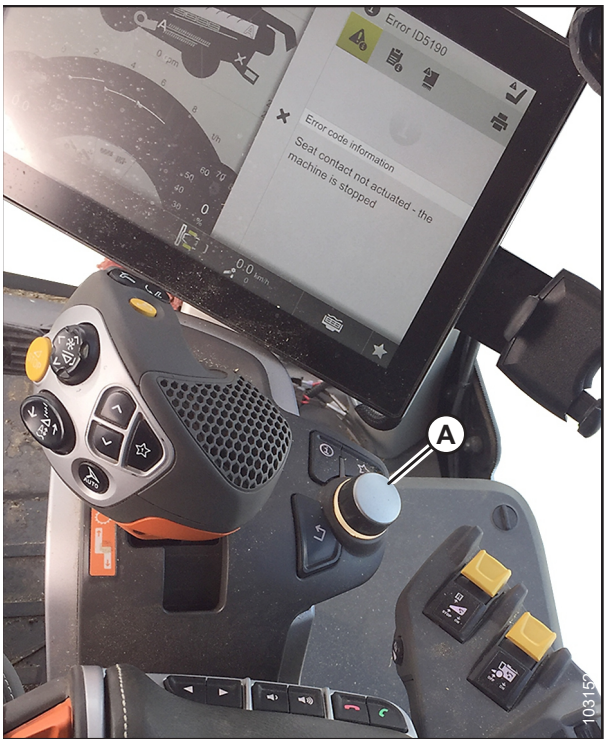

Figure 3.375: Operator Controls

3.9.12 Gleaner R65/R66/R75/R76 and S Series Combines

Checking Voltage Range from the Combine Cab – Gleaner R65/R66/R75/R76 and Pre-2016 S Series

NOTE:

Changes may have been made to the combine controls or display since this document was published. Refer to the combine operator's manual for updates.

1. Position the header 150 mm (6 in.) above the ground, and unlock the float.
2. Check that float lock linkage is on down stops (washer [A] cannot be moved) at both locations.

   NOTE:

   If the header is not on down stops during the next two steps, the voltage may go out of range during operation causing a malfunction of the AHHC system. If the header is not on down stops, refer to *3.10 Leveling the Header, page 348* for instructions.

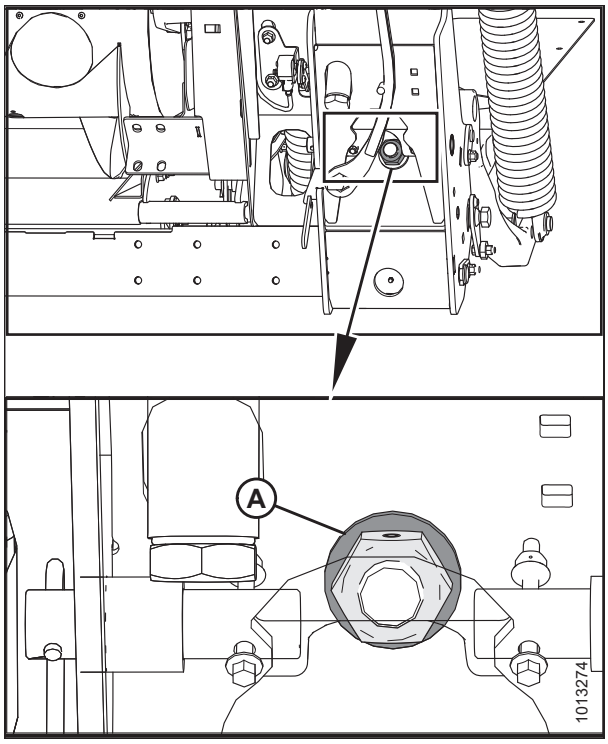

Figure 3.376: Float Lock

3. Ensure pointer (A) on the float indicator box is on 0. If necessary, adjust cable take-up bracket (B) until pointer is on 0.

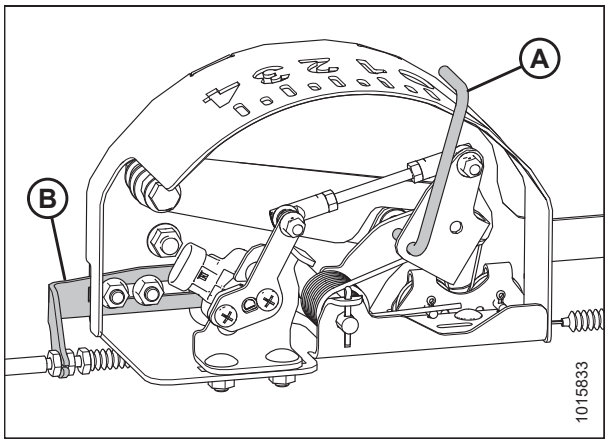

Figure 3.377: Float Indicator Box

Figure 3.378: Combine Heads-Up Display

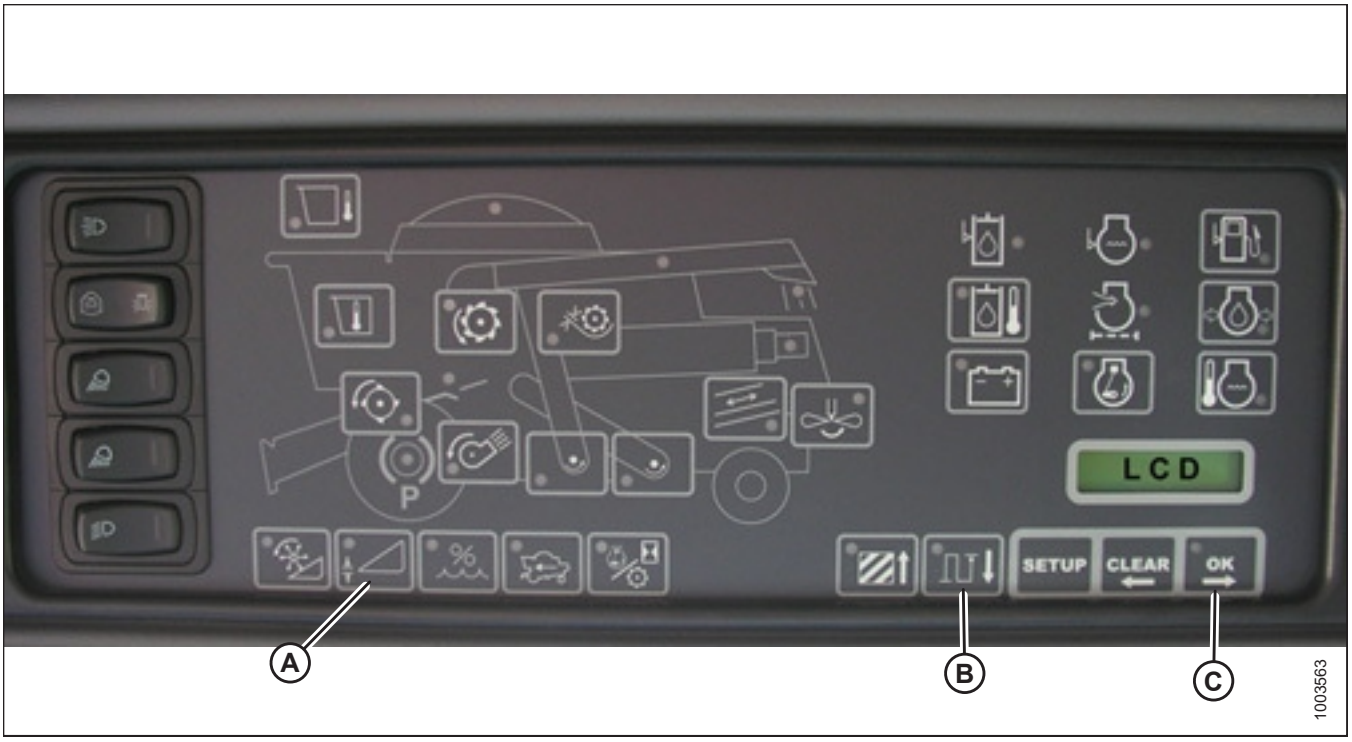

4. Ensure header float is unlocked.
5. Press and hold button (A) on the heads-up display for 3 seconds to enter diagnostic mode.
6. Scroll down using button (B) until LEFT is displayed on the LCD screen.
7. Press OK button (C). The number indicated on the LCD screen is the voltage reading from the sensor of the AHHC. Raise and lower the header to see the full range of voltage readings.

Engaging the Auto Header Height Control – Gleaner R65/R66/R75/R76 and Pre-2016 S Series

NOTE:

Changes may have been made to the combine controls or display since this document was published. Refer to the combine operator's manual for updates.

The following system components are required in order for the auto header height control (AHHC) to work:

- Main module and header driver module mounted in card box in fuse panel (FP) module.
- Multifunction control handle operator inputs.
- Operator inputs mounted in the control console (CC) module panel.

NOTE:

In addition to the above components, the electrohydraulic header lift control valve is an integral part of the system.

Figure 3.379: Combine Auto Header Height Controls

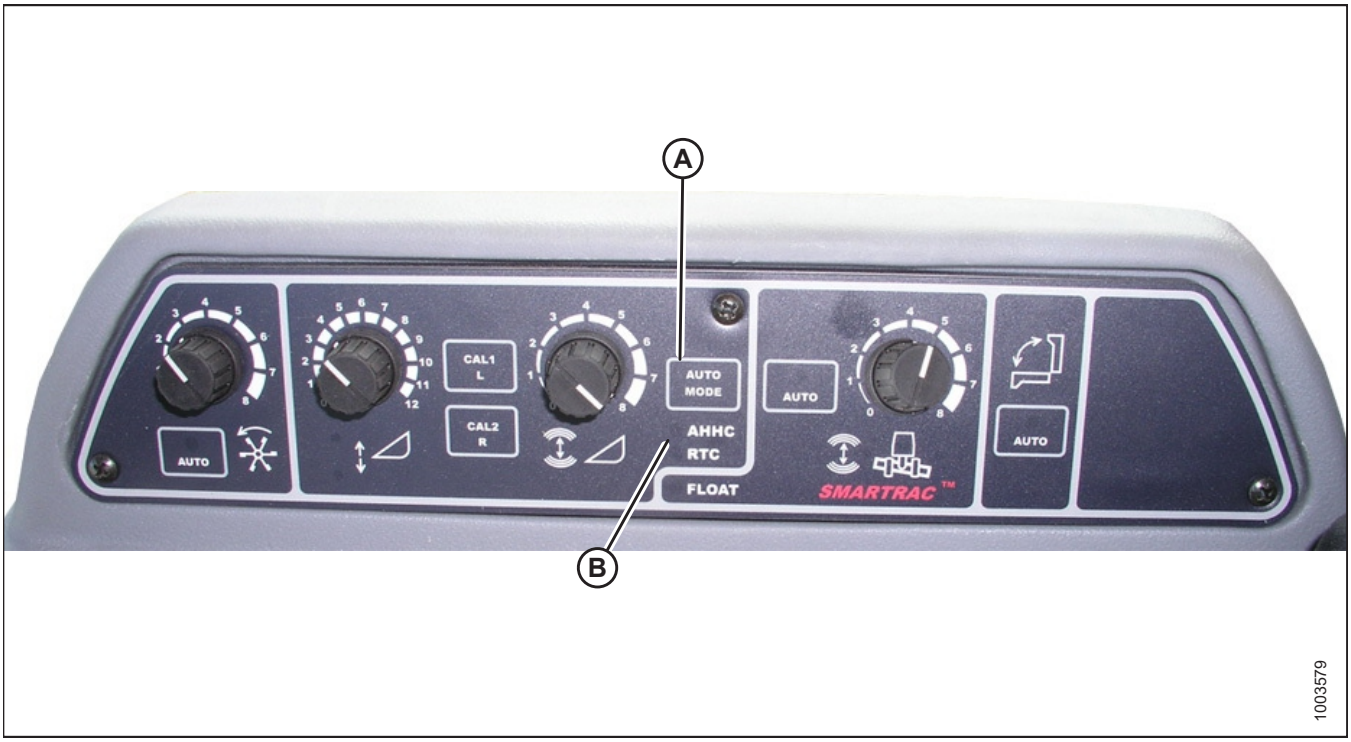

1. Press AUTO MODE button (A) until AHHC LED light (B) begins flashing. If the RTC light is flashing, press AUTO MODE button (A) again until it switches to AHHC.

⚠ WARNING

Check to be sure all bystanders have cleared the area.

2. Briefly press button (A) on the control handle. The AHHC light should change from flashing to solid. The header also should drop toward the ground. The AHHC is now engaged and can be adjusted for height and sensitivity.
3. Use controls to adjust height and sensitivity to changing ground conditions such as shallow gullies and field drainage trenches.

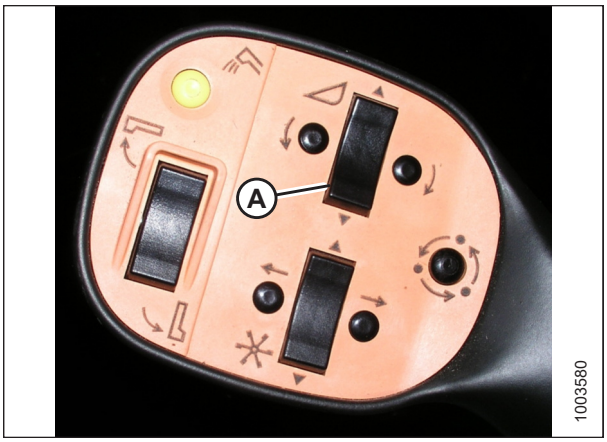

Figure 3.380: Control Handle

Calibrating the Auto Header Height Control – Gleaner R65/R66/R75/R76 and Pre-2016 S Series

Calibration should be done on flat, level ground without the header clutches engaged. Header height and header tilt must not be in auto or standby modes. The engine rpm must be above 2000 rpm. The header tilt option on 2004 and earlier model combines does not work with MacDon headers. This system will have to be removed and disabled in order to calibrate the auto header height control (AHHC). For instructions, refer to the combine operator's manual.

NOTE:

Changes may have been made to the combine controls or display since this document was published. Refer to the combine operator's manual for updates.

NOTE:

If header float is set too light, it can prevent calibration of AHHC. You may need to set the float heavier for calibration procedure so header doesn't separate from the float module.

Figure 3.381: Combine Auto Header Height Controls

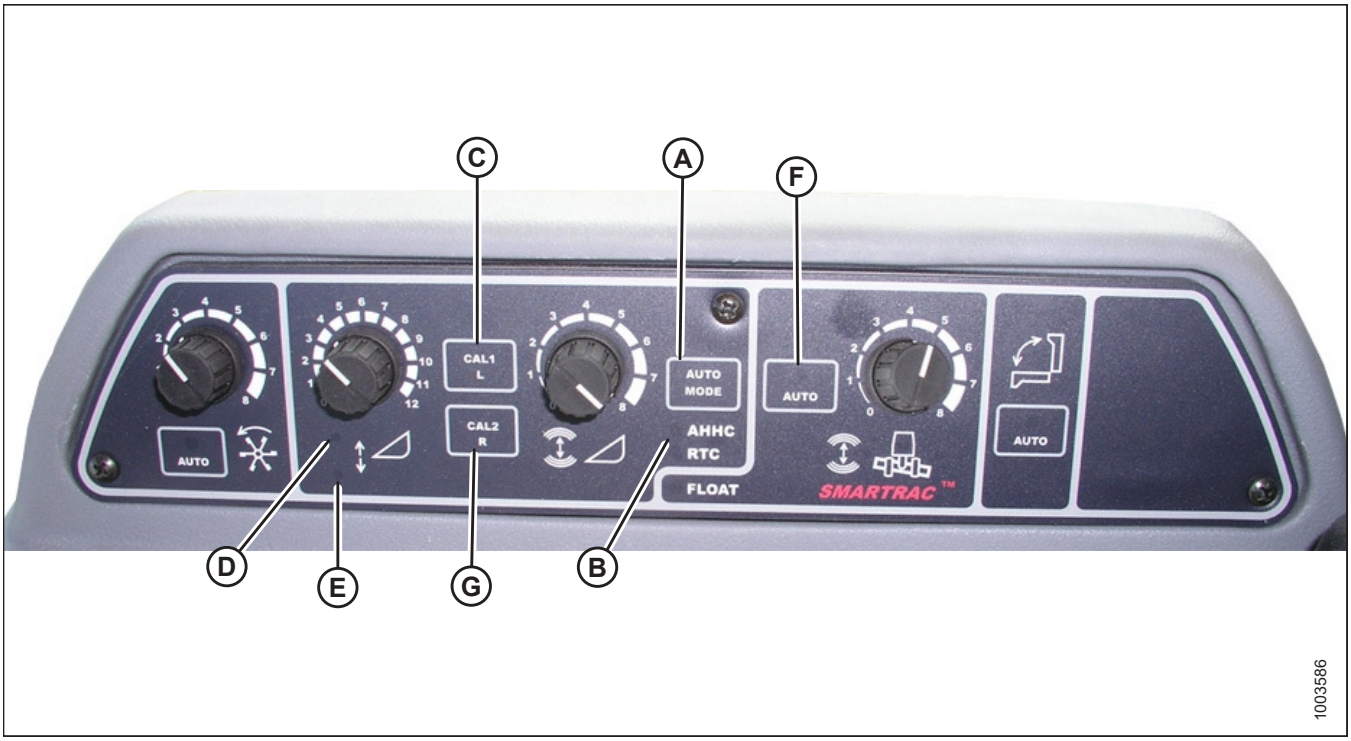

A - AUTO MODE Button
B - AHHC Light
C - CAL1 Button
D - Raise Header
E - Lower Header
F - AUTO Mode
G - CAL2 Button

NOTE:

For best performance of the auto header height control (AHHC), perform these procedures with the center-link set to **D**. When setup and calibration are complete, adjust the center-link back to desired header angle. For instructions, refer to *3.8.4 Header Angle, page 101*.

1. Ensure center-link is set to **D**.
2. Press AUTO MODE button (A) until AHHC light (B) is illuminated.
3. Press and hold CAL1 button (C) until you see the following lights flash: raise header (D), lower header (E), tilt auto mode (F), and AHHC (B).
4. Fully lower the header, and continue to hold the HEADER LOWER button for 5–8 seconds to ensure float module has separated from header.
5. Press CAL2 button (G) until lower header light (E) stops flashing, and release it when raise header light (D) begins flashing.
6. Raise header to its maximum height (ensure the header is resting on the down-stop pads).
7. Press CAL2 button (G) until raise header light (D) turns off.

   NOTE:

   The following steps are applicable only to 2005 and newer combines with the Smartrac feeder house.

8. Wait for the HEADER TILT LEFT light (not shown) to start flashing, and then tilt header to the maximum left position.
9. Press CAL2 button (G) until the HEADER TILT LEFT light (not shown) stops flashing, and release button when the HEADER TILT RIGHT light (not shown) begins flashing.
10. Tilt the header to the maximum right position.
11. Press CAL2 button (G) until all of the following lights flash: raise header (D), lower header (E), height auto mode (A), right header and left header (not shown), and tilt auto mode (F).
12. Center the header.
13. Press CAL1 button (C) to exit calibration and save all values to the memory. All lights should stop flashing.

    NOTE:

    If float was set heavier to complete the AHHC calibration procedure, adjust to recommended operating float after the calibration is complete.

Turning off the Accumulator – Gleaner R65/R66/R75/R76 and Pre-2016 S Series

The accumulator will affect the combine's reaction time and greatly inhibit the auto header height control's performance.

Refer to the combine operator's manual for proper procedure when turning accumulator off and on. For best performance, turn the feeder house accumulator off.

NOTE:

The accumulator is located in front of the front left axle beam.



Figure 3.382: Combine Accumulator ON/OFF Switch

A - Accumulator Lever (Off Position)

Adjusting the Header Raise/Lower Rate – Gleaner R65/R66/R75/R76 and Pre-2016 S Series

NOTE:

Changes may have been made to the combine controls or display since this document was published. Refer to the combine operator's manual for updates.

The auto header height control (AHHC) system's stability is affected by hydraulic flow rates. Ensure that header raise (A) and header lower (B) adjustable restrictors in the hydraulic manifold are adjusted so that it takes approximately 6 seconds to raise the header from ground level to maximum height (hydraulic cylinders fully extended), and approximately 6 seconds to lower the header from maximum height to ground level.

If there is too much header movement (for example, hunting) when the header is on the ground, adjust the lower rate to a slower rate of drop: 7 or 8 seconds.

NOTE:

Make this adjustment with the hydraulic system at normal operating temperature (54.4°C [130°F]) and the engine running at full throttle.

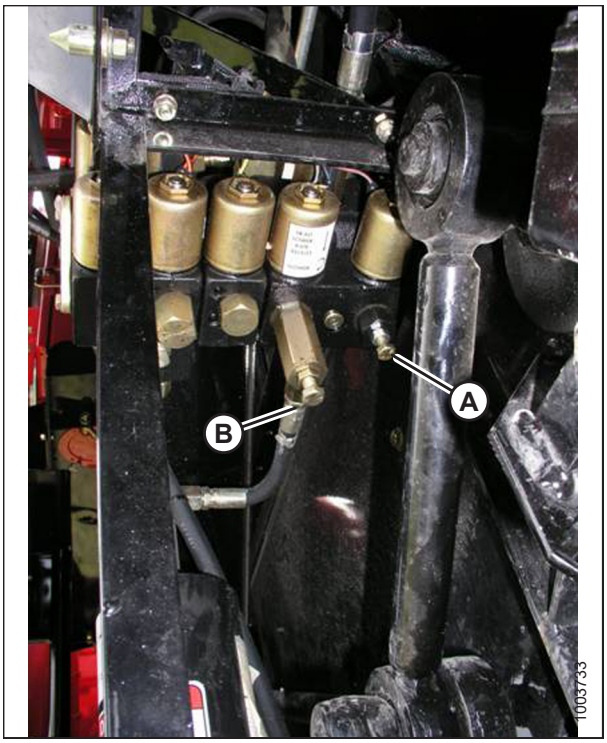

Figure 3.383: Header Raise and Lower Adjustable Restrictors

Adjusting Ground Pressure – Gleaner R65/R66/R75/R76 and Pre-2016 S Series

NOTE:

Changes may have been made to the combine controls or display since this document was published. Refer to the combine operator's manual for updates.

NOTE:

Indicator (A) should be at position 0 (B) with the header 152 mm (6 in.) off the ground. If not, the float sensor output voltage should be checked. Refer to Step *5, page 154*. When the header is on the ground, the indicator should be at position 1 (C) for low ground pressure, and at position 4 (D) for high ground pressure. Crop and soil conditions determine the amount of float to use. The ideal setting is as light as possible without header bouncing or missing crop. Operating with heavy settings prematurely wears the cutterbar wearplates.

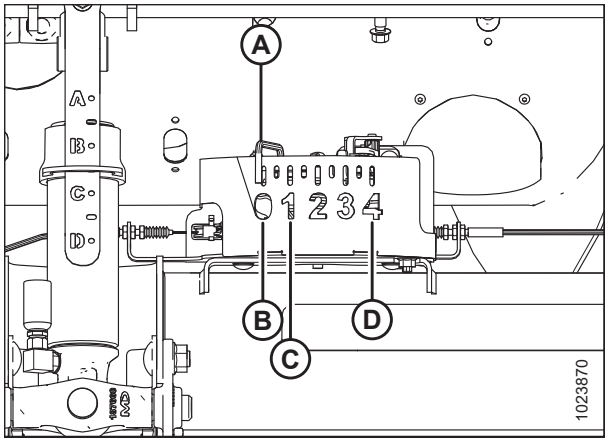

Figure 3.384: Float Indicator Box

1. Ensure the header is in auto header height control (AHHC) mode. This is indicated by AUTO MODE LED light (A) displaying a continuous, solid light.
2. The header will lower to the height (ground pressure) corresponding to the position selected with height control knob (B). Turn the knob counterclockwise for minimum ground pressure, and clockwise for maximum ground pressure.

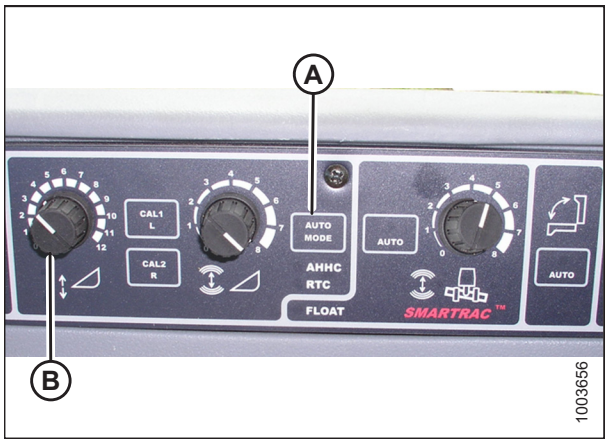

Figure 3.385: AHHC Console

Adjusting the Sensitivity of the Auto Header Height Control – Gleaner R65/R66/R75/R76 and Pre-2016 S Series

NOTE:

Changes may have been made to the combine controls or display since this document was published. Refer to the combine operator's manual for updates.

Figure 3.386: Auto Header Height Control Console



SENSITIVITY ADJUSTMENT dial (A) controls the distance the cutterbar must travel up or down before the auto header height control (AHHC) reacts and raises or lowers the feeder house.

When SENSITIVITY ADJUSTMENT dial (A) is set to maximum (turned completely clockwise), only small changes in ground height are needed to cause the feeder house to raise or lower. In this position, the cutterbar moves up and down approximately 19 mm (3/4 in.) before the control module signals the hydraulic control valve to raise or lower the header frame.

When SENSITIVITY ADJUSTMENT dial (A) is set to minimum (turned completely counterclockwise), large changes in ground height are needed to cause the feeder house to raise or lower. In this position, the cutterbar moves up and down approximately 51 mm (2 in.) before the control module signals the hydraulic control valve to raise or lower the header frame.

The HEADER SENSE LINE input also changes the range of the sensitivity. When connected to a draper, the counterclockwise position (least sensitive) allows for approximately 102 mm (4 in.) of vertical travel before correction is made.

Troubleshooting Alarms and Diagnostic Faults – Gleaner R65/R66/R75/R76 and Pre-2016 S Series

NOTE:

Changes may have been made to the combine controls or display since this document was published. Refer to the combine operator's manual for updates.

Display type:

Displayed on tachometer (A) as XX or XXX.



Figure 3.387: Tachometer

Figure 3.388: Combine Heads-Up Display

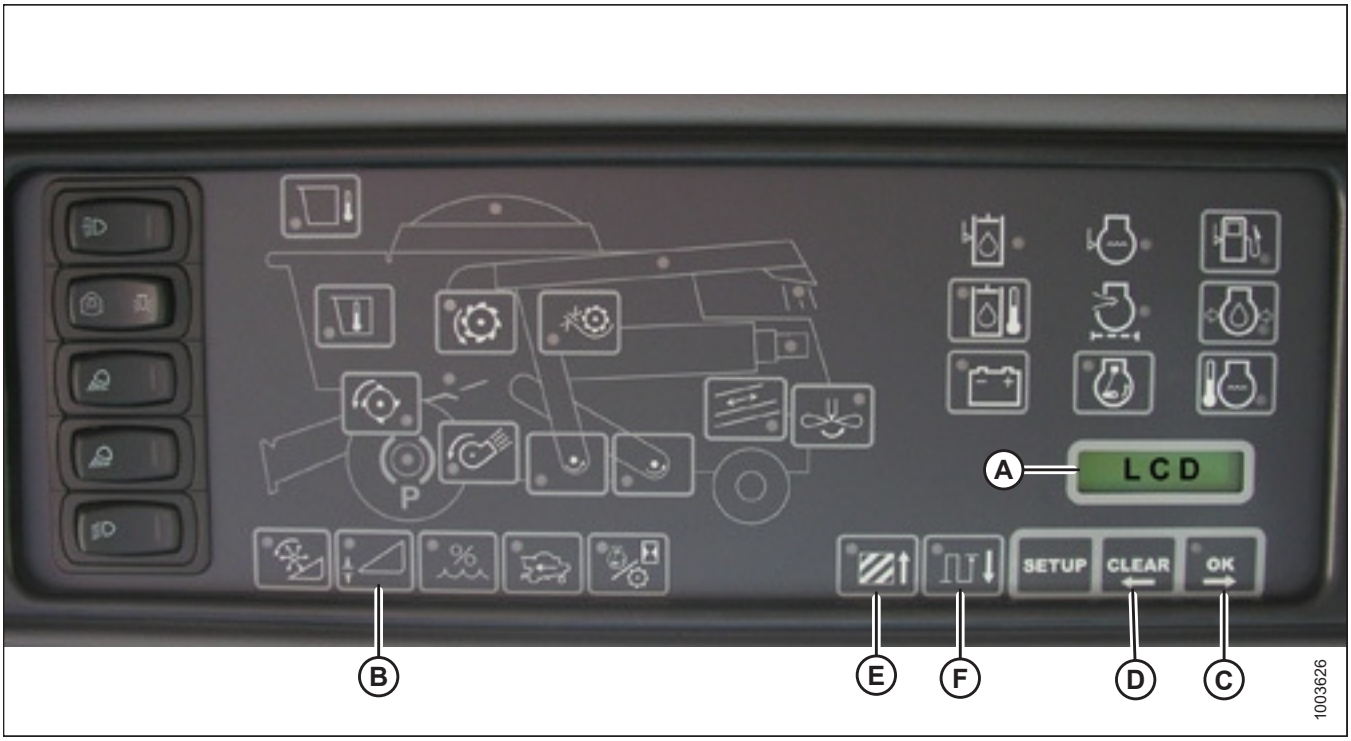

NOTE:

Displayed on LCD (A) as XX in. or XXX cm.

Alarm conditions:

If an error message is received from the fuse panel, an audible alarm sounds. The alarm buzzer sounds five times every 10 seconds. The LCD on the electronic instrument panel (EIP) indicates the header system in error as HDR CTRL followed by HGT ERR for height, and HDR CTRL followed by TILT ERR for tilt. The header height LED flashes yellow two times every second.

When an alarm condition occurs, a green LED flashes on and off (green, yellow, or red depending on the input). In addition, a message is displayed on the LCD to identify the nature of the alarm. For example, HYD TEMP, OPEN, SHRT will be flashed alternately.

Diagnostic fault failures:

Refer to Figure *3.388, page 258*.

Pressing header height switch (B) for a minimum of 5 seconds will put the EIP in header diagnostic mode. The LCD (shown on previous screen) will display the message HDR DIAG when the EIP has entered header diagnostic mode.

In this mode, after 3 seconds, header fault parameter labels are displayed on the EIP LCD. All the information displayed is read-only.

OK (C) and CLEAR (D) buttons allow you to scroll through the list of parameters. If there are no active fault codes, the EIP LCD will display NO CODE.

When a parameter is displayed, its label is displayed for 3 seconds, after which its value is automatically displayed.

Pressing OK button (C) while the value is displayed will advance to the next parameter and display its label.

When a parameter label is displayed and OK button (C) is pressed before 3 seconds, the parameter's value will be displayed.

Pressing AREA (E) will cycle through the options. When LEFT is displayed on the LCD, press OK button (C), and the auto header height control (AHHC) voltage will be shown on the display.

Press DIST button (F) to cycle back through the table.

Press CLEAR button (D) to exit header diagnostics and return to normal mode.

Refer to .

3.9.13 Gleaner S9 Series Combines

Setting up the Header – Gleaner S9 Series

NOTE:

Changes may have been made to the combine controls or display since this document was published. Refer to the combine operator's manual for updates.

AGCO Tyton terminal (A) is used to set up and manage a MacDon draper header on a Gleaner S9 Series combine. Use the touch screen display to select the desired item on the screen.



Figure 3.389: Gleaner S9

A - Tyton Terminal **B - Control Handle**
C - Throttle **D - Header Control Cluster**

1. On the top right quadrant of the home screen, touch COMBINE icon (A). The COMBINE MAIN MENU opens.



Figure 3.390: Combine Icon on Home Page

2. On the COMBINE MAIN MENU, touch HEADER SETTINGS (A). The HEADER SETTINGS page opens.

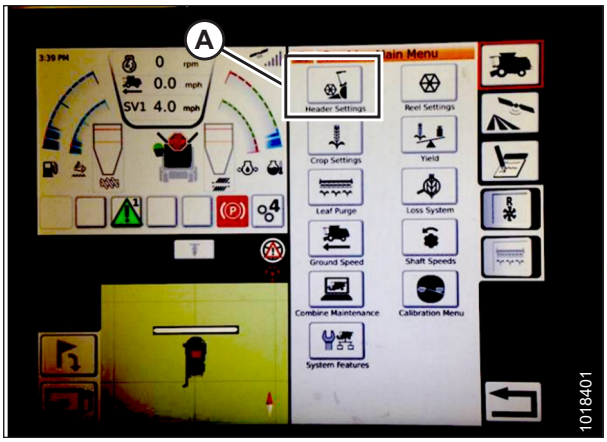

Figure 3.391: Header Settings in Combine Main Menu

3. Touch HEADER CONFIGURATION field (A). A dialog box showing predefined headers opens.
   - If your MacDon header is already set up, it appears on the header list. Touch MacDon header title (B) to highlight the selection in blue, and then touch green check mark (E) to continue.
   - If only default header (D) is shown, touch ABC button (C), and use the on-screen keyboard to enter the MacDon header information. When complete, select one of the following options to return to the HEADER SETTINGS page:
     - Green check mark (E) saves the settings
     - Garbage can icon (F) deletes the highlighted header from the list
     - Red X (G) cancels the change(s)

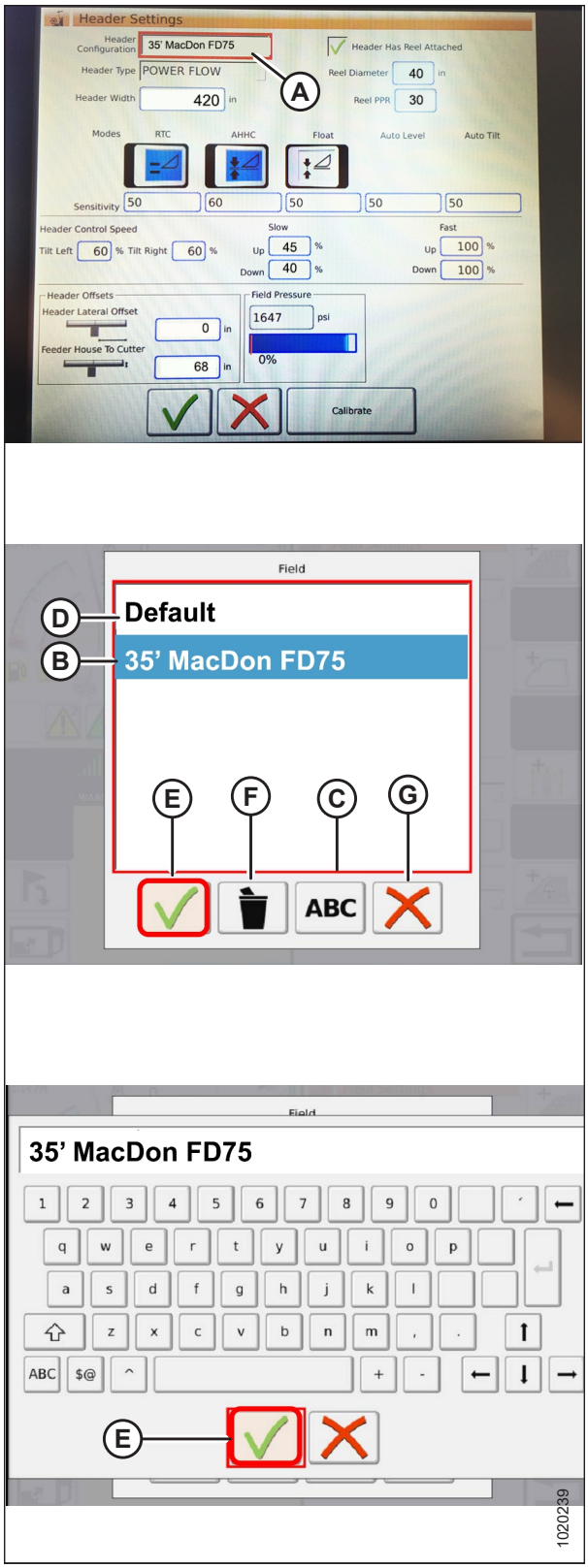

Figure 3.392: Header Configuration Menu on Header Settings Page

4. To specify the type of header installed on the machine, touch HEADER TYPE field (A).

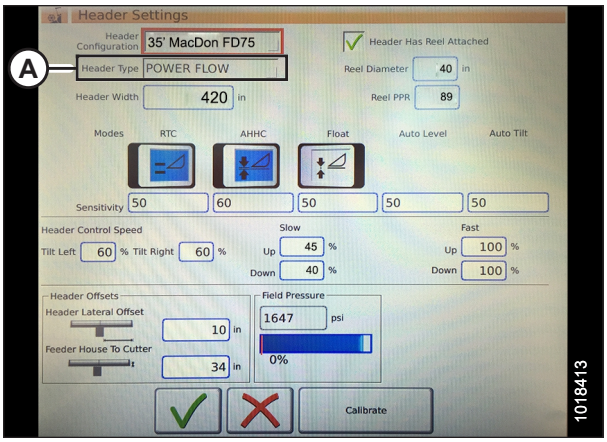

Figure 3.393: Header Settings

5. A list of predefined header types appears.
   - For MacDon D1 Series Draper and FD1 Series FlexDraper® headers, touch POWER FLOW (A)
   - Touch green check mark (B) to save the selection and continue

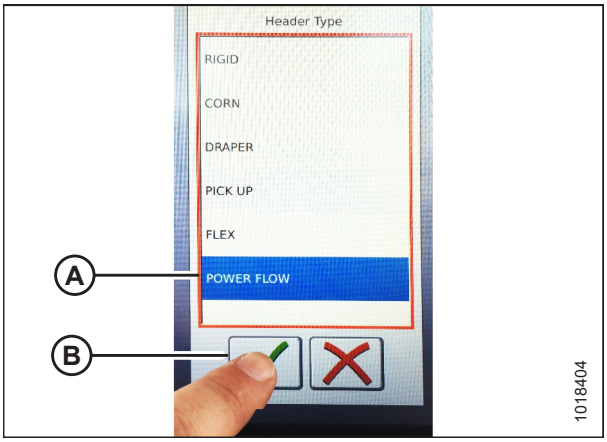

Figure 3.394: Header Type

6. Make sure that HEADER HAS REEL ATTACHED check box (A) is checked.

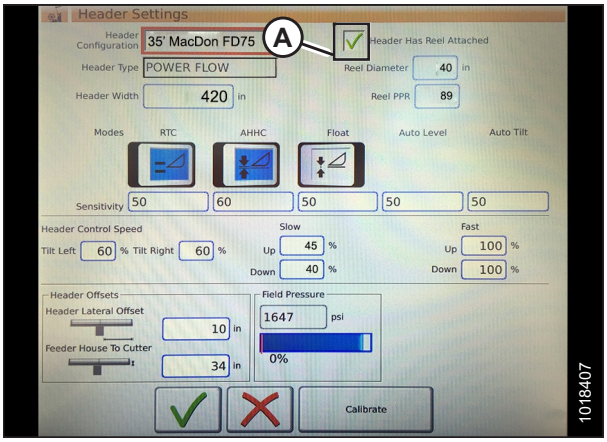

Figure 3.395: Header Settings

7. Touch REEL DIAMETER field (A) and a numeric keypad displays. Enter **40** for a MacDon reel.
8. Touch REEL PPR (Pulses Per Revolution) field (B) and enter **30** as the value for your MacDon header.

   NOTE:

   PPR is determined by the number of teeth on the reel speed sprocket.

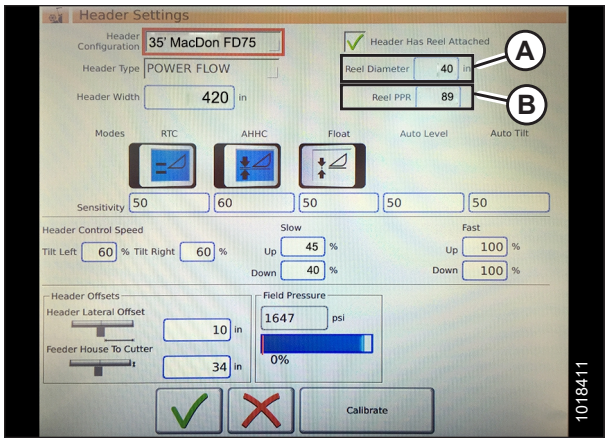

Figure 3.396: Header Settings

9. Touch green check mark (B) at the bottom of numeric keypad (A) when complete, or the red X to cancel.

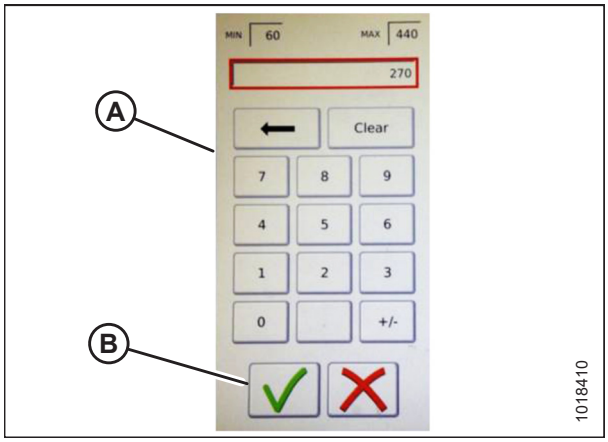

Figure 3.397: Numeric Keypad

10. When complete, touch green check mark (A) at the bottom of the HEADER SETTINGS page.

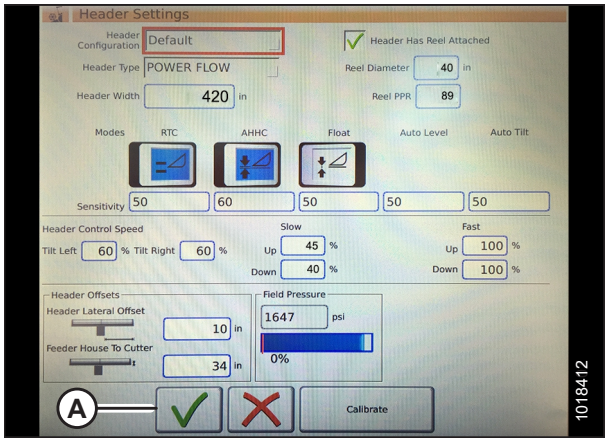

Figure 3.398: Header Settings Page

Setting Minimum Reel Speed and Calibrating Reel – Gleaner S9 Series

WARNING

Clear the area of other persons, pets etc. Keep children away from machinery. Walk around the machine to be sure no one is under, on, or close to it.

NOTE:

Changes may have been made to the combine controls or display since this document was published. Refer to the combine operator's manual for updates.

1. From the COMBINE MAIN MENU, touch REEL SETTINGS (A) to open the REEL SETTINGS page.

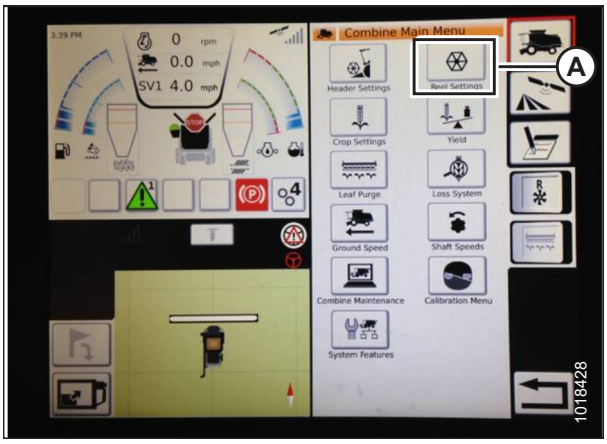

Figure 3.399: Reel Settings on Combine Main Menu

2. To set minimum reel speed, touch SPEED MINIMUM FIELD (B). The on-screen keyboard displays. Enter the desired value. Touch the green check mark to accept the new value, or the red X to cancel. The reel speed is shown in mph and rpm.

   NOTE:

   At the bottom of the REEL SETTINGS page, the reel diameter and reel pulses per revolution (PPR) are displayed. These values have already been set in the HEADER SETTINGS page.

3. Reel speed is calibrated on the REEL SETTINGS page by touching CALIBRATE button (A) in the top right of the page.



Figure 3.400: Reel Settings Calibration

The CALIBRATION WIZARD opens and displays a hazard warning.

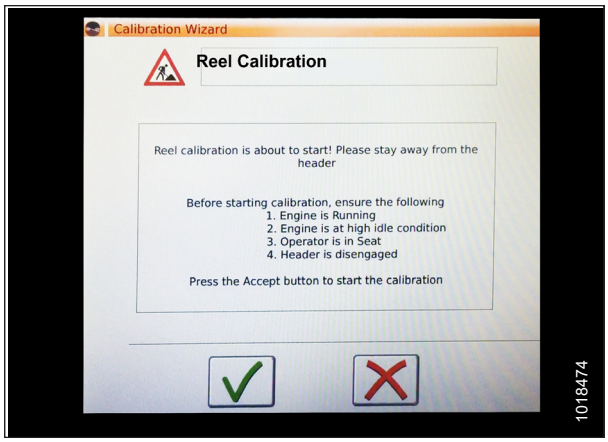

Figure 3.401: Calibration Wizard

4. Make sure to meet all the conditions listed in the CALIBRATION WIZARD warning. Press green check mark (A) to accept and start reel calibration. Pressing red X (B) will cancel the calibration procedure.

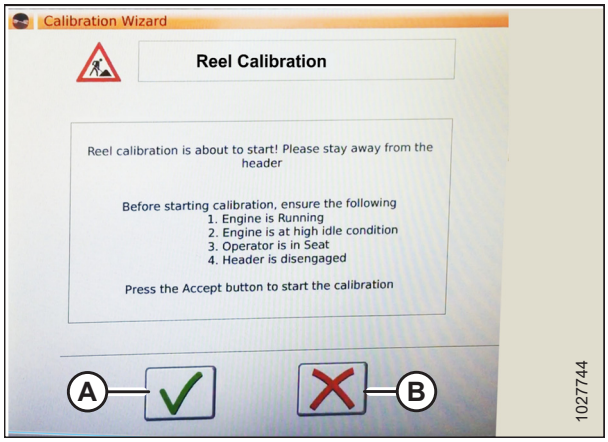

Figure 3.402: Calibration Wizard

5. A message appears in the CALIBRATION WIZARD stating that reel calibration has started. The reel will begin turning slowly and increase to high speed. A progress bar is provided. If necessary, touch the red X to cancel. Otherwise, wait for the message that reel calibration has completed successfully. Touch the green check mark to save the calibrated settings.

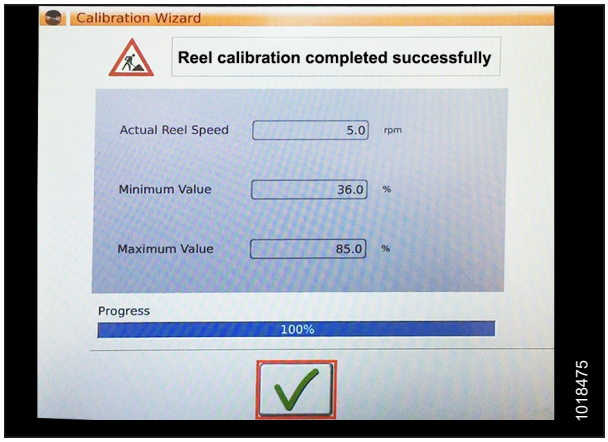

Figure 3.403: Calibration Progress

Setting up Automatic Header Controls – Gleaner S9 Series

Automatic header functions are configured on the HEADER SETTINGS page.

NOTE:

Changes may have been made to the combine controls or display since this document was published. Refer to the combine operator's manual for updates.

1. **Automatic Control Functions:** There are toggle (OFF/ON) switches on the HEADER SETTINGS page for the automatic control functions. For MacDon headers, ensure the following two functions are enabled as shown:

   - RTC (return to cut) (A)
   - AHHC (automatic header height control) (B)

   All other switches are disabled (not highlighted).

2. **Sensitivity** setting (C) controls how responsive a control (RTC or AHHC) is to a given change in sensor feedback. The setting fields are located directly below the toggle switches. To enter a new sensitivity setting, touch the setting field below the specific toggle switch, and enter the new value in the on-screen keyboard.

   - Increase sensitivity if the combine does not change the feeder position quickly enough when in Auto Mode.
   - Decrease sensitivity if the combine hunts for a position in Auto Mode.

   NOTE:

   Recommended sensitivity starting points for MacDon headers are:

   - **50** for RTC (A)
   - **60** for AHHC (B)

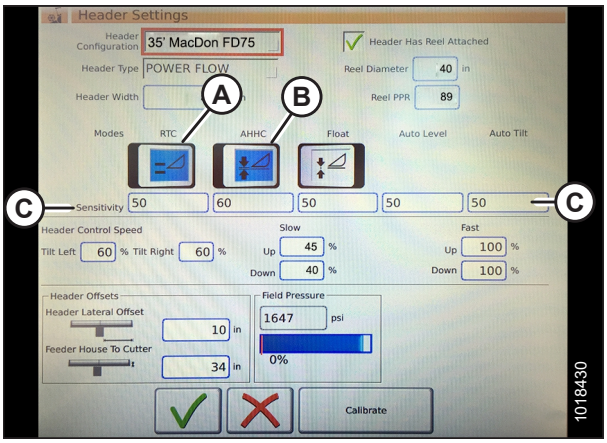

Figure 3.404: Automatic Controls and Sensitivity Settings

3. **Header Speed:** HEADER CONTROL SPEED area (A) on the HEADER SETTINGS page is used to adjust the following speeds:

   - Tilt left and right is the lateral tilt of the combine faceplate
   - Header up and down (slow and fast speeds) is a two-stage button with slow speed on the first detent and fast on the second

   NOTE:

   Recommended header control speed starting points

   - Slow: 45 up / 40 down
   - Fast: 100 up / 100 down

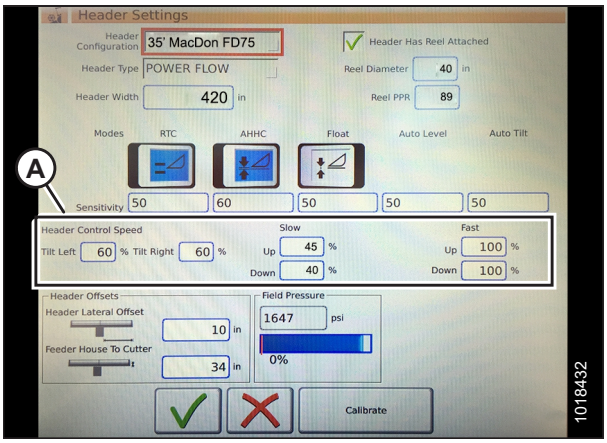

Figure 3.405: Header Speed Control Settings

4. **Header Offsets (A):** Offset distances are important for yield mapping. There are two adjustable dimensions on the HEADER SETTINGS page:

   - Header Lateral Offset: the distance between the centerline of the header and the centerline of the machine. This should be set at **0** for a MacDon header.
   - Feeder House to Cutter: the distance from the machine interface to the cutterbar. This should be set at **68** for a MacDon header.

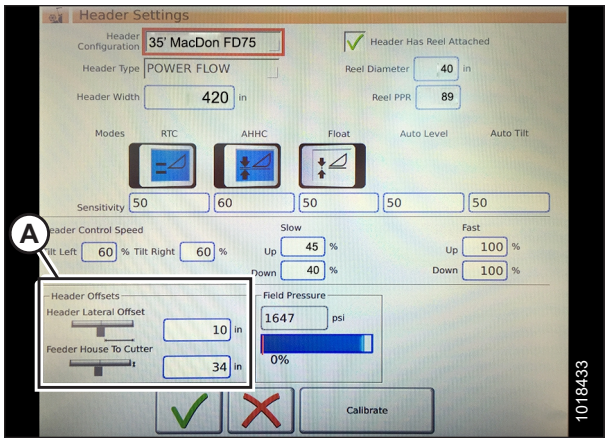

Figure 3.406: Header Offset Settings

Figure 3.407: MacDon Header Settings Inputs

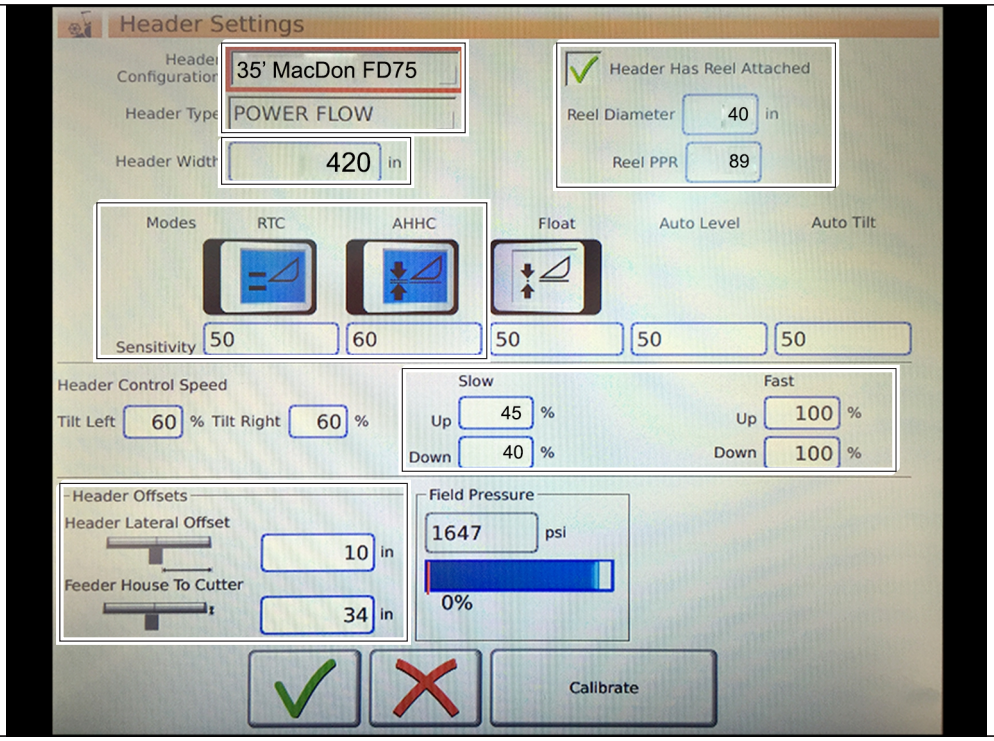

Calibrating the Header – Gleaner S9 Series

The auto header control functions are configured on the HEADER SETTINGS page.

WARNING

Clear the area of other persons, pets etc. Keep children away from machinery. Walk around the machine to be sure no one is under, on, or close to it.

NOTE:

Changes may have been made to the combine controls or display since this document was published. Refer to the combine operator's manual for updates.

1. On the COMBINE MAIN MENU, touch HEADER SETTINGS (A).

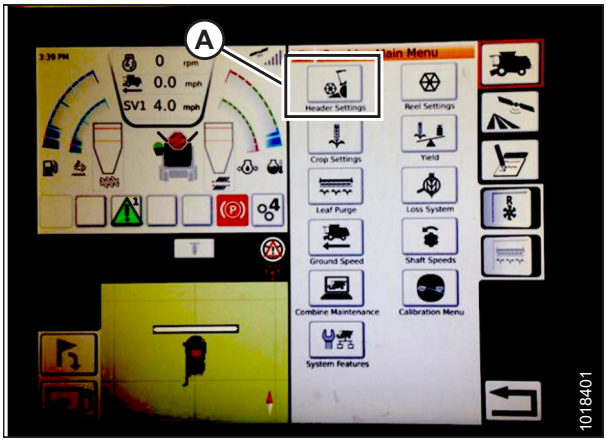

Figure 3.408: Combine Main Menu

2. Touch CALIBRATE (A) at the bottom right of the page. The HEADER CALIBRATION page displays.

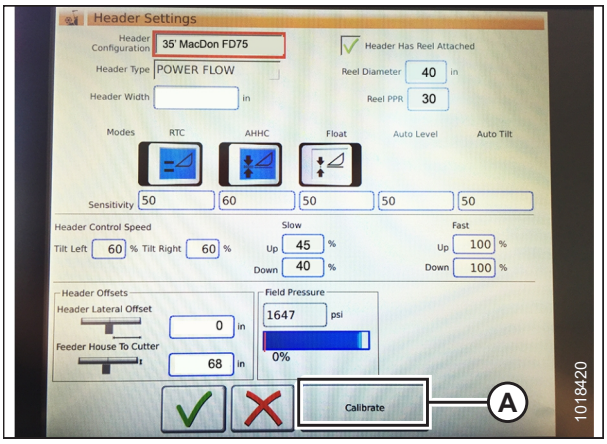

Figure 3.409: Header Settings Page

The right side of the page shows Header Calibration information (A). Results are shown for a variety of sensors (B):

- Left and right header sensor (voltage) (values will be the same with MacDon headers)
- Header height sensor (mA)
- Tilt position sensor (mA)

The following valid modes are shown with check marks (C) below sensor values (B):

- Return to cut
- Automatic header height control

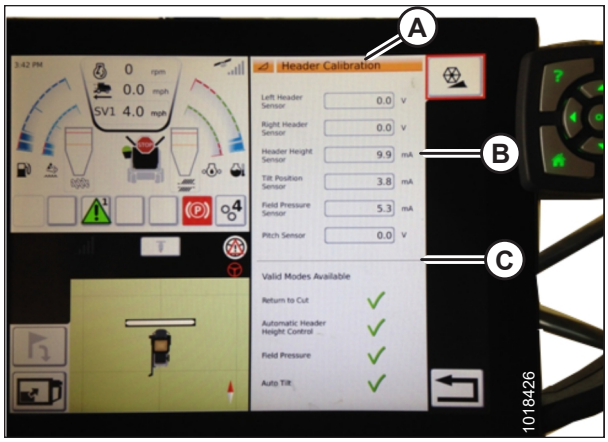

Figure 3.410: Header Calibration Page

WARNING

Clear the area of other persons, pets etc. Keep children away from machinery. Walk around the machine to be sure no one is under, on, or close to it.

3. On the control handle, touch HEADER DOWN button (A). Sensor values start changing on the HEADER CALIBRATION page as the header lowers.

   NOTE:

   The header needs to be lowered all the way, and then raised off the ground. The range should be between **0.5 and 4.5 V**. If the value is not in that range, the sensor needs to be adjusted. For instructions, refer to *Adjusting Voltage Limits – One-Sensor System, page 159* or *Adjusting Voltage Limits – Two-Sensor System, page 160*.



Figure 3.411: Header Down Switch

4. When the sensor values are stable, touch CALIBRATE icon (A).

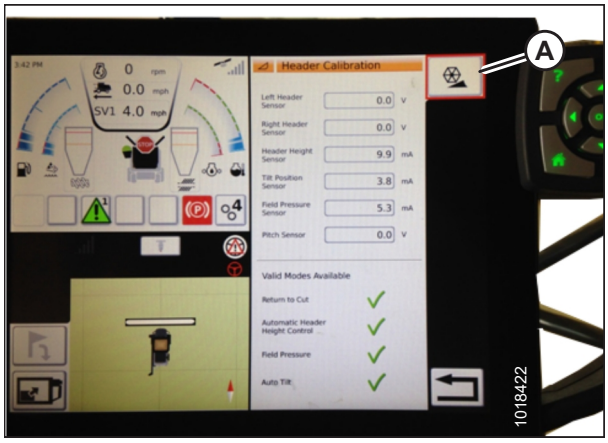

Figure 3.412: Header Calibration

5. The hazard warning for HEADER CALIBRATION appears. Make sure that all conditions are met.
6. Touch the green check mark at the bottom of the page to start the CALIBRATION WIZARD.

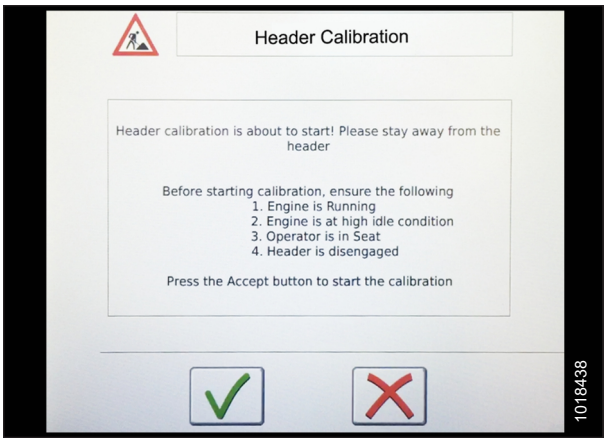

Figure 3.413: Header Calibration Warning

A progress bar is provided and the calibration can be stopped at any time by touching the red X. The header moves automatically and erratically during this process.

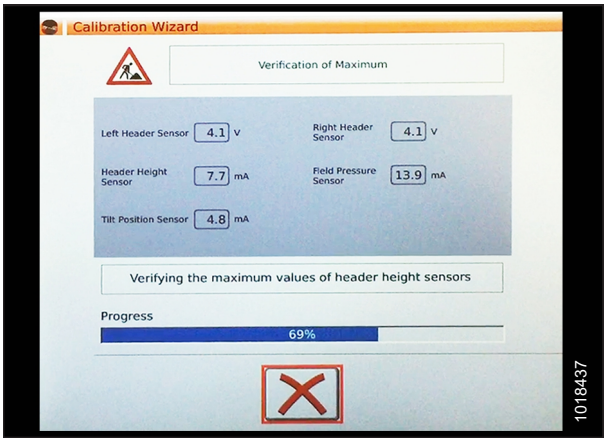

Figure 3.414: Calibration in Progress

7. When the calibration is complete, a message displays, and summary information (A) is shown. Green check marks confirm the functions have been calibrated (B). Touch bottom green check mark (C) to save.

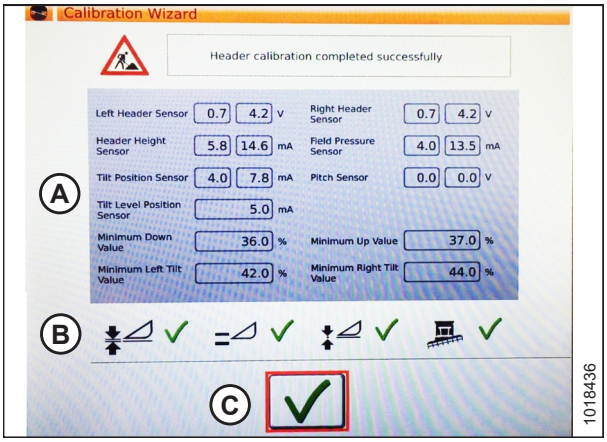

Figure 3.415: Completed Calibration Page

NOTE:

Touch CALIBRATION icon (A) on the COMBINE MAIN MENU page to display the CALIBRATION MENU where you can choose from a variety of calibrations including header and reel calibration.

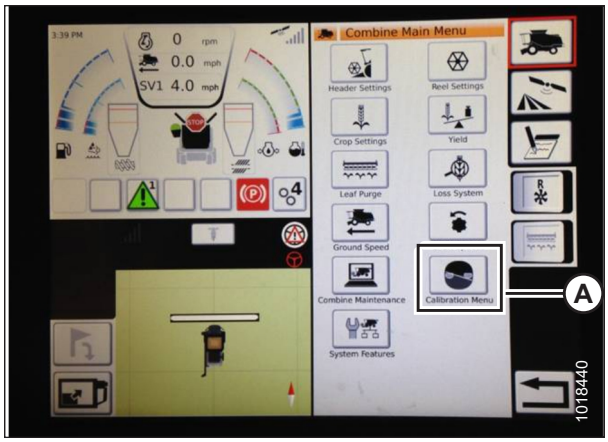

Figure 3.416: Direct Calibration Menu

Operating the Header – Gleaner S9 Series

NOTE:

Changes may have been made to the combine controls or display since this document was published. Refer to the combine operator's manual for updates.

The following controls are used to operate the auto header height control (AHHC) functions:

- Tyton terminal (A)
- Control handle (B)
- Throttle (C)
- Header control cluster (D)

Use the combine operator's manual to familiarize yourself with the controls.



Figure 3.417: Gleaner S9 Operator Controls

1. With the header running, set lateral tilt switch (A) to MANUAL.
2. Engage the AHHC by pressing switch (B) upward to the **I** position.

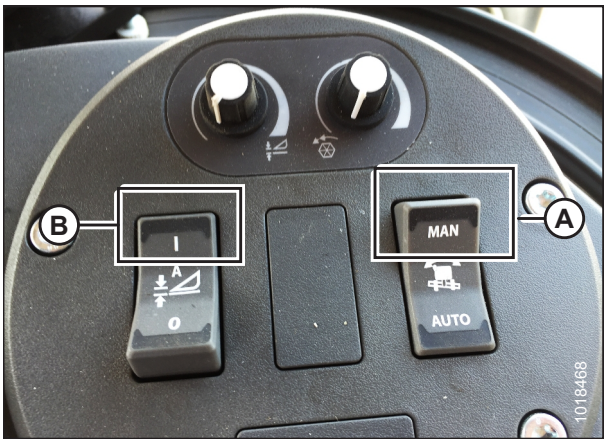

Figure 3.418: Header Control Cluster

3. Press AHHC control switch (A) on the control handle to engage the AHHC. The header moves to the current setpoint position.

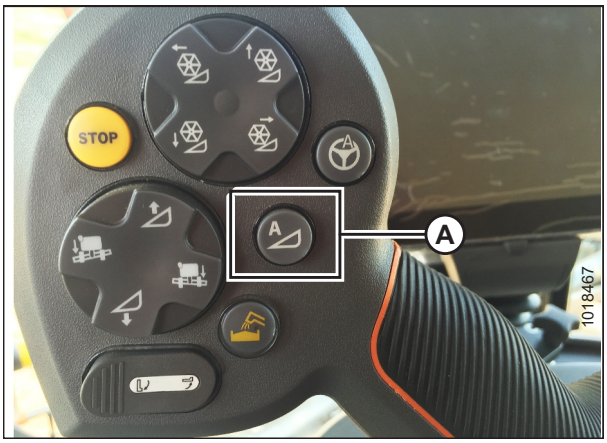

Figure 3.419: AHHC on Control Handle

4. Use HEADER HEIGHT SETPOINT control dial (A) as necessary to fine-tune the position.

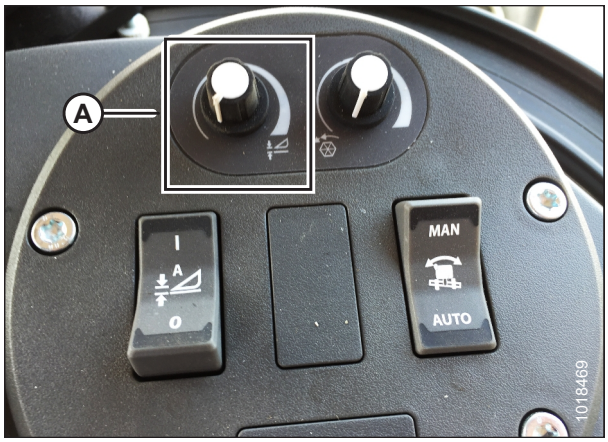

Figure 3.420: Header Control Cluster

Reviewing Header In-Field Settings – Gleaner S9 Series

NOTE:

Changes may have been made to the combine controls or display since this document was published. Refer to the combine operator's manual for updates.

1. To view header group settings, touch HEADER icon (A) on the right side of the home page.
2. The following information is displayed:
   - CURRENT POSITION of header (B).
   - SETPOINT cut-off position (C) (indicated by red line)
   - HEADER symbol (D) – touch to adjust the setpoint cut-off position using the scroll wheel on the right side of the Tyton terminal.
   - CUT HEIGHT for AHHC (E) – fine-tune with the header height setpoint control dial on the header control cluster.
   - HEADER WORKING WIDTH (F)
   - HEADER PITCH (G)

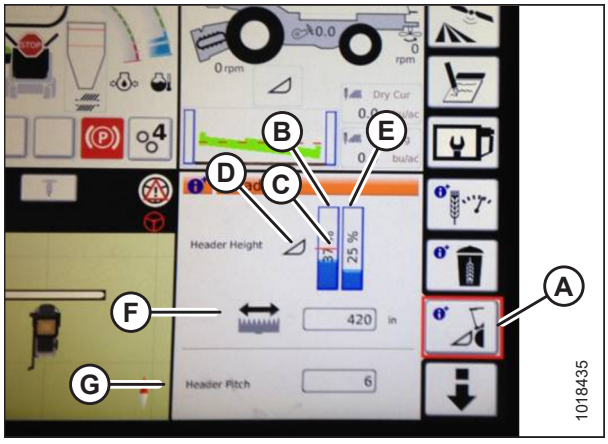

Figure 3.421: Header Groups

3. Touching a field opens the on-screen keyboard so that values can be adjusted. Enter the new value and touch the green check mark when complete.

   NOTE:

   Scroll wheel (A) is located on the right side of the Tyton terminal.

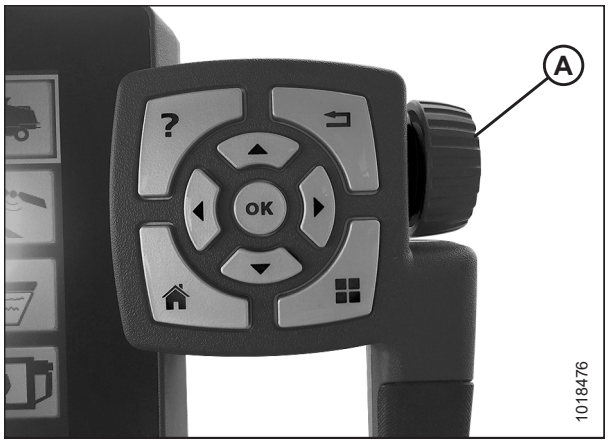

Figure 3.422: Adjustment Wheel on Right Side of Tyton Terminal

NOTE:

HEADER HEIGHT SETPOINT control dial (A) is on the header control cluster.

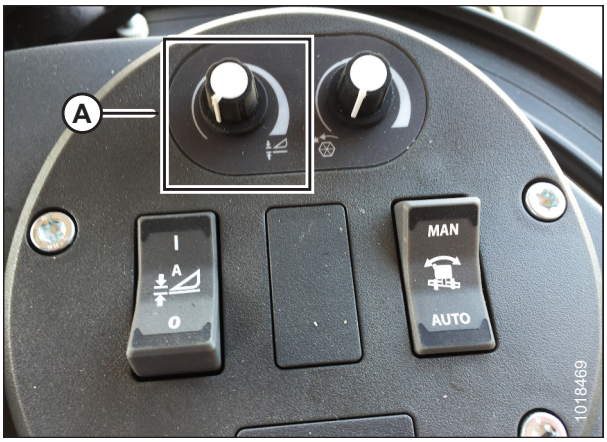

Figure 3.423: Header Control Cluster

3.9.14 John Deere 60 Series Combines

Checking Voltage Range from the Combine Cab – John Deere 60 Series

NOTE:

Changes may have been made to the combine controls or display since this document was published. Refer to the combine operator's manual for updates.

WARNING

Check to be sure all bystanders have cleared the area.

1. Position the header 150 mm (6 in.) above the ground, and unlock the float.
2. Check that float lock linkage is on down stops (washer [A] cannot be moved) at both locations.

   NOTE:

   If the header is not on down stops during the next two steps, the voltage may go out of range during operation causing a malfunction of the AHHC system. If the header is not on down stops, refer to *3.10 Leveling the Header, page 348* for instructions.

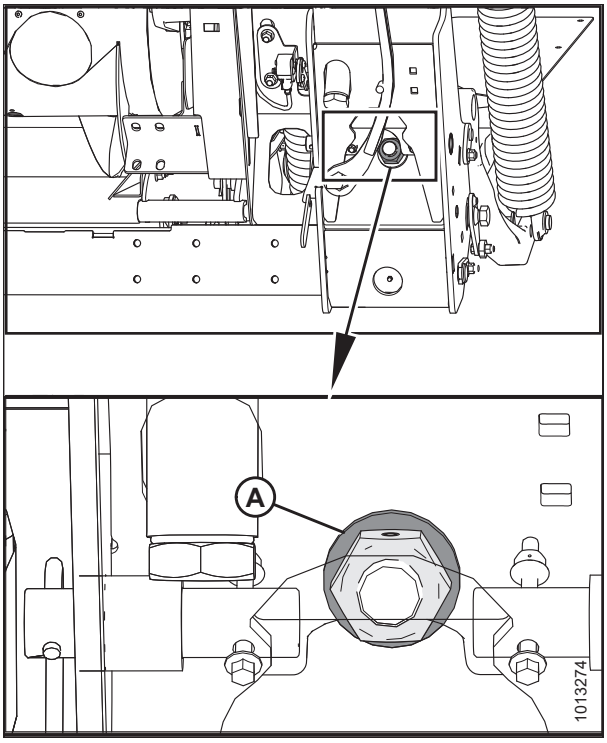

Figure 3.424: Float Lock

3. Adjust cable take-up bracket (B) (if necessary) until float indicator pointer (A) is on **0**.

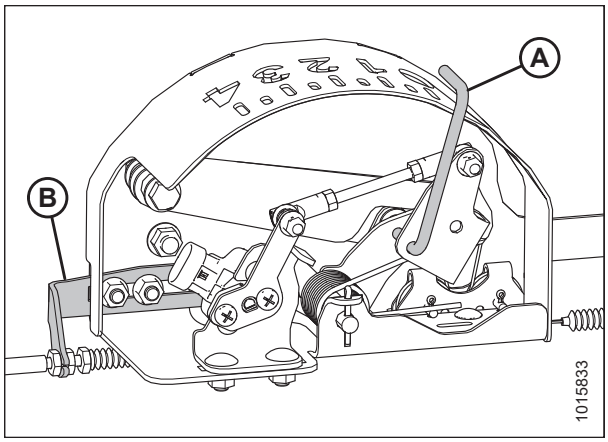

Figure 3.425: Float Indicator Box

Figure 3.426: John Deere Combine Display

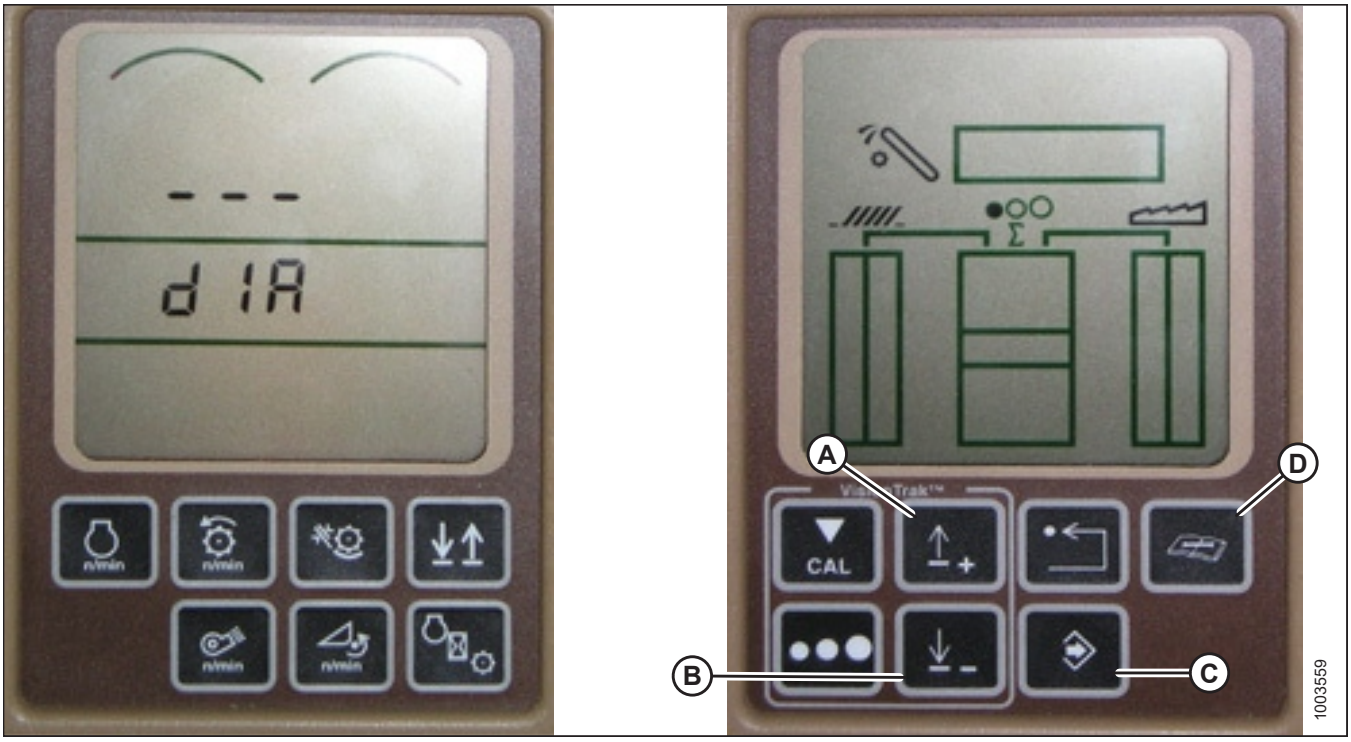

4. Press DIAGNOSTIC button (D) on the monitor—DIA appears on the monitor.
5. Press UP button (A) until EO1 appears on the monitor—this is the header adjustments.
6. Press ENTER button (C).
7. Press the UP (A) or DOWN button (B) until 24 is displayed on the top portion of the monitor—this is the voltage reading for the sensor.
8. Ensure header float is unlocked.
9. Start the combine, and fully lower feeder house to the ground.

   NOTE:

   You may need to hold the HEADER DOWN switch for a few seconds to ensure the feeder house is fully lowered.

10. Check the sensor reading on the monitor. The reading should be above 0.5 V.
11. Raise the header so it is just off the ground. The reading on the monitor should read below 4.5 V.
12. If the sensor voltage is not within the low and high limits or if the range between the low and high limits is insufficient, refer to *Adjusting Voltage Limits – One-Sensor System, page 159*.

Calibrating the Auto Header Height Control – John Deere 60 Series

For best performance of the auto header height control (AHHC), perform these procedures with the center-link set to **D**. When setup and calibration are complete, adjust the center-link back to desired header angle. For instructions, refer to *3.8.4 Header Angle, page 101*.

NOTE:

Changes may have been made to the combine controls or display since this document was published. Refer to the combine operator's manual for updates.

WARNING

Check to be sure all bystanders have cleared the area.

NOTE:

If header float is set too light, it can prevent calibration of AHHC. You may need to set the float heavier for calibration procedure so header doesn't separate from the float module.

1. Ensure center-link is set to **D**.
2. Rest header on down stops, and unlock float.
3. Start the combine.
4. Press the DIAGNOSTIC button (A) on the monitor. DIA appears on the monitor.
5. Press the CAL button (B). DIA-CAL appears on the monitor.

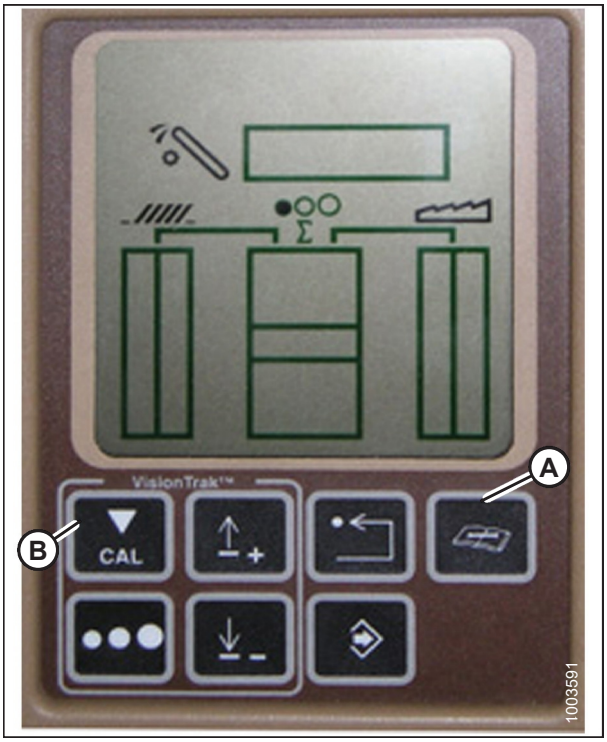

Figure 3.427: John Deere Combine Display

6. Press the UP or DOWN buttons until HDR appears on the monitor.
7. Press the ENTER button. HDR H-DN appears on the monitor.
8. Fully lower feeder house to the ground.

   NOTE:

   You may need to hold the HEADER DOWN switch for a few seconds to ensure the feeder house is fully lowered.

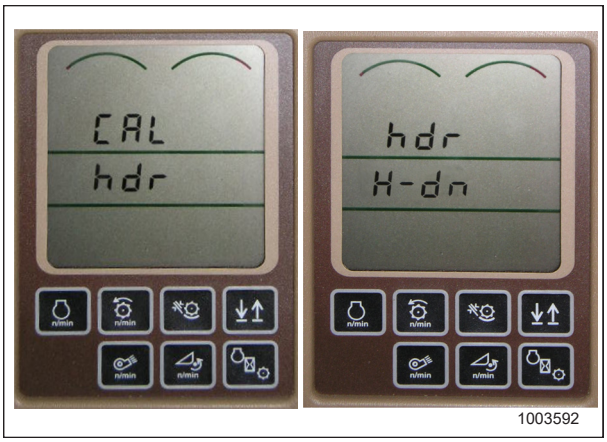

Figure 3.428: John Deere Combine Display

9. Press the CAL button (A) to save the calibration of the header. HDR H-UP appears on the monitor.
10. Raise the header 1 m (3 ft.) off the ground and press the CAL button (A). EOC appears on the monitor.
11. Press the ENTER button (B) to save the calibration of the header. Your AHHC is now calibrated.

    NOTE:

    If an error code appears during calibration, the sensor is out of voltage range and will require adjustment. For instructions, refer to *Checking Voltage Range from the Combine Cab – John Deere 60 Series, page 275*.

    NOTE:

    After the calibration is complete, adjust combine operation settings to ensure proper field operation.

    NOTE:

    If float was set heavier to complete the AHHC calibration procedure, adjust to recommended operating float after the calibration is complete.

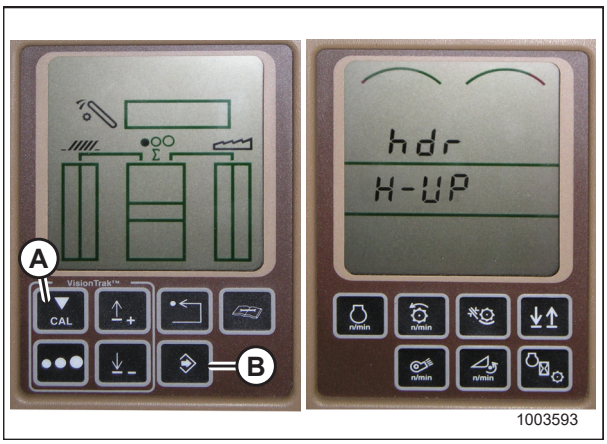

Figure 3.429: John Deere Combine Display

Turning the Accumulator Off – John Deere 60 Series

The accumulator is a hydraulic device that cushions the shock of hydraulic fluid when installing a heavy header onto the combine.

NOTE:

The accumulator should not be used when operating the combine with a D1 and FM100 Float Module attached.

NOTE:

Changes may have been made to the combine controls or display since this document was published. Refer to the combine operator's manual for updates.

1. Press DIAGNOSTIC button (A) on the monitor. DIA appears on the monitor.
2. Press the UP button (B) until EO1 appears on the monitor, and press ENTER (D). This is the header adjustment.
3. Press the UP (B) or DOWN (C) button until 132 is displayed on the top portion of the monitor. This is the reading for the accumulator.
4. Press ENTER (D) to select 132 as the accumulator reading (this will allow you to change the display to a three-digit number so it has a 0 in it, for example, x0x).
5. Press the UP (B) or DOWN (C) button until the desired number is displayed, and press the CAL button (E).
6. Press ENTER (D) to save the changes. The accumulator is now deactivated.

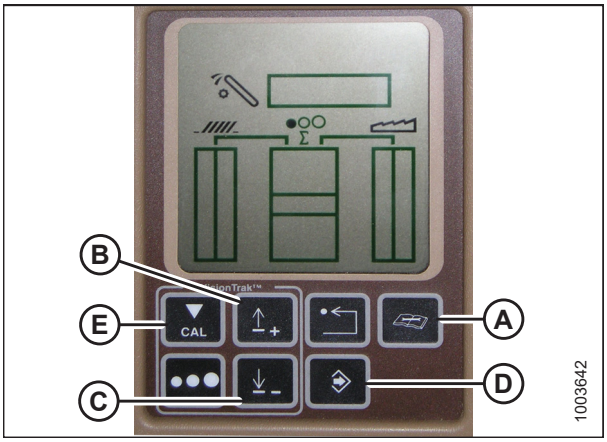

Figure 3.430: John Deere Combine Display

Setting the Sensing Grain Header Height to 50 – John Deere 60 Series

NOTE:

Changes may have been made to the combine controls or display since this document was published. Refer to the combine operator's manual for updates.

To set the sensing grain header height, follow these steps:

1. Press DIAGNOSTIC button (A) on the monitor. DIA appears on the monitor.
2. Press the UP button (B) until EO1 appears on the monitor, and press ENTER (D). This is the header adjustment.
3. Press the UP (B) or DOWN (C) button until 128 is displayed on the top portion of the monitor. This is the reading for the sensor.
4. Press ENTER (D) to select 128 as the sensor reading (this will allow you to change the display to a three-digit number so it has a 50 in it).
5. Press the UP (B) or DOWN (C) button until the desired number is displayed, and press the CAL button (E).
6. Press ENTER (D) to save the changes. The height is now set.

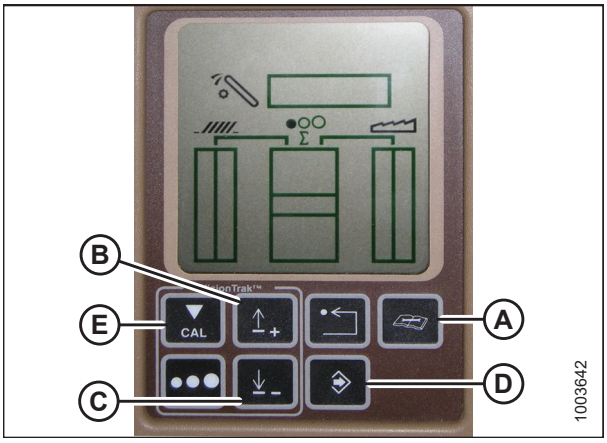

Figure 3.431: John Deere Combine Display

NOTE:

Do **NOT** use the active header float function (A) in combination with the MacDon auto header height control (AHHC)—the two systems will counteract one another. The header symbol (B) on the display should **NOT** have a wavy line under it and should appear exactly as shown on the Active Header Control Display in Figure *3.432, page 280*.

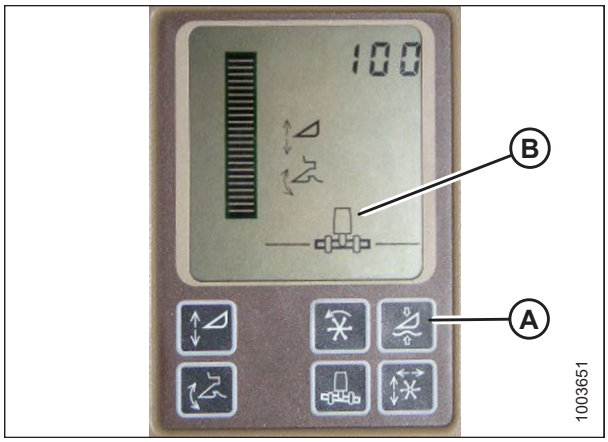

Figure 3.432: John Deere Combine Display

Setting the Sensitivity of the Auto Header Height Control – John Deere 60 Series

The sensitivity adjustment controls the distance the cutterbar must travel up or down before the auto header height control (AHHC) reacts and raises or lowers the feeder house. When the sensitivity is set to maximum, only small changes in ground height are needed to cause the feeder house to raise or lower. When the sensitivity is set to minimum, large changes in the ground height are needed to cause the feeder house to raise or lower.

NOTE:

Changes may have been made to the combine controls or display since this document was published. Refer to the combine operator's manual for updates.

1. Press the DIAGNOSTIC button (A) on the monitor. DIA appears on the monitor.
2. Press the UP button (B) until EO1 appears on the monitor, and press ENTER (D). This is the header adjustment.
3. Press the UP (B) or DOWN (C) button until 112 is displayed on the monitor. This is your sensitivity setting.

   NOTE:

   The lower the reading, the higher the sensitivity. Ideal operating range is typically between 50 and 80.
4. Press ENTER (D) to select 112 as the sensitivity setting (this will allow you to change the first digit of the number sequence).
5. Press UP (B) or DOWN (C) until the desired number is displayed, then press the CAL button (E). This will bring you to the second digit. Repeat this procedure until the desired setting is achieved.
6. Press ENTER (D) to save changes.

   NOTE:

   The numbers shown on the displays in these illustrations are for reference purposes only; they are not intended to represent the specific settings for your equipment.

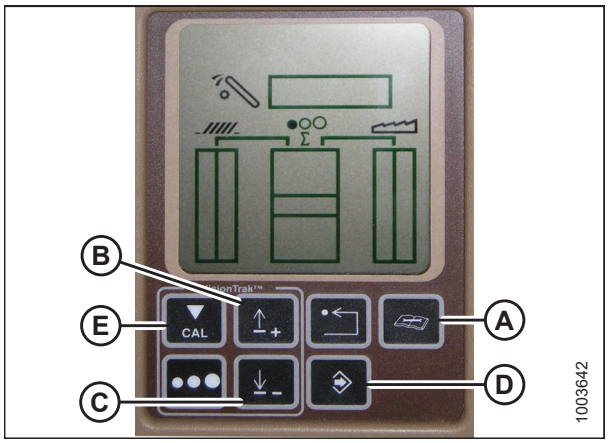

Figure 3.433: John Deere Combine Display

Adjusting the Threshold for the Drop Rate Valve – John Deere 60 Series

This procedure explains how to adjust the point at which the restrictor valve opens allowing full flow to the lift cylinders.

NOTE:

Changes may have been made to the combine controls or display since this document was published. Refer to the combine operator's manual for updates.

NOTE:

The numbers shown on the displays in these illustrations are for reference purposes only; they are not intended to represent the specific settings for your equipment.

1. Press DIAGNOSTIC button (A) on the monitor. DIA appears on the monitor.
2. Press the UP button (B) until EO1 appears on the monitor and press ENTER (C). This is the header adjustment.
3. Press the UP (B) or DOWN button until 114 is displayed on the top portion of the monitor. This is the setting that adjusts when the fast drop rate starts with respect to the dead band.

   NOTE:

   The default setting is 100. Ideal operating range is typically between 60 and 85.
4. Press ENTER (C) to select 114 as the fast drop rate (this will allow you to change the first digit of the number sequence).
5. Press UP (A) or DOWN (B) until the desired number is displayed, then press the CAL button (C). This will bring you to the second digit. Repeat this procedure until the desired setting is achieved.
6. Press ENTER (D) to save changes.

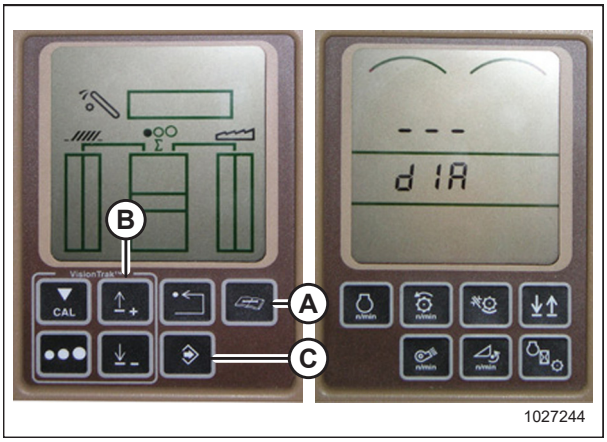

Figure 3.434: John Deere Combine Display

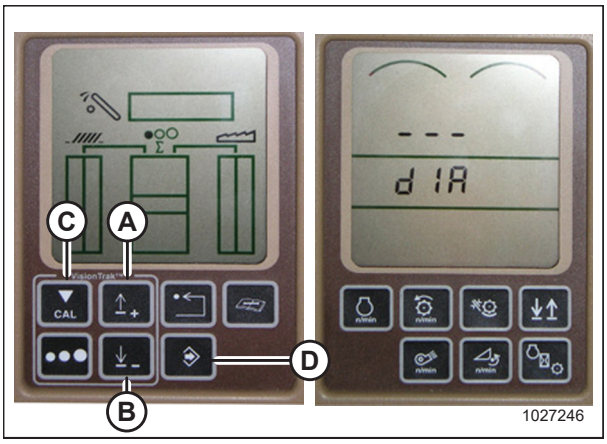

Figure 3.435: John Deere Combine Display

3.9.15 John Deere 70 Series Combines

Checking Voltage Range from the Combine Cab – John Deere 70 Series

NOTE:

Changes may have been made to the combine controls or display since this document was published. Refer to the combine operator's manual for updates.

WARNING

Check to be sure all bystanders have cleared the area.

1. Position the header 150 mm (6 in.) above the ground, and unlock the float.
2. Check that float lock linkage is on down stops (washer [A] cannot be moved) at both locations.

   NOTE:

   If the header is not on down stops during the next two steps, the voltage may go out of range during operation causing a malfunction of the AHHC system. If the header is not on down stops, refer to *3.10 Leveling the Header, page 348* for instructions.

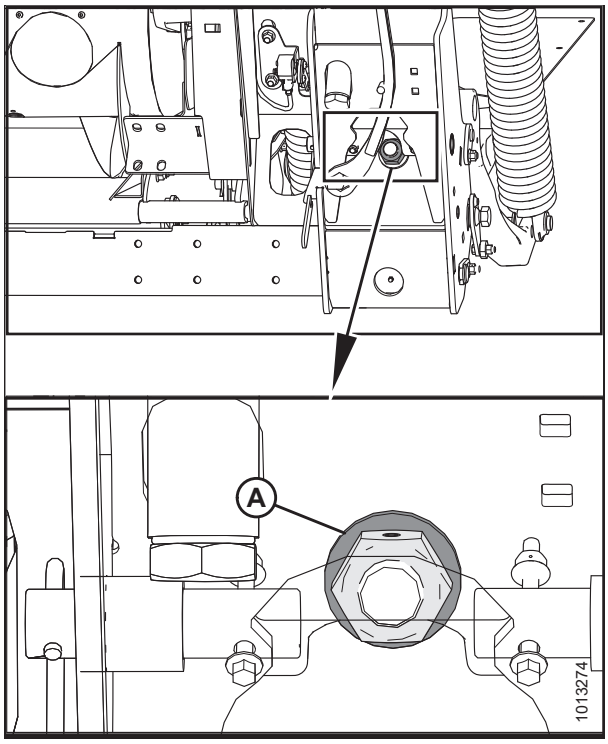

Figure 3.436: Float Lock

3. Adjust cable take-up bracket (B) (if necessary) until pointer (A) on the float indicator is on 0.

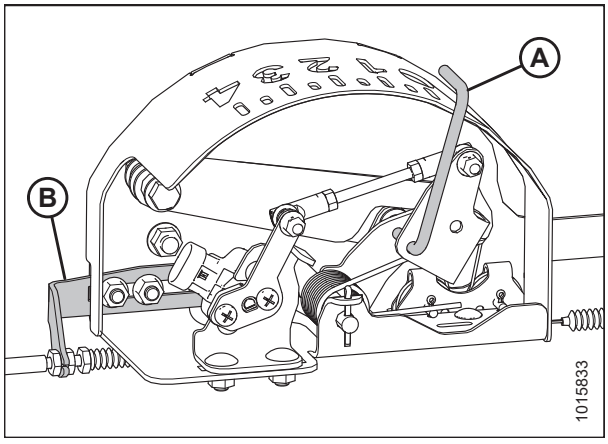

Figure 3.437: Float Indicator Box

4. Press HOME PAGE button (A) on the main screen of the monitor.



Figure 3.438: John Deere Combine Display

5. Ensure three icons (A) shown in the illustration at right appear on the monitor.



Figure 3.439: John Deere Combine Display

6. Use scroll knob (A) to highlight the middle icon (the green i) and press check mark button (B) to select it. This will bring up the Message Center.

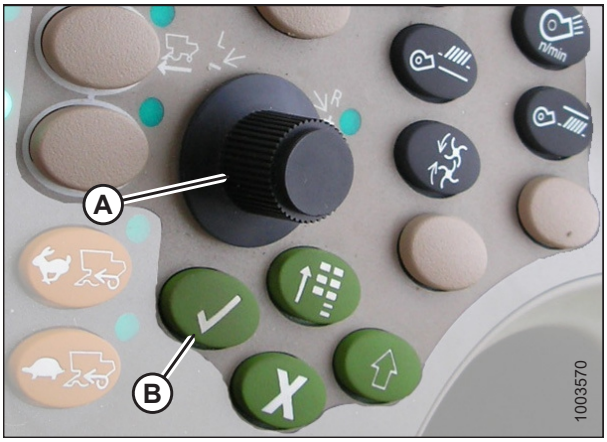

Figure 3.440: John Deere Combine Control Console

7. Use the scroll knob to highlight DIAGNOSTIC ADDRESSES (A) from the right column and select it by pressing the check mark button.
8. Use the scroll knob to highlight drop-down box (B) and press the check mark button to select it.

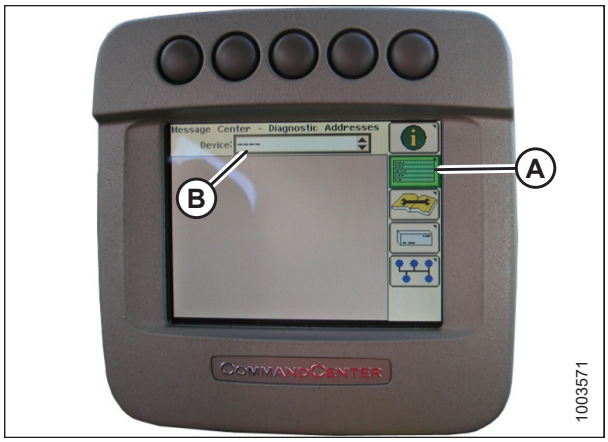

Figure 3.441: John Deere Combine Display

9. Use the scroll knob to highlight LC 1.001 VEHICLE (A) and press the check mark button to select it.



Figure 3.442: John Deere Combine Display

10. Use the scroll knob to highlight down arrow (A) and press the check mark button to scroll through the list until 029 DATA (B) is displayed and voltage reading (C) appears on the monitor.

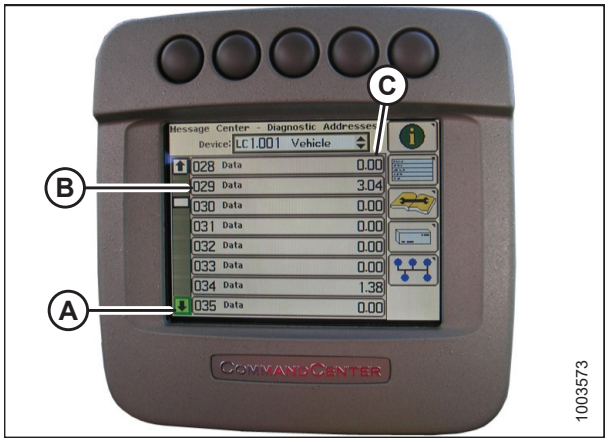

Figure 3.443: John Deere Combine Display

11. Ensure header float is unlocked.
12. Start the combine and fully lower feeder house to the ground.

    NOTE:

    You may need to hold the HEADER DOWN switch for a few seconds to ensure the feeder house is fully lowered.

13. Check the sensor reading on the monitor.
14. Raise the header so it is just off the ground and recheck the sensor reading.
15. If the sensor voltage is not within the low and high limits or if the range between the low and high limits is insufficient, refer to *Adjusting Voltage Limits – One-Sensor System, page 159*.

Calibrating Feeder House Speed – John Deere 70 Series

The feeder house speed must be calibrated before you calibrate the auto header height control (AHHC) system. For instructions, refer to the combine operator's manual.

Calibrating the Auto Header Height Control – John Deere 70 Series

For best performance of the auto header height control (AHHC), perform these procedures with the center-link set to **D**. When setup and calibration are complete, adjust the center-link back to desired header angle. For instructions, refer to *3.8.4 Header Angle, page 101*.

NOTE:

Changes may have been made to the combine controls or display since this document was published. Refer to the combine operator's manual for updates.

WARNING

Check to be sure all bystanders have cleared the area.

NOTE:

If header float is set too light, it can prevent calibration of AHHC. You may need to set the float heavier for calibration procedure so header doesn't separate from the float module.

1. Ensure center-link is set to **D**.
2. Rest header on down stops and unlock float.
3. Start the combine.
4. Press the button located fourth from the left along the top of monitor (A) to select the icon that resembles an open book with a wrench on it (B).
5. Press top button (A) a second time to enter diagnostics and calibration mode.

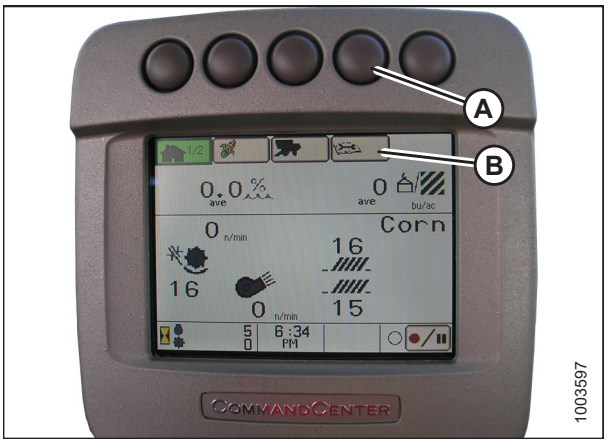

Figure 3.444: John Deere Combine Display

6. Select HEADER in box (A) by scrolling down to the box using the scroll knob, and then pressing the check mark button (knob and button are shown in Figure *3.446, page 286*).
7. Scroll down to the lower right icon that resembles an arrow in a diamond (B) and press the check mark button to select it.

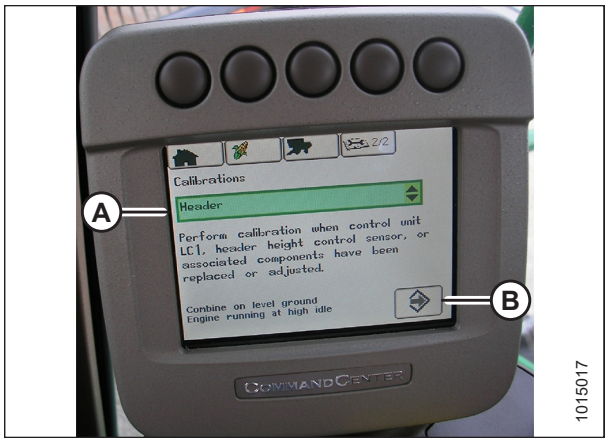

Figure 3.445: John Deere Combine Display

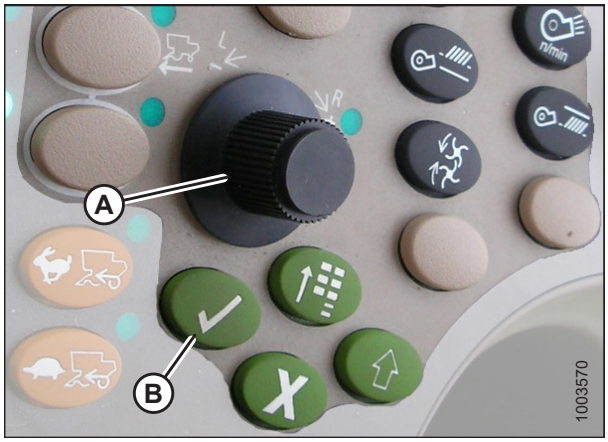

Figure 3.446: John Deere Combine Control Console

A - Scroll Knob **B - Check Mark Button**

8. Follow the steps listed on the monitor to perform the calibration.

NOTE:

If an error code appears on screen, the sensor is not in the correct working range. For instructions, refer to *Checking Voltage Range from the Combine Cab – John Deere S and T Series, page 289* to check and adjust the range.

NOTE:

If float was set heavier to complete the AHHC calibration procedure, adjust to recommended operating float after the calibration is complete.

Setting the Sensitivity of the Auto Header Height Control – John Deere 70 Series

The sensitivity adjustment controls the distance the cutterbar must travel up or down before the auto header height control (AHHC) reacts and raises or lowers the feeder house. When the sensitivity is set to maximum, only small changes in ground height are needed to cause the feeder house to raise or lower. When the sensitivity is set to minimum, large changes in the ground height are needed to cause the feeder house to raise or lower.

NOTE:

Changes may have been made to the combine controls or display since this document was published. Refer to the combine operator's manual for updates.

1. Press button (A) twice and the current sensitivity setting will appear on the monitor (the lower the reading, the lower the sensitivity).
2. Use scroll knob (B) to adjust the sensitivity setting. The adjustment will be saved automatically.

   NOTE:

   If the screen remains idle for a short period of time, it will automatically return to the previous screen. Pressing check mark button (C) also will return the monitor to the previous screen.

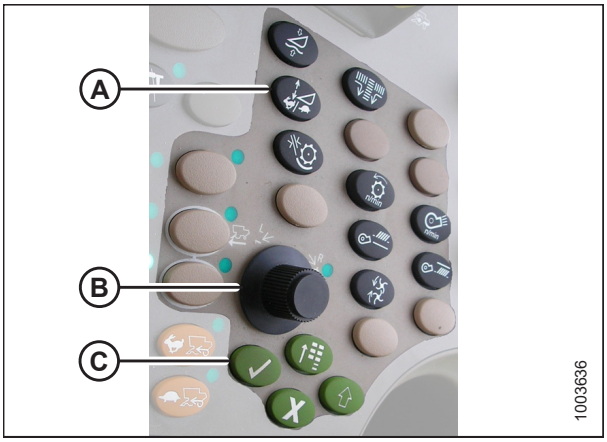

Figure 3.447: John Deere Combine Control Console

NOTE:

The numbers shown on the displays in these illustrations are for reference purposes only; they are not intended to represent the specific settings for your equipment.



Figure 3.448: John Deere Combine Display

Adjusting the Manual Header Raise/Lower Rate – John Deere 70 Series

The weight of the header will dictate the rate at which the header can be raised or lowered during operation.

To manually adjust the header raise/lower rate, do the following steps:

NOTE:

Changes may have been made to the combine controls or display since this document was published. Refer to the combine operator's manual for updates.

1. Press button (A) and the current raise/lower rate setting will appear on the monitor (the lower the reading, the slower the rate).
2. Use scroll knob (B) to adjust the rate. The adjustment will be saved automatically.

   NOTE:

   If the screen remains idle for a short period of time, it will automatically return to the previous screen. Pressing check mark button (C) will also return the monitor to the previous screen.

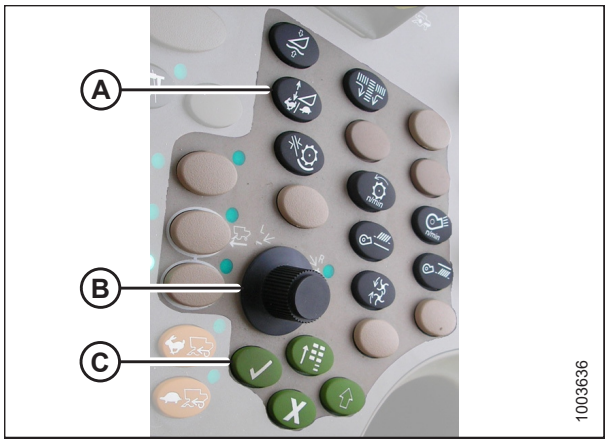

Figure 3.449: John Deere Combine Control Console

NOTE:

The numbers shown on the displays in these illustrations are for reference purposes only; they are not intended to represent the specific settings for your equipment.



Figure 3.450: John Deere Combine Display

3.9.16 John Deere S and T Series Combines

Checking Voltage Range from the Combine Cab – John Deere S and T Series

NOTE:

Changes may have been made to the combine controls or display since this document was published. Refer to the combine operator's manual for updates.

WARNING

Check to be sure all bystanders have cleared the area.

1. Position the header 150 mm (6 in.) above the ground, and unlock the float.
2. Check that float lock linkage is on down stops (washer [A] cannot be moved) at both locations.

   NOTE:

   If the header is not on down stops during the next two steps, the voltage may go out of range during operation causing a malfunction of the AHHC system. If the header is not on down stops, refer to *3.10 Leveling the Header, page 348* for instructions.

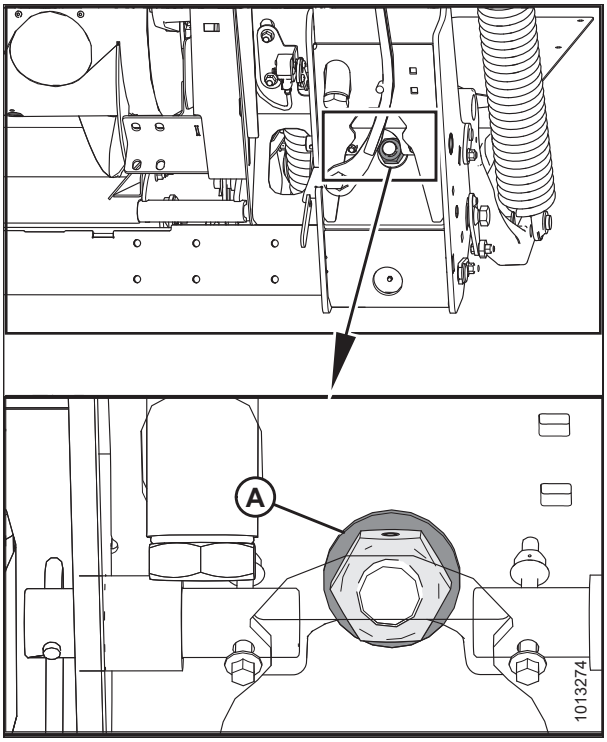

Figure 3.451: Float Lock

3. Adjust cable take-up bracket (B) (if necessary) until pointer (A) on the float indicator is on 0.

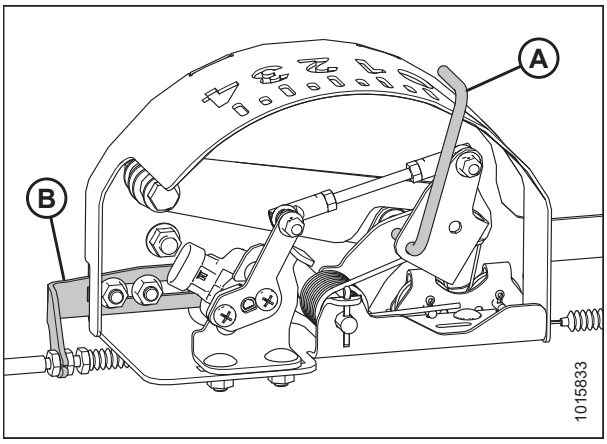

Figure 3.452: Float Indicator Box

4. Press CALIBRATION icon (A) on the main screen of the monitor. The CALIBRATION screen appears.



Figure 3.453: John Deere Combine Display

5. Press DIAGNOSTIC READINGS icon (A) on the CALIBRATION screen. The DIAGNOSTIC READINGS screen appears. This screen provides access to calibrations, header options, and diagnostic information.

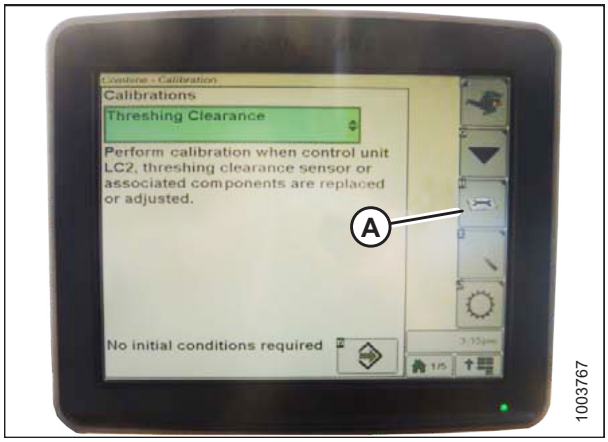

Figure 3.454: John Deere Combine Display

6. Select AHHC RESUME (A) and a list of calibration options appears.



Figure 3.455: John Deere Combine Display

7. Select the AHHC SENSING option.
8. Press icon (A) displayed on screen. The AHHC SENSING menu appears and five screens of information are displayed.



Figure 3.456: John Deere Combine Display

9. Press icon (A) until it reads Page 5 near the top of the screen and the following sensor readings appear:
   - LEFT HEADER HEIGHT
   - CENTER HEADER HEIGHT
   - RIGHT HEADER HEIGHT

   A reading is displayed for both left and right sensors. On the MacDon header, there may be one sensor located in the float indicator box (standard) or two sensors located at the back of the float module side frame (optional).

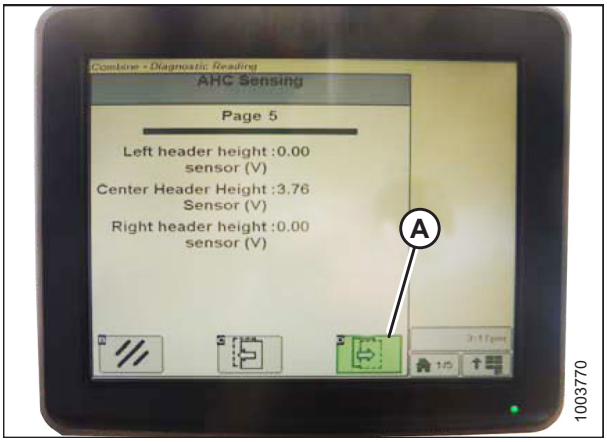

Figure 3.457: John Deere Combine Display

10. Ensure header float is unlocked.
11. Start the combine and fully lower feeder house to the ground.

    NOTE:

    You may need to hold the HEADER DOWN switch for a few seconds to ensure the feeder house is fully lowered.
12. Check the sensor reading on the monitor.
13. If the sensor voltage is not within the low and high limits or if the range between the low and high limits is insufficient, refer to *Adjusting Voltage Limits – One-Sensor System, page 159*.

Calibrating the Auto Header Height Control – John Deere S and T Series

For best performance of the auto header height control (AHHC), perform these procedures with the center-link set to **D**. When setup and calibration are complete, adjust the center-link back to desired header angle. For instructions, refer to *3.8.4 Header Angle, page 101*.

NOTE:

Changes may have been made to the combine controls or display since this document was published. Refer to the combine operator's manual for updates.

NOTE:

If header float is set too light, it can prevent calibration of AHHC. You may need to set the float heavier for calibration procedure so header doesn't separate from the float module.

1. Ensure center-link is set to **D**.
2. Rest header on down stops and unlock float.
3. Press DIAGNOSTIC icon (A) on the main screen of the monitor. The CALIBRATION screen appears.



Figure 3.458: John Deere Combine Display

4. Select THRESHING CLEARANCE (A) and a list of calibration options appears.

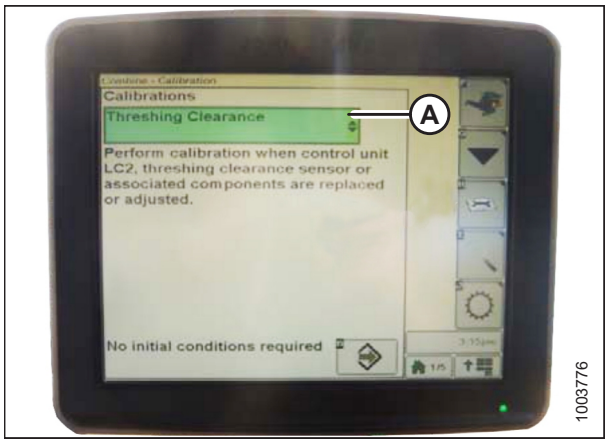

Figure 3.459: John Deere Combine Display

5. Select FEEDER HOUSE SPEED (A) from the list of calibration options.

   NOTE:

   Feeder house speed calibration must be done before header calibration.

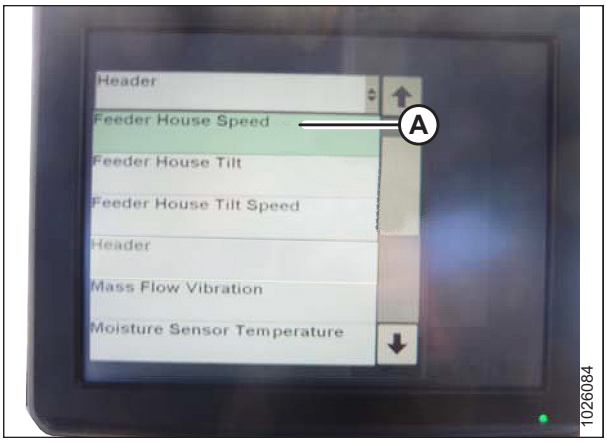

Figure 3.460: John Deere Combine Display

6. With FEEDER HOUSE SPEED selected, press icon (A). The icon will turn green.

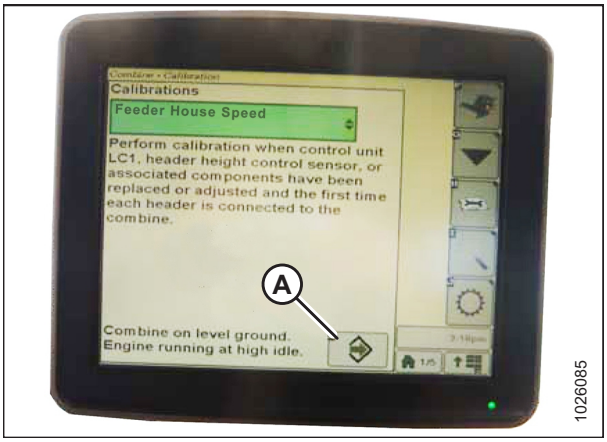

Figure 3.461: John Deere Combine Display

7. Press icon (A) and instructions will appear on screen to guide you through the remaining calibration steps.

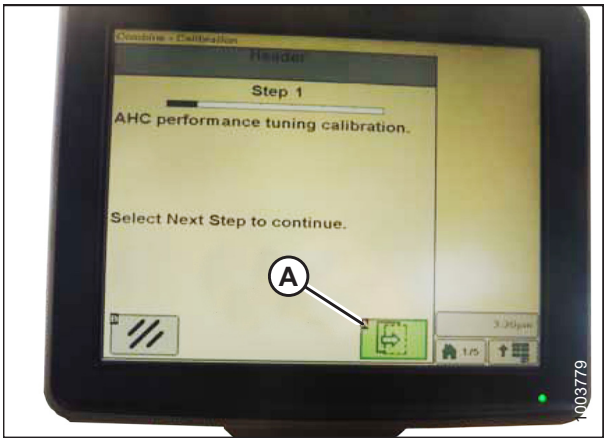

Figure 3.462: John Deere Combine Display

8. Select HEADER (A) from the list of calibration options.

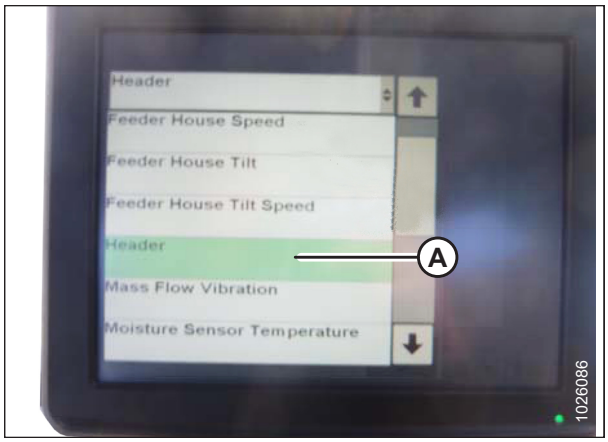

Figure 3.463: John Deere Combine Display

9. With HEADER selected, press icon (A). The icon will turn green.

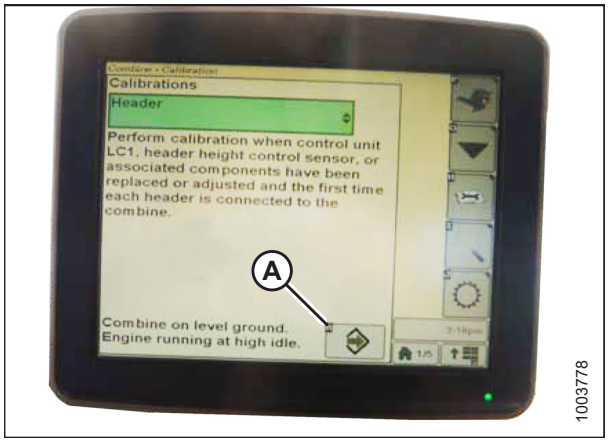

Figure 3.464: John Deere Combine Display

10. Press icon (A) and instructions will appear on screen to guide you through the remaining calibration steps.

    NOTE:

    If an error code appears during calibration, the sensor is out of voltage range and will require adjustment. For instructions, refer to *Checking Voltage Range from the Combine Cab – John Deere S and T Series, page 289*.

    NOTE:

    If float was set heavier to complete the AHHC calibration procedure, adjust to recommended operating float after the calibration is complete.

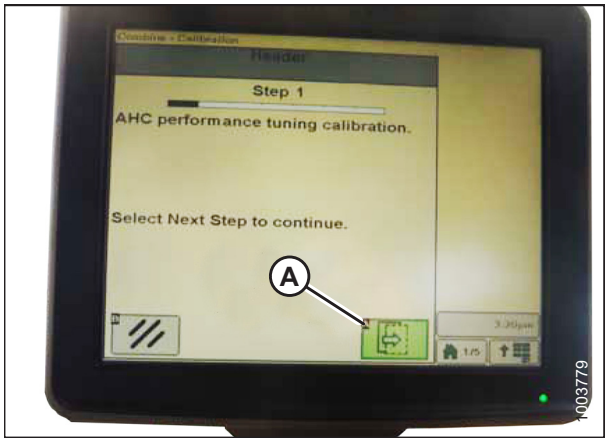

Figure 3.465: John Deere Combine Display

Setting the Sensitivity of the Auto Header Height Control – John Deere S and T Series

The sensitivity adjustment controls the distance the cutterbar must travel up or down before the auto header height control (AHHC) reacts and raises or lowers the feeder house. When the sensitivity is set to maximum, only small changes in ground height are needed to cause the feeder house to raise or lower. When the sensitivity is set to minimum, large changes in the ground height are needed to cause the feeder house to raise or lower.

NOTE:

Changes may have been made to the combine controls or display since this document was published. Refer to the combine operator's manual for updates.

1. Press button (A) twice and the current sensitivity setting will appear on the monitor.



Figure 3.466: John Deere Combine Command Center

2. Press **–** or **+** icons (A) to adjust rates.

   NOTE:

   The numbers shown on the combine display in this illustration are for reference purposes only; they are not intended to represent the specific settings for your equipment.

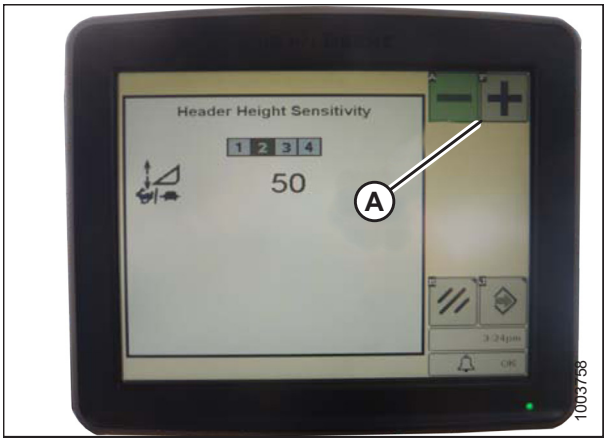

Figure 3.467: John Deere Combine Display

Adjusting the Manual Header Raise/Lower Rate – John Deere S and T Series

NOTE:

Changes may have been made to the combine controls or display since this document was published. Refer to the combine operator's manual for updates.

NOTE:

Indicator (A) should be at position 0 (B) with the header 152 mm (6 in.) off the ground. If not, the float sensor output voltage should be checked; refer to Step *5, page 154*. When the header is on the ground, the indicator should be at position 1 (C) for low ground pressure, and at position 4 (D) for high ground pressure. Crop and soil conditions determine the amount of float to use. The ideal setting is as light as possible without header bouncing or missing crop. Operating with heavy settings prematurely wears the cutterbar wearplates.

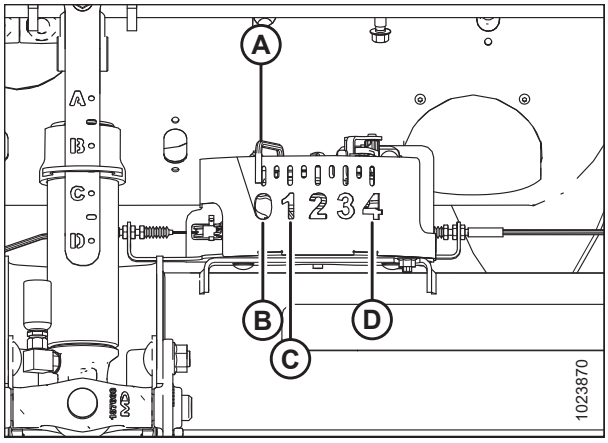

Figure 3.468: Float Indicator Box

1. Press button (A) and the current sensitivity setting will appear on the monitor.



Figure 3.469: John Deere Combine Command Center

2. Press **–** or **+** icons (A) to adjust rates.

   NOTE:

   The numbers shown on the combine display in this illustration are for reference purposes only; they are not intended to represent the specific settings for your equipment.

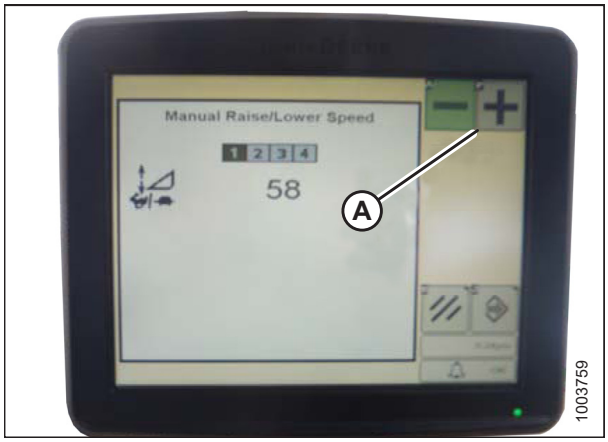

Figure 3.470: John Deere Combine Display

Setting Preset Cutting Height – John Deere S and T Series

NOTE:

Changes may have been made to the combine controls or display since this document was published. Refer to the combine operator's manual for updates.

NOTE:

Indicator (A) should be at position 0 (B) with the header (152 mm [6 in.]) off the ground. If not, the float sensor output voltage should be checked. Refer to Step *5, page 154*. When the header is on the ground, the indicator should be at position 1 (C) for low ground pressure, and at position 4 (D) for high ground pressure. Crop and soil conditions determine the amount of float to use. The ideal setting is as light as possible without header bouncing or missing crop. Operating with heavy settings prematurely wears the cutterbar wearplates.

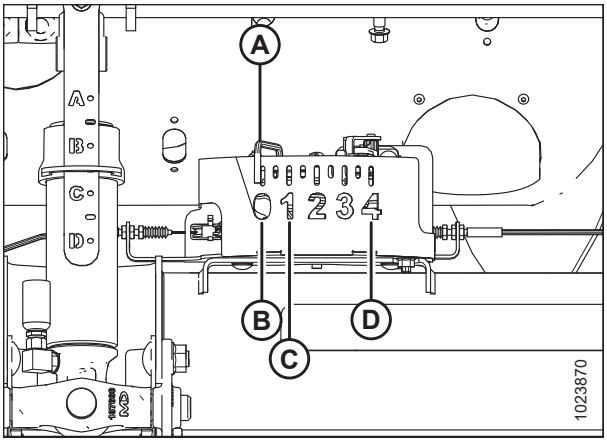

Figure 3.471: Float Indicator Box

1. Press COMBINE – HEADER SETUP icon (A) on the main screen. The COMBINE – HEADER SETUP screen appears. This screen is used to set various header settings such as reel speed, header width, and height of feeder house for acre counter engagement.



Figure 3.472: Combine Display

2. Select COMBINE – HEADER SETUP AHC icon (A). The COMBINE – HEADER SETUP AHC screen appears.



Figure 3.473: Combine Display

3. Select AUTO HEIGHT SENSING (A), RETURN TO CUT (B), and REEL POSITION (C) icons.

   NOTE:

   If REEL POSITION icon (C) cannot be selected (no check mark), the reel height sensor requires calibration. For instructions, refer to *Calibrating Reel Height Sensor – John Deere S and T Series, page 306*.

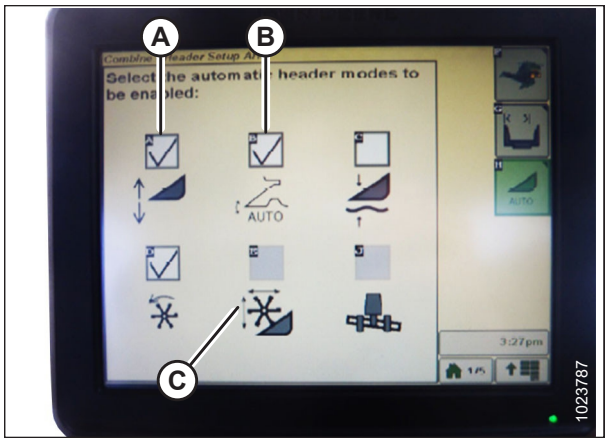

Figure 3.474: Combine Display

4. Engage the header.
5. Move the header to the desired position and use knob (A) to fine tune the position.
6. Move the reel to the desired position.



Figure 3.475: Combine Control Console

7. Press and hold preset switch 2 (B) until 1 reel height icon flashes on monitor.
8. Repeat previous three steps for preset switch 3 (C).
9. Select an appropriate ground pressure setting. Use preset button 2 (B) on the control handle for a low ground pressure setting in muddy or soft soil conditions, and preset 3 (C) for a high ground pressure setting in firm soil conditions and a higher ground speed.

   NOTE:

   Preset button 1 (A) is reserved for header lift on the headland and is not used for cutting on ground.



Figure 3.476: Control Handle Buttons

NOTE:

When the AHHC is engaged, AHHC icon (A) appears on the monitor and the number indicating which button was pressed (B) is displayed on the screen.

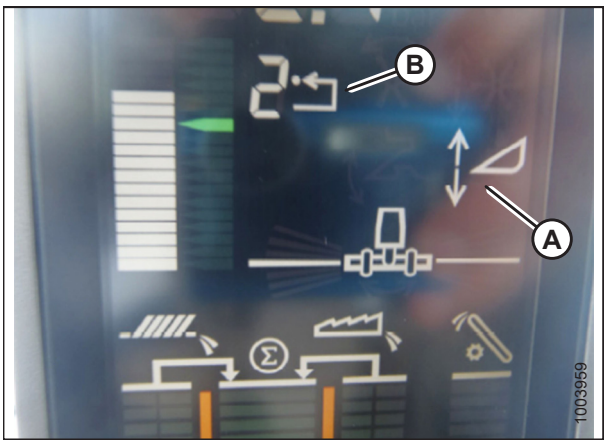

Figure 3.477: Combine Display

Calibrating Feeder House Fore-Aft Tilt Range – John Deere S and T Series

For best performance of the auto header height control (AHHC), perform these procedures with the center-link set to **D**. When setup and calibration are complete, adjust the center-link back to desired header angle. For instructions, refer to *3.8.4 Header Angle, page 101*.

This procedure applies only to model year 2015 and later John Deere S and T Series combines.

NOTE:

Changes may have been made to the combine controls or display since this document was published. Refer to the combine operator's manual for updates.

The feeder house fore/aft tilt is controlled by buttons (C) and (D) at the back of the control handle.

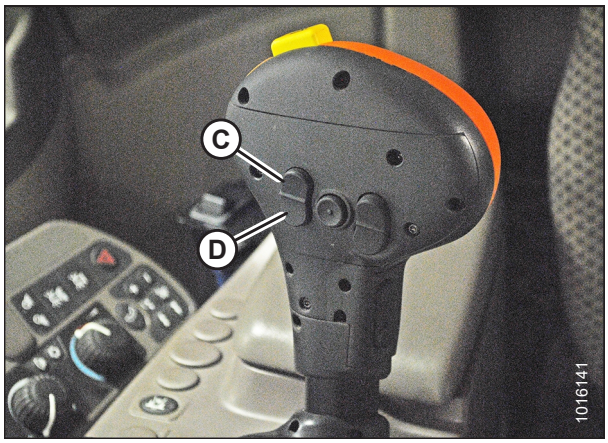

Figure 3.478: John Deere Control Handle

NOTE:

The feeder house fore/aft tilt controls can be changed to work with buttons E and F by pressing control handle icon (A) and then selecting FEEDER HOUSE FORE/AFT TILT from drop-down menu (B).

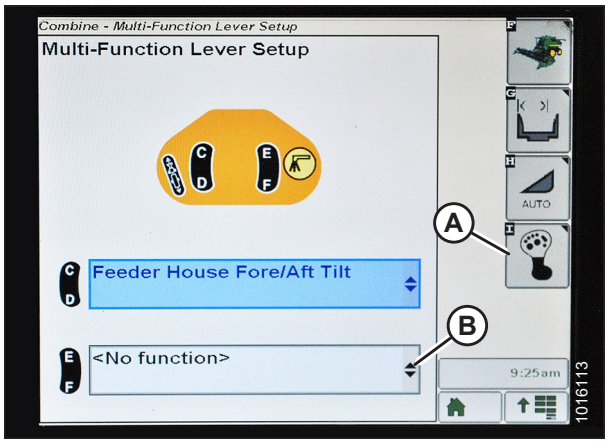

Figure 3.479: John Deere Combine Display

To calibrate the feeder house fore-aft tilt range, follow these steps:

1. Ensure center-link is set to **D**.
2. Rest header on down stops and unlock float.
3. Press DIAGNOSTIC icon (A) on the main screen of the monitor. The CALIBRATION screen displays.

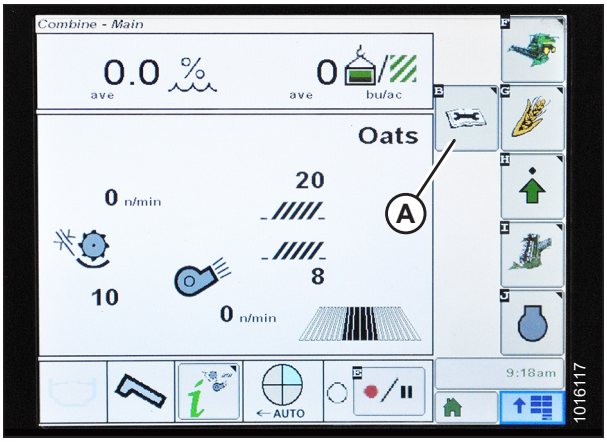

Figure 3.480: John Deere Combine Display

4. Select CALIBRATIONS drop-down menu (A) to view the list of calibration options.

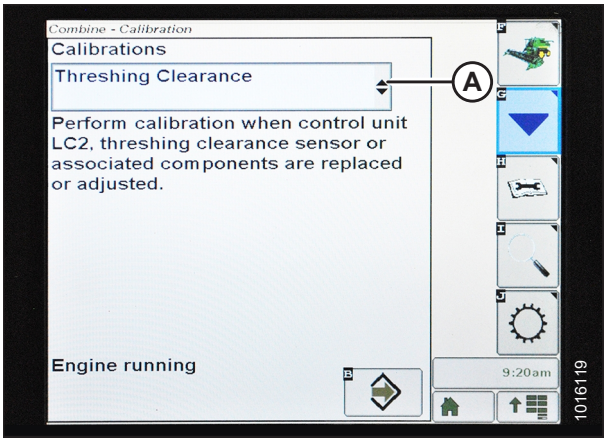

Figure 3.481: John Deere Combine Display

5. Press arrow (A) to cycle up through the calibration options and select FEEDER HOUSE FORE/AFT TILT RANGE.

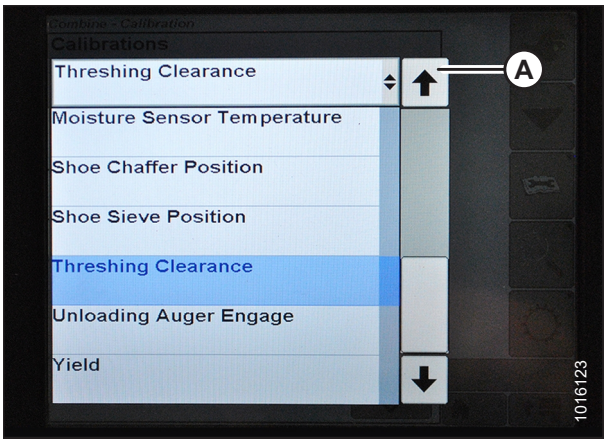

Figure 3.482: John Deere Combine Display

6. Press ENTER icon (A).

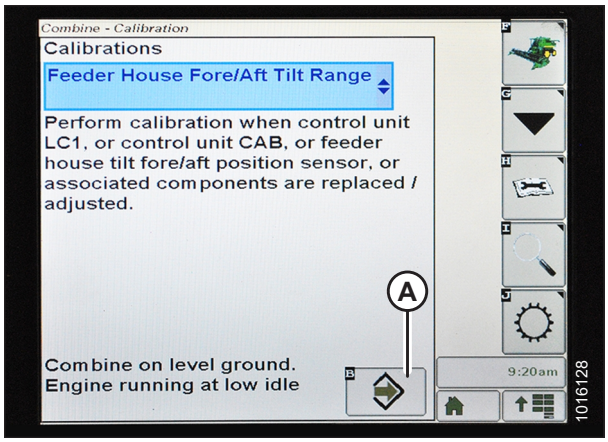

Figure 3.483: John Deere Combine Display

7. Follow the instructions that appear on the screen. As you proceed through the calibration process, the display will automatically update to show the next step.

   NOTE:

   If an error code appears during calibration, the sensor is out of voltage range and will require adjustment. For instructions, refer to *Checking Voltage Range from the Combine Cab – John Deere S and T Series, page 289*.

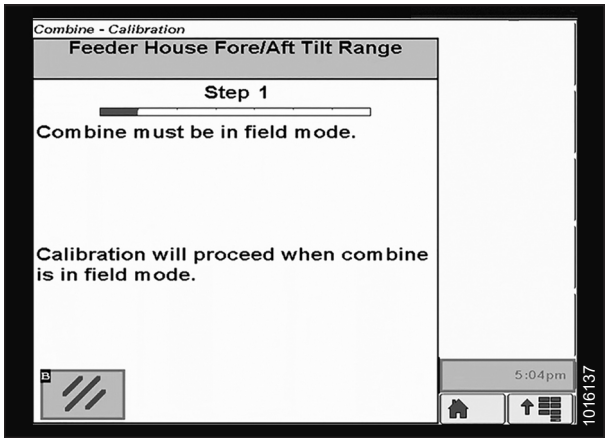

Figure 3.484: John Deere Combine Display

Checking Reel Height Sensor Voltages – John Deere S and T Series

NOTE:

Changes may have been made to the combine controls or display since this document was published. Refer to the combine operator's manual for updates.

1. Press CALIBRATION icon (A) on the main screen of the monitor. The CALIBRATION screen appears.

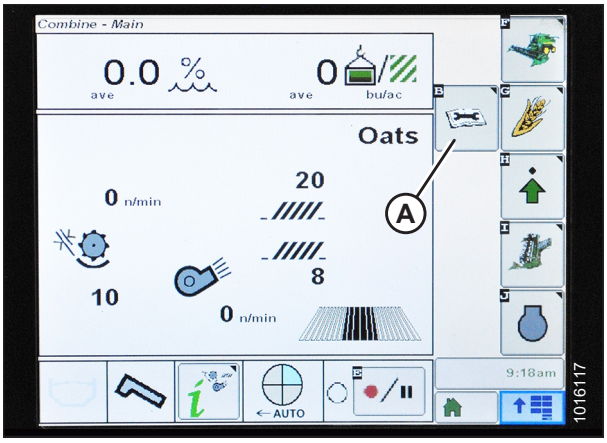

Figure 3.485: John Deere Combine Display

2. Press DIAGNOSTIC READINGS icon (A) on the CALIBRATION screen. The DIAGNOSTIC READINGS screen appears. This screen provides access to calibrations, header options, and diagnostic information.

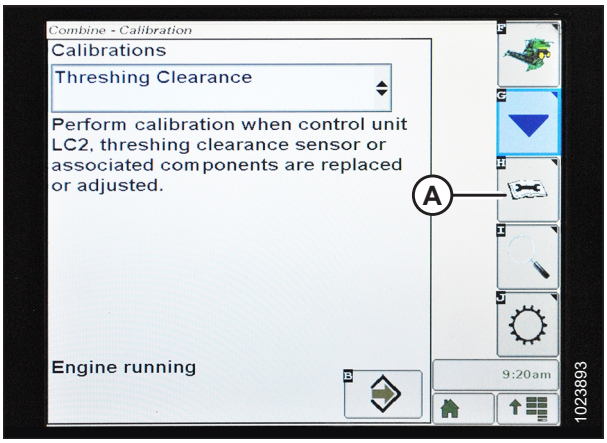

Figure 3.486: John Deere Combine Display

3. Select drop-down menu (A) to view the list of calibration options.

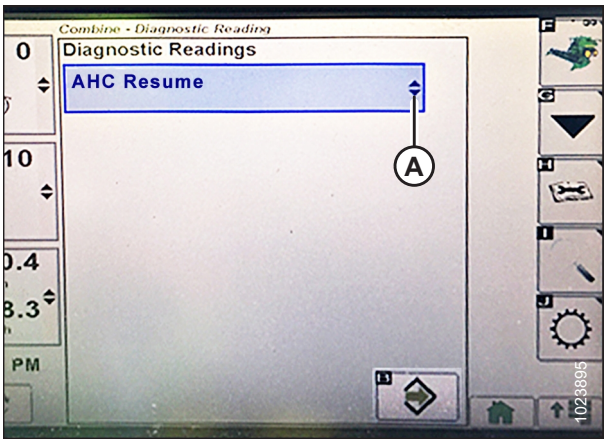

Figure 3.487: John Deere Combine Display

4. Scroll down and select REEL RESUME (A).

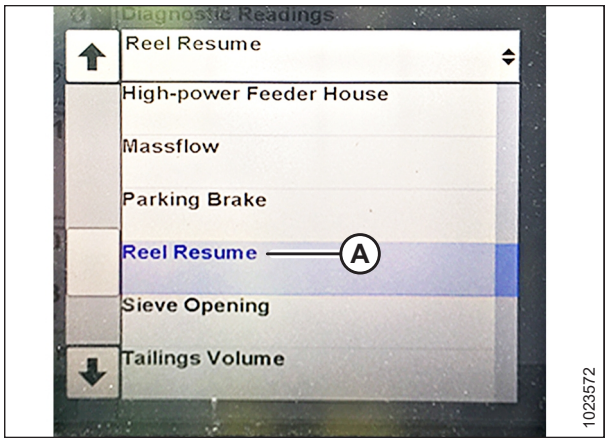

Figure 3.488: John Deere Combine Display

5. Press ENTER icon (A). The REEL RESUME page displays.

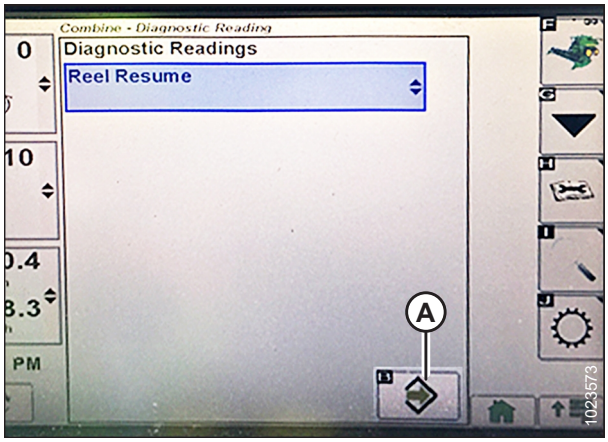

Figure 3.489: John Deere Combine Display

6. Press NEXT PAGE icon (A) to cycle to page 3.
7. Lower the reel to view low voltage (B). The voltage should be 0.5–0.9 V.

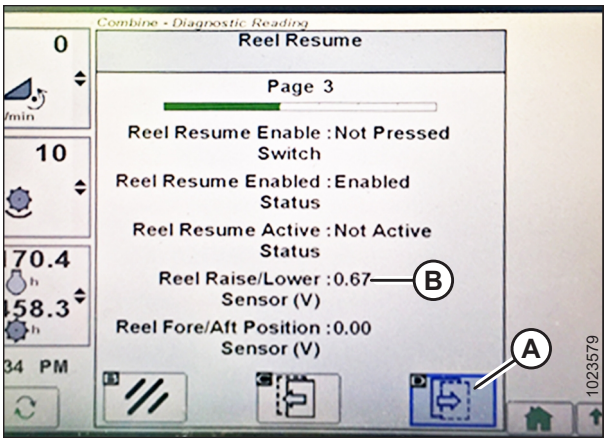

Figure 3.490: John Deere Combine Display

8. Raise the reel to view high voltage (A). The voltage should be 4.1–4.5 V.
9. If either voltage is not within the correct range, refer to *Checking and Adjusting Reel Height Sensor, page 118*s not within the correct range, refer to.

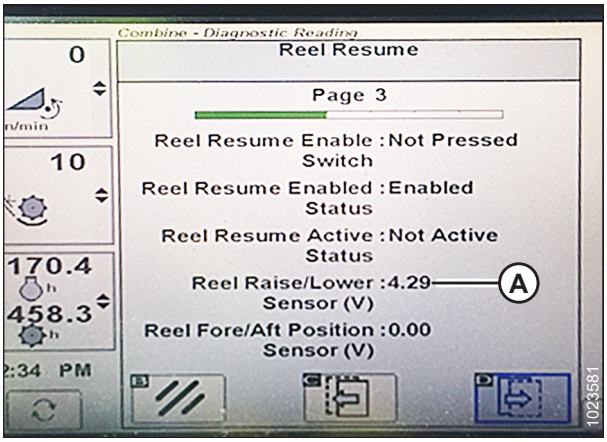

Figure 3.491: John Deere Combine Display

Calibrating Reel Height Sensor – John Deere S and T Series

This procedure applies only to model year 2015 and later John Deere S and T Series combines.

NOTE:

Changes may have been made to the combine controls or display since this document was published. Refer to the combine operator's manual for updates.

To calibrate reel height, follow these steps:

1. Place header off the ground 15–25 cm (6–10 in.).

   IMPORTANT:

   Do **NOT** turn off the engine. The combine has to be at full idle for the sensors to calibrate properly.

2. Press DIAGNOSTIC icon (A) on the main screen of the monitor. The CALIBRATION screen displays.

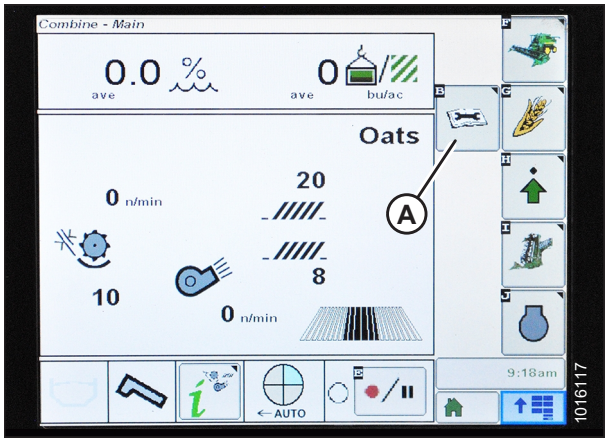

Figure 3.492: John Deere Combine Display

3. Select CALIBRATIONS drop-down menu (A) to view the list of calibration options.
4. Scroll through the list of options and select REEL POSITION.
5. Press ENTER icon (B).

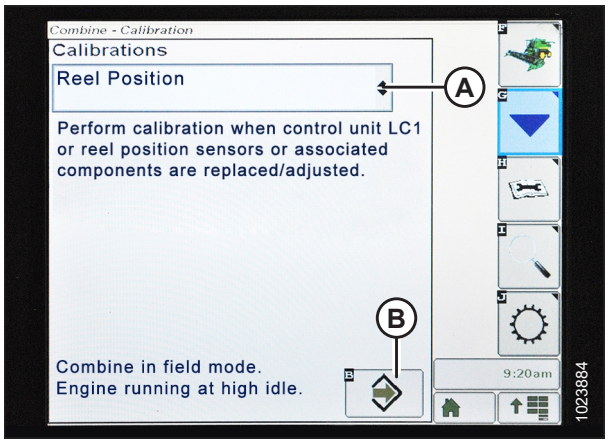

Figure 3.493: John Deere Combine Display

6. Follow the instructions that appear on the screen. As you proceed through the calibration process, the display will automatically update to show the next step. This calibration requires you to use reel raise (A) and reel lower (B) switches on the control handle.



Figure 3.494: John Deere Control Handle

7. Press and hold REEL LOWER switch until reel is fully lowered. Continue holding REEL LOWER switch until prompted by the display.

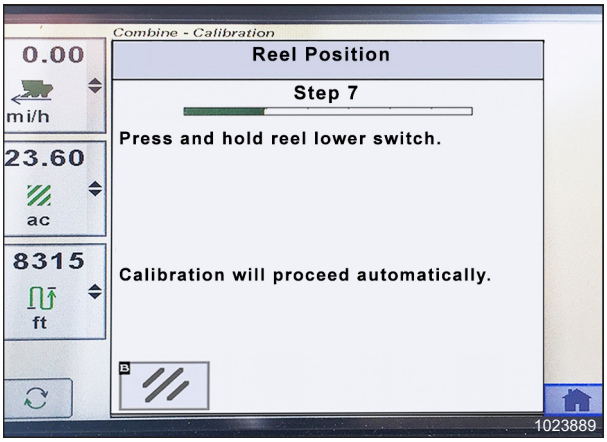

Figure 3.495: John Deere Combine Display

8. Press and hold REEL RAISE switch until reel is fully raised. Continue holding REEL RAISE switch until prompted by the display.

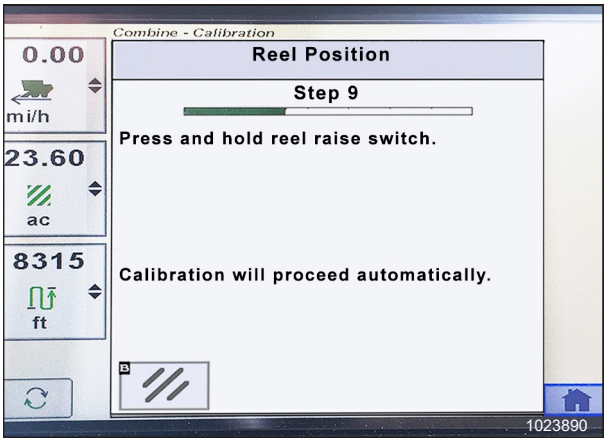

Figure 3.496: John Deere Combine Display

9. When all steps have been completed, CALIBRATION COMPLETE message is displayed on the screen. Exit the CALIBRATION menu by pressing ENTER icon (A).

   NOTE:

   If an error code appears during calibration, the sensor is out of voltage range and will require adjustment. For instructions, refer to *Checking Reel Height Sensor Voltages – John Deere S and T Series, page 303*.

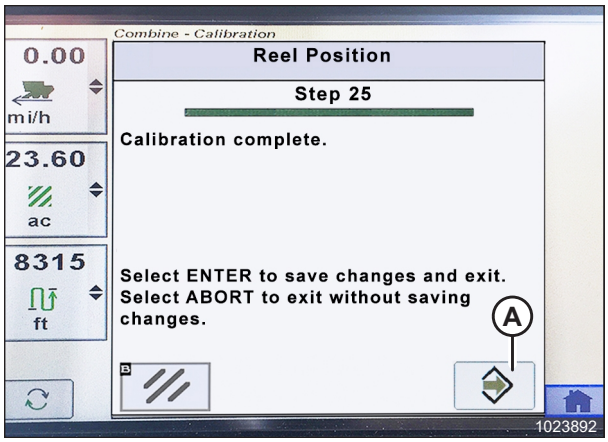

Figure 3.497: John Deere Combine Display

3.9.17 John Deere S7 Series Combines

Setting up Header – John Deere S7 Series

NOTE:

Changes may have been made to combine controls or display since this document was published. Refer to combine operator's manual for updates.

1. Press header button (A) on the panel below the display. The HEADER page opens.



Figure 3.498: John Deere S7 Display

2. Select HEADER TYPE field (A). The HEADER DETAILS window opens.

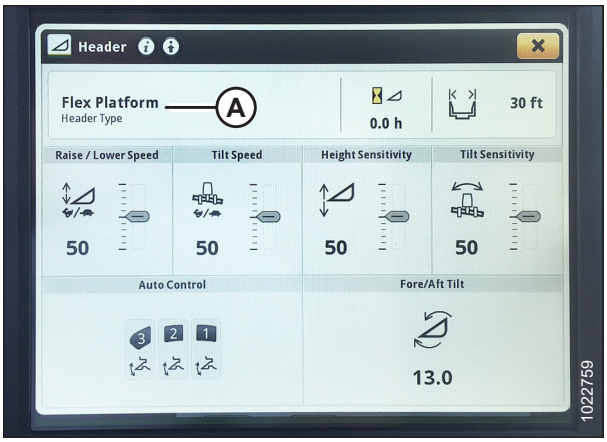

Figure 3.499: John Deere S7 Display – Header Page

3. Verify correct header width is displayed under WIDTH.
4. To change header width, select field (A). The WIDTH window opens.



Figure 3.500: John Deere S7 Display – Header Details Window

5. Use the on-screen keypad to enter the correct header width, and then press OK.



Figure 3.501: John Deere S7 Display – Setting Header Width

6. Press window close button (A) in top right corner of the window to return to the HEADER page.



Figure 3.502: John Deere S7 Display – Header Details Window

7. Raise/lower speed (A), tilt speed (B), height sensitivity (C), and tilt sensitivity (D) can all be adjusted from this page. Select the option you would like to adjust. The following example shows the raise/lower speed adjustment.

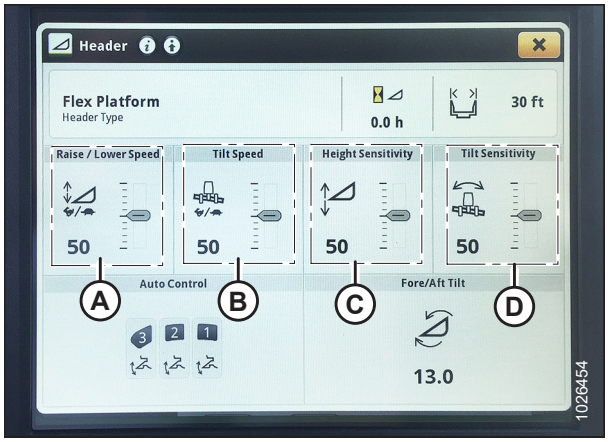

Figure 3.503: John Deere S7 Display – Header Page

8. Use **+** and **–** buttons (A) to adjust the setting.
9. Press window close button in top right corner of the window to return to the HEADER page.

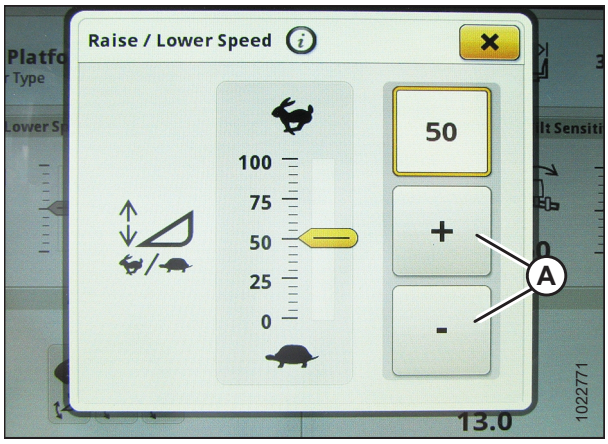

Figure 3.504: John Deere S7 Display – Raise/Lower Speed Adjustment

10. Select AUTO CONTROL icons (A). The AUTO HEADER CONTROLS page opens.

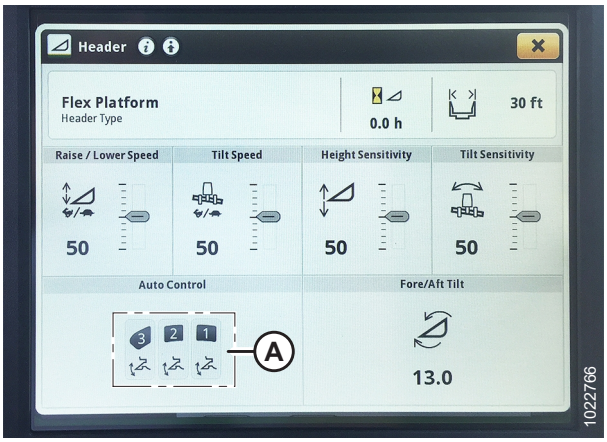

Figure 3.505: John Deere S7 Display – Header Page

11. If the header has not been calibrated yet, an error icon will appear on HEIGHT SENSING button (A). Select button (A) to view error message.

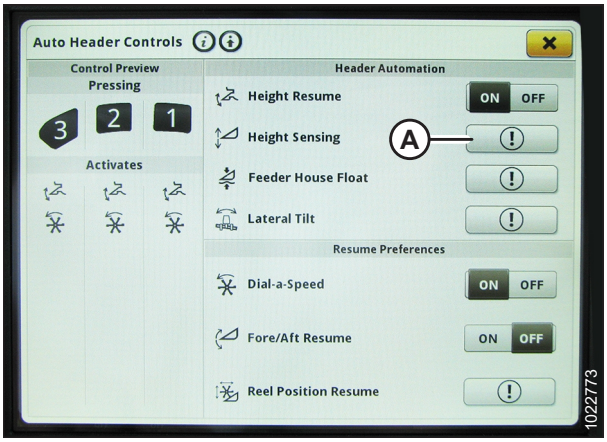

Figure 3.506: John Deere S7 Display – Auto Header Controls

12. Read error message and then press OK.
13. Proceed to *Checking Voltage Range from the Combine Cab – John Deere S7 Series, page 312*.

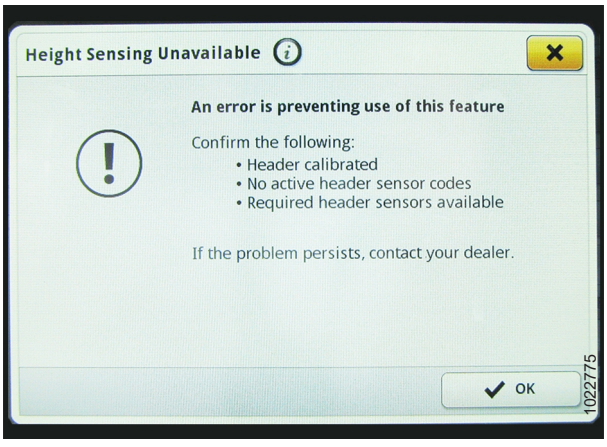

Figure 3.507: John Deere S7 Display – Height Sensing Error Message

Checking Voltage Range from the Combine Cab – John Deere S7 Series

The auto header height sensor output must be within a specific range, or the feature will not work properly.

Table 3.21 Voltage Range

Combine	Low Voltage Limit	High Voltage Limit	Minimum Range
John Deere S7 Series	0.5 V	4.5 V	3.0 V

NOTE:

Changes may have been made to the combine controls or display since this document was published. Refer to the combine operator's manual for updates.

WARNING

Check to be sure all bystanders have cleared the area.

1. Position header 150 mm (6 in.) above ground, and unlock float.
2. Check that float lock linkage is on down stops (washer [A] cannot be moved) at both locations.

   NOTE:

   If header is not on down stops during next two steps, voltage may go out of range during operation causing a malfunction of auto header height control (AHHC) system.

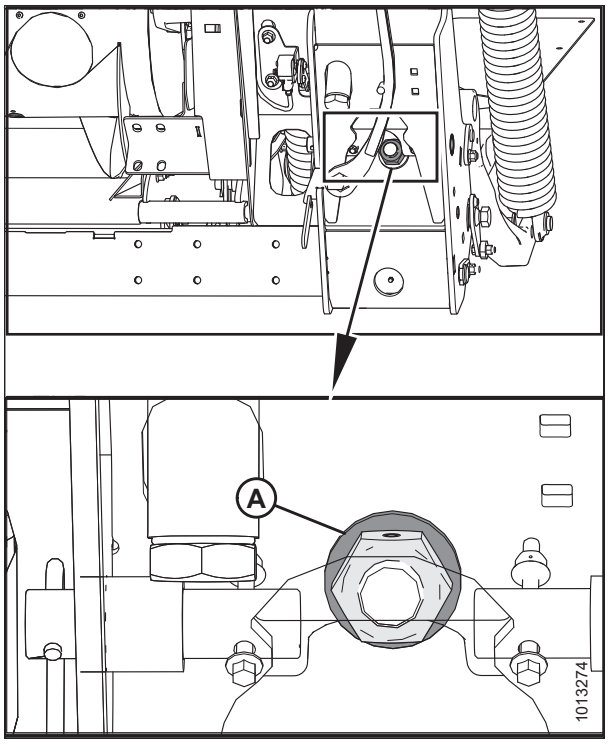

Figure 3.508: Float Lock

3. Adjust cable take-up bracket (B) (if necessary) until pointer (A) on float indicator is on **0**.

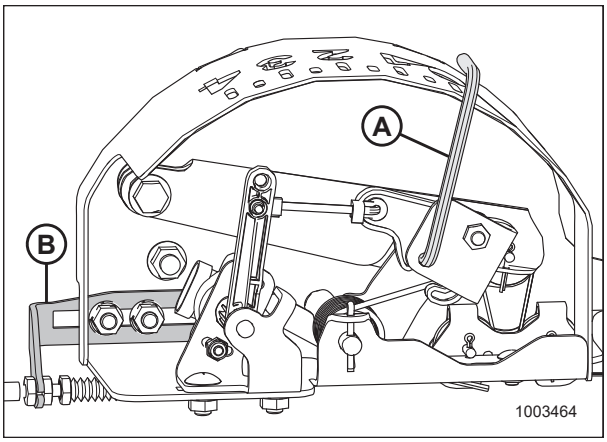

Figure 3.509: Float Indicator Box

4. On the HARVESTING page, select MENU icon (A) in the bottom right corner of the screen.

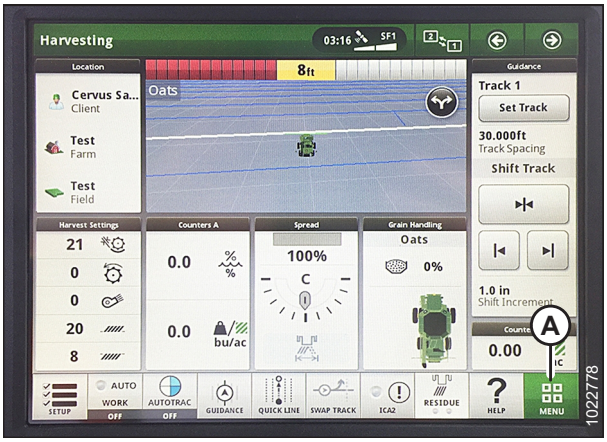

Figure 3.510: John Deere S7 Display – Harvesting Page

5. On the MENU page, select SYSTEM tab (A). The MENU opens.
6. Select DIAGNOSTICS CENTER icon (B). The DIAGNOSTICS CENTER page opens.

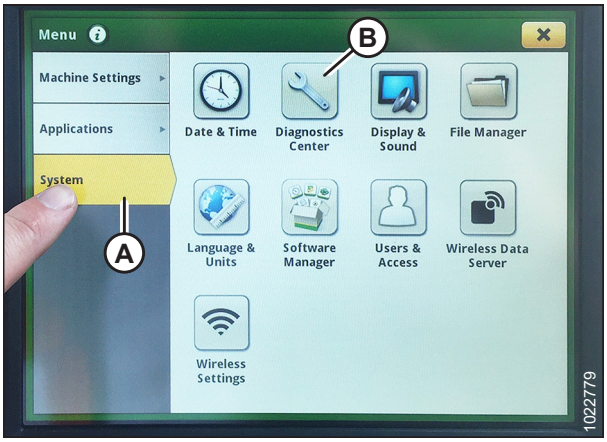

Figure 3.511: John Deere S7 Display – Menu

7. Select AHC - SENSING (A). The AHC - SENSING\ DIAGNOSTICS page displays.

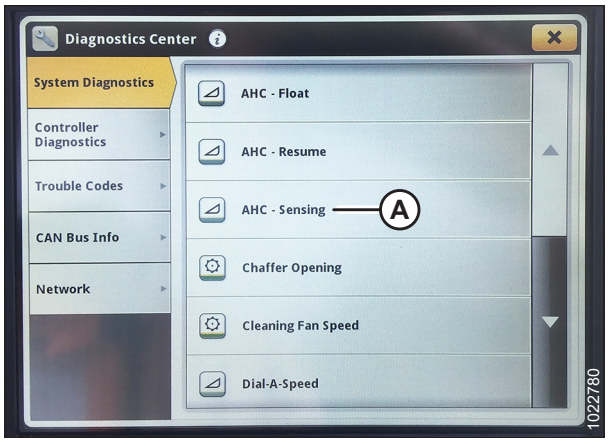

Figure 3.512: John Deere S7 Display – Diagnostics Center

8. Select SENSOR tab (A) to view sensor voltages. Center header height sensor voltage (B) must be between 0.5 and 4.5 V, with at least 3 V of variation between 0 and 4 on the float indicator box.

   NOTE:

   If the optional Auto Lateral Tilt AHHC kit is installed, the left and right header height sensors must also be in the same 0.5–4.5 V range.

9. If sensor voltage adjustment is required, refer to *Adjusting Voltage Limits – One-Sensor System, page 159*.

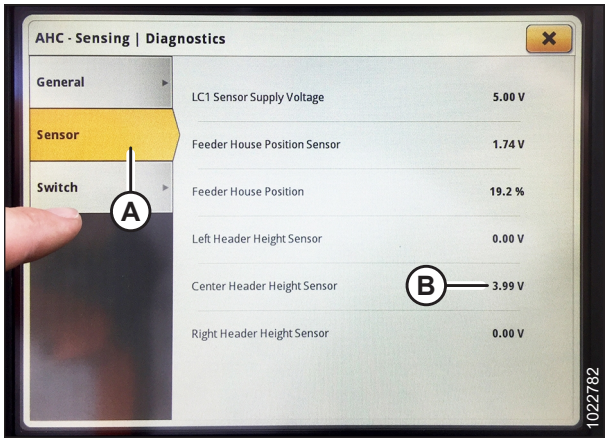

Figure 3.513: John Deere S7 Display – Checking Sensor Voltage

Calibrating Feeder House – John Deere S7 Series

Feeder house calibration must be done before header calibration.

For best performance of auto header height control (AHHC), perform these procedures with center-link set to **D**. When setup and calibration are complete, adjust center-link back to desired header angle. For instructions, refer to *Adjusting Header Angle from Combine, page 103*.

NOTE:

Changes may have been made to the combine controls or display since this document was published. Refer to the combine operator's manual for updates.

1. Ensure center-link is set to **D**.
2. Rest header on down stops and unlock float.
3. On the HARVESTING page, select MENU icon (A) in the bottom right corner of screen. The MENU opens.

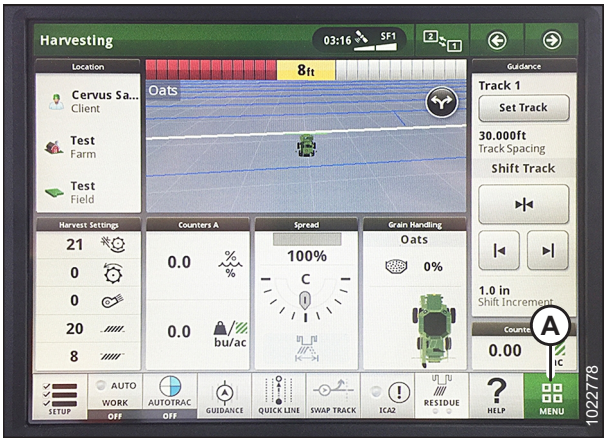

Figure 3.514: John Deere S7 Display – Harvesting Page

4. Select MACHINE SETTINGS tab (A).
5. Select CALIBRATIONS & PROCEDURES icon (B). The CALIBRATIONS & PROCEDURES page displays.

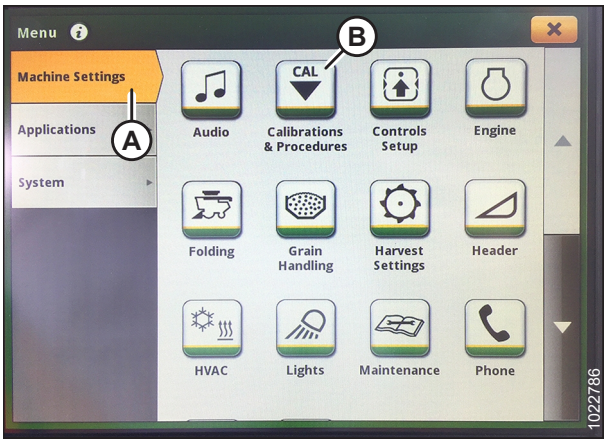

Figure 3.515: John Deere S7 Display – Machine Settings

6. Select HEADER tab (A).
7. Select FEEDER HOUSE RAISE SPEED CALIBRATION (B). The FH RAISE SPEED CALIBRATION page displays.

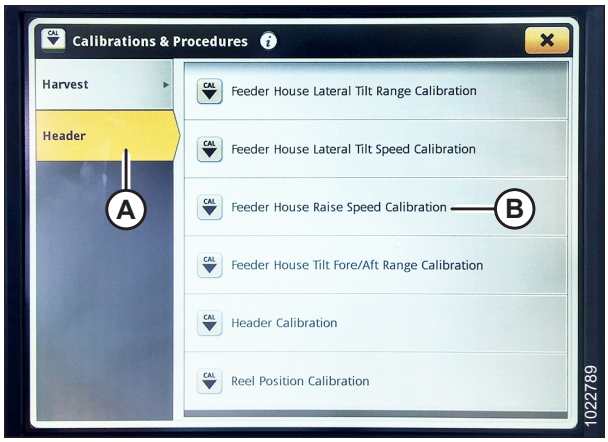

Figure 3.516: John Deere S7 Display – Calibrations and Procedures

8. Select CALIBRATE (A) at the bottom of the page. A calibration overview displays.

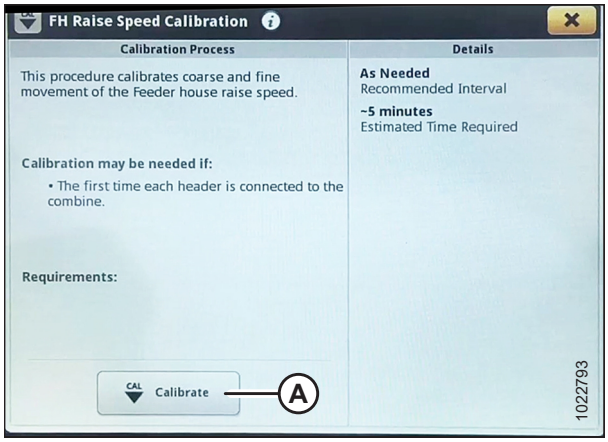

Figure 3.517: John Deere S7 Display – Feeder House Calibration

9. Read the calibration overview, and then press START.

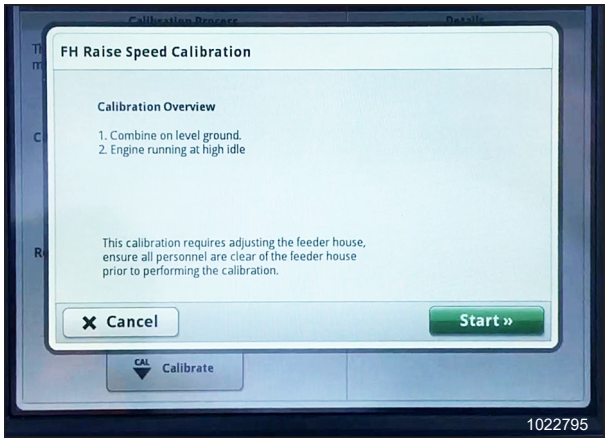

Figure 3.518: John Deere S7 Display – Feeder House Calibration

10. Follow the instructions on the screen. As you proceed through the calibration process, the display will automatically update to show next step.

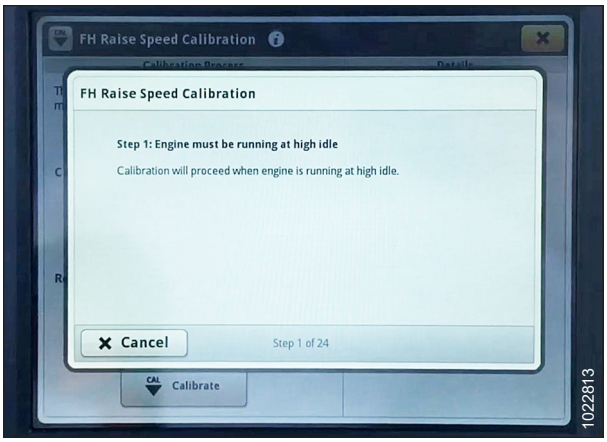

Figure 3.519: John Deere S7 Display – Feeder House Calibration

11. When calibration is complete, select SAVE to confirm calibration.

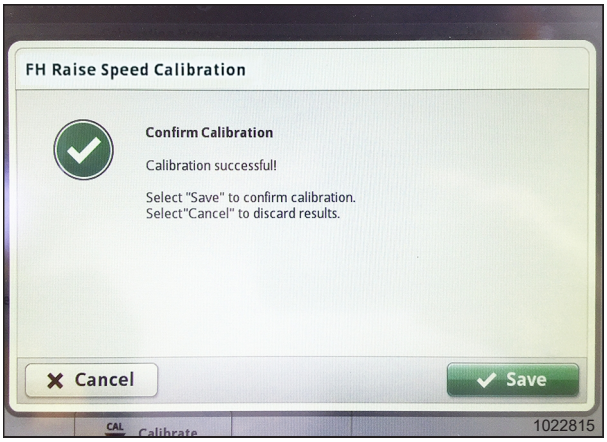

Figure 3.520: John Deere S7 Display – Feeder House Calibration

Calibrating Header – John Deere S7 Series

WARNING

Never start or move the machine until you are sure all bystanders have cleared the area.

Feeder house calibration must be done before header calibration. If feeder house has not yet been calibrated, refer to *Calibrating Feeder House – John Deere S7 Series, page 315*.

For best performance of auto header height control (AHHC), perform these procedures with the center-link set to **D**. When setup and calibration are complete, adjust center-link back to desired header angle.

NOTE:

Changes may have been made to combine controls or display since this document was published. Refer to the combine operator's manual for updates.

1. Ensure center-link is set to **D**.
2. Rest header on down stops and unlock float.

3. On the HARVESTING page, select MENU icon (A) in the bottom right corner of screen. The MENU opens.

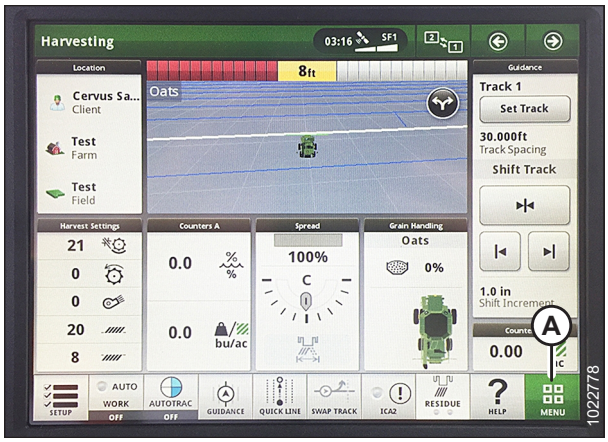

Figure 3.521: John Deere S7 Display – Harvesting Page

4. Select MACHINE SETTINGS tab (A).
5. Select CALIBRATIONS & PROCEDURES icon (B). The CALIBRATIONS & PROCEDURES page displays.

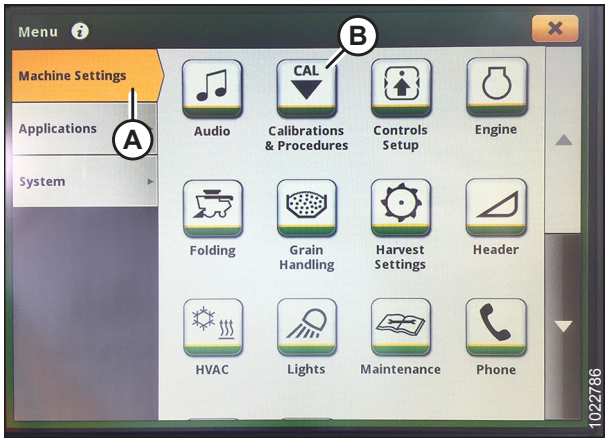

Figure 3.522: John Deere S7 Display – Machine Settings

6. Select HEADER tab (A).
7. Select HEADER CALIBRATION (B). The HEADER CALIBRATION page displays.

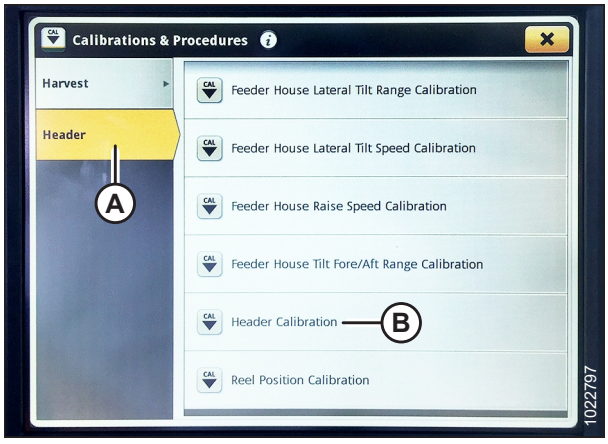

Figure 3.523: John Deere S7 Display – Calibrations and Procedures

8. Select CALIBRATE (A) at bottom of page. The calibration overview window opens.

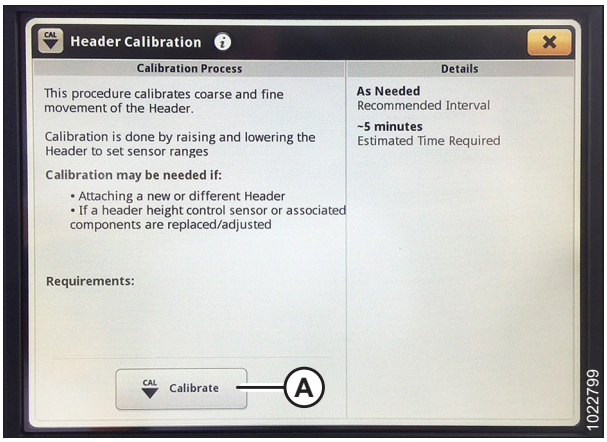

Figure 3.524: John Deere S7 Display – Header Calibration

9. Press button (A) on console to set engine to high idle.



Figure 3.525: John Deere S7 Console

10. Select START on calibration overview page.
11. Follow instructions that appear on combine display. As you proceed through calibration process, display will automatically update to show next step.

    NOTE:

    If an error code appears during calibration, sensor is out of voltage range and will require adjustment. For instructions, refer to *Adjusting Voltage Limits – One-Sensor System, page 159*.

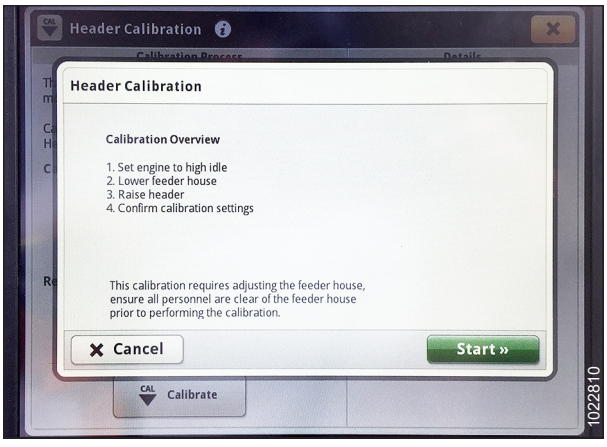

Figure 3.526: John Deere S7 Display – Header Calibration

12. When calibration is complete, select SAVE to confirm calibration.

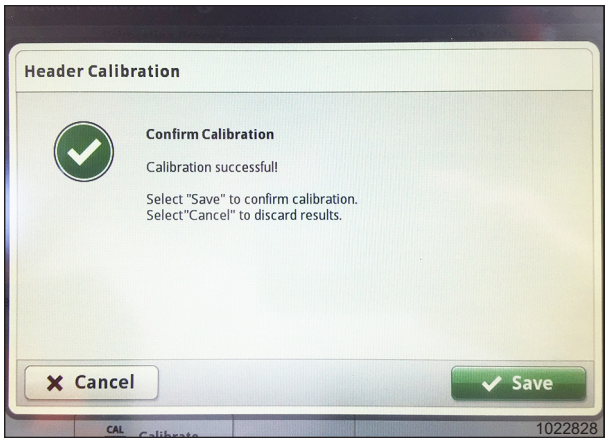

Figure 3.527: John Deere S7 Display – Header Calibration

3.9.18 New Holland Combines – CR/CX Series – 2014 and Prior

This section applies only to pre-2015 CR/CX models. For New Holland CR models 6.80, 6.90, 7.90, 8.90, 9.90, and 10.90, refer to *3.9.19 New Holland Combines – CR Series – 2015 and Later, page 332*.

Checking Voltage Range from the Combine Cab – New Holland CR/CX Series

NOTE:

Changes may have been made to the combine controls or display since this document was published. Refer to the combine operator's manual for updates.

NOTE:

For New Holland CR models 6.80, 6.90, 7.90, 8.90, 9.90, and 10.90, refer to *3.9.19 New Holland Combines – CR Series – 2015 and Later, page 332*.

WARNING

Check to be sure all bystanders have cleared the area.

1. Position the header 150 mm (6 in.) above the ground, and unlock the float.

2. Check that float lock linkage is on down stops (washer [A] cannot be moved) at both locations.

   NOTE:

   If the header is not on down stops during the next two steps, the voltage may go out of range during operation causing a malfunction of the AHHC system. If the header is not on down stops, refer to *3.10 Leveling the Header, page 348* for instructions.

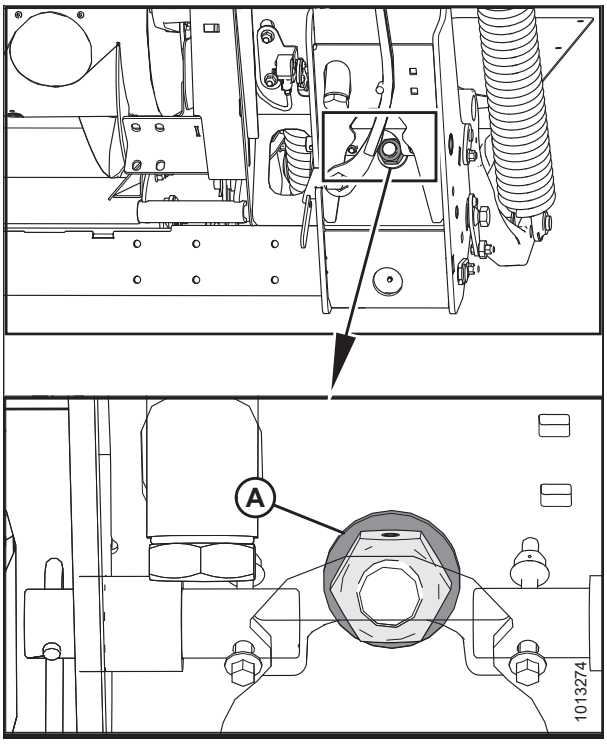

Figure 3.528: Float Lock

3. Adjust cable take-up bracket (B) (if necessary) until float indicator pointer (A) is on **0**.

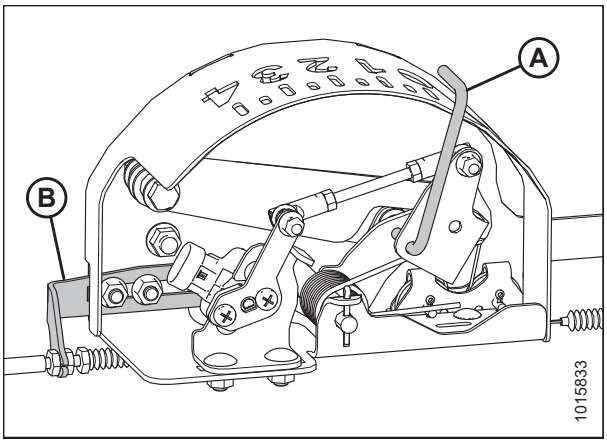

Figure 3.529: Float Indicator Box

4. Ensure header float is unlocked.
5. Select DIAGNOSTICS (A) on the main screen. The DIAGNOSTICS screen displays.
6. Select SETTINGS. The SETTINGS screen displays.

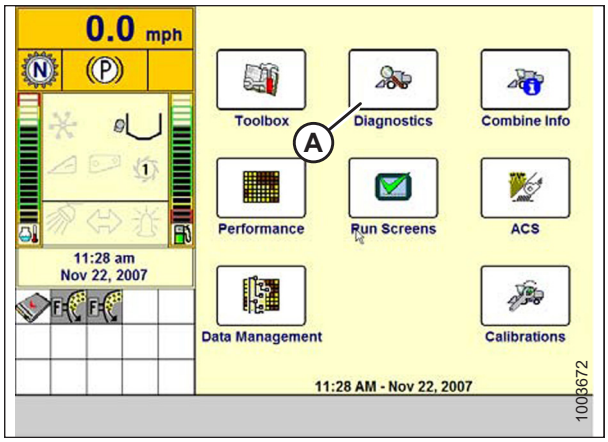

Figure 3.530: New Holland Combine Display

7. Select GROUP drop-down arrow (A). The GROUP dialog box displays.

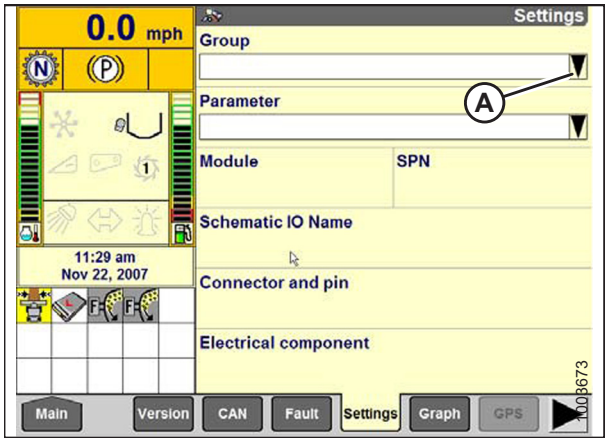

Figure 3.531: New Holland Combine Display

8. Select HEADER HEIGHT/TILT (A). The PARAMETER screen displays.

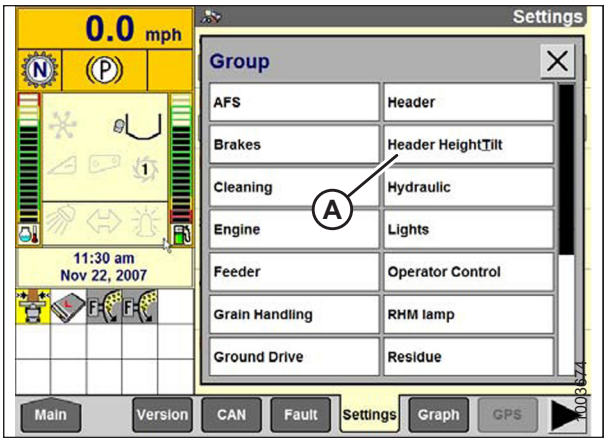

Figure 3.532: New Holland Combine Display

9. Select LEFT HEADER HEIGHT SEN (A), and then select GRAPH button (B). The exact voltage is displayed at the top of the screen.
10. Raise and lower the header to see the full range of voltage readings.
11. If the sensor voltage is not within the low and high limits, or if the range between the low and high limits is insufficient, adjust the voltage limits. For instructions, refer to *Adjusting Voltage Limits – One-Sensor System, page 159*.

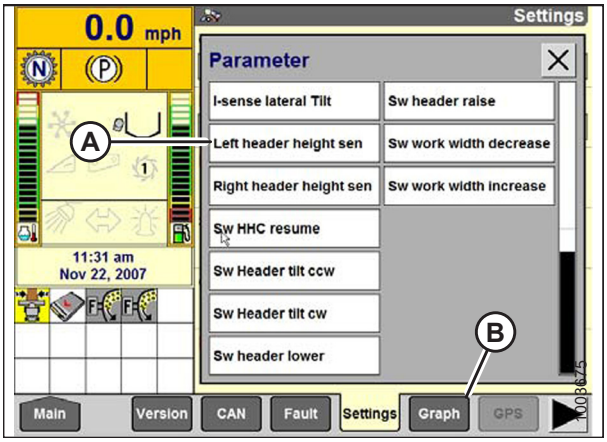

Figure 3.533: New Holland Combine Display

Setting up Auto Header Height Control – New Holland CR/CX Series

NOTE:

Changes may have been made to the combine controls or display since this document was published. Refer to the combine operator's manual for updates.

NOTE:

For New Holland CR models 6.80, 6.90, 7.90, 8.90, 9.90, and 10.90, refer to *3.9.19 New Holland Combines – CR Series – 2015 and Later, page 332*.

1. Select HEADER LATERAL FLOAT on the combine display, and press ENTER.
2. Use the up and down navigation keys to move between options, and select INSTALLED.

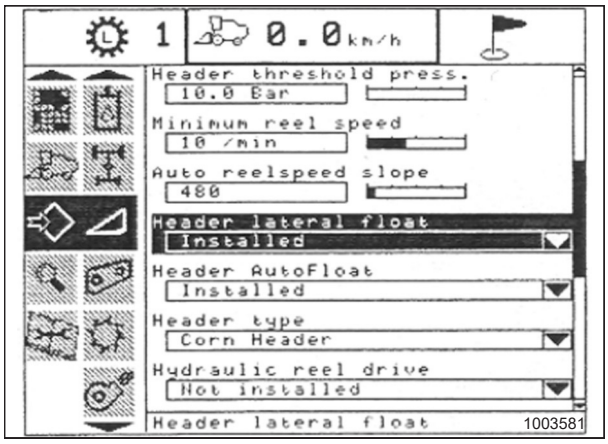

Figure 3.534: New Holland Combine Display

3. Select HEADER AUTOFLOAT, and press ENTER.
4. Use the up and down navigation keys to move between options, and select INSTALLED.

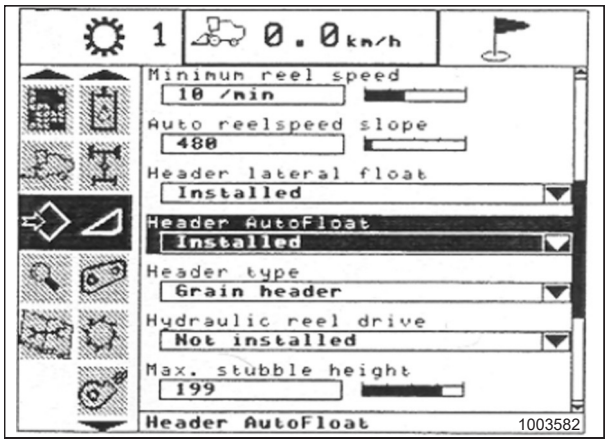

Figure 3.535: New Holland Combine Display

Calibrating the Auto Header Height Control – New Holland CR/CX Series

For best performance of the auto header height control (AHHC), perform these procedures with the center-link set to **D**. When setup and calibration are complete, adjust the center-link back to desired header angle. For instructions, refer to *3.8.4 Header Angle, page 101*.

NOTE:

Changes may have been made to the combine controls or display since this document was published. Refer to the combine operator's manual for updates.

NOTE:

For New Holland CR models 6.80, 6.90, 7.90, 8.90, 9.90, and 10.90, refer to *3.9.19 New Holland Combines – CR Series – 2015 and Later, page 332*.

WARNING

Check to be sure all bystanders have cleared the area.

NOTE:

If header float is set too light, it can prevent calibration of AHHC. You may need to set the float heavier for calibration procedure so header doesn't separate from the float module.

Check the following conditions before starting the header calibration procedure:

- The header is attached to the combine.
- The combine is on level ground, with the header level to the ground.
- The header is on down stops, and the center-link is set to **D**.
- The engine is running.
- The combine is not moving.
- No faults have been received from the Header Height Controller (HHC) module.
- Header/feeder is disengaged.
- Lateral float buttons are **NOT** pressed.
- ESC key is **NOT** pressed.

To calibrate the AHHC, follow these steps:

1. Select CALIBRATION on the combine display, and press the RIGHT ARROW navigation key to enter the information box.
2. Select HEADER (A), and press ENTER. The CALIBRATION dialog box opens.

   NOTE:

   You can use the up and down navigation keys to move between options.

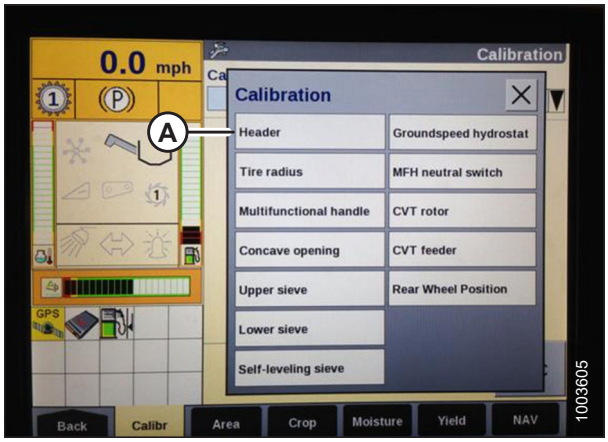

Figure 3.536: New Holland Combine Display

3. Follow the calibration steps in the order in which they appear in the dialog box. As you proceed through the calibration process, the display will automatically update to show the next step.

   NOTE:

   Pressing the ESC key during any of the steps or letting the system sit idle for more than 3 minutes will cause the calibration procedure to stop.

   NOTE:

   Refer to your combine operator's manual for an explanation of any error codes.

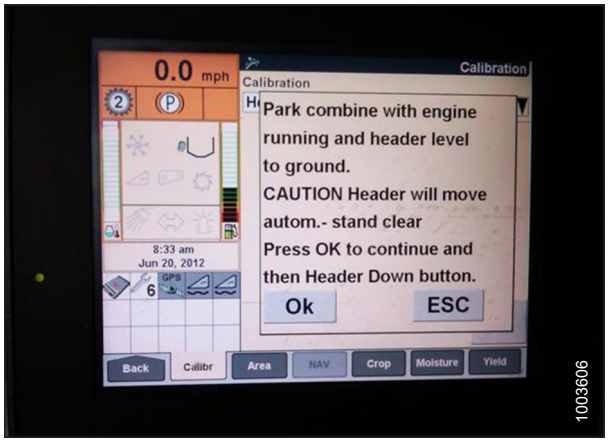

Figure 3.537: New Holland Combine Display

4. When all steps have been completed, CALIBRATION SUCCESSFUL message is displayed on the screen. Exit the CALIBRATION menu by pressing the ENTER or ESC key.

   NOTE:

   If float was set heavier to complete AHHC calibration procedure, adjust to recommended operating float after the calibration is complete.

5. If the unit does not function properly, conduct the maximum stubble height calibration.

Calibrating Maximum Stubble Height – New Holland CR/CX Series

This procedure describes how to calibrate the area counter to stop or start counting at the correct height. Program the header to a height that will never be reached while cutting. The area counter will stop counting when the header is above the programmed height, and will begin counting when the header is below the programmed height.

Select the height of the header that corresponds to the description above.

IMPORTANT:

- If the value is set too low, area may **NOT** be counted since the header is sometimes raised above this threshold although the combine is still cutting.
- If the value is set too high, the area counter will keep counting even when the header is raised (but below this threshold) and the combine is no longer cutting crop.

WARNING

Check to be sure all bystanders have cleared the area.

1. Select the MAXIMUM STUBBLE HEIGHT calibration dialog box. As you proceed through the calibration process, the display will automatically update to show the next step.

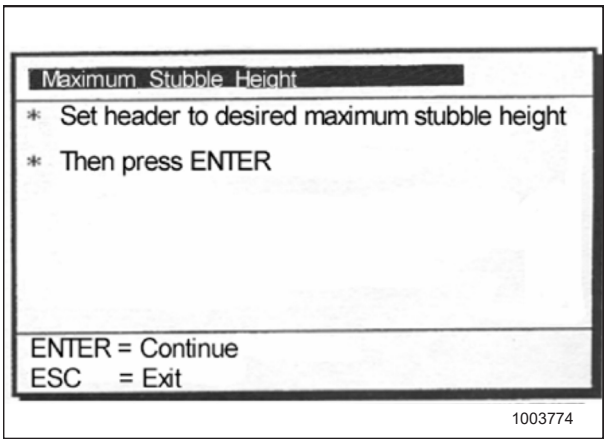

Figure 3.538: New Holland Calibration Dialog Box

2. Move header to the correct position using the header up or down control switch on the multifunction handle.
3. Press ENTER to continue. As you proceed through the calibration process, the display will automatically update to show the next step.
4. Press ENTER or ESC to close the calibration screen. The calibration is now complete.

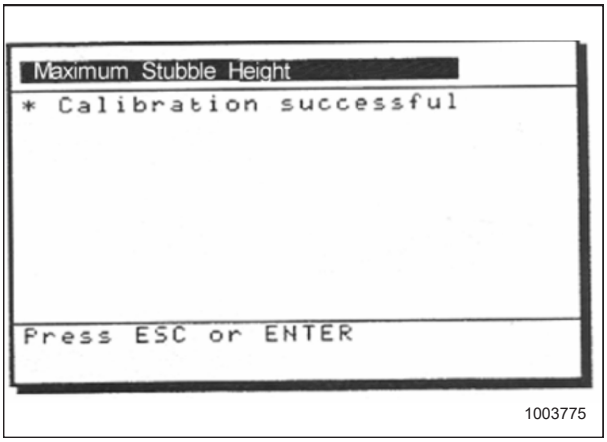

Figure 3.539: New Holland Calibration Dialog Box

Adjusting Header Raise Rate – New Holland CR/CX Series

If necessary, the header raise rate (the first speed on the HEADER HEIGHT rocker switch of the multifunctional handle) can be adjusted.

NOTE:

Changes may have been made to the combine controls or display since this document was published. Refer to the combine operator's manual for updates.

NOTE:

For New Holland CR models 6.80, 6.90, 7.90, 8.90, 9.90, and 10.90, refer to *3.9.19 New Holland Combines – CR Series – 2015 and Later, page 332*.

1. Select HEADER RAISE RATE on the combine display.
2. Use the + or – buttons to change the setting.
3. Press ENTER to save the new setting.

   NOTE:

   The raise rate can be changed from 32–236 in steps of 34. The factory setting is 100.

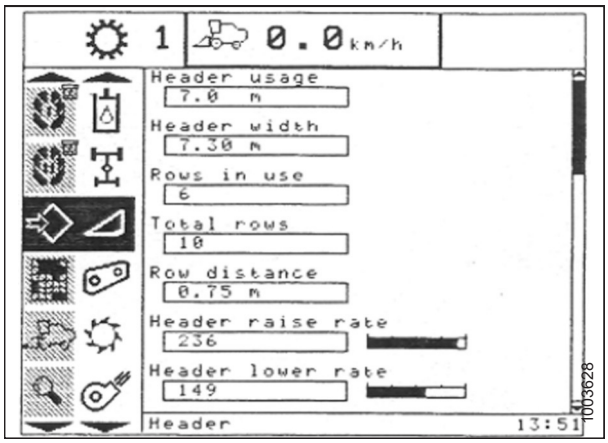

Figure 3.540: New Holland Combine Display

Setting the Header Lower Rate – New Holland CR/CX Series

If necessary, the header lower rate (the automatic header height control button or second speed on the header height rocker switch of the multifunction handle) can be adjusted.

NOTE:

Changes may have been made to the combine controls or display since this document was published. Refer to the combine operator's manual for updates.

NOTE:

For New Holland CR models 6.80, 6.90, 7.90, 8.90, 9.90, and 10.90, refer to *3.9.19 New Holland Combines – CR Series – 2015 and Later, page 332*.

1. Select HEADER LOWER RATE on the combine display.
2. Use the + or – buttons to change the setting to 50.
3. Press ENTER to save the new setting.

   NOTE:

   The header lower rate can be changed from 2–247 in increments of 7. It is factory-set to 100.

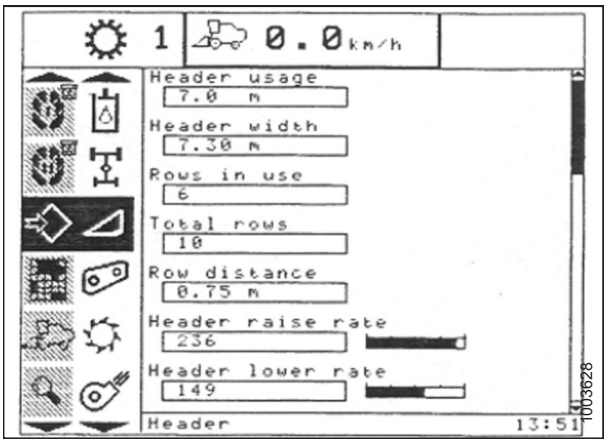

Figure 3.541: New Holland Combine Display

Setting the Sensitivity of the Auto Header Height Control – New Holland CR/CX Series

The sensitivity adjustment controls the distance the cutterbar must travel up or down before the auto header height control (AHHC) reacts and raises or lowers the feeder house. When the sensitivity is set to maximum, only small changes in ground height are needed to cause the feeder house to raise or lower. When the sensitivity is set to minimum, large changes in the ground height are needed to cause the feeder house to raise or lower.

NOTE:

Changes may have been made to the combine controls or display since this document was published. Refer to the combine operator's manual for updates.

NOTE:

For New Holland CR models 6.80, 6.90, 7.90, 8.90, 9.90, and 10.90, refer to *3.9.19 New Holland Combines – CR Series – 2015 and Later, page 332*.

WARNING

Check to be sure all bystanders have cleared the area.

1. Engage threshing and feeder house.
2. Select HEIGHT SENSITIVITY on the combine display screen.
3. Use the + or – buttons to change the setting to 200.
4. Press ENTER to save the new setting.

   NOTE:

   The sensitivity can be changed from 10–250 in increments of 10. It is factory-set to 100.

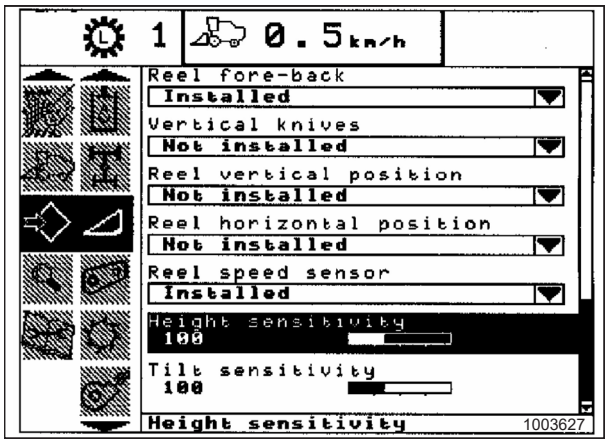

Figure 3.542: New Holland Combine Display

Setting Preset Cutting Height – New Holland CR/CX Series

To set the preset cutting height, follow these steps:

NOTE:

Changes may have been made to the combine controls or display since this document was published. Refer to the combine operator's manual for updates.

NOTE:

For New Holland CR models 6.80, 6.90, 7.90, 8.90, 9.90, and 10.90, refer to *3.9.19 New Holland Combines – CR Series – 2015 and Later, page 332*.

NOTE:

Indicator (A) should be at position 0 (B) with the header (152 mm [6 in.]) off the ground. If not, the float sensor output voltage should be checked. Refer to Step *5, page 154*. When the header is on the ground, the indicator should be at position 1 (C) for low ground pressure, and at position 4 (D) for high ground pressure. Crop and soil conditions determine the amount of float to use. The ideal setting is as light as possible without header bouncing or missing crop. Operating with heavy settings prematurely wears the cutterbar wearplates.

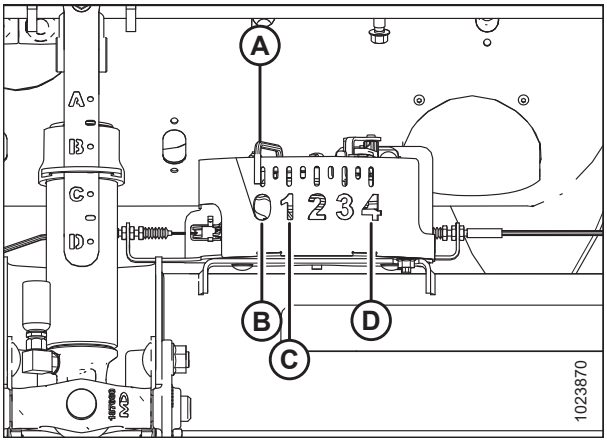

Figure 3.543: Float Indicator Box

1. Engage the threshing mechanism and the feeder with switches (A) and (B).
2. Set HEADER MEMORY rocker switch (D) in STUBBLE HEIGHT/AUTOFLOAT mode position (A) or (B).
3. Raise or lower the header to the desired cutting height using HEADER HEIGHT and HEADER LATERAL FLOAT momentary switch (C).
4. Lightly press AUTOMATIC HEADER HEIGHT CONTROL button (E) for a minimum of 2 seconds to store the height position. A beep will confirm the setting.

   NOTE:

   It is possible to store two different header height values by using HEADER MEMORY rocker switch (D) in STUBBLE HEIGHT/AUTOFLOAT mode position (A) or (B).
5. Raise or lower the reel to the desired working height using REEL HEIGHT momentary switch (E).
6. Lightly press AUTOMATIC HEADER HEIGHT CONTROL button (E) for a minimum of 2 seconds to store the height position. A beep will confirm the setting.

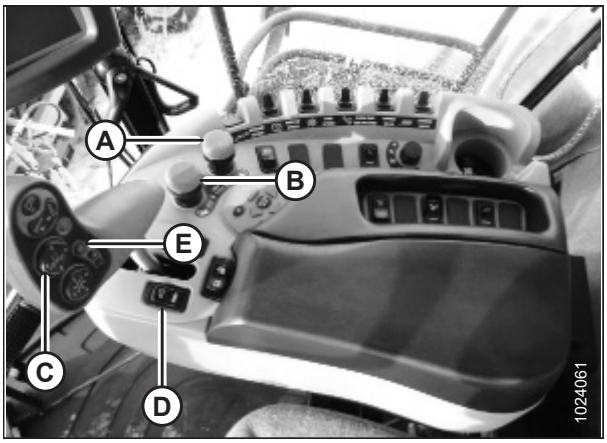

Figure 3.544: New Holland Combine Controls

7. To change one of the memorized header height set points while the combine is in use, use HEADER HEIGHT AND HEADER LATERAL FLOAT rocker switch (A) (slow up/down) to raise or lower header to the desired value. Lightly press AUTOMATIC HEADER HEIGHT CONTROL button (B) for a minimum of 2 seconds to store the new height position. A beep will confirm setting.

   NOTE:

   Fully pressing AUTOMATIC HEADER HEIGHT CONTROL button (B) will disengage float mode.

   NOTE:

   It is not necessary to press rocker switch (C) again after changing header height set point.

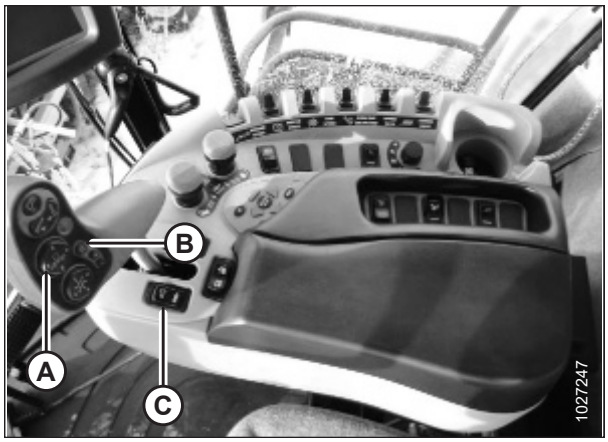

Figure 3.545: New Holland Combine Controls

3.9.19 New Holland Combines – CR Series – 2015 and Later

This section applies only to 2015 and later CR models (6.80, 6.90, 7.90, 8.90, 9.90, and 10.90). For other pre-2015 New Holland combine models, refer to *3.9.18 New Holland Combines – CR/CX Series – 2014 and Prior, page 320*.

Checking Voltage Range from the Combine Cab – New Holland CR Series

NOTE:

Changes may have been made to the combine controls or display since this document was published. Refer to the combine operator's manual for updates.

NOTE:

This section applies only to 2015 and later CR models (6.80, 6.90, 7.90, 8.90, 9.90, and 10.90). For other pre-2015 New Holland combine models, refer to *3.9.18 New Holland Combines – CR/CX Series – 2014 and Prior, page 320*.

WARNING

Check to be sure all bystanders have cleared the area.

1. Position the header 150 mm (6 in.) above the ground, and unlock the float.

2. Check that float lock linkage is on down stops (washer [A] cannot be moved) at both locations.

   NOTE:

   If the header is not on down stops during the next two steps, the voltage may go out of range during operation causing a malfunction of the auto header height control (AHHC) system. If the header is not on down stops, refer to *3.10 Leveling the Header, page 348* for instructions.

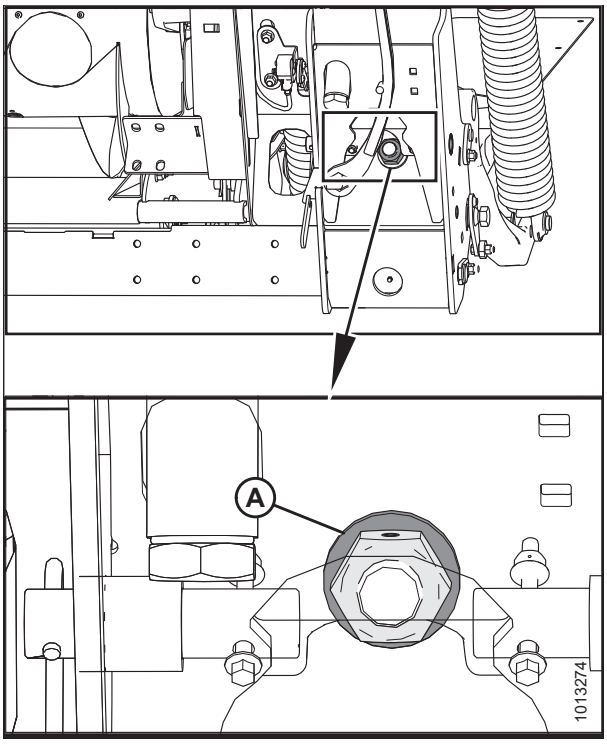

Figure 3.546: Float Lock

3. Adjust cable take-up bracket (B) (if necessary) until float indicator pointer (A) is on **0**.
4. Ensure header float is unlocked.

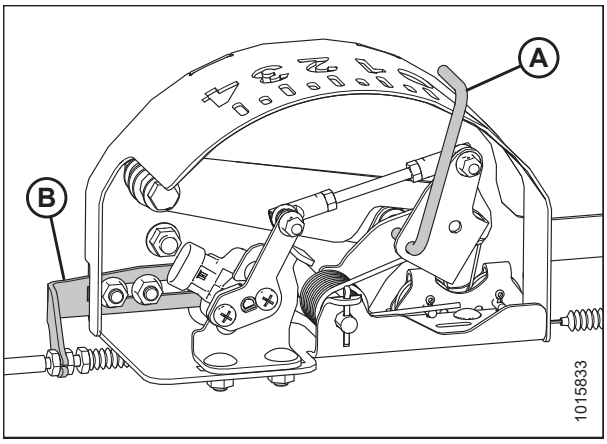

Figure 3.547: Float Indicator Box

5. Select DIAGNOSTICS (A) on the main screen. The DIAGNOSTICS screen displays.

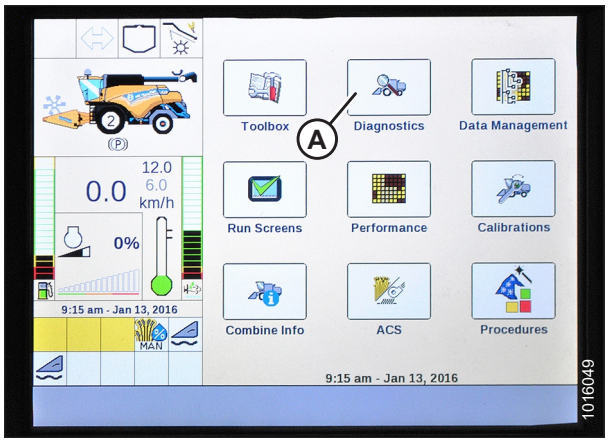

Figure 3.548: New Holland Combine Display

6. Select SETTINGS (A). The SETTINGS screen displays.

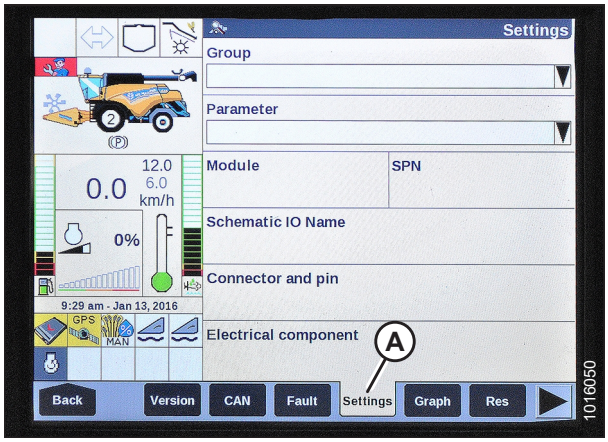

Figure 3.549: New Holland Combine Display

7. Select HEADER HEIGHT/TILT (A) from the GROUP drop-down menu.
8. Select HEADER HEIGHT SENS. L (B) from the PARAMETER drop-down menu.

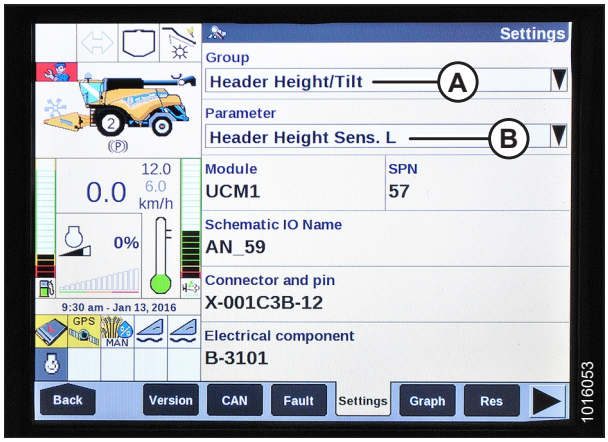

Figure 3.550: New Holland Combine Display

9. Select GRAPH (A). The exact voltage (B) is displayed at the top of the screen.
10. Raise and lower the header to see the full range of voltage readings.
11. If the sensor voltage is not within the low and high limits, or if the range between the low and high limits is insufficient, adjust the voltage limits. For instructions, refer to *Adjusting Voltage Limits – One-Sensor System, page 159*.

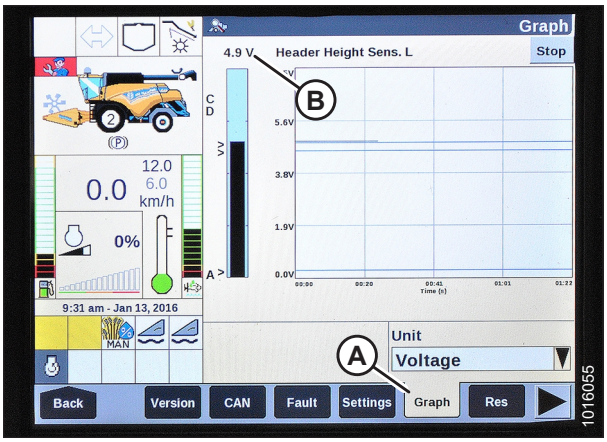

Figure 3.551: New Holland Combine Display

Setting up Auto Header Height Control – New Holland CR Series

For best performance of the auto header height control (AHHC), perform these procedures with the center-link set to **D**. When setup and calibration are complete, adjust the center-link back to desired header angle.

NOTE:

Changes may have been made to the combine controls or display since this document was published. Refer to the combine operator's manual for updates.

NOTE:

This section applies only to 2015 and later CR models (6.80, 6.90, 7.90, 8.90, 9.90, and 10.90). For other pre-2015 New Holland combine models, refer to *3.9.18 New Holland Combines – CR/CX Series – 2014 and Prior, page 320*.

1. Ensure center-link is set to **D**.
2. Select TOOLBOX (A) on the main screen. The TOOLBOX screen displays.

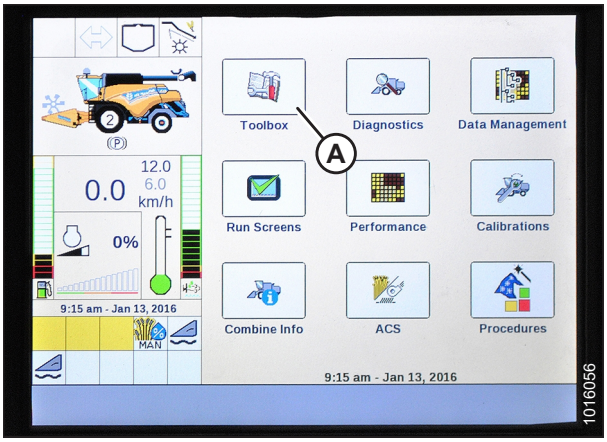

Figure 3.552: New Holland Combine Display

3. Simultaneously press UNLOAD (A) and RESUME (B) buttons on the control handle.

   NOTE:

   Software in some New Holland combines may not allow you to change the header from FLEX to PLATFORM or the header type from DEFAULT to 80/90 at the main menu. This is now a dealer setting, and requires you to access the DEALER SETTING screen by pressing and holding both the UNLOAD and RESUME buttons on the control handle for approximately 10 seconds. The DEALER SETTING screen should appear and will allow you to change the header and header type settings.



Figure 3.553: New Holland Combine Controls

4. Select HEAD 1 (A). The HEADER SETUP 1 screen displays.
5. Select CUTTING TYPE drop-down arrow (B) and change the CUTTING TYPE to PLATFORM (C).

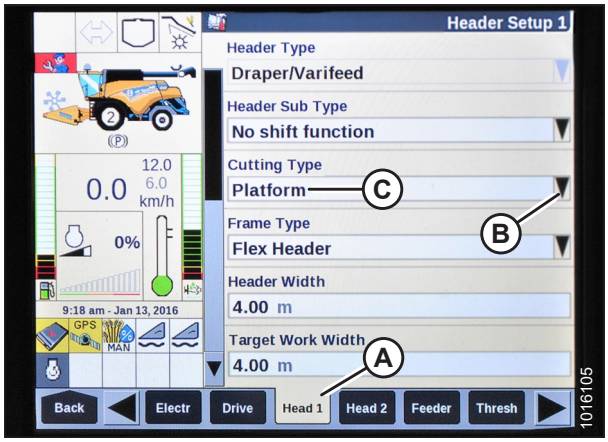

Figure 3.554: New Holland Combine Display

6. Select HEADER SUB TYPE drop-down arrow (A). The HEADER SUB TYPE dialog box displays.

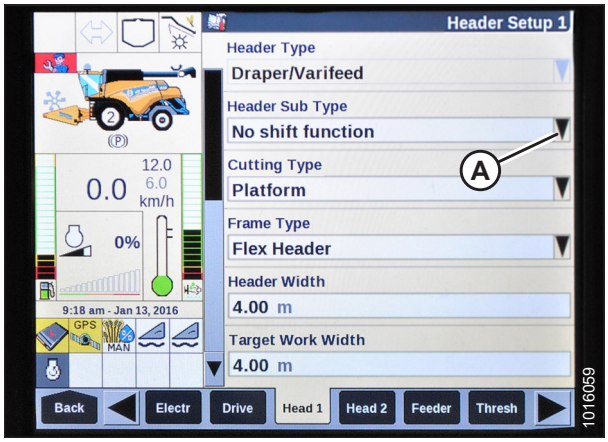

Figure 3.555: New Holland Combine Display

7. Set HEADER SUB TYPE to 80/90 (A) for a New Holland combine.

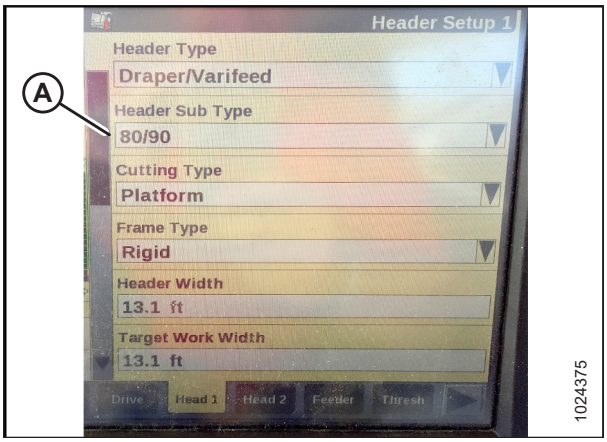

Figure 3.556: New Holland Combine Display

8. Select HEAD 2 (A). The HEADER SETUP 2 screen displays.

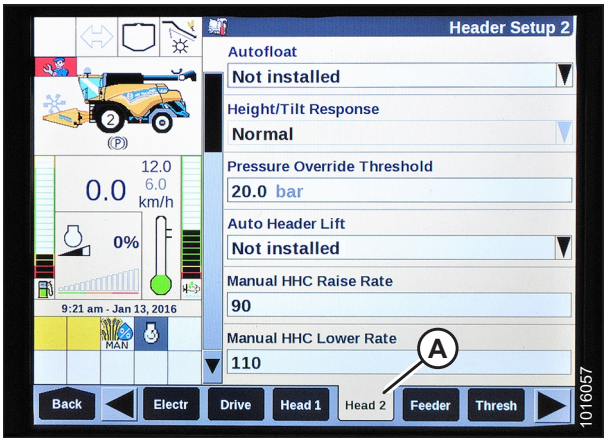

Figure 3.557: New Holland Combine Display

9. Select the AUTOFLOAT drop-down arrow and set AUTOFLOAT to INSTALLED (A).
10. Select the AUTO HEADER LIFT drop-down arrow and set AUTO HEADER LIFT to INSTALLED (B).

    NOTE:

    With AUTO HEADER LIFT installed and AHHC engaged, the header will lift up automatically when you pull back on the control handle.

11. Set the values for MANUAL HHC RAISE RATE (C) and MANUAL HHC LOWER RATE (D) for best performance according to ground conditions.

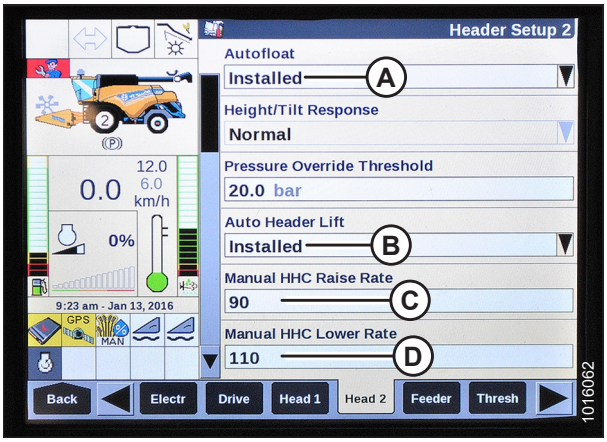

Figure 3.558: New Holland Combine Display

12. Set the values for HHC HEIGHT SENSITIVITY (A) and HHC TILT SENSITIVITY (B) for best performance according to ground conditions.

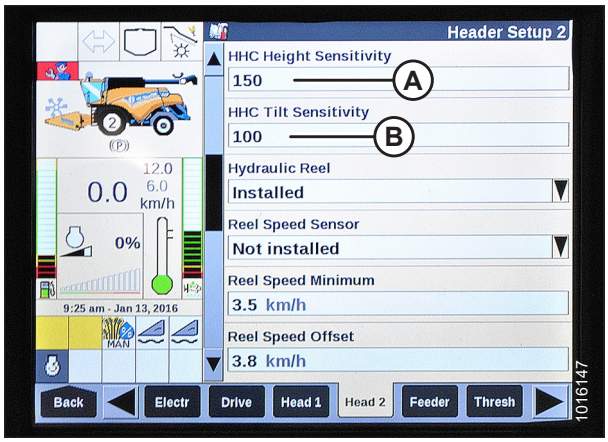

Figure 3.559: New Holland Combine Display

13. From REEL HEIGHT SENSOR menu (A), select YES.

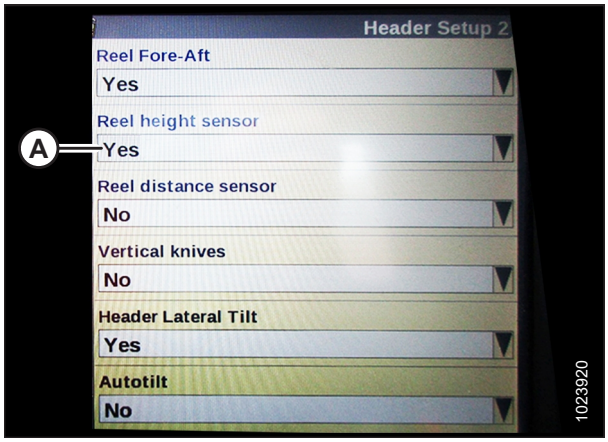

Figure 3.560: New Holland Combine Display

Calibrating the Auto Header Height Control – New Holland CR Series

For best performance of the auto header height control (AHHC), perform these procedures with the center-link set to **D**. When setup and calibration are complete, adjust the center-link back to desired header angle. For instructions, refer to *3.8.4 Header Angle, page 101*.

NOTE:

Changes may have been made to the combine controls or display since this document was published. Refer to the combine operator's manual for updates.

NOTE:

This section applies only to 2015 and later CR models (6.80, 6.90, 7.90, 8.90, 9.90, and 10.90). For other pre-2015 New Holland combine models, refer to *3.9.18 New Holland Combines – CR/CX Series – 2014 and Prior, page 320*.

WARNING

Check to be sure all bystanders have cleared the area.

NOTE:

If header float is set too light, it can prevent calibration of AHHC. You may need to set the float heavier for calibration procedure so header doesn't separate from the float module.

Check the following conditions before starting the header calibration procedure:

- The header is attached to the combine.
- The combine is on level ground, with the header level to the ground.
- The header is on down stops, and the center-link is set to **D**.
- The engine is running.
- The combine is not moving.
- No faults have been received from the header height controller (HHC) module.
- Header/feeder is disengaged.
- Lateral float buttons are **NOT** pressed.
- ESC key is **NOT** pressed.

To calibrate the AHHC, follow these steps:

1. Select CALIBRATIONS (A) on the main screen. The CALIBRATION screen displays.

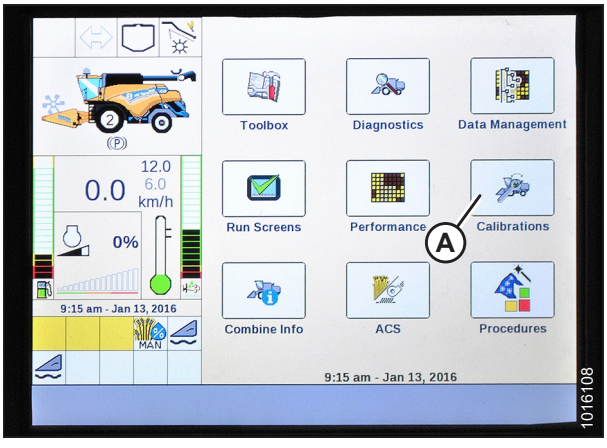

Figure 3.561: New Holland Combine Display

2. Select CALIBRATION drop-down arrow (A).



Figure 3.562: New Holland Combine Display

3. Select HEADER (A) from the list of calibration options.

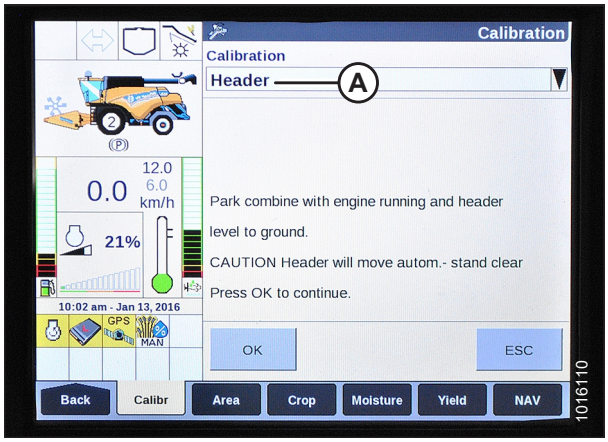

Figure 3.563: New Holland Combine Display

4. Follow the calibration steps in the order in which they appear on the screen. As you proceed through the calibration process, the display will automatically update to show the next step.

   NOTE:

   Pressing the ESC key during any of the steps or letting the system sit idle for more than 3 minutes will cause the calibration procedure to stop.

   NOTE:

   Refer to your combine operator's manual for an explanation of any error codes.

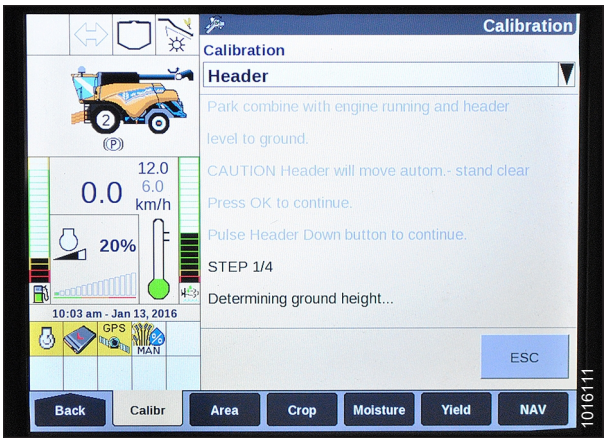

Figure 3.564: New Holland Combine Display

5. When all steps have been completed, CALIBRATION COMPLETED message is displayed on the screen.

   NOTE:

   If float was set heavier to complete AHHC calibration procedure, adjust to recommended operating float after the calibration is complete.

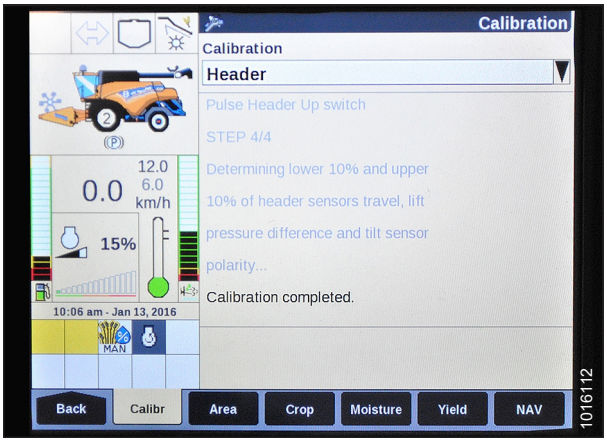

Figure 3.565: New Holland Combine Display

Checking Reel Height Sensor Voltages – New Holland CR Series

NOTE:

Changes may have been made to the combine controls or display since this document was published. Refer to the combine operator's manual for updates.

1. On the main page of the combine display, select DIAGNOSTICS (A). The DIAGNOSTICS page opens.



Figure 3.566: New Holland Combine Display

2. Select SETTINGS tab (A). The SETTINGS page opens.
3. From GROUP menu (B), select HEADER.
4. From PARAMETER menu (C), select REEL VERTICAL POSITION.

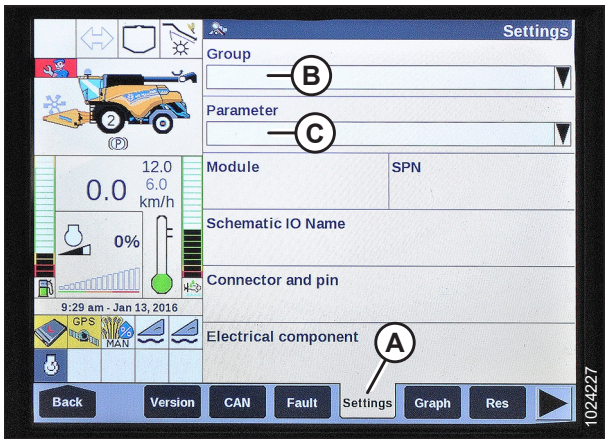

Figure 3.567: New Holland Combine Display

5. Select GRAPH tab (A). The REEL VERTICAL POSITION graph displays.
6. Lower the reel to view high voltage (B). The voltage should be 4.1–4.5 V.
7. Raise the reel to view low voltage (C). The voltage should be 0.5–0.9 V.
8. If either voltage is out of range, refer to *Checking and Adjusting Reel Height Sensor, page 118*.

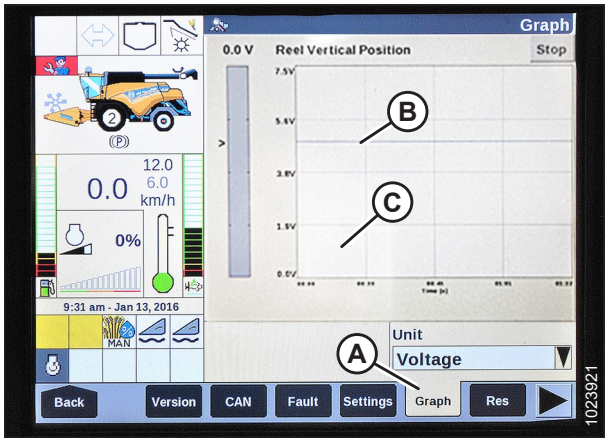

Figure 3.568: New Holland Combine Display

Setting Preset Cutting Height – New Holland CR Series

NOTE:

This section applies only to 2015 and later CR models (6.80, 6.90, 7.90, 8.90, 9.90, and 10.90). For other pre-2015 New Holland combine models, refer to *3.9.18 New Holland Combines – CR/CX Series – 2014 and Prior, page 320*.

The console has two buttons used for auto height presets. The toggle switch that was present on previous models is now configured as shown at right. MacDon headers only require first two buttons (A) and (B). Third button (C) is not configured.

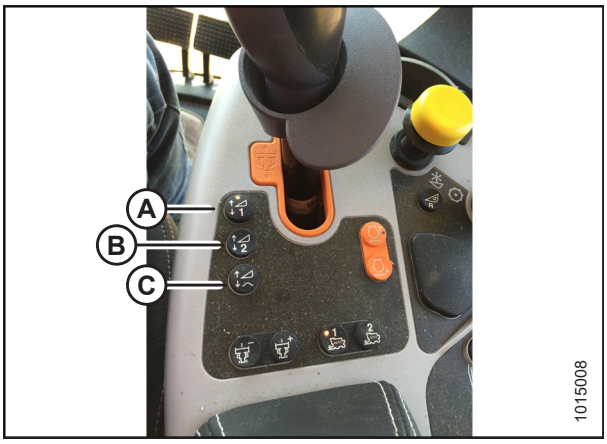

Figure 3.569: New Holland Combine Controls

WARNING

Check to be sure all bystanders have cleared the area.

To set preset cutting height, follow these steps:

1. Engage separator and header.
2. Select preset button 1 (A). A yellow light on the button will illuminate.
3. Raise or lower the header to the desired cutting height.



Figure 3.570: New Holland Combine Controls

4. Hold RESUME button (C) on the multifunction handle to set the preset.

   NOTE:

   When setting presets, always set header position before setting reel position. If header and reel are set at the same time, the reel setting will not save.

5. Raise or lower the reel to the desired working position.
6. Hold RESUME button (C) on multifunction handle to set the preset.
7. Repeat Step *2, page 343* to Step *6, page 343*, using preset button 2.



Figure 3.571: New Holland Combine Multifunction Handle

8. Lower header to the ground.
9. Select RUN SCREENS (A) on the main screen.

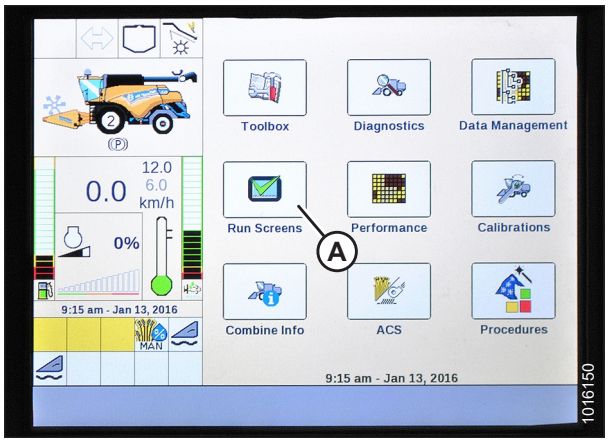

Figure 3.572: New Holland Combine Display

10. Select the RUN tab that shows MANUAL HEIGHT.

    NOTE:

    The MANUAL HEIGHT field may appear on any of the RUN tabs. When an auto height preset button is pressed, the display will change to AUTO HEIGHT (A).

11. Press one of the auto height preset buttons to select a preset cutting height.

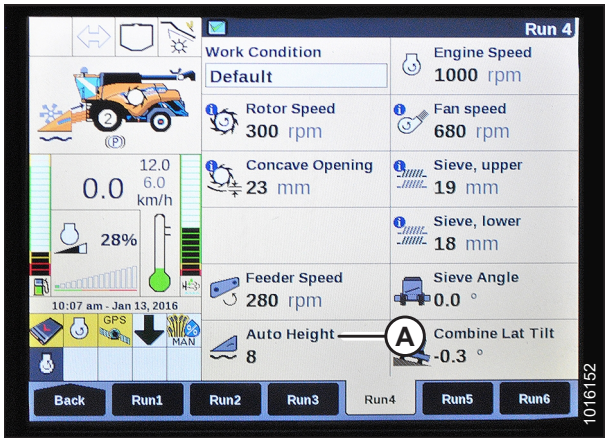

Figure 3.573: New Holland Combine Display

Setting Maximum Work Height – New Holland CR Series

NOTE:

This section applies only to 2015 and later CR models (6.80, 6.90, 7.90, 8.90, 9.90, and 10.90). For other pre-2015 New Holland combine models, refer to *3.9.18 New Holland Combines – CR/CX Series – 2014 and Prior, page 320*.

1. Select TOOLBOX (A) on the main screen. The TOOLBOX screen displays.

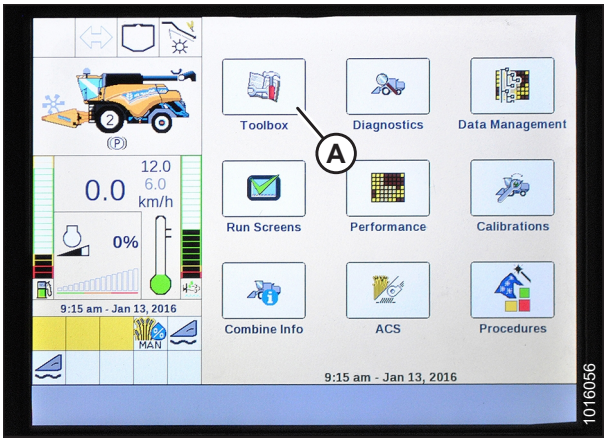

Figure 3.574: New Holland Combine Display

2. Select FEEDER (A). The FEEDER SETUP screen displays.
3. Select MAXIMUM WORK HEIGHT field (B).

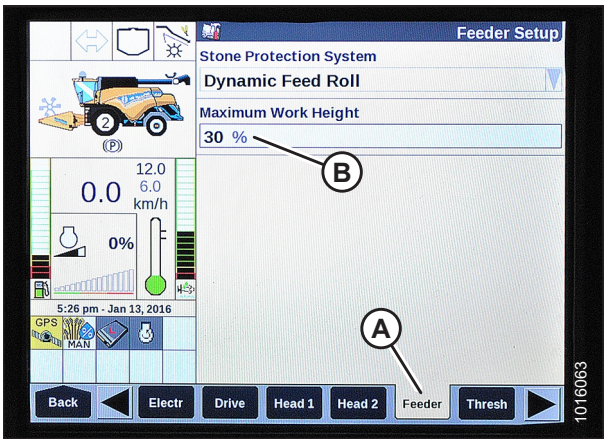

Figure 3.575: New Holland Combine Display

4. Set MAXIMUM WORK HEIGHT to desired value.
5. Press SET and then press ENTER.

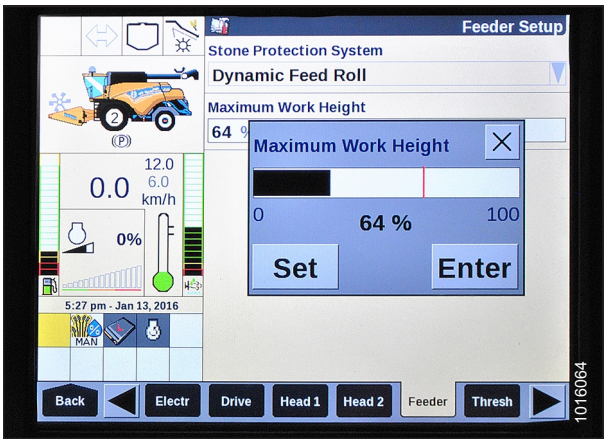

Figure 3.576: New Holland Combine Display

Configuring Reel Fore-Aft, Header Tilt, and Header Type – New Holland CR Series

This procedure applies only to 2016 New Holland CR models 6.90, 7.90, 8.90, and 9.90.

NOTE:

Changes may have been made to the combine controls or display since this document was published. Refer to the combine operator's manual for updates.

1. Simultaneously press UNLOAD (A) and RESUME (B) buttons on the control handle.



Figure 3.577: New Holland Combine Controls

2. On the HEAD 1 screen, change the CUTTING TYPE from FLEX to PLATFORM as shown at location (A).

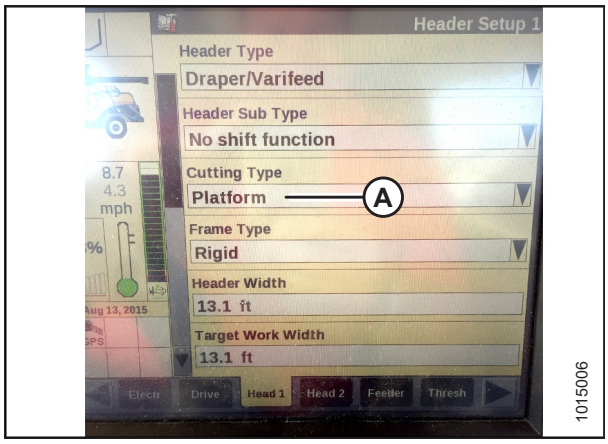

Figure 3.578: New Holland Combine Display

3. On the HEAD 2 screen, change HEADER SUB TYPE from DEFAULT to 80/90 as shown at location (A).

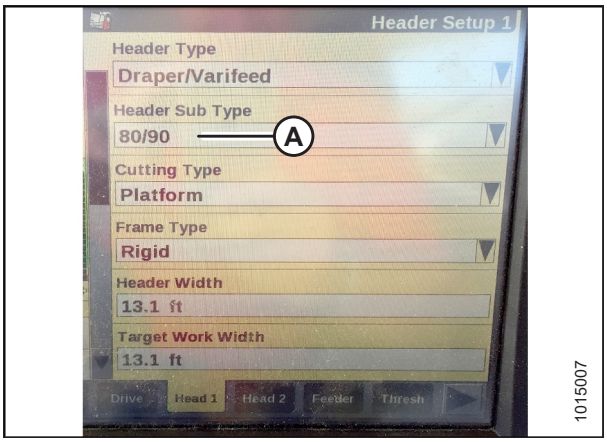

Figure 3.579: New Holland Combine Display

There are now two different buttons for ON GROUND presets. The toggle switch that was present on previous models is now configured as shown at right. MacDon headers only require first two buttons (A) and (B). Third button down (C) is not configured.

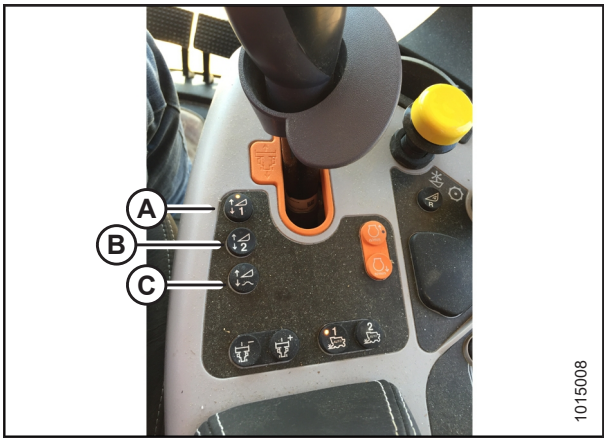

Figure 3.580: New Holland Combine Controls

3.10 Leveling the Header

The float module is factory-set to provide the proper level for the header and should not normally require adjustment.

If the header is **NOT** level, perform the following checks prior to adjusting the leveling linkages:

- Check the combine tire pressures.
- Check that the combine feeder house is level. For instructions, refer to your combine operator's manual.
- Check that the top of the float module is level and parallel with the feeder house.

NOTE:

The float springs are **NOT** used to level the header.

WARNING

To avoid injury or death from unexpected start-up of machine, always stop the engine and remove the key from the ignition before leaving the operator's seat for any reason.

1. Park the combine on level ground.
2. Set the header approximately 150 mm (6 in.) off the ground, and check that the float linkage is against the down stops. Note the high and low end of the header.
3. Shut down the engine and remove the key.
4. Check, and if necessary adjust the float. For instructions, refer to *Checking and Adjusting Header Float, page 95*.
5. Adjust the header level by making small adjustments (1/4–1/2 turn) to nut (A) on each float lock. Adjust each side equally but in opposite directions as follows:

   NOTE:

   Setscrew (B) does not require loosening for adjustments up to one-half turn of nut (A).

   a. On low side of header, turn nut (A) **clockwise** to raise header.

   b. On high side of header, turn nut (A) **counterclockwise** to lower header.

   NOTE:

   Adjustment of more than two turns in either direction may adversely affect header float.

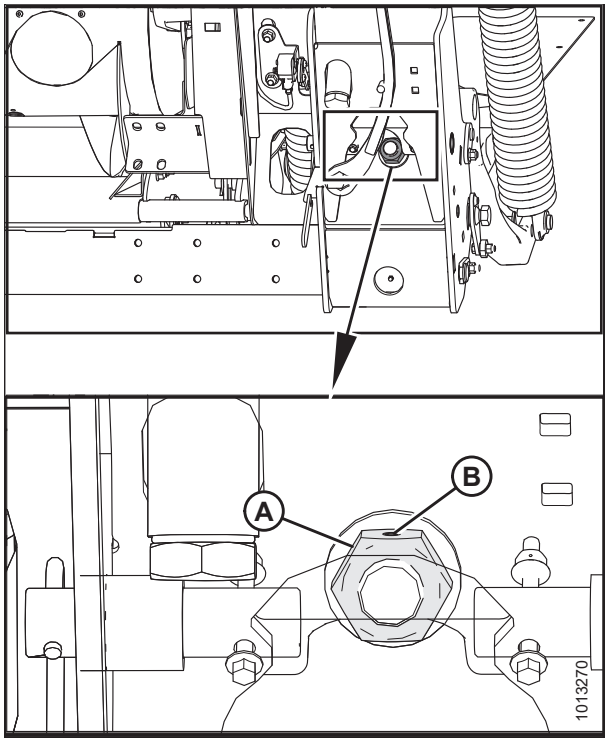

Figure 3.581: Float Lock

NOTE:

Ensure a minimum clearance of 2–3 mm (1/8 in.) (A) between the frame and the back of the bell crank lever.

NOTE:

Check the float after leveling header. For instructions, refer to *Checking and Adjusting Header Float, page 95*.

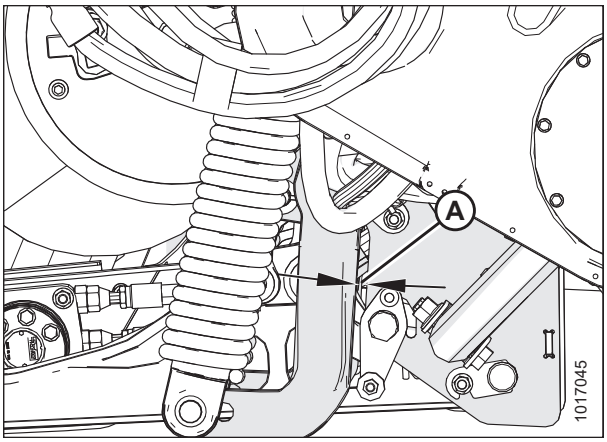

Figure 3.582: Bell Crank

3.11 Unplugging the Cutterbar

DANGER

To avoid bodily injury or death from unexpected start-up or fall of a raised machine, always stop engine and remove key before leaving the operator's seat, and always engage safety props before going under the machine for any reason.

CAUTION

Wear heavy gloves when working around or handling knives.

CAUTION

Lowering rotating reel on a plugged cutterbar will damage the reel components.

To unplug cutterbar, reverse the combine feeder house. If the cutterbar is still plugged, do the following:

1. Stop the forward movement of the machine and disengage the header drives.
2. Raise the header to prevent it from filling with dirt, and engage the header drive clutch.
3. If plug does **NOT** clear, disengage the header drive clutch and fully raise the header.
4. Shut down the engine, and remove the key from the ignition.
5. Engage the header safety props.
6. Clean off the cutterbar by hand.

   NOTE:

   If cutterbar plugging persists, refer to *7 Troubleshooting, page 643*.

3.12 Unplugging the FM100

1. Stop the forward movement of the machine and disengage the header drives.
2. Raise the header slightly off the ground, and raise the reel.
3. Reverse the combine feed according to the manufacturer specifications (reverse feed varies among different combine models).
4. Engage the header drive.

3.13 Upper Cross Auger

The upper cross auger (UCA) (A) improves delivery of very bulky crops across the header.

IMPORTANT:

If the UCA is installed, a case drain line must be installed on the right draper motor. See your MacDon Dealer for details.

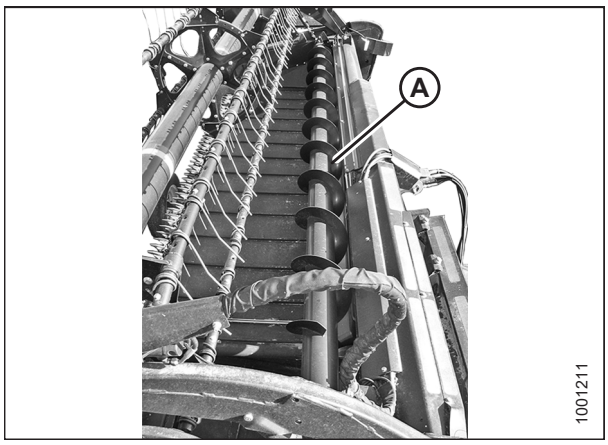

Figure 3.583: Upper Cross Auger

3.13.1 Removing Upper Cross Auger Flighting

A short section of flighting can be removed from the inboard ends of the upper cross auger (UCA) to accommodate crops that are prone to wrapping or if the flighting is damaged and needs to be replaced. Follow these steps to remove flighting:

DANGER

To avoid bodily injury or death from unexpected start-up or fall of a raised machine, always stop engine and remove key before leaving the operator's seat, and always engage safety props before going under the machine for any reason.

1. Lower header to ground and fully raise reel. Stop engine, and remove key from ignition.
2. Engage reel safety props.
3. Remove bolts (A) securing clamp sets (B) to flighting.
4. Remove bolts (C) in clamp sets (B) and remove clamps from auger tube.
5. Slightly twist flighting (D) away from auger tube and remove.

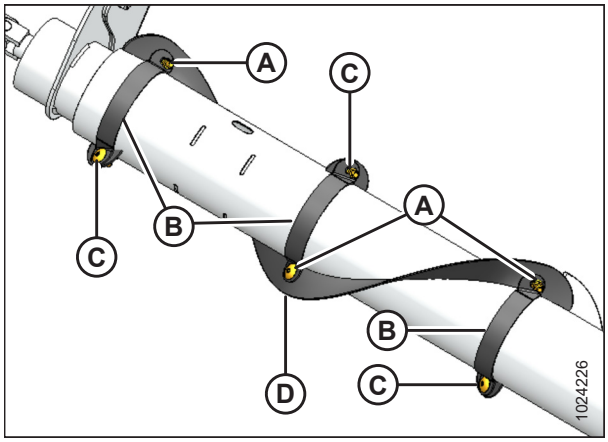

Figure 3.584: Right Auger, Left Auger Opposite

3.13.2 Installing Upper Cross Auger Flighting

A short section of removable flighting can be installed at the inboard ends of the upper cross auger (UCA). This flighting can aid in feeding cut crop into the combine (especially when combining canola), but should not be installed when combining crops prone to wrapping on the auger. Follow these steps to install flighting:

DANGER

To avoid bodily injury or death from unexpected start-up or fall of a raised machine, always stop engine and remove key before leaving the operator's seat, and always engage safety props before going under the machine for any reason.

1. Lower header to ground and fully raise reel. Stop engine, and remove key from ignition.
2. Engage reel safety props.
3. Install flighting (A) onto auger tube. Twist flighting slightly to slide over auger tube.
4. Install clamp sets (B) on auger tube, and attach to flighting with 3/8 x 1 torx head machine screws (C) and smooth face lock nuts. Screw heads must face direction of rotation (X). Do **NOT** tighten screws (C) and lock nuts.

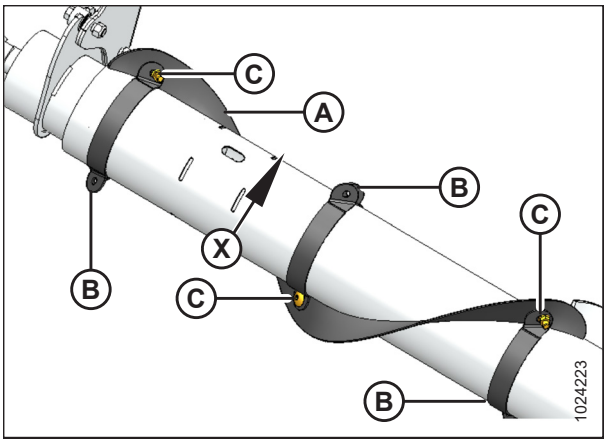

Figure 3.585: Right Auger, Left Auger Opposite

5. Position filler plates (A) between clamp (B) ends and install 3/8 x 1 torx head machine screws (C) and smooth face lock nuts. Screw heads must face direction of rotation (X). Do **NOT** tighten screws (C) and lock nuts.
6. Position end of flighting (D) against backside of existing flighting and temporarily clamp in position.
7. Tighten screws (C) and screws (E) installed in Step *4, page 353*.
8. Remove temporary clamping.

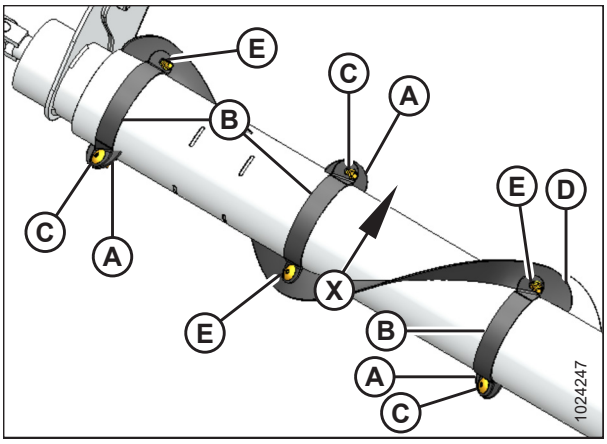

Figure 3.586: Right Auger, Left Auger Opposite

3.14 Transporting the Header

WARNING

Do NOT drive the combine with header attached on a road or highway at night, or in conditions which reduce visibility, such as fog or rain. The width of the header may not be apparent under these conditions.

3.14.1 Transporting Header on Combine

CAUTION

- **Check local laws for width regulations and lighting or marking requirements before transporting on roads.**
- **Follow all recommended procedures in your combine operator's manual for transporting, towing, etc.**
- **Disengage header drive clutch when travelling to and from the field.**
- **Before driving combine on a roadway, be sure flashing amber lamps, red tail lamps, and head lamps are clean and working properly. Pivot amber lamps for best visibility by approaching traffic. Always use lamps when travelling on roads to provide adequate warning to other vehicles.**
- **Do NOT use field lamps on roads—they may confuse other drivers.**
- **Before driving on a roadway, clean slow moving vehicle signs and reflectors, adjust rear view mirrors, and clean windows.**
- **Lower the reel fully and raise the header unless transporting in hills.**
- **Maintain adequate visibility and be alert for roadside obstructions, oncoming traffic, and bridges.**
- **When travelling downhill, reduce speed and keep header at a minimum height to provide maximum stability if forward momentum is stopped for any reason. Raise header completely at bottom of grade to avoid contacting the ground.**
- **Travel at safe speeds to ensure complete machine control and stability at all times.**

3.14.2 Towing

Headers with the Slow Speed Transport/Stabilizer Wheel option can be towed behind a properly configured MacDon windrower or an agricultural tractor. For instructions, refer to the combine operator's manual.

Attaching Header to Towing Vehicle

CAUTION

Adhere to the following slow speed transport instructions to prevent loss of control leading to bodily injury and/or machine damage:

- **Weight of towing vehicle must exceed header weight to ensure adequate control and braking performance.**
- **Do NOT tow with any highway-capable vehicle. Use only an agricultural tractor, agricultural combine, or a properly configured MacDon windrower.**
- **Ensure reel is fully lowered and back on support arms to increase header stability during transport. For headers with hydraulic reel fore-aft, never connect the fore-aft couplers to each other or the circuit will be complete and the reel could creep forward during transport.**
- **Check that all pins are properly secured in transport position at wheel supports, cutterbar support, and hitch.**
- **Check tire condition and pressure prior to transporting.**
- **Connect hitch to towing vehicle using a proper hitch pin with a spring locking pin or other suitable fastener.**
- **Attach hitch safety chain to towing vehicle. Adjust safety chain length to provide only enough slack to permit turning.**
- **Connect header seven-pole plug wiring harness to mating receptacle on towing vehicle. (The seven-pole receptacle is available from your MacDon Dealer parts department.)**
- **Ensure lights are functioning properly and clean the slow moving vehicle sign and other reflectors. Use flashing warning lights unless prohibited by law.**

Towing the Header

CAUTION

Adhere to the following slow speed transport instructions to prevent loss of control leading to bodily injury and/or machine damage:

- **Do NOT exceed 32 km/h (20 mph).**
- **Reduce transport speed to less than 8 km/h (5 mph) for slippery or rough conditions**
- **Turn corners at only very low speeds (8 km/h [5 mph] or less) as header stability is reduced while cornering. Do NOT accelerate when making or coming out of a turn.**
- **Obey all highway traffic regulations in your area when transporting on public roads. Use flashing amber lights unless prohibited by law.**

3.14.3 Converting from Transport to Field Position

Removing Tow-Bar

1. Block the tires to prevent the header from rolling, and unhook the header from the towing vehicle.
2. Disconnect electrical connector (A) on the tow-bar.
3. Remove pin (B) from the tow-bar, and disassemble outer section (C) from inner section (D).

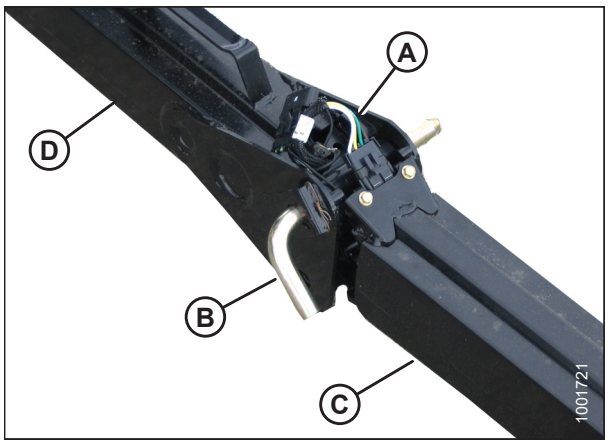

Figure 3.587: Tow-Bar Assembly

4. Disconnect electrical connector (A) at the front wheel.

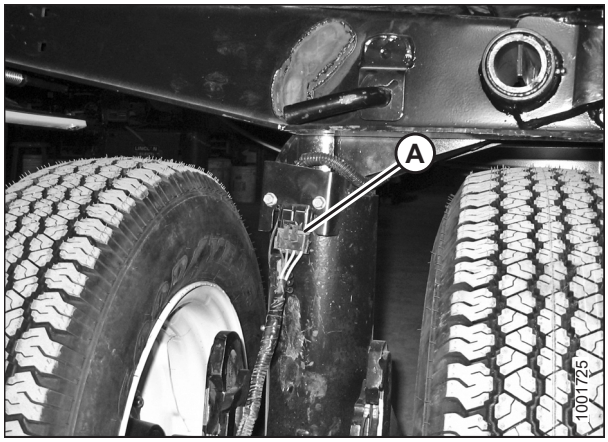

Figure 3.588: Wiring Connector

5. Remove clevis pin (A) and set aside for reinstallation.
6. Push latch (B) and lift tow-bar (C) from the hook. Release latch.
7. Install clevis pin (A).

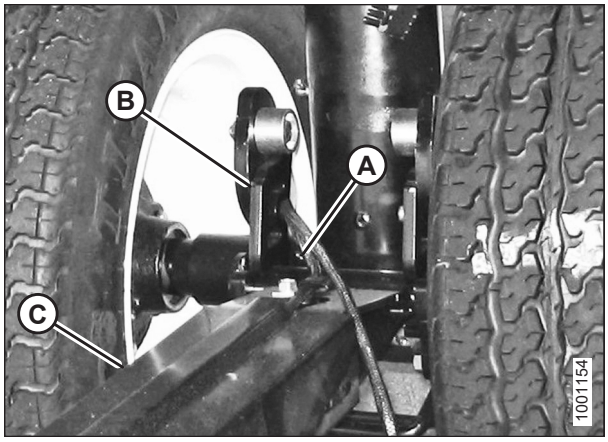

Figure 3.589: Tow-Bar Latch

Storing the Tow-Bar

The tow-bar consists of two sections, an inner half (A) and an outer half (B), to make storage and handling easier.

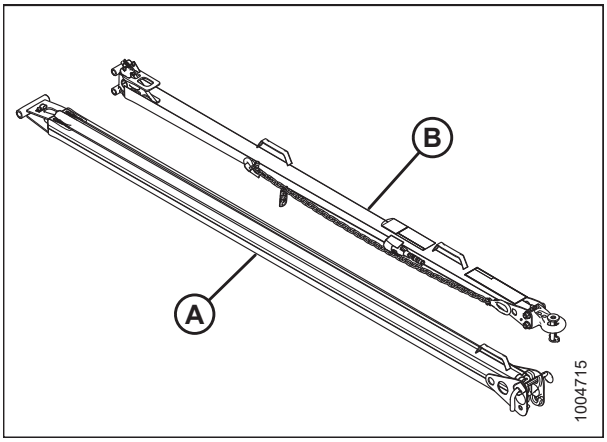

Figure 3.590: Tow-Bar Assembly

1. Place the inner end of the outer half of the tow-bar into the cradle (A) on the left side of the header backtube.
2. Secure clevis/pintle end of the tow-bar in support (B) on the endsheet using hitch pin (C). Secure with lynch pin.
3. Install rubber strap (D) on cradle (A).

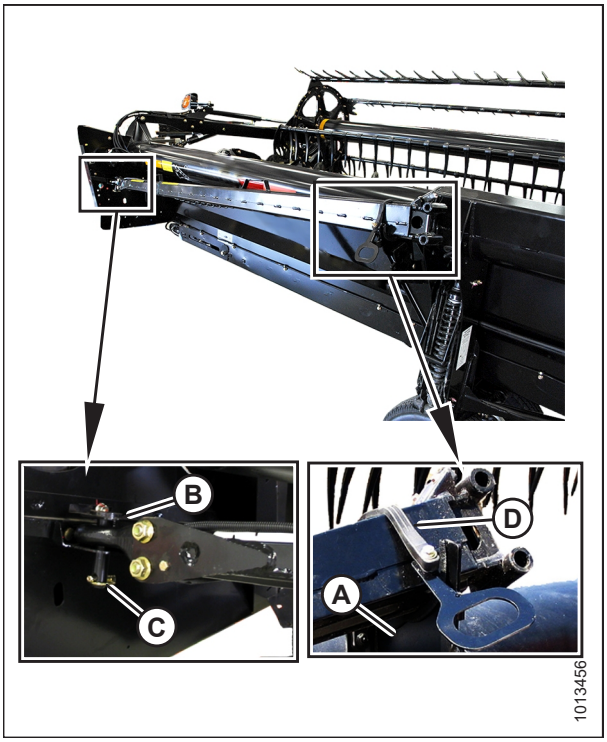

Figure 3.591: Tow-Bar Storage – Left Side

4. Place the inner end of the inner half of the tow-bar into the cradle (A) on the right side of the header backtube.
5. Secure the tube end of the tow-bar in support (B) on the endsheet using clevis pin (C). Secure with hairpin.
6. Install rubber strap (D) on cradle (A).

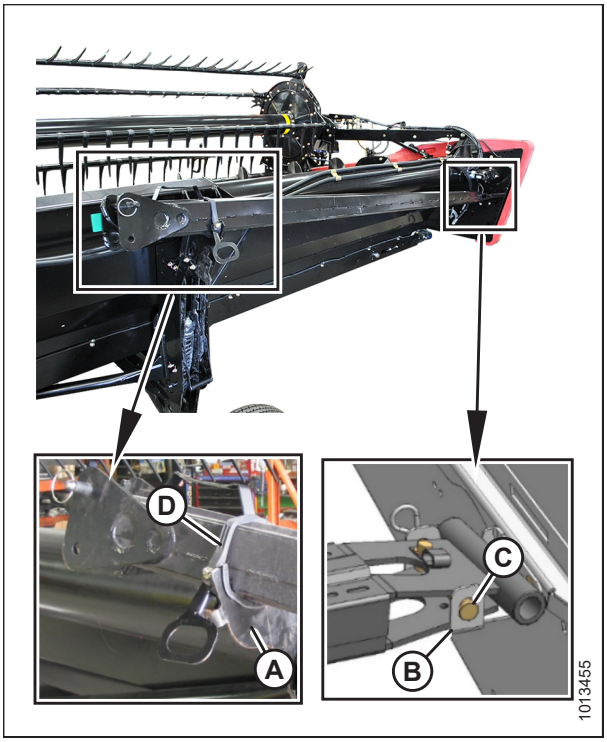

Figure 3.592: Tow-Bar Storage – Right Side

7. Attach the header to the combine. For instructions, refer to the combine operator's manual.

   IMPORTANT:

   Carrying the tow-bar on the header will affect the main header float. For instructions, refer to the combine operator's manual.

8. Place the transport wheels into field position. For instructions, refer to the following:
   - *Moving Front (Left) Wheels into Field Position, page 359*
   - *Moving Rear (Right) Wheels into Field Position, page 360*

Moving Front (Left) Wheels into Field Position

DANGER

To avoid bodily injury or death from unexpected start-up or fall of raised machine, always stop engine, remove key, and engage safety props before going under header for any reason.

1. Raise the header fully and engage the header safety props.
2. Swivel the front wheel assembly (A) so the wheels are aligned with the lower frame.
3. Remove pin (B) and pull the wheel assembly towards the rear of the header. Store the pin in hole (C) at the top of the leg.
4. Pull handle (D) upwards to release and lower the linkage into the vertical support.

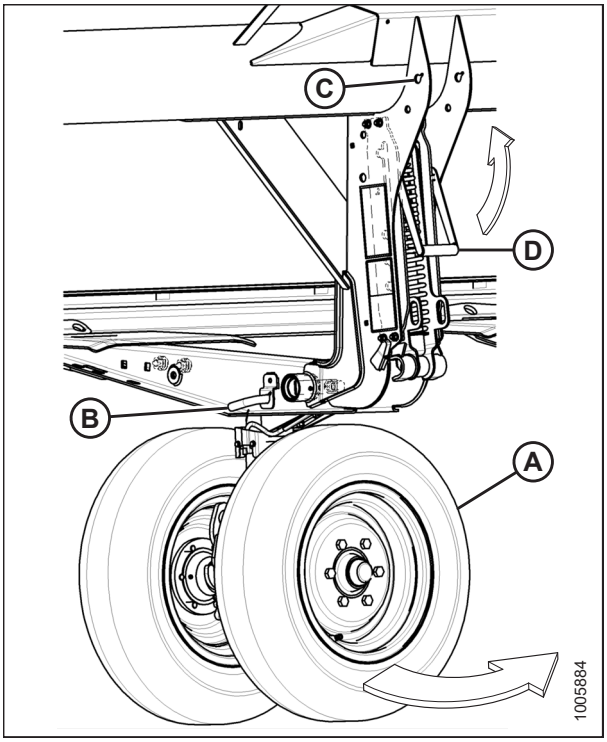

Figure 3.593: Front Wheels

5. Align lift hook (A) with lug (B) and lift the wheel assembly to engage the pin in the lift hook. Ensure latch (C) is engaged.
6. Install clevis pin (D) and secure to the center of the axle with hairpin.

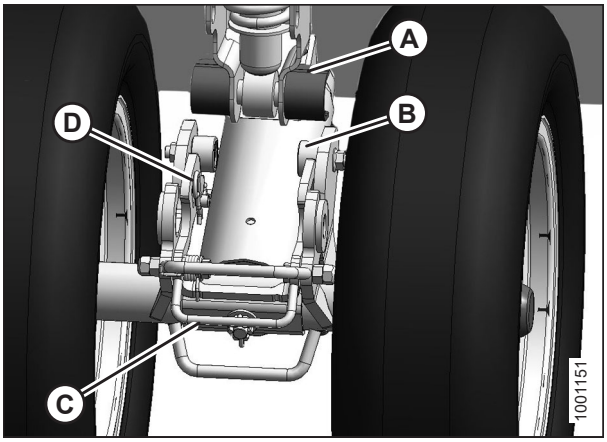

Figure 3.594: Front Wheels

7. Lift the wheel assembly to the desired height and slide linkage (A) into the appropriate slot in the vertical support.
8. Push down on handle (B) to lock.

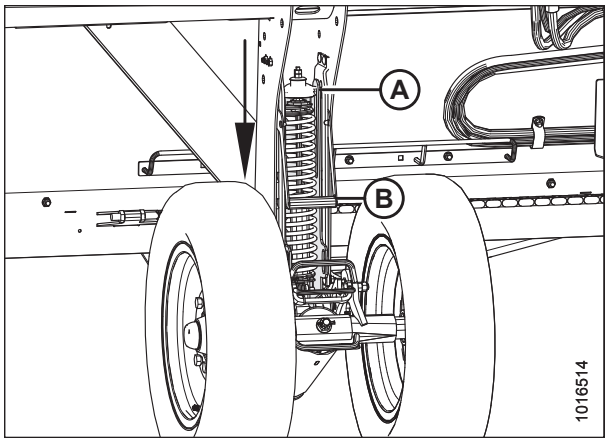

Figure 3.595: Front Wheels

Moving Rear (Right) Wheels into Field Position

1. Pull pin (A) on the left rear wheel. Swivel the wheel clockwise and lock with pin.

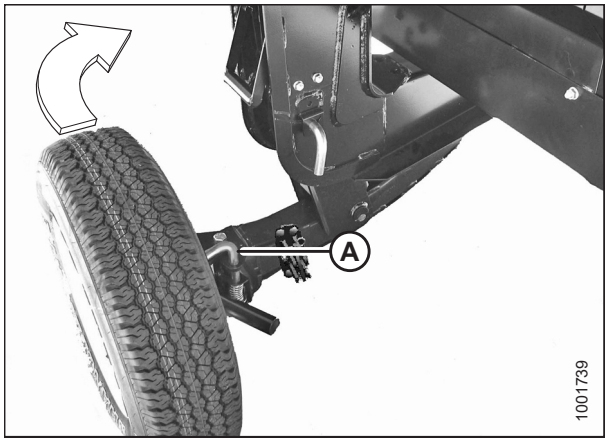

Figure 3.596: Rear Wheel – Right Side

2. Remove pin (A) and store at location (B).
3. Pull handle (C) upwards to release.
4. Lift the wheel to the desired height, and engage the support channel into slot (D) in the vertical support.
5. Push down on handle (C) to lock.

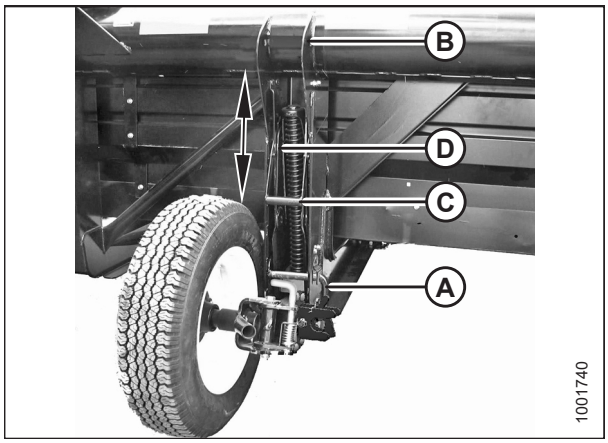

Figure 3.597: Rear Wheel – Right Side

6. Pull pin (A) on brace (B) on the right wheel in front of the cutterbar. Disengage the brace from the cutterbar, and lower the brace against axle (C).
7. Remove pin (D), lower support (E) onto axle, and reinsert pin into support.
8. Swing axle (C) clockwise towards the rear of the header.

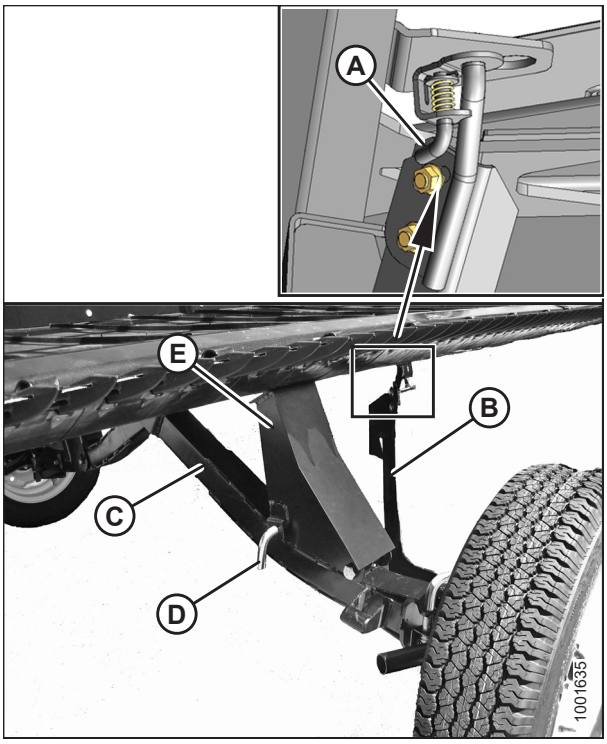

Figure 3.598: Rear Wheel – Right Side

9. Pull pin (A) on right axle, swivel the wheel counterclockwise to position shown, and lock with pin (A).
10. Remove hairpin (B) from latch (C).
11. Lift the wheel, lift latch (C), and engage lug (D) onto the left axle. Ensure the latch closes.
12. Secure the latch with hairpin (B), ensuring the open end of the pin faces the rear of the combine.

    IMPORTANT:

    Check that the wheels are locked and that the handle is in the locked position.

    NOTE:

    The hairpin can become dislodged by crop if installed with the open end facing the cutterbar.

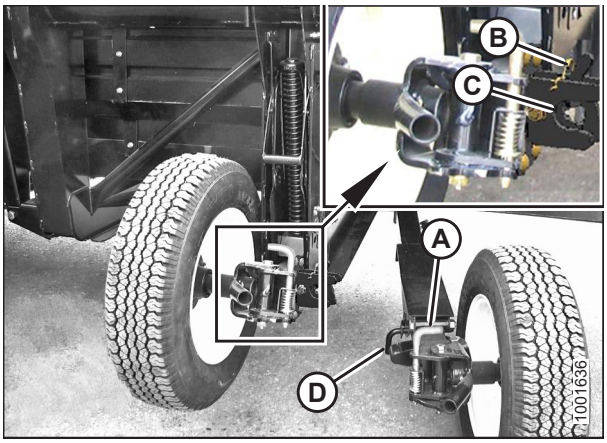

Figure 3.599: Rear Wheels

13. Complete the conversion by ensuring left side wheels (A) and right side wheels (B) are in the position shown.

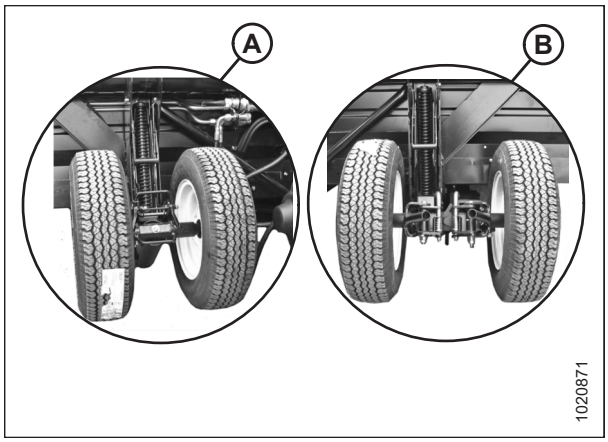

Figure 3.600: Field Position

3.14.4 Converting from Field to Transport Position

Moving Front (Left) Wheels into Transport Position

DANGER

To avoid bodily injury or death from unexpected start-up or fall of raised machine, always stop engine, remove key, and engage safety props before going under header for any reason.

CAUTION

Stand clear of wheels and release linkage carefully as wheels will drop once the mechanism is released.

1. Pull handle (B) upwards to release and raise linkage (A) fully upwards into the vertical support.
2. Raise the header fully.
3. Shut down the engine, and remove the key from the ignition.
4. Engage the header safety props.

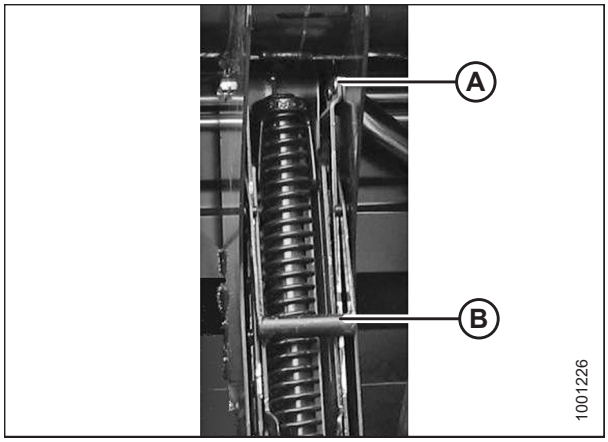

Figure 3.601: Suspension Linkage

5. Remove the hairpin and clevis pin (A).
6. Pull the latch handle (B) to release suspension linkage (C), and pull the suspension linkage away from spindle (D).
7. Lower the wheels slowly.

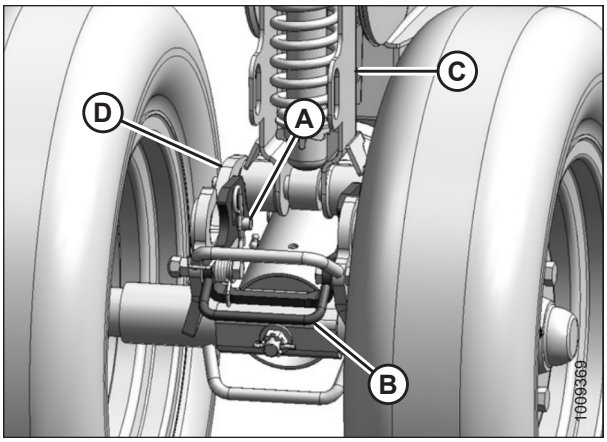

Figure 3.602: Left Front Wheels

8. Lower handle (A) to lock.

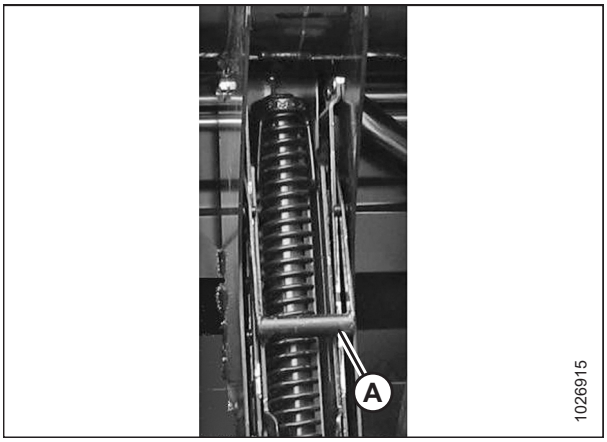

Figure 3.603: Suspension Linkage

9. Remove pin (A) from storage at the top of leg (B).
10. Move and swivel the wheels clockwise until connector (C) is turned towards the front end of the header.
11. Insert pin (A) and turn to lock.
12. Lower the header until the left wheels are just touching the ground.

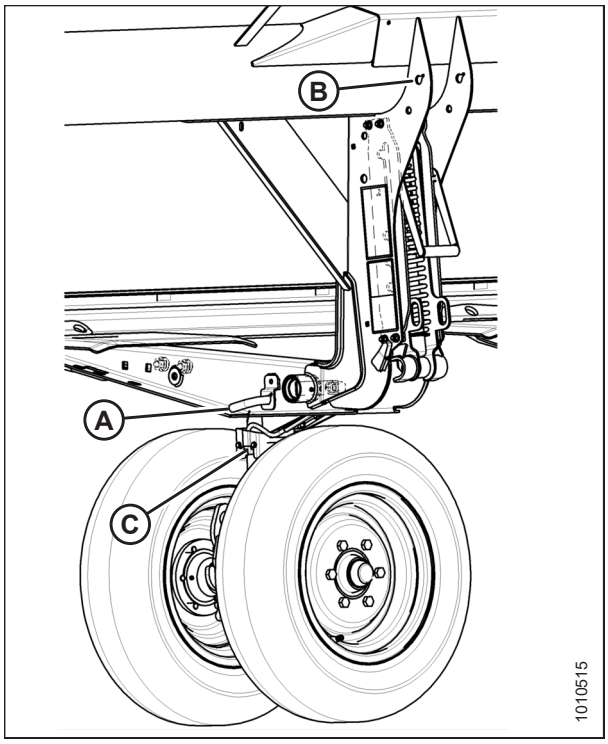

Figure 3.604: Left Front Wheels

Moving Rear (Right) Wheels into Transport Position

1. Remove hairpin (A) from latch (B).
2. Lift latch (B), disengage right axle (C), and lower to the ground.

CAUTION

Stand clear of wheels and release linkage carefully as wheels will drop once the mechanism is released.

3. Pull handle (D) carefully to release the spring and lower the wheel to the ground.
4. Lift the wheel and linkage with handle (E) and position the linkage in the bottom slot.
5. Lower handle (C) to lock.

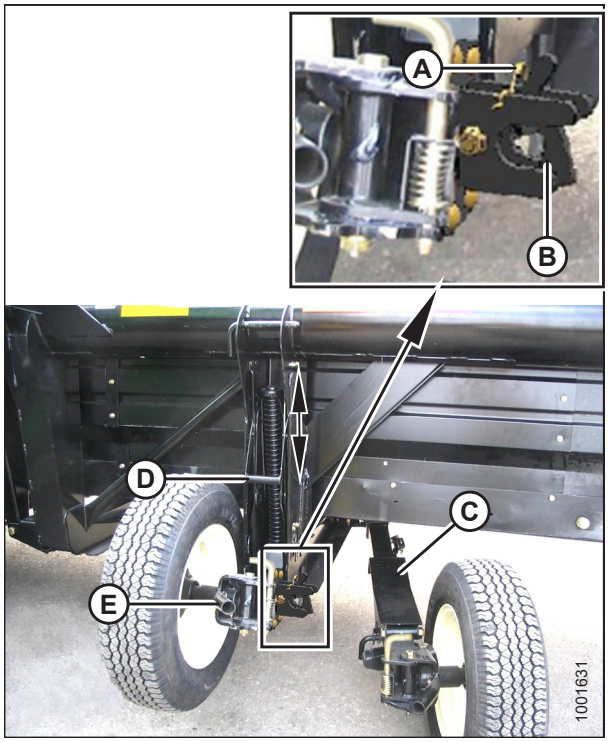

Figure 3.605: Rear Wheels

6. Remove pin (A) and install at location (B) to secure the linkage. Turn the pin to lock.
7. Pull pin (D), swivel wheel (C) counterclockwise 90°, and release the pin to lock.

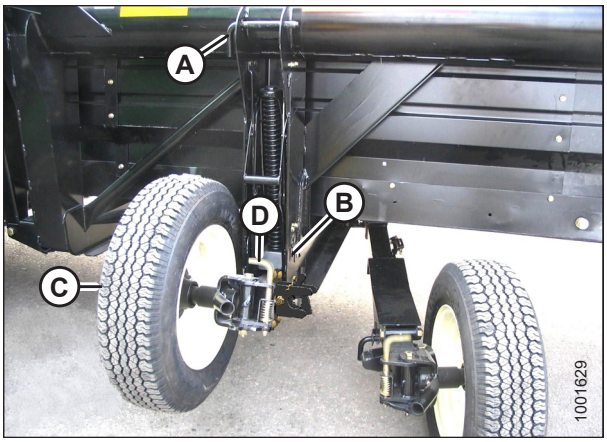

Figure 3.606: Rear Wheels

8. Ensure the left wheel is in the transport position as shown.



Figure 3.607: Left Wheel in Transport Position

9. Pull pin (A) and swivel right rear wheel (B) clockwise 90°.

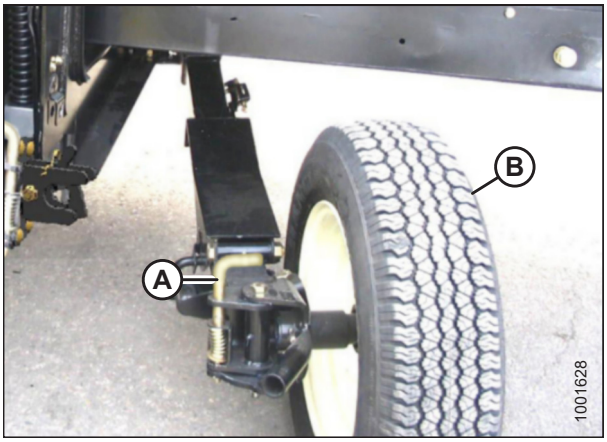

Figure 3.608: Right Rear Wheel

10. Lock wheel (A) with pin (B). Move right axle (C) to the front of the header.

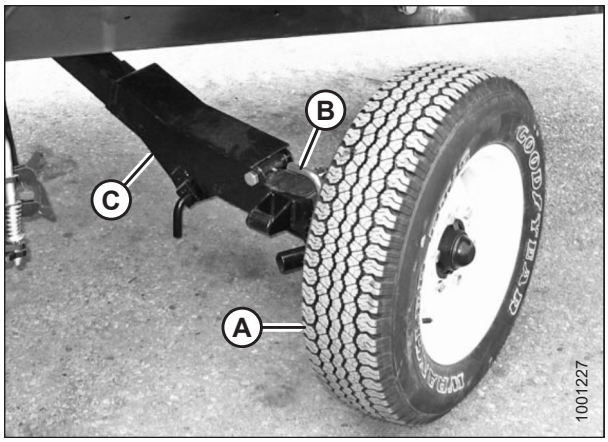

Figure 3.609: Right Rear Wheel

11. Remove pin (A), raise support (B) to the position shown, and reinsert pin.

    IMPORTANT:

    Ensure pin (A) engages the tube on the axle.

12. Swing brace (C) into the position shown and insert the brace into slot (D) behind the cutterbar. Position the brace so that pin (E) engages the hole in bracket (F). The right wheel is now in transport position.
13. Disengage the header cylinder lift stops.
14. Detach the header's hydraulic and electrical connections from the combine. For instructions, refer to *4 Header Attachment/Detachment, page 371*.
15. Start the combine and lower the header to the ground.

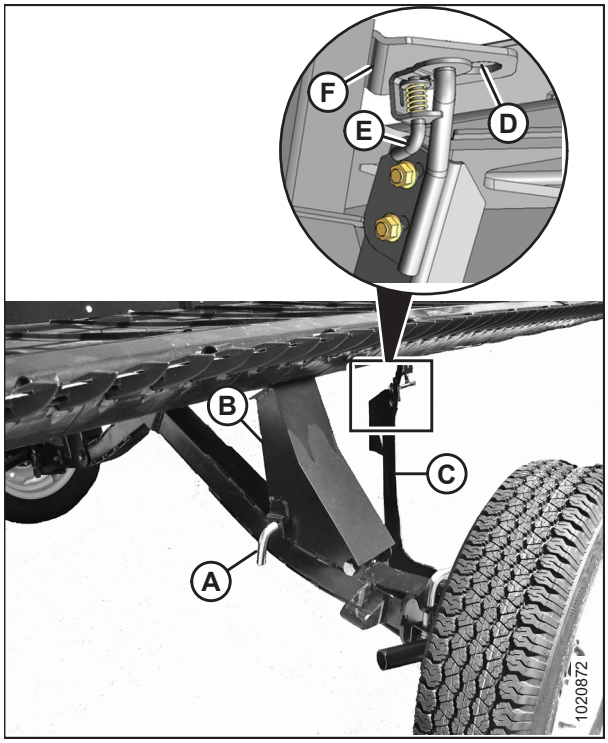

Figure 3.610: Right Rear Wheel Position

Attaching Tow-Bar

The tow-bar consists of two sections which make storage and handling easier.

1. Unhook rubber strap (D) from cradle (A) on the right side of the header.
2. Remove clevis pin (C) and detach the tube end from support (B).
3. Replace clevis pin (C).
4. Lift the inner half of the tow-bar off the header and place it near the left side of the header.

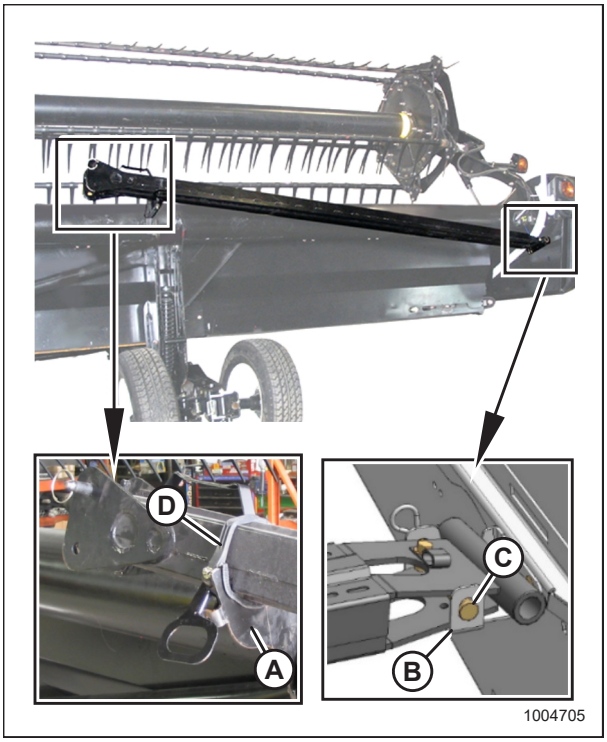

Figure 3.611: Tow-Bar Removal – Right Side

5. Unhook rubber strap (D) from cradle (A) on the left side of the header.
6. Remove hitch pin (C) from support (B), and remove the tow-bar.
7. Install rubber strap (D) on cradle (A).

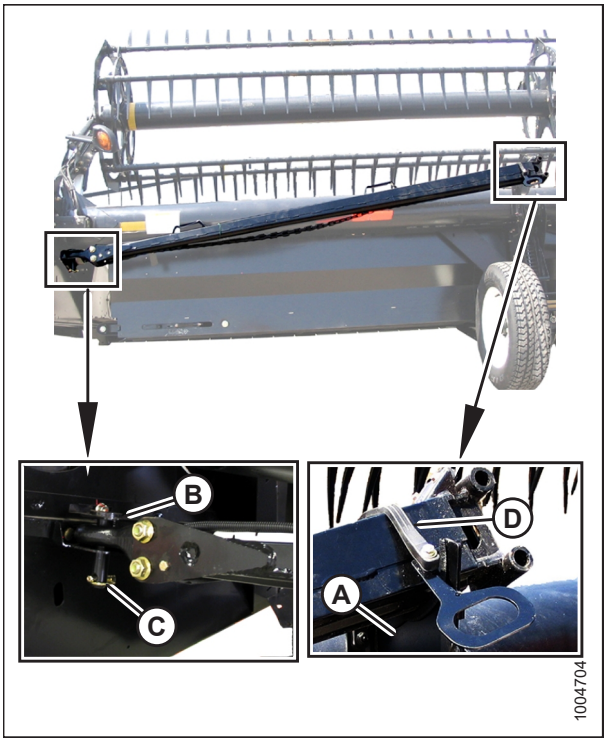

Figure 3.612: Tow-Bar Removal – Left Side

8. Connect outer half (B) of the tow-bar to inner half (A).

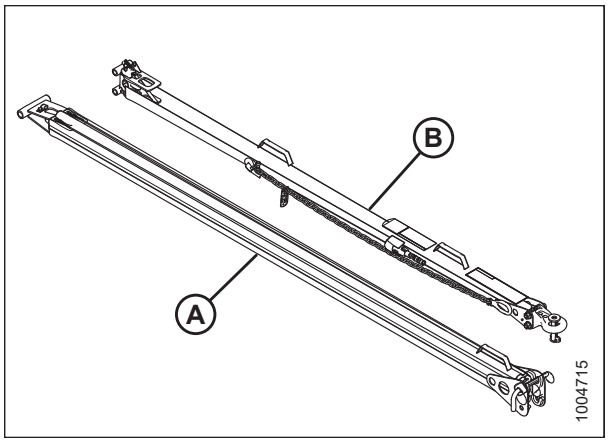

Figure 3.613: Tow-Bar Assembly

9. Lift outer half (B) and insert it into inner half (A).

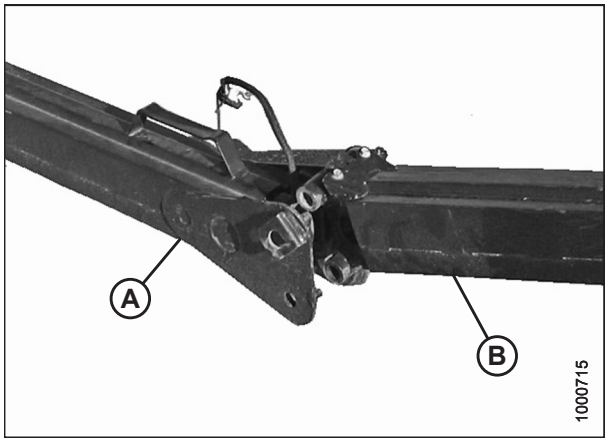

Figure 3.614: Tow-Bar Assembly

10. Secure the two halves together with L-pin (A) and then turn to lock. Secure L-pin with ring (B).
11. Connect the electrical harness to connector (C).

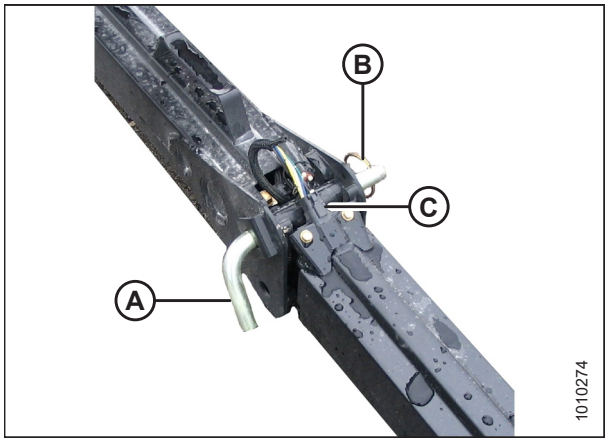

Figure 3.615: Tow-Bar Assembly

12. Position tow-bar (A) onto the axle, and push against latch (B) until the tow-bar pins drop into hooks (C).
13. Check that latch (B) has engaged the tow-bar.
14. Install clevis pin (D) and secure with hairpin.

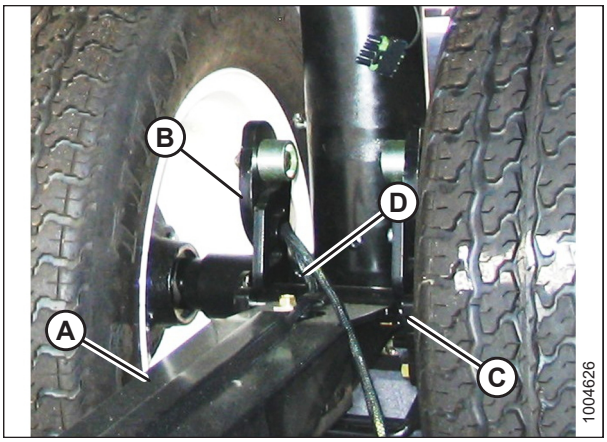

Figure 3.616: Attaching Tow-Bar

15. Connect electrical harness (A) at the front wheel.

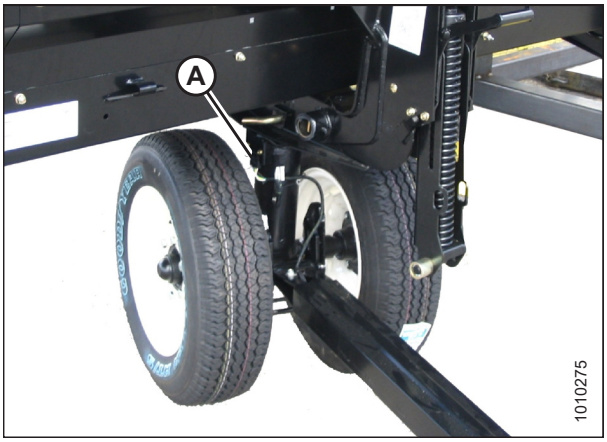

Figure 3.617: Harness Connection

3.15 Storing the Header

Perform the following procedures at the end of each operating season:

CAUTION

Never use gasoline, naphtha, or any volatile material for cleaning purposes. These materials may be toxic and/or flammable.

CAUTION

Cover cutterbar and knife guards to prevent injury from accidental contact.

1. Clean the header thoroughly.
2. Store the machine in a dry, protected place if possible. If storing outside, always cover with a waterproof canvas or other protective material.

   NOTE:

   If storing the machine outside, remove the drapers and store them in a dark, dry place. If not removing the drapers, store the header with the cutterbar lowered so water and snow will not accumulate on the drapers. The weight of water and snow accumulation puts excessive stress on the drapers and header.
3. Lower the header onto blocks to keep the cutterbar off the ground.
4. Lower the reel completely. If stored outside, tie the reel to the frame to prevent rotation caused by the wind.
5. Repaint all worn or chipped painted surfaces to prevent rust.
6. Loosen the drive belts.
7. Lubricate the header thoroughly leaving excess grease on the fittings to keep moisture out of the bearings.
8. Apply grease to exposed threads, cylinder rods, and sliding surfaces of components.
9. Check for worn components and repair as necessary.
10. Check for broken components and order replacements from your Dealer. Immediate repair of these items will save time and effort at the beginning of next season.
11. Replace or tighten any missing or loose hardware. Refer to *8.1 Torque Specifications, page 653*.

Chapter 4: Header Attachment/Detachment

This chapter includes instructions for setting up, attaching, and detaching the header.

Combine	Refer to
Case IH 7010/8010, 120, 130, 230, 240, 250 Series	*4.2 Case IH Combines, page 372*
Gleaner R and S Series, Challenger 660, 670, 680B, 540C, 560C, Massey Ferguson 9690, 9790, 9895, 9520, 9540, 9560	*4.3 AGCO (Challenger, Gleaner, and Massey Ferguson) Combines, page 380*
AGCO IDEAL™ Series	*3.9.4 AGCO IDEAL™ Series Combines, page 163*
John Deere 60, 70, S, and T Series	*4.5 John Deere Combines, page 394*
CLAAS 500, 700 (R Series)	*4.6 CLAAS Combines, page 401*
New Holland CR, CX	*4.7 New Holland Combines, page 408*

NOTE:

Ensure the applicable functions (e.g., Automatic Header Height Control [AHHC], draper header option, hydraulic center-link option, hydraulic reel drive) are enabled on the combine and the combine computer. Failure to do so may result in improper header operation.

4.1 FM100 Setup

The following sections outline the recommended float module setup guidelines for your specific combine model and crop type; however, the recommendations cannot cover all conditions.

If feeding problems develop with the float module, refer to *7 Troubleshooting, page 643*.

4.1.1 Using Auger Flighting

The auger flighting on the FM100 can be configured for specific combines and crop conditions. For instructions, refer to *3.8.1 FM100 Feed Auger Configurations, page 62* for combine/crop specific configurations.

4.1.2 Using Stripper Bars

Stripper bar kits may have been supplied with your header to improve feeding in certain crops such as rice.

For servicing information, refer to *5.11 FM100 Stripper Bars and Feed Deflectors, page 547*.

4.2 Case IH Combines

4.2.1 Attaching Header to Case IH Combine

WARNING

To avoid injury or death from unexpected start-up of machine, always stop the engine and remove the key from the ignition before leaving the operator's seat for any reason.

1. On the combine, ensure lock handle (A) is positioned so hooks (B) can engage the float module.

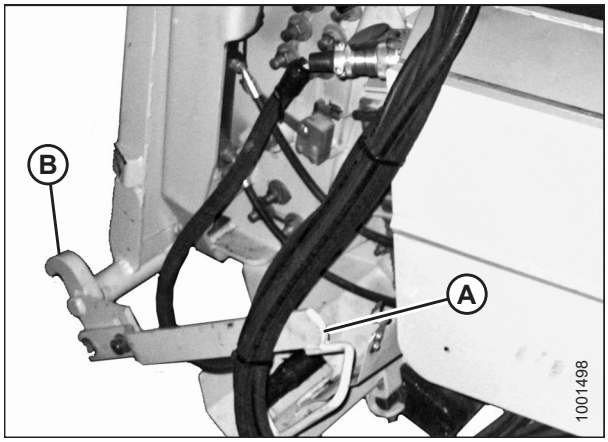

Figure 4.1: Feeder House Locks

WARNING

Never start or move the machine until you are sure all bystanders have cleared the area.

2. Start the engine and slowly drive the combine up to the header until feeder house saddle (A) is directly under float module top cross member (B).
3. Raise the feeder house slightly to lift the header, ensuring the feeder saddle is properly engaged in the float module frame.
4. Shut down the engine, and remove the key from the ignition.

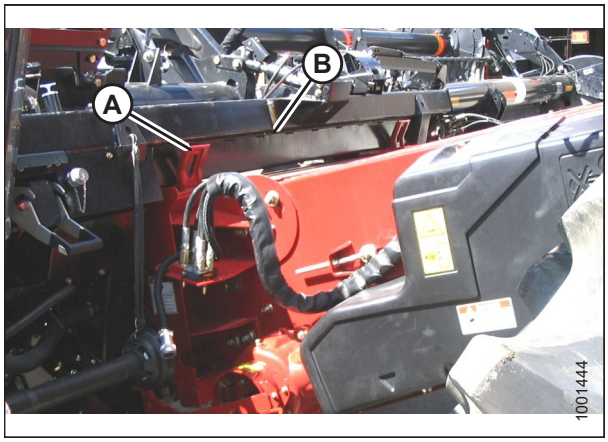

Figure 4.2: Combine and Float Module

5. On the left side of the feeder house, lift lever (A) on the float module and push handle (B) on the combine to engage locks (C) on both sides of the feeder house.
6. Push down on lever (A) so the slot in the lever engages the handle and locks the handle in place.
7. If lock (C) does not fully engage the pin on the float module, loosen bolts (D) and adjust lock. Retighten bolts.

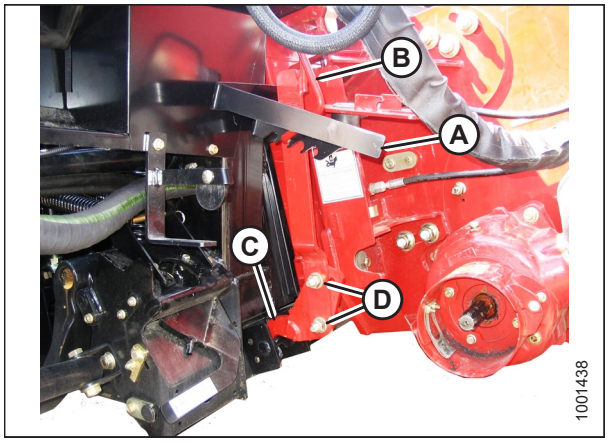

Figure 4.3: Combine and Float Module

8. Open the cover on receptacle (A) located on the left side of the float module.
9. Press lock button (B) and pull handle (C) to the fully-open position.
10. Clean the receptacle mating surfaces.

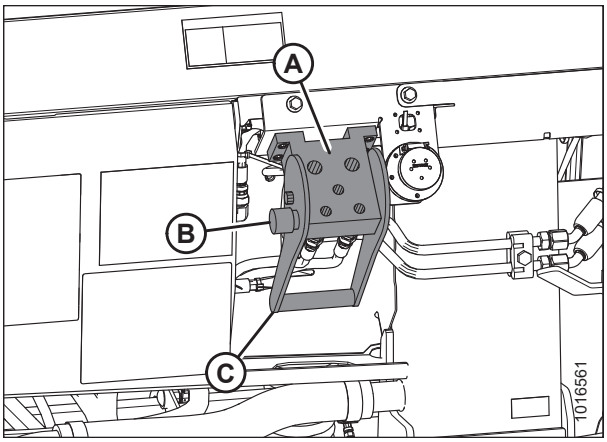

Figure 4.4: Float Module Receptacle

11. Remove hydraulic quick coupler (A) from the combine, and clean the mating surfaces.

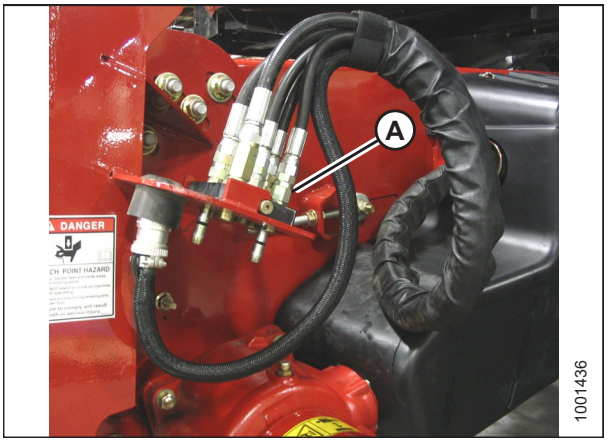

Figure 4.5: Combine Connectors

12. Position the coupler onto coupler receptacle (A) and push handle (B) (not shown) to engage the multicoupler pins into the receptacle.
13. Push handle (B) to the closed position until lock button (C) snaps out.

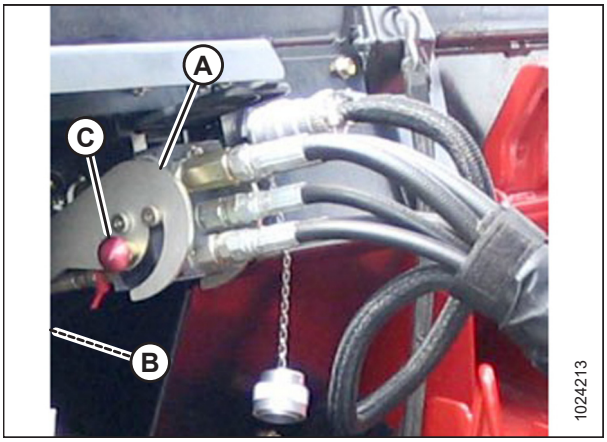

Figure 4.6: Hydraulic Connection

14. Remove the cover from electrical receptacle (A). Ensure the receptacle is clean and has no signs of damage.

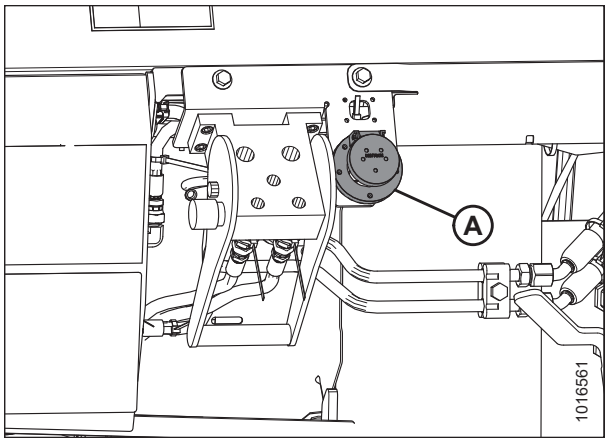

Figure 4.7: Electrical Receptacle

15. Remove electrical connector (A) from the storage cup on the combine and route it to the float module receptacle.

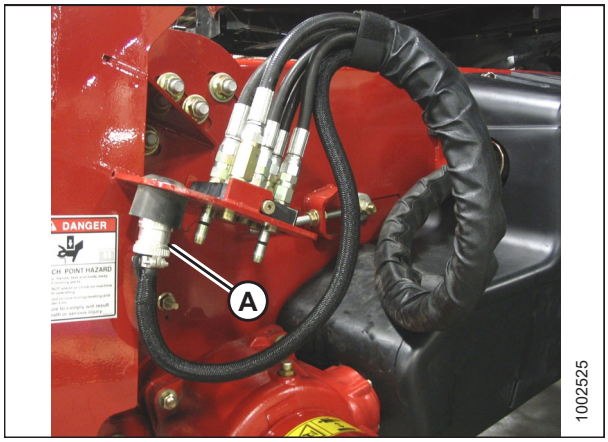

Figure 4.8: Combine Connectors

16. Align the lugs on connector (A) with the slots in receptacle (B), push the connector onto the receptacle, and turn the collar on the connector to lock it in place.

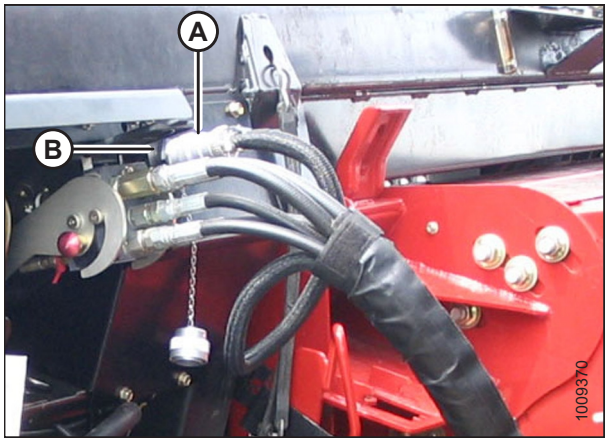

Figure 4.9: Electrical Connection

17. Detach safety chain (C) from support bracket (B).
18. Pull collar (D) back to release driveline (A) from support bracket. Remove the driveline from support bracket.

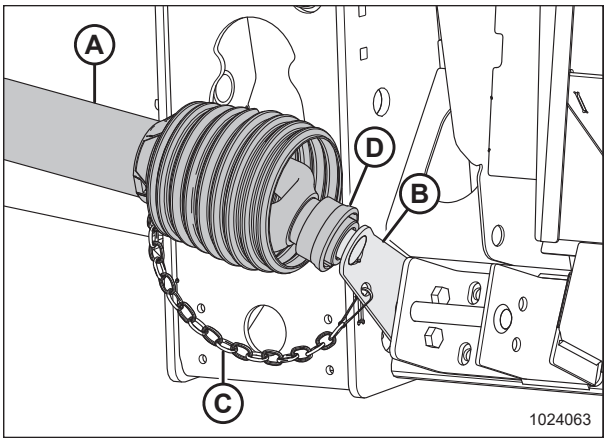

Figure 4.10: Driveline in Storage Position

19. Pull back collar (A) on the end of the driveline, and push the driveline onto combine output shaft (B) until the collar locks.

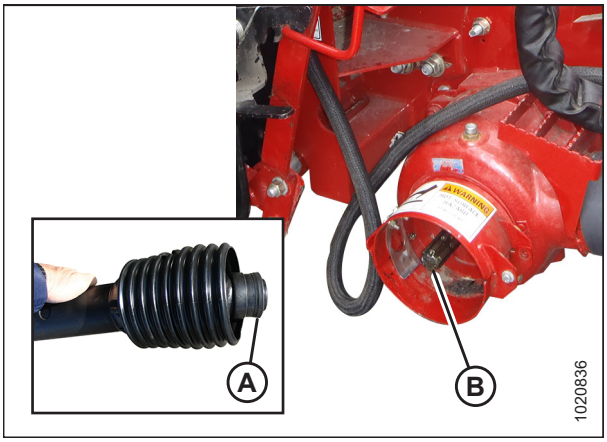

Figure 4.11: Combine Output Shaft

20. Disengage the float locks by pulling each float lock handle (A) away from the float module and setting it in unlocked position (B).

    NOTE:

    Illustration at right shows the right side of the header. Float lock on left side of header opposite.

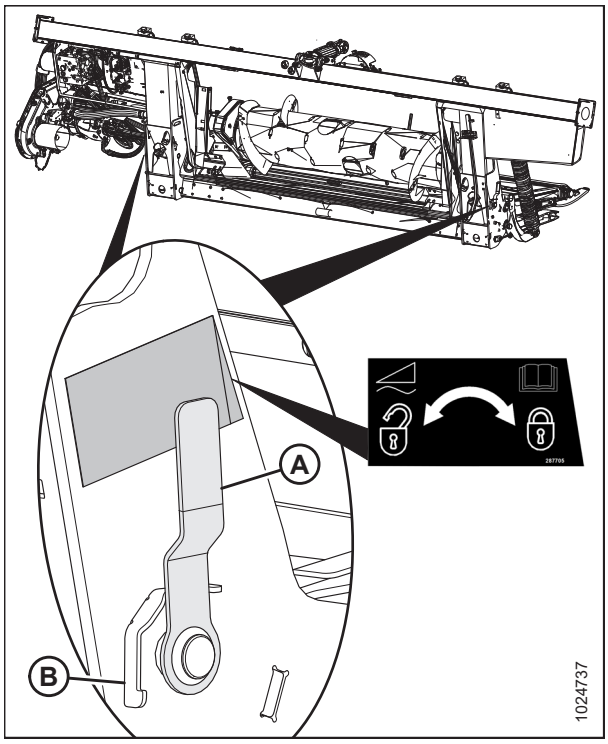

Figure 4.12: Float Lock Handle

4.2.2 Detaching Header from Case IH Combine

DANGER

To avoid bodily injury or death from unexpected start-up or fall of raised machine, always stop engine, remove key, and engage safety props before going under header for any reason.

1. Park the combine on a level surface.
2. Position the header slightly above the ground.
3. Shut down the engine, and remove the key from the ignition.

   IMPORTANT:

   If slow speed transport wheels are installed, the header may be detached in either transport or field mode. If detaching with the wheels in field mode, set the wheels to the storage or uppermost working position, otherwise the header may tilt forward, making reattachment difficult. For instructions, refer to *Adjusting Stabilizer / Slow Speed Transport Wheels, page 90*.

   IMPORTANT:

   If stabilizer wheels are installed, set the wheels to the storage or uppermost working position, otherwise the header may tilt forward, making reattachment difficult. For instructions, refer to *Adjusting Stabilizer Wheels, page 88*.
4. Engage the float locks by pulling each float lock handle (A) away from the float module and setting it in locked position (B).

   NOTE:

   Illustration at right shows the right side of the header. Float lock on left side of header opposite.
5. Push back collar (A) on the end of the driveline and pull the driveline out of combine output shaft (B) until the collar disengages.

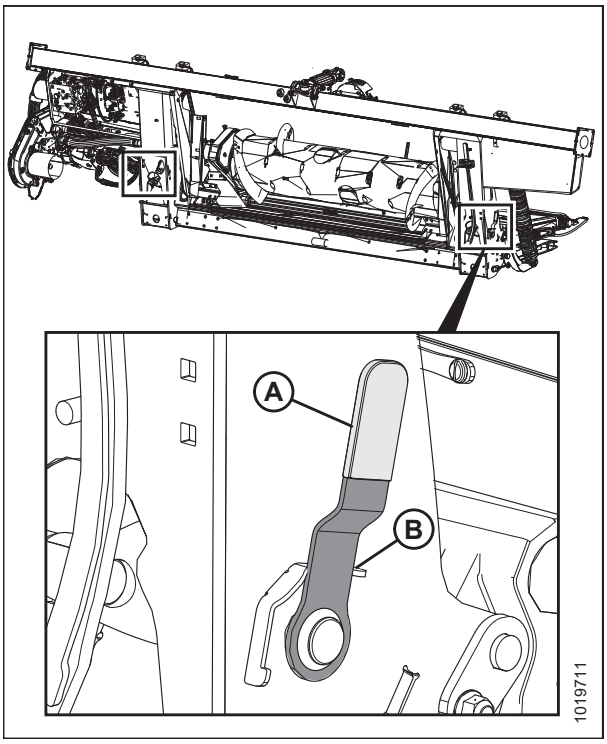

Figure 4.13: Float Lock Handle

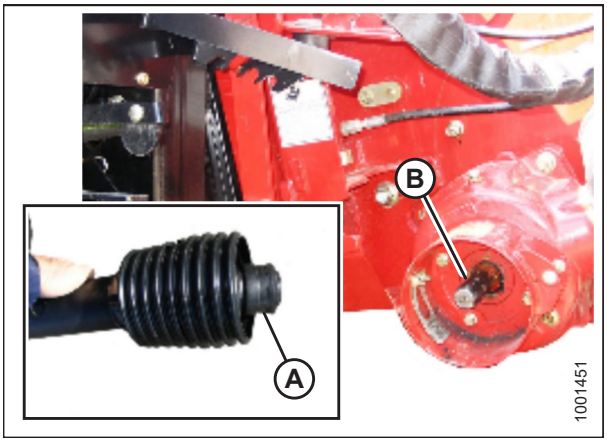

Figure 4.14: Driveline

6. Store driveline (A) on driveline support bracket (B) by pulling back collar (C) on the driveline and fitting it over support bracket body (D). Release the collar so it locks into place over the support bracket body.
7. Attach safety chain (E) to support bracket (B).

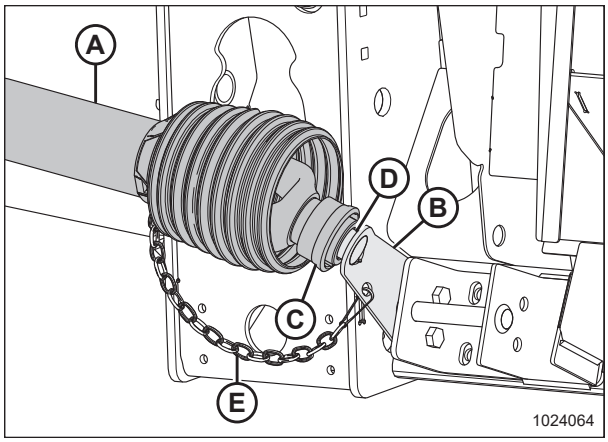

Figure 4.15: Driveline

8. Remove electrical connector (A) and replace cover (B).
9. Push in lock button (C) and pull handle (D) to release multicoupler (E).

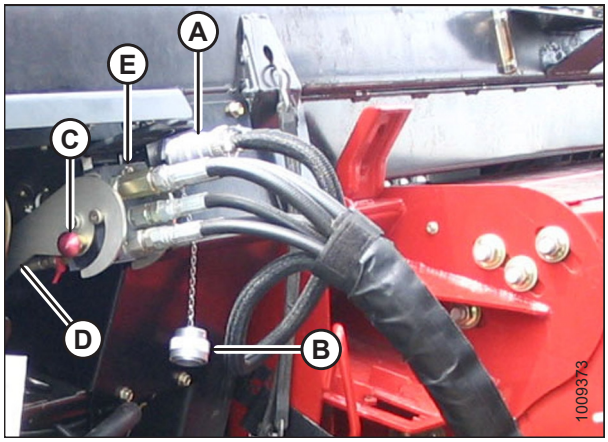

Figure 4.16: Multicoupler

10. Position multicoupler (A) onto storage plate (B) on the combine.
11. Place the electrical connector (C) in the storage cup (D).

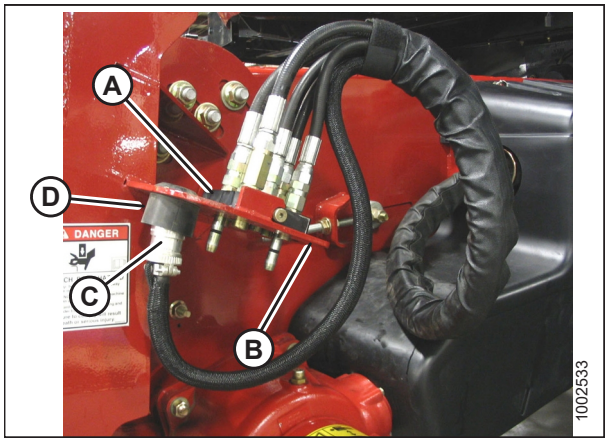

Figure 4.17: Multicoupler Storage

12. Push handle (A) on the float module receptacle to the closed position until lock button (B) snaps out. Close the cover.

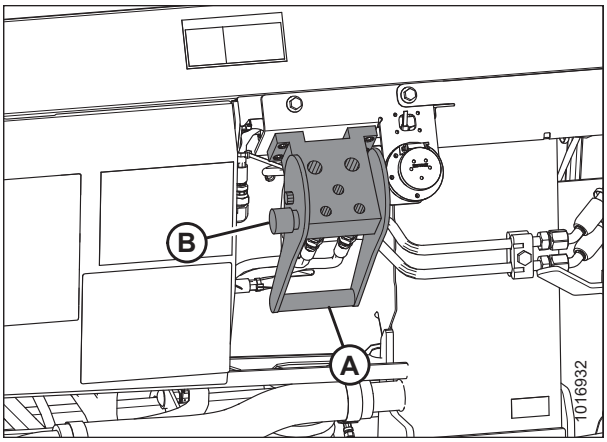

Figure 4.18: Float Module Receptacle

13. Lift lever (A) and pull and lower handle (B) to disengage feeder house/float module lock (C).
14. Lower the feeder house until it disengages the float module support.
15. Back the combine away slowly from the float module.

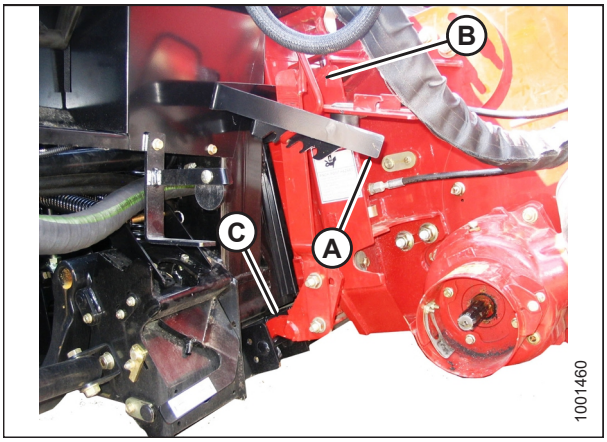

Figure 4.19: Feeder House Locks

4.3 AGCO (Challenger, Gleaner, and Massey Ferguson) Combines

4.3.1 Attaching Header to an AGCO (Challenger, Gleaner, or Massey Ferguson) Combine

WARNING

To avoid injury or death from unexpected start-up of machine, always stop the engine and remove the key from the ignition before leaving the operator's seat for any reason.

1. Shut down the engine, and remove the key from the ignition.
2. Use lock handle (B) to retract lugs (A) at the base of the feeder house.

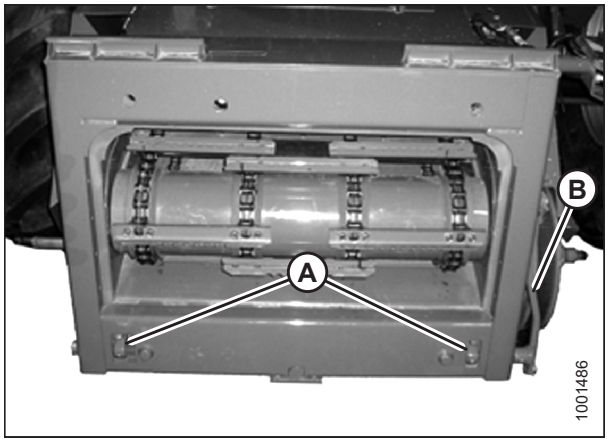

Figure 4.20: AGCO Group Feeder House

WARNING

Never start or move the machine until you are sure all bystanders have cleared the area.

3. Start the engine and slowly approach the header until the feeder house is directly under float module top cross member (A) and alignment pins (C) (refer to Figure *4.22, page 381*) on the feeder house are aligned with holes (B) in the float module frame.

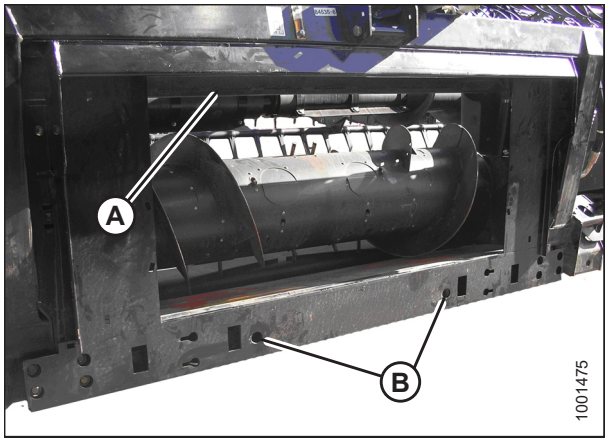

Figure 4.21: Float Module

NOTE:

Your combine feeder house may not be exactly as shown.

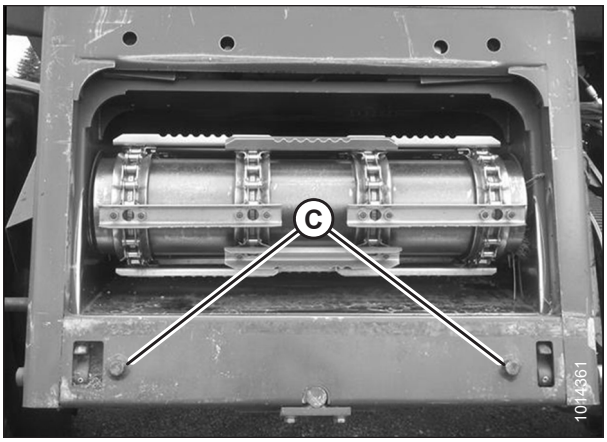

Figure 4.22: AGCO Group Alignment Pins

4. Raise the feeder house slightly to lift the header, ensuring feeder house saddle (A) is properly engaged in the float module frame.
5. Shut down the engine, and remove the key from the ignition.

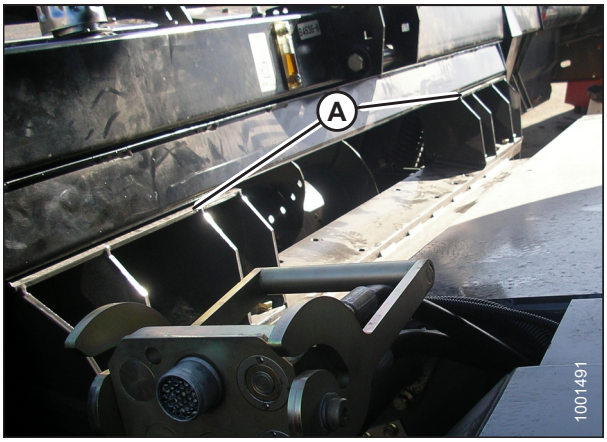

Figure 4.23: Feeder House and Float Module

6. Use lock handle (B) to engage lugs (A) with the float module.

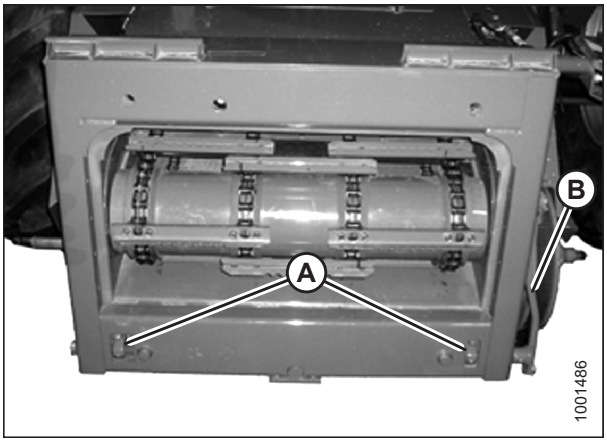

Figure 4.24: AGCO Group Feeder House

WARNING

Never start or move the machine until you are sure all bystanders have cleared the area.

7. Start the engine. For instructions, refer to the combine operator's manual.
8. Lower the header fully.

NOTE:

The float module is equipped with a multicoupler that connects to the combine. If your combine is equipped with individual connectors, a multicoupler kit (single-point connector) must be installed. Refer to Table *4.1, page 382* for a list of kits and installation instructions that are available through your combine Dealer.

Table 4.1 Multicoupler Kits

Combine	AGCO Kit Number
Challenger	71530662
Gleaner R/S Series	71414706
Massey Ferguson	71411594

9. Disengage the float locks by pulling each float lock handle (A) away from the float module and setting it in unlocked position (B).

NOTE:

Illustration at right shows the right side of the header. Float lock on left side of header opposite.

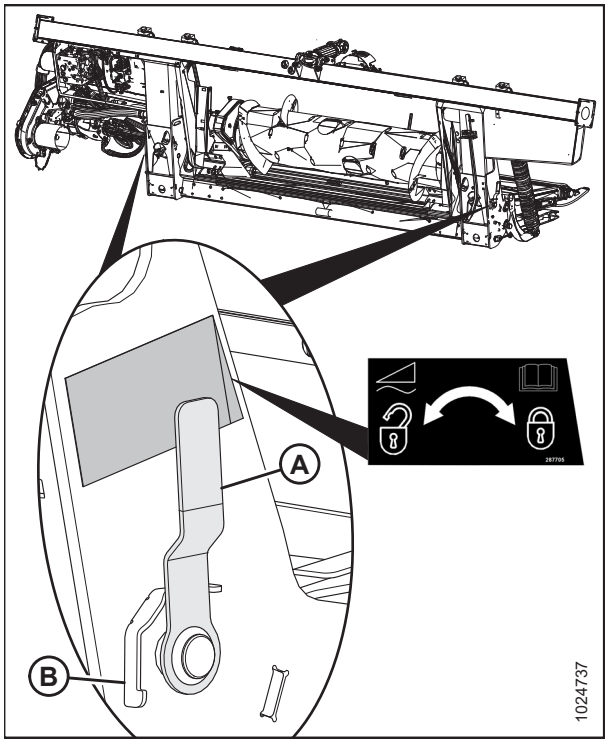

Figure 4.25: Float Lock Handle

10. Raise handle (A) to release multicoupler (B) from float module.

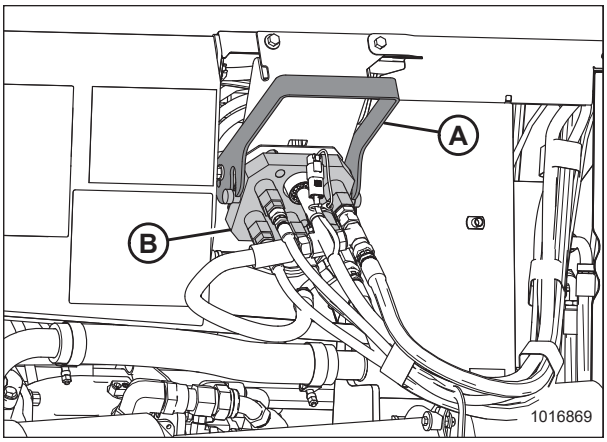

Figure 4.26: Float Module Multicoupler

11. Push handle (A) on the combine to the fully-open position.
12. Clean the mating surfaces of multicoupler (B) and receptacle if necessary.

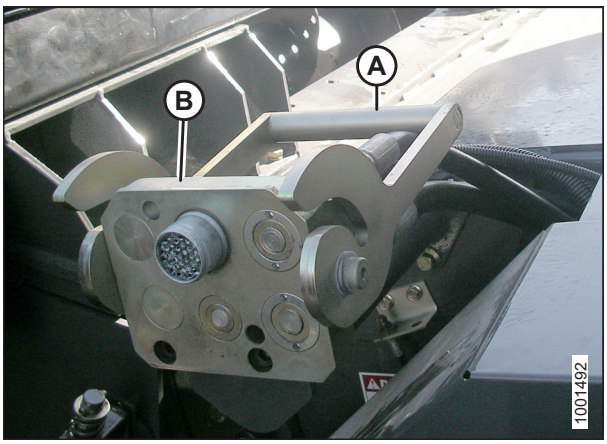

Figure 4.27: Combine Receptacle

13. Position multicoupler (A) onto the combine receptacle, and pull handle (B) to fully engage the multicoupler into the receptacle.
14. Connect reel fore-aft/header tilt selector harness (C) to combine harness (D).

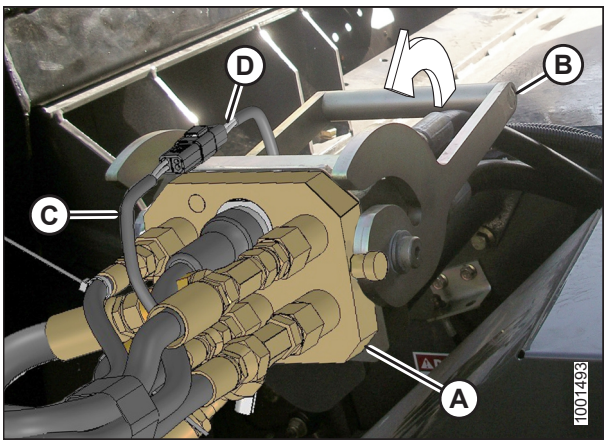

Figure 4.28: Multicoupler

15. Detach safety chain (C) from support bracket (B).
16. Pull collar (D) back to release driveline (A) from support bracket. Remove the driveline from support bracket.

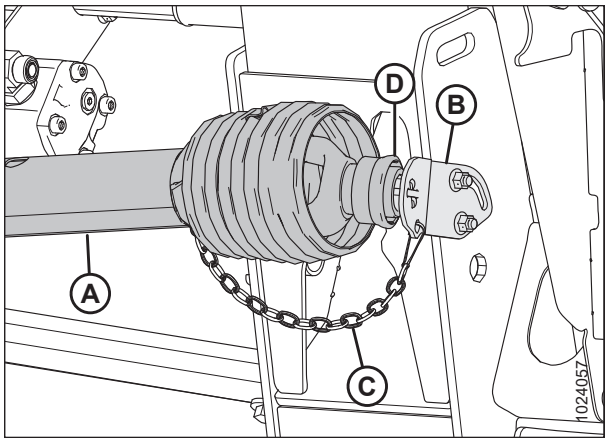

Figure 4.29: Driveline

17. Pull back collar (A) on the end of the driveline, and push the driveline onto combine output shaft (B) until the collar locks.

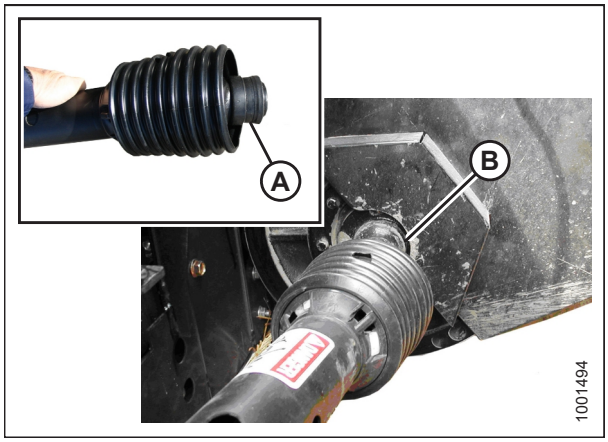

Figure 4.30: Driveline

4.3.2 Detaching Header from a Challenger, Gleaner, or Massey Ferguson Combine

DANGER

To avoid bodily injury or death from unexpected start-up or fall of raised machine, always stop engine, remove key, and engage safety props before going under header for any reason.

1. Choose a level area and position the header slightly above the ground.
2. Shut down the engine, and remove the key from the ignition.

   IMPORTANT:

   If slow speed transport wheels are installed, the header may be detached in either transport or field mode. If detaching with the wheels in field mode, set the wheels to the storage or uppermost working position, otherwise the header may tilt forward, making reattachment difficult. For instructions, refer to *Adjusting Stabilizer / Slow Speed Transport Wheels, page 90*.

   IMPORTANT:

   If stabilizer wheels are installed, set the wheels to the storage or uppermost working position, otherwise the header may tilt forward, making reattachment difficult. For instructions, refer to *Adjusting Stabilizer Wheels, page 88*.
3. Engage the float locks by pulling each float lock handle (A) away from the float module and setting it in locked position (B).

   NOTE:

   Illustration at right shows the right side of the header. Float lock on left side of header opposite.
4. Disconnect driveline (A) from combine output shaft (B).

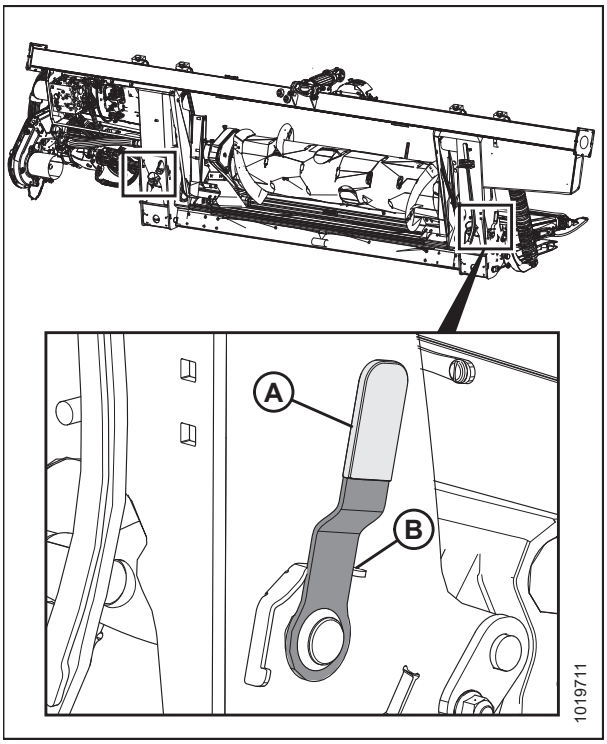

Figure 4.31: Float Lock Handle – Right Shown in Detail, Left Opposite

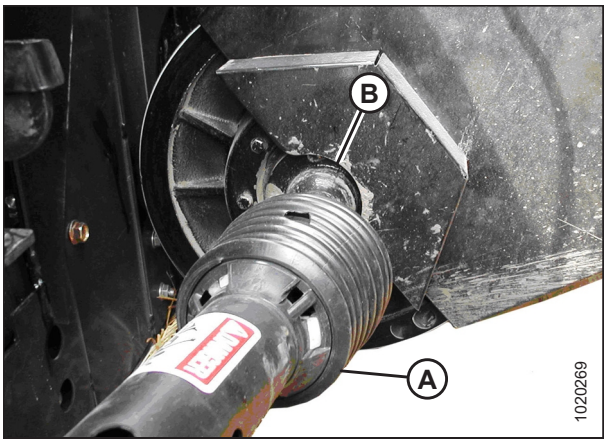

Figure 4.32: Driveline

5. Store driveline (A) on driveline support bracket (B) by pulling back collar (C) on the driveline and fitting it over support bracket body (D). Release the collar so it locks into place over the support bracket body.

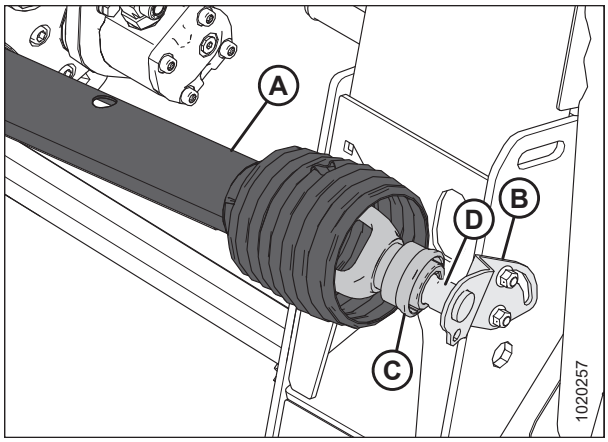

Figure 4.33: Driveline

6. Disconnect the harness at connector (A).
7. Move handle (B) on the combine multicoupler to the full open position to release multicoupler (C) from the combine.

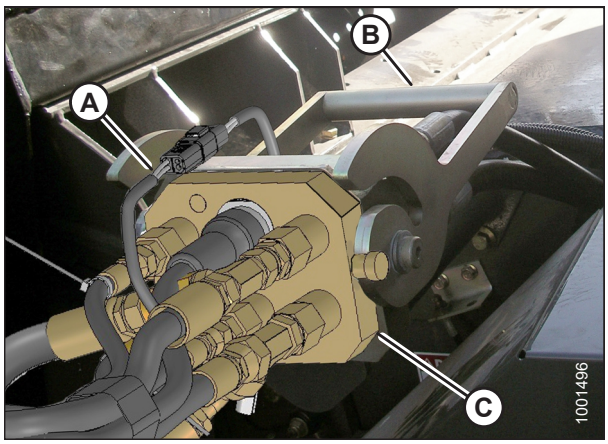

Figure 4.34: Multicoupler

8. Raise handle (A) on the float module, and place multicoupler (B) on the float module receptacle.
9. Lower handle (A) to lock multicoupler (B).

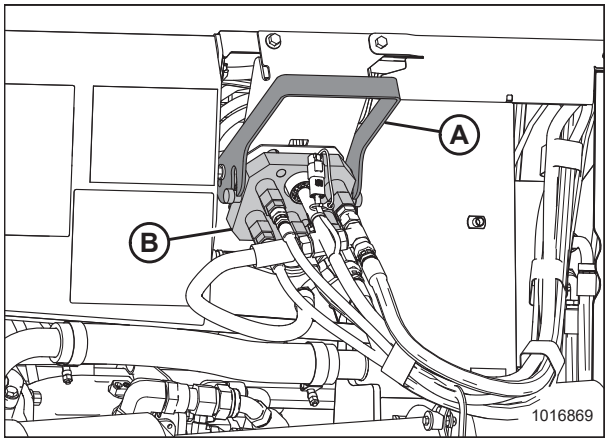

Figure 4.35: Float Module Multicoupler

10. Use lock handle (B) to retract lugs (A) at the base of the feeder house.

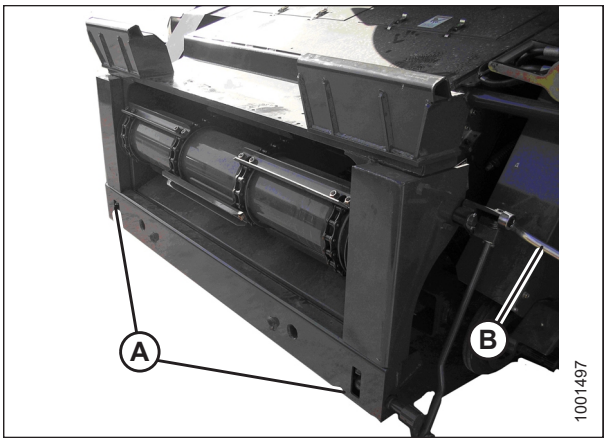

Figure 4.36: Challenger and Massey Ferguson

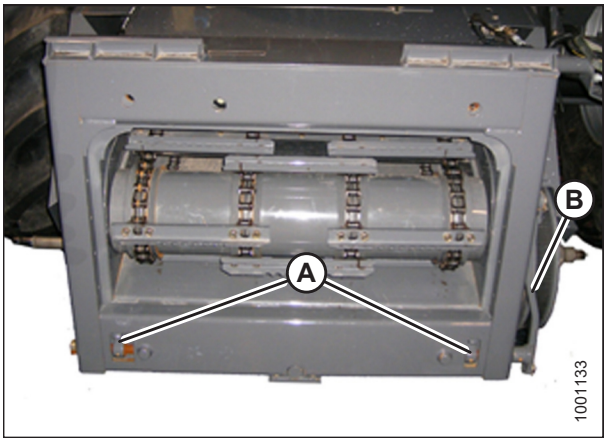

Figure 4.37: Gleaner R and S Series

11. Lower the feeder house until saddle (A) disengages and clears float module support (B).
12. Back the combine away slowly from the float module.

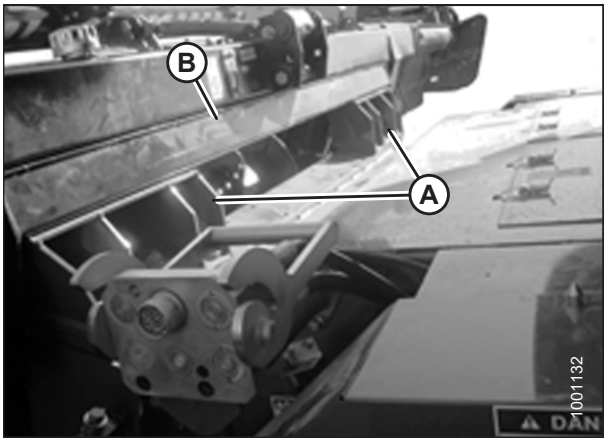

Figure 4.38: Float Module on Combine

4.4 AGCO IDEAL™ Series Combines

4.4.1 Attaching Header to an AGCO IDEAL™ Series Combine

WARNING

To avoid bodily injury or death from unexpected startup of machine, always stop the engine and remove the key from the ignition before leaving the operator's seat for any reason.

1. Pull lever (A) up to retract pins (B) at the bottom left and right sides of the feeder house.

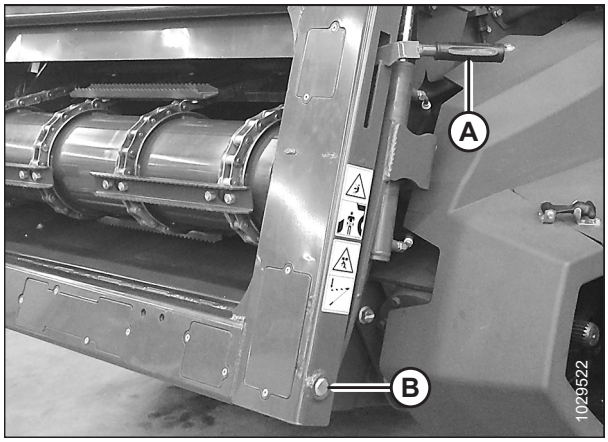

Figure 4.39: Feeder House

2. Drive the combine slowly up to the header until the feeder house is directly under top beam (A), and pins (B) are under hooks (C) on the transition frame.

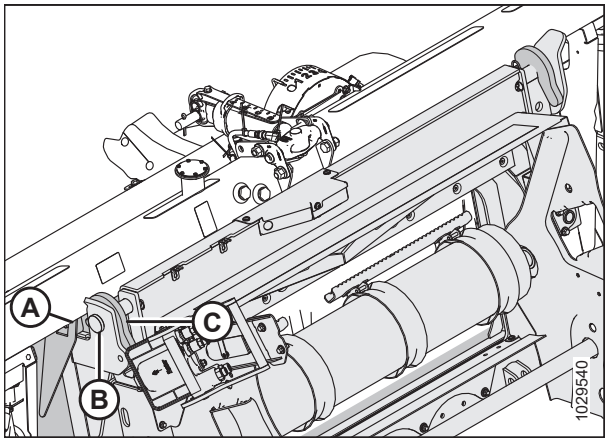

Figure 4.40: Feeder House

3. Raise feeder house until transition frame top beam (A) is fully resting on the feeder house. Raise the header slightly off the ground.

   IMPORTANT:

   The full weight of the header must be on the feeder house, **NOT** on pins (B).

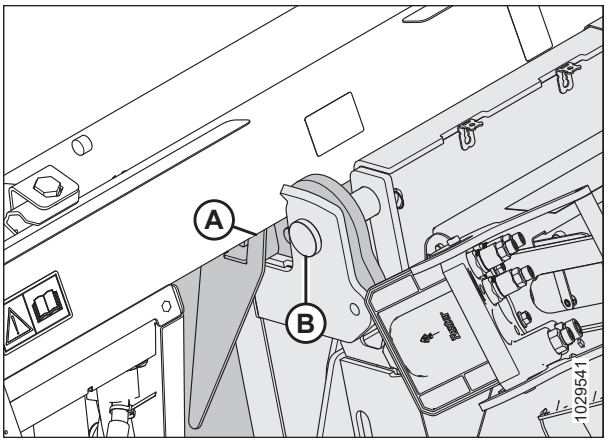

Figure 4.41: Top Beam Resting on Feeder House

4. Position bottom of feeder house so that locking pins (A) align with the holes in mount (C).
5. Push lever (B) down to extend locking pins (A) so they engage in mount (C).

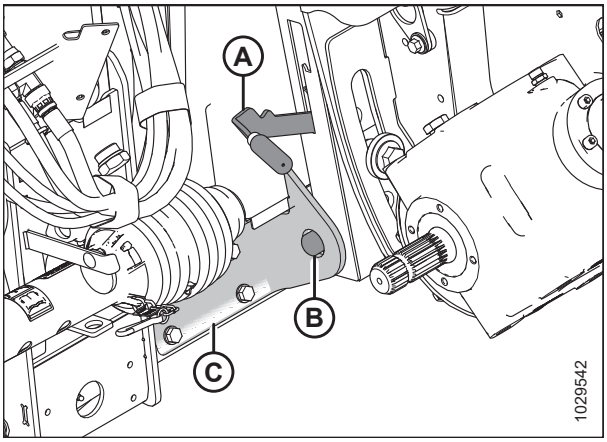

Figure 4.42: Feeder House Locking Pins

6. Rotate lock disc (A) upward and remove driveline (B) from the support.

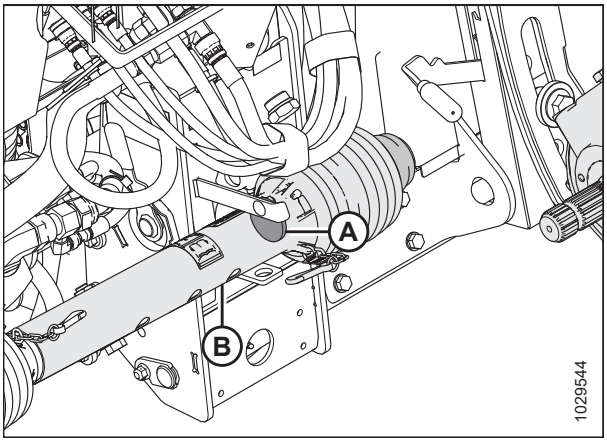

Figure 4.43: Driveline in Storage Position

7. Pull back collar (A) on end of driveline and push onto combine output shaft (B) until collar locks.

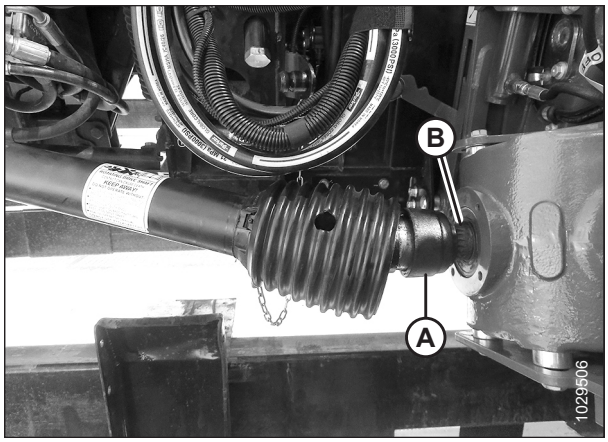

Figure 4.44: Connecting Driveline to Combine

8. Lower handle (A) to release multicoupler (B) from header.
9. Open cover (C) on the combine receptacle.
10. Push handle (D) to fully open position.
11. Clean mating surfaces of coupler and receptacle if necessary.

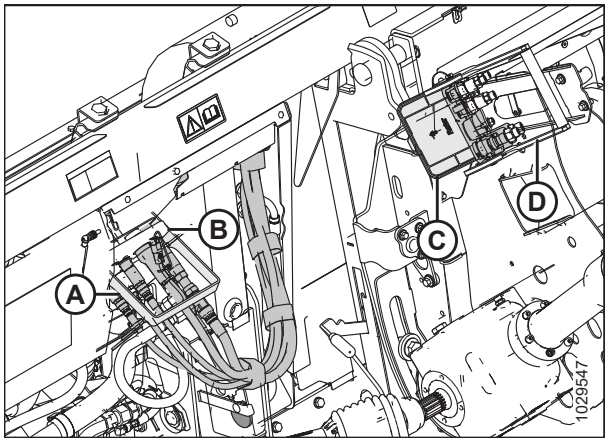

Figure 4.45: Multicoupler Receptacles

12. Position coupler (A) onto combine receptacle, and pull handle (B) to fully engage multicoupler into receptacle.

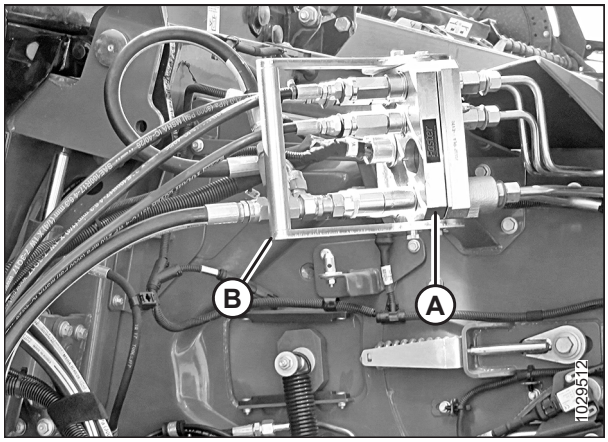

Figure 4.46: Multicoupler

4.4.2 Detaching Header from an AGCO IDEAL™ Series Combine

WARNING

To avoid bodily injury or death from unexpected startup of machine, always stop the engine and remove the key from the ignition before leaving the operator's seat for any reason.

1. Park the combine on a level surface.
2. Lower the header fully.
3. Shut down the engine, and remove the key from the ignition.
5. Push combine receptacle handle (B) to fully-open position to release multicoupler (A).

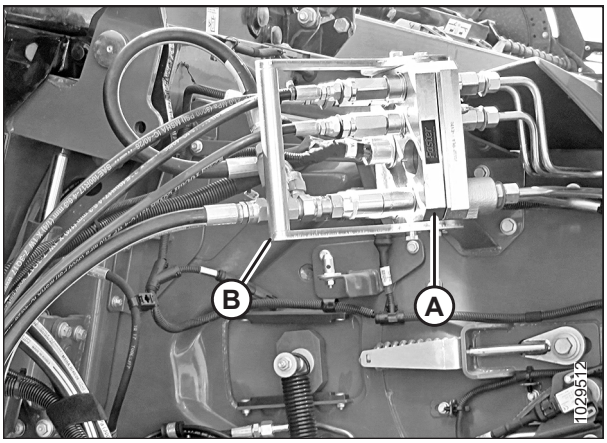

Figure 4.47: Combine Receptacle

6. Position multicoupler (B) onto header receptacle, and move handle (A) to a vertical position to lock the multicoupler.

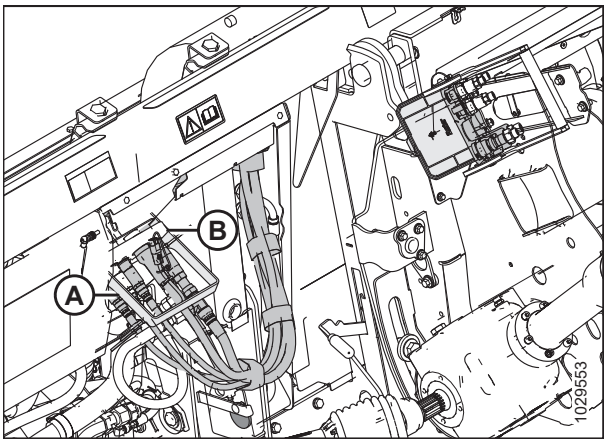

Figure 4.48: Locking Multicoupler

7. Pull back driveline collar (A) and remove the driveline from combine output shaft (B).

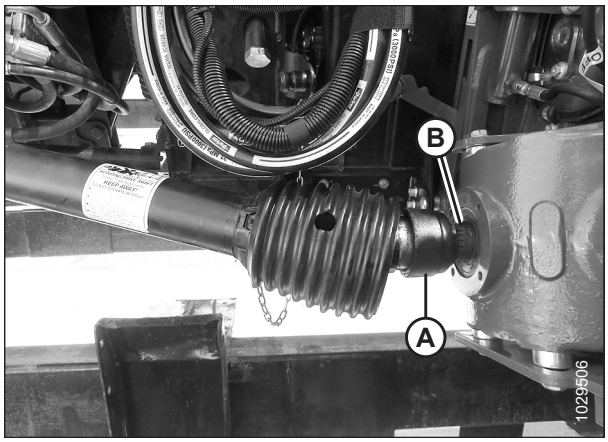

Figure 4.49: Detaching Driveline

8. Rotate lock disc (A) and slide driveline (B) onto the support.
9. Lower lock disc (A) to secure driveline (B) onto the support.

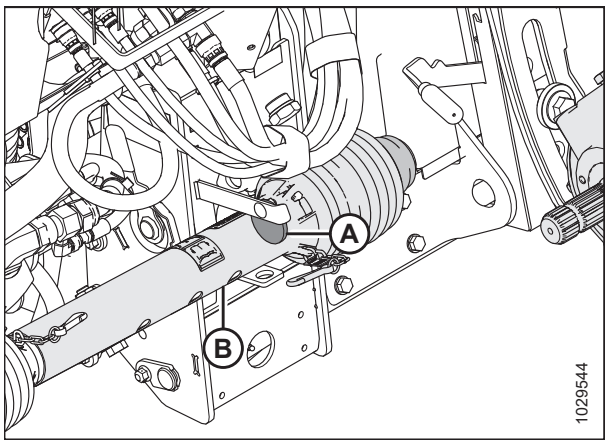

Figure 4.50: Driveline in Storage Position

10. Pull lever (A) up to retract pins (B) at the base of the feeder house.

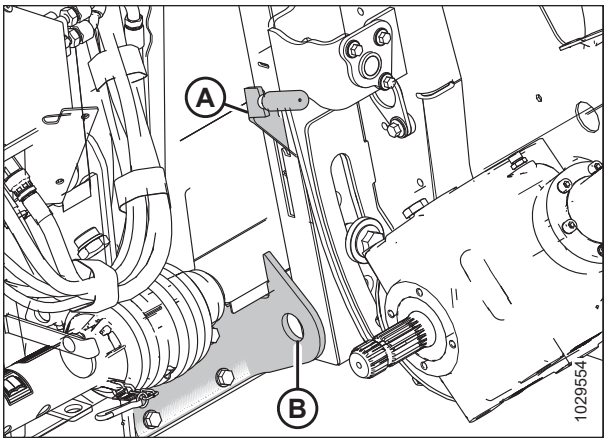

Figure 4.51: Feeder House Locking Pins

11. Start the combine and lower the header to the ground until feeder house pins (A) are clear of hooks (B).
12. Slowly back combine away from header.

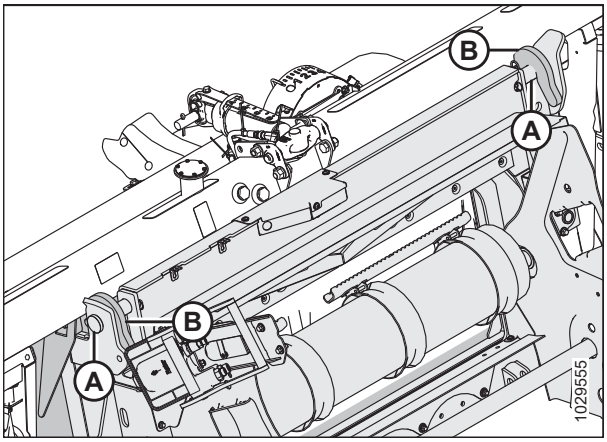

Figure 4.52: Lowering Feeder House

4.5 John Deere Combines

The D1 Series Draper Header is compatible with John Deere 60, 70, S, and T Series combines.

4.5.1 Attaching Header to John Deere Combine

WARNING

To avoid injury or death from unexpected start-up of machine, always stop the engine and remove the key from the ignition before leaving the operator's seat for any reason.

1. Shut down the engine, and remove the key from the ignition.
2. Push handle (A) on the combine multicoupler receptacle towards the feeder house to retract pins (B) at the bottom corners of the feeder house. Clean the receptacle.

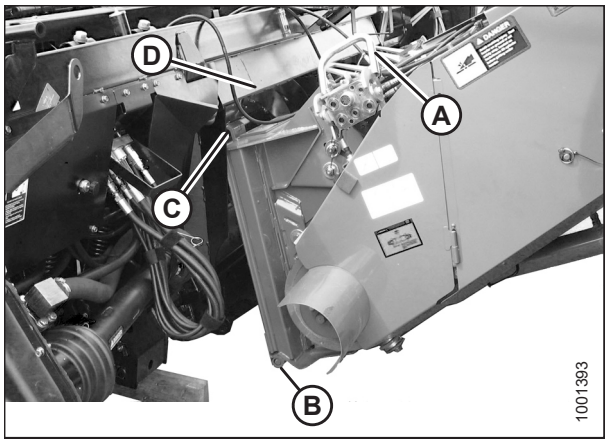

Figure 4.53: Combine and Float Module

WARNING

Never start or move the machine until you are sure all bystanders have cleared the area.

3. Start the engine and slowly drive the combine up to the header until feeder house saddle (C) is directly under float module top cross member (D).
4. Raise the feeder house slightly to lift the header ensuring the feeder house saddle is properly engaged in the float module frame.
5. Shut down the engine, and remove the key from the ignition.
6. Pull handle (A) on the float module to release multicoupler (B) from the storage position. Remove the multicoupler, and push the handle back into the float module to store.

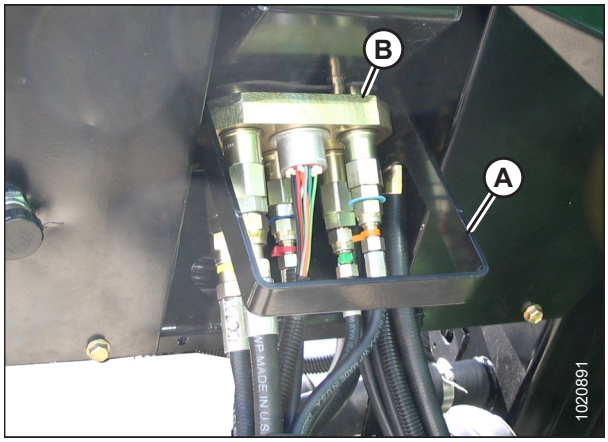

Figure 4.54: Multicoupler Storage

7. Position multicoupler (A) onto the receptacle, and pull handle (B) to engage the lugs on the multicoupler into the handle.
8. Pull handle (B) to a horizontal position and ensure multicoupler (A) is fully engaged into the receptacle.

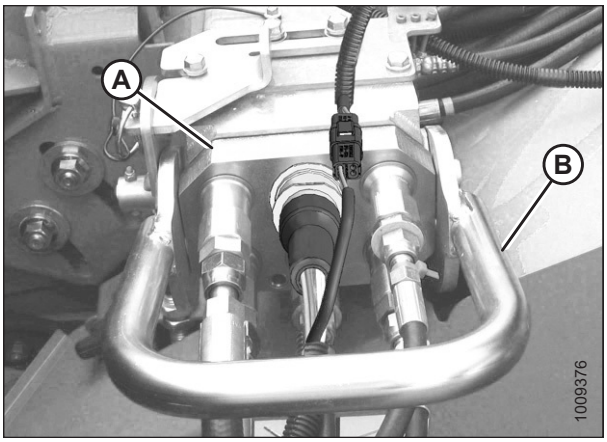

Figure 4.55: Multicoupler

9. Ensure that both feeder house pins (A) are fully engaged into the float module brackets.

   NOTE:

   If pins (A) do not fully engage the float module brackets, loosen bolts (B) and adjust the bracket as required.

10. Tighten bolts (B).

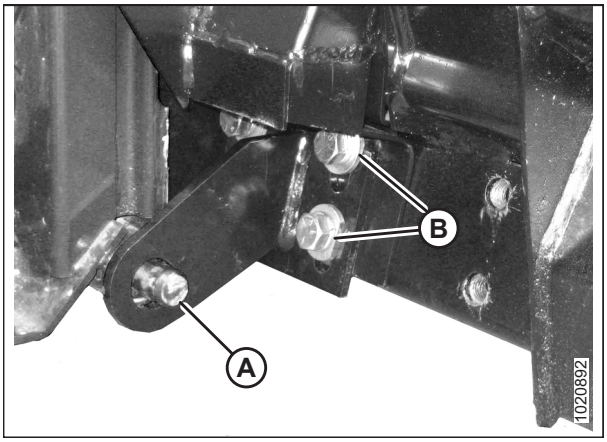

Figure 4.56: Feeder House Pin

11. Slide latch (A) to lock handle (B) in position and secure with lynch pin (C).
12. If the float module is equipped with the reel fore-aft/header tilt selector, connect harness (D) to combine connector (E).

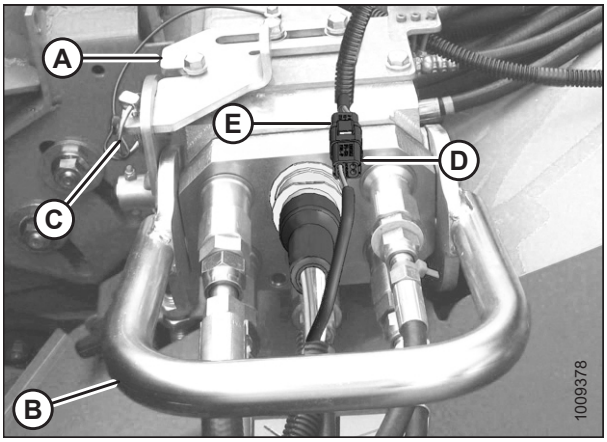

Figure 4.57: Multicoupler

13. Detach safety chain (C) from support bracket (B).
14. Pull collar (D) back to release driveline (A) from support bracket. Remove the driveline from the support bracket.

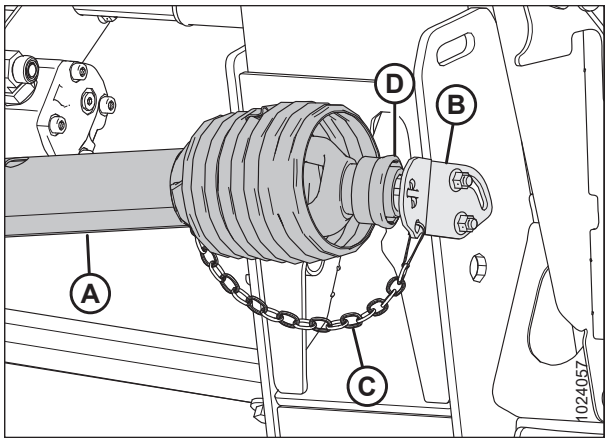

Figure 4.58: Driveline

15. Pull back collar (A) on the end of the driveline, and push the driveline onto combine output shaft (B) until the collar locks.

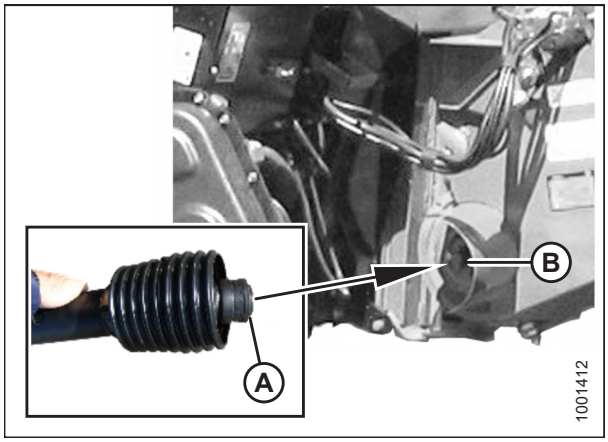

Figure 4.59: Driveline

16. Disengage the float locks by pulling each float lock handle (A) away from the float module, and setting it in unlocked position (B).

    NOTE:

    Illustration at right shows the right side of the header. Float lock on left side of header opposite.

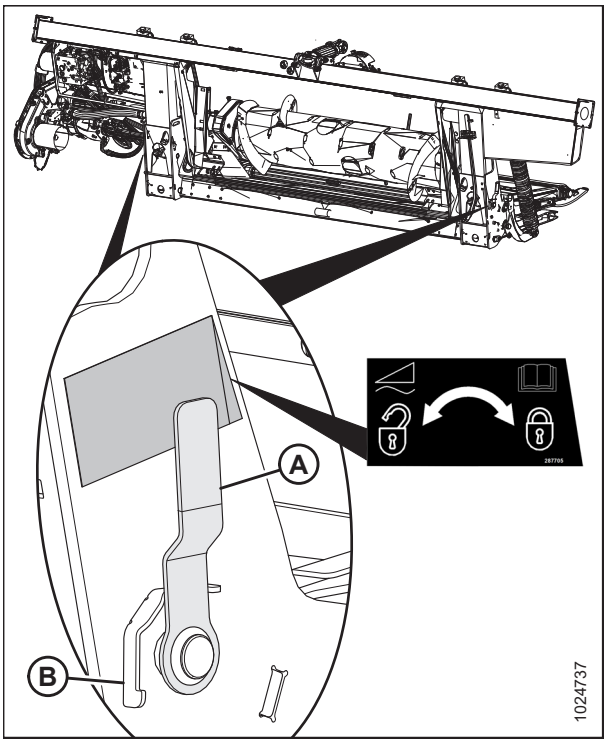

Figure 4.60: Float Lock Handle

4.5.2 Detaching Header from John Deere Combine

DANGER

To avoid bodily injury or death from unexpected start-up or fall of raised machine, always stop engine, remove key, and engage safety props before going under header for any reason.

1. Choose a level area and position the header slightly above the ground.
2. Shut down the engine, and remove the key from the ignition.

   IMPORTANT:

   If slow speed transport wheels are installed, the header may be detached in either transport or field mode. If detaching with the wheels in field mode, set the wheels to the storage or uppermost working position, otherwise the header may tilt forward, making reattachment difficult. For instructions, refer to *Adjusting Stabilizer / Slow Speed Transport Wheels, page 90*.

   IMPORTANT:

   If stabilizer wheels are installed, set the wheels to the storage or uppermost working position, otherwise the header may tilt forward, making reattachment difficult. For instructions, refer to *Adjusting Stabilizer Wheels, page 88*.
3. Engage the float locks by pulling each float lock handle (A) away from the float module and setting it in locked position (B).

   NOTE:

   Illustration at right shows the right side of the header. Float lock on left side of header opposite.
4. Open shield (A) on the combine, pull back the collar on driveline (B), and pull the driveline off the combine output shaft.

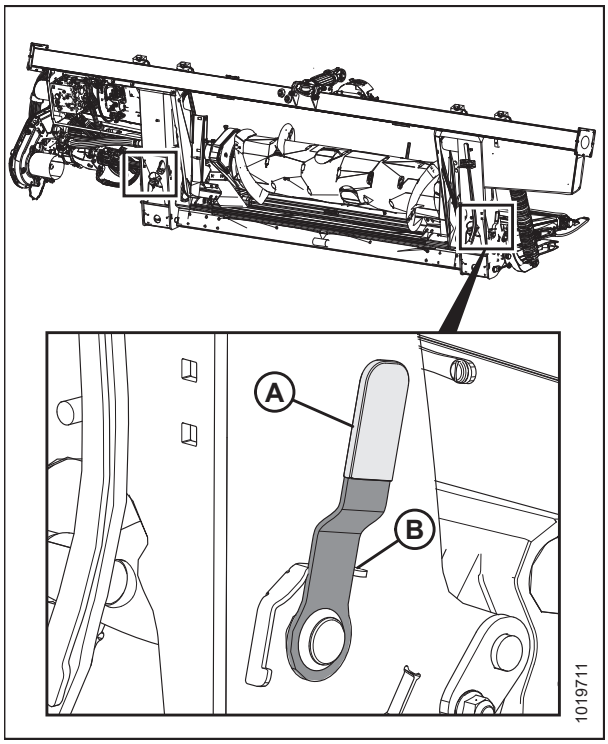

Figure 4.61: Float Lock Handle

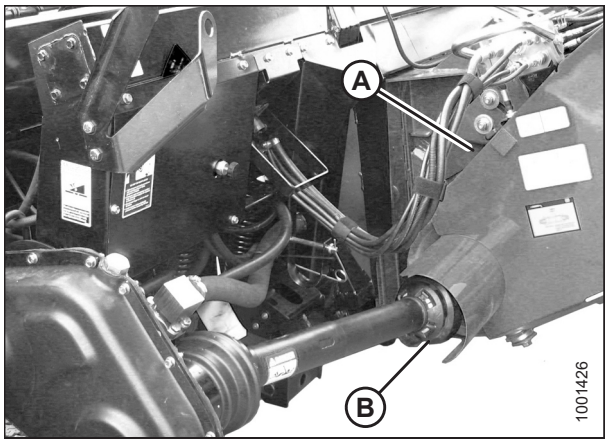

Figure 4.62: Driveline

5. Store driveline (A) on driveline support bracket (B) by pulling back collar (C) on the driveline and fitting it over support bracket body (D). Release the collar so it locks into place over the support bracket body.

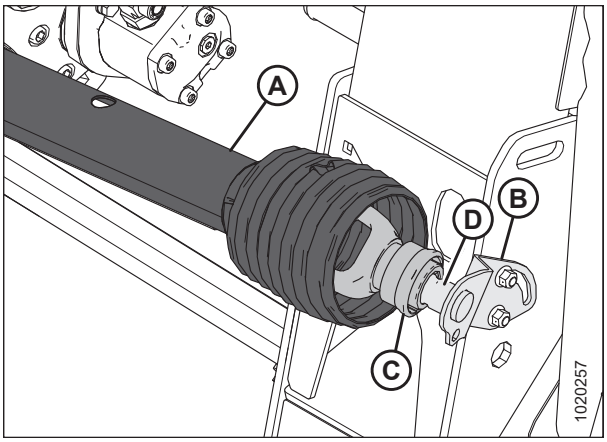

Figure 4.63: Driveline

6. Lift handle (A) on the float module.

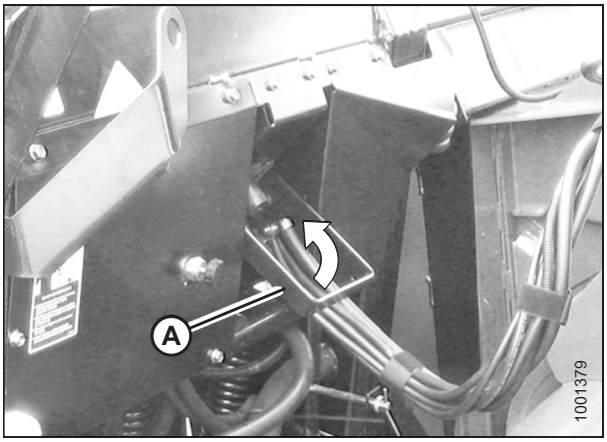

Figure 4.64: Multicoupler Storage

7. Disconnect harness (A) from the combine connector.
8. Remove lynch pin (B) and slide lock (C) to release handle (D).
9. Lift handle (D) to full vertical position to release multicoupler (E) from the combine.

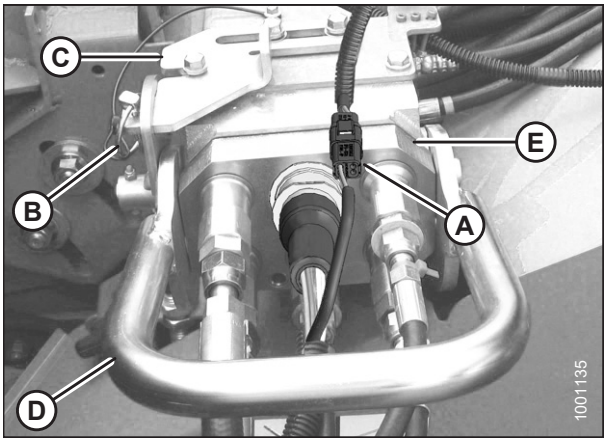

Figure 4.65: Multicoupler

10. Position multicoupler (A) on the float module receptacle and lower handle (B) to lock the multicoupler.

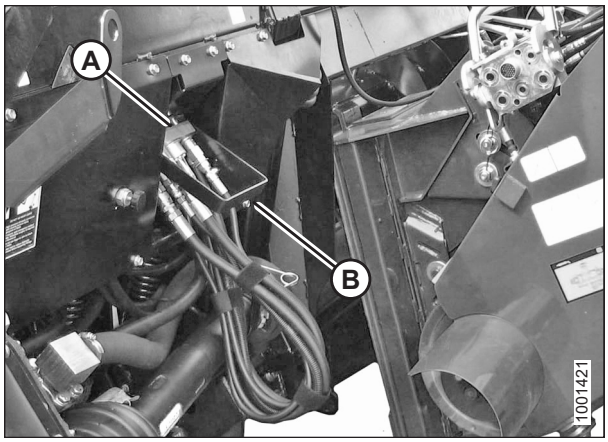

Figure 4.66: Multicoupler Storage

11. Push handle (A) on the combine towards the feeder house to disengage feeder house pin (B) from the float module.

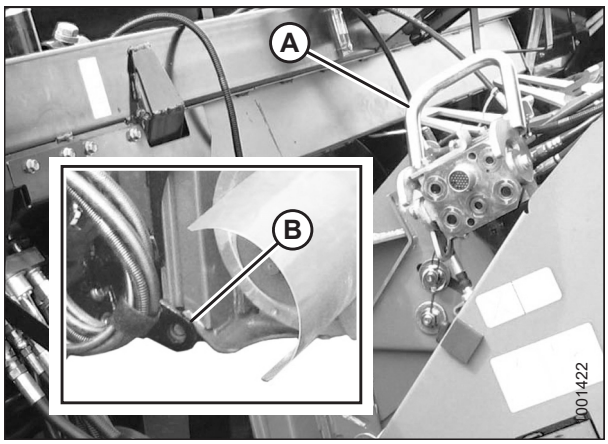

Figure 4.67: Feeder House Locks

12. Lower the feeder house until saddle (A) disengages and clears float module support (B).
13. Back the combine away slowly from the float module.

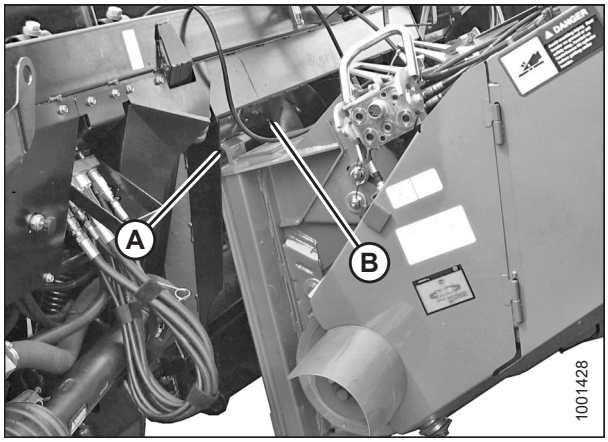

Figure 4.68: Float Module and Feeder House

4.6 CLAAS Combines

The D1 Series Draper Header is compatible with CLAAS 500, 600, and 700 Series combines.

4.6.1 Attaching Header to CLAAS Combine

WARNING

To avoid injury or death from unexpected start-up of machine, always stop the engine and remove the key from the ignition before leaving the operator's seat for any reason.

1. Shut down the engine, and remove the key from the ignition.
2. Move handle (A) on the float module into the raised position, and ensure pins (B) at the bottom corners of the float module are retracted.

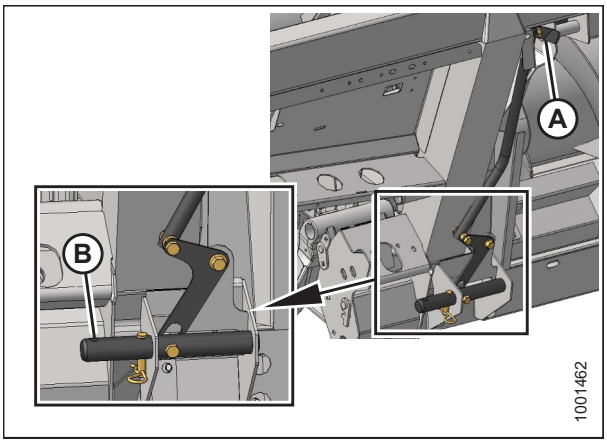

Figure 4.69: Pins Retracted

WARNING

Never start or move the machine until you are sure all bystanders have cleared the area.

3. Start the engine and slowly drive the combine up to the header until feeder house saddle (A) is directly under float module top cross member (B).
4. Raise the feeder house slightly to lift the header, ensuring the feeder saddle is properly engaged in the float module frame.
5. Shut down the engine, and remove the key from the ignition.

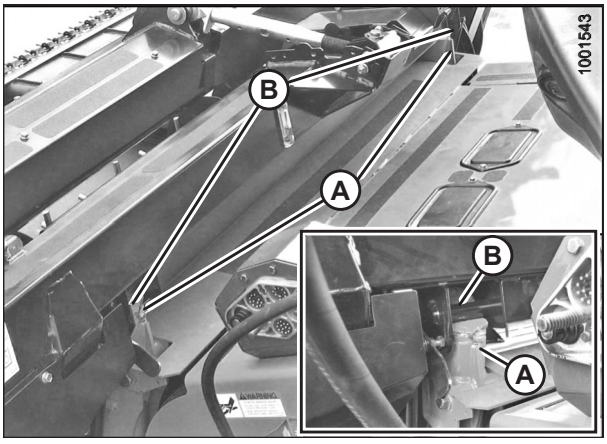

Figure 4.70: Header on Combine

6. Remove locking pin (B) from float module pin (A).

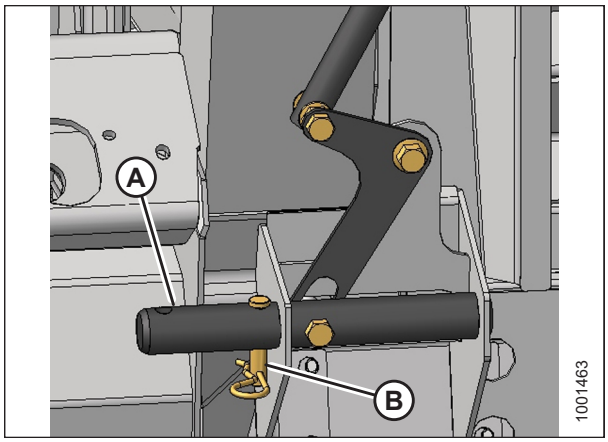

Figure 4.71: Locking Pins

7. Lower handle (A) to engage float module pins (B) into the feeder house. Reinsert locking pin (C) and secure with the hairpin.

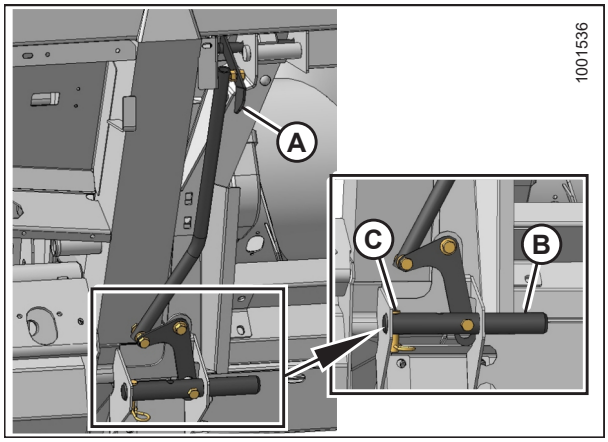

Figure 4.72: Engaging Pins

8. Unscrew knob (A) on combine coupler (B) to release the coupler from the receptacle.
9. Clean coupler (B) and receptacle.

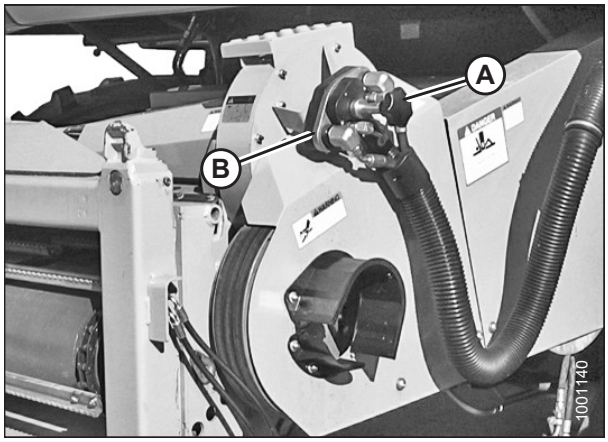

Figure 4.73: Combine Coupler

10. Place float module receptacle cover (A) onto the combine receptacle.

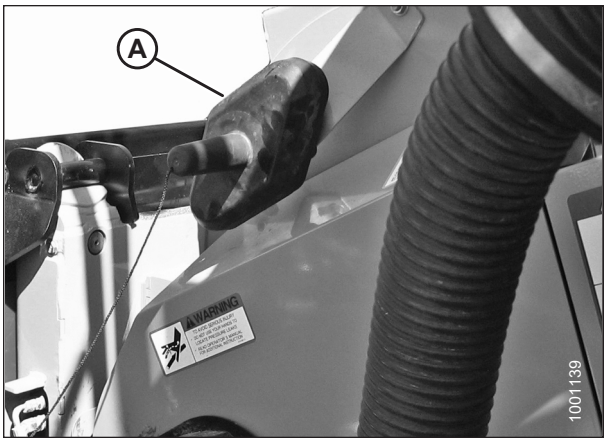

Figure 4.74: Receptacle Cover

11. Clean mating surface of coupler (A) and position onto float module receptacle (C).
12. Turn knob (B) to secure the coupler to the receptacle.

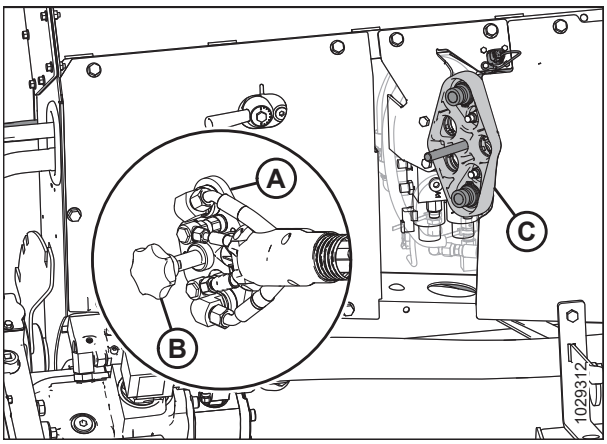

Figure 4.75: Coupler

13. Detach safety chain (C) from support bracket (B).
14. Pull collar (D) back to release driveline (A) from support bracket. Remove the driveline from the support bracket.

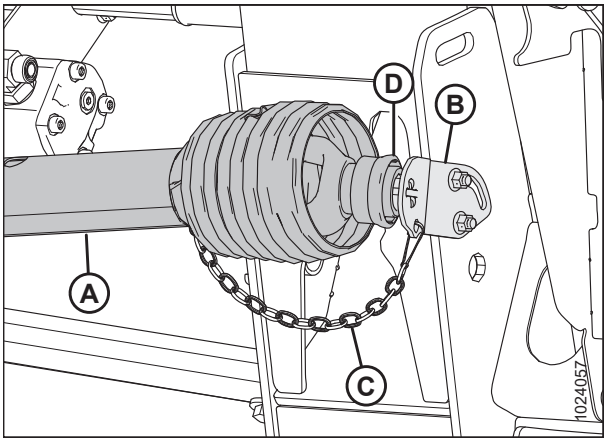

Figure 4.76: Driveline

15. Attach driveline (A) to the combine output shaft.

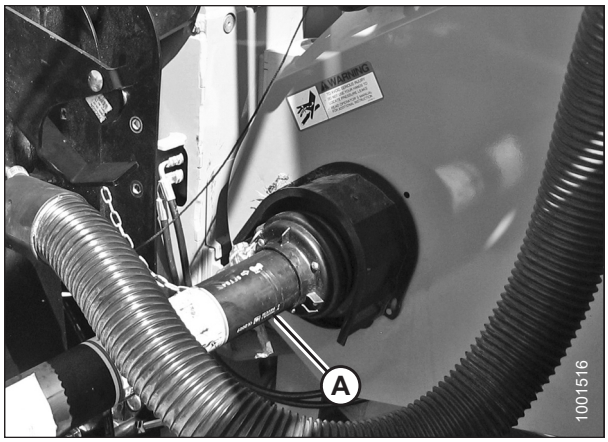

Figure 4.77: Driveline and Output Shaft

16. Disengage both header float locks by pulling each float lock handle (A) away from the float module and setting it in unlocked position (B).

    NOTE:

    Illustration at right shows the right side of the header. Float lock on left side of header opposite.

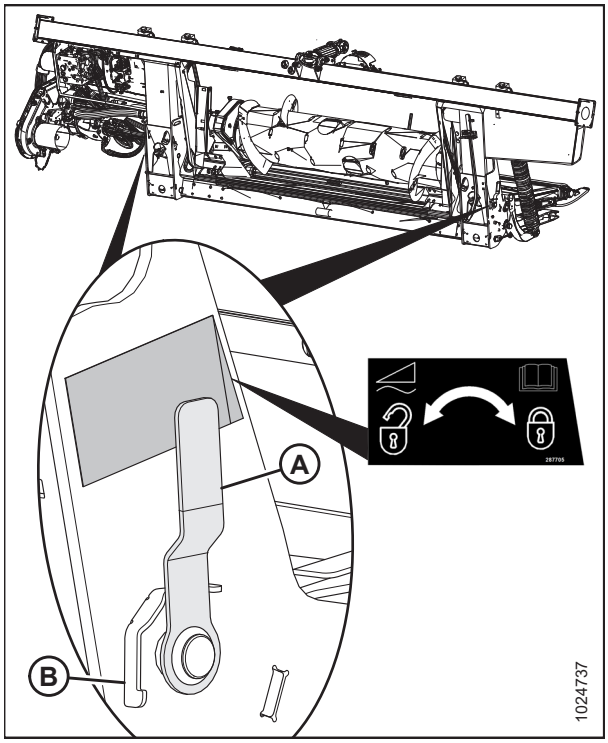

Figure 4.78: Float Lock Handle

4.6.2 Detaching Header from CLAAS Combine

DANGER

To avoid bodily injury or death from unexpected start-up or fall of raised machine, always stop engine, remove key, and engage safety props before going under header for any reason.

1. Choose a level area and position the header slightly above the ground.
2. Shut down the engine, and remove the key from the ignition.

   IMPORTANT:

   If slow speed transport wheels are installed, the header may be detached in either transport or field mode. If detaching with the wheels in field mode, set the wheels to the storage or uppermost working position, otherwise the header may tilt forward, making reattachment difficult. For instructions, refer to *Adjusting Stabilizer / Slow Speed Transport Wheels, page 90*.

   IMPORTANT:

   If stabilizer wheels are installed, set the wheels to the storage or uppermost working position, otherwise the header may tilt forward, making reattachment difficult. For instructions, refer to *Adjusting Stabilizer Wheels, page 88*.
3. Engage the float locks by pulling each float lock handle (A) away from the float module and setting it in locked position (B).

   NOTE:

   Illustration at right shows the right side of the header. Float lock on left side of header opposite.
4. Disconnect driveline (A) from the combine.

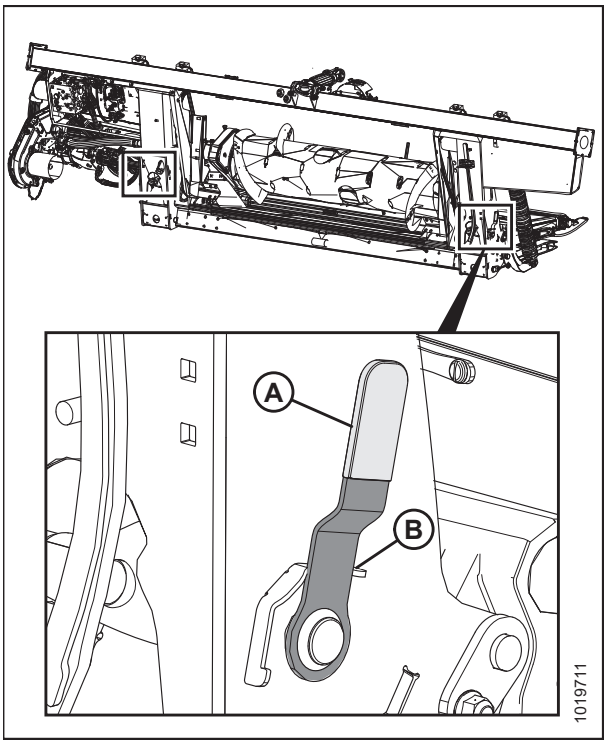

Figure 4.79: Float Lock Handle



Figure 4.80: Driveline

5. Store driveline (A) on driveline support bracket (B) by pulling back collar (C) on the driveline and fitting it over support bracket body (D). Release the collar so it locks into place over the support bracket body.

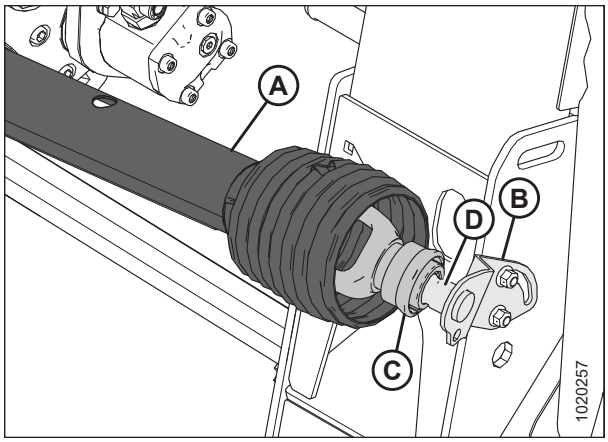

Figure 4.81: Driveline

6. Remove cover (A) from the combine receptacle.

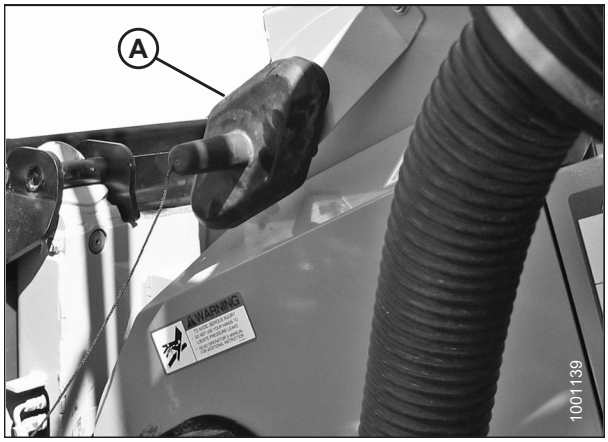

Figure 4.82: Cover

7. Position coupler (A) onto the combine receptacle, and turn knob (B) to secure the coupler to the receptacle.

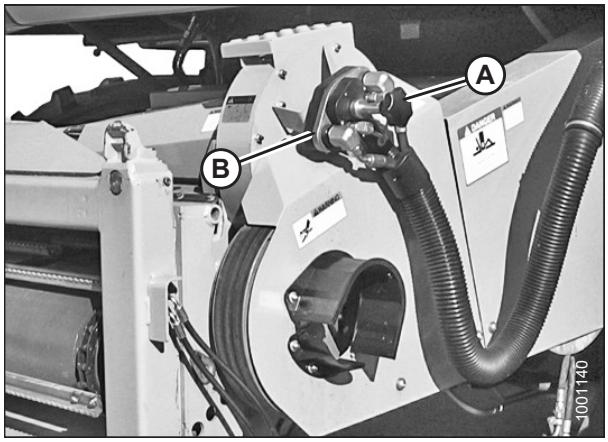

Figure 4.83: Combine Coupler

8. Place cover (A) on the float module receptacle.

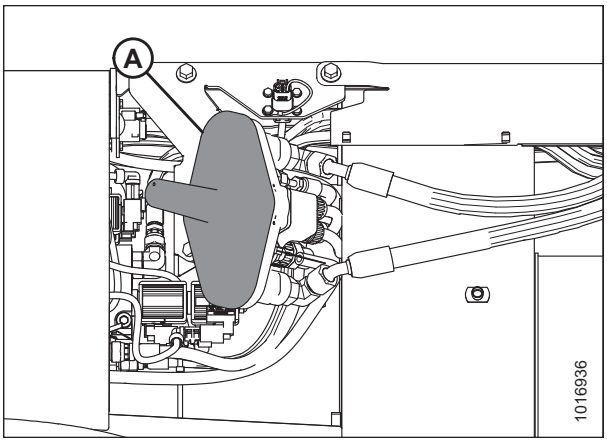

Figure 4.84: Float Module

9. Remove locking pin (A) from float module pin (B).
10. Raise handle (C) to disengage float module pins (B) from the feeder house.
11. Replace locking pin (A) in the float module pin, and secure with the hairpin.

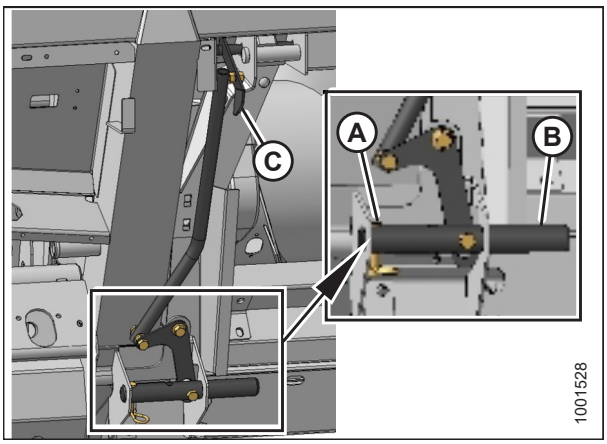

Figure 4.85: Feeder House Locks

12. Lower the feeder house until feeder house posts (A) disengage float module (B).
13. Back the combine away slowly from the float module.

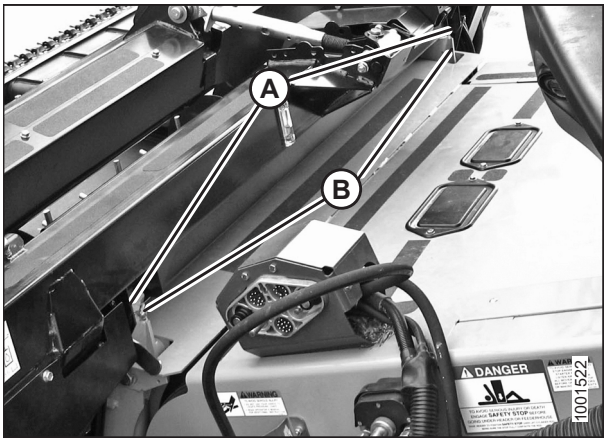

Figure 4.86: Header on Combine

4.7 New Holland Combines

The D1 Series Draper Header is compatible with the following New Holland combines:

Table 4.2 Header and Combine Compatibility

Series	Combine Model
CR	920, 940, 960, 970, 980
	9020, 9040, 9060, 9065, 9070, 9080
	6090, 7090, 8080, 8090, 9090
	6.80, 6.90, 7.90, 8.90, 9.90, 10.90
CX	840, 860, 870, 880
	8070, 8080, 8090
	8080 Elevation, 8090 Elevation

4.7.1 Attaching Header to New Holland CR/CX Combine

WARNING

To avoid injury or death from unexpected start-up of machine, always stop the engine and remove the key from the ignition before leaving the operator's seat for any reason.

1. Ensure handle (A) is positioned so locks (B) can engage the float module.

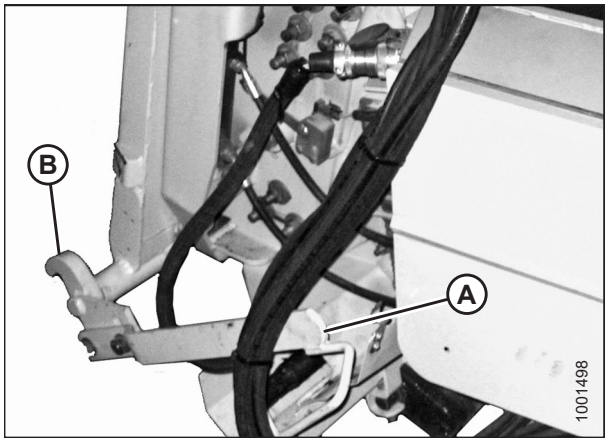

Figure 4.87: Feeder House Locks

WARNING

Never start or move the machine until you are sure all bystanders have cleared the area.

2. Start the engine and slowly drive the combine up to the float module until feeder house saddle (A) is directly under float module top cross member (B).
3. Raise the feeder house slightly to lift the header, ensuring the feeder saddle is properly engaged in the float module frame.
4. Shut down the engine, and remove the key from the ignition.

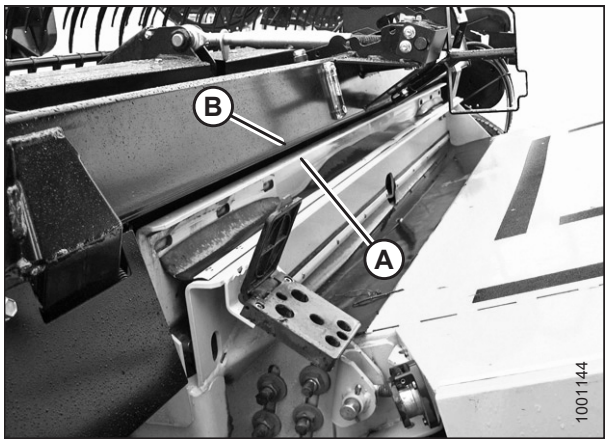

Figure 4.88: Header on Combine

5. Lift lever (A) on the float module on the left side of the feeder house, and push handle (B) on the combine to engage locks (C) on both sides of the feeder house.
6. Push down on lever (A) so the slot in the lever engages the handle and locks the handle in place.
7. If the lock does not fully engage pin (D) on the float module when lever (A) and handle (B) are engaged, loosen bolts (E) and adjust lock (C). Retighten bolts.

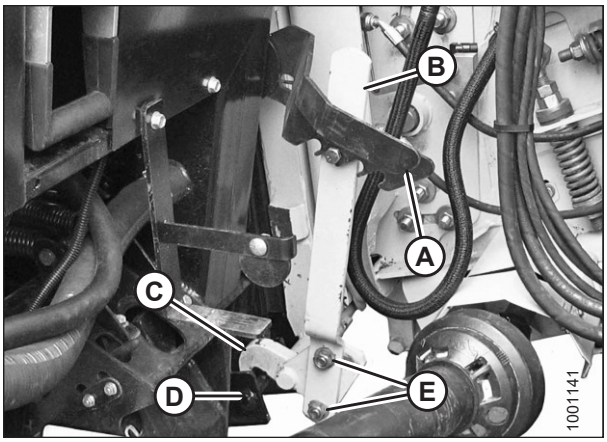

Figure 4.89: Feeder House Locks

8. Open the cover on receptacle (A) located on the left side of the float module.
9. Push in lock button (B) and pull handle (C) to the fully open position.
10. Clean the receptacle mating surfaces.

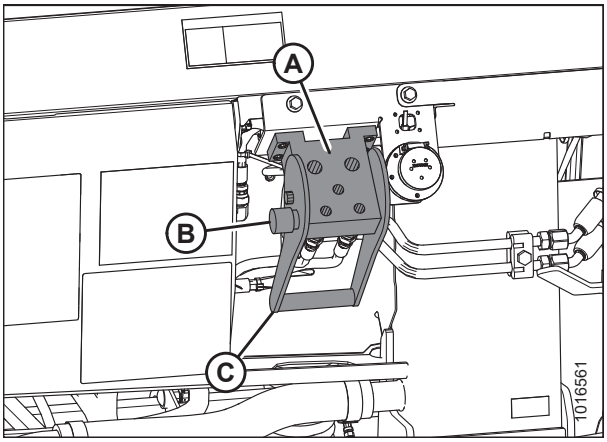

Figure 4.90: Float Module Receptacle

11. Remove hydraulic quick coupler (A) from the storage plate on the combine, and clean the mating surface of the coupler.

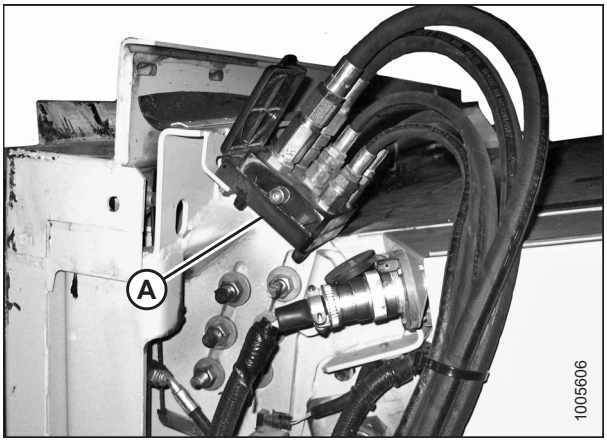

Figure 4.91: Combine Coupler

12. Position coupler (A) onto the float module receptacle, and push handle (B) to engage the pins into the receptacle.
13. Push handle (B) to closed position until lock button (C) snaps out.
14. Remove the cover on the float module electrical receptacle.
15. Remove connector (D) from the combine.
16. Align lugs on connector (D) with the slots in the float module receptacle, and push the connector onto the receptacle. Turn the collar on the connector to lock it in place.

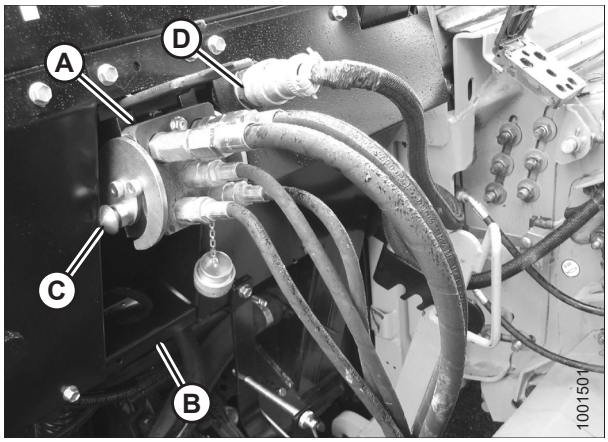

Figure 4.92: Connections

17. Detach safety chain (C) from support bracket (B).
18. Pull collar (D) back to release driveline (A) from support bracket. Remove the driveline from support bracket.

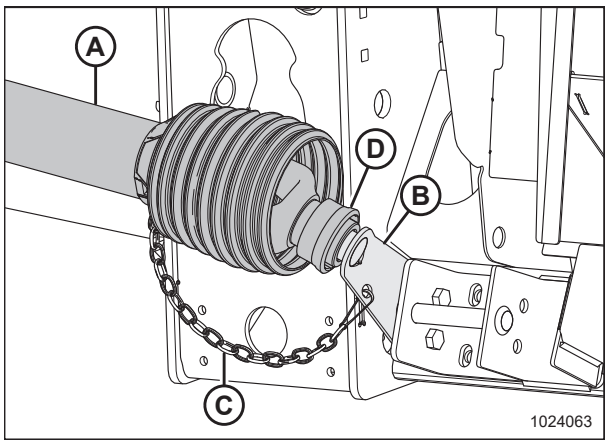

Figure 4.93: Driveline in Storage Position

19. Pull back the collar on the end of the driveline, and push the driveline onto combine output shaft (A) until the collar locks.

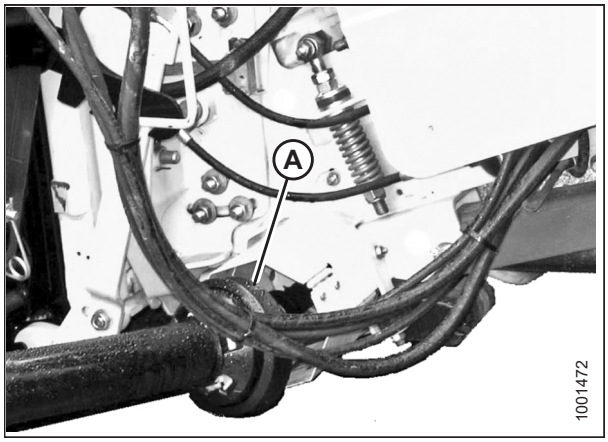

Figure 4.94: Driveline and Output Shaft

20. Disengage the float locks by pulling each float lock handle (A) away from the float module and setting it in unlocked position (B).

    NOTE:

    Illustration at right shows the right side of the header. Float lock on left side of header opposite.

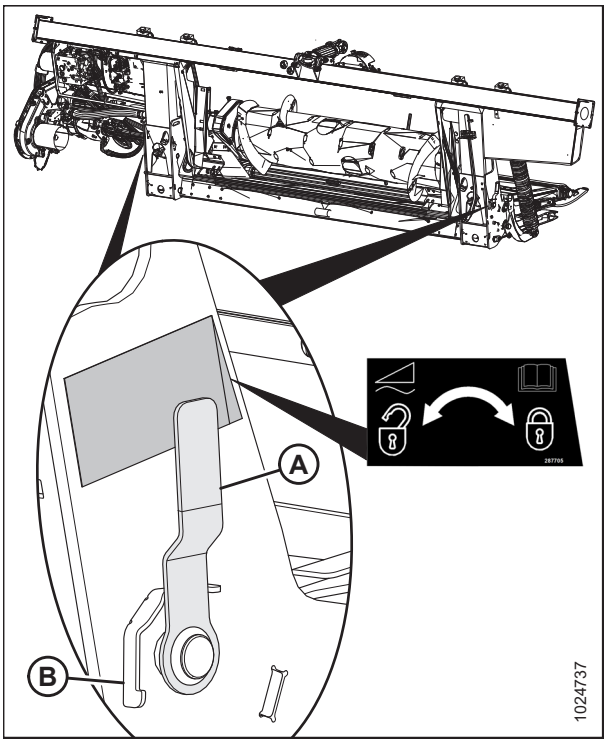

Figure 4.95: Float Lock Handle

4.7.2 Detaching Header from New Holland CR/CX Combine

DANGER

To avoid bodily injury or death from unexpected start-up or fall of raised machine, always stop engine, remove key, and engage safety props before going under header for any reason.

1. Choose a level area and position the header slightly above the ground.
2. Stop the engine and remove the key from the ignition.

   IMPORTANT:

   If slow speed transport wheels are installed, the header may be detached in either transport or field mode. If detaching with the wheels in field mode, set the wheels to the storage or uppermost working position, otherwise the header may tilt forward, making reattachment difficult. For instructions, refer to *Adjusting Stabilizer / Slow Speed Transport Wheels, page 90*.

   IMPORTANT:

   If stabilizer wheels are installed, set the wheels to the storage or uppermost working position, otherwise the header may tilt forward, making reattachment difficult. For instructions, refer to *Adjusting Stabilizer Wheels, page 88*.
3. Engage the float locks by pulling each float lock handle (A) away from the float module and setting it in the locked position (B).

   NOTE:

   Illustration at right shows the right side of the header. Float lock on left side of header opposite.
4. Disconnect driveline (A) from the combine.

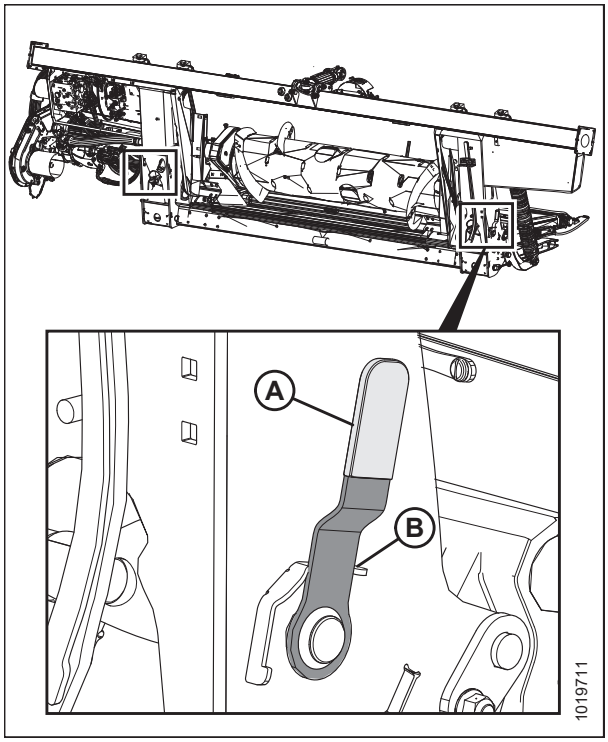

Figure 4.96: Float Lock Handle

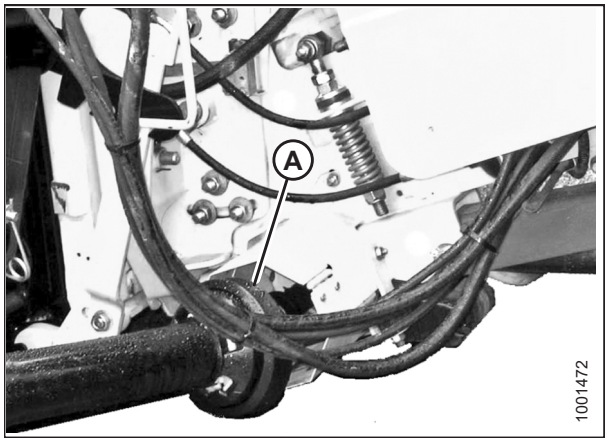

Figure 4.97: Driveline

5. Store driveline (A) on driveline support bracket (B) by pulling back collar (C) on the driveline and fitting it over support bracket weldment (D). Release the collar so it locks into place over the weldment.
6. Attach safety chain (E) to support bracket (B).

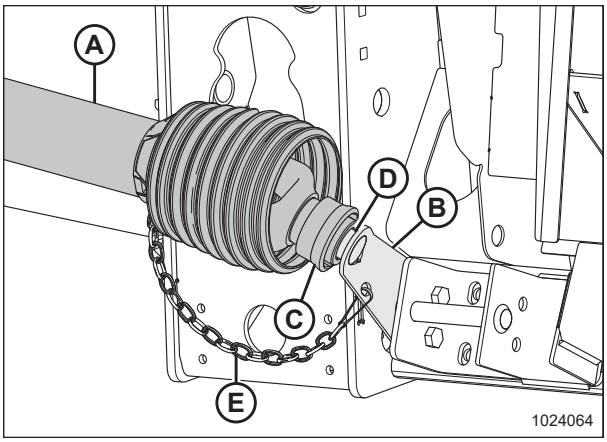

Figure 4.98: Driveline

7. Push in lock button (B), and pull handle (C) to release multicoupler (A).

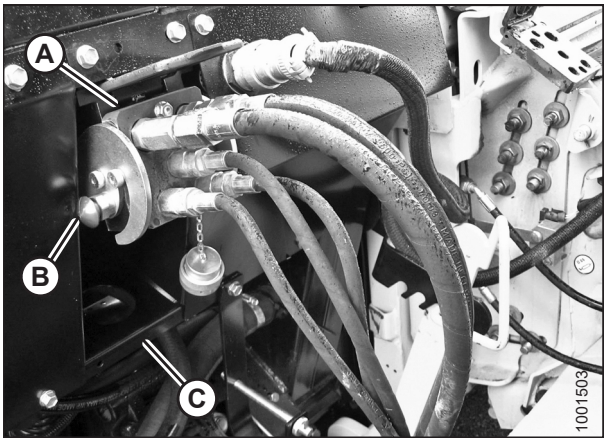

Figure 4.99: Float Module Connections

8. Push handle (A) to the closed position until lock button (B) snaps out. Close the cover.

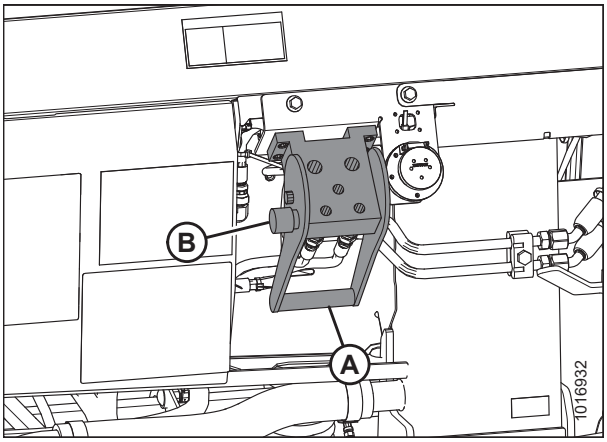

Figure 4.100: Float Module Receptacles

9. Position hydraulic quick coupler (A) onto storage plate (B) on the combine.

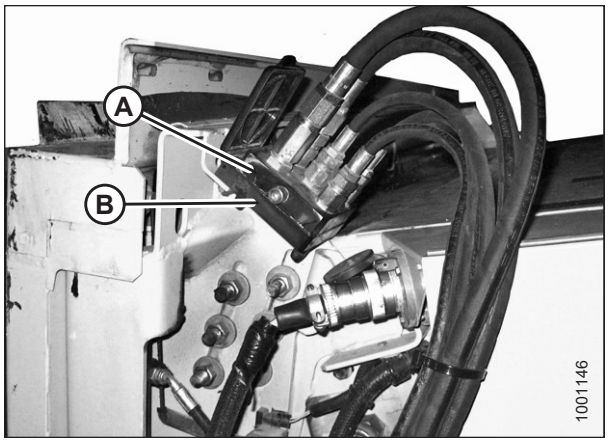

Figure 4.101: Combine Coupler

10. Remove electrical connector (A) from the float module.

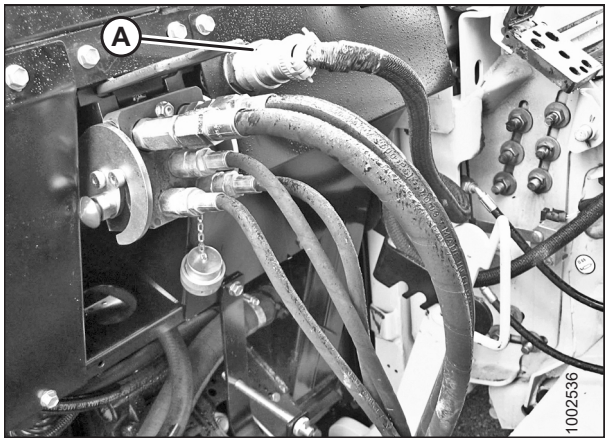

Figure 4.102: Float Module Connections

11. Connect the electrical connector to the combine at location (A).

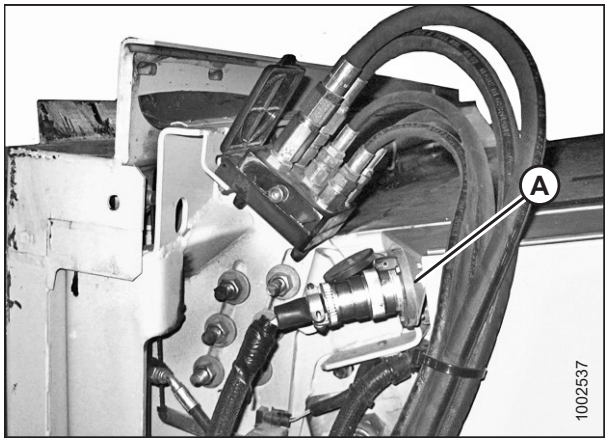

Figure 4.103: Combine Couplers

12. Replace cover (A) on the float module receptacle.

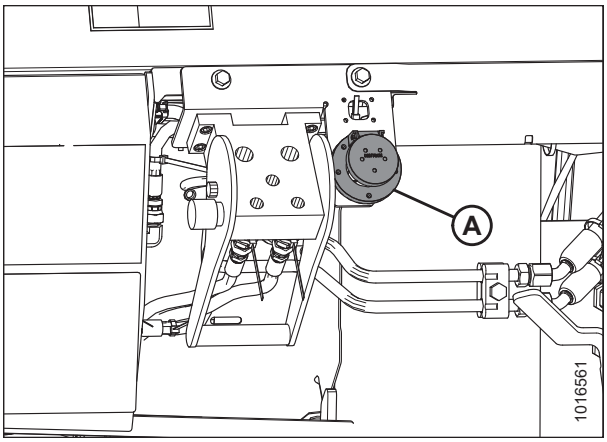

Figure 4.104: Float Module Receptacles

13. Lift lever (A) and pull and lower handle (B) to disengage feeder house/float module lock (C).

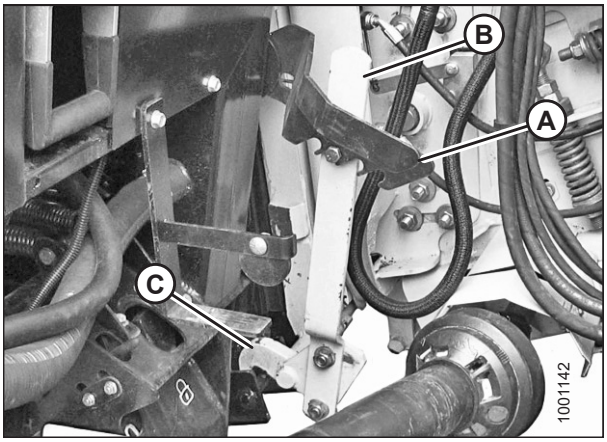

Figure 4.105: Feeder House Locks

14. Lower feeder house (A) until the feeder house disengages float module support (B).
15. Back the combine slowly away from the header.

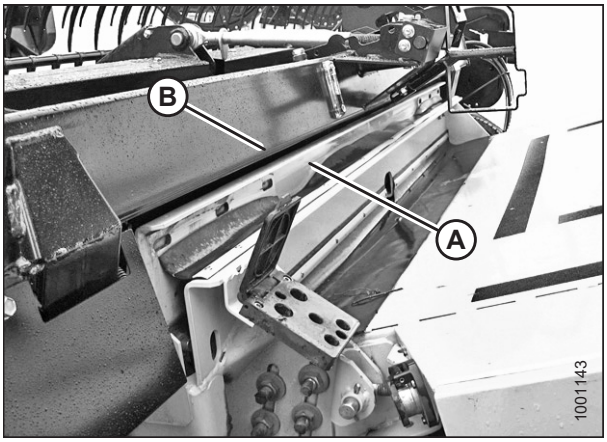

Figure 4.106: Header on Combine

4.7.3 CR Feeder Deflectors

This section is for New Holland CR combines only. If operating a New Holland CX combine, remove feed deflectors.

For New Holland CR combines only: Short feeder deflectors have been factory-installed on the float module to improve feeding into the feeder house. Remove the feeder deflectors if necessary. For instructions, refer to *5.11.3 Replacing Feed Deflectors on New Holland CR Combines, page 549*.

Long feeder kits are provided for narrow feeder house combines and can be installed to replace the short feeder deflectors.

Table 4.3 FM100 Feeder Kits for CR Model Combines

Feeder House Size	Feeder Kit Size	MacDon Part Number
1250–1350 mm (49–65 in.)	Short: 200 mm (7 7/8 in.)	MD #213613, 213614
1100 mm (43-1/2 in.) and below	Long: 325 mm (12 13/16 in.)	MD #213592, 213593

4.8 Attaching and Detaching Header to and from FM100 Float Module

Attaching/detaching procedures are the same for all makes and models of combines. Headers can be attached to the float module from either field or transport configurations.

The procedures in this manual require that the float module remains attached to the combine. Attach/detach the float module only if performing the following tasks:

- Detaching the header for use on a windrower
- Changing headers
- Performing certain maintenance tasks

4.8.1 Attaching Header to FM100 Float Module

D1 Series headers can be attached to the float module from either field or transport configuration.

WARNING

To avoid injury or death from unexpected start-up of machine, always stop the engine and remove the key from the ignition before leaving the operator's seat for any reason.

NOTE:

Stabilizer/slow speed transport wheels can be used to support the header. For instructions, refer to *Adjusting Stabilizer / Slow Speed Transport Wheels, page 90*.

1. Prop up hydraulic center-link (A) with a pin (or equivalent tool) at location (B) as shown.

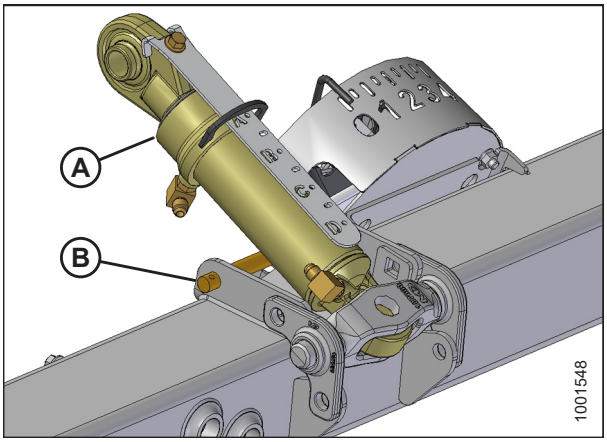

Figure 4.107: Center-Link

2. Remove ring (A) from pin (B), and remove the pins from the header legs at the delivery opening.

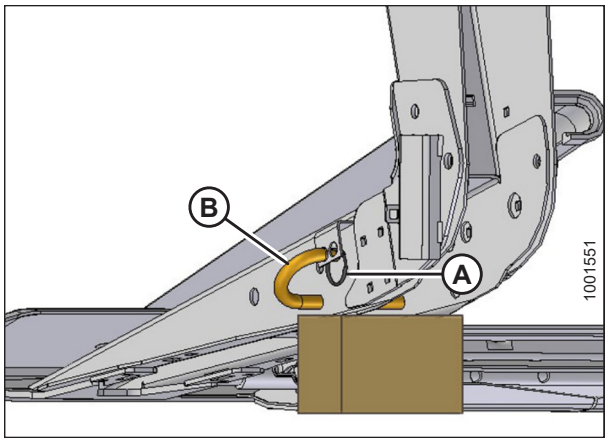

Figure 4.108: D1 Series Combine Header with Block under Leg

3. Ensure latches (A) at the front corners of the float module are rotated towards the rear of the float module.

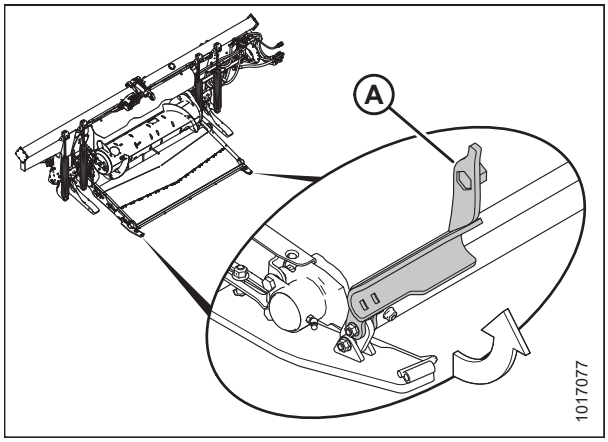

Figure 4.109: Latch

CAUTION

Be sure all bystanders are clear of machine before starting engine or engaging any header drives.

4. Start the engine, and lower the combine feeder house so float module arms (A) are aligned with header legs (B).
5. Drive slowly forward while maintaining alignment between float module arms (A) and header legs (B).
6. Keep float module arms (A) just under header legs (B) to ensure the float module legs seat properly in the header linkage supports at location (C).

   IMPORTANT:

   Keep the hydraulic hoses clear to prevent damaging them while driving into the header.
7. Drive slowly forward until float module arms (A) contact the stops in legs (C).

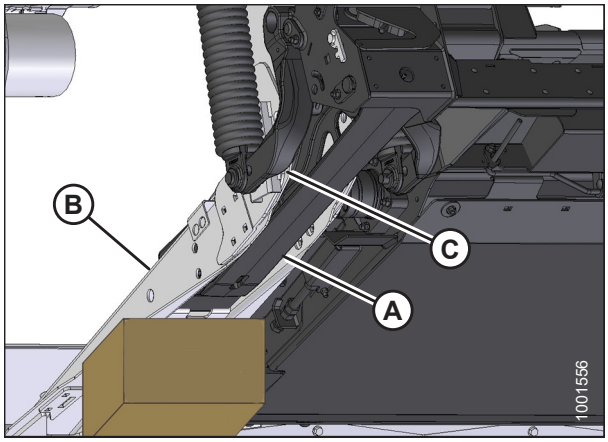

Figure 4.110: Float Module Underside

8. Adjust the length of center-link (A) using the header angle hydraulics to approximately align center-link eye (B) with the hole in the header bracket.
9. Shut down the engine, and remove the key from the ignition.

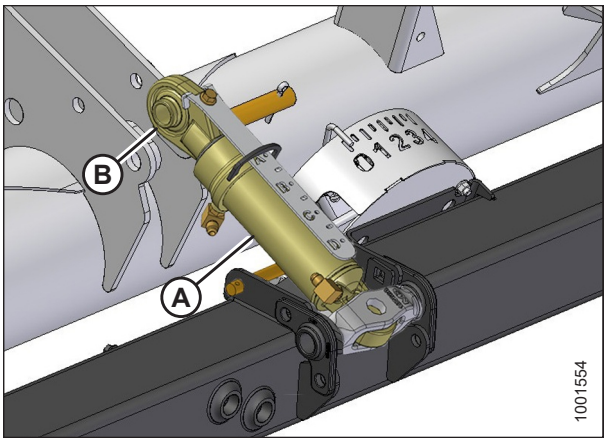

Figure 4.111: Center-Link

10. Connect the center-link as follows:
    a. Pull pin (B) partially out of bracket (C), and remove the prop from under center-link (A).
    b. Install pin (B) through center-link bracket (C), and secure with lynch pin.

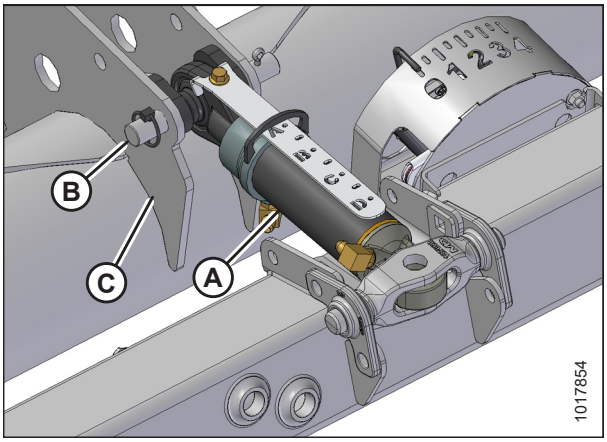

Figure 4.112: Center-Link

CAUTION

Always connect center-link before fully raising header.

CAUTION

Be sure all bystanders are clear of machine before starting engine or engaging any header drives.

11. Start the engine and slowly raise the float module while making sure the float module legs engage the header legs.
12. Raise the header to its full height, stop the engine, and remove the key from the ignition.
13. Engage the safety props on the combine.

14. Replace pin (B) in the header legs and secure with ring (A).

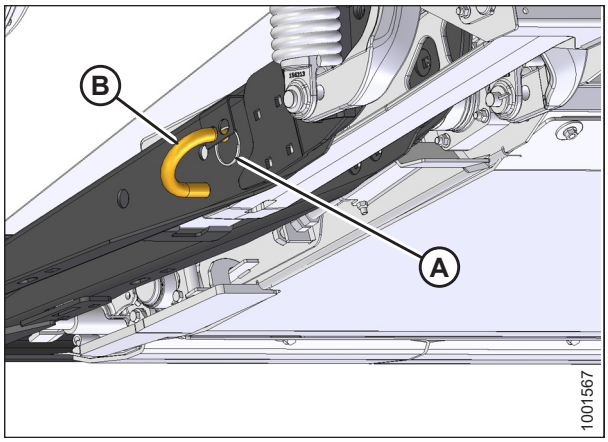

Figure 4.113: Header Leg

15. Match the colored cable ties and connect reel hydraulics (A) at the right end of the float module.

    NOTE:

    If optional multicoupler is installed for reel hydraulics, raise handle on float module, and place coupler on float module receptacle. Lower handle to lock coupler.

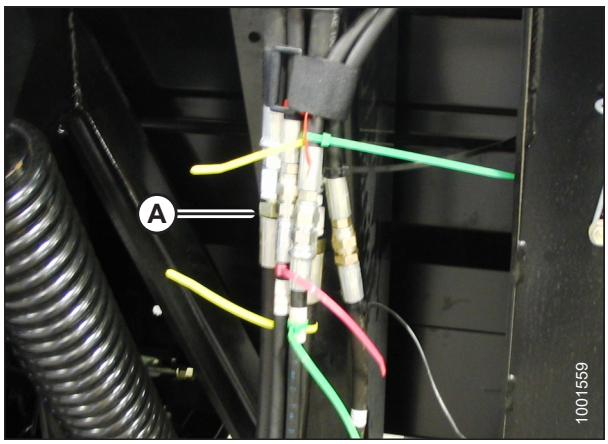

Figure 4.114: Reel Hydraulics

CAUTION

Be sure all bystanders are clear of machine before starting engine or engaging any header drives.

16. Remove the lift cylinder locks, start the engine, and lower the header to the ground. Adjust the header angle to the steepest setting (longest center-link).
17. Raise the reel to its full height.
18. Shut down the engine and remove the key from the ignition.
19. Engage the reel safety props.

WARNING

Keep hands clear of the area between guards and knife at all times.

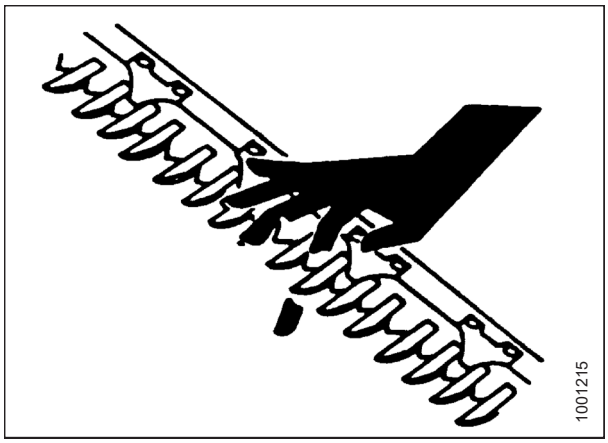

Figure 4.115: Cutterbar Hazard

20. Remove screw (A) and remove nut and bolt (B) from both sides of the opening to allow the attachment of the float module deck.
21. Rotate latch (C) forward and down to engage the transition pan tube.

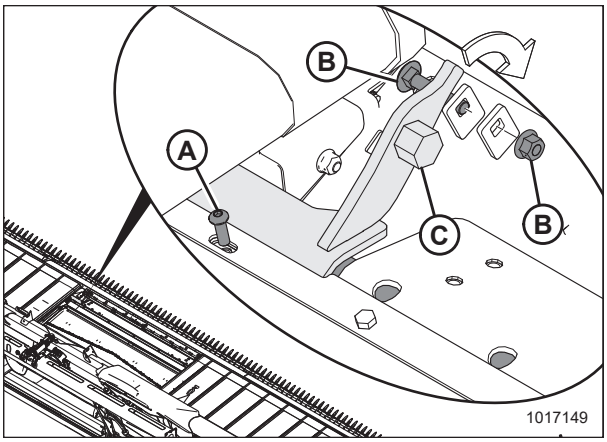

Figure 4.116: Float Module Latch

22. Use a 24 mm (15/16 in.) wrench on hex bolt (C) to rotate latch downwards and slightly raise the feed deck. Install nut and bolt (B) to lock the latch position.
23. Install screw (A).
24. Repeat for the opposite side of the feed draper deck.

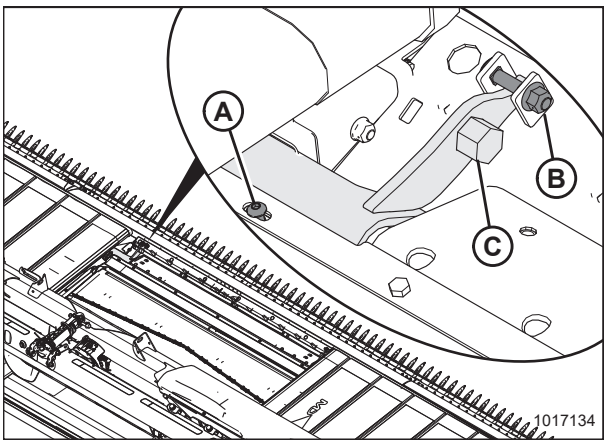

Figure 4.117: Float Module Latch

25. Install fillers (B) on transition pan support angle (C) using two bolts (A).

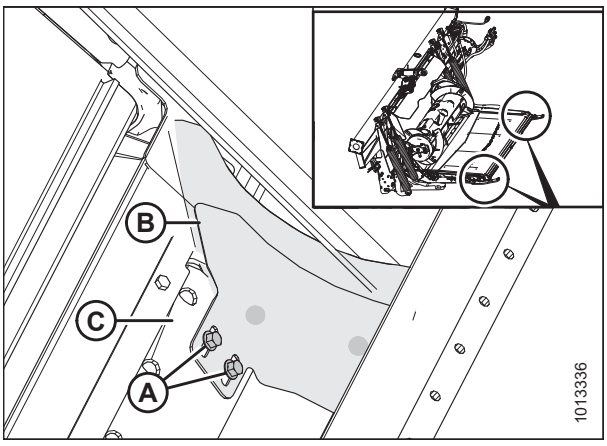

Figure 4.118: Fillers

26. Match the colored cable ties, and connect the knife and draper drive hydraulics (A).
27. Attach electrical connector (B) as follows:
    a. Remove the cover on the receptacle. Ensure it is clean and damage free.
    b. Align the lugs on the connector with the slots in the receptacle, push the connector onto the receptacle, and turn the collar on the connector to lock it in place.
    c. Attach the cover to the mating cover on the combine wiring harness.

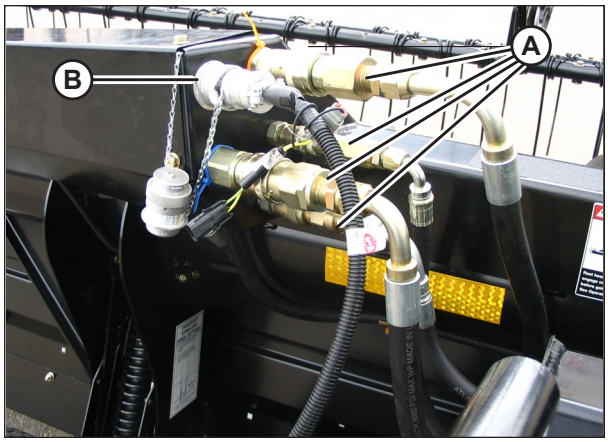

Figure 4.119: Header Connections

28. Connect the quick disconnects (if installed) as follows:
    a. Remove the covers (if installed) from the receptacles and hose ends.
    b. Check the connectors and clean if necessary.
    c. Push hose connector (A) onto mating receptacle (B) until the collar on the mating receptacle snaps into the lock position.

    NOTE:

    Ensure the hoses are clear of the driveline and adjacent structure.

    NOTE:

    It is not necessary to bleed the system by loosening fittings.

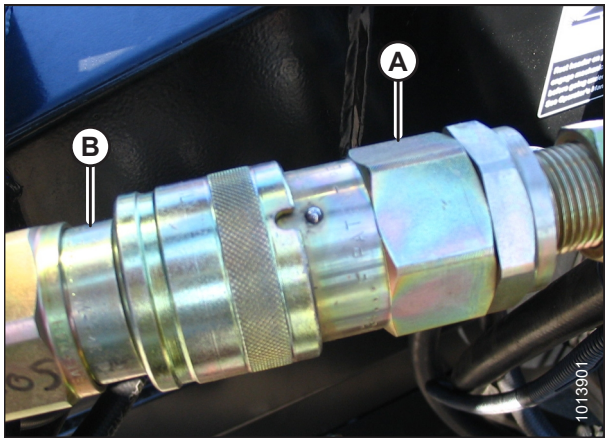

Figure 4.120: Quick Disconnect Coupling

29. Check the float and confirm the header is level. Refer to the following:
    - *Checking and Adjusting Header Float, page 95*
    - *3.10 Leveling the Header, page 348*

CAUTION

Be sure all bystanders are clear of machine before starting engine or engaging any header drives.

30. Start the combine and perform the following inspections:
    - Raise and lower the reel to ensure the hoses are properly connected.
    - Run the header to ensure the hoses are properly connected.
31. Check for leaks.

4.8.2 Detaching Header from FM100 Float Module

DANGER

To avoid bodily injury or death from unexpected start-up or fall of raised machine, always stop engine, remove key, and engage safety props before going under header for any reason.

WARNING

Keep hands clear of the area between guards and knife at all times.

CAUTION

Wear heavy gloves when working around or handling knives.

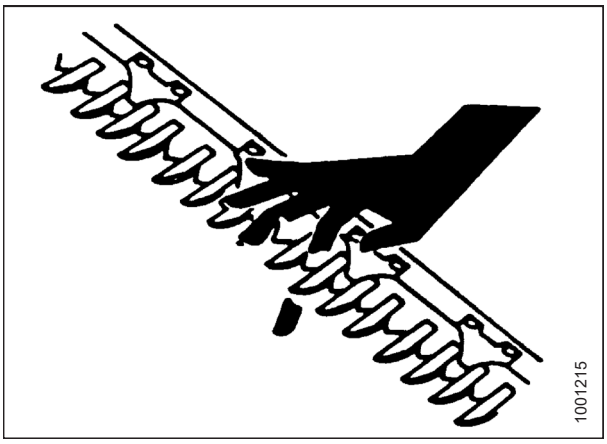

Figure 4.121: Cutterbar Hazard

1. Start the engine and the lower header.
2. Increase clearance under the float module feed draper by tilting the header and fully extending cylinder (B) until indicator (A) is at position **D**.
3. Raise the reel to its full height.
4. Stop the engine and the remove key from the ignition.
5. Engage the reel safety props.

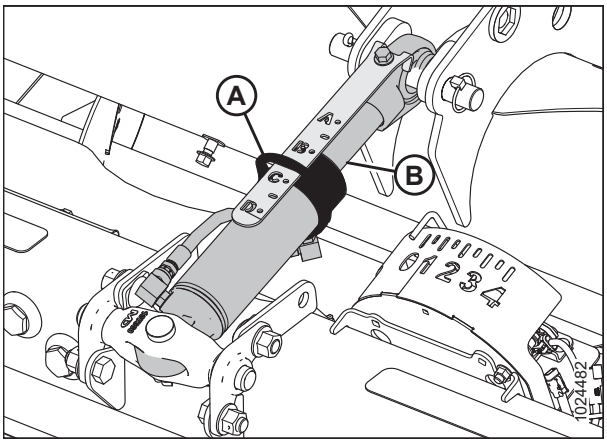

Figure 4.122: Center-Link

6. Engage the float locks by pulling each float lock handle (A) away from the float module and setting it in locked position (B).

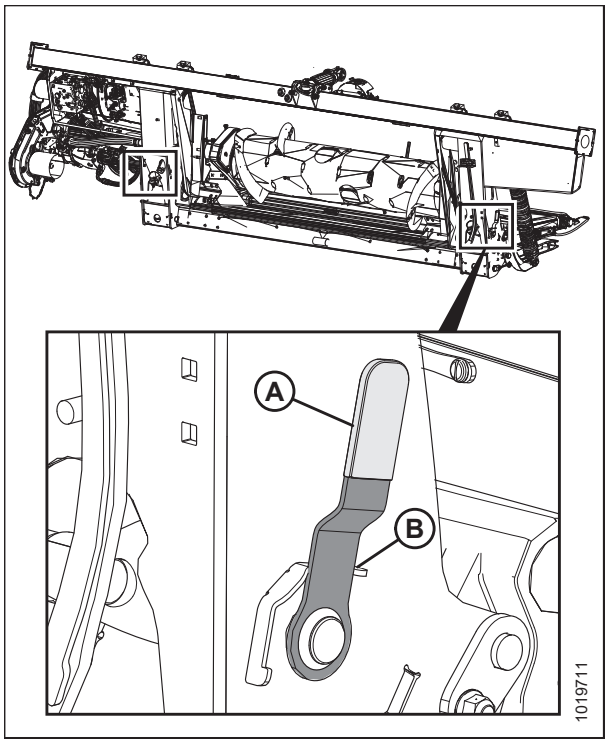

Figure 4.123: Float Lock

7. Remove two bolts (A) and fillers (B) from transition pan support angle (C). Repeat on opposite side.

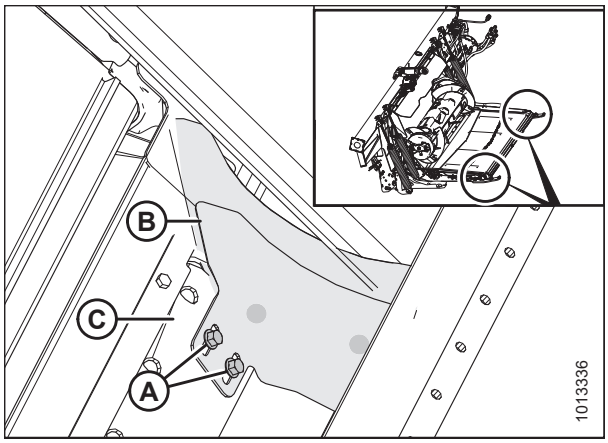

Figure 4.124: Fillers

8. Remove and retain screw (A).
9. Remove the 9/16 in. nut from bolt (B).
10. Use a 24 mm (15/16 in.) wrench on hex bolt (C) to rotate latch downwards and slightly raise the feed deck to remove bolt (B).
11. Rotate latch (C) up and back to lower the float module deck and disengage the transition pan tube.
12. Install screw (A).
13. Repeat for the opposite side of the feed draper deck.

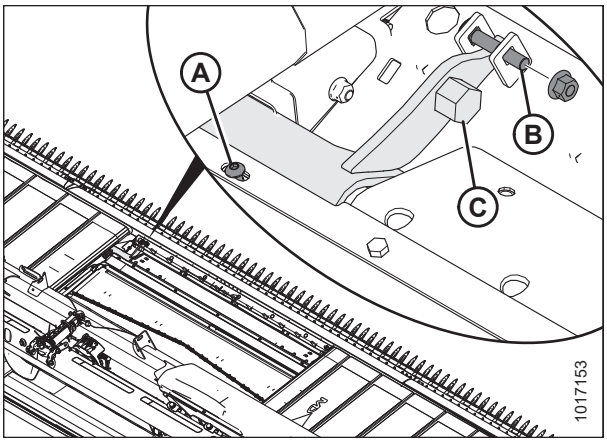

Figure 4.125: Float Module Latch

WARNING

Never start or move the machine until you are sure all bystanders have cleared the area.

14. Disengage the reel safety props, start the engine, lower the reel, and fully raise the header.
15. Stop the engine, remove the key from the ignition, and engage the combine safety props.
16. Remove ring (A) from pin (B), and remove the pins from the header legs at the delivery opening.

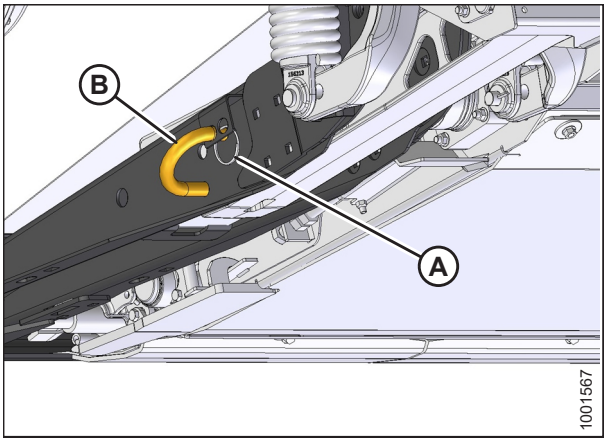

Figure 4.126: Header Leg

17. Place a 150 mm (6 in.) block under jack stand (A) to assist with center-link disconnection.
18. Disengage the combine safety props, start the engine, and lower the header until the jack stand rests on the block or until the stabilizer wheels are on the ground.

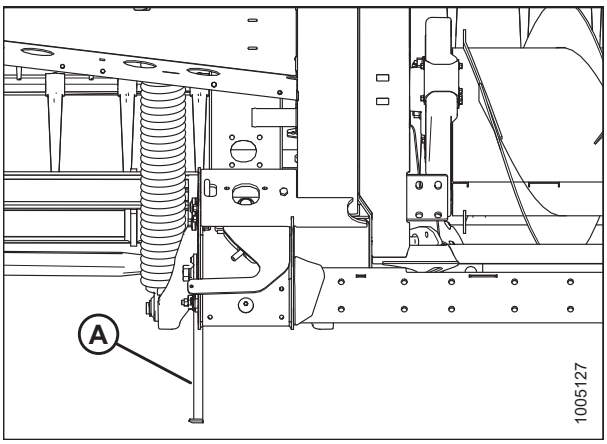

Figure 4.127: Jack Stand

19. Disconnect the hydraulic center-link as follows:
    a. Remove lynch pin and clevis pin (A), and lift center-link (B) clear of the bracket.
    b. Replace clevis pin (A) and secure with lynch pin.

    NOTE:

    It may be necessary to raise or lower the feeder house to adjust the length of the center-link and relieve excess load on the center-link.

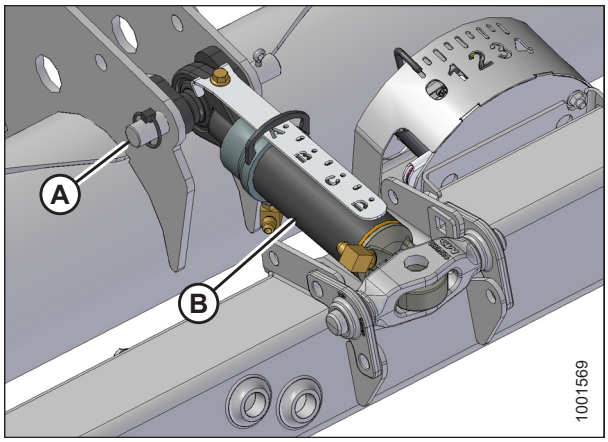

Figure 4.128: Hydraulic Center-Link

20. Disconnect knife and draper drive hydraulic hoses (A). Immediately cap the hoses to prevent oil loss.
21. Store and secure the hoses on the float module frame.
22. Disconnect electrical connector (B) by turning the collar counterclockwise and pulling on the connector to disengage.
23. Store and secure the hoses and electrical connector on the float module.

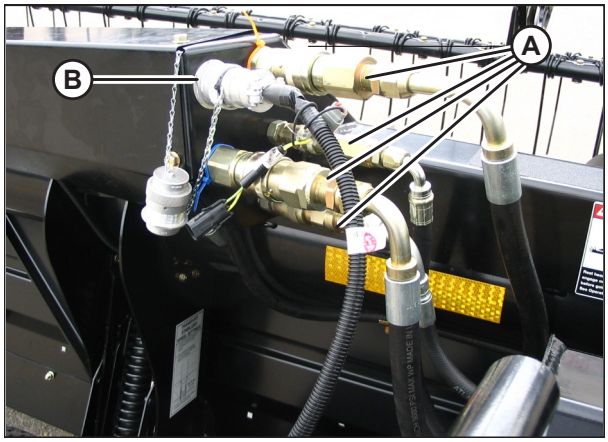

Figure 4.129: Header Connections

24. Disconnect the quick disconnects (if installed) as follows:
    a. Line up slot (A) in the collar with pin (B) on the connector.
    b. Push the collar towards the pin, and pull the connector to disengage.
    c. Install plugs or caps on the hose ends (if equipped).

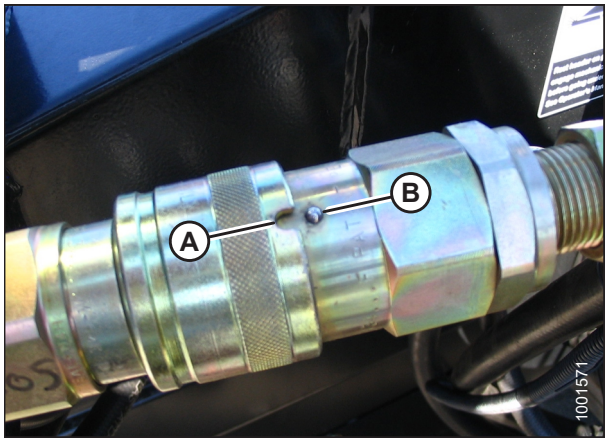

Figure 4.130: Quick Disconnect Coupling

NOTE:

If colored plastic ties are missing, replace them before disconnecting hoses.

25. Disconnect reel hydraulics (A). Immediately cap hoses to prevent oil loss.

NOTE:

If the optional multicoupler is installed for the reel hydraulics, press the button on the side, raise the handle on the float module, and remove the coupler.

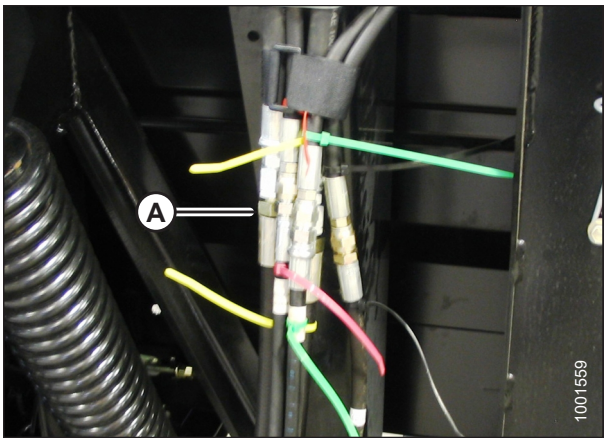

Figure 4.131: Reel Hydraulics

26. Store and secure the hoses and electrical connector on the float module at position (A) as shown.
27. Ensure the header is on the ground or is supported by the wheels in transport mode.

WARNING

Never start or move the machine until you are sure all bystanders have cleared the area.

28. Start the engine and slowly back away in a straight line from header.
29. Stop the engine and remove the key from the ignition.

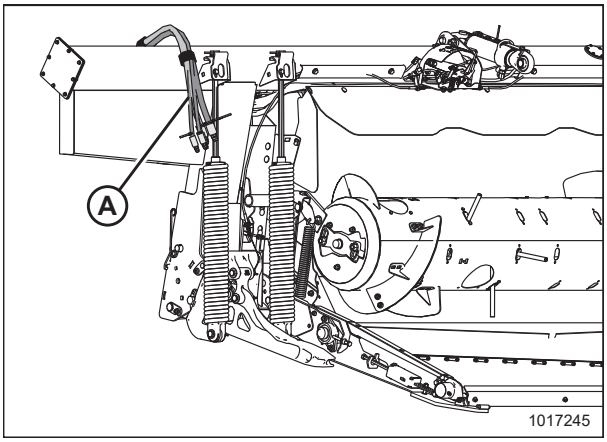

Figure 4.132: Hose Storage

30. Replace pins (B) in the header legs and secure with rings (A).

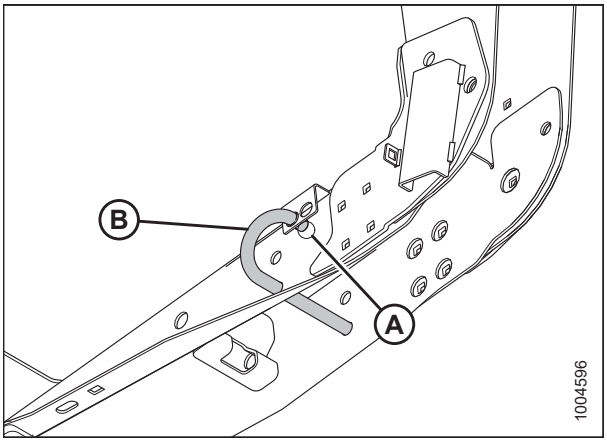

Figure 4.133: Header Leg

Chapter 5: Maintenance and Servicing

The following instructions provide information about routine header service. Detailed maintenance and service information is available in the technical service manual that is available from your Dealer. A parts catalog is provided in the plastic manual case inside the left endshield of the header.

Log hours of operation and use the maintenance record provided (refer to *5.3.1 Maintenance Schedule/Record, page 432*) to keep track of your scheduled maintenance.

5.1 Preparing Machine for Servicing

DANGER

To avoid bodily injury or death from unexpected start-up or fall of a raised machine, always stop engine and remove key before leaving the operator's seat, and always engage safety props before going under the machine for any reason.

CAUTION

To avoid personal injury, follow all the safety precautions listed before servicing header or opening drive covers.

1. Lower the header fully. If it is necessary to service the header in the raised position, always engage the safety props.
2. Shut down the engine, and remove the key from the ignition.
3. Engage the park brake.
4. Wait for all moving parts to stop.

5.2 Maintenance Specifications

5.2.1 Installing a Sealed Bearing

1. Clean the shaft and apply a rust-preventive coating.
2. Install flangette (A), bearing (B), second flangette (C), and then lock the collar (D).

   NOTE:

   The locking cam is only on one side of the bearing.
3. Install flangette bolts (E). Do **NOT** tighten.
4. Position the shaft correctly, and lock the lock collar with a punch. Lock the collar in the same direction the shaft rotates, and tighten the setscrew in the collar.
5. Tighten flangette bolts (E).
6. Loosen the flangette bolts on the mating bearing (one turn) and then retighten. This will allow the bearing to properly line up.

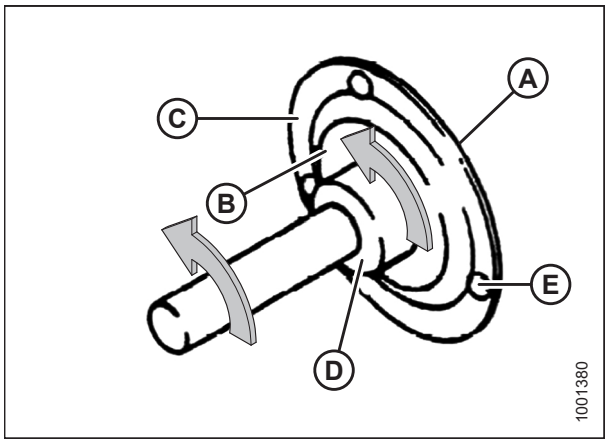

Figure 5.1: Sealed Bearing

5.3 Maintenance Requirements

Regular maintenance is the best insurance against early wear and untimely breakdowns. Following the maintenance schedule will increase your machine's life. Log hours of operation, use the maintenance record, and keep copies of your maintenance records (refer to *5.3.1 Maintenance Schedule/Record, page 432*).

Periodic maintenance requirements are organized according to service intervals. If a service interval specifies more than one timeframe, e.g., 100 hours or annually, service the machine at whichever interval is reached first.

IMPORTANT:

Recommended intervals are for average conditions. Service the machine more often if operating under adverse conditions (severe dust, extra heavy loads, etc.).

When servicing the machine, refer to the appropriate section in this Maintenance and Servicing chapter and use only specified fluids and lubricants. Refer to inside back cover for recommended fluids and lubricants.

CAUTION

Carefully follow safety messages. For instructions, refer to *5.1 Preparing Machine for Servicing, page 429* and *1 Safety, page 1*.

5.3.1 Maintenance Schedule/Record

Action:		✓ – Check	♦ – Lubricate	▲ – Change
✎	Hour meter reading			
✎	Service date			
✎	Serviced by			
First Use		Refer to *5.3.2 Break-In Inspection, page 435*.		
End of Season		Refer to *5.3.4 End-of-Season Service, page 436*.		
10 Hours or Daily (Whichever Occurs First)				
✓	Hydraulic hoses and lines; refer to *5.3.5 Checking Hydraulic Hoses and Lines, page 437*	**NOTE: MacDon recommends keeping a record of daily maintenance as evidence of a properly maintained machine; however, daily maintenance records are not required to meet normal warranty conditions.**		
✓	Knife sections, guards, and hold-downs; refer to *5.8 Knife, page 487*	**NOTE: MacDon recommends keeping a record of daily maintenance as evidence of a properly maintained machine; however, daily maintenance records are not required to meet normal warranty conditions.**		
✓	Tire pressure; refer to *5.15.3 Checking Tire Pressure, page 621*	**NOTE: MacDon recommends keeping a record of daily maintenance as evidence of a properly maintained machine; however, daily maintenance records are not required to meet normal warranty conditions.**		
✓	Link holder hooks; refer to *5.10.7 Checking Link Holder Hooks, page 545*	**NOTE: MacDon recommends keeping a record of daily maintenance as evidence of a properly maintained machine; however, daily maintenance records are not required to meet normal warranty conditions.**		
25 Hours				
✓	Hydraulic oil level at reservoir; refer to *5.4.1 Checking Oil Level in Hydraulic Reservoir, page 454*	**NOTE: MacDon recommends keeping a record of daily maintenance as evidence of a properly maintained machine; however, daily maintenance records are not required to meet normal warranty conditions.**		
♦	Knifeheads; refer to *Every 25 Hours, page 438*	**NOTE: MacDon recommends keeping a record of daily maintenance as evidence of a properly maintained machine; however, daily maintenance records are not required to meet normal warranty conditions.**		
50 Hours or Annually				
♦	Driveline and driveline universals; refer to *Every 50 Hours, page 439*			
♦	Upper cross auger center support and U-joint; refer to *Every 50 Hours, page 439*			
♦	Center draper roller bearings, 3 locations; refer to *Every 50 Hours, page 439*			
▲	Knife drive box lubricant (first 50 hours only); refer to *Changing Oil in Knife Drive Box, page 509*			

▲	Header drive gearbox lubricant (first 50 hours only); refer to *Changing Oil in Header Drive Gearbox, page 453*																	
100 Hours or Annually (Whichever Occurs First)																		
✓	Auger to pan and feed draper clearance; refer to *5.7.1 Adjusting Auger to Pan Clearance, page 466*																	
✓	Draper seal; refer to *5.12.5 Adjusting Deck Height, page 560*																	
✓	Gearbox lubricant level; refer to *Checking Oil Level in Header Drive Gearbox, page 451*																	
✓	Reel drive chain tension; refer to *5.14.2 Reel Drive Chain Tension, page 604*																	
✓	Reel finger/cutterbar clearance; refer to *Adjusting Reel Clearance, page 576*																	
✓	Knife drive belt tension; refer to *5.9.2 Knife Drive Belts, page 510*																	
✓	Wheel bolt torque; refer to *5.15.1 Checking Wheel Bolt Torque, page 619*																	
✓	Knife drive box lubricant level; refer to *Checking Knife Drive Box, page 500*																	
✓	Knife drive box mounting bolts; refer to *Checking Mounting Bolts, page 502*																	
♦	Auger drive chain; refer to *Every 100 Hours, page 441*																	
♦	Float pivots; refer to *Every 100 Hours, page 441*																	
♦	Float module auger pivots; refer to *Every 100 Hours, page 441*																	
♦	Float spring tensioners; refer to *Every 100 Hours, page 441*																	
♦	Reel drive chain; refer to *Every 100 Hours, page 441*																	
♦	Upper cross auger right bearing; refer to *Every 100 Hours, page 441*																	
200 Hours or Annually (Whichever Occurs First)																		
✓	Draper roller bearings; refer to *5.12.6 Draper Roller Maintenance, page 563*																	
250 Hours or Annually (Whichever Occurs First)																		
✓	Draper seal; refer to *5.12.5 Adjusting Deck Height, page 560*																	
♦	Reel drive U-joint; refer to *Every 250 Hours, page 444*																	

●	Bell crank linkage; refer to *3.10 Leveling the Header, page 348*																	
●	Transport axle pivot bushings; refer to *Every 250 Hours, page 444*																	
▲	Hydraulic oil filter; refer to *5.4.4 Changing Oil Filter, page 457*																	
500 Hours or Annually (Whichever Occurs First)																		
✓	Draper seal; refer to *5.12.5 Adjusting Deck Height, page 560*																	
●	Reel shaft bearings; refer to *Every 500 Hours, page 445*																	
●	Stabilizer/slow speed transport wheel bearings; refer to *Every 500 Hours, page 445*																	
✓	Header drive gearbox chain tension; refer to *5.7.3 Adjusting Auger Drive Chain Tension, page 470*																	
1000 Hours or 3 Years (Whichever Occurs First)																		
▲	Knife drive box lubricant; refer to *Changing Oil in Knife Drive Box, page 509*																	
▲	Header drive gearbox lubricant; refer to *Changing Oil in Header Drive Gearbox, page 453*																	
▲	Hydraulic oil; refer to *5.4.3 Changing Oil in Hydraulic Reservoir, page 455*																	

5.3.2 Break-In Inspection

Break-in inspection involves checking belts, fluids, and performing general machine inspections for loose hardware or other areas of concern. Break-in inspections ensure that all components can operate for an extended period without requiring service or replacement. The break-in period is the first 50 hours of operation after the machine's initial start up.

Inspection Instance	Item	Refer to
5 Minutes	Check hydraulic oil level in reservoir (check after first run-up and after the hydraulic hoses have filled with oil).	*5.4.1 Checking Oil Level in Hydraulic Reservoir, page 454*
5 Hours	Check for loose hardware and tighten to required torque.	*8.1 Torque Specifications, page 653*
5 Hours	Check knife drive belts tension (check periodically for first 50 hours).	• *Checking and Tensioning, page 513* • *Checking and Tensioning Timed Double-Knife Drive Belts, page 519*
10 Hours	Check auger drive chain tension.	*5.7.2 Checking Auger Drive Chain Tension, page 468*
10 Hours	Check knife drive box mounting bolts.	*Checking Mounting Bolts, page 502*
50 Hours	Change float module gearbox oil.	*Changing Oil in Header Drive Gearbox, page 453*
50 Hours	Change float module hydraulic oil filter.	*5.4.4 Changing Oil Filter, page 457*
50 Hours	Change knife drive box lubricant.	*Changing Oil in Knife Drive Box, page 509*
50 Hours	Check gearbox chain tension.	*5.6.5 Adjusting Gearbox Drive Chain Tension, page 465*
50 Hours	Check deck height adjustment.	*5.12.5 Adjusting Deck Height, page 560*

5.3.3 Preseason Servicing

Perform the following procedures at the beginning of each operating season:

CAUTION

- **Review this manual to refresh your memory on the safety and operating recommendations.**
- **Review all the safety decals and other decals on the header and note the hazard areas.**
- **Be sure all the shields and guards are properly installed and secured. Never alter or remove safety equipment.**
- **Be sure you understand and have practiced safe use of all controls. Know the capacity and operating characteristics of the machine.**
- **Ensure you have a first aid kit and fire extinguisher. Know where they are and how to use them.**

1. Lubricate the machine completely. For instructions, refer to *5.3.6 Lubrication and Servicing, page 438*.
2. Adjust the tension on the drive belts. For instructions, refer to *Checking and Tensioning, page 513* or *Checking and Tensioning Timed Double-Knife Drive Belts, page 519*.
3. Perform all annual maintenance tasks. For instructions, refer to *5.3.1 Maintenance Schedule/Record, page 432*.

5.3.4 End-of-Season Service

Perform the following procedures at the end of each operating season:

CAUTION

Never use gasoline, naphtha, or any volatile material for cleaning purposes. These materials may be toxic and/or flammable.

CAUTION

Cover cutterbar and knife guards to prevent injury from accidental contact.

1. Clean the header thoroughly.
2. Bring the machine for storage in a dry and protected place if possible. If storing outside, always cover the machine with a waterproof canvas or other protective material.

   NOTE:

   If storing the machine outside, remove the drapers and store them in a dark, dry place. If not removing the drapers, store the header with the cutterbar lowered so water and snow will not accumulate on the drapers. The weight of water and snow accumulation puts excessive stress on the drapers and header.
3. Lower the header onto blocks to keep the cutterbar off the ground.
4. Lower the reel completely. If stored outside, tie the reel to the frame to prevent rotation caused by the wind.
5. Repaint all worn or chipped painted surfaces to prevent rust.
6. Loosen the drive belts.
7. Lubricate the header thoroughly leaving excess grease on the fittings to keep moisture out of the bearings.
8. Apply grease to exposed threads, cylinder rods, and sliding surfaces of components.
9. Lubricate the knife. Refer to the inside back cover for recommended lubricants.
10. Check for worn components and repair as necessary.
11. Check for broken components and order replacements from your Dealer. Immediate repair of these items will save time and effort at the beginning of next season.
12. Replace or tighten any missing or loose hardware. For instructions, refer to *8.1 Torque Specifications, page 653*.

5.3.5 Checking Hydraulic Hoses and Lines

Check hydraulic hoses and lines daily for signs of leaks.

WARNING

- **Avoid high-pressure fluids. Escaping fluid can penetrate the skin causing serious injury. Relieve pressure before disconnecting hydraulic lines. Tighten all connections before applying pressure. Keep hands and body away from pin holes and nozzles which eject fluids under high pressure.**
- **If any fluid is injected into the skin, it must be surgically removed within a few hours by a doctor familiar with this type of injury or gangrene may result.**

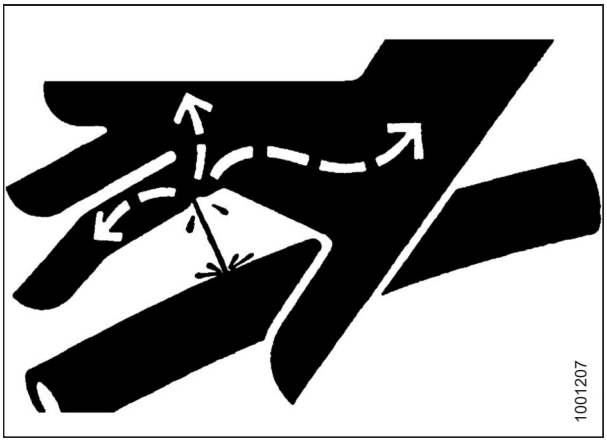

Figure 5.2: Hydraulic Pressure Hazard

- **Use a piece of cardboard or paper to search for leaks.**

IMPORTANT:

Keep hydraulic coupler tips and connectors clean. Allowing dust, dirt, water, or foreign material to enter the system is the major cause of hydraulic system damage. Do **NOT** attempt to service hydraulic systems in the field. Precision fits require a perfectly clean connection during overhaul.

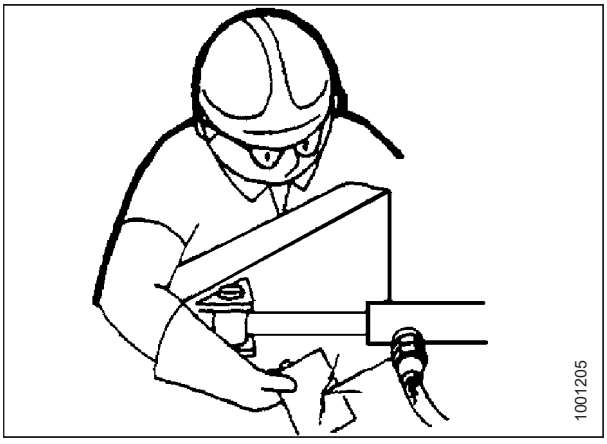

Figure 5.3: Testing for Hydraulic Leaks

5.3.6 Lubrication and Servicing

CAUTION

To avoid personal injury, before servicing header or opening drive covers, follow procedures in *5.1 Preparing Machine for Servicing, page 429*.

Refer to inside back cover for recommended lubricants.

Log hours of operation and use the Maintenance Record provided to keep a record of scheduled maintenance. Refer to *5.3.1 Maintenance Schedule/Record, page 432*.

Service Intervals

Every 10 Hours

Use high temperature extreme pressure (EP2) performance grease with 1% max molybdenum disulphide (NLGI Grade 2) lithium base unless otherwise specified.

Knife: Lubricate the knife every 10 hours or daily, except in sandy conditions. In sandy conditions, lubricate it less as sand will stick to the lubricant.

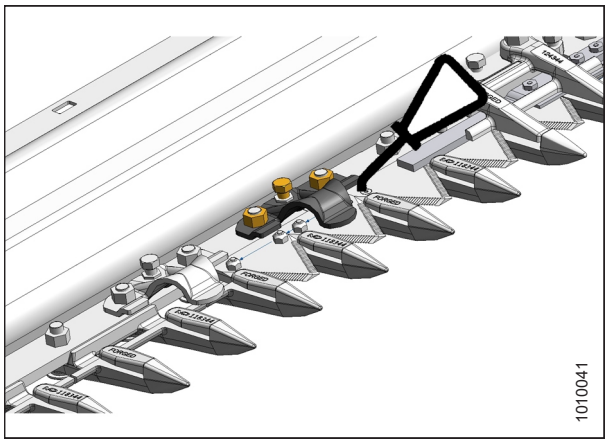

Figure 5.4: Lubricating Knife

Every 25 Hours

Use high temperature extreme pressure (EP2) performance grease with 1% max molybdenum disulphide (NLGI Grade 2) lithium base unless otherwise specified.

Knifehead: Lubricate the knifehead (A) every 25 hours. Check for signs of excessive heating on the first few guards after greasing. If required, relieve the pressure by pressing the check-ball in the grease fitting.

IMPORTANT:

Overgreasing the knifehead puts pressure on the knife, causing it to rub against the guards, resulting in excessive wear from binding. Do **NOT** overgrease the knifehead. Apply only one to two pumps using a mechanical grease gun (do **NOT** use an electric grease gun). If more than six to eight pumps of the grease gun are required to fill the cavity, replace the seal in the knifehead. For instructions, refer to *5.8.3 Removing Knifehead Bearing, page 490*.

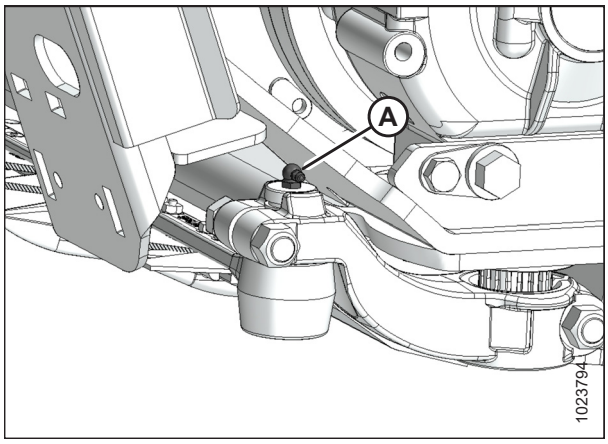

Figure 5.5: Knifehead

Every 50 Hours

NOTE:

Use high temperature extreme pressure (EP2) performance grease with 1% max molybdenum disulphide (NLGI Grade 2) lithium base unless otherwise specified.

Figure 5.6: Every 50 Hours

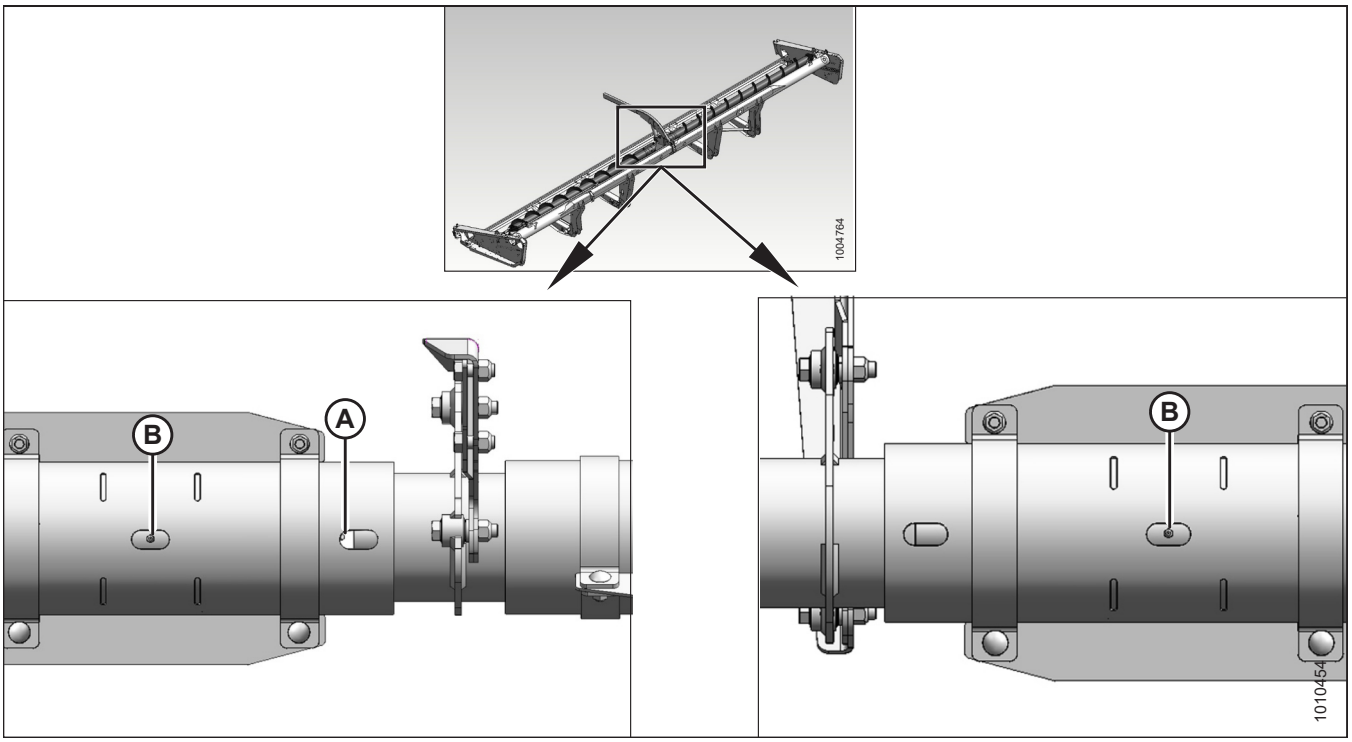

A - Upper Cross Auger U-joint[48]

B - Upper Cross Auger Bearing (Two Places)[49]

48. U-joint has an extended lubrication cross and bearing kit. Stop greasing when greasing becomes difficult or if U-joint stops taking grease. Overgreasing will damage U-joint. Six to eight pumps are sufficient at first grease (factory). Increase grease interval as U-joint wears and requires more than six pumps.
49. Use high temperature extreme pressure (EP2) performance grease with 1.5–5.0% max molybdenum disulphide (NLGI Grade 2) lithium base.

Figure 5.7: Every 50 Hours

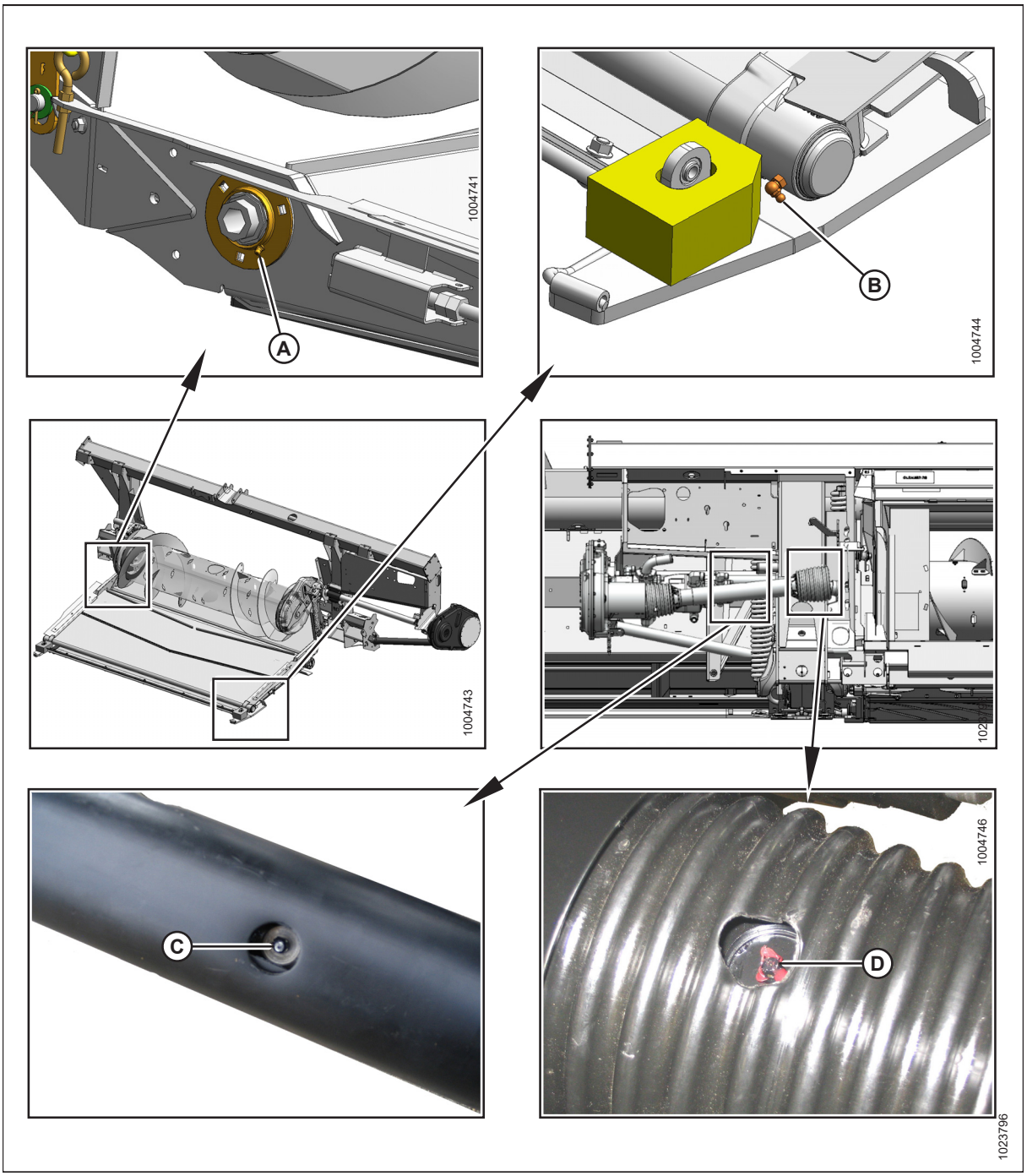

A - Drive Roller Bearing
B - Idler Roller Bearing (Both Sides)
C - Driveline Slip Joint[50]
D - Driveline Universal (Two Places)

50. Use high temperature extreme pressure (EP2) performance grease with 10% max molybdenum disulphide (NLGI Grade 2) lithium base.

Every 100 Hours

Use high temperature extreme pressure (EP2) performance grease with 1% max molybdenum disulphide (NLGI Grade 2) lithium base unless otherwise specified.

Figure 5.8: Every 100 Hours

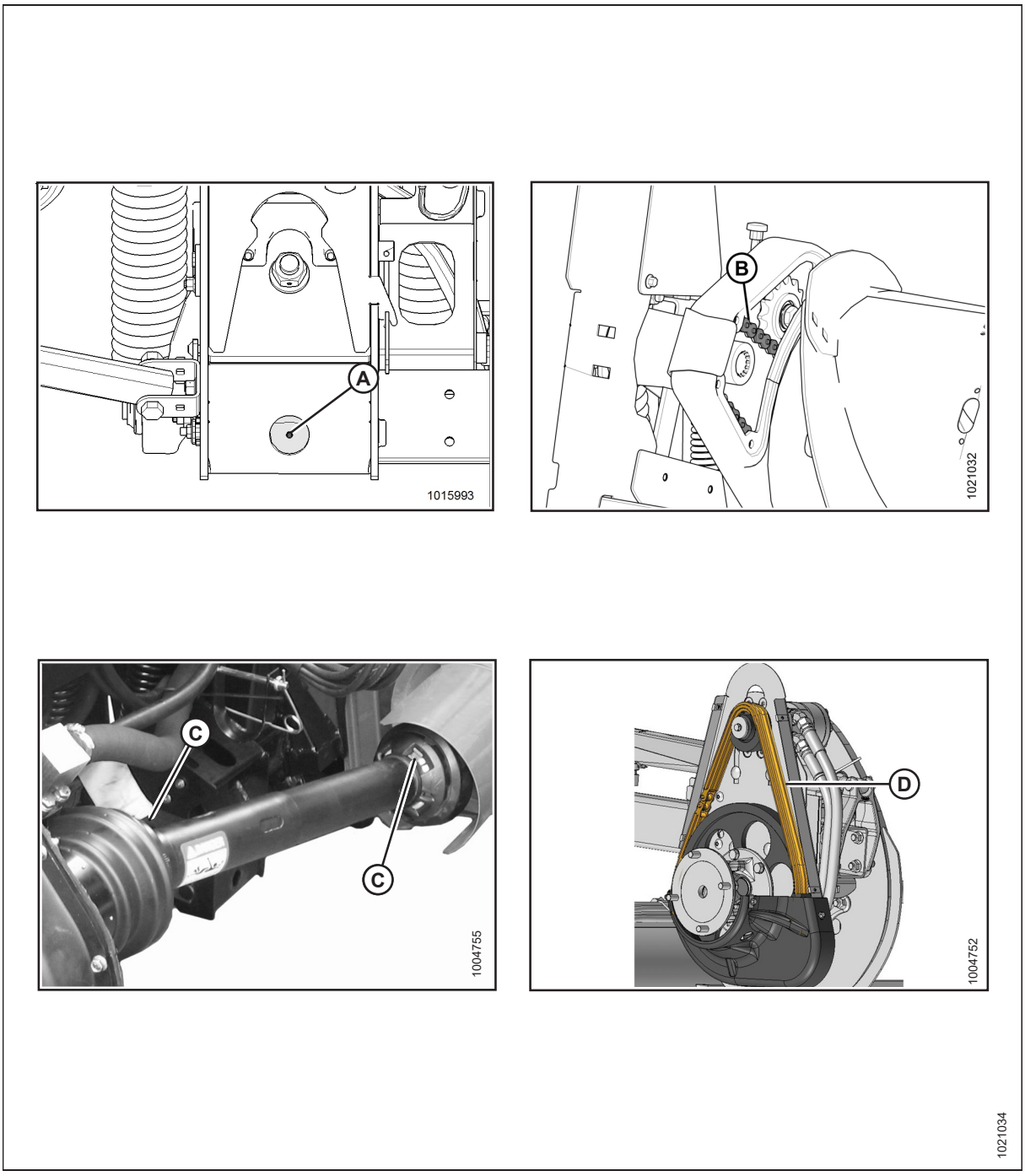

A - Float Pivot – Right and Left
B - Auger Drive Chain (refer to *Lubricating Auger Drive Chain, page 450*)
C - Driveline Guard – Two Places
D - Reel Drive Chain – One Place (refer to *Lubricating Reel Drive Chain – Double Reel, page 448*)

Figure 5.9: Every 100 Hours

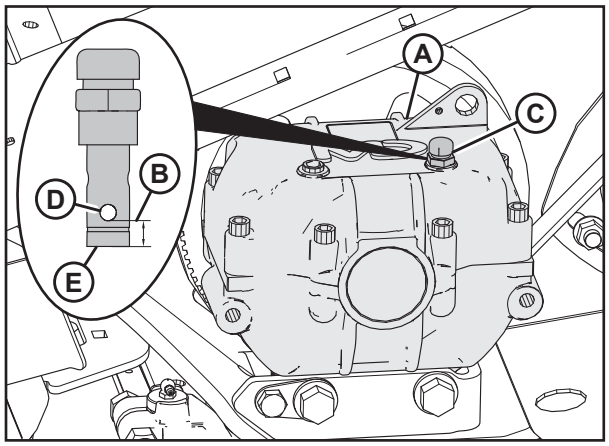

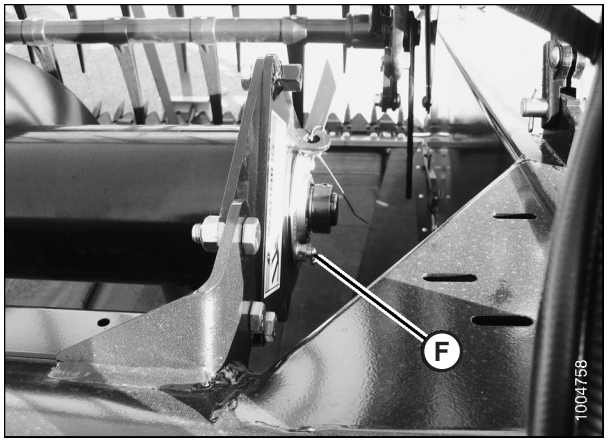

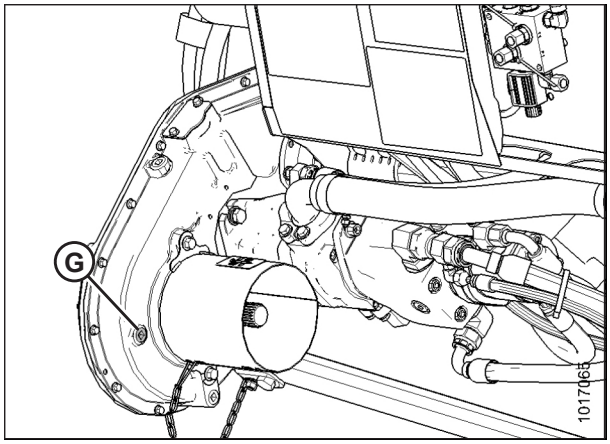

1020660

A - Knife Drive Box (Check Oil Level [B] on Dipstick [C]: Between Lowest Edge of Hole [D] and Bottom [E] of Dipstick)
F - Upper Cross Auger Bearing (One Place)
G - Main Drive Gearbox Oil Level (refer to *Lubricating Header Drive Gearbox, page 451*)

Figure 5.10: Every 100 Hours

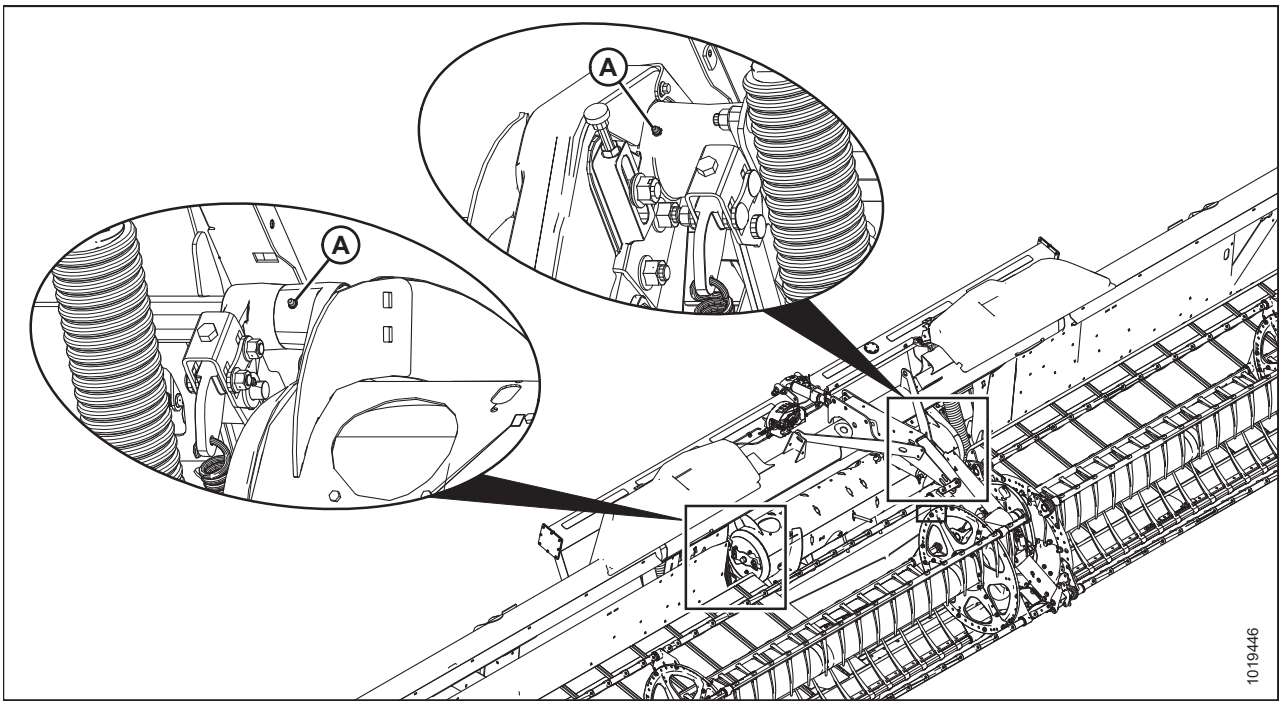

A - Auger Pivots

Every 250 Hours

Use high temperature extreme pressure (EP2) performance grease with 1% max molybdenum disulphide (NLGI Grade 2) lithium base unless otherwise specified.

Figure 5.11: Every 250 Hours

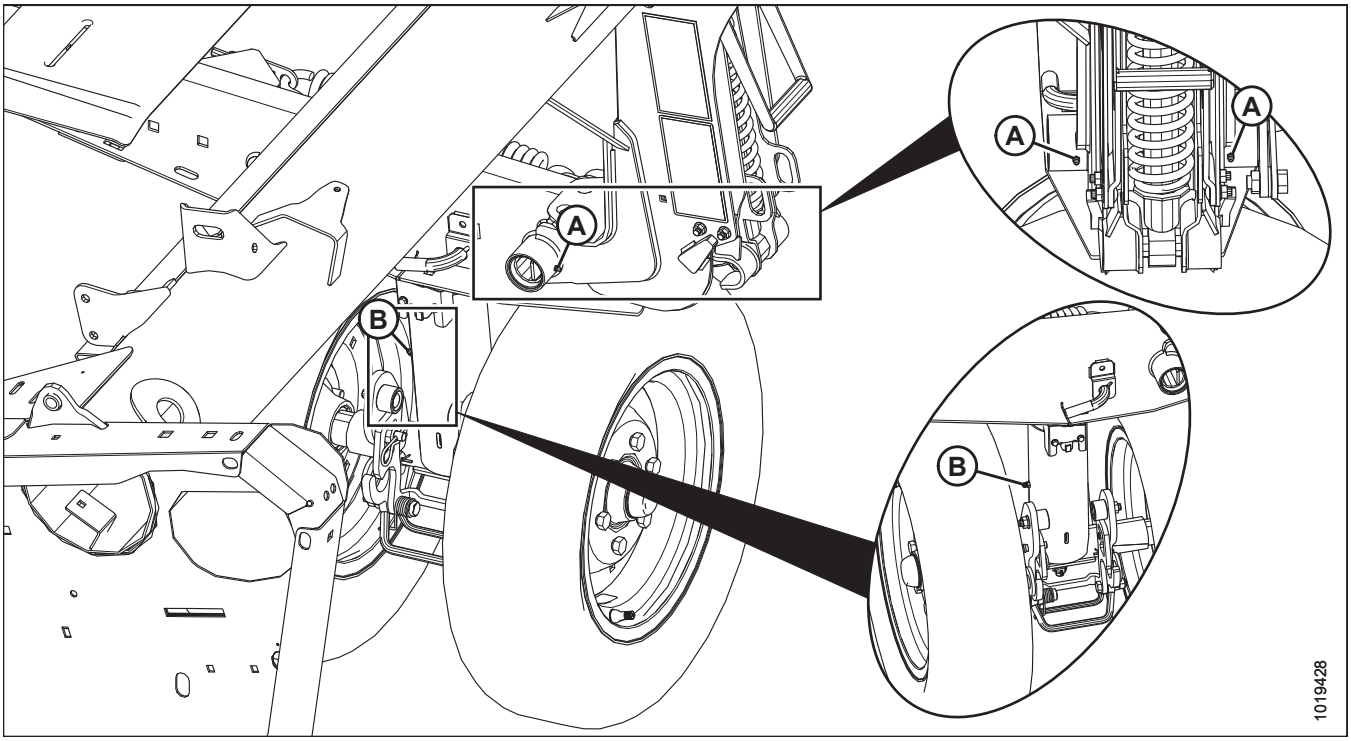

A - Frame/Wheel Pivot (Front and Rear) – Both Sides

B - Front Wheel Pivot (One Place)

Change oil filter (A) every 250 hours of operation. For instructions, refer to *5.4.4 Changing Oil Filter, page 457* for instructions.

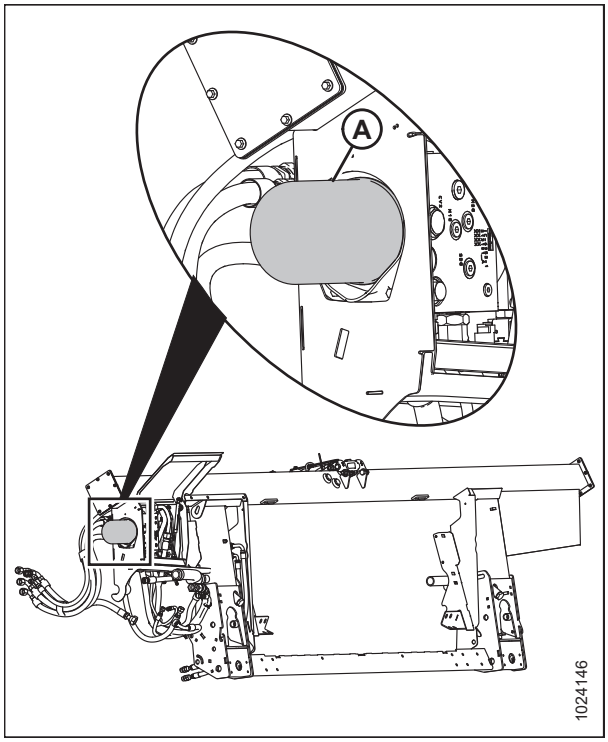

Figure 5.12: Every 250 Hours

Every 500 Hours

Use high temperature extreme pressure (EP2) performance grease with 1% max molybdenum disulphide (NLGI Grade 2) lithium base unless otherwise specified.

Figure 5.13: Every 500 Hours

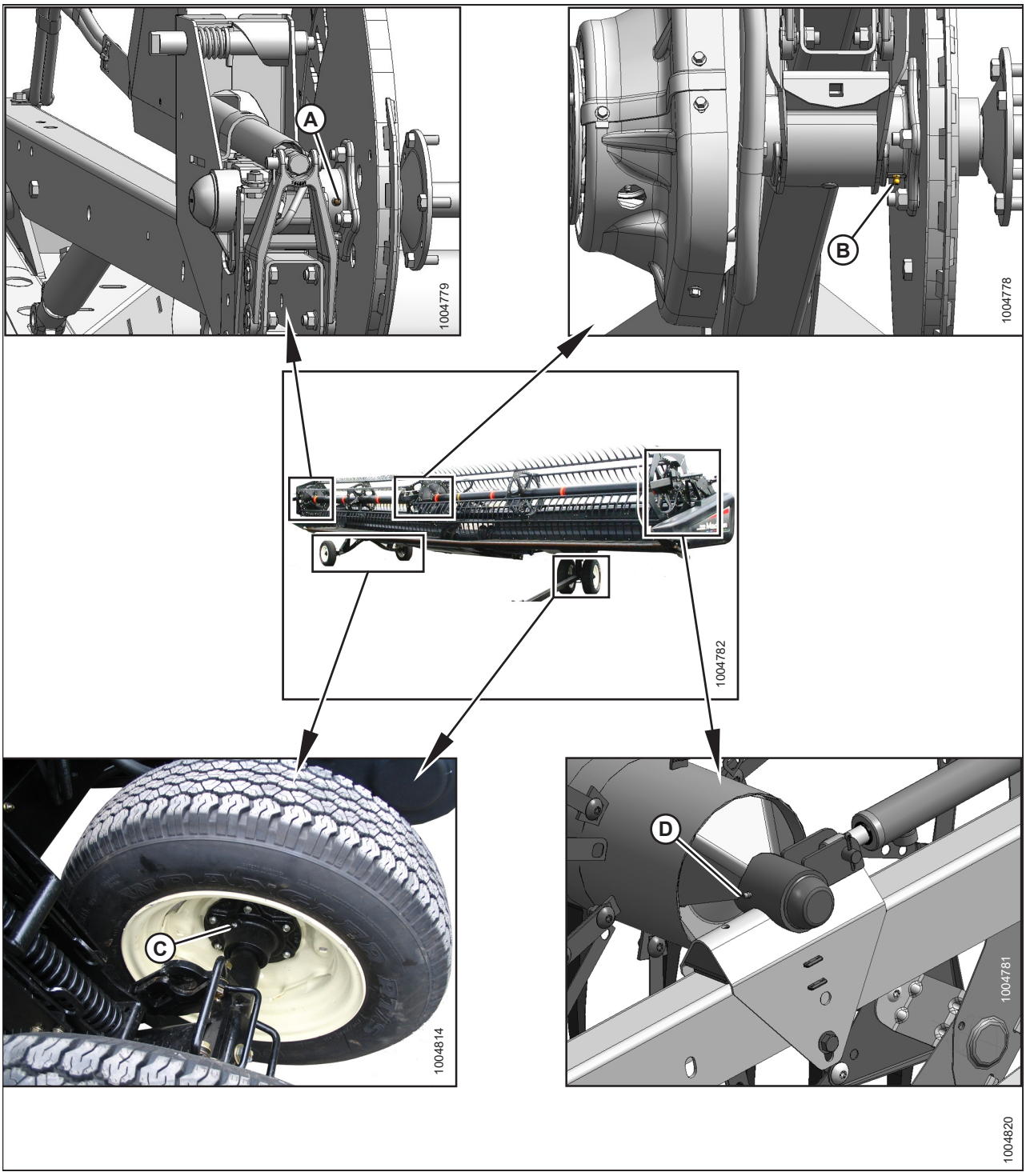

A - Reel Right Bearing (One Place)
B - Reel Center Bearing (One Place)
C - Wheel Bearings (Four Places)
D - Reel Left Bearing (One Place)

Greasing Procedure

Greasing points are identified on the machine by decals showing a grease gun and grease interval in hours of operation. Grease point layout decals are located on the header and on the right side of the float module.

WARNING

To avoid injury or death from unexpected start-up of machine, always stop the engine and remove the key from the ignition before leaving the operator's seat for any reason.

Refer to inside back cover for recommended lubricants.

Log hours of operation and use the Maintenance Record provided to keep a record of scheduled maintenance. Refer to *5.3.1 Maintenance Schedule/Record, page 432*.

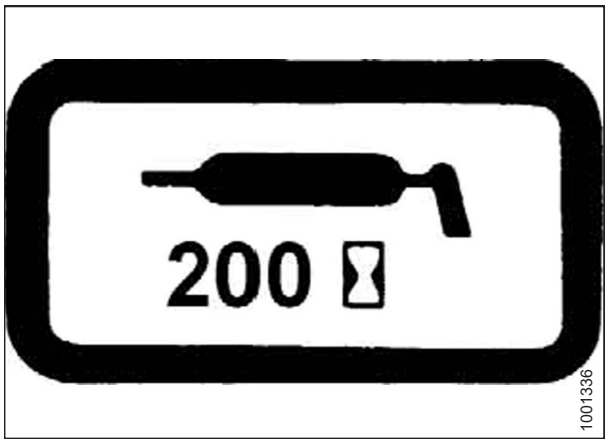

Figure 5.14: Greasing Interval Decal

1. Shut down the engine, and remove the key from the ignition.
2. Wipe grease fitting with a clean cloth before greasing to avoid injecting dirt and grit.

   IMPORTANT:

   Use clean, high-temperature, extreme-pressure grease only.
3. Inject grease through fitting with grease gun until grease overflows fitting (except where noted).
4. Leave excess grease on fitting to keep out dirt.
5. Replace any loose or broken fittings immediately.
6. Remove and thoroughly clean any fitting that will not take grease. Also clean lubricant passageway. Replace fitting if necessary.

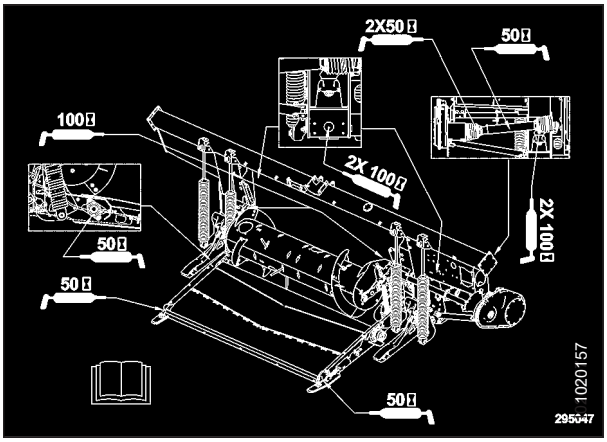

Figure 5.15: FM100 Grease Point Decal

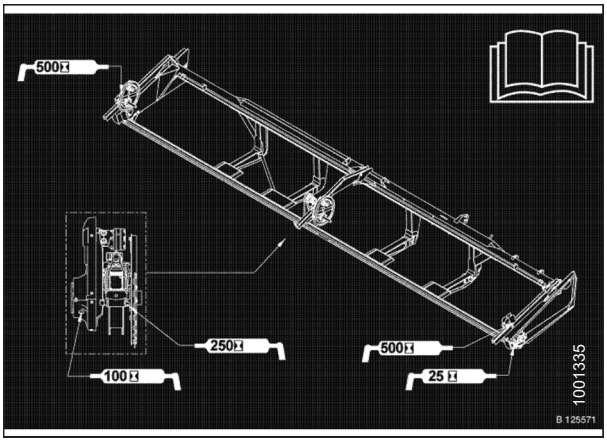

Figure 5.16: Single-Knife Header Grease Point Decal

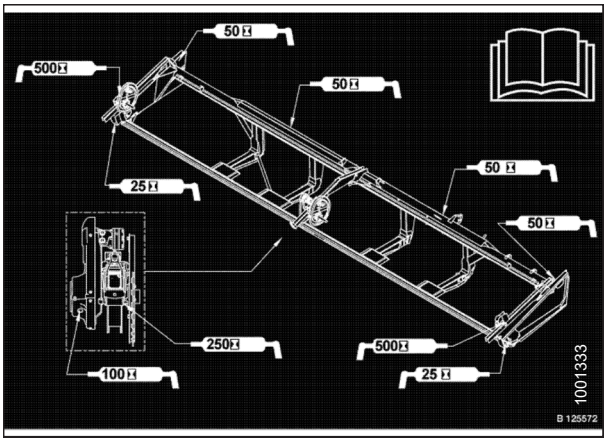

Figure 5.17: Double-Knife Header Grease Point Decal

Lubricating Reel Drive Chain – Double Reel

DANGER

To avoid injury or death from unexpected start-up of machine, always stop the engine and remove the key from the ignition before leaving the operator's seat for any reason.

1. Remove six bolts (A) securing upper cover (B) to the reel drive and lower cover (C).
2. Remove upper cover (B).

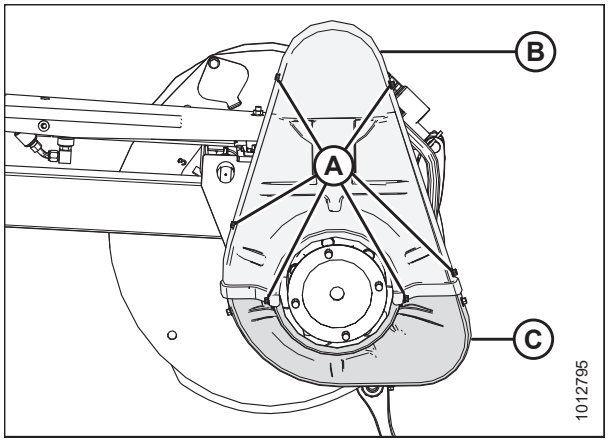

Figure 5.18: Drive Cover – Double Reel

3. Remove three bolts (A) and remove lower cover (B) if necessary.

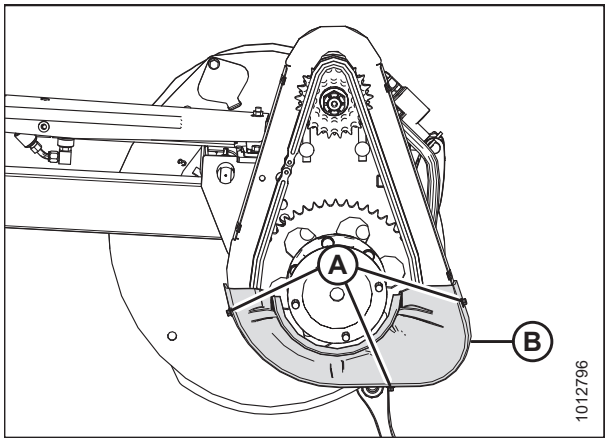

Figure 5.19: Lower Drive Cover

4. Apply a liberal amount of grease to the chain (A).

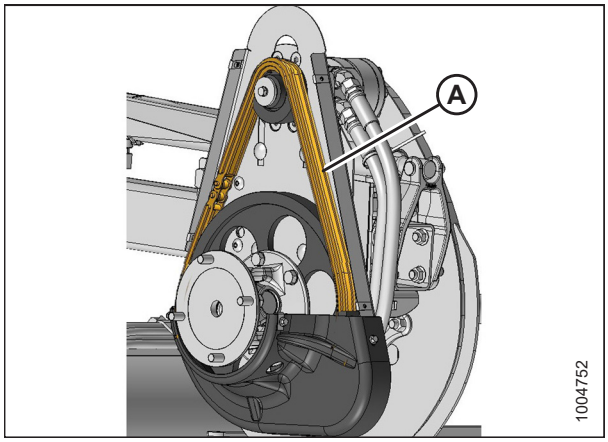

Figure 5.20: Drive Chain

5. Position lower drive cover (B) onto the reel drive (if previously removed), and secure with three bolts (A). Torque bolts to 12–13.2 Nm (9–10 lbf·ft).

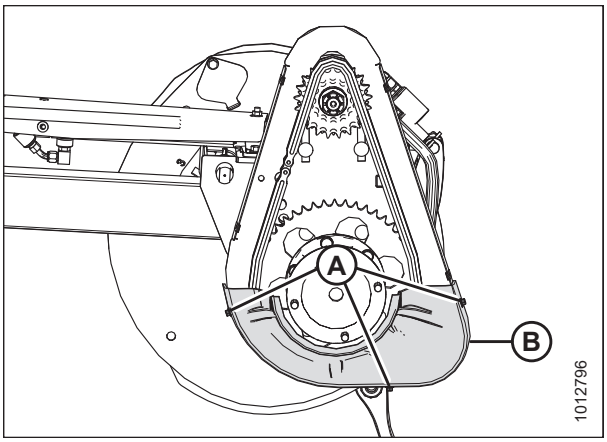

Figure 5.21: Lower Drive Cover – Double Reel

6. Position upper drive cover (B) onto the reel drive and lower cover (C), and secure with six bolts (A). Torque bolts to 12–13.2 Nm (9–10 lbf·ft).

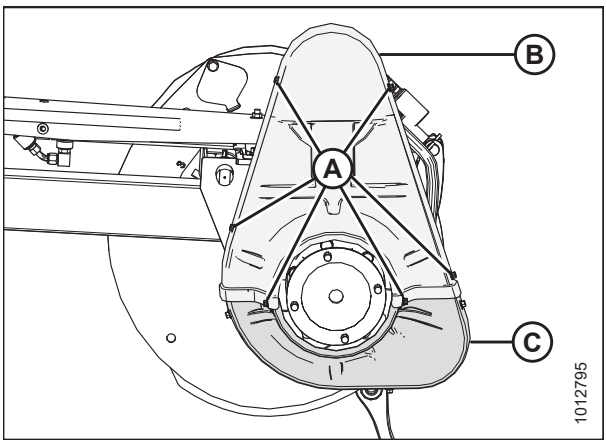

Figure 5.22: Drive Cover – Double Reel

Lubricating Auger Drive Chain

DANGER

To avoid injury or death from unexpected start-up of machine, always stop the engine and remove the key from the ignition before leaving the operator's seat for any reason.

Lubricate the auger drive chain every 100 hours. The auger drive chain can be lubricated with the float module attached to the combine, but it is easier with the float module detached.

The auger drive cover consists of an upper and lower cover, and a metal inspection panel. Only the metal inspection panel needs to be removed to grease the chain.

1. Remove four bolts (A) and the metal inspection panel (B).

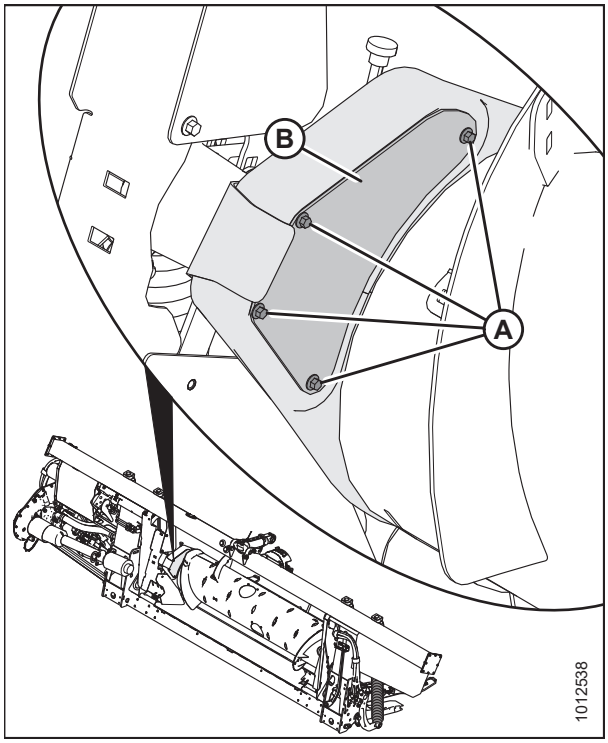

Figure 5.23: Auger Drive Inspection Panel

2. Apply a liberal amount of grease to the chain (A), drive sprocket (B), and idler sprocket (C).
3. Rotate the auger and apply grease to more areas of the chain, if necessary.

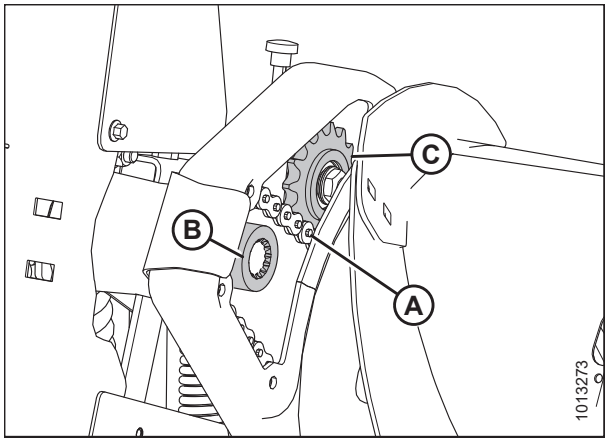

Figure 5.24: Auger Drive Chain

4. Reinstall metal inspection panel (B) and secure with four bolts (A).

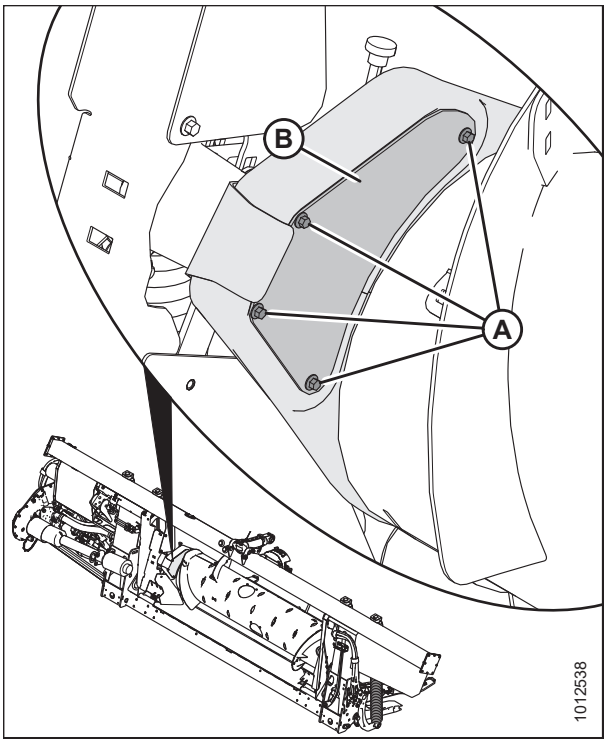

Figure 5.25: Auger Drive Inspection Panel

Lubricating Header Drive Gearbox

Checking Oil Level in Header Drive Gearbox

Check the header drive gearbox oil level every 100 hours.

WARNING

To avoid injury or death from unexpected start-up of machine, always stop the engine and remove the key from the ignition before leaving the operator's seat for any reason.

1. Lower the header to the ground and ensure the gearbox is in working position.
2. Shut down the engine, and remove the key from the ignition.
3. Remove oil level plug (A) and check that the oil level is up to the bottom of the hole.
4. Reinstall oil level plug (A).
5. Add oil if required. For instructions, refer to *Adding Oil to Header Drive Gearbox, page 452*.

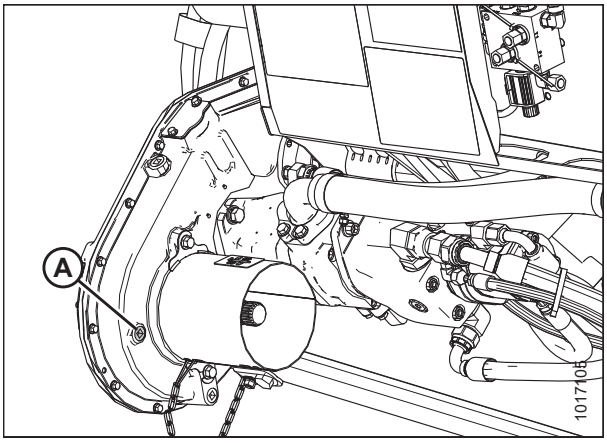

Figure 5.26: Header Drive Gearbox

Adding Oil to Header Drive Gearbox

WARNING

To avoid injury or death from unexpected start-up of machine, always stop the engine and remove the key from the ignition before leaving the operator's seat for any reason.

1. Lower the cutterbar to the ground, and ensure the gearbox is in working position.
2. Shut down the engine, and remove the key from the ignition.
3. Remove filler plug (B) and oil level plug (A).
4. Add oil into filler plug (B) until it runs out of oil level plug hole (A). Refer to the inside back cover for recommended fluids and lubricants.
5. Replace oil level plug (A) and filler plug (B).

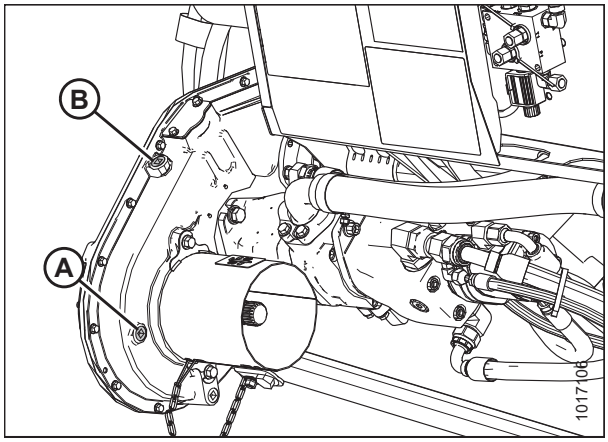

Figure 5.27: Header Drive Gearbox

Changing Oil in Header Drive Gearbox

Change the header drive gearbox oil after the first 50 hours of operation and every 1000 hours (or 3 years) thereafter.

WARNING

To avoid injury or death from unexpected start-up of machine, always stop the engine and remove the key from the ignition before leaving the operator's seat for any reason.

1. Start engine.
2. Engage the header to warm up the oil.
3. Raise or lower the header to position oil drain plug (A) at its lowest point.
4. Shut down the engine, and remove the key from the ignition.
5. Place a suitably sized container (approximately 4 liters [1 US gal]) underneath the gearbox drain to collect the oil.
6. Remove oil drain plug (A) and filler plug (C), and allow the oil to drain.
7. Replace oil drain plug (A) and remove oil level plug (B).
8. Add oil through filler plug (C) until it runs out of oil level hole (B). Refer to this manual's inside back cover for recommended lubricants.

   NOTE:

   The header drive gearbox holds approximately 2.5 liters (2.6 quarts) of oil.
9. Replace oil level plug (B) and filler plug (C).

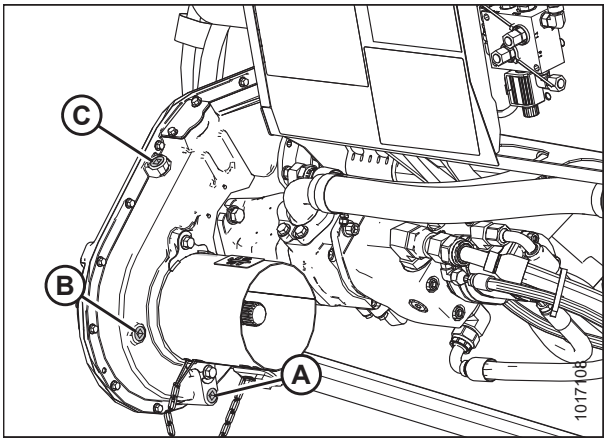

Figure 5.28: Header Drive Gearbox

5.4 Hydraulics

The FM100 Float Module's hydraulic system drives the float module feed draper, header drapers, and knife drives. The combine's hydraulic system drives the reel hydraulics.

The float module frame acts as an oil reservoir. Refer to inside back cover for oil requirements.

5.4.1 Checking Oil Level in Hydraulic Reservoir

Check the hydraulic oil level in the reservoir every 25 hours.

1. Check the oil level using lower sight (A) and upper sight (B) with the cutterbar just touching the ground and with the center-link retracted.

   NOTE:

   Check the level when the oil is cold.

   NOTE:

   For extremely hilly terrain, a hillside extension kit can be installed. Refer to *6.1.1 Hillside Extension Kit, page 623*.

2. Ensure the oil is at the appropriate level for the terrain as follows:

   - **Hilly terrain:** Maintain level so lower sight (A) is full, and upper sight (B) is up to one-half filled.
   - **Normal terrain:** Maintain level so lower sight (A) is one-half full, and upper sight (B) is empty.

   NOTE:

   It may be necessary to slightly reduce the oil level when ambient temperatures are above 35°C (95°F) to prevent overflow at the breather when normal operating temperatures are reached.

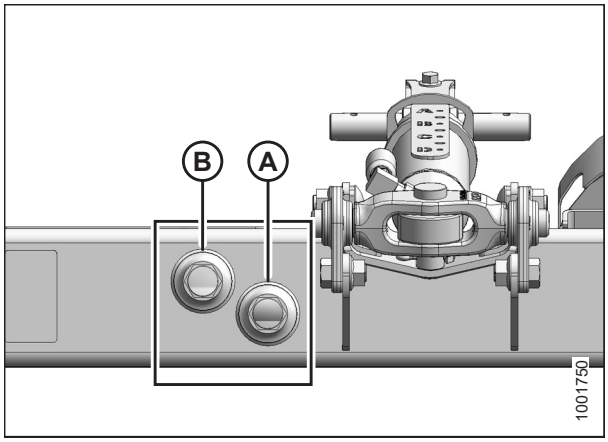

Figure 5.29: Oil Level Sight Glass

5.4.2 Adding Oil to Hydraulic Reservoir

Follow this procedure to top up the oil in the hydraulic reservoir. To change the hydraulic oil, refer to *5.4.3 Changing Oil in Hydraulic Reservoir, page 455*.

WARNING

To avoid injury or death from unexpected start-up of machine, always stop the engine and remove the key from the ignition before leaving the operator's seat for any reason.

1. Shut down the engine, and remove the key from the ignition.
2. Clean any dirt or debris from filler cap (A).

CAUTION

Oil reservoir can have up to 10 psi of pressure, remove the cap slowly.

3. Loosen and remove filler cap (A) by turning it counterclockwise.
4. Add warm oil (approximately 21°C [70°F]) and fill to the required level. Refer to this manual's inside back cover for oil type and specification.

   IMPORTANT:

   Warm oil will flow through the screen better than cold oil. Do **NOT** remove the screen.
5. Reinstall filler cap (A).
6. Recheck oil level. For instructions, refer to *5.4.1 Checking Oil Level in Hydraulic Reservoir, page 454*.

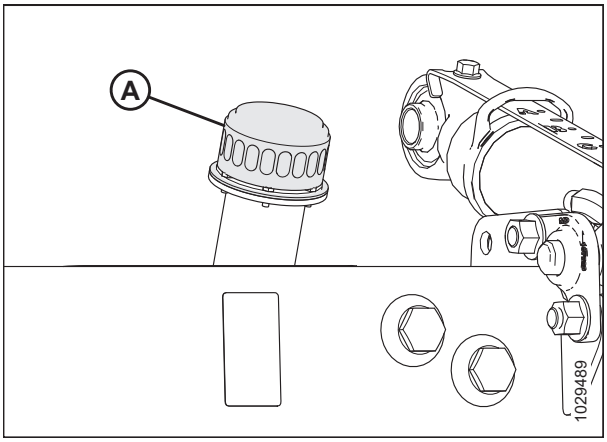

Figure 5.30: Oil Reservoir Filler Cap

5.4.3 Changing Oil in Hydraulic Reservoir

Change the hydraulic oil in the reservoir every 1000 hours or 3 years (whichever comes first).

WARNING

To avoid injury or death from unexpected start-up of machine, always stop the engine and remove the key from the ignition before leaving the operator's seat for any reason.

1. Start the engine. For instructions, refer to the combine operator's manual.
2. Engage the header to warm up the oil.
3. Shut down the engine, and remove the key from the ignition.

4. Place a suitably sized container (at least 40 liters [10 gallons]) under each of the two oil drain plugs (A) located at the back on each side of the frame.

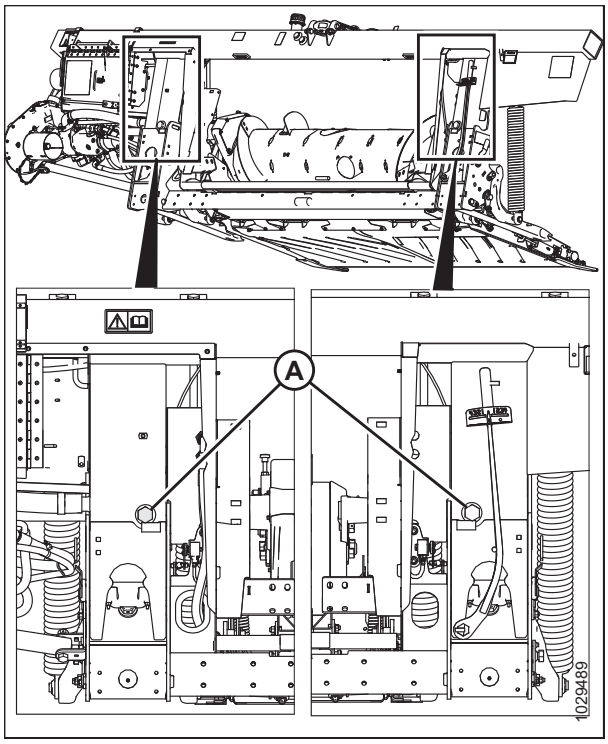

Figure 5.31: Reservoir Drain

5. Clean any dirt or debris from the filler cap (A).

CAUTION

Oil reservoir can have up to 10 psi of pressure, remove the cap slowly.

6. Loosen and remove the filler cap (A) by turning it counterclockwise.
7. Remove the oil drain plugs (A) with a 1 1/2 in. hex socket and allow the oil to drain.
8. Replace the oil drain plugs (A) when reservoir is empty.
9. Change the oil filter if required. For instructions, refer to *5.4.4 Changing Oil Filter, page 457*.
10. Add approximately 85 liters (22.5 gallons) of oil to the reservoir. For instructions, refer to *5.4.2 Adding Oil to Hydraulic Reservoir, page 455*.

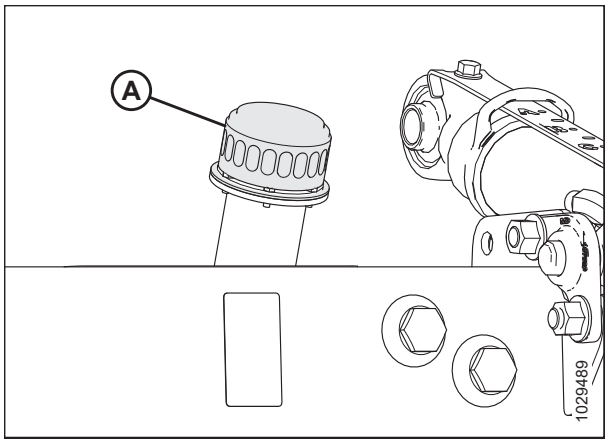

Figure 5.32: Oil Reservoir Filler Cap

5.4.4 Changing Oil Filter

Change the oil filter after the first 50 hours of operation and every 250 hours thereafter.

Obtain filter (MD #202986) from your MacDon Dealer.

WARNING

To avoid injury or death from unexpected start-up of machine, always stop the engine and remove the key from the ignition before leaving the operator's seat for any reason.

1. Clean around the mating surfaces of the filter (B) and manifold (A).

   NOTE:

   Cover opened in illustration at right to show manifold (A).

2. Place a suitably sized container (approximately 1 liter [0.26 gallons]) under the oil drain spout (C) to collect oil runoff.

3. Remove the spin-off filter (B) and clean the exposed filter port in the manifold (A).

4. Apply a thin film of clean oil to the O-ring provided with the new filter.

5. Turn the new filter into the manifold (A) until the O-ring contacts the mating surface. Tighten the filter an additional 1/2 to 3/4 turn by hand.

   IMPORTANT:

   Do **NOT** use a filter wrench to install the new filter. Overtightening can damage the O-ring and filter.

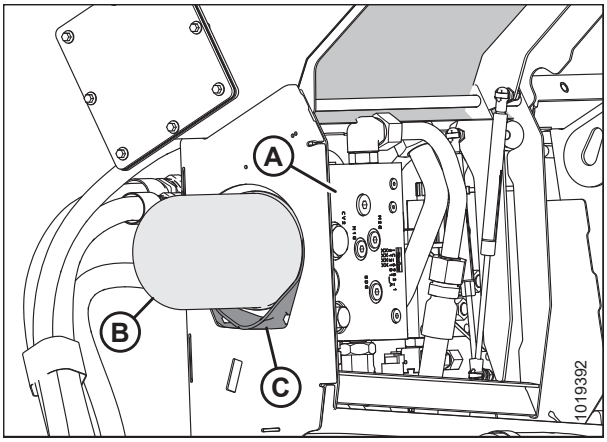

Figure 5.33: FM100 Hydraulics

5.5 Electrical System

The electrical system for the header is powered by the windrower. The header has various lights and sensors that require power.

5.5.1 Replacing Light Bulbs

DANGER

To avoid bodily injury or death from unexpected startup of machine, always stop the engine and remove the key before making adjustments to the machine.

1. Shut down the engine, and remove the key from the ignition.
2. Use a Phillips screwdriver to remove screws (A) from the fixture, and remove the plastic lens. Retain screws (A).
3. Replace the bulb, and reinstall the plastic lens and screws.

   NOTE:

   Use trade #1156 bulb for amber transport lights and #1157 for the red tail light (Slow Speed Transport option).

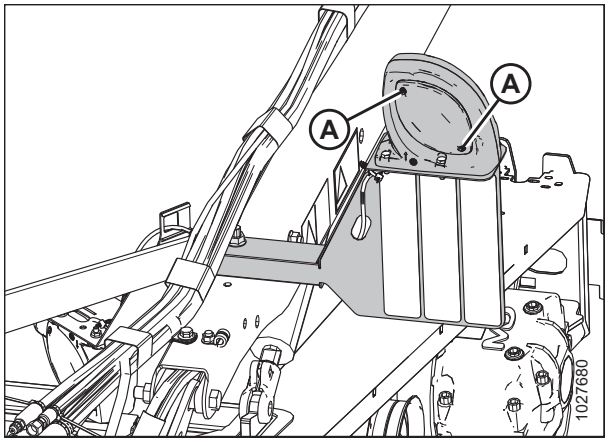

Figure 5.34: Left Transport Light

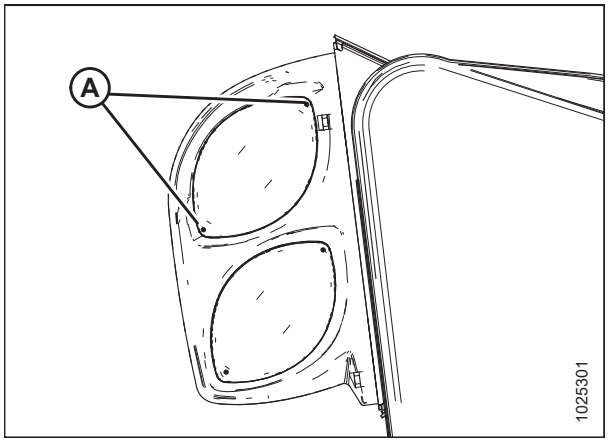

Figure 5.35: Optional Slow Speed Transport – Red and Amber Lights

5.6 Header Drive

The header drive consists of a driveline from the combine to the FM100 Float Module gearbox that drives the feed auger and hydraulic pumps. The pumps provide hydraulic power to the drapers, knives, and optional equipment.

5.6.1 Removing Driveline

WARNING

To avoid injury or death from unexpected start-up of machine, always stop the engine and remove the key from the ignition before leaving the operator's seat for any reason.

NOTE:

The driveline normally remains attached to the float module and is stored on the support bracket provided when not in use.

1. Shut down the combine, and remove the key from the ignition.
2. If the float module is attached to the combine, remove the driveline from the combine by pulling the quick disconnect collar to release the driveline yoke at the combine shaft.
3. Remove two nuts (A) securing shield (B) to the gearbox.
4. Slide shield (B) over the driveline shield to expose the quick disconnect on the gearbox. Do **NOT** disconnect tether (C).
5. Pull the quick disconnect collar to release the driveline yoke, and pull the driveline off the gearbox shaft.
6. Slide shield (B) off the driveline.

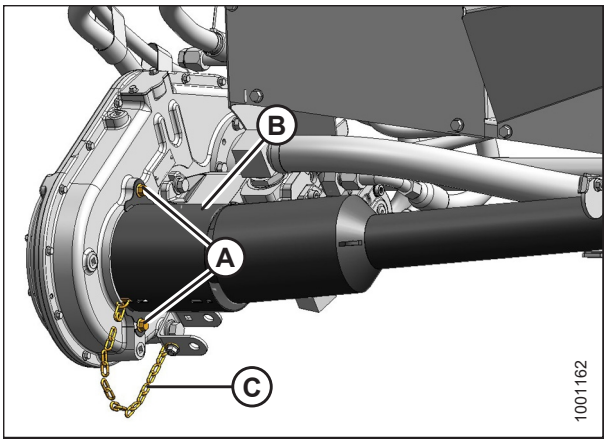

Figure 5.36: Float Module End of Driveline

7. Pull driveline collar (A) away from power take-off (PTO) support (B). Slide yoke (C) off support bracket (B), and release collar (A).

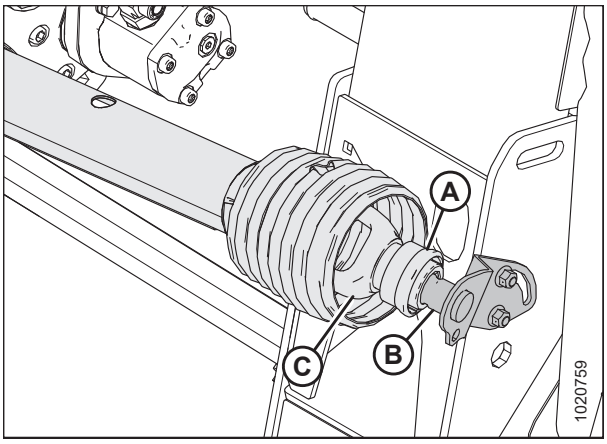

Figure 5.37: Combine End of Driveline

5.6.2 Installing Driveline

DANGER

To avoid bodily injury or death from unexpected start-up of machine, always stop engine and remove key from ignition before leaving operator's seat for any reason.

IMPORTANT:

If the combine output shaft splines match the float module input shaft splines, ensure the driveline is installed with the longer guard at the float module gearbox end.

IMPORTANT:

Ensure the driveline length corresponds with the length specifications for your specific equipment. Refer to *2.2 Specifications, page 25*.

1. Position the combine end of driveline (A) onto storage support (B). Pull back collar (C) on the driveline and slide the driveline onto the support until it locks in place. Release collar (C).
2. For drivelines equipped with safety chains, attach chain (D) at the combine end to driveline storage support (B).

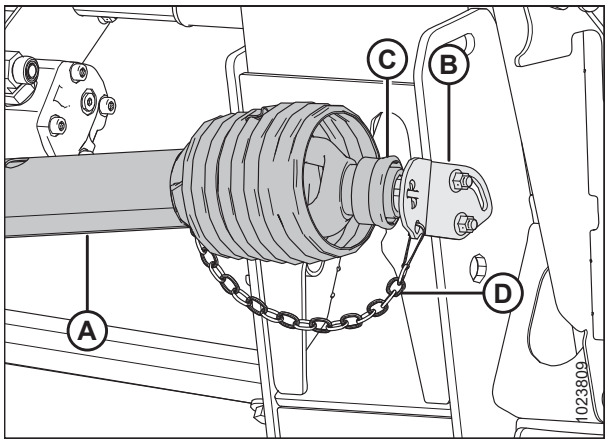

Figure 5.38: Combine End of Driveline

3. Slide shield (A) over driveline (B).
4. Position the driveline quick disconnect onto the float module gearbox shaft, pull back the collar, and slide it onto the shaft until it locks in place. Release the collar.
5. Position shield (A) on the gearbox and secure with bolts (C).
6. For drivelines equipped with safety chains, attach chain (D) at the module end to chain (E) on the shield.

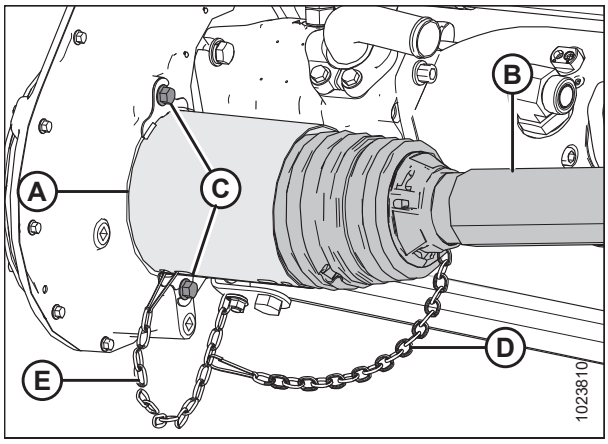

Figure 5.39: Float Module End of Driveline

5.6.3 Removing Driveline Guard

The main driveline guard must remain attached to the driveline during operation, but it can be removed for maintenance purposes.

WARNING

To avoid injury or death from unexpected start-up of machine, always stop the engine and remove the key from the ignition before leaving the operator's seat for any reason.

NOTE:

The driveline does **NOT** need to be removed from the float module in order to remove the driveline guard.

1. Shut down the combine, and remove the key from the ignition.
2. Pull driveline collar (A) away from power take-off (PTO) support (B). Slide yoke (C) off support bracket (B), and release collar (A).

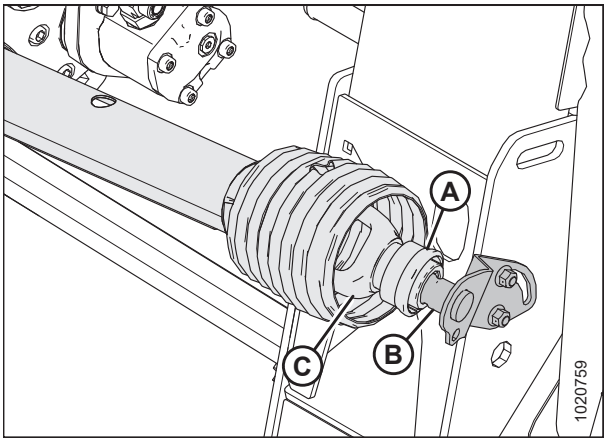

Figure 5.40: Combine End of Driveline

3. Lift the combine end of driveline (A) from the hook, and extend the driveline until it separates. Hold the float module end of driveline (B) to prevent it from dropping and hitting the ground.

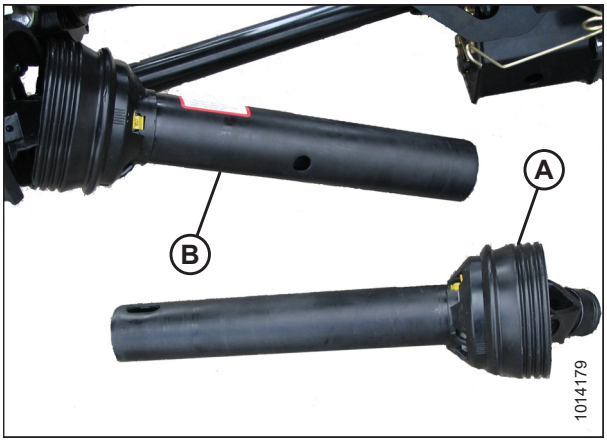

Figure 5.41: Separated Driveline

4. Use a slotted screwdriver to release grease fitting/lock (A).

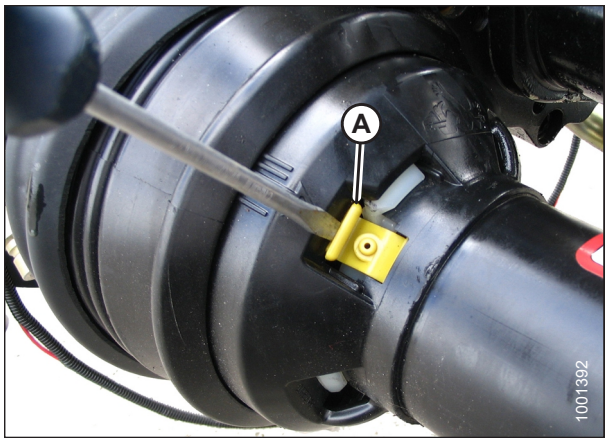

Figure 5.42: Driveline Guard

5. Rotate driveline guard locking ring (A) counterclockwise using a screwdriver until lugs (B) line up with the slots in the guard.
6. Pull the guard off the driveline.

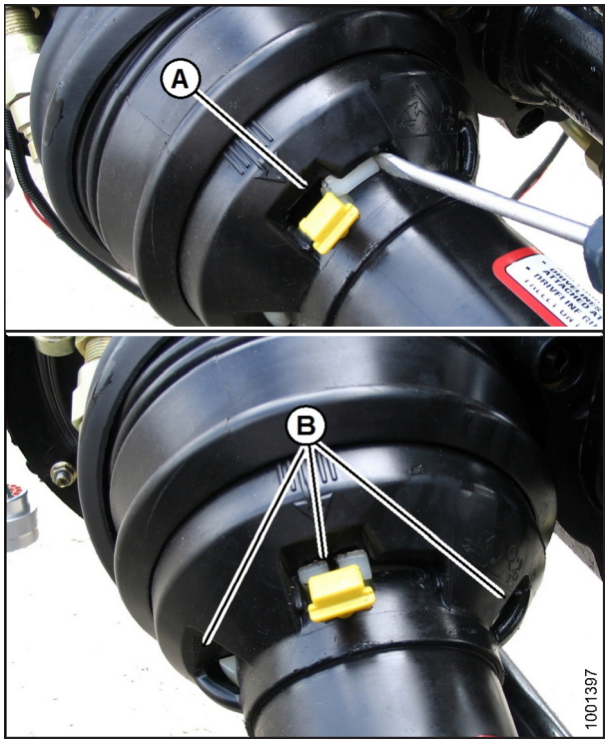

Figure 5.43: Driveline Guard

5.6.4 Installing Driveline Guard

1. Slide the guard onto the driveline, and line up the slotted lug on locking ring (A) with arrow (B) on the guard.

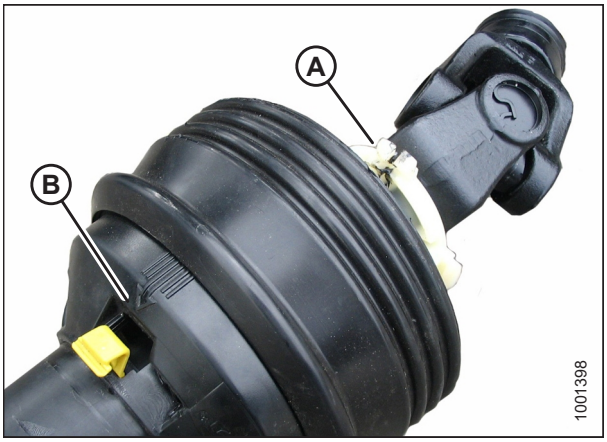

Figure 5.44: Driveline Guard

2. Push the guard onto the ring until the locking ring is visible in slots (A).

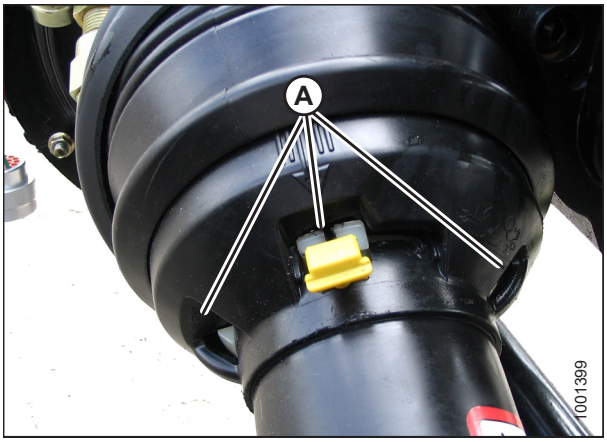

Figure 5.45: Driveline Guard

3. Use a slotted screwdriver to rotate ring (A) clockwise and lock ring in guard.

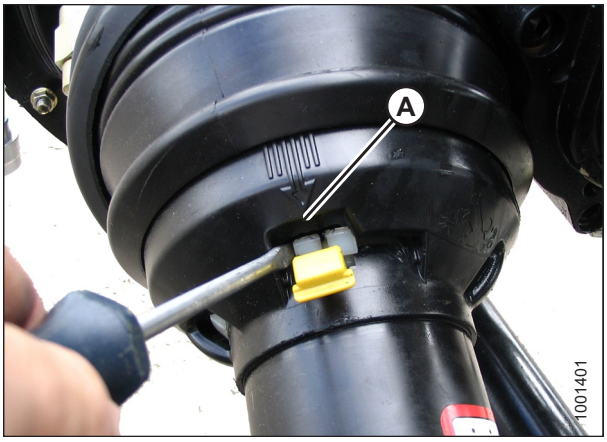

Figure 5.46: Driveline Guard

4. Push grease fitting (A) back into the guard.

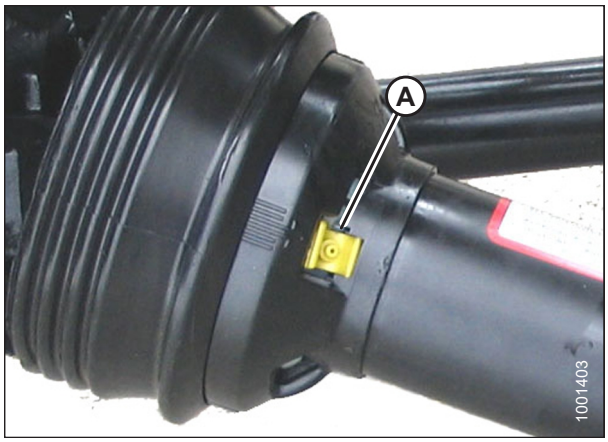

Figure 5.47: Driveline Guard

5. Assemble the driveline.

   IMPORTANT:

   The splines are keyed to align the universals. Align weld (A) with missing spline (B) when assembling. Failure to align the halves of the shaft can cause excessive vibration and feed auger/gearbox failures.

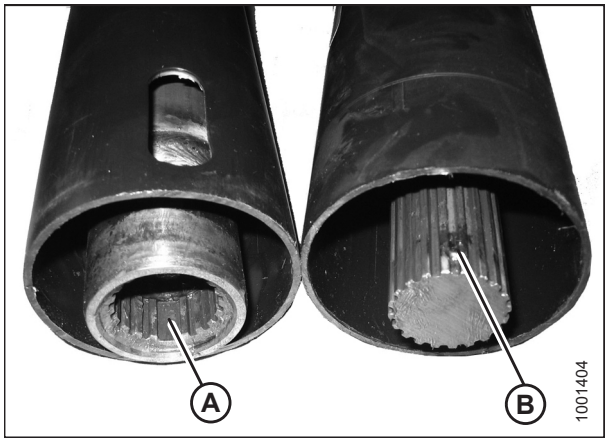

Figure 5.48: Driveline

6. Position the combine end of driveline (A) on power take-off (PTO) storage support (B). Pull back collar (C) on the driveline and slide driveline onto the support until driveline yoke (D) locks onto support. Release collar (C).

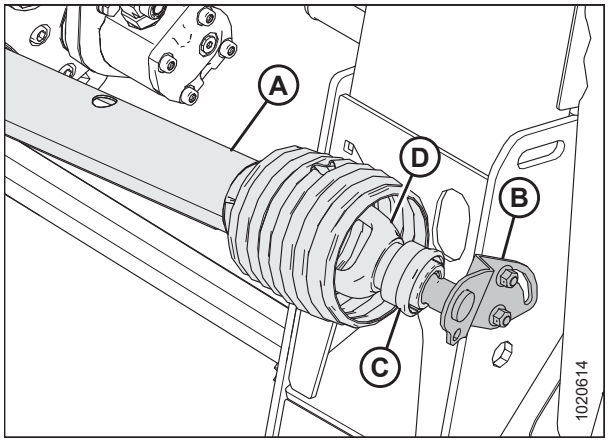

Figure 5.49: Combine End of Driveline

5.6.5 Adjusting Gearbox Drive Chain Tension

The gearbox drive chain tension is factory-set, but tension adjustments are required after the first 50 hours, then every 500 hours or annually (whichever comes first). The gearbox drive chain, located inside the gearbox, requires no other regular maintenance.

WARNING

To avoid injury or death from unexpected start-up of machine, always stop the engine and remove the key from the ignition before leaving the operator's seat for any reason.

1. Lower the header.
2. Shut down the engine, and remove the key from the ignition.
3. Remove two bolts and the chain adjusting cover (A). Ensure there is no gasket (B) damage.
4. Remove the retainer plate (C).
5. Tighten bolt (D) to 6.8 Nm (60 lbf·in).
6. Refer to Table *5.1, page 465* and back off (loosen) bolt (D) based on your gearbox configuration.

   NOTE:

   A properly tensioned chain has 10–14 mm (3/8–9/16 in.) of deflection at its midpoint.
7. Reinstall the retainer plate (C).
8. Reinstall the chain adjusting cover (A) and gasket (B). Torque hardware to 9.5 Nm (84 lbf·in).

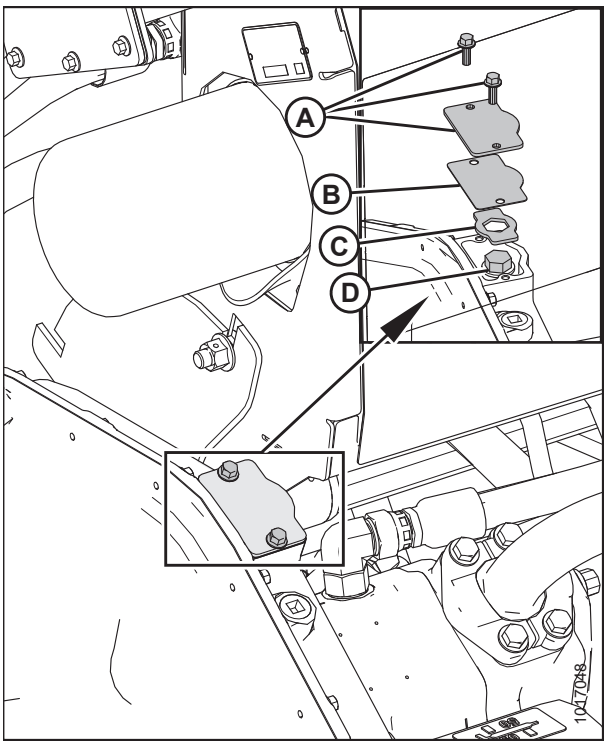

Figure 5.50: Chain Tensioner

Table 5.1 Adjusting Bolt Tightness on Configured Gearboxes

Gearbox Configuration	Gear Ratios	Back Off Amounts
CLAAS	22/38 sprocket ratio, 74 pitch chain	1 turn
Case, New Holland, and AGCO (Challenger, Gleaner, Massey Ferguson)	29/38 sprocket ratio, 78 pitch chain	1 turn
AGCO IDEAL™ Series	29/38 sprocket ratio, 78 pitch chain	1 turn
John Deere	37/38 sprocket ratio, 80 pitch chain	2-1/2 turn

5.7 Auger

The FM100 Float Module auger feeds the cut crop from the draper decks into the combine feeder house.

5.7.1 Adjusting Auger to Pan Clearance

WARNING

To avoid injury or death from unexpected start-up of machine, always stop the engine and remove the key from the ignition before leaving the operator's seat for any reason.

IMPORTANT:

Maintain an appropriate distance between the auger and the auger pan. Too little clearance may result in the fingers or flighting contacting and damaging the feed draper or pan when operating the header at certain angles. Look for evidence of contact when greasing the float module.

1. Extend the center-link to the steepest header angle, and position the header 150–254 mm (6–10 in.) off the ground.
2. Shut down the engine, and remove the key from the ignition.
3. Ensure the float lock linkage is on the down stops (washer [A] cannot be moved) at both locations.

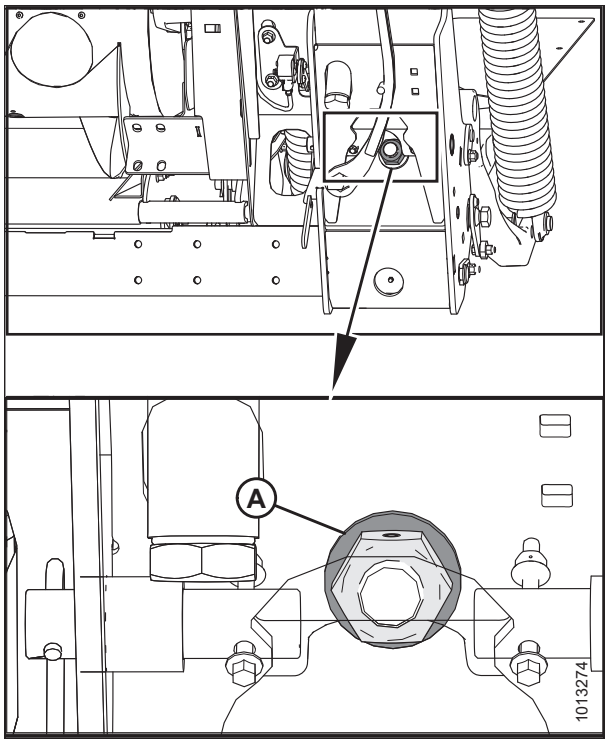

Figure 5.51: Float Lock

4. Before adjusting the auger to pan clearance, check the auger float position to determine how much clearance is required:

   - If bolt head (A) is closest to floating symbol (B), the auger is in the floating position.

   IMPORTANT:

   Make sure bolts (A) are set at the same location on both ends of the header to prevent damaging the machine during operation.

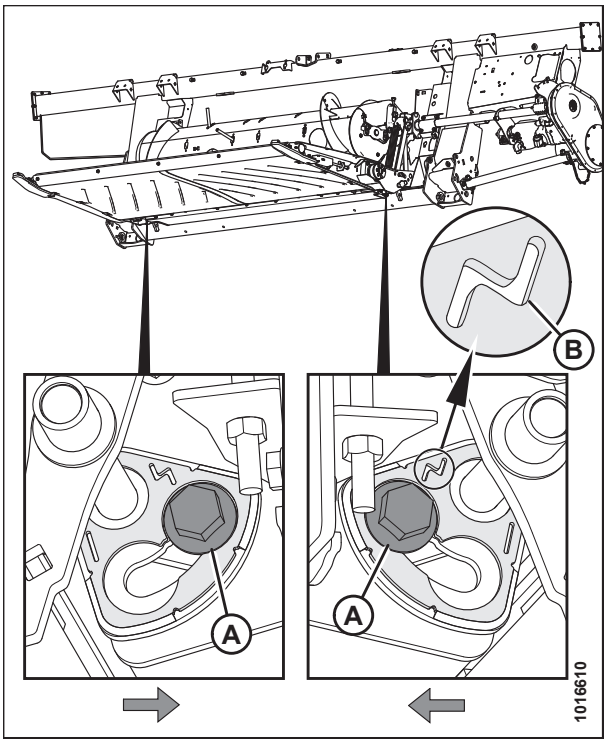

Figure 5.52: Floating Position

   - If bolt head (A) is closest to fixed symbol (B), the auger is in the fixed position.

   IMPORTANT:

   Make sure bolts (A) are set at the same location on both ends of the header to prevent damaging the machine during operation.

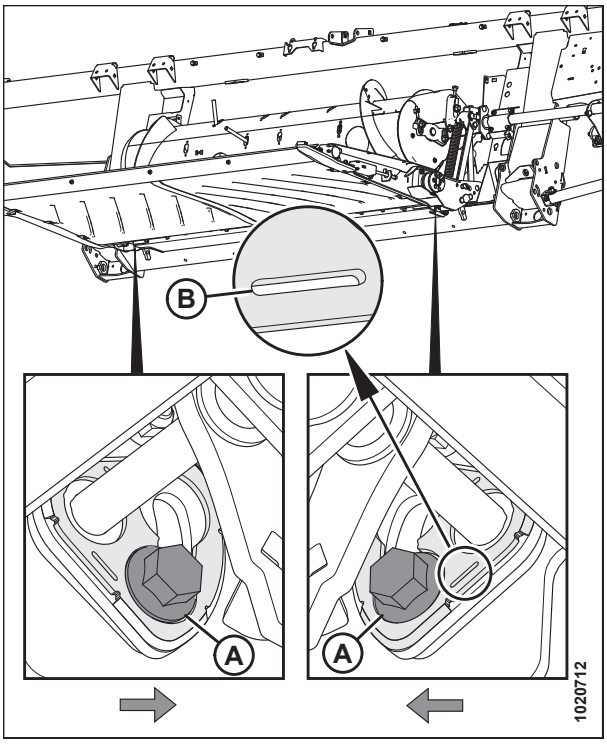

Figure 5.53: Fixed Position

5. Loosen two nuts (B) and rotate the auger to position the flighting over the feed pan.
6. Turn bolt (A) clockwise to increase clearance (C); turn bolt (A) counterclockwise to decrease clearance (C).
   - If the feed auger is in the fixed position, set clearance to 22–26 mm (7/8–1.0 in.).
   - If the feed auger is in the floating position, set clearance to 11–15 mm (7/16–5/8 in.).

   NOTE:

   The clearance increases between 25–40 mm (1–1 1/2 in.) when the center-link is fully retracted.
7. Repeat Steps *5, page 468* and *6, page 468* for the opposite end of the auger.

   IMPORTANT:

   Adjusting one side of the auger can affect the other side. Always double-check both sides of the auger after making final adjustments.
8. Tighten nuts (B) on both ends of the feed auger. Torque the nuts to 93–99 Nm (68–73 lbf·ft).
9. Rotate the drum and double-check clearances.

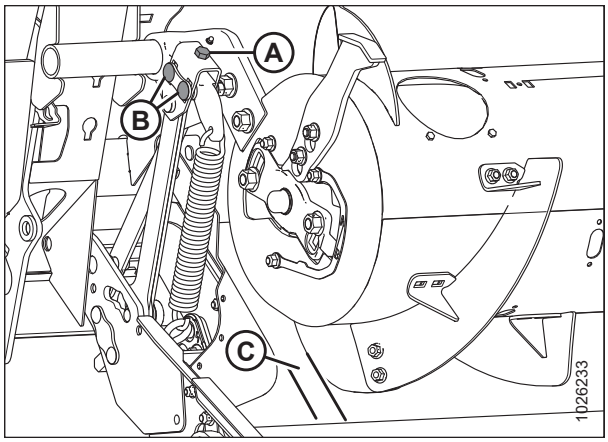

Figure 5.54: Auger Clearance

5.7.2 Checking Auger Drive Chain Tension

The auger is chain-driven by the float module drive system sprocket attached to the side of the auger.

DANGER

To avoid bodily injury or death from unexpected start-up or fall of a raised machine, always stop engine and remove key before leaving the operator's seat, and always engage safety props before going under the machine for any reason.

1. Lower the header fully.
2. Raise the reel fully.
3. Engage the reel safety props. For instructions, refer to *Engaging Reel Safety Props, page 35*.
4. Shut down the engine, and remove the key from the ignition.

   NOTE:

   Adjust gearbox chain tension before checking and adjusting the auger drive chain tension. For instructions, refer to *5.6.5 Adjusting Gearbox Drive Chain Tension, page 465*.

5. Rotate the auger (A) by hand in reverse direction, until it cannot turn anymore.
6. Mark a line (B) across the drum and cover.

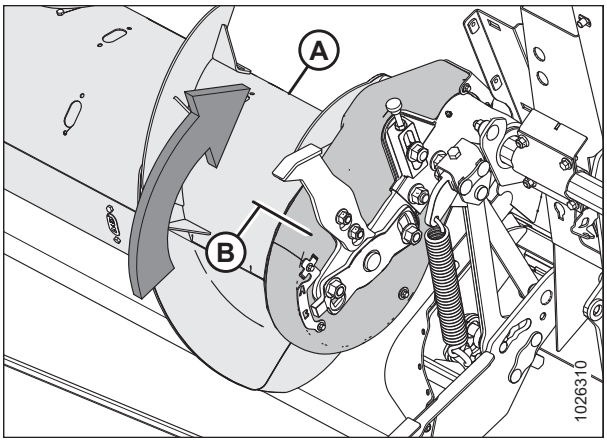

Figure 5.55: Auger Drive

7. Rotate the auger (A) by hand, in forward direction, until it cannot turn anymore and mark a line (C) across the drum and cover.
8. Measure the distance between the two lines (B) and (C).

   For a new chain:

   - If the difference between (B) and (C) is 1–4 mm (0.04–0.16 in.), no adjustment is required.
   - If the difference between (B) and (C) is greater than 4 mm (0.16 in.), the auger drive chain tension needs adjusting. For instructions, refer to *5.7.3 Adjusting Auger Drive Chain Tension, page 470*.

   For a used chain:

   - If the difference between (B) and (C) is 3–8 mm (0.12–0.31 in.), no adjustment is required.
   - If the difference between (B) and (C) is greater than 8 mm (0.31 in.), the auger drive chain tension needs adjusting. For instructions, refer to *5.7.3 Adjusting Auger Drive Chain Tension, page 470*.
   - If the difference between (B) and (C) is less than 3 mm (0.12 in.), the auger drive chain needs adjusting. For instructions, refer to *5.7.3 Adjusting Auger Drive Chain Tension, page 470*.

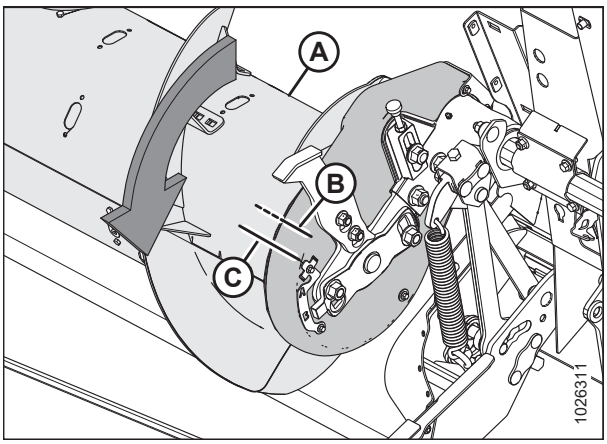

Figure 5.56: Auger Drive

5.7.3 Adjusting Auger Drive Chain Tension

The auger is chain-driven by the float module drive system sprocket attached to the side of the auger.

WARNING

To avoid injury or death from unexpected start-up of machine, always stop the engine and remove the key from the ignition before leaving the operator's seat for any reason.

1. Shut down the engine, and remove the key from the ignition.
2. Detach the header from the combine. For instructions, refer to *4 Header Attachment/Detachment, page 371*.
3. Loosen jam nut (B).
4. Loosen idler nut (A) slightly to allow idler to move by hand.
5. Rotate auger in reverse to take up slack in upper strand of chain.
6. Turn adjuster thumbscrew (C) clockwise to move the idler sprocket until there is 4 mm (5/32 in.) deflection at the midspan of the auger drive chain.

   NOTE:

   Do **NOT** overtighten.
7. Tighten the idler nut (A) and torque to 258–271 Nm (190–200 lbf·ft).

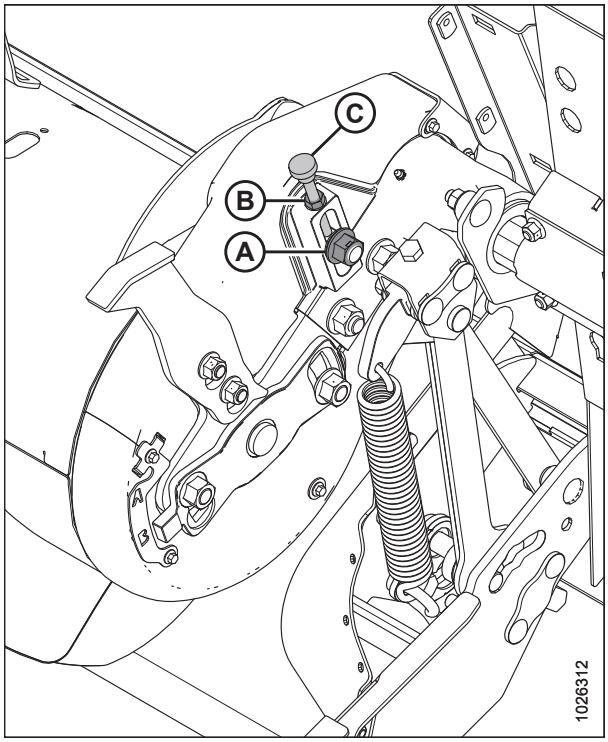

Figure 5.57: Left Side of Auger Drive

5.7.4 Installing Auger Drive Chain

NOTE:

Illustrations show the left side of the auger.

1. Place drive chain (B) over the sprocket on the drive side of auger (A).

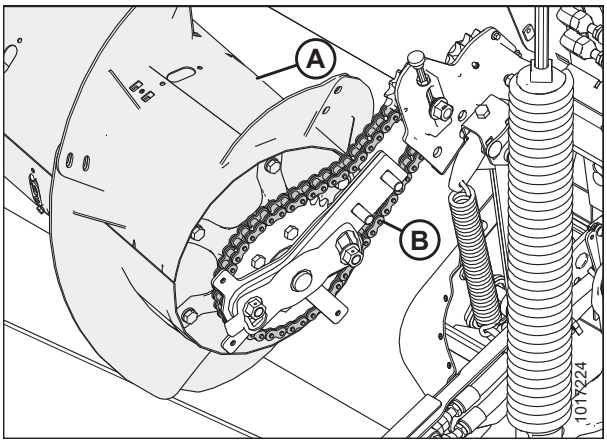

Figure 5.58: Auger Drive

2. Place drive sprocket (A) into chain (B) and align the sprocket onto the shaft.

   NOTE:

   Shoulder of drive sprocket (A) should face the auger.

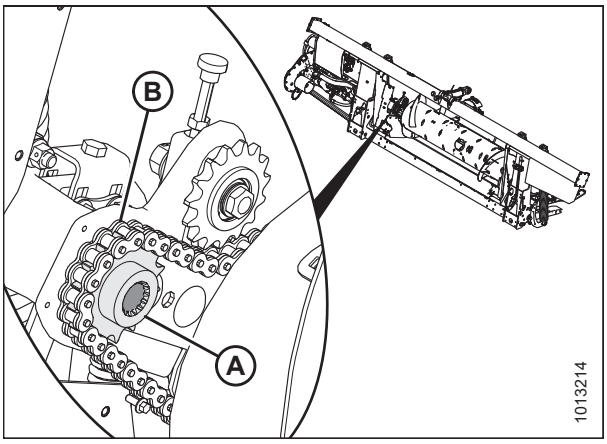

Figure 5.59: Auger Drive

3. Slide the auger drum assembly toward the casting, and then reinstall two bolts and nuts (A).
4. Remove the blocks from under the auger.

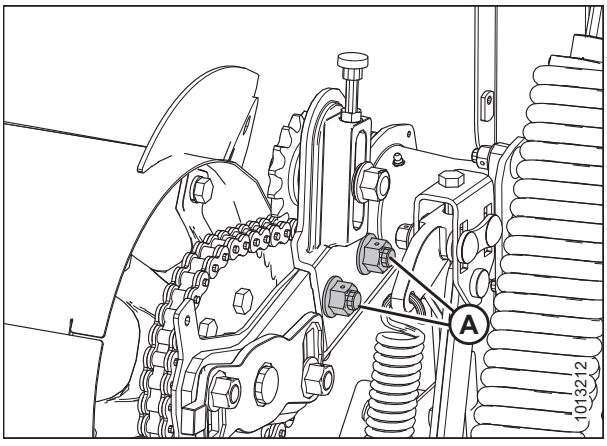

Figure 5.60: Auger Drive

5. Rotate the auger in reverse to take up the slack in the lower strand of the chain.

   IMPORTANT:

   Do **NOT** loosen thin nut (C) on the inboard side of the idler sprocket spindle.

6. Turn adjuster thumbscrew (D) clockwise to move idler sprocket (B) until it is **FINGER TIGHT ONLY.**

   IMPORTANT:

   Do **NOT** overtighten.

7. Tighten idler nut (A) and torque to 258–271 Nm (190–200 lbf·ft).

8. Tighten jam nut (A).

9. Apply medium-strength threadlocker (Loctite® 243 or equivalent) to threads of screw (B).

10. Install washer (C) and secure it with screw (B).

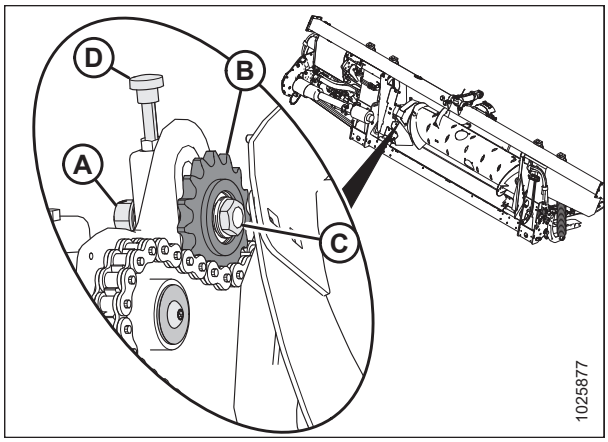

Figure 5.61: Auger Drive

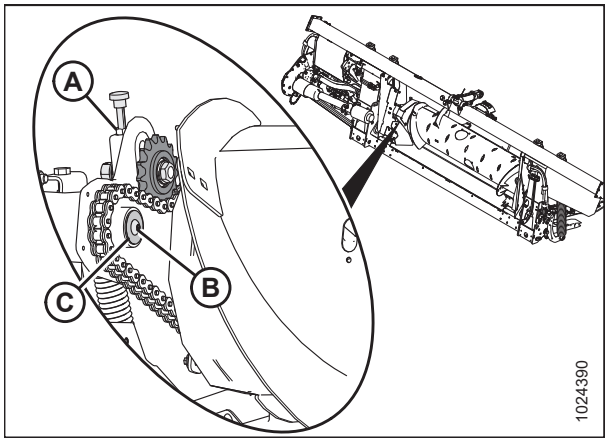

Figure 5.62: Auger Drive

11. Position bottom cover (H) and secure with bolt and washer (J).
12. Position top cover (G). Secure top and bottom covers with clamp/indicator (D) and bolts (C).
13. Install inspection panel (B) and secure with four bolts (A). Tighten bolts (A) and torque to 2.7–4.1 Nm (24–36 lbf·in).
14. Install cover retainer (F) and secure with two bolts (E).

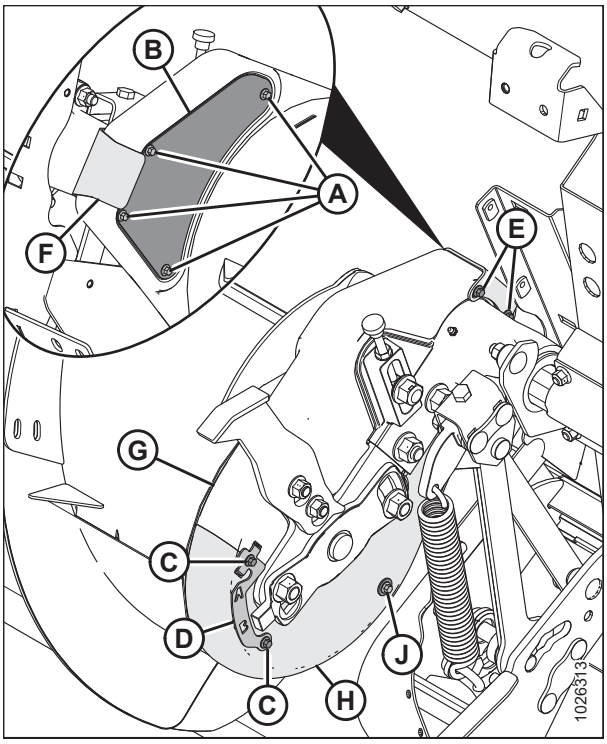

Figure 5.63: Auger

5.7.5 Auger Fingers

The FM100 auger uses retracting tines to feed the crop into the combine feeder house. Some conditions may require the removal or installation of fingers for optimal crop feeding. Replace any worn or damaged fingers.

IMPORTANT:

Only install hollow fingers in a FM100. The use of solid fingers will cause severe damage to the machine.

Removing Feed Auger Fingers

DANGER

To avoid bodily injury or death from unexpected start-up or fall of a raised machine, always stop engine and remove key before leaving the operator's seat, and always engage safety props before going under the machine for any reason.

1. Start the engine. For instructions, refer to the combine operator's manual.
2. Raise the reel fully.
3. Shut down the engine, and remove the key from the ignition.
4. Engage the reel safety props. For instructions, refer to *Engaging Reel Safety Props, page 35*.
5. Remove bolts (A) and access cover (B) closest to the finger you are removing. Retain parts for reinstallation.

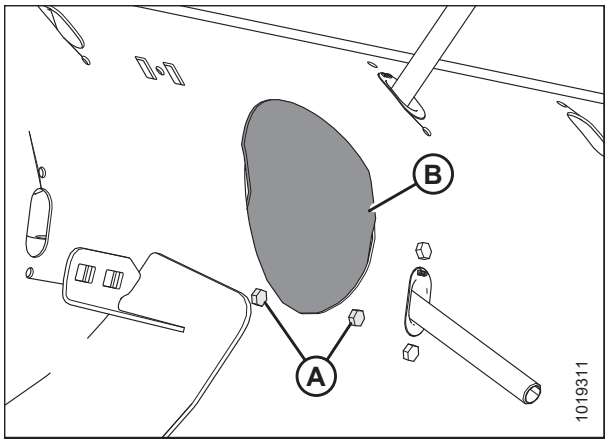

Figure 5.64: Auger Access Hole Cover

6. Remove hairpin (A) and pull finger (B) out of finger holder (C) from inside the auger. Remove the finger from the auger by pulling it out through plastic guide (D).

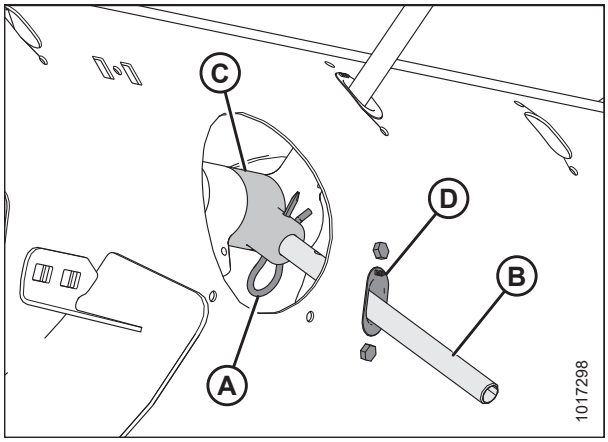

Figure 5.65: Auger Finger

7. Remove bolts (A) and tee nuts securing plastic guide (B) to the auger, and remove the guide from inside the auger.

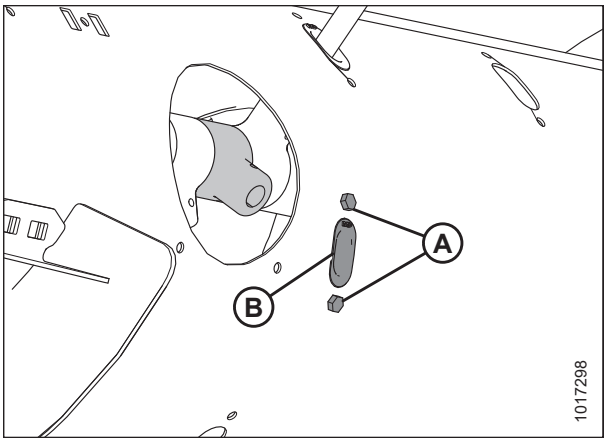

Figure 5.66: Auger Finger Hole

8. Coat bolts (B) with medium-strength threadlocker (Loctite® 243 or equivalent), and then position plug (A) into the hole from inside the auger. Secure with two M6 hex head bolts (B) and tee nuts. Torque to 9 Nm (80 lbf·in).

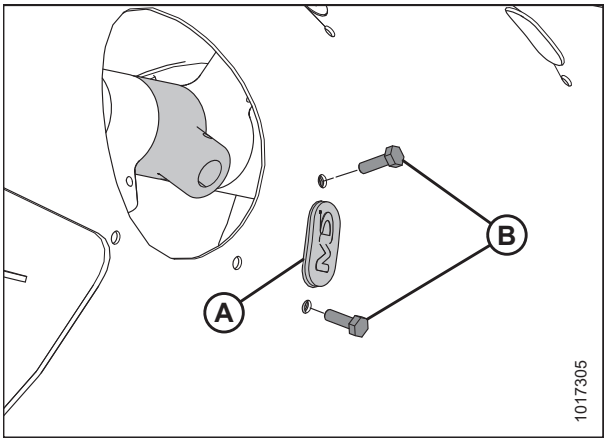

Figure 5.67: Plug

9. Coat bolts (A) with medium-strength threadlocker (Loctite® 243 or equivalent) and reinstall access cover (B). Secure the access cover in place with bolts (A). Torque bolts to 9 Nm (80 lbf·in).

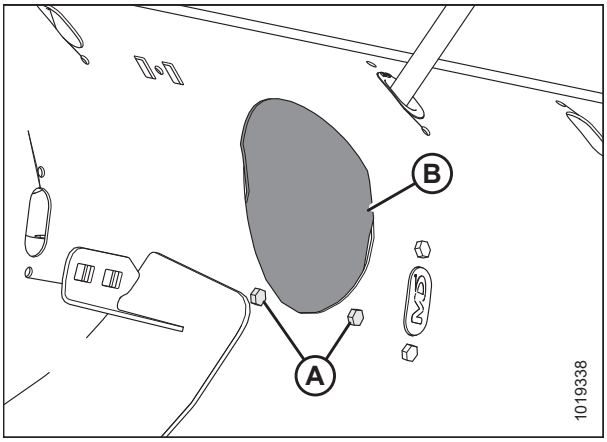

Figure 5.68: Auger Access Hole Cover

Installing Feed Auger Fingers

DANGER

To avoid bodily injury or death from unexpected start-up or fall of a raised machine, always stop engine and remove key before leaving the operator's seat, and always engage safety props before going under the machine for any reason.

1. Raise the reel fully.
2. Shut down the engine, and remove the key from the ignition.
3. Engage the reel safety props. For instructions, refer to *Engaging Reel Safety Props, page 35*.
4. Remove bolts (A) and access cover (B) closest to the finger that needs to be installed or replaced.

   If you are replacing an existing auger finger, refer to Step *5, page 476*, otherwise proceed to Step *7, page 477* for installation instructions for new auger fingers.

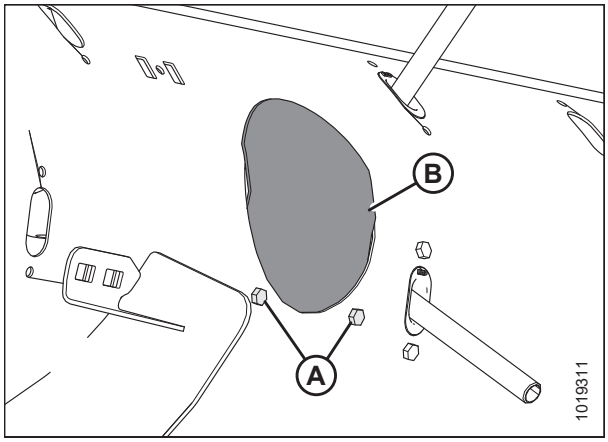

Figure 5.69: Access Hole Cover

5. Remove the existing auger finger as follows:

   a. Remove hairpin (A), pull finger (B) out of bushing (C) from inside the auger.

   b. Remove the finger from the auger by pulling it through plastic guide (D).

   If you are replacing the plastic finger guide before installing the auger finger, refer to Step *6, page 477*, otherwise refer to Step *9, page 478*.

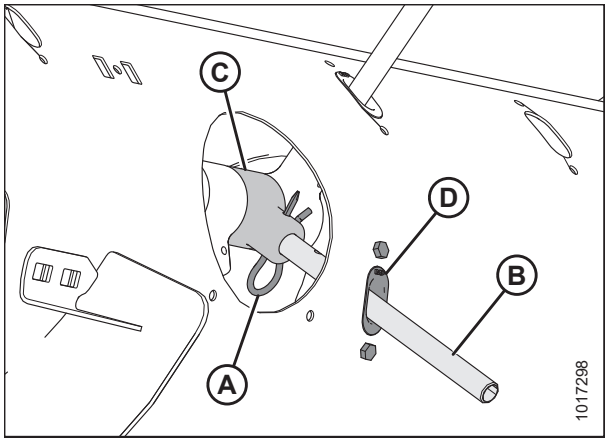

Figure 5.70: Auger Finger

6. Remove plastic finger guide as follows:

   a. Remove bolts (A) securing plastic finger guide (B) to the auger.

   b. Remove guide (B) from inside the auger, and proceed to Step *8, page 477*.

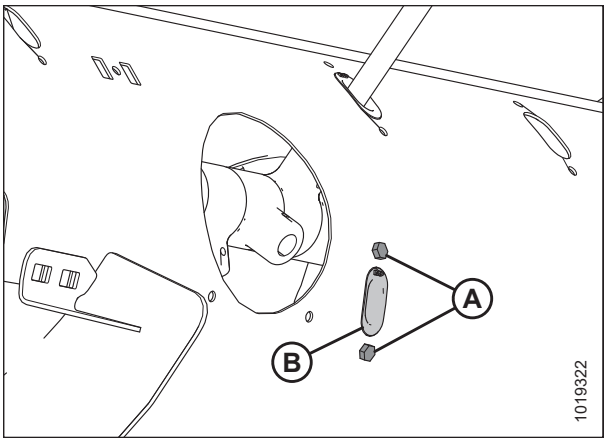

Figure 5.71: Auger Finger Hole

Installing a new auger finger:

7. Remove two bolts (B), tee nuts, and plug (A).

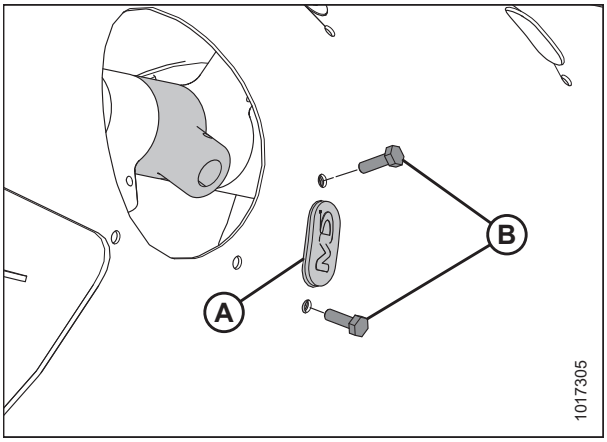

Figure 5.72: Auger Finger Hole

8. Coat bolts (A) with medium-strength threadlocker (Loctite® 243 or equivalent), and then insert plastic finger guide (B) from inside the auger and secure it with bolts and tee nuts. Torque bolts to 9 Nm (80 lbf·in).

   NOTE:

   When installing additional fingers, ensure you install an equal number on each side of the auger.

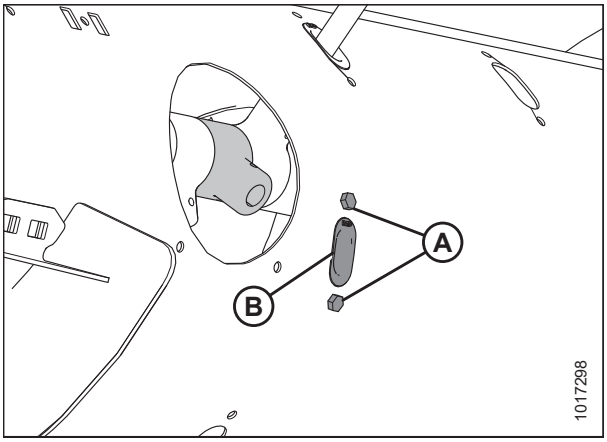

Figure 5.73: Auger Finger Hole

9. From inside the auger, insert new auger finger (B) through plastic guide (D).
10. Insert finger (B) into finger holder (C) and secure with hairpin (A).

    NOTE:

    Note orientation of hairpin (A). The round part should face the direction of auger rotation; the formed side (that is, the S-shaped side) must face the chain drive side of the auger.

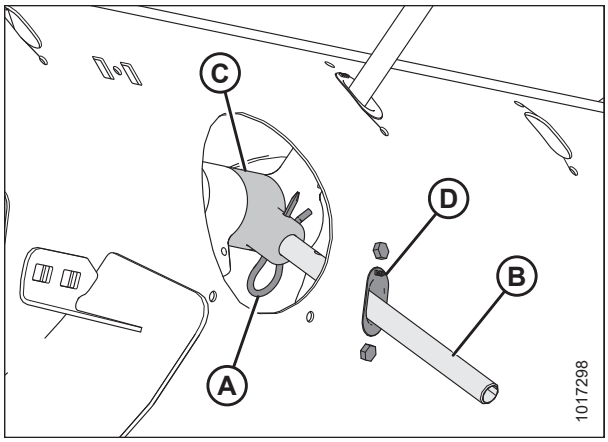

Figure 5.74: Auger Finger

11. Coat bolts (A) with medium-strength threadlocker (Loctite® 243 or equivalent), then reinstall access cover (B) and secure with bolts. Torque to 9 Nm (80 lbf·in).

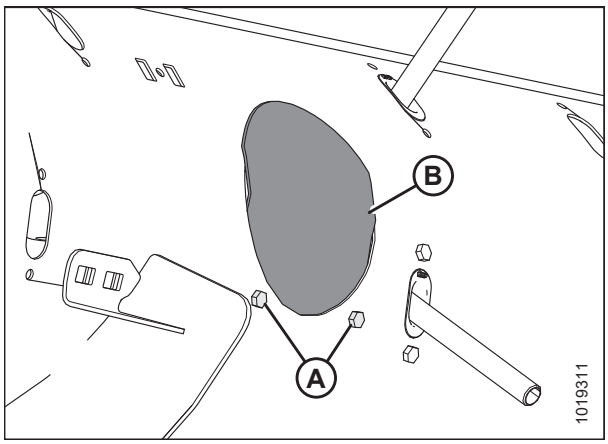

Figure 5.75: Access Hole Cover

Replacing Broken Finger Holder

To replace a broken finger holder, follow these procedures.

NOTE:

Order the Split Finger Holder kit (MD #213026) for parts to replace broken finger holders on an FM100.

Removing Broken Finger Holder

To remove the broken finger holder, follow these steps:

WARNING

To avoid bodily injury or death from unexpected startup or fall of raised machine, always stop engine, remove key, and engage safety props before leaving operator's seat for any reason.

1. Raise the reel.
2. Shut down the engine, and remove the key from the ignition.
3. Engage the reel safety props.
4. Remove bolts (A) and remove access cover (B) closest to the broken finger holder.

   NOTE:

   Inspect for excessively damaged or worn finger guides (C). Replace as required.

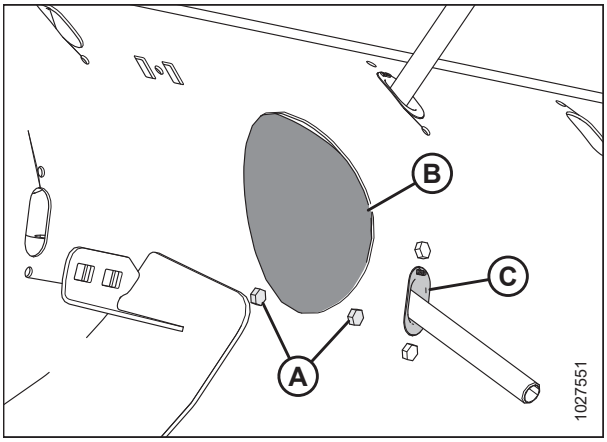

Figure 5.76: Access Cover

5. Remove the remains of the broken finger holder from the finger shaft. You may need to use a chisel and hammer, a saw, or a cutoff disc.

   IMPORTANT:

   Be careful not to damage the finger shaft or finger holders on either side of broken holder.

   NOTE:

   If the auger finger in the broken holder is not bent, broken, or otherwise damaged, you can reuse it in the new finger holder.



Figure 5.77: Broken Finger Holder

Installing Split Finger Holder

To install a split finger holder, follow these steps:

NOTE:

Unless otherwise specified, all parts are provided in kit (MD #213026, MD #274276, or MD #276839).

1. Separate the two halves of the split finger holder.
2. Press two tee nuts (A) into the top half of split finger holder (B).
3. Snap top half of split finger holder (B) on the finger shaft in place of the removed finger holder.

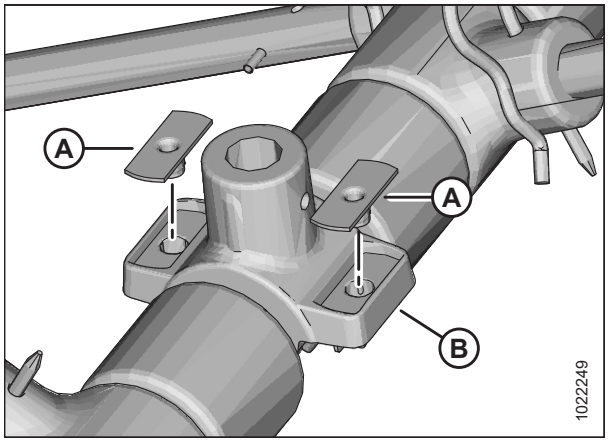

Figure 5.78: Top Half of Split Finger Holder Assembly

4. Inspect (new or retained) auger finger (A) before installation:
   - Make sure finger is straight.
   - Make sure the finger is **NOT** cracked at breakaway groove (B).

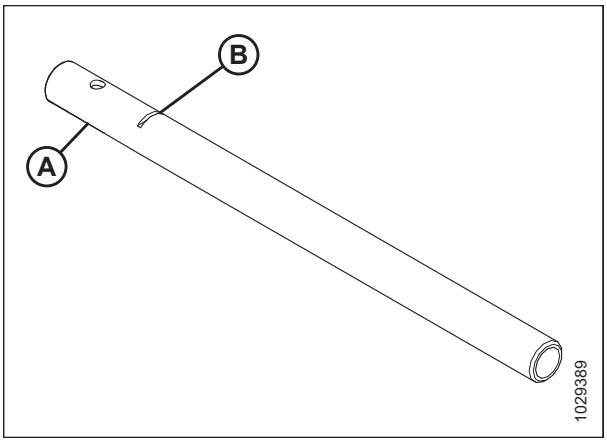

Figure 5.79: Hollow Finger

5. Insert (new or retained) auger finger (A) through the empty finger guide on the outside of the auger drum and into top half of finger holder (B).
6. Secure finger (A) in place with hairpin (C). Ensure the closed end of the hairpin points in the direction of auger-forward rotation.

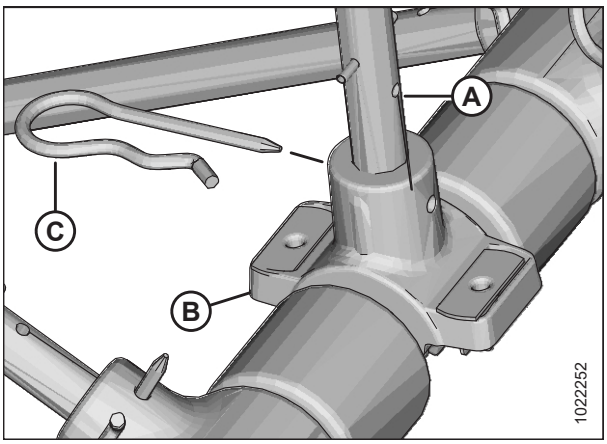

Figure 5.80: Finger Installed in Split Finger Holder

7. Press bottom half of split finger holder (B) onto top half (A), and secure it in place with two M6 hex head bolts (C).

   NOTE:

   Only one bolt is shown in the illustration. The other bolt is installed on the other side of the finger shaft.

8. Torque bolts (C) to 9 Nm (80 lbf·in).

   NOTE:

   Bolts (C) come with a threadlocker patch that will wear off if the bolts are removed. If reinstalling bolts (C), apply medium-strength threadlocker (Loctite® 243 or equivalent) before installation.

9. Make sure there are no loose parts or debris in the auger.

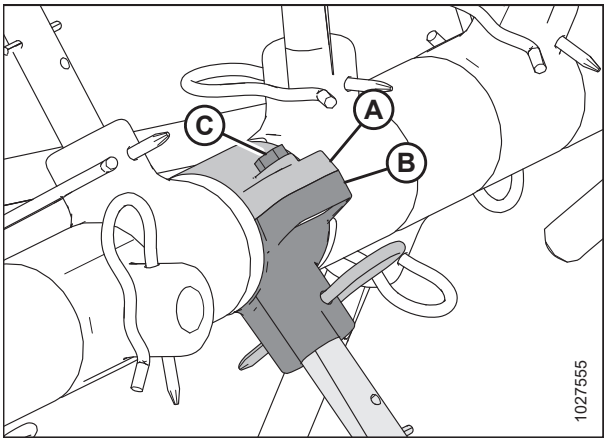

Figure 5.81: Bottom Half of Split Finger Holder

10. Apply medium-strength threadlocker (Loctite® 243 or equivalent) to bolts (A). Install access cover (B) using bolts (A).
11. Torque bolts (A) to 9 Nm (80 lbf·in).

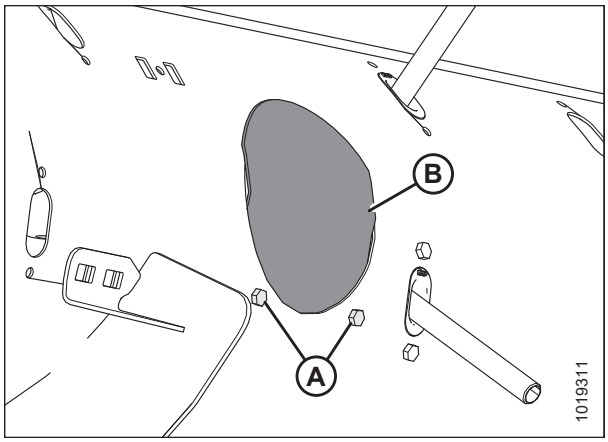

Figure 5.82: Access Cover

Replacing Feed Auger Finger Guides

1. Remove finger (A). For instructions, refer to *Removing Feed Auger Fingers, page 474*.
2. Remove the two bolts securing guide (B) to the feed auger.

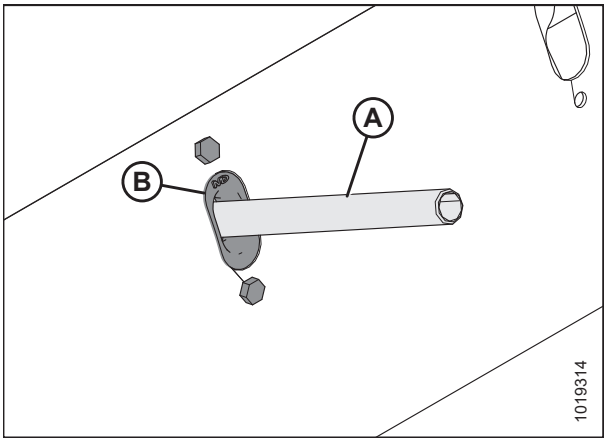

Figure 5.83: Auger Finger

3. From inside the auger, position the plastic guide (B) and secure with bolts (A).
4. Replace the finger. For instructions, refer to *Installing Feed Auger Fingers, page 476*.

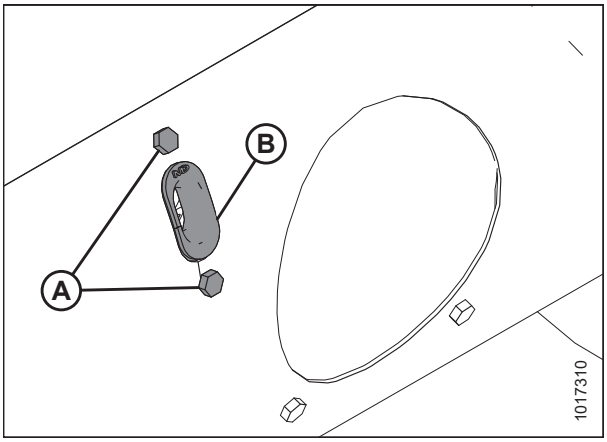

Figure 5.84: Auger Finger Guide

Checking Auger Finger Timing

This procedure is for checking the setting that determines where the fingers are fully extended from the auger.

DANGER

To avoid bodily injury or death from unexpected start-up or fall of a raised machine, always stop engine and remove key before leaving the operator's seat, and always engage safety props before going under the machine for any reason.

NOTE:

Left side of auger shown.

1. Raise the reel fully.
2. Engage the reel safety props. For instructions, refer to *Engaging Reel Safety Props, page 35*.
3. Shut down the engine, and remove the key from the ignition.
4. Check that indicator (C) is set to the same position at each end of the auger.

   NOTE:

   There are two different auger tine extension positions: **A** and **B**. Position **A** (A) is used for canola and position **B** (B) is used for grains. The factory setting for the indicator is position **B** (B).

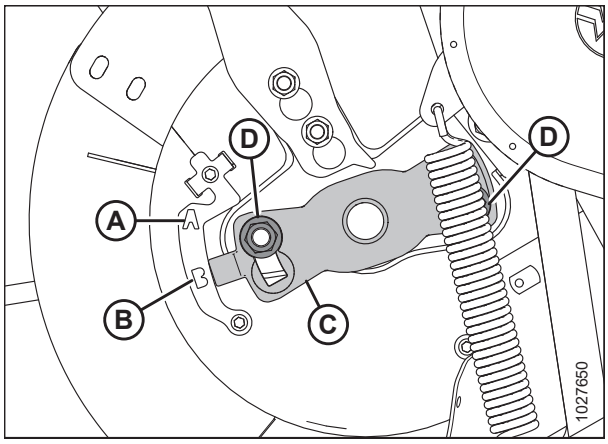

Figure 5.85: Auger Tine Timing – Left Side of Auger Shown

CAUTION

To avoid damaging the auger beyond repair, it is extremely important that both sides are at the same setting.

5. To adjust the indicator position, refer to *Adjusting Auger Finger Timing, page 485*.
6. Disengage the reel safety props. For instructions, refer to *Disengaging Reel Safety Props, page 36*.

Adjusting Auger Finger Timing

To adjust auger finger timing, follow these steps:

DANGER

To avoid bodily injury or death from unexpected start-up or fall of a raised machine, always stop engine and remove key before leaving the operator's seat, and always engage safety props before going under the machine for any reason.

NOTE:

Left side of auger shown.

1. Raise the reel fully.
2. Engage the reel safety props. For instructions, refer to *Engaging Reel Safety Props, page 35*.
3. Shut down the engine, and remove the key from the ignition.
4. Locate finger timing indicator (C) at the end of the auger. There are two auger tine extension positions: Position **A** (A) and position **B** (B).
5. Loosen nuts (D) and adjust finger timing indicator (C) to the desired position.

   IMPORTANT:

   The timing indicator on both ends of the auger must be set at the same position; if not, the auger will be damaged beyond repair.

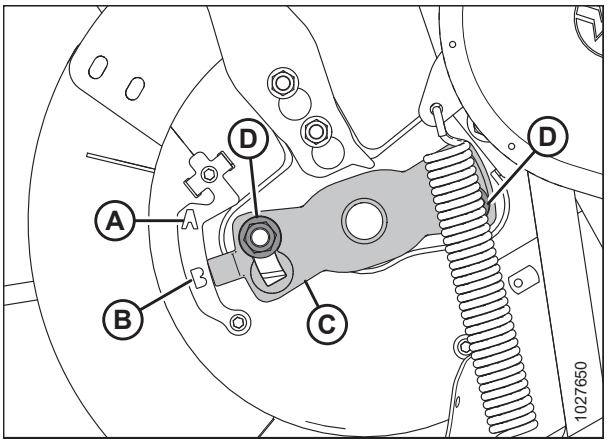

Figure 5.86: Auger Tine Timing Indicator

NOTE:

If the finger timing indicator is pointing at position **A**, it indicates that at that point the auger fingers will be fully extended. This allows the crop to be engaged and released earlier before entering the feeder house. This setting is best used for canola or bushy crops.

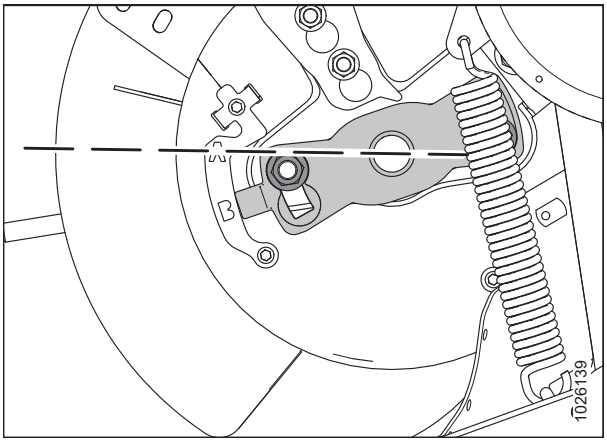

Figure 5.87: Auger Position A

NOTE:

If the indicator is pointing at position **B**, it indicates that at that point the auger fingers will be fully extended. This allows the crop to be engaged and released later before entering the feeder house. This setting is best used for grains or beans.

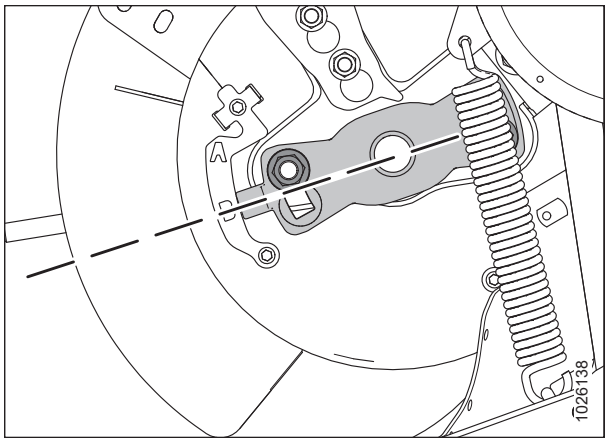

Figure 5.88: Auger Position B

8. Tighten nuts (A) once adjustment is complete. Torque nuts to 92–138 Nm (68–102 lbf·ft).
9. Disengage the reel safety props. For instructions, refer to *Disengaging Reel Safety Props, page 36*.

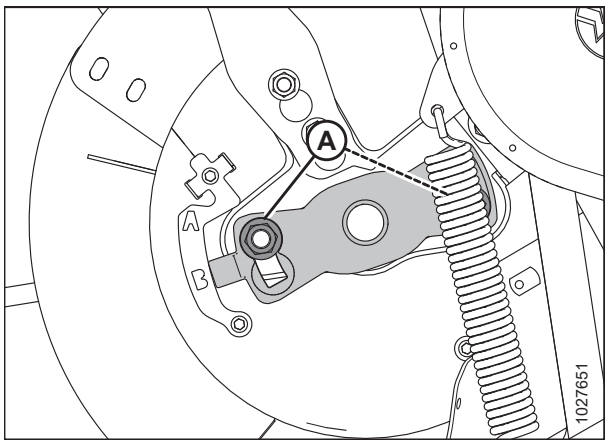

Figure 5.89: Auger Tine Timing Indicator

Using Auger Flighting

The auger flighting on the FM100 can be configured for specific combines and crop conditions. For instructions, refer to *3.8.1 FM100 Feed Auger Configurations, page 62* for combine/crop specific configurations.

5.8 Knife

WARNING

Keep hands clear of the area between guards and knife at all times.

CAUTION

Wear heavy gloves when working around or handling knives.

CAUTION

To avoid personal injury, before servicing machine or opening drive covers, refer to *5.1 Preparing Machine for Servicing, page 429*.

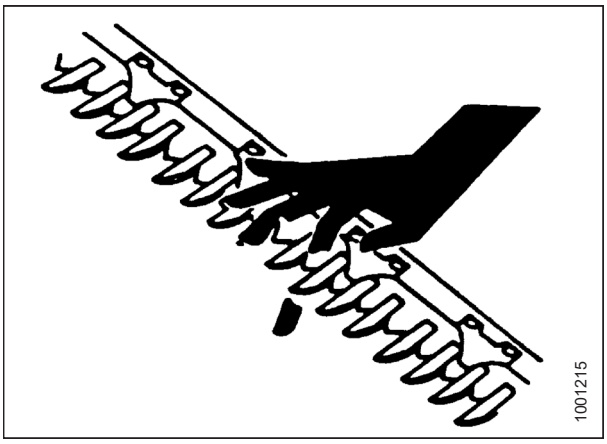

Figure 5.90: Cutterbar Hazard

5.8.1 Replacing Knife Section

Inspect the knife sections daily and ensure they are firmly bolted to the knife back and are not worn or damaged (worn and damaged sections leave behind uncut plants). Worn or damaged sections can be replaced without removing the knife from the cutterbar.

DANGER

To avoid bodily injury or death from unexpected startup of machine, always stop the engine and remove the key before making adjustments to the machine.

IMPORTANT:

Do **NOT** mix finely and coarsely serrated knife sections on the same knife.

1. Shut down the engine, and remove the key from the ignition.
2. Stroke the knife as required to center knife section (A) between guards (E).
3. Remove and retain nuts (B).
4. Remove bars (C) and lift knife section (A) off the knife bar.
5. Remove splice bar (D) if knife section is under the bar.
6. Clean dirt off the knife back, and position the new knife section onto the knife back.
7. Reposition bars (C) and/or splice bars (D), and install nuts (B).

   NOTE:

   If replacing screws, ensure they are fully inserted. Do **NOT** use nuts to draw screws into the knife bar.
8. Torque nuts to 9.5 Nm (7 lbf·ft).

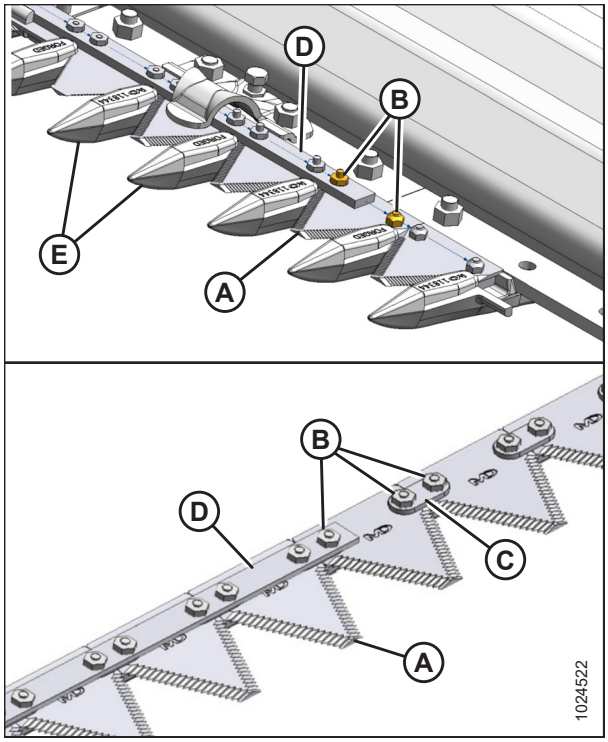

Figure 5.91: Cutterbar

5.8.2 Removing Knife

DANGER

To avoid bodily injury or death from unexpected startup of machine, always stop the engine and remove the key before making adjustments to the machine.

WARNING

Stand to the rear of the knife during removal to reduce the risk of injury from cutting edges. Wear heavy gloves when handling the knife.

1. Shut down the engine, and remove the key from the ignition.
2. Manually stroke the knife to its outer limit.
3. Clean the area around the knifehead.
4. Remove grease fitting (B) from the pin.

   NOTE:

   Removing the grease fitting will make it easier to reinstall the knifehead pin later.
5. Remove bolt and nut (A).
6. Use a screwdriver or chisel in slot (C) to release the load on the knifehead pin.

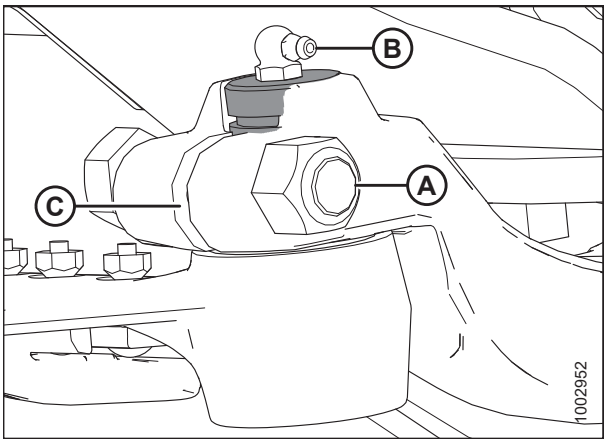

Figure 5.92: Knifehead

7. Use a screwdriver or chisel to pry the pin upwards in the pin groove until the pin is clear of the knifehead.
8. Push the knife assembly inboard until it is clear of the output arm.
9. Seal the knifehead bearing with plastic or tape to keep out dirt and debris unless it is being replaced.
10. Wrap a chain around the knifehead and pull out the knife.

5.8.3 Removing Knifehead Bearing

DANGER

To avoid bodily injury or death from unexpected startup of machine, always stop the engine and remove the key before making adjustments to the machine.

WARNING

Stand to the rear of the knife during removal to reduce the risk of injury from cutting edges. Wear heavy gloves when handling the knife.

1. Shut down the engine, and remove the key from the ignition.
2. Remove the knife. For instructions, refer to *5.8.2 Removing Knife, page 489*.

   NOTE:

   Because the bearing is being replaced, it is not necessary to wrap the knifehead to protect the bearing.

3. Use a flat-ended tool with the same approximate diameter as pin (A). Tap seal (B), bearing (C), plug (D), and O-ring (E) from the underside of the knifehead.

   NOTE:

   Seal (B) can be replaced without removing the bearing. When changing the seal, check the pin and needle bearing for wear and replace if necessary.

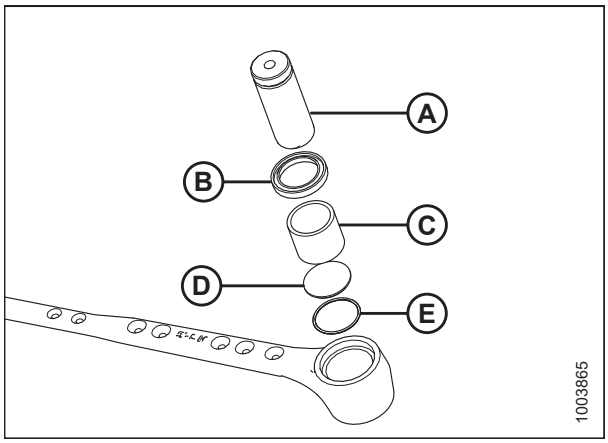

Figure 5.93: Knifehead Bearing Assembly

5.8.4 Installing Knifehead Bearing

1. Place O-ring (E) and plug (D) into the knifehead.

   IMPORTANT:

   Install the bearing with the stamped end (the end with the identification markings) facing up.

2. Use a flat-ended tool (A) with the same approximate diameter as bearing (C), and push the bearing into the knifehead until the top of the bearing is flush with the step in the knifehead.
3. Install seal (B) into the knifehead with the lip facing outwards.

   IMPORTANT:

   To prevent premature knifehead or knife drive box failure, ensure there is a tight fit between the knifehead pin and the needle bearing, and between the knifehead pin and the output arm.

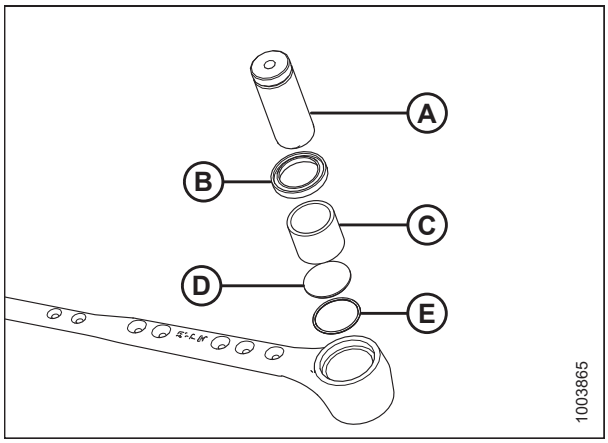

Figure 5.94: Knifehead Bearing Assembly

4. Install the knife. For instructions, refer to *5.8.5 Installing Knife, page 491*.

5.8.5 Installing Knife

DANGER

To avoid bodily injury or death from unexpected startup of machine, always stop the engine and remove the key before making adjustments to the machine.

WARNING

Stand to the rear of the knife during removal to reduce the risk of injury from cutting edges. Wear heavy gloves when handling the knife.

1. Shut down the engine, and remove the key from the ignition.
2. Slide the knife into place and align the knifehead with the output arm.
3. Install knifehead pin (A) through output arm (C) and into the knifehead.

   NOTE:

   Remove the grease fitting from the knifehead pin for easier installation of knifehead pin.
4. Position the pin so that groove (B) is 1.5 mm (1/16 in.) above output arm (C).
5. Secure pin with 5/8 x 3 in. hex head bolt and nut (D), and torque to 217 Nm (160 lbf·ft).

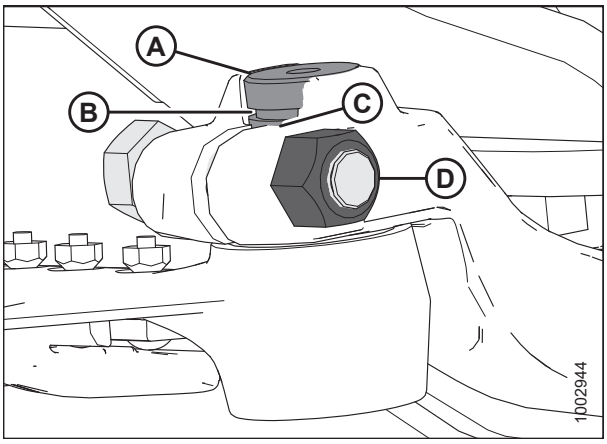

Figure 5.95: Knifehead

6. Install grease fitting (A) into the knifehead pin, and turn the grease fitting for easy access.
7. Slowly apply grease to the knifehead until slight downward movement of the knifehead is observed.

   IMPORTANT:

   Do **NOT** overgrease the knifehead. Overgreasing leads to knife misalignment causing excessive heating of guards and overloading of drive systems. If overgreasing occurs, remove the grease fitting to release pressure.

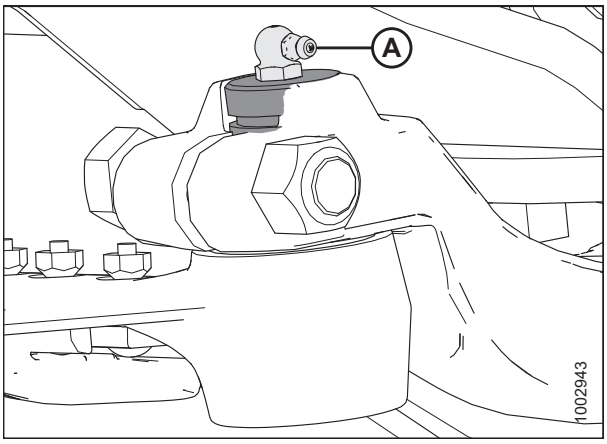

Figure 5.96: Knifehead

5.8.6 Spare Knife

A spare knife can be stored in the header frame tube (A) at the left end. Ensure the spare knife is secured in place.

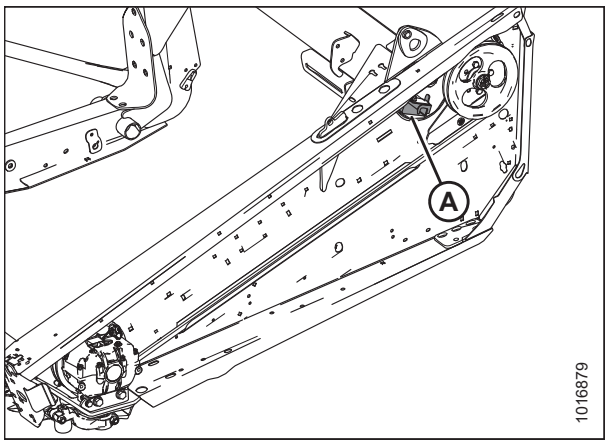

Figure 5.97: Spare Knife

5.8.7 Knife Guards

Perform **DAILY** inspections to ensure the knife guards are aligned and the knife sections are contacting the shear surfaces of the knife guards. Depending on your cutting needs, you may be using either pointed guards or stub guards.

Adjusting Pointed Knife Guards

DANGER

To avoid bodily injury or death from unexpected startup of machine, always stop the engine and remove the key before making adjustments to the machine.

1. Shut down the engine, and remove the key from the ignition.
2. Position tool (A) as shown, and pull up to adjust the guard tips upwards.

   NOTE:

   Use guard straightening tool (MD #140135) available from your MacDon Dealer.

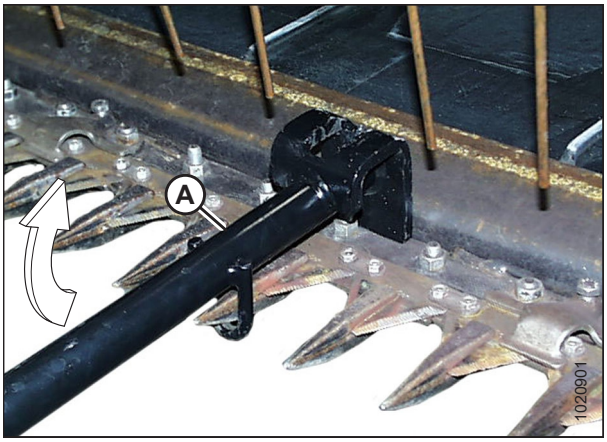

Figure 5.98: Upward Adjustment

3. Position tool (A) as shown, and push down to adjust the guard tips downwards.

   NOTE:

   If material is tough to cut, install stub guards with top guard and adjuster plate. A kit is available from your MacDon Dealer. Refer to *6.3.5 Stub Guard Conversion Kit, page 629*.

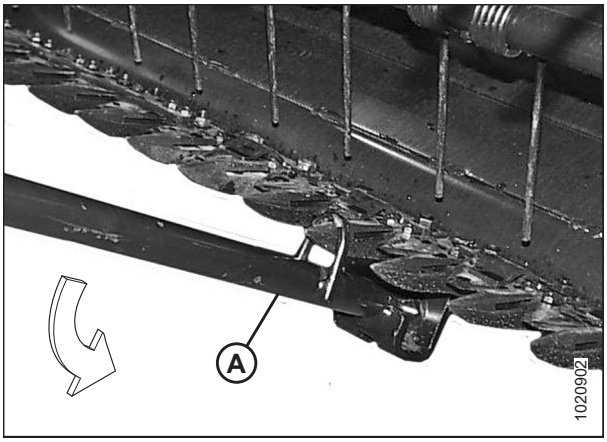

Figure 5.99: Downward Adjustment

Replacing Pointed Guards

This procedure replacing standard and drive side guards.

DANGER

To avoid bodily injury or death from unexpected startup of machine, always stop the engine and remove the key before making adjustments to the machine.

1. Shut down the engine, and remove the key from the ignition.
2. Stroke the knife manually until the knife sections are spaced midway between the guards.
3. Remove two nuts (B) and bolts attaching guard (A) and hold-down clip (C) (if applicable) to the cutterbar.
4. Remove guard (A), hold-down clip (C), and the plastic wearplate (if installed).

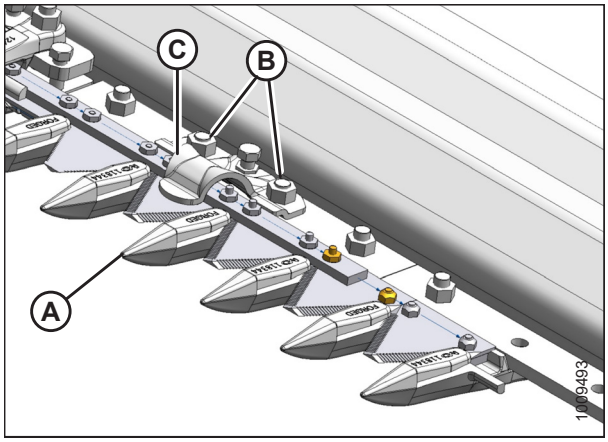

Figure 5.100: Pointed Guards

IMPORTANT:

The first four outboard guards (B) on the drive sides of the header do **NOT** have ledger plates. Ensure proper replacement guards are installed at these locations.

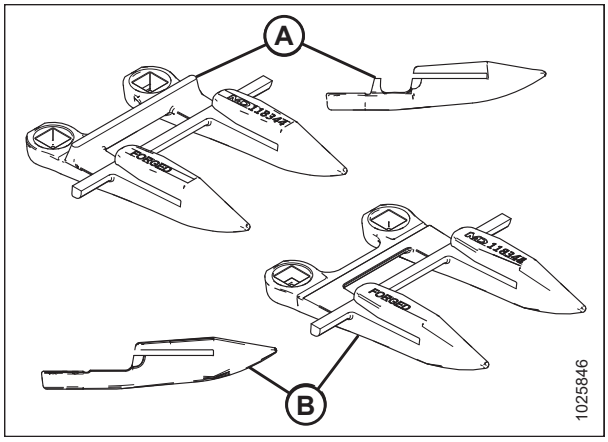

Figure 5.101: Pointed Guards

A - Standard **B - Drive Side**

5. Position new guard (A), hold-down clip (C), and the plastic wearplate (if applicable) onto the cutterbar. Secure with two nuts (B) and bolts, but do **NOT** tighten.
6. Check and adjust the clearance between the hold-down clips and the knife. For instructions, refer to *Adjusting Hold-Downs with Pointed Guards, page 497*.

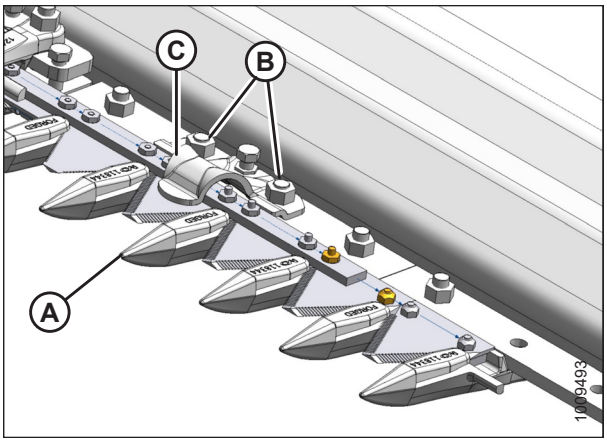

Figure 5.102: Pointed Guards

Replacing Stub Guards

Stub guards, complete with top guides and adjuster plates, are designed to cut tough crops and are factory-installed at the outer ends of specific headers.

DANGER

To avoid bodily injury or death from unexpected startup of machine, always stop the engine and remove the key before making adjustments to the machine.

1. Shut down the engine, and remove the key from the ignition.
2. Stroke the knife manually until the knife sections are spaced midway between the guards.
3. Remove two nuts (A) and bolts attaching guard (B) and top guide (C) to the cutterbar.
4. Remove guard (B), the plastic wearplate (if installed), top guide (C), and adjuster bar (D).

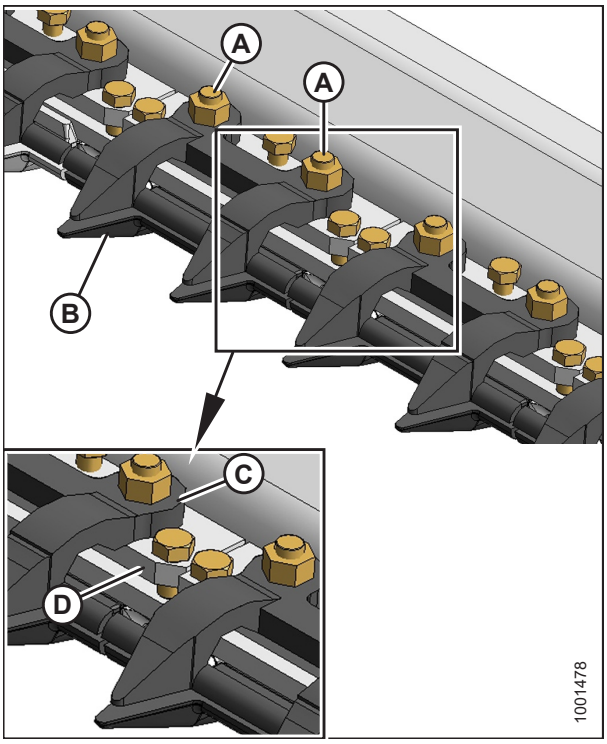

Figure 5.103: Stub Guards

IMPORTANT:

The first four outboard guards (A) on the drive sides of the header do **NOT** have ledger plates. Ensure the proper replacement guards are installed at these locations.

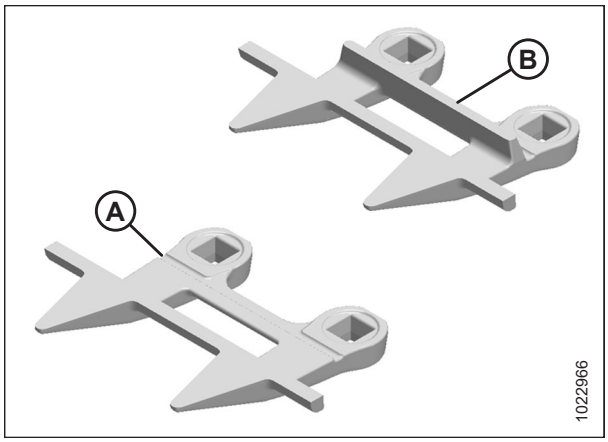

Figure 5.104: Stub Guards

A - Drive Side Guard B - Standard Guard with Ledger Plate

5. Position the plastic wearplate (if applicable), replacement guard (B), adjuster bar (D), and top guide (C), and then install bolts and nuts (A). Do **NOT** tighten.
6. Check and adjust the clearance between the hold-down clips and the knife. For instructions, refer to *Adjusting Hold-Down with Stub Guards, page 498*.

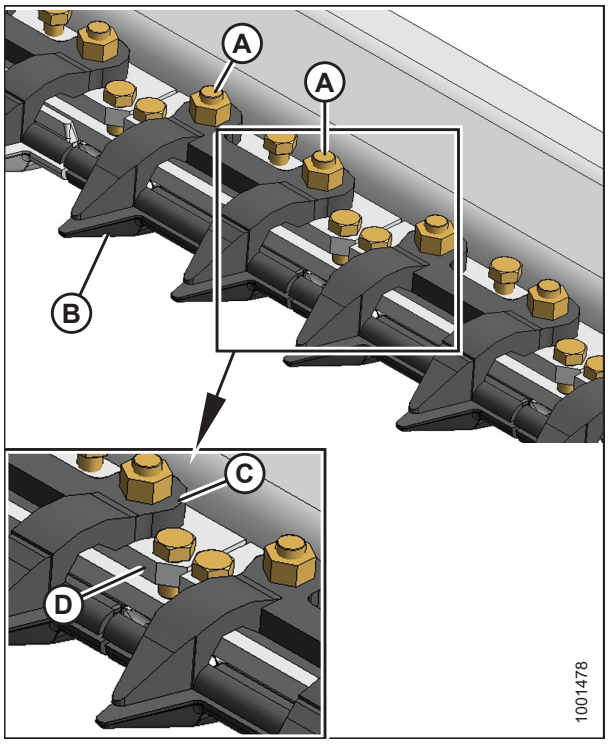

Figure 5.105: Stub Guards

Checking Knife Hold-Downs

Perform daily inspections to ensure the knife hold-downs are preventing the knife sections from lifting off the guards while permitting the knife to slide without binding. Use a feeler gauge to measure the clearance between the hold-downs and knife sections, and refer to the following for adjustment procedures:

- *Adjusting Hold-Downs with Pointed Guards, page 497*
- *Adjusting Hold-Down with Stub Guards, page 498*

NOTE:

Align guards prior to adjusting the hold-downs. Refer to *Adjusting Pointed Knife Guards, page 493*.

Adjusting Hold-Downs with Pointed Guards

WARNING

To avoid bodily injury or death from unexpected startup of machine, always stop engine and remove key before adjusting machine.

1. Shut down the engine, and remove the key from the ignition.
2. Use a feeler gauge to measure the clearance between the standard guard hold-down (A) and the knife section. Ensure the clearance is 0.1–0.6 mm (0.004–0.024 in.).
3. To lower the front of the hold-down and decrease clearance, turn bolt (B) clockwise; to raise the front of the hold-down and increase clearance, turn bolt (B) counterclockwise.

   NOTE:

   For larger adjustments, it may be necessary to loosen nuts (C), turn adjuster bolt (B), and then retighten nuts.

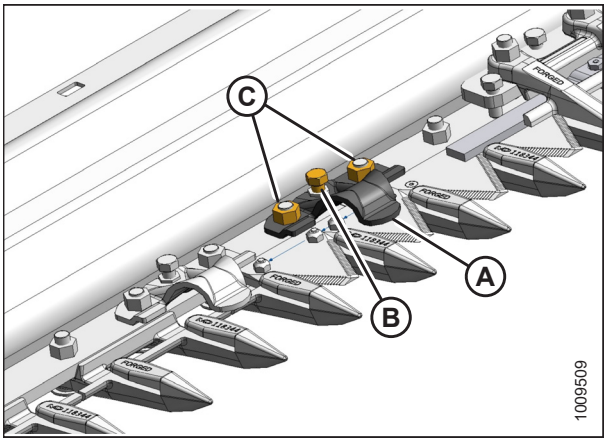

Figure 5.106: Standard Guard Hold-Down

4. Use a feeler gauge to measure the clearance between the center guard hold-down (A) and the knife section. Ensure the clearance is between the following measurements:
   - **At hold-down tip (B):** 0.1–0.4 mm (0.004–0.016 in.)
   - **At rear of hold-down (C):** 0.1–1.0 mm (0.004–0.040 in.)
5. Adjust the clearance as follows:
   a. Tighten nuts (D) until finger tight.
   b. Turn three adjuster bolts (E) clockwise to raise the front of the hold-down and increase clearance, or counterclockwise to lower the front of the hold-down and decrease clearance.
   c. When all the adjustments are complete and the specified clearances are achieved, torque nuts (D) to 88 Nm (65 lbf·ft).

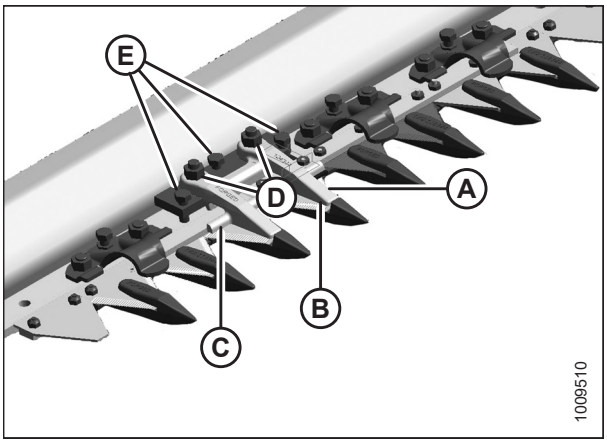

Figure 5.107: Center Guard Hold-Down

WARNING

Check to be sure all bystanders have cleared the area.

6. Complete the hold-down adjustments, run the header at low engine speed, and listen for noise caused by insufficient clearance.

   IMPORTANT:

   Insufficient hold-down clearance will result in overheating of the knife and guards—readjust as necessary.

Adjusting Hold-Down with Stub Guards

WARNING

To avoid bodily injury or death from unexpected startup of machine, always stop engine and remove key before adjusting machine.

1. Shut down the engine, and remove the key from the ignition.
2. Use a feeler gauge to measure the clearance between the stub guard hold-down (A) and the knife section. Ensure the clearance is between the following measurements:
   - **At hold-down tip (B):** 0.1–0.4 mm (0.004–0.016 in.)
   - **At rear of hold-down (C):** 0.1–1.0 mm (0.004–0.040 in.)
3. Adjust the clearance as follows:
   a. Tighten nuts (D) until they are finger tight.
   b. To lower the front of the hold-down and decrease clearance, turn three adjuster bolts (E) clockwise; to raise the front of the hold-down and increase clearance, turn adjuster bolts (E) counterclockwise.
   c. Torque nuts (D) to 88 Nm (65 lbf·ft) after all the adjustments are complete and the specified clearances are achieved.

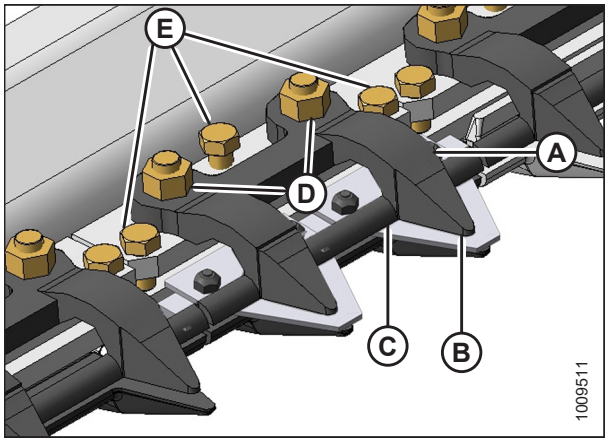

Figure 5.108: Stub Guards

WARNING

Check to be sure all bystanders have cleared the area.

4. Complete the hold-down adjustments, run the header at low engine speed, and listen for noise caused by insufficient clearance.

   IMPORTANT:

   Insufficient hold-down clearance will result in overheating of the knife and guards—readjust as necessary.

5.8.8 Knifehead Shield

The knifehead shield attaches to the endsheet and reduces the knifehead opening to prevent cut crop from accumulating in the knifehead cut-out.

The shields and mounting hardware are available from your MacDon Dealer.

IMPORTANT:

Remove the shields when using the cutterbar on the ground in muddy conditions. Mud may pack into the cavity behind the shield which could result in knife drive box failure.

Installing Knifehead Shield

The knifehead shield is supplied in flattened form, but it can be bent to suit installation on pointed or stub guard cutterbars. Knifehead shields differ slightly depending on header size and guard configuration, so ensure you are using the proper knifehead shield for your header. Refer to your parts catalog for proper replacement parts.

DANGER

To avoid bodily injury or death from unexpected start-up or fall of raised machine, always stop engine, remove key, and engage safety props before going under header for any reason.

CAUTION

Wear heavy gloves when working around or handling knives.

1. Raise the reel to its full height, lower the header to the ground.
2. Shut down the engine, and remove the key from the ignition.
3. Engage the safety props.
4. Place the knifehead shield (A) against the endsheet as shown. Align the shield so the cutout matches the profile of the knifehead and/or hold-downs.
5. Bend the knifehead shield (A) along the slit to conform to the endsheet.
6. Align the mounting holes and secure with two 3/8 x 1/2 in. Torx® head bolts (B).
7. Tighten the bolts (B) just enough to hold the knifehead shield (A) in place while allowing it to be adjusted as close to the knifehead as possible.
8. Manually rotate the knife drive box pulley to move the knife and check for areas of contact between the knifehead and knifehead shield (A). Adjust the shield to eliminate interference with the knife if necessary.
9. Tighten the bolts (B).

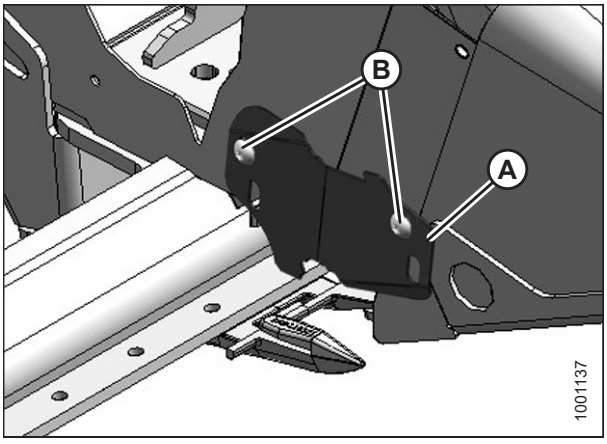

Figure 5.109: Knifehead Shield

5.9 Knife Drive System

The knife drive system transforms pumped hydraulic pressure into a mechanical motion that stokes a series of serrated knife blades at the front of the header back and forth to cut a variety of crops.

5.9.1 Knife Drive Box

CAUTION

To avoid personal injury, before servicing machine or opening drive covers, refer to *5.1 Preparing Machine for Servicing, page 429*.

Double-knife headers have a knife drive box (A) at each end. Knife drive boxes are belt-driven by a hydraulic motor, and convert rotational motion into the reciprocating motion of the knife.

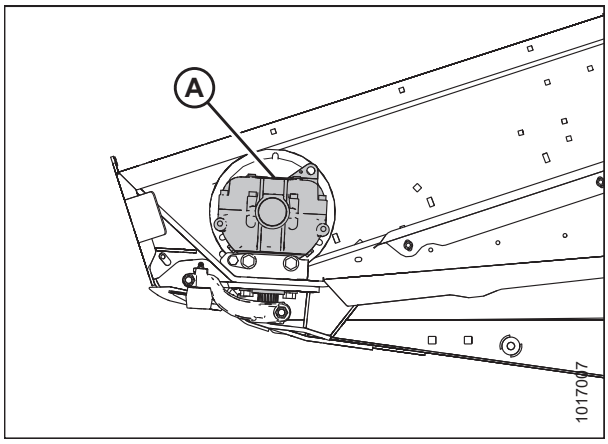

Figure 5.110: Left Knife Drive Box Shown – Right Similar

Checking Knife Drive Box

Single-knife headers have one knife drive box and double-knife headers have two knife drive boxes. To access the knife drive box(es), the endshield(s) must be fully opened.

DANGER

To avoid bodily injury or death from unexpected startup of machine, always stop the engine and remove the key before making adjustments to the machine.

1. Shut down the engine, and remove the key from the ignition.
2. Press down on latch (A) in the opening on the inboard side of the endsheet.
3. Pull endshield open using handle depression (B).

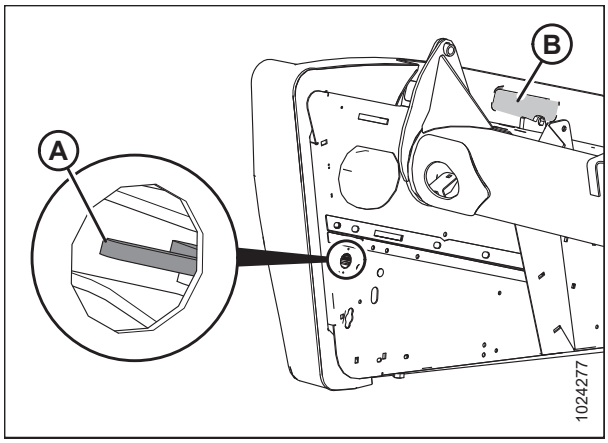

Figure 5.111: Endshield Latch Access

4. Swivel the endshield toward the back of the header and use safety latch (B) to secure endshield support tube (A) to the endsheet.

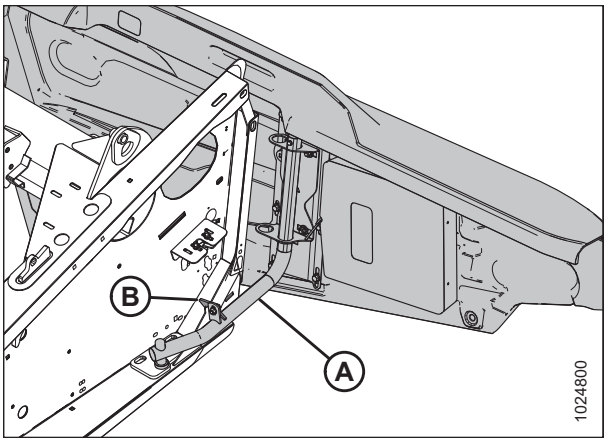

Figure 5.112: Left Endshield Support Tube

IMPORTANT:

The knife drive box breather is shipped in position (A) (forward) to prevent oil loss during transport. The breather **MUST** be repositioned to location (B) to prevent oil loss during normal operation. Failure to do so can result in damage to the knife drive box.

5. Check position of plug (A) and breather (B) at knife drive box. Position **MUST** be as shown.

6. Remove breather (B) and check oil level. The oil level should be between bottom edge (C) of lower hole (D) and bottom (E) of the breather.

NOTE:

Check oil level with top of knife drive box horizontal and with breather (B) screwed in.

7. Reinstall breather and tighten.

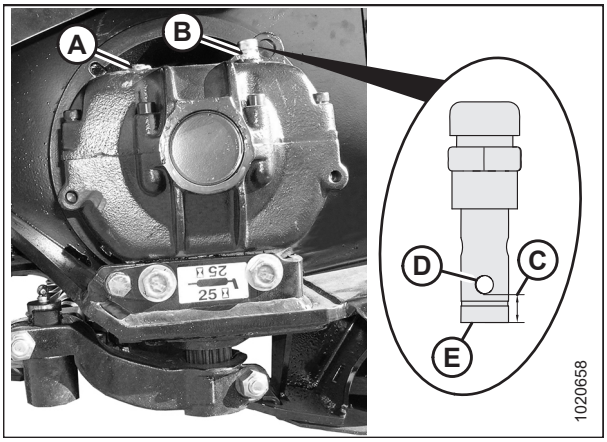

Figure 5.113: Knife Drive Box

Checking Mounting Bolts

Check the torque on the four knife drive box mounting bolts (A) and (B) after the first 10 hours of operation and every 100 hours thereafter.

1. Torque the side bolts (A) first, then torque the bottom bolts (B). Torque all bolts to 271 Nm (200 lbf·ft).

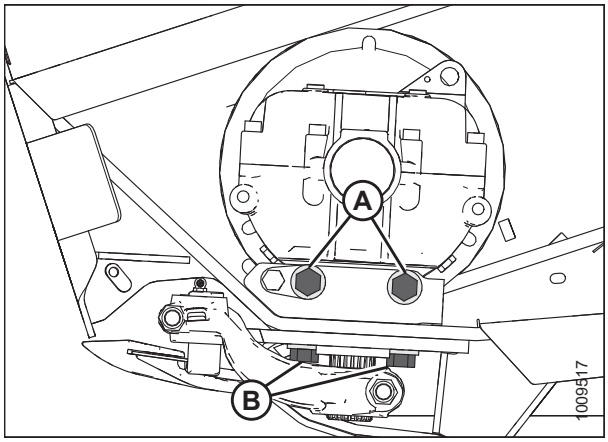

Figure 5.114: Knife Drive Box

Removing Knife Drive Box

DANGER

To avoid bodily injury or death from unexpected startup of machine, always stop the engine and remove the key before making adjustments to the machine.

For timed double-knife headers:

NOTE:

The procedure is the same for both ends of a timed double-knife header. Images shown are for the left end—the right end is opposite.

1. Shut down the engine, and remove the key from the ignition.
2. Open the endshield. For instructions, refer to *Opening Endshields, page 37*.
3. Loosen the two nuts (A) enough to allow idler pulleys (B) to pivot.
4. Loosen the two nuts (A) on the idler bracket to relieve the belt tension.
5. Loosen nut (B) on the idler pulley and slide the idler down to loosen the belt.
6. Proceed to Step *6, page 503*.

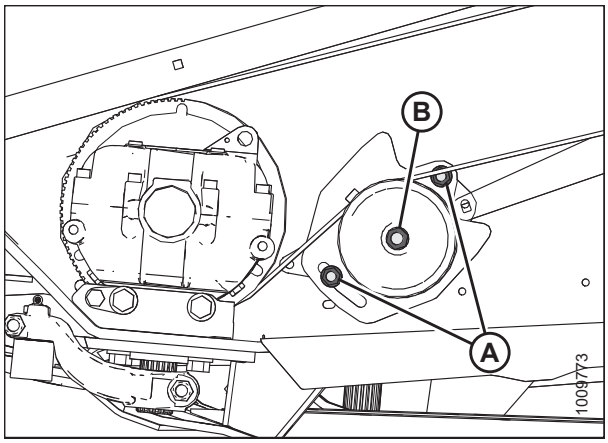

Figure 5.115: Timed Double-Knife Drive

For single-knife and untimed double-knife headers:

1. Shut down the engine, and remove the key from the ignition.
2. Open the endshield. For instructions, refer to *Opening Endshields, page 37*.
3. Loosen the two bolts (A) securing the motor assembly to the header endsheet.
4. Loosen the belt tension by turning tensioning bolt (B) counterclockwise.
5. Proceed to Step *6, page 503*.

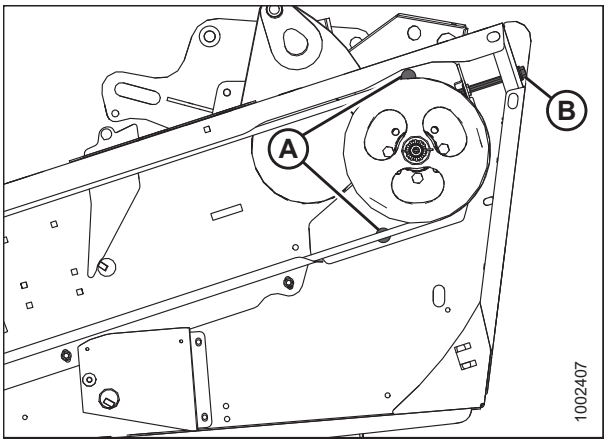

Figure 5.116: Knife Drive

For both timed and untimed headers:

6. To provide clearance between the knife drive box pulley and the endsheet, open access cover (A) on the endsheet behind the cutterbar.

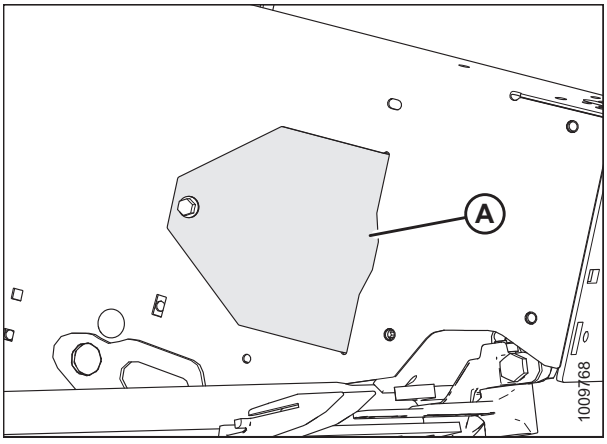

Figure 5.117: Access Cover

7. Remove belt (A) from drive pulley (B).
8. Slip belt (A) over and behind knife drive box pulley (C). Use the notch in the pulley to assist with belt removal.

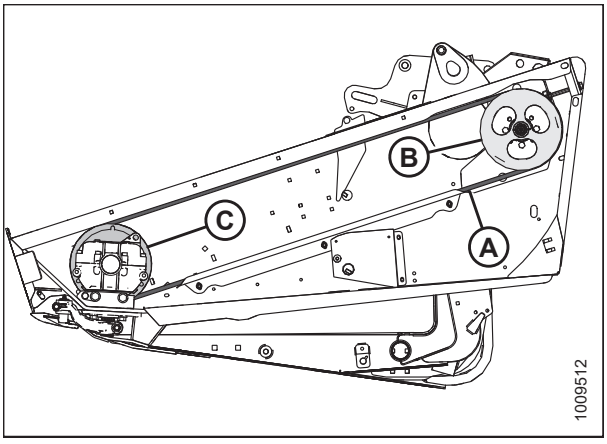

Figure 5.118: Knife Drive

9. Manually stroke the knife to its outer limit.
10. Clean the area around the knifehead.
11. Remove grease fitting (B) from the pin.

    NOTE:

    Removing the grease fitting will make it easier to reinstall the knifehead pin later.

12. Remove bolt and nut (A).
13. Use a screwdriver or chisel in slot (C) to release the load on the knifehead pin.
14. Use a screwdriver or chisel to pry the pin upwards in the pin groove until the pin is clear of the knifehead.
15. Push the knife assembly inboard until it is clear of the output arm.
16. Seal the knifehead bearing with plastic or tape to keep out dirt and debris unless it is being replaced.
17. Remove bolt (A) that clamps knife drive arm (B) to the knife drive box output shaft.
18. Remove knife drive arm (B) from the knife drive box output shaft.
19. Remove the four knife drive box mounting bolts (C) and (D).

    NOTE:

    If shims are set on bolts (C) between the knife drive box and housing, mark the location of the shims for later reinstallation.

    NOTE:

    Do **NOT** remove bolt (E); it is factory-set to properly position the knife drive box in the correct fore-aft position.

CAUTION

The knife drive box and pulley weigh over 35 kg (65 lb.) Use care when removing or installing. Lug (L) can be used for lifting.

20. Remove the knife drive box from the header and set aside.

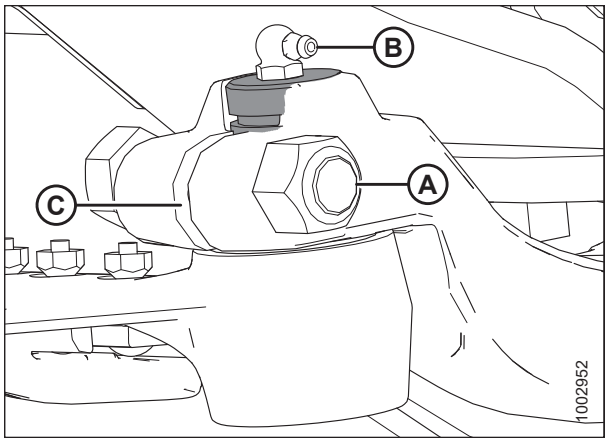

Figure 5.119: Knifehead

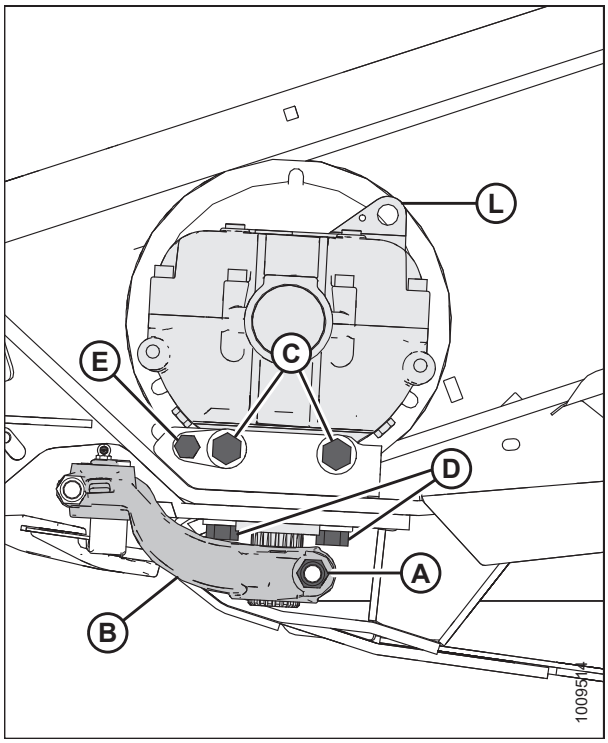

Figure 5.120: Knife Drive Box

Removing Knife Drive Box Pulley

Before removing the knife drive box pulley, remove the knife drive box from the header. For instructions, refer to *Removing Knife Drive Box, page 502*.

1. Loosen and remove knife drive box pulley clamping bolt (A) and nut (B).
2. Using a three-jaw puller, remove knife drive box pulley (C).

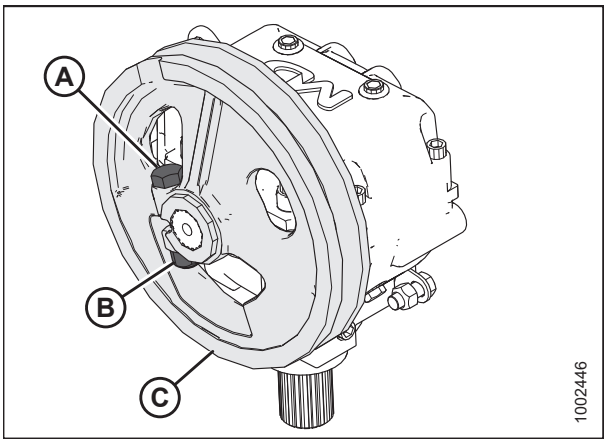

Figure 5.121: Knife Drive Box and Pulley

Installing Knife Drive Box Pulley

1. Ensure the splines and bores in the pulley and drive arm are free of paint, oil, and solvents.
2. Apply two bands (A) of medium-strength threadlocker (Loctite® 243 or equivalent) around the shaft as shown at right. Apply one band at the end of the spline and the second band in the middle.
3. Press pulley (B) onto the shaft until flush with the end of the shaft.

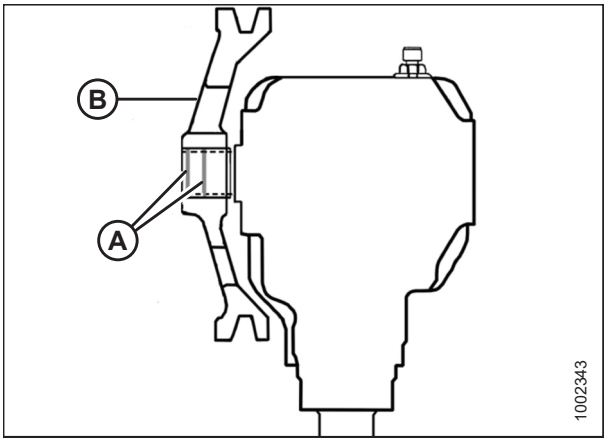

Figure 5.122: Knife Drive Box

4. Secure pulley (C) with a 5/8 x 3 in. hex head bolt (A) and a distorted thread NC lock nut (B). Torque bolt to 217 Nm (160 lbf·ft).

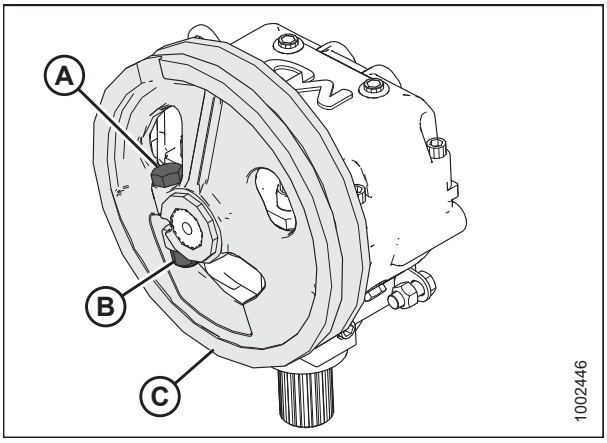

Figure 5.123: Knife Drive Box and Pulley

Installing Knife Drive Box

NOTE:

If the pulley was removed from the knife drive box, refer to *Installing Knife Drive Box Pulley, page 505*. If the pulley was **NOT** removed, proceed to Step *1, page 506*.

CAUTION

The knife drive box and pulley weigh over 35 kg (65 lb.) Use care when removing or installing. Lug (L) can be used for lifting.

1. Position the knife drive box onto the header mount and install the belt onto the pulley.
2. Secure the knife drive box to the frame using two 5/8 x 1 3/4 in. grade 8 hex head bolts (A) on the side and two 5/8 x 2 1/4 in. grade 8 hex head bolts (B) on the bottom.

   NOTE:

   If shims were removed from bolts (A) in Step *19, page 504*, install them again in the same place between the knife drive box and housing.
3. Tighten knife drive box side bolts (A) slightly, then tighten bottom bolts (B) to ensure proper contact with the vertical and horizontal mounting surfaces. Do **NOT** torque the bolts at this time.

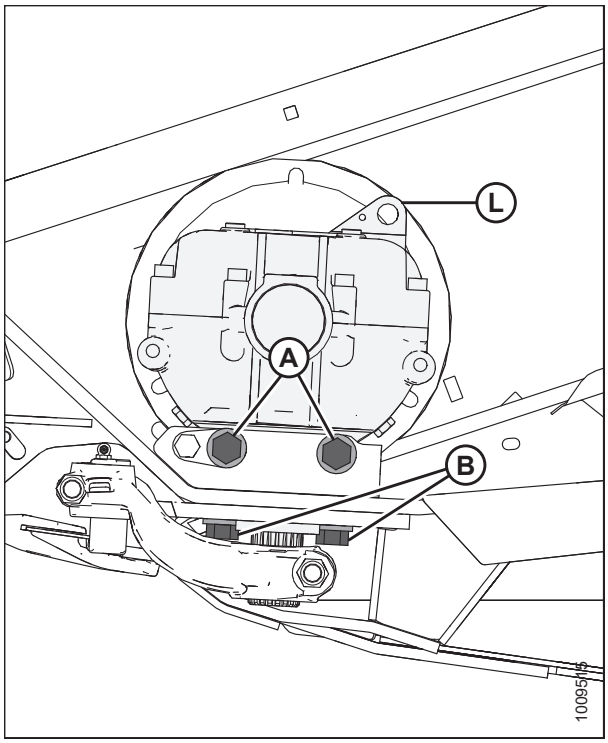

Figure 5.124: Knife Drive Box

4. Apply two bands (A) of medium-strength threadlocker (Loctite® 243 or equivalent) to the output shaft as shown. Apply one band at the end of the output shaft and the second band in the middle.
5. Slide output arm (B) onto the output shaft. Rotate the pulley to ensure the splines are properly aligned and the drive arm clears the frame on the inboard stroke.

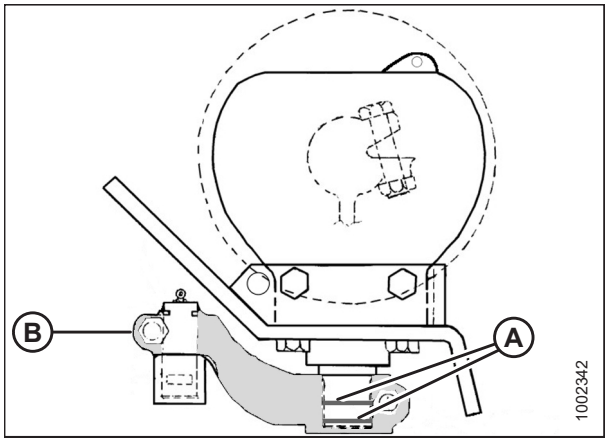

Figure 5.125: Knife Drive Box

6. Position output arm (A) to the farthest outboard position.
7. Move output arm (A) up or down on the splined shaft until it is almost contacting knifehead (B) (exact clearance [C] is set during the knifehead pin installation).

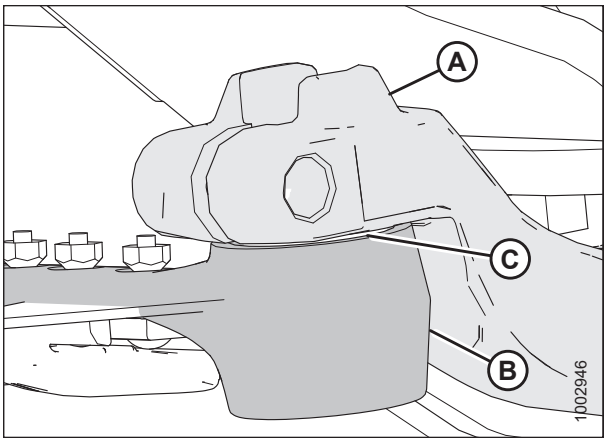

Figure 5.126: Knifehead

8. Torque output arm bolt (A) to 217 Nm (160 lbf·ft).

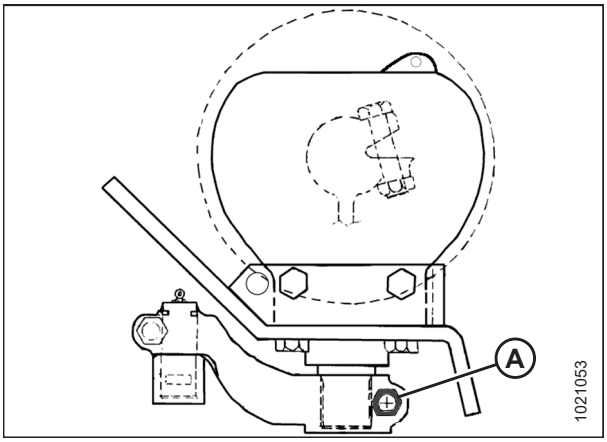

Figure 5.127: Knife Drive Box

9. Slide the knife into place and align the knifehead with the output arm.
10. Install knifehead pin (A) through output arm (C) and into the knifehead.

    NOTE:

    Remove the grease fitting from the knifehead pin for easier installation of knifehead pin.

11. Position the pin so that groove (B) is 1.5 mm (1/16 in.) above output arm (C).
12. Secure pin with 5/8 x 3 in. hex head bolt and nut (D), and torque to 217 Nm (160 lbf·ft).

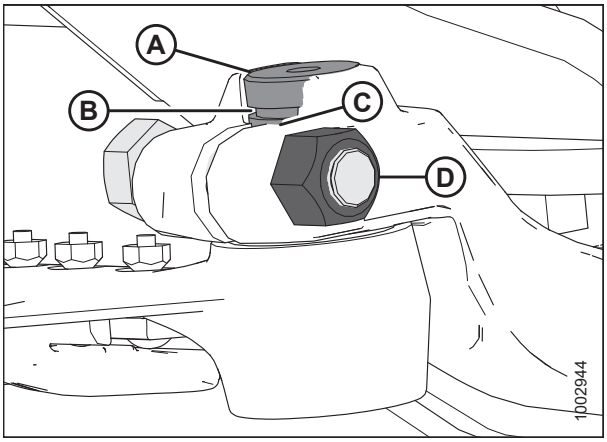

Figure 5.128: Knifehead

13. Install grease fitting (A) into the knifehead pin, and turn the grease fitting for easy access.
14. Slowly apply grease to the knifehead until slight downward movement of the knifehead is observed.

    IMPORTANT:

    Do **NOT** overgrease the knifehead. Overgreasing leads to knife misalignment causing excessive heating of guards and overloading of drive systems. If overgreasing occurs, remove the grease fitting to release pressure.

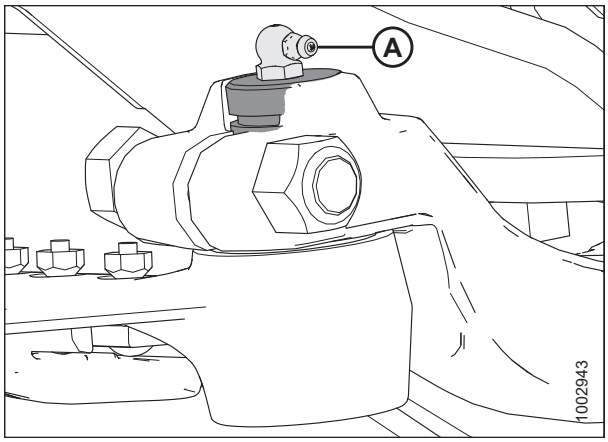

Figure 5.129: Knifehead

15. Tighten the knife drive box side bolts (A) first, then tighten bottom bolts (B). Torque to 271 Nm (200 lbf·ft).
16. Move the output arm to the mid-stroke position, and ensure the knife bar doesn't contact the front of the first guard. If the knife drive box requires adjustment, contact your MacDon Dealer.
17. Install and tension the knife drive belts.
    - For untimed headers, refer to *Checking and Tensioning, page 513*.
    - For timed double-knife headers, also check the knife timing. For instructions, refer to *Adjusting Timed Double-Knife Timing, page 521*.
    - For double-knife headers, refer to *Checking and Tensioning Timed Double-Knife Drive Belts, page 519*.
18. Close the endshield. For instructions, refer to *Closing Endshields, page 38*.

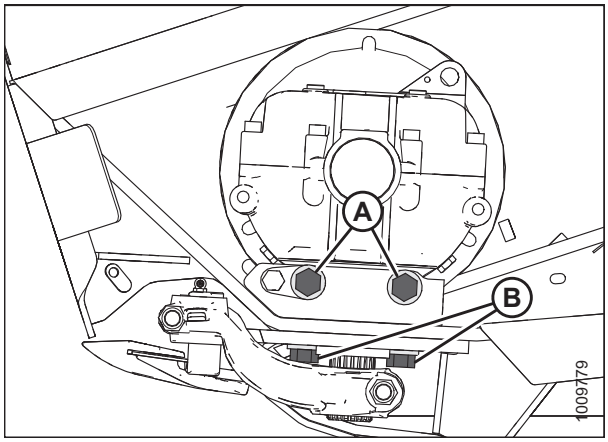

Figure 5.130: Knife Drive Box

Changing Oil in Knife Drive Box

DANGER

To avoid bodily injury or death from unexpected startup of machine, always stop the engine and remove the key before making adjustments to the machine.

Change the knife drive box lubricant after the first 50 hours of operation and every 1000 hours (or 3 years) thereafter.

1. Shut down the engine, and remove the key from the ignition.
2. Raise the header and place a container large enough to hold approximately 2.2 liters (2.3 quarts) under the knife drive box to collect the oil.
3. Open the endshield. For instructions, refer to *Opening Endshields, page 37*.
4. Remove the breather/dipstick (A) and the drain plug (B).
5. Allow the oil to drain from the knife drive box and into the container placed below it.
6. Reinstall the drain plug (B).
7. Add oil to the knife drive box. Refer to inside back cover for recommended fluids and lubricants.
8. Close the endshield. For instructions, refer to *Closing Endshields, page 38*.

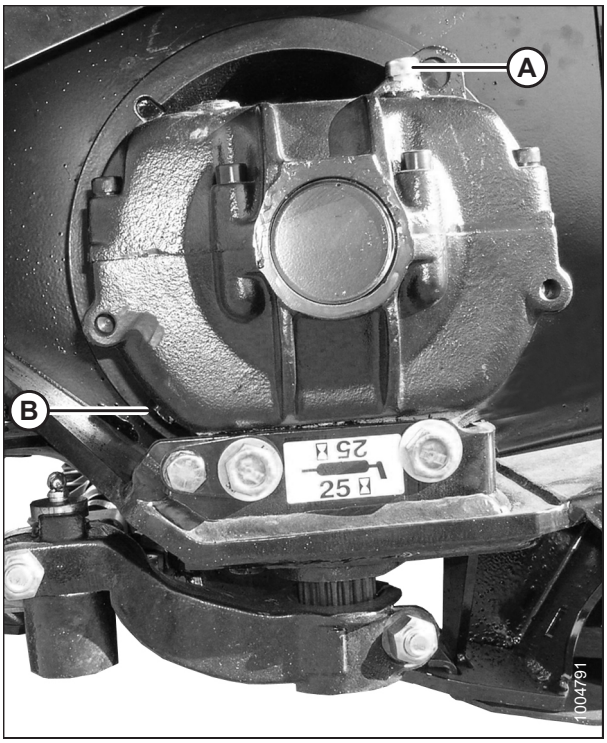

Figure 5.131: Knife Drive Box

5.9.2 Knife Drive Belts

Non-Timed Knife Drive Belts

The knife drive box is driven by a V-belt that is powered by a hydraulic motor on the header left endsheet. There is an identical drive system at the opposite end of 12.2 m and 13.7 m (40 ft. and 45 ft.) double-knife headers.

Removing Single- and Untimed Double-Knife Drive Belts

The is the same for both sides of a double-knife header.

DANGER

To avoid bodily injury or death from unexpected startup of machine, always stop the engine and remove the key before making adjustments to the machine.

1. Shut down the engine, and remove the key from the ignition.
2. Open the endshield. For instructions, refer to *Opening Endshields, page 37*.
3. Loosen the two bolts (A) securing the motor assembly to the header endsheet.
4. Loosen the belt tension by turning tensioning bolt (B) counterclockwise.

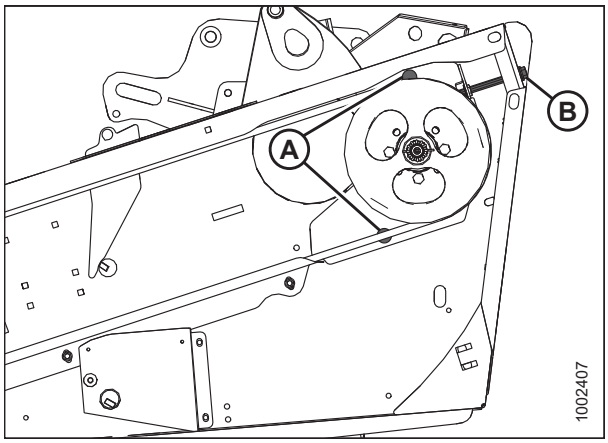

Figure 5.132: Knife Drive

5. To provide clearance between the knife drive box pulley and the endsheet, open access cover (A) on the endsheet behind the cutterbar.

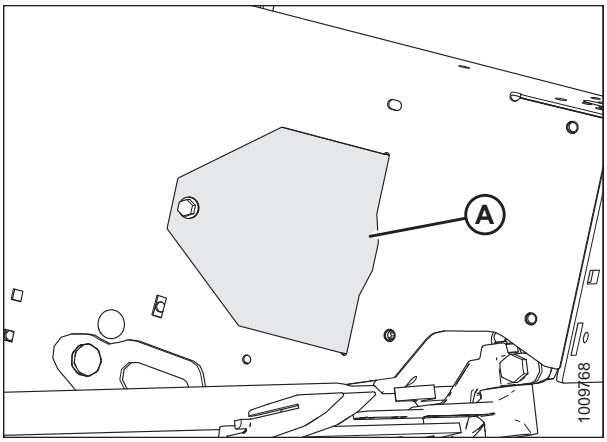

Figure 5.133: Access Cover

6. Remove belt (A) from drive pulley (B).
7. Slip belt (A) over and behind knife drive box pulley (C). Use the notch in the pulley to assist with belt removal.

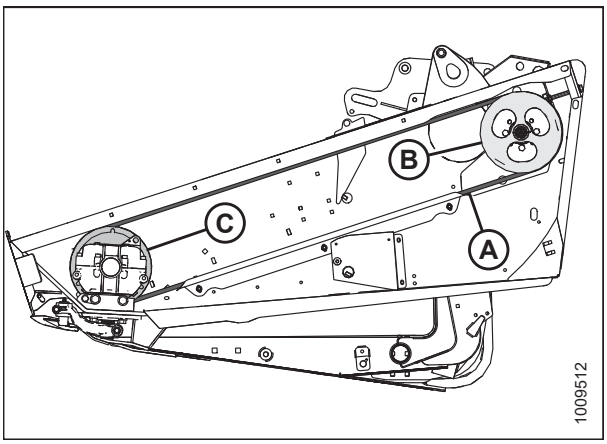

Figure 5.134: Knife Drive

Installing Single- and Untimed Double-Knife Drive Belts

The procedure for installing untimed double-knife drive belts is the same for both sides of the header.

DANGER

To avoid bodily injury or death from unexpected startup of machine, always stop the engine and remove the key before making adjustments to the machine.

1. Shut down the engine, and remove the key from the ignition.
2. Route knife drive belt (A) around knife drive box pulley (C) and knife drive pulley (B). Use the notch in the pulley to assist with the belt installation.

   NOTE:

   Ensure the drive motor is fully forward. Do **NOT** pry the belt over the pulley.

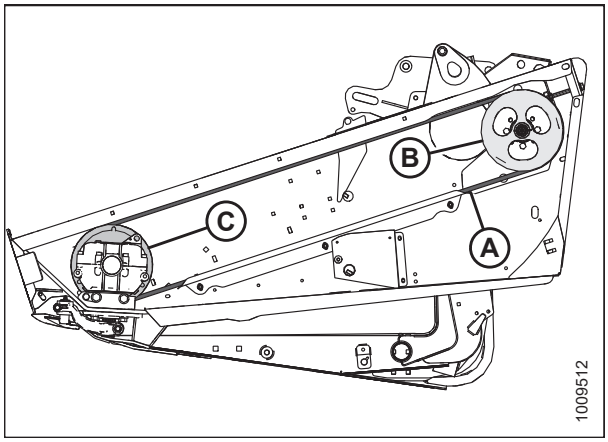

Figure 5.135: Knife Drive

3. Tension the knife drive belt. For instructions, refer to *Checking and Tensioning, page 513*.
4. Install access cover (A) and secure with bolt.
5. Close the endshield. For instructions, refer to *Closing Endshields, page 38*.

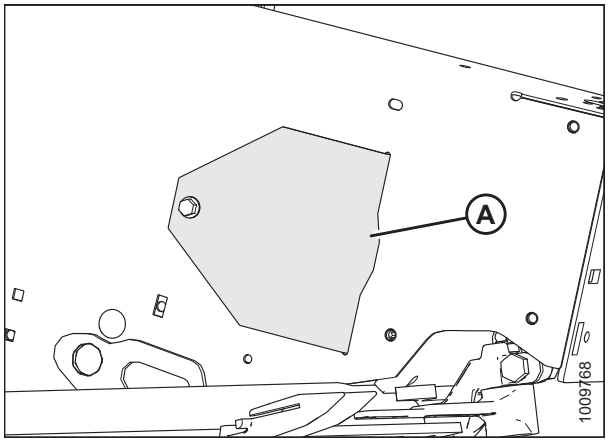

Figure 5.136: Access Cover

Checking and Tensioning

DANGER

To avoid bodily injury or death from unexpected startup of machine, always stop the engine and remove the key before making adjustments to the machine.

IMPORTANT:

To prolong the belt and drive life, do **NOT** overtighten the belt.

1. Shut down the engine, and remove the key from the ignition.
2. Open the left endshield. For instructions, refer to *Opening Endshields, page 37*.
3. Loosen two bolts (A) securing the motor assembly to the header endsheet.

   NOTE:

   The belt guide has been removed from the illustrations for clarity.
4. Check drive belt tension. A properly tensioned drive belt (C) should deflect 24–28 mm (15/16–1 1/8 in.) when 133 N (30 lbf) of force is applied at the midspan.
5. If the belt needs to be tensioned, turn adjuster bolt (B) clockwise to move the drive motor until proper tension is set.

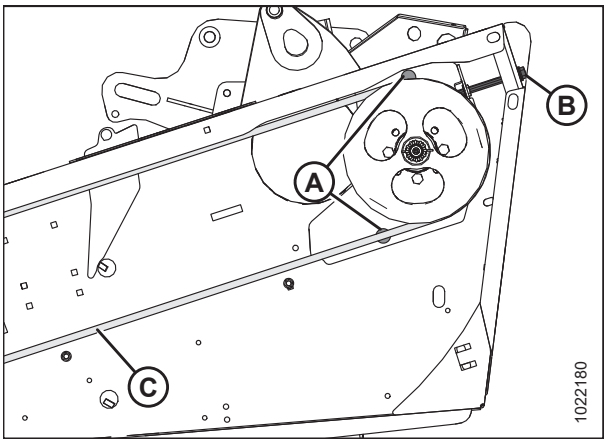

Figure 5.137: Knife Drive

6. Ensure clearance between belt (A) and belt guide (B) is 1 mm (1/16 in.).
7. Loosen three bolts (C), and adjust the position of guide (B) as required.
8. Tighten three bolts (C).
9. Close the endshield. For instructions, refer to *Closing Endshields, page 38*.

   NOTE:

   Readjust the tension of a new belt after a short run-in period (about 5 hours).
10. **Double-knife headers only:** Repeat procedure on the other side of the header.

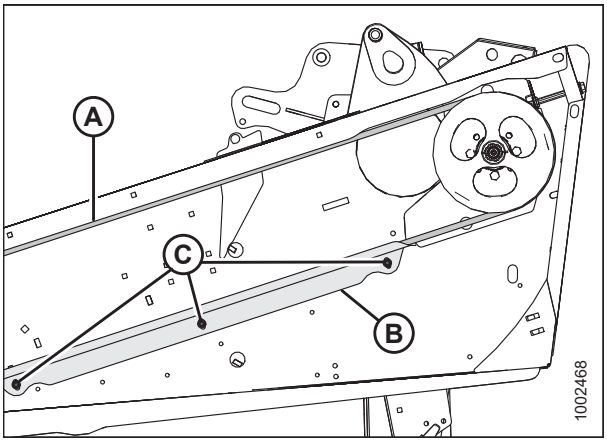

Figure 5.138: Knife Drive

Timed Double-Knife Drive Belts

Removing Timed Drive V-Belts

DANGER

To avoid bodily injury or death from unexpected startup of machine, always stop the engine and remove the key before making adjustments to the machine.

1. Shut down the engine, and remove the key from the ignition.
2. Open the endshield. For instructions, refer to *Opening Endshields, page 37*.
3. Loosen the two bolts (A) securing the motor assembly to the header endsheet.
4. Turn adjuster bolt (B) counterclockwise to loosen and remove the two V-belts (C).

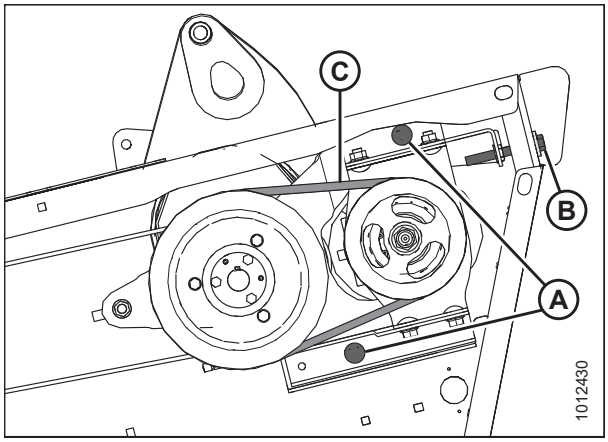

Figure 5.139: Knife Drive V-Belts

Installing Timed Drive V-Belts

NOTE:

Install new V-belts in matching pairs.

DANGER

To avoid bodily injury or death from unexpected startup of machine, always stop the engine and remove the key before making adjustments to the machine.

1. Shut down the engine, and remove the key from the ignition.
2. Position V-belts (C) onto the pulleys.

   NOTE:

   Ensure the drive motor is fully forward. Do **NOT** pry the belts over the pulley.
3. Turn adjuster bolt (B) clockwise to tighten the V-belts. A properly tensioned V-belt should deflect 4 mm (5/32 in.) when a force of 52–77 N (12–17 lbf) is applied at midspan.

   IMPORTANT:

   To prolong the life of V-belts and drives. Do **NOT** overtighten the V-belts.
4. Tighten the two bolts (A) on the endsheet.
5. Close the endshield. For instructions, refer to *Closing Endshields, page 38*.
6. Check the tension of the new V-belts after a short run-in period (about 5 hours).

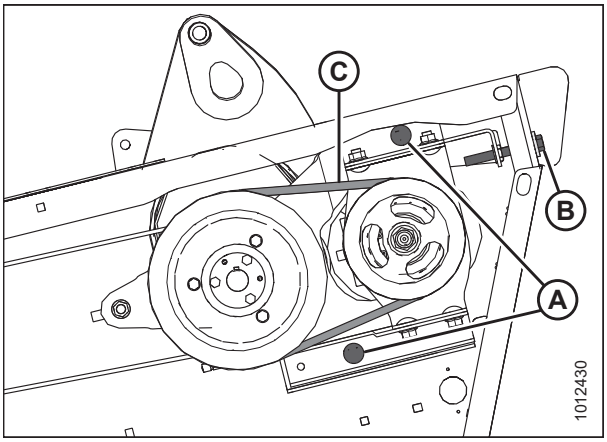

Figure 5.140: Knife Drive V-Belts

Removing Timed Knife Drive Belt

The timed knife drive belt removal procedure is the same for both sides of the header.

DANGER

To avoid bodily injury or death from unexpected startup of machine, always stop the engine and remove the key before making adjustments to the machine.

1. Shut down the engine, and remove the key from the ignition.
2. Open the endshield. For instructions, refer to *Opening Endshields, page 37*.
3. Loosen two nuts (A) on the belt idler bracket to relieve the belt tension.
4. Loosen nut (B) on the idler pulley and slide the idler downwards to loosen the belt.

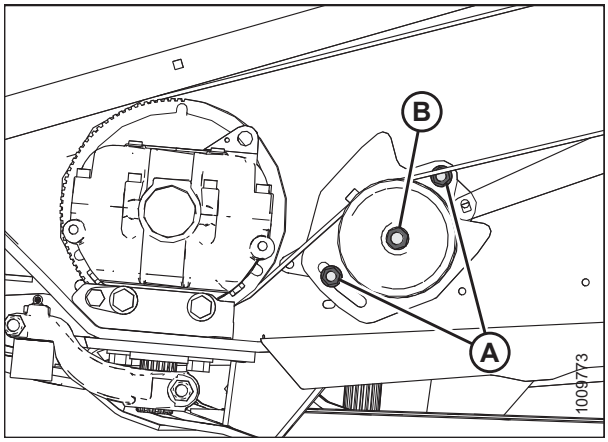

Figure 5.141: Knife Drive

NOTE:

The following two steps apply only to the left side drive.

5. Loosen two bolts (A) on the endsheet.
6. Turn adjuster bolt (B) counterclockwise to loosen, and remove two V-belts (C).

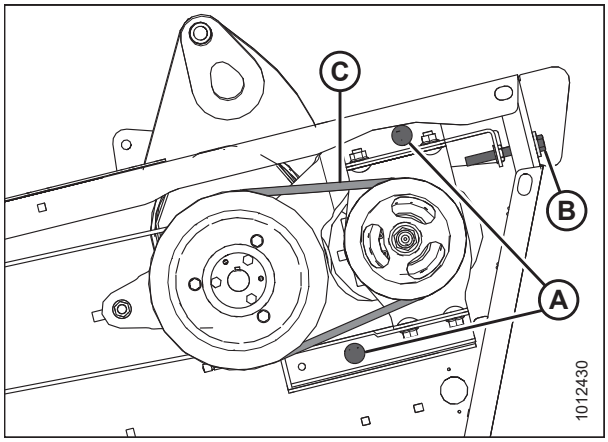

Figure 5.142: Knife Drive V-Belts

7. Open access cover (A) on the endsheet behind the cutterbar to provide clearance between the knife drive box pulley and the endsheet.
8. Remove the knife drive belt.

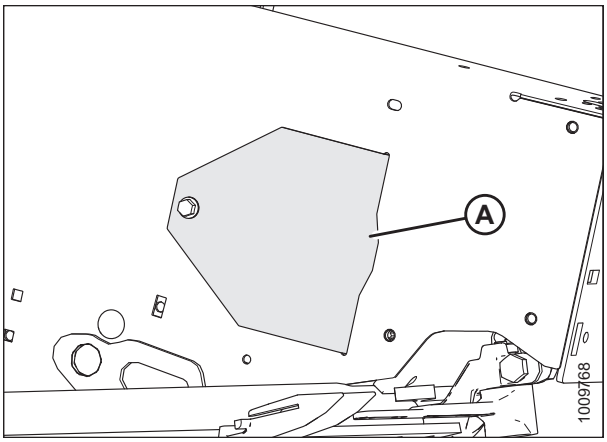

Figure 5.143: Access Cover

Installing Timed Knife Drive Belt

The procedure for installing timed knife drive belts is the same for both sides of the header.

DANGER

To avoid bodily injury or death from unexpected startup of machine, always stop the engine and remove the key before making adjustments to the machine.

1. Shut down the engine, and remove the key from the ignition.
2. Route knife drive belt (A) around pulley (B) and knife drive box pulley (C).

   NOTE:

   Ensure the drive motor is fully forward. Do **NOT** pry the belt over the pulley.

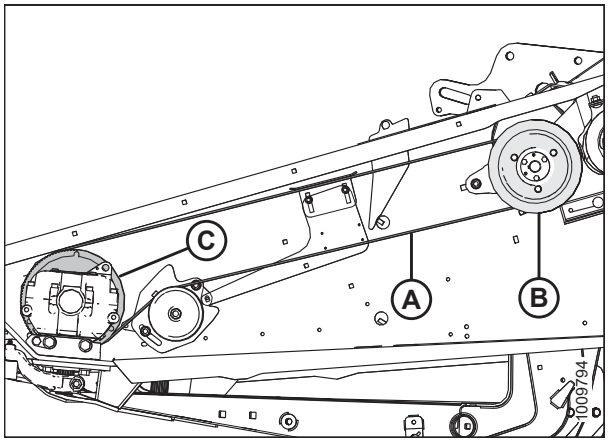

Figure 5.144: Timed Knife Drive Belt – Left Shown

3. Install V-belts (C) onto the pulleys.

   NOTE:

   Ensure the drive motor is fully forward, do **NOT** pry the belts over the pulley.

4. Turn adjuster bolt (B) clockwise to tighten the V-belts. A properly tensioned V-belt should deflect 4 mm (5/32 in.) when a force of 52–77 N (12–17 lbf) is applied at the midspan.

   IMPORTANT:

   To prolong the life of V-belts and drives, do **NOT** overtighten the V-belts.

   NOTE:

   If the belt is out of alignment, refer to *Adjusting Tracking for Timed Double-Knife Belt, page 524*.

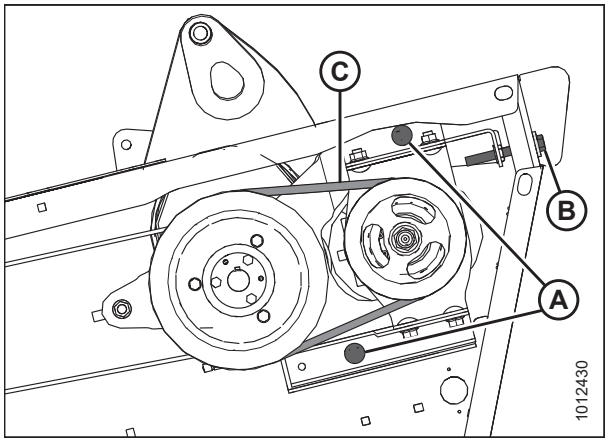

Figure 5.145: Knife Drive V-Belts

5. Tighten the two bolts (A) on the endsheet.

6. Ensure the knives are timed before tightening the belt. For instructions, refer to *Adjusting Timed Double-Knife Timing, page 521*.
7. Slide idler pulley (A) up the slot on support bracket (B) to take up the slack in the timing belt.

   NOTE:

   Ensure nut (C) is as high as possible in the slot on support bracket (B).
8. Tighten nut (D) to 212–234 Nm (157–173 lbf·ft).

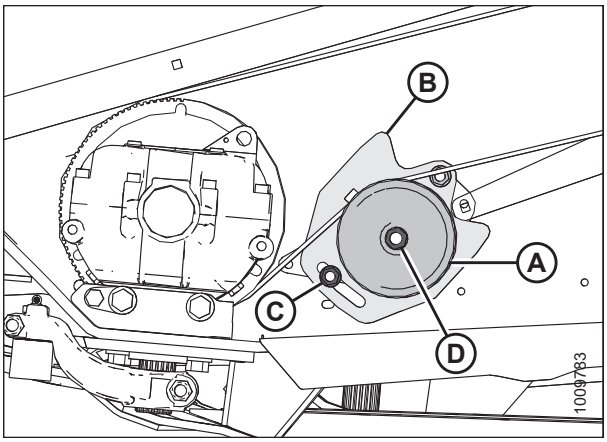

Figure 5.146: Knife Drive

9. Tension the knife drive belt. For instructions, refer to *Checking and Tensioning Timed Double-Knife Drive Belts, page 519*.
10. Install access cover (A) and secure with bolt.
11. Close the endshield. For instructions, refer to *Closing Endshields, page 38*.

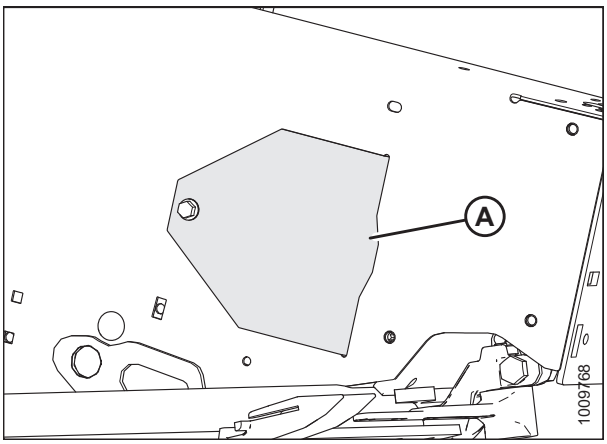

Figure 5.147: Access Cover

Checking and Tensioning Timed Double-Knife Drive Belts

The procedure for tensioning timed knife drive belts is the same for both sides of the header. The illustrations show the left side of the header.

DANGER

To avoid bodily injury or death from unexpected startup of machine, always stop the engine and remove the key before making adjustments to the machine.

IMPORTANT:

To prolong belt and drive life, do **NOT** overtighten belt.

IMPORTANT:

Do **NOT** use the adjuster bolt at the drive pulley to adjust timing belt tension.

1. Shut down the engine, and remove the key from the ignition.
2. Open the endshield. For instructions, refer to *Opening Endshields, page 37*.

3. Check drive belt tension. A properly tensioned belt (A) should deflect 13 mm (1/2 in.) at the midpoint of the upper span when a force of 27 N (6 lbf) is applied.

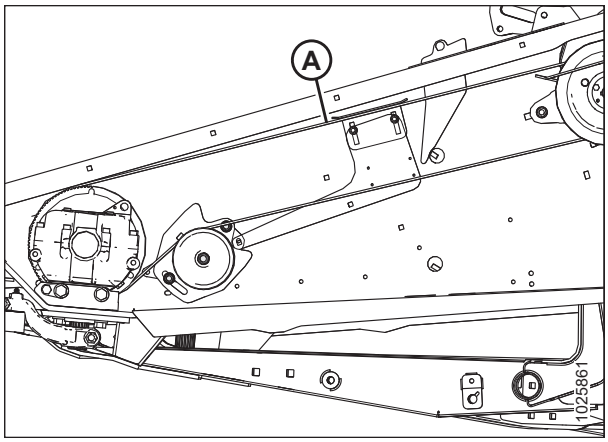

Figure 5.148: Knife Drive – Left Side

4. If the belt needs to be tensioned, loosen two nuts (A) on knife drive belt idler bracket (B).
5. Position pry bar (C) under the idler bracket, and push the bracket upwards until a force of 27 N (6 lbf) deflects the belt 13 mm (1/2 in.) at the midpoint of the upper span.

   IMPORTANT:

   Protect the machine's paint by placing a piece of wood (D) under pry bar (C).

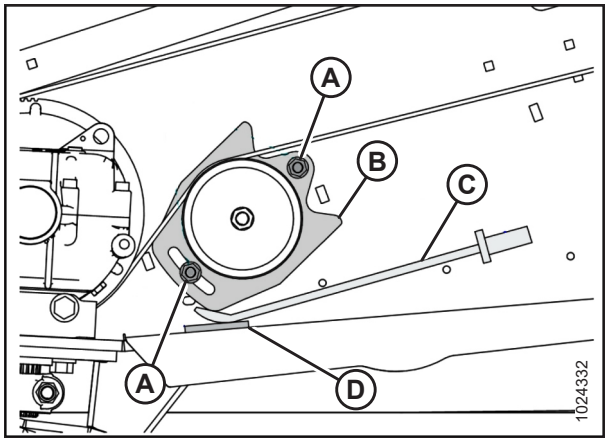

Figure 5.149: Knife Drive – Left Side

6. After achieving the proper belt tension, tighten nuts (C) to 73–80 Nm (54–59 lbf·ft).
7. Remove pry bar (A) and piece of wood (B).
8. Readjust the tension of a new belt after a short run-in period (about 5 hours).

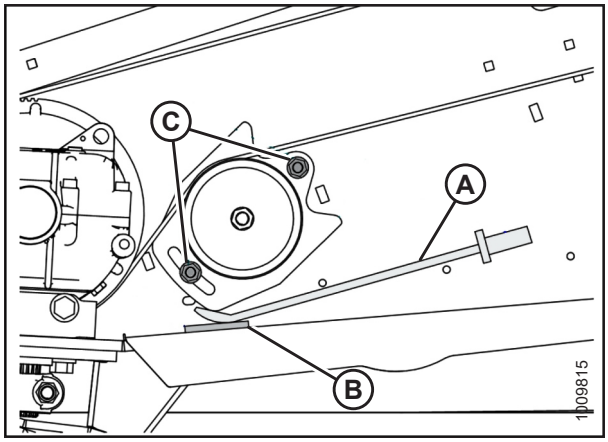

Figure 5.150: Knife Drive – Left Side

9. Ensure clearance (A) between belt (B) and guide (C) is 0.5–1.5 mm (1/32–1/16 in.).
10. Loosen bolts (D) and adjust the guide if necessary. Tighten bolts.
11. Close the endshield. Refer to *Closing Endshields, page 38*.
12. Repeat procedure for the opposite side of the header.

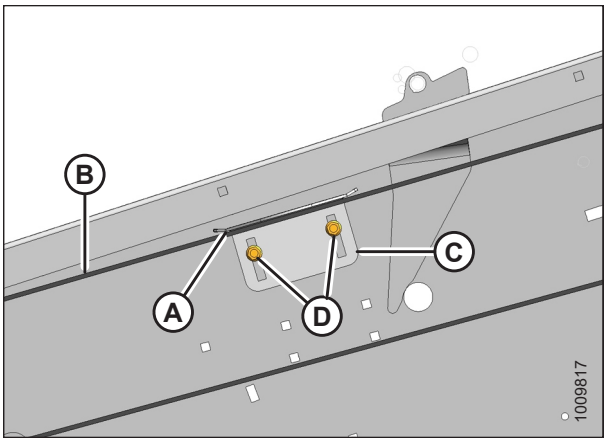

Figure 5.151: Belt Guide – Left Side

Adjusting Timed Double-Knife Timing

Timed double-knife drive headers (10.7 m [35 ft.] and smaller) require the knives to be properly timed to move in opposite directions.

DANGER

To avoid bodily injury or death from unexpected startup of machine, always stop the engine and remove the key before making adjustments to the machine.

1. Shut down the engine, and remove the key from the ignition.
2. Open both endshields. For instructions, refer to *Opening Endshields, page 37*.
3. Remove the right belt. For instructions, refer to *Removing Timed Knife Drive Belt, page 516*.
4. Rotate the left knife drive box-driven pulley clockwise until left knife (A) is at the center of inboard stroke (B) (moving towards the center of the header).

   NOTE:

   The center stroke is when knife sections (C) are centered between the guard points.

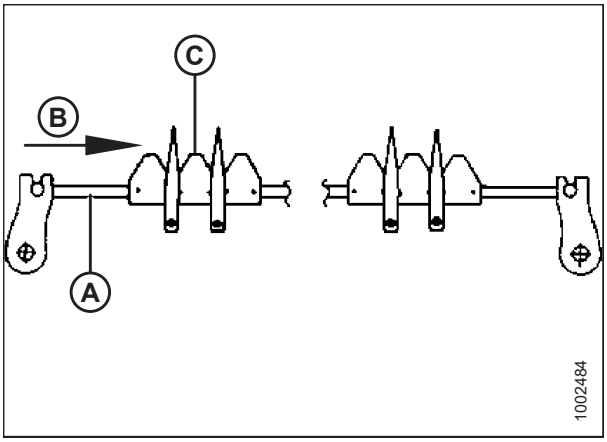

Figure 5.152: Adjusting Timing – Left Side

5. Rotate the right knife drive box pulley counterclockwise until right knife (A) is at the center of inboard stroke (B) (moving towards the center of the header).

   NOTE:

   The center stroke is when knife sections (C) are centered between the guard points.

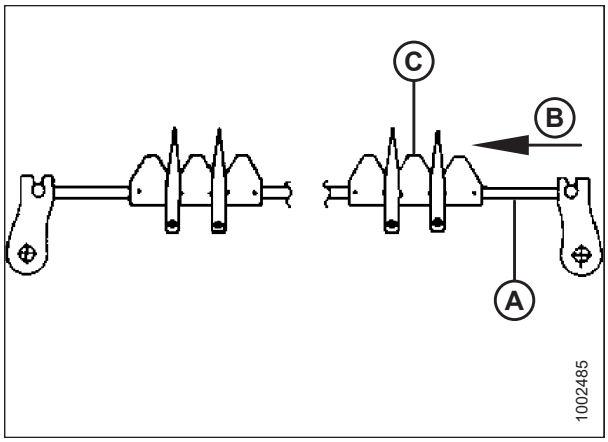

Figure 5.153: Adjusting Timing – Right Side

6. Install right belt (A).

   NOTE:

   Ensure the knife drive box drive pulley and driven pulley do **NOT** rotate during belt installation.

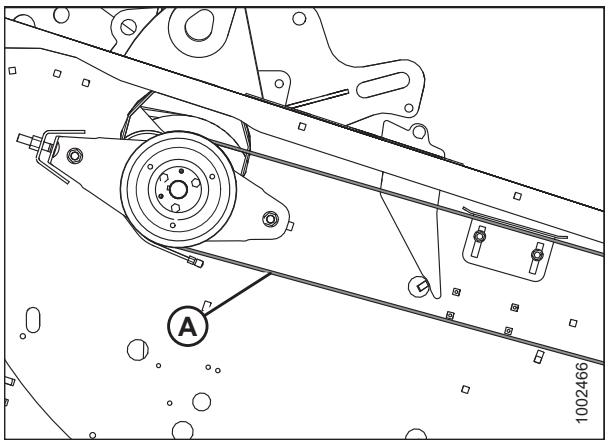

Figure 5.154: Knife Drive – Right Side

7. Slide idler pulley (A) up by hand to remove most of the belt slack. Tighten nut (B).
8. Rotate idler pulley bracket (A) downwards, and slide the idler pulley up by hand to remove most of the belt slack. Tighten nut (B).

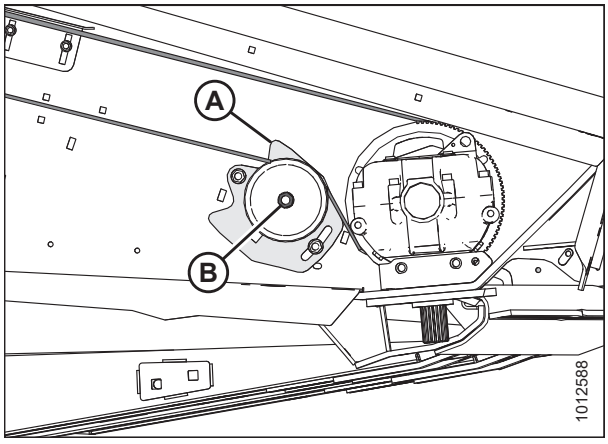

Figure 5.155: Knife Drive – Right Side

9. Position pry bar (A) under idler bracket (C), and push the bracket upwards until a force of 27 N (6 lbf) deflects the belt 13 mm (1/2 in.) at the midpoint of the upper span.

   IMPORTANT:

   Protect the paint by placing a piece of wood (B) under pry bar (A).

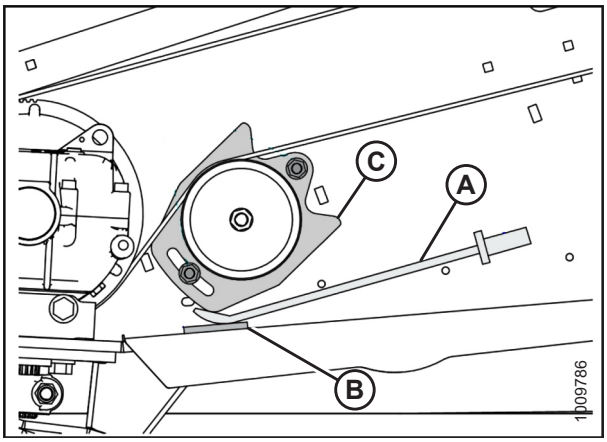

Figure 5.156: Idler Bracket – Left Side

10. Tighten nuts (C) to 73–80 Nm (54–59 lbf·ft) after achieving the proper belt tension.
11. Ensure the timing belts are properly seated in the grooves on both driver and driven pulleys.
12. To check for correct knife timing, rotate the drive slowly by hand, and observe where the knives overlap at the center of the header.

    IMPORTANT:

    The knives must begin moving at the exact same time, and must move in opposite directions.

13. If necessary, adjust the knife timing by loosening right drive belt (B) just enough to reposition pulley (A) to the next cog(s), and proceed as follows:

    a. If the right knife leads the left knife, rotate right driven pulley (A) clockwise.

    b. If the right knife lags the left knife, rotate right driven pulley (A) counterclockwise.

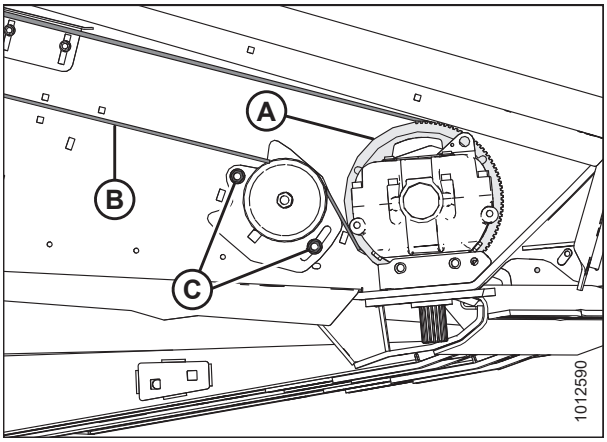

Figure 5.157: Knife Drive – Right Side

14. Ensure the drive pulleys do not rotate, and tension the right drive belts (refer to Steps *8, page 522* to *10, page 523*).

    IMPORTANT:

    Do **NOT** use the adjuster bolt at the drive pulley to adjust the timing belt tension.

15. Recheck the timing (refer to Step *12, page 523*) and readjust if necessary (refer to Step *13, page 523*).
16. Close both endshields. Refer to *Closing Endshields, page 38*.

Adjusting Tracking for Timed Double-Knife Belt

The procedure for adjusting the belt tracking so it is the same on both sides of timed double-knife headers.

Two people are required for this procedure—one to operate the combine and header, and the other to observe and adjust the belt tracking.

IMPORTANT:

Belts that are not tracking properly are subject to premature failure; ensure the pulleys are aligned and parallel. Follow the belt tensioning procedures in this manual to prevent misalignment.

Cogged timing belts should be centered on the knife drive box pulley and positioned at least 2 mm (3/32 in.) from either edge of the pulley when the header is running (a gap should be visible between the belt and the edge of the pulley).

NOTE:

The belt should not make continuous contact with the flanges of the drive pulley, but occasional contact is acceptable.

WARNING

To avoid injury or death from unexpected start-up of machine, always stop the engine and remove the key from the ignition before leaving the operator's seat for any reason.

1. Shut down the combine engine and remove the key from the ignition.
2. Open both endshields. For instructions, refer to *Opening Endshields, page 37*.

CAUTION

Exercise extreme care when operating the header with the endshields open.

3. Operate the header. Observe the belt tracking on both the drive pulley and the knife drive box pulley on both sides of the header.
4. Shut down the engine, and remove the key from the ignition.
5. If the belt is tracking towards the inboard side of the drive pulley, the likely cause is a toe-out problem (A) and (B). If the belt tends to move towards the low tension [inboard] side of the pulley, proceed to Step *8, page 525*.
6. If the belt is tracking towards the outboard side of the drive pulley, the likely cause is a toe-in problem (C) and (D). If the belt tends to move towards the high tension [outboard] side of the pulley, proceed to Step *8, page 525*.

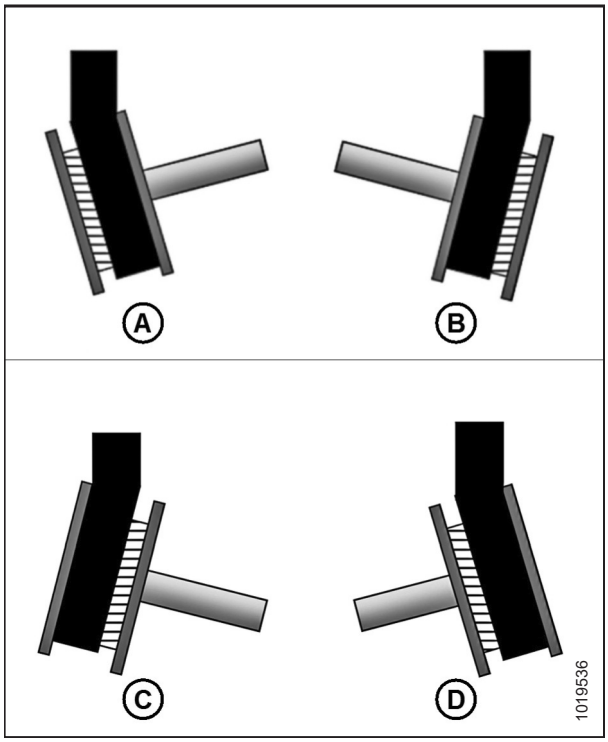

Figure 5.158: Knife Drive Pulley

7. If belt (A) is tracking to one side of the knife drive box pulley (B), the likely cause is an out-of-position idler pulley (C). Proceed to Step *10, page 526*.

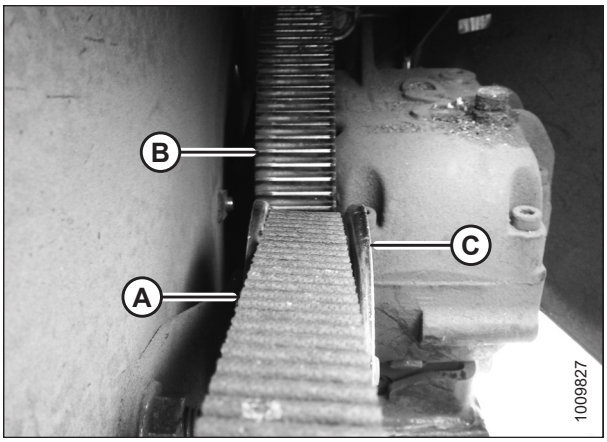

Figure 5.159: Knife Drive Belt

8. If there is a tracking problem on the drive pulley, adjust the position of the cross-shaft support tube as follows:
   a. Loosen nut (A) on support assembly (B).
   b. To correct a toe-out condition, slide support assembly (B) rearward in slot (C).
   c. To correct a toe-in condition, slide support assembly (B) forward.
   d. Tighten nut (A).
   e. Operate the header and check the belt tracking. Adjust the support assembly as required.
   f. If belt tracking problems continue, proceed to Step *10, page 526*.

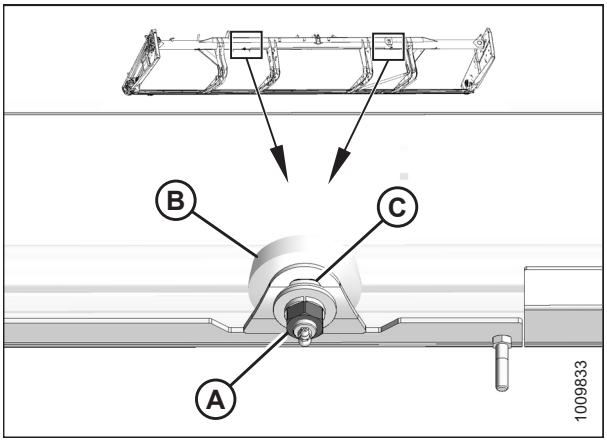

Figure 5.160: Cross-Shaft Support

9. Correct a tracking problem on the knife drive box pulley by adjusting the idler position as follows:
   a. Loosen nuts (A) and (B), and move the bracket and idler until the belt is loose.
   b. Remove nut (B) securing the idler to the bracket, and remove the lock washer, idler pulley, and flat washer.
   c. Install idler pulley (C) using flat washer(s) as required to align the idler pulley with the knife drive box pulley.
   d. Install lock washer (D) and nut (B).
   e. Tension the belt. For instructions, refer to *Checking and Tensioning Timed Double-Knife Drive Belts, page 519*.
   f. Operate the header and check the belt tracking.

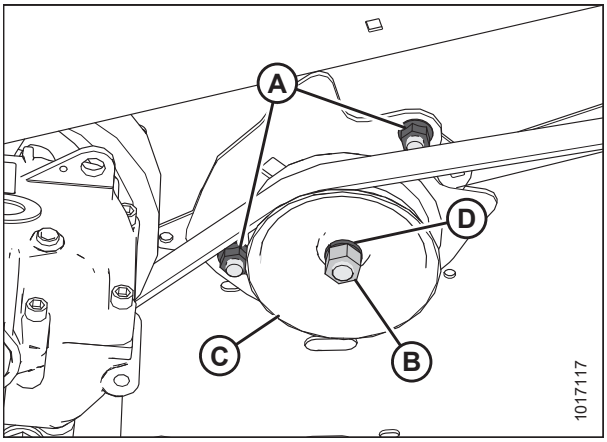

Figure 5.161: Knife Drive

10. If further adjustment is required to correct drive pulley tracking, proceed as follows:

    a. Loosen nut (A) on the idler and nuts (B) on the idler bracket.

    b. Loosen nuts (C) at the drive pulley location.

    c. To correct toe-in problems, turn adjuster bolt (D) clockwise to enable the belt to track inboard.

    d. To correct toe-out problems, turn adjuster bolt (D) counterclockwise to enable the belt to track outboard.

    e. Tighten nuts (C) at the drive pulley location.

    f. Tension the belt. For instructions, refer to *Checking and Tensioning Timed Double-Knife Drive Belts, page 519*.

    g. Operate the header, check the belt tracking, and readjust the drive pulley as necessary.

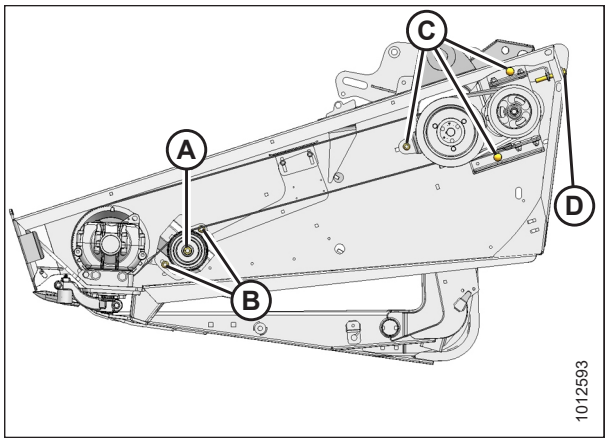

Figure 5.162: Knife Drive – Left Side

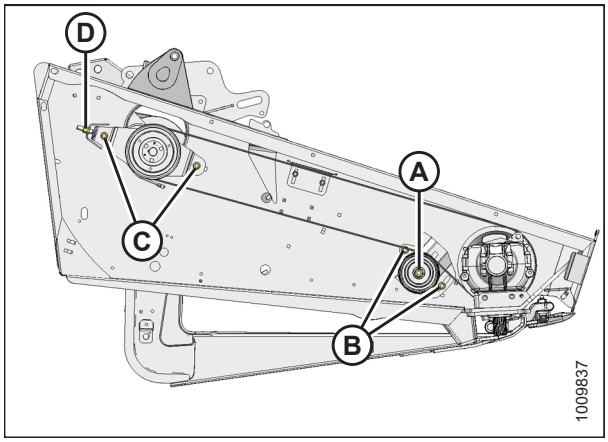

Figure 5.163: Knife Drive – Right Side

5.10 Feed Draper

The feed draper is located on the FM100 Float Module and conveys cut crop to the auger.

CAUTION

To avoid personal injury, before servicing machine or opening drive covers, refer to *5.1 Preparing Machine for Servicing, page 429*.

5.10.1 Replacing Feed Draper

Replace draper if torn, cracked, or missing slats.

DANGER

To avoid bodily injury or death from unexpected start-up or fall of a raised machine, always stop engine and remove key before leaving the operator's seat, and always engage safety props before going under the machine for any reason.

1. Raise header and reel to full height, stop the engine, and remove key from the ignition.
2. Engage reel safety props and header safety props.
3. Loosen jam nut (A) and turn bolt (B) counterclockwise to release the draper tension. Repeat at the opposite side of the header.

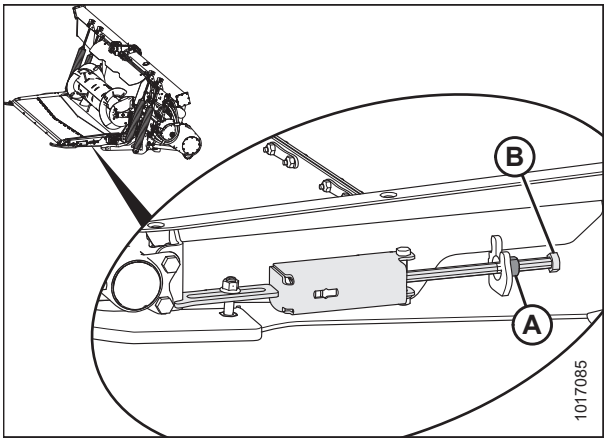

Figure 5.164: Feed Draper Tensioner

4. Unlatch feed deck pan handle (A) from pan handle latch supports (B) on each side of the feed deck. This will drop the door down and allow access to feed deck draper and rollers.

   NOTE:

   Some parts removed from illustration for clarity.

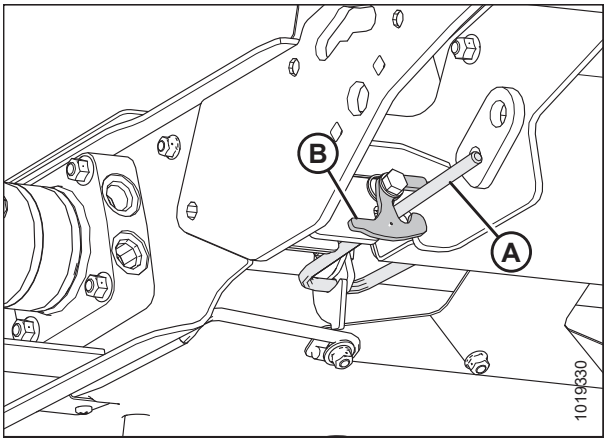

Figure 5.165: Feed Deck Pan Handle and Left Pan Handle Latch

5. Remove nuts and screws (A), and remove draper connector straps (B).
6. Pull the draper from the deck.

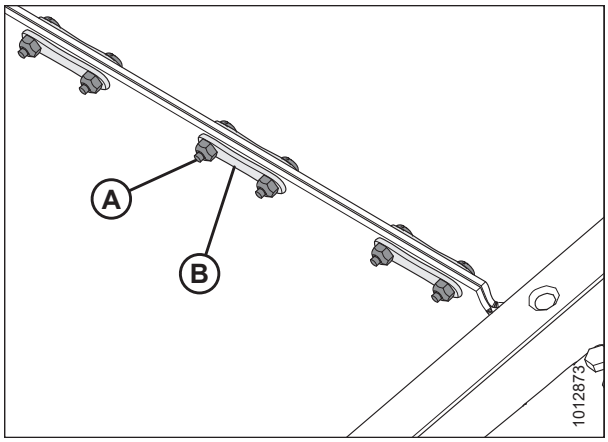

Figure 5.166: Draper Connector

7. Install new draper (A) over drive roller (B). Make sure the draper guides fit into drive roller grooves (C).
8. Pull draper along bottom of feed deck and over idler roller (D).

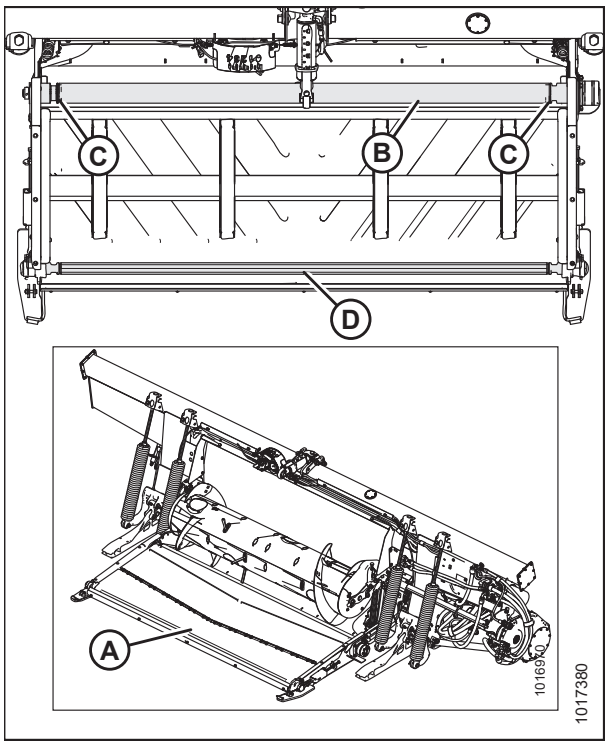

Figure 5.167: Float Module Feed Draper

9. Connect the draper joint with connector straps (B) and secure with nuts and screws (A). Ensure the screw heads face towards the rear of the deck, and tighten only until the end of the screws are flush with the nuts.
10. Adjust the draper tension. For instructions, refer to *5.10.2 Checking and Adjusting Feed Draper Tension, page 530*.

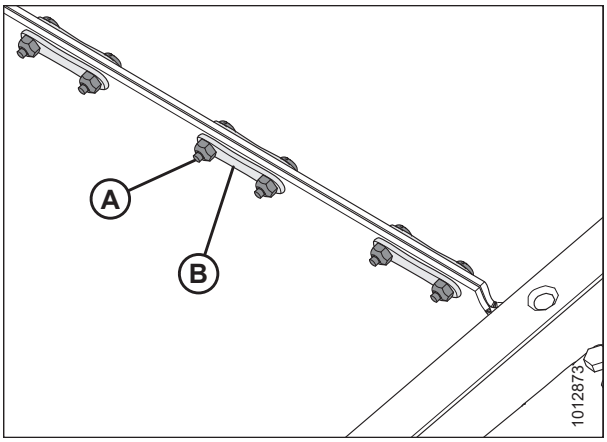

Figure 5.168: Draper Connector Straps

11. Close the feed deck by latching pan handle latch supports (B) on each side of the feed deck to feed deck pan handle (A).

    NOTE:

    Some parts removed from illustration for clarity.

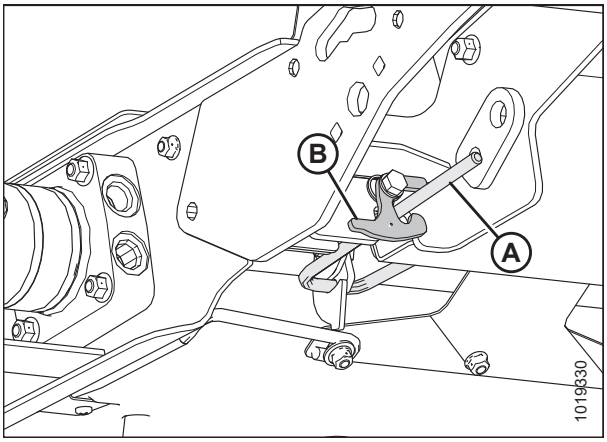

Figure 5.169: Feed Deck Pan Handle and Left Pan Handle Latch

5.10.2 Checking and Adjusting Feed Draper Tension

DANGER

To avoid bodily injury or death from unexpected start-up or fall of a raised machine, always stop engine and remove key before leaving the operator's seat, and always engage safety props before going under the machine for any reason.

1. Raise the header fully.
2. Shut down the engine, and remove the key from the ignition.
3. Engage the header safety props.

Checking draper tension:

4. Ensure the draper guide (the rubber track on the underside of the draper) is properly engaged in the groove on the drive roller, and the idler roller is between the guides.

   NOTE:

   Illustrations show the left side of the float module. The right side is opposite.

   NOTE:

   The default position of spring retainer (A) (white indicator) is centered (B) in the spring box window; however, the position of the spring retainer varies with draper tracking adjustment at the factory.

5. Check the position of white indicator (A). If the feed draper tracks properly and the spring retainers on both sides of the draper are correctly positioned, then no adjustment is necessary.
6. If adjustment is necessary, proceed to Step *7, page 530*.

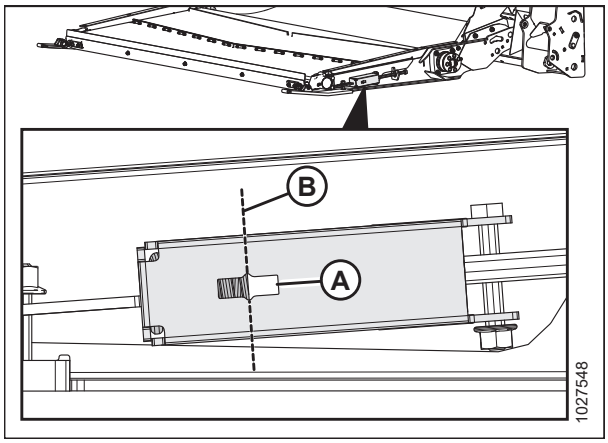

Figure 5.170: Feed Draper Tensioner

Adjusting draper tension:

7. Adjust the draper tension by loosening jam nut (A) and turning bolt (B) clockwise to increase draper tension or turning bolt (B) counterclockwise to decrease draper tension. Draper tension can be adjusted as follows:
   - Loosened to 3 mm (1/8 in.) (D) (aft of center in indicator window [E])
   - Tightened to 6 mm (1/4 in.) (C) (forward of center in indicator window [E])

   IMPORTANT:

   For small tension adjustments, you may need to only adjust one side of the draper. For larger tension adjustments and to avoid uneven draper tracking, you may need to adjust both sides of the draper an equal amount.
8. Tighten jam nut (A).

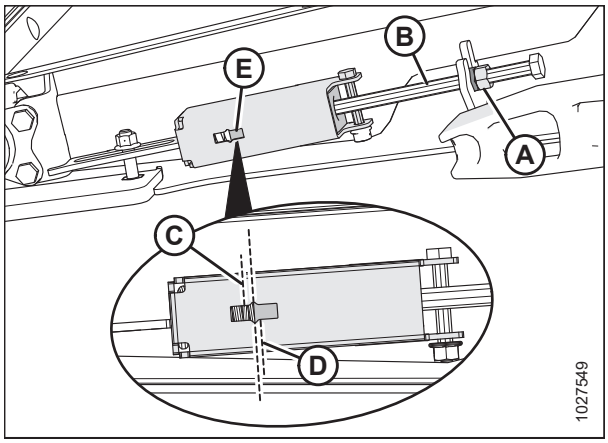

Figure 5.171: Feed Draper Tensioner

5.10.3 Feed Draper Drive Roller

This roller is powered and moves the draper on the float module, conveying crop to the auger.

Removing Feed Draper Drive Roller

DANGER

To avoid bodily injury or death from unexpected start-up or fall of a raised machine, always stop engine and remove key before leaving the operator's seat, and always engage safety props before going under the machine for any reason.

1. Raise the header and reel to full height, stop the engine, and remove the key from the ignition.
2. Engage reel safety props and header safety props.
3. Loosen jam nut (A) and turn bolt (B) counterclockwise to release the draper tension. Repeat at the opposite side of the header.

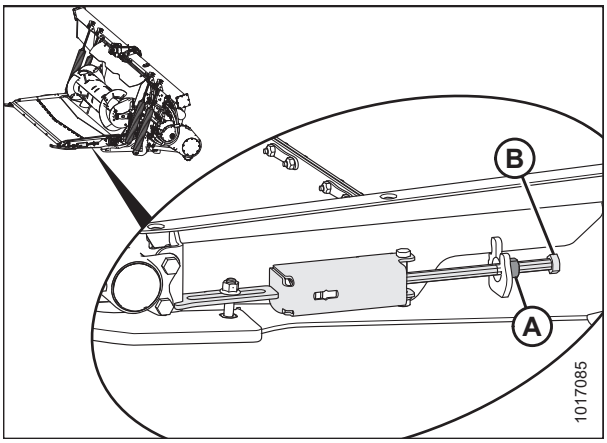

Figure 5.172: Feed Draper Tensioner

4. Remove nuts and screws (A), and remove draper connector straps (B).
5. Pull the draper from the deck.

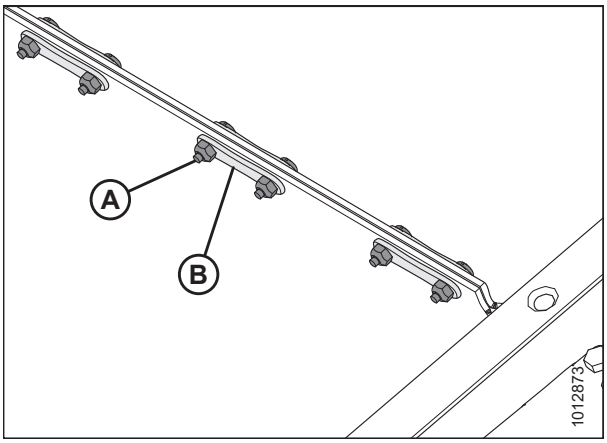

Figure 5.173: Draper Connector

6. Remove two bolts (B) from drive roller cover (A).

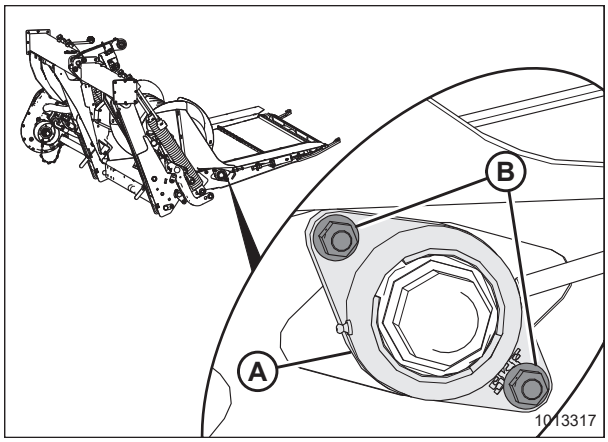

Figure 5.174: Drive Roller Bearing

7. Move drive roller cover plate (A) as shown.

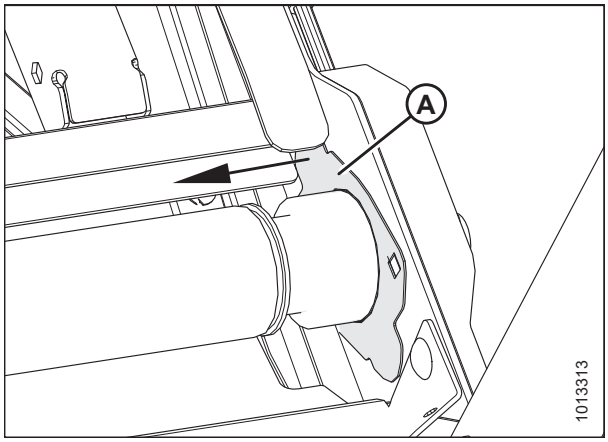

Figure 5.175: Drive Roller

8. Slide drive roller (A) with bearing assembly (B) as shown until left end comes off of spline.

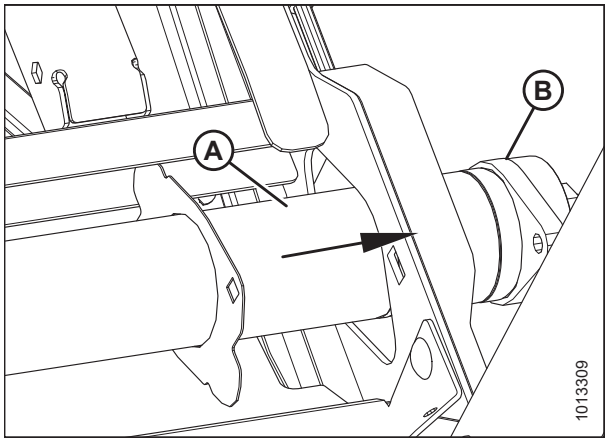

Figure 5.176: Drive Roller

9. Lift left end out of the frame.
10. Slide assembly (A) as shown, guiding bearing housing (B) through frame opening (C).
11. Remove roller (A).

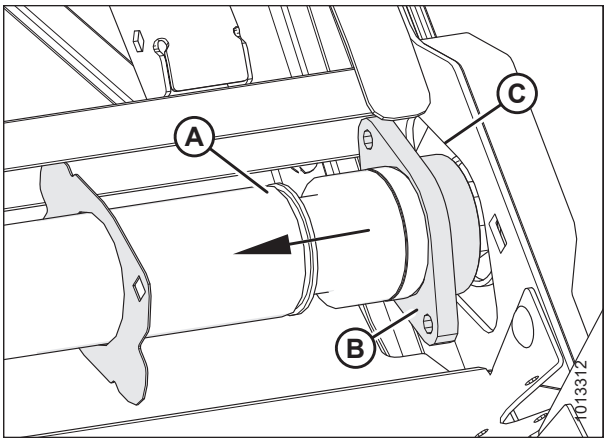

Figure 5.177: Drive Roller

Installing Feed Draper Drive Roller

1. Apply grease to the spline.
2. Slide drive roller cover plate (A) onto end of roller (B) as shown.
3. Guide bearing end (C) of drive roller through frame opening (D).

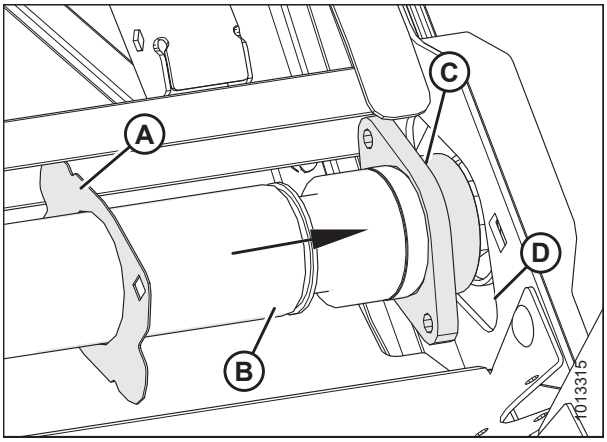

Figure 5.178: Drive Roller – Bearing End

4. Slide left end of drive roller (A) onto motor spline (B) as shown.

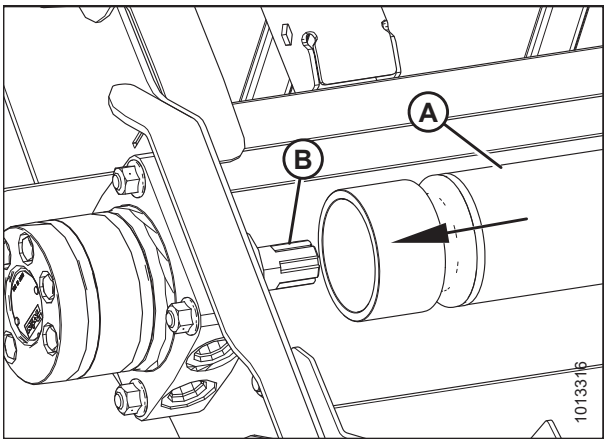

Figure 5.179: Motor

5. Secure bearing and housing (A) with the drive roller cover plate on the frame using two bolts (B).
6. Install the feed deck draper. For instructions, refer to *5.10.1 Replacing Feed Draper, page 527*.
7. Tension the feed draper. For instructions, refer to *5.10.2 Checking and Adjusting Feed Draper Tension, page 530*.

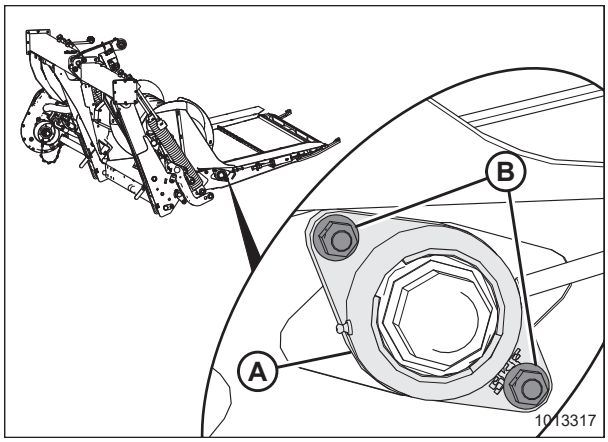

Figure 5.180: Drive Roller Bearing

Replacing Feed Draper Drive Roller Bearing

Removing Feed Draper Drive Roller Bearing

DANGER

To avoid bodily injury or death from unexpected start-up or fall of a raised machine, always stop engine and remove key before leaving the operator's seat, and always engage safety props before going under the machine for any reason.

1. Raise the reel fully.
2. Raise the header fully.
3. Shut down the engine, and remove the key from the ignition.
4. Engage the header safety props.
5. Engage the reel safety props. For instructions, refer to *Engaging Reel Safety Props, page 35*.
6. Loosen jam nut (A) and turn bolt (B) counterclockwise to release the draper tension. Repeat at the opposite side of the header.

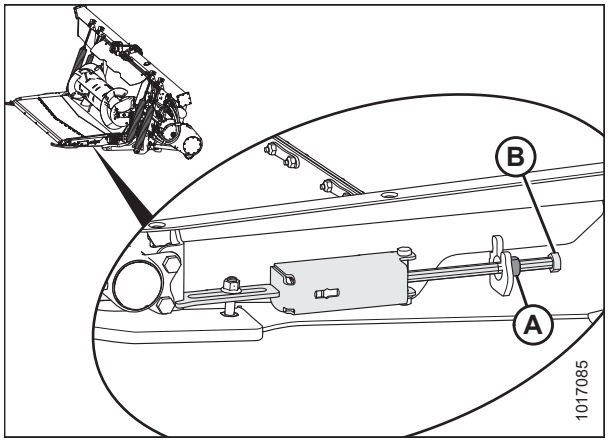

Figure 5.181: Feed Draper Tensioner

7. Loosen set screw (B) on bearing lock (A).
8. Using a hammer and punch, tap bearing lock (A) in the direction opposite to the auger rotation to release the lock.

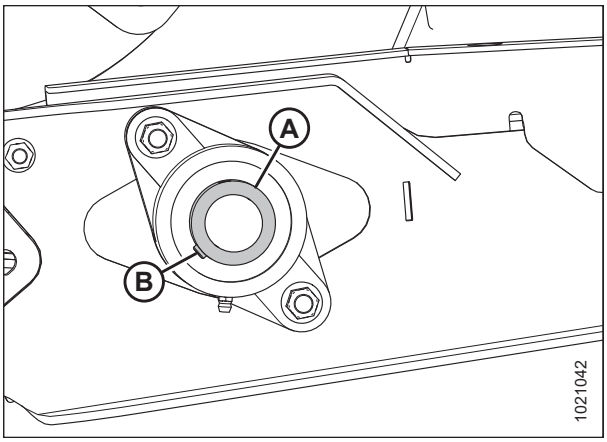

Figure 5.182: Feed Draper Drive Roller Bearing

9. Remove two nuts (A).

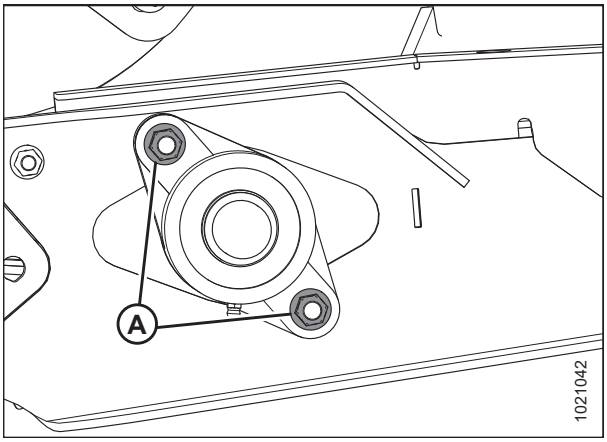

Figure 5.183: Feed Draper Drive Roller Bearing

10. Remove bearing housing (A).

    NOTE:

    If the bearing is seized on the shaft, it may be easier to remove the drive roller assembly. For instructions, refer to *Removing Feed Draper Drive Roller, page 531*.

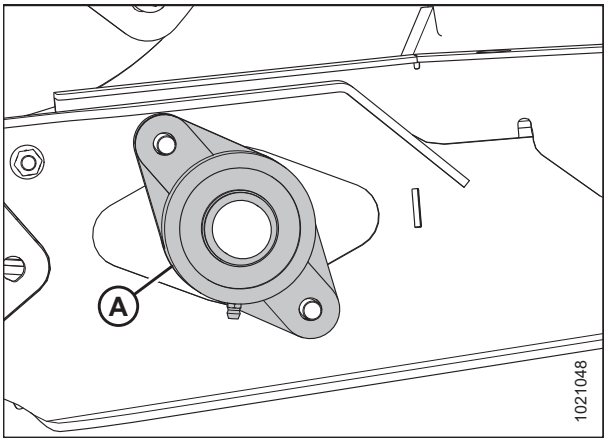

Figure 5.184: Feed Draper Drive Roller Bearing

Installing Feed Draper Drive Roller Bearing

1. Install drive roller bearing housing (A) onto shaft (B), and secure with two bolts and nuts (C).

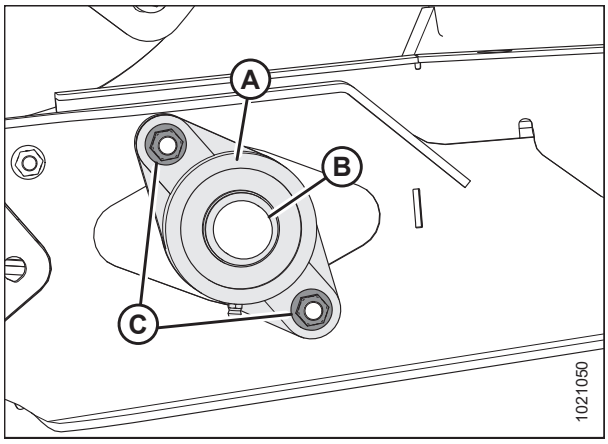

Figure 5.185: Feed Draper Drive Roller Bearing

2. Install bearing lock collar (A) onto the shaft.
3. Using a hammer and punch, tap the bearing lock in the direction of auger rotation to lock.
4. Tighten bearing lock set screw (B).
5. Tension the feed draper. For instructions, refer to *5.10.2 Checking and Adjusting Feed Draper Tension, page 530*.

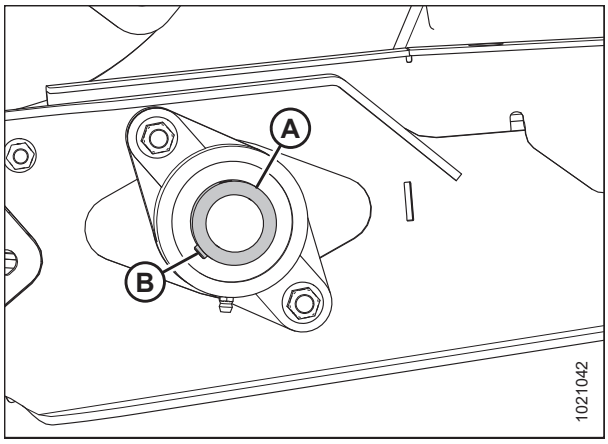

Figure 5.186: Feed Draper Drive Roller Bearing

5.10.4 Feed Draper Idler Roller

This roller is non-powered and driven by the feed draper drive roller. Like the drive roller, it conveys crop across the feed draper to the auger.

Removing Feed Draper Idler Roller

1. Engage the feeder house safety props. For instructions, refer to the combine operator's manual.
2. Loosen jam nut (A) and turn bolt (B) counterclockwise to release the draper tension. Repeat at the opposite side of the header.

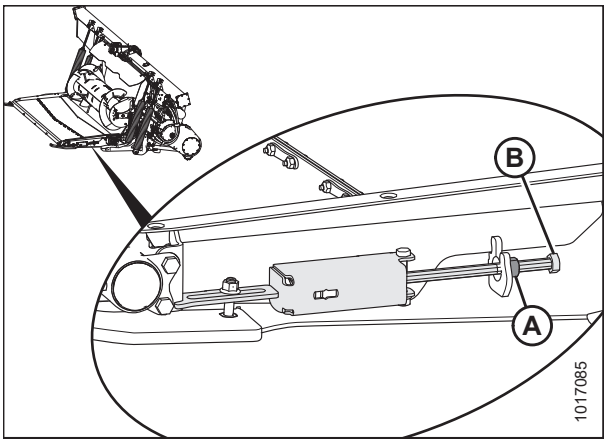

Figure 5.187: Feed Draper Tensioner

3. Remove nuts and screws (A), and remove draper connector straps (B).
4. Open the draper.

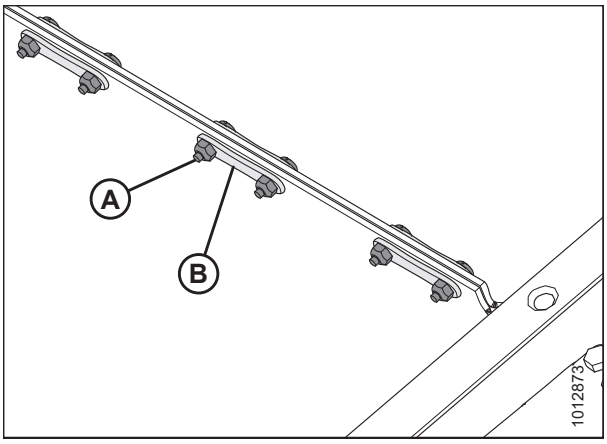

Figure 5.188: Draper Connector

5. Remove nut (D) to have better access to the other two nuts (C).
6. Remove two bolts (A) and nuts (C) from both ends of the idler roller.
7. Remove idler roller assembly (B).

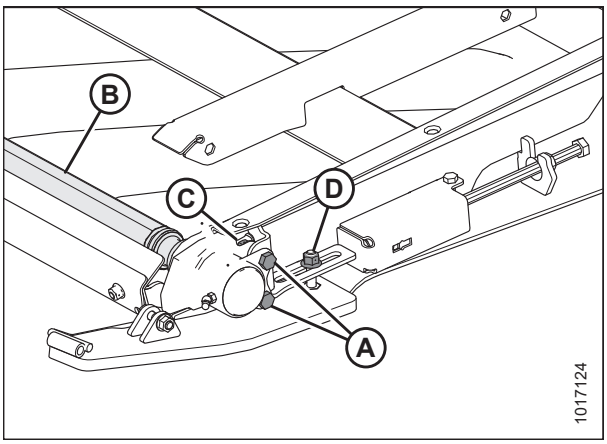

Figure 5.189: Idler Roller

Replacing Feed Draper Idler Roller Bearing

1. Remove dust cap (A).

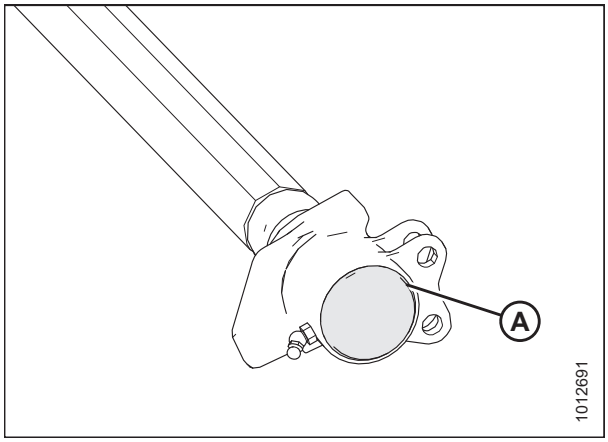

Figure 5.190: Idler Roller

2. Remove nut (A).
3. Use a hammer to tap bearing assembly (B) until it slides off the shaft.

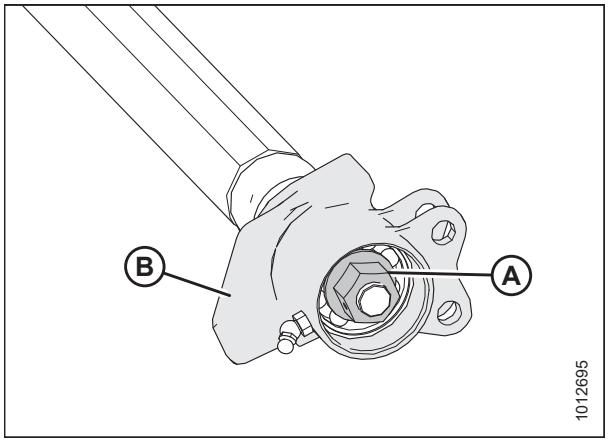

Figure 5.191: Idler Roller

NOTE:

When installing a new bearing, do **NOT** place the opposite end of the roller directly on the ground. Bearing assembly (A) protrudes past roller tube (B), and placing the end on the ground will push the bearing farther into the tube.

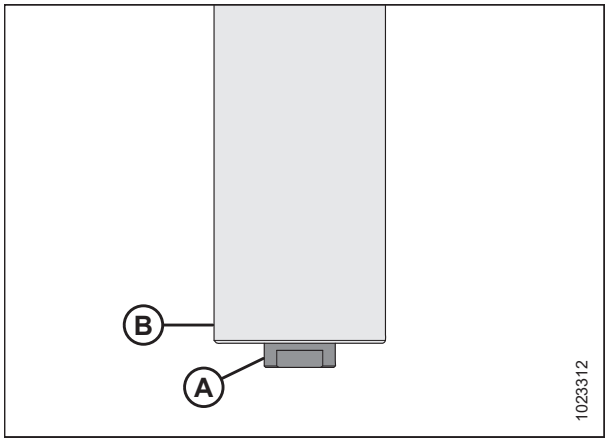

Figure 5.192: Idler Roller

4. Cut a relief (A) into a block of wood.
5. Set the end of idler roller (B) onto the block, with the protruding bearing assembly inside relief (A).

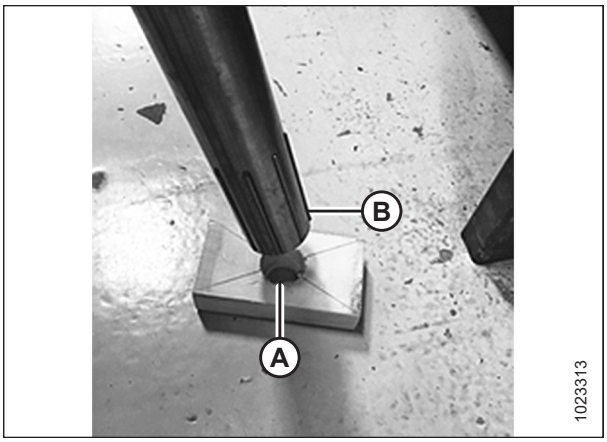

Figure 5.193: Idler Roller

6. Secure housing (D) and remove internal retaining ring (A), bearing (B), and two seals (C).
7. Install seals (C) into housing (D).

   NOTE:

   Ensure the flat side of the seal is facing inward.

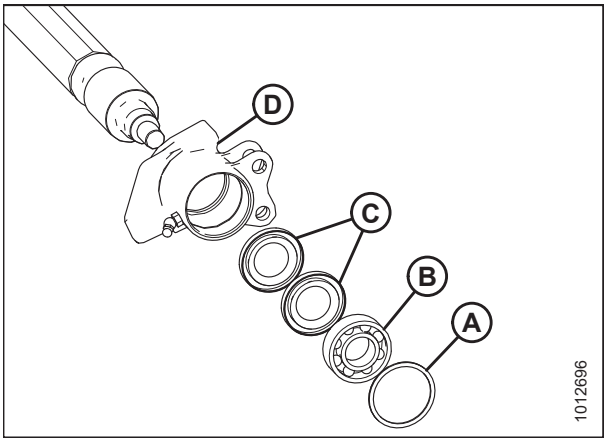

Figure 5.194: Bearing Assembly

8. Install new bearing (C) by pressing on its outer race. Position bearing 14–15 mm (9/16–19/32 in.) (B) from the outside edge of the tube.
9. Fill bore (A) with 8 cc of grease.

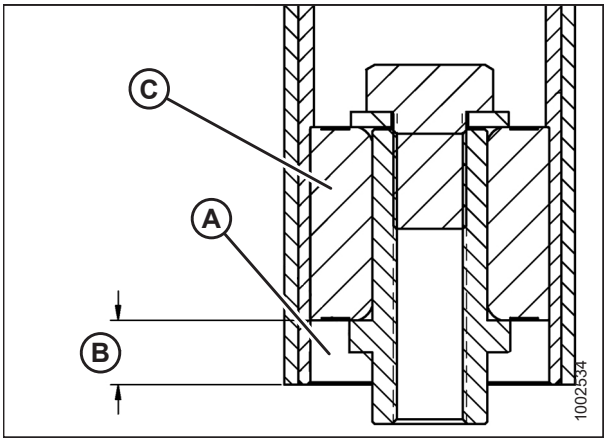

Figure 5.195: Idler Roller Bearing Assembly

10. Using a seal press and hammer, install new retaining ring (A) by pressing on the inner and outer races. Position the ring 3–4 mm (1/8–3/16 in.) (B) from the end of the tube.

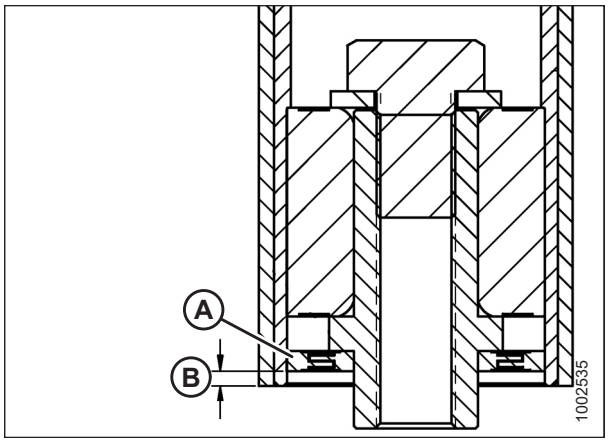

Figure 5.196: Idler Roller Bearing Assembly

11. Brush the shaft with oil. Carefully rotate housing (D) with seals (C), bearing (B), and retaining ring (A) onto the shaft by hand to prevent seal damage.

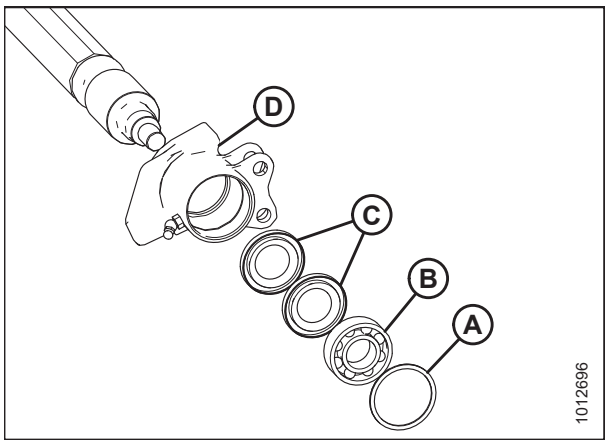

Figure 5.197: Bearing Assembly

12. Secure the bearing assembly to the shaft with nut (A).
13. Fill the bearing cavity with grease, and install dust cap (B).
14. Check that the grease fitting is working.
15. Install the feed draper idler roller on header. For instructions, refer to *Installing Feed Draper Idler Roller, page 541*.

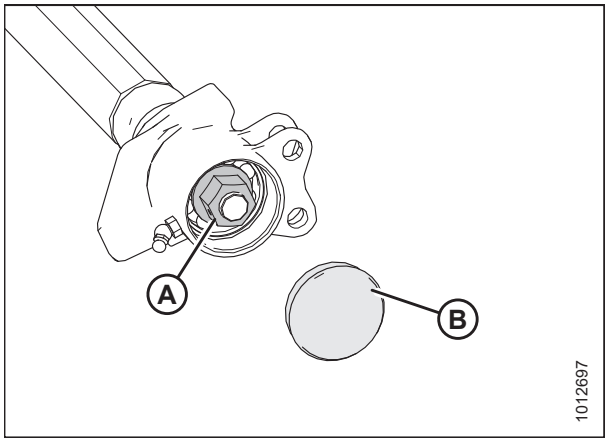

Figure 5.198: Idler Roller

Installing Feed Draper Idler Roller

1. Position idler roller assembly (B) in the float module deck.
2. Install two bolts (A) and nuts (C) at both ends of the idler roller.

   NOTE:

   Do **NOT** overtighten bolts (A).

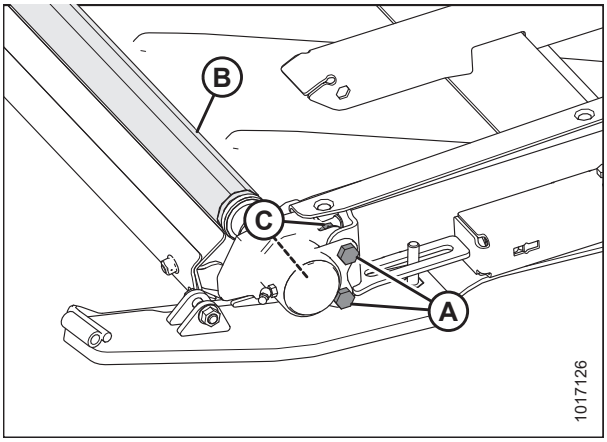

Figure 5.199: Idler Roller

3. Install nut (A).

   IMPORTANT:

   Maintain a 2–4 mm (1/16–3/16 in.) gap (C) between plate (B) and nut (A) to allow the idler roller to float and to move when belt is tensioned or adjusted.

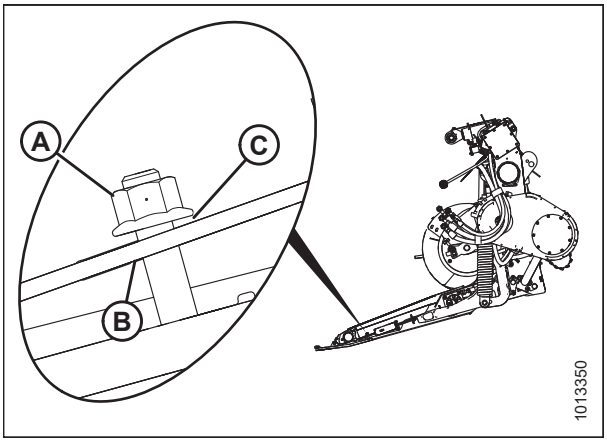

Figure 5.200: Idler Roller

4. Close the feed draper and secure with connector straps (B), screws (A), and nuts.
5. Tension the feed draper. For instructions, refer to *5.10.2 Checking and Adjusting Feed Draper Tension, page 530*.

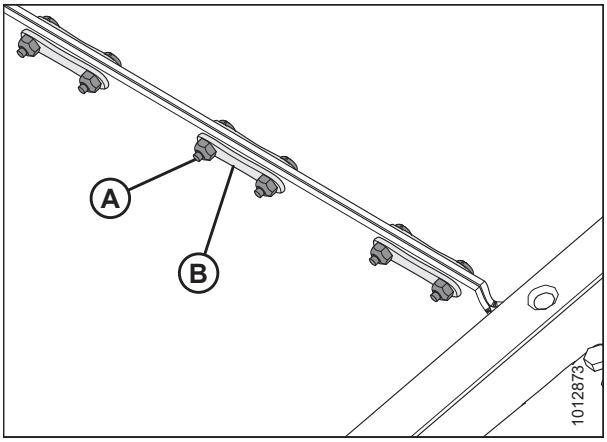

Figure 5.201: Draper Connector

5.10.5 Lowering FM100 Feed Deck Pan

DANGER

To avoid bodily injury or death from unexpected start-up or fall of a raised machine, always stop engine and remove key before leaving the operator's seat, and always engage safety props before going under the machine for any reason.

1. Start combine, raise header fully, and engage header lift cylinder locks.
2. Stop engine and remove key.
3. Rotate latches (A) to unlock handle (B).

   NOTE:

   Parts have been removed from illustration at right for clarity.

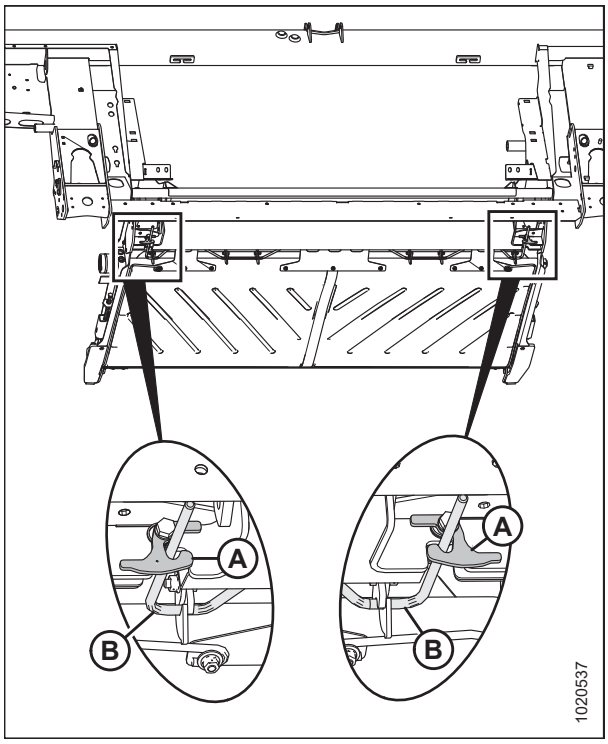

Figure 5.202: Feed Deck Pan – Rear View

4. Hold pan (A) and rotate handles (B) downward to release pan.

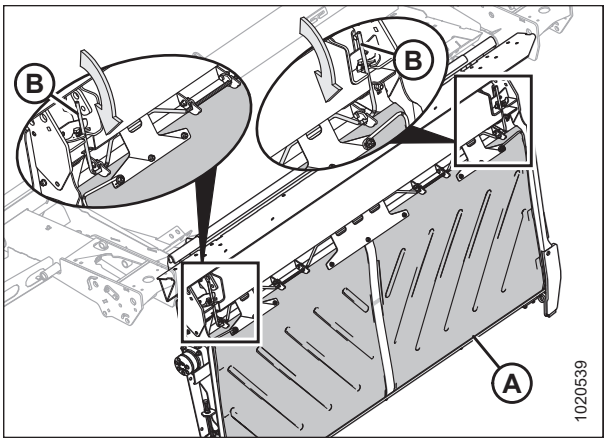

Figure 5.203: Underside of Feed Deck Pan

5. Lower pan (A) and check for shipping materials/debris that may have fallen under float module draper.

   NOTE:

   Illustration at right shows rear view of feed deck.

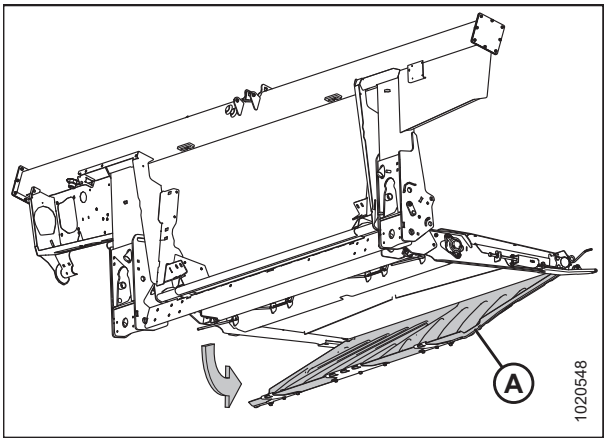

Figure 5.204: Feed Deck Pan

5.10.6 Raising FM100 Feed Deck Pan

1. Raise feed deck pan (A).
2. Engage lock handle (B) in feed deck pan hooks (C).
3. Rotate handles (B) upwards, bringing feed deck pan (A) into locking position.

   NOTE:

   Ensure that all three deck pan hooks (C) are secured on lock handle (B).

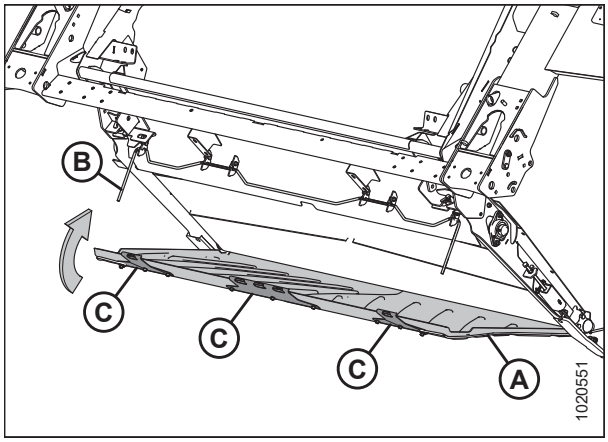

Figure 5.205: Underside of Feed Deck Pan – Rear View

4. Hold feed deck pan (A) in place, and rotate latches (B) to lock handle (C).

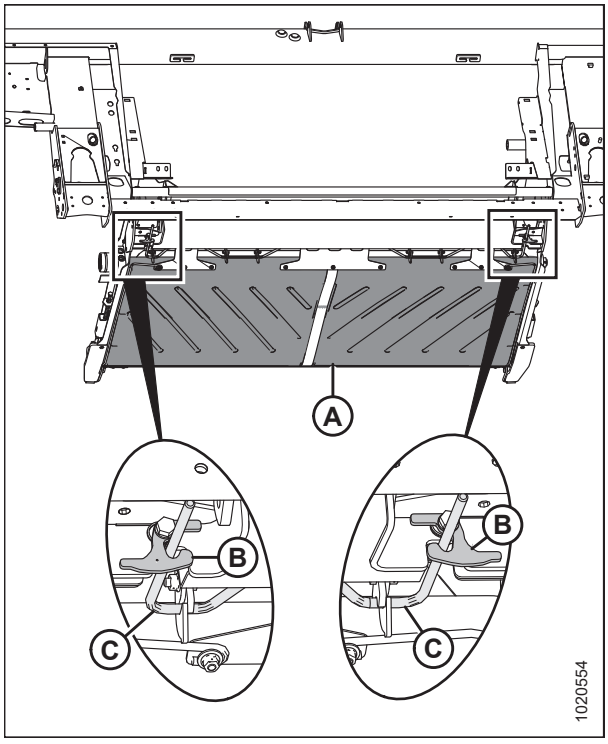

Figure 5.206: Feed Deck Pan – Rear View

5.10.7 Checking Link Holder Hooks

Check the left and right link holder hooks **DAILY** to ensure they are not cracked or broken.

DANGER

To avoid bodily injury or death from unexpected start-up or fall of raised machine, always stop engine, remove key, and engage safety props before going under header for any reason.

1. Stop the engine, and remove the key from the ignition.
2. Before operation, ensure both link holder hooks (A) are engaged on the float module under the feed deck as shown.

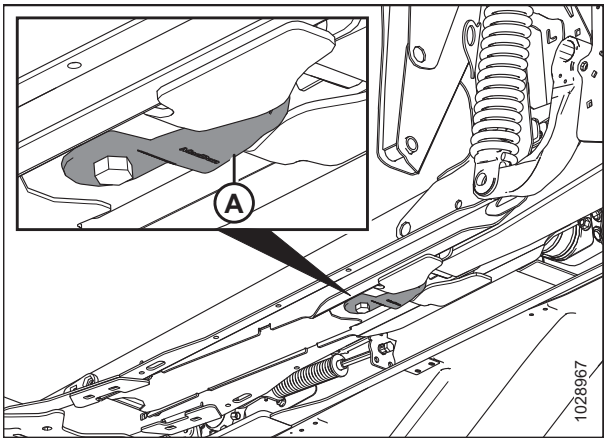

Figure 5.207: Feed Deck – View from Below

- Undamaged link holder hook (A)
- Damaged/broken link holder hook (B)

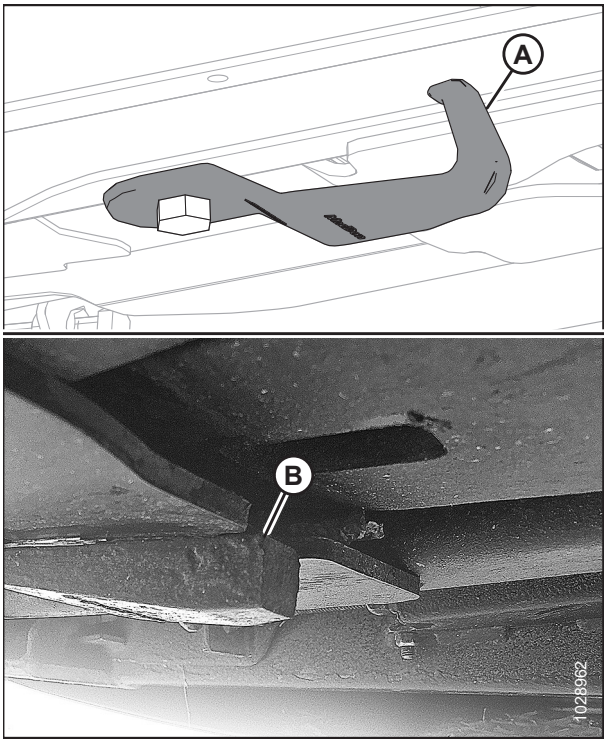

Figure 5.208: Link Holder Hooks

NOTE:

To move hook (A) to storage position, loosen bolt (B) and rotate the hook 90°.

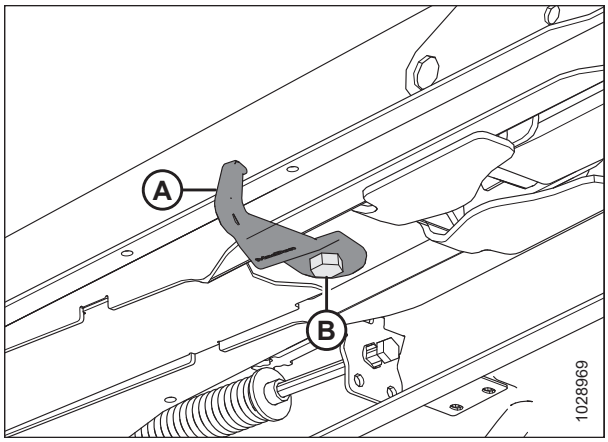

Figure 5.209: Link Holder Hook in Storage Position

5.11 FM100 Stripper Bars and Feed Deflectors

5.11.1 Removing Stripper Bars

1. Detach the header from the combine. For instructions, refer to *4 Header Attachment/Detachment, page 371*.
2. Remove four bolts and nuts (A) securing stripper bar (B) to the float module frame, and remove the stripper bar.
3. Repeat at the opposite side of the header.

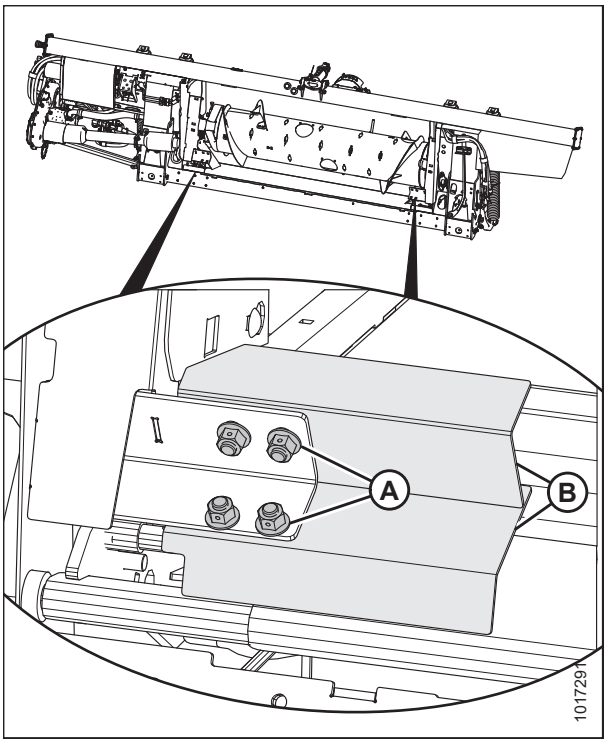

Figure 5.210: Stripper Bar

5.11.2 Installing Stripper Bars

1. Detach the header from the combine. For instructions, refer to *4 Header Attachment/Detachment, page 371*.
2. Position stripper bar (B) as shown so the notch is at the corner of the frame.
3. Secure stripper bar (B) to the float module with four bolts and nuts (A). Ensure the nuts are facing the combine.
4. Repeat at the opposite side of the header.

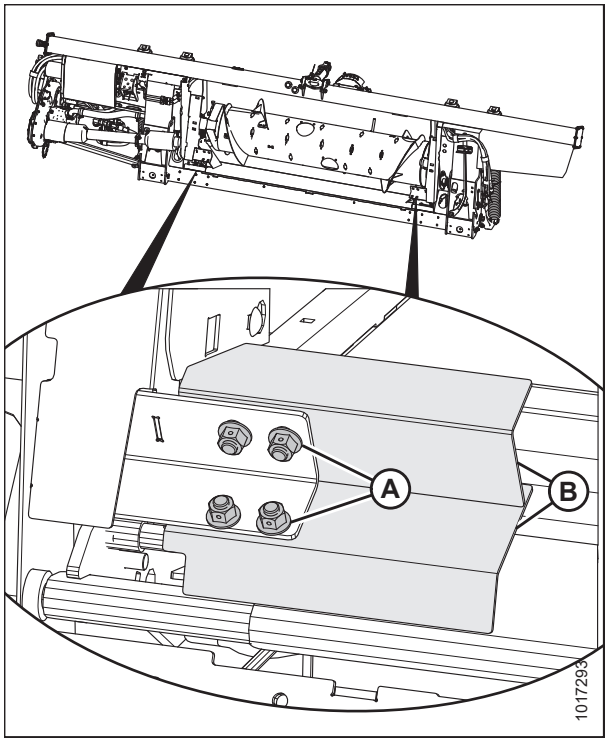

Figure 5.211: Stripper Bar

5.11.3 Replacing Feed Deflectors on New Holland CR Combines

This section is for New Holland CR combines only. If operating a New Holland CX combine, remove feed deflectors.

1. Detach the header from the combine. For instructions, refer to *4 Header Attachment/Detachment, page 371*.
2. Remove two bolts and nuts (B) securing feed deflector (A) to the float module frame, and remove the feed deflector.
3. Position replacement feed deflector (A), and secure with bolts and nuts (B) (ensure the nuts are facing the combine). Do **NOT** tighten nuts.

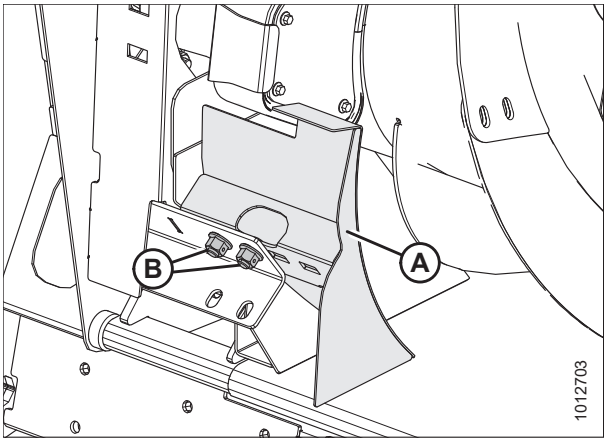

Figure 5.212: Feed Deflector

4. Adjust deflector (A) so that distance (C) between pan and deflector is 4–6 mm (5/32–1/4 in.).
5. Tighten nuts (B).
6. Repeat for opposite deflector.
7. Attach header to the combine. For instructions, refer to *4 Header Attachment/Detachment, page 371*.
8. After attaching the header to the combine, fully extend the center-link and check the gap between the deflector and pan. Maintain the 4–6 mm (5/32–1/4 in.) gap.

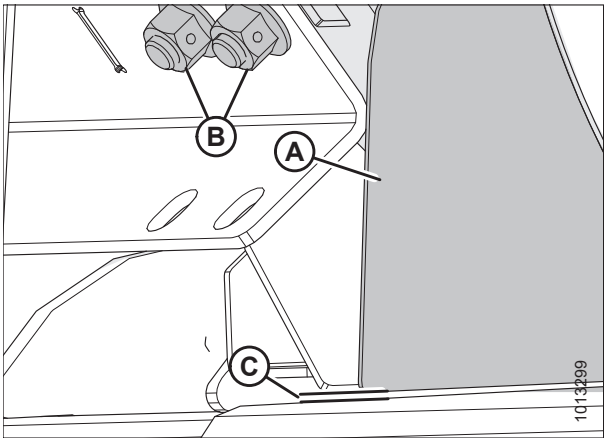

Figure 5.213: Pan and Deflector Distance

5.11.4 Replacing Feed Deflectors on Gleaner Combines

WARNING

To avoid bodily injury or death from the unexpected startup of the machine, always stop the engine and remove the key from the ignition before leaving the operator's seat for any reason.

1. Detach the header from the combine. For instructions, refer to *4 Header Attachment/Detachment, page 371*.
2. Loosen nuts (A) and slide panel (B) up to access the deflector adjustment bolts.

   NOTE:

   The auger was removed from the illustration for clarity.

   NOTE:

   Left deflector assembly shown. Right deflector assembly opposite.

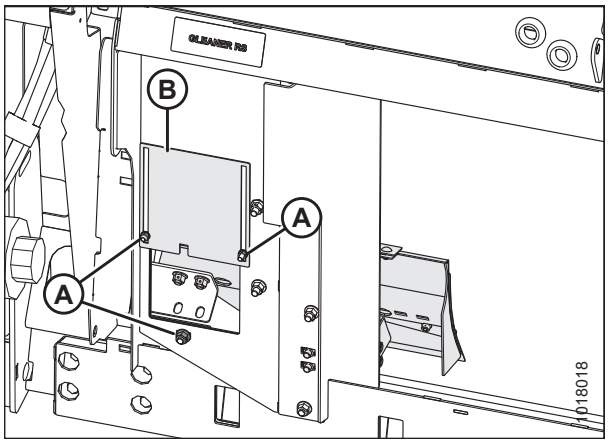

Figure 5.214: Rear View Showing Access Panel

3. Remove two bolts and nuts (B) securing feed deflector (A) to the float module frame, and remove the feed deflector. Retain hardware.

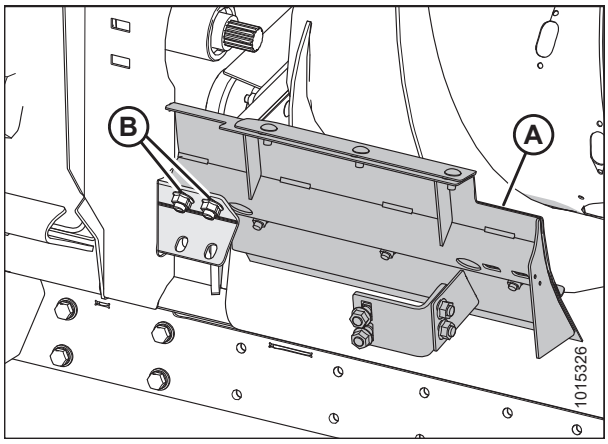

Figure 5.215: Feed Deflector

4. Remove two bolts and nuts (A) securing feed deflector (B) to the float module frame. Retain hardware.
5. Remove two bolts and nuts (C) securing feed deflector (B) to support (D). Retain hardware.

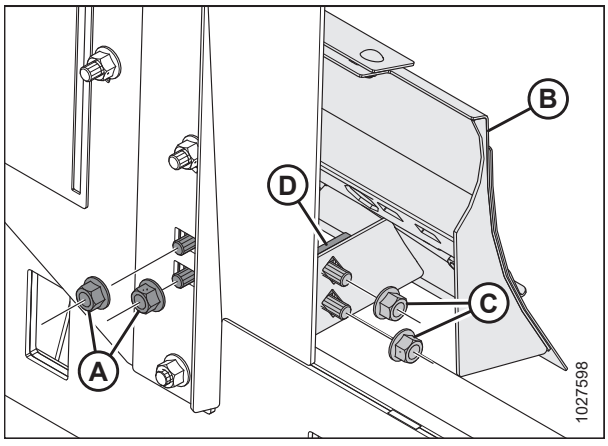

Figure 5.216: Feed Deflector

6. Set new feed deflector (A) in place on the float module frame and secure in place using bolts and nuts (B) retained from Step *3, page 550*. If hardware (B) is damaged, replace with two 25 mm short-necked carriage bolts and two flange lock nuts.
7. Attach the float module and header to the combine. For instructions, refer to *4 Header Attachment/Detachment, page 371*.
8. Fully retract center-link (position A on the indicator).
9. Shut down the engine and remove the key.

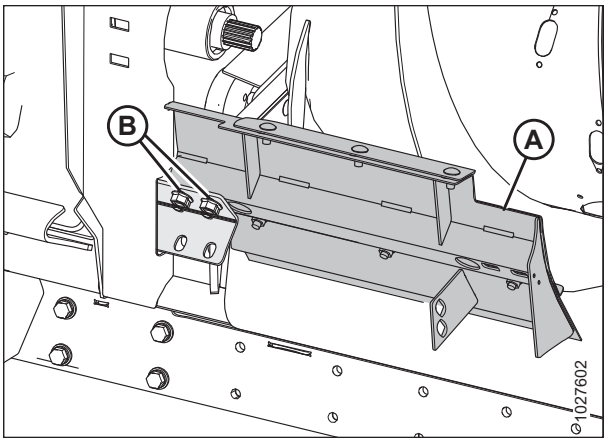

Figure 5.217: Feed Deflector

10. To adjust the deflector, loosen nuts (A) and position the deflector so that distance (B) between the feed pan and the deflector is 20–22 mm (13/16–7/8 in.).

    NOTE:

    The auger was removed from the illustration for clarity.

11. Tighten nuts (A).

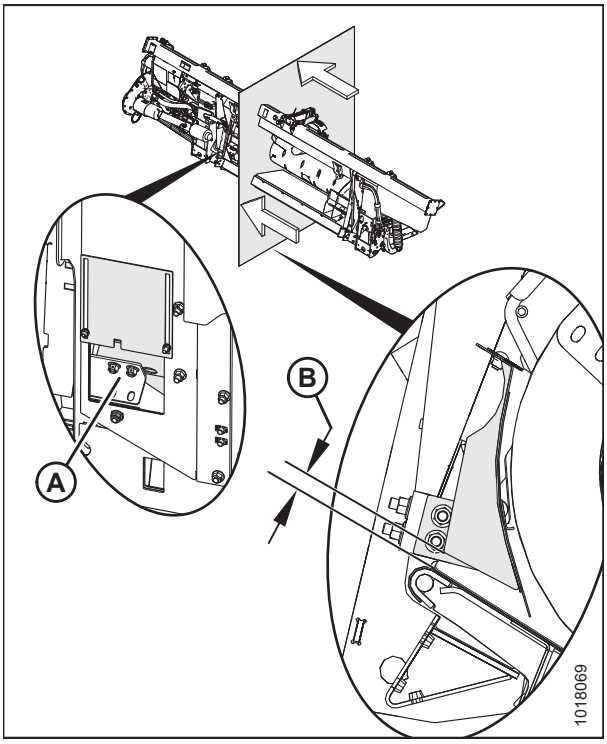

Figure 5.218: Rear View Showing Access Panel

12. If there is a gap larger than 4 mm (3/16 in.) between stainless steel deflector panel (B) (part of the deflector assembly) and the feed pan, loosen hardware (A) and adjust the stainless steel adjusting panel until it contacts the stainless steel feed pan. Tighten hardware.

    NOTE:

    The auger was removed from the illustration for clarity.

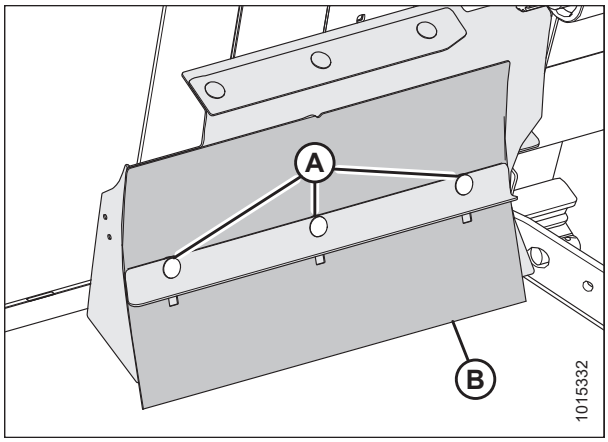

Figure 5.219: Front View of Stainless Steel Adjusting Panel

13. If necessary, loosen hardware (A), and then adjust the position of stripper (B) on top of the deflector. The stripper edge should extend over the front of the deflector top bend so that dimension (C) is 7.6 mm (5/16 in.).

    NOTE:

    The auger was removed from the illustration for clarity.

14. Retighten hardware (A).

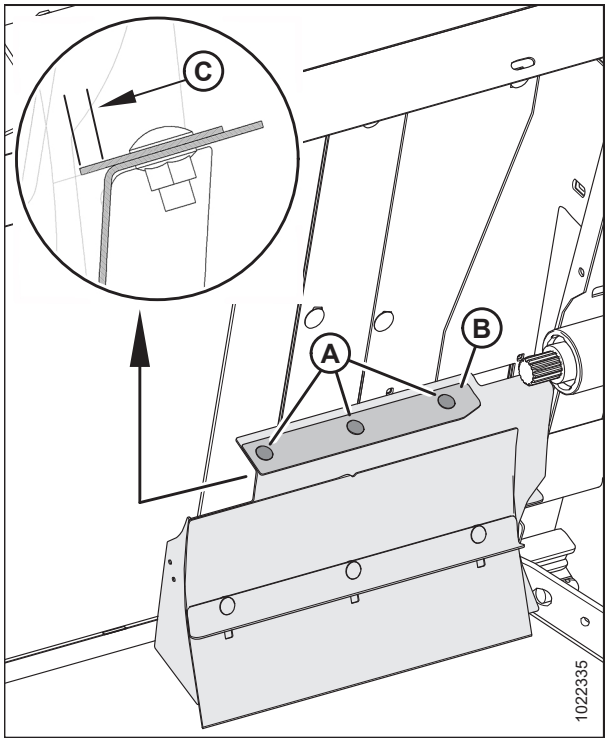

Figure 5.220: Stripper Position

15. Close access panel (B) and tighten nuts (A).

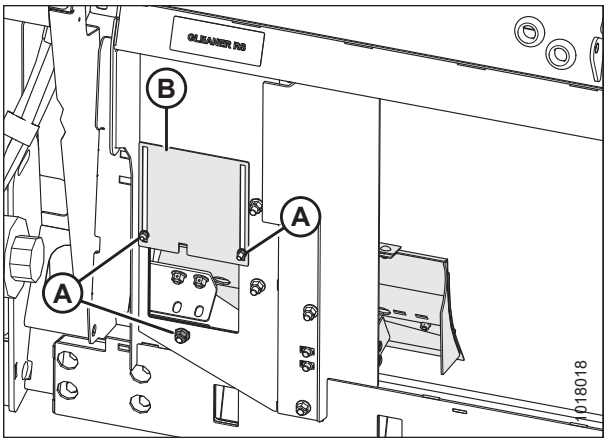

Figure 5.221: Rear View Showing Access Panel

16. Using bolts and nuts (A) retained from Step *5, page 550*, secure support (B) to replacement feed deflector (C).
17. Position replacement feed deflector (C), and secure with bolts and nuts (D) retained from Step *4, page 550*. Ensure the nuts are facing the combine. Do **NOT** tighten nuts.
18. Repeat for opposite side deflector.
19. Extend center-link fully, and check gap between deflector and pan. Maintain the 20–22 mm (13/16–7/8 in.) gap.

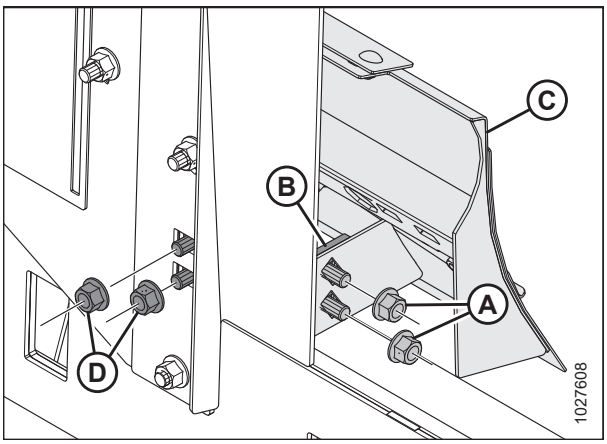

Figure 5.222: Replacement Feed Deflector

5.12 Header Side Drapers

There are two header side drapers. They convey cut crop to the float module feed draper and auger. Replace the drapers if torn, cracked, or missing slats.

5.12.1 Removing Side Drapers

DANGER

To avoid bodily injury or death from unexpected start-up or fall of a raised machine, always stop engine and remove key before leaving the operator's seat, and always engage safety props before going under the machine for any reason.

1. Start the engine. For instructions, refer to the combine operator's manual.
2. Raise the reel fully.
3. Raise the header fully.
4. Shut down the engine, and remove the key from the ignition.
5. Engage the header safety props.
6. Engage the reel safety props. For instructions, refer to *Engaging Reel Safety Props, page 35*.
7. Move the draper until the draper joint is in the work area.

   NOTE:

   The decks on the header can also be shifted towards the center to provide an opening at the endsheets.
8. Shut down the engine, and remove the key from the ignition.
9. Release the tension on the draper. For instructions, refer to *5.12.3 Adjusting Draper Tension, page 557*.
10. Remove screws (A) and tube connectors (B) at the draper joint.
11. Pull the draper from the deck.

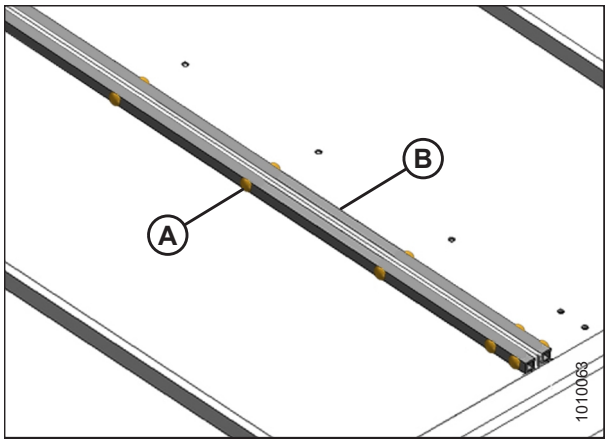

Figure 5.223: Draper Connector

5.12.2 Installing Side Drapers

DANGER

To avoid bodily injury or death from unexpected start-up or fall of a raised machine, always stop engine and remove key before leaving the operator's seat, and always engage safety props before going under the machine for any reason.

WARNING

To avoid bodily injury from fall of raised reel, always engage reel safety props before going under raised reel for any reason.

1. Start the engine. For instructions, refer to the combine operator's manual.
2. Raise the reel fully.
3. Raise the header fully.
4. Shut down the engine, and remove the key from the ignition.
5. Engage the header safety props.
6. Engage the reel safety props. For instructions, refer to *Engaging Reel Safety Props, page 35*.
7. Check the deck height before installing the drapers. For instructions, refer to *5.12.5 Adjusting Deck Height, page 560*.
8. Apply talc, baby powder, or talc/graphite lubricant mix to the underside of the draper guides and to the draper surface that forms the seal with the cutterbar.
9. Insert the draper into the deck at the outboard end under the rollers. Pull the draper into the deck while feeding it at the end.
10. Feed in the draper until it can be wrapped around the drive roller.
11. Insert the opposite end of the draper into the deck over the rollers. Pull the draper fully into the deck.



Figure 5.224: Installing Draper

12. Loosen mounting bolts (B) on rear deck deflector (A) (this may help with draper installation).

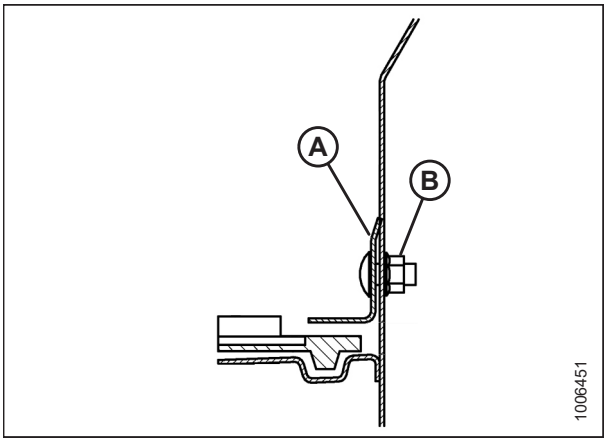

Figure 5.225: Draper Seal

13. Attach the ends of the draper with tube connectors (B), screws (A) (with the heads facing the center opening), and nuts.
14. Adjust the draper tension. For instructions, refer to *5.12.3 Adjusting Draper Tension, page 557*.

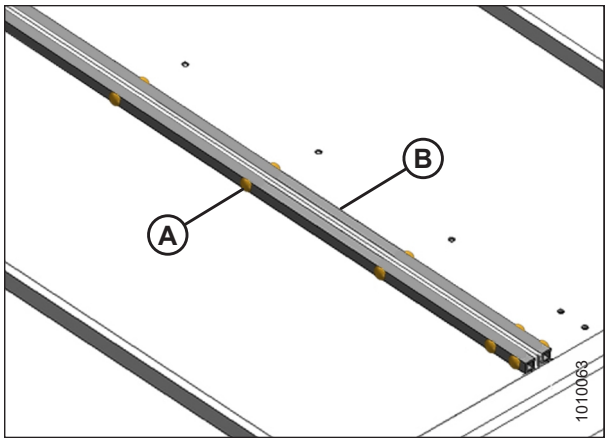

Figure 5.226: Draper Connector

15. Check clearance (A) between drapers (B) and cutterbar (C). Clearance should be 1–3 mm (1/16–1/8 in.). If adjustment is necessary, refer to *5.12.5 Adjusting Deck Height, page 560*.

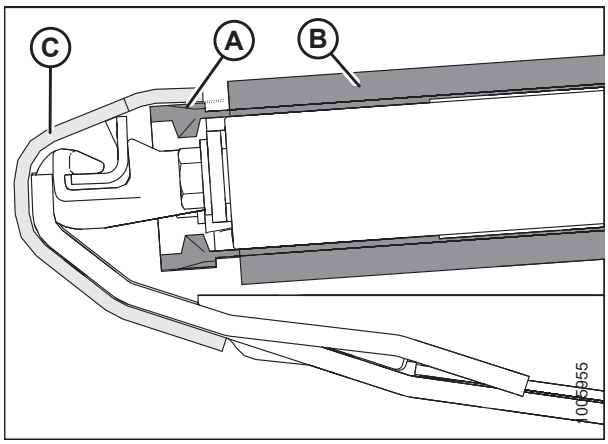

Figure 5.227: Draper Seal

16. If backsheet deflector (A) requires adjustment, loosen nut (D) and move the deflector until there is a 1–7 mm (1/32–5/16 in.) gap (C) between draper (B) and the deflector.
17. Operate the drapers with the engine at idle so the talc or talc/graphite lubricant makes contact and adheres to the draper seal surfaces.

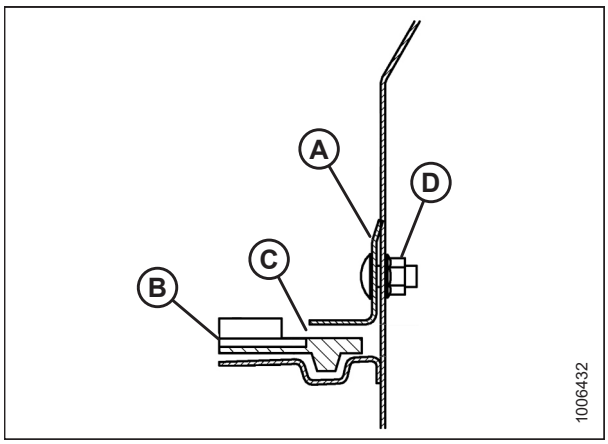

Figure 5.228: Draper Seal

5.12.3 Adjusting Draper Tension

The drapers are tensioned at the factory and rarely need adjustment. If adjustment is required, tension the drapers just enough to prevent slipping and to keep the draper from sagging below the cutterbar. Adjust drapers on both sides of the header.

DANGER

To avoid bodily injury or death from unexpected start-up or fall of raised machine, always stop engine, remove key, and engage safety props before going under machine for any reason.

1. Ensure white indicator bar (A) is at the halfway point in the window.

WARNING

Check to be sure all bystanders have cleared the area.

2. Start the engine and fully raise the header.
3. Shut down the engine, and remove the key from the ignition.
4. Engage the header safety props.

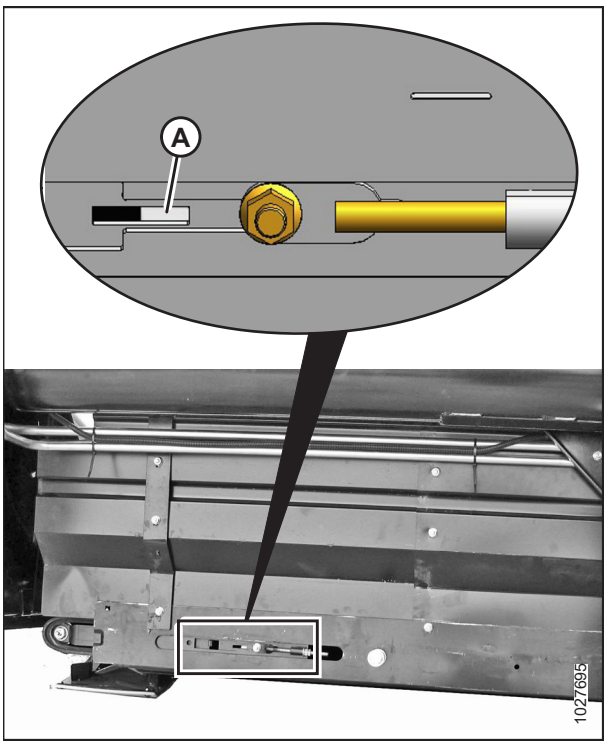

Figure 5.229: Left Tension Adjuster Shown – Right Opposite

5. Ensure the draper guide (the rubber track on the underside of the draper) is properly engaged in groove (A) on the drive roller.

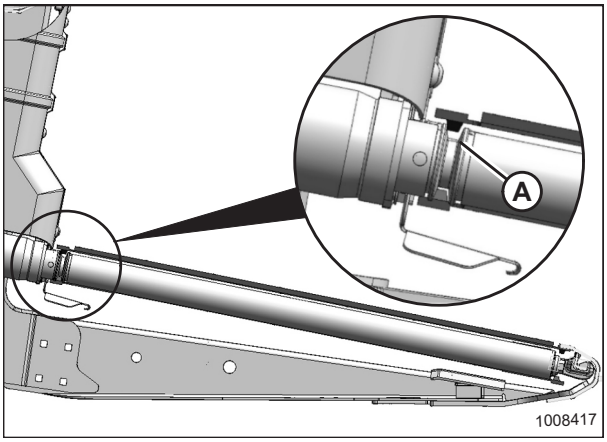

Figure 5.230: Drive Roller

6. Ensure idler roller (A) is between draper guides (B).

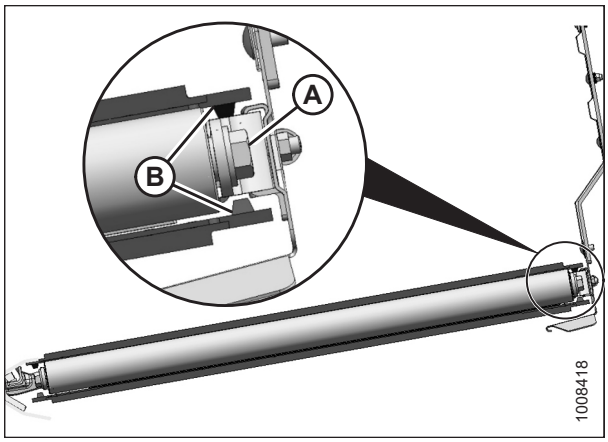

Figure 5.231: Idler Roller

IMPORTANT:

Do **NOT** adjust nut (C). This nut is used for draper alignment only.

7. To loosen draper tension:
   - Turn adjuster bolt (A) counterclockwise. White indicator bar (B) will move outboard in the direction of arrow (D) to indicate that the draper is loosening. Loosen until the white indicator bar is at the halfway point in the window.
8. To tighten draper tension:
   - Turn adjuster bolt (A) clockwise. White indicator bar (B) will move inboard in direction of arrow (E) to indicate that the draper is tightening. Tighten until the white indicator bar is at the halfway point in the window.

IMPORTANT:

To avoid premature failure of the draper, draper rollers, and/or tightener components, do **NOT** operate if the white bar is not visible.

IMPORTANT:

To prevent scooping dirt, ensure the draper is tight enough that it does not sag below the point where the cutterbar contacts the ground.

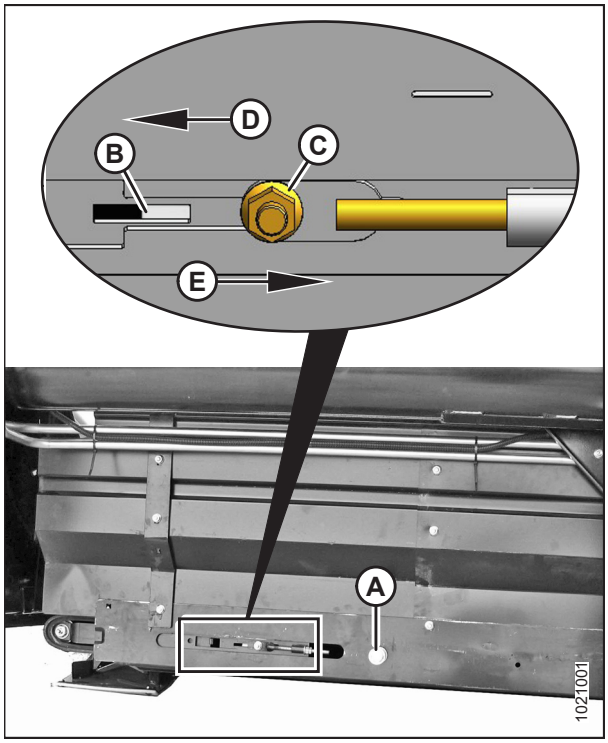

Figure 5.232: Left Tension Adjuster Shown – Right Opposite

5.12.4 Adjusting Side Draper Tracking

The side draper tracking is adjusted by aligning the drive and idler draper rollers.

NOTE:

The left draper deck is shown in the illustrations in this procedure. The right deck is opposite.

Figure 5.233: Draper Tracking Overview

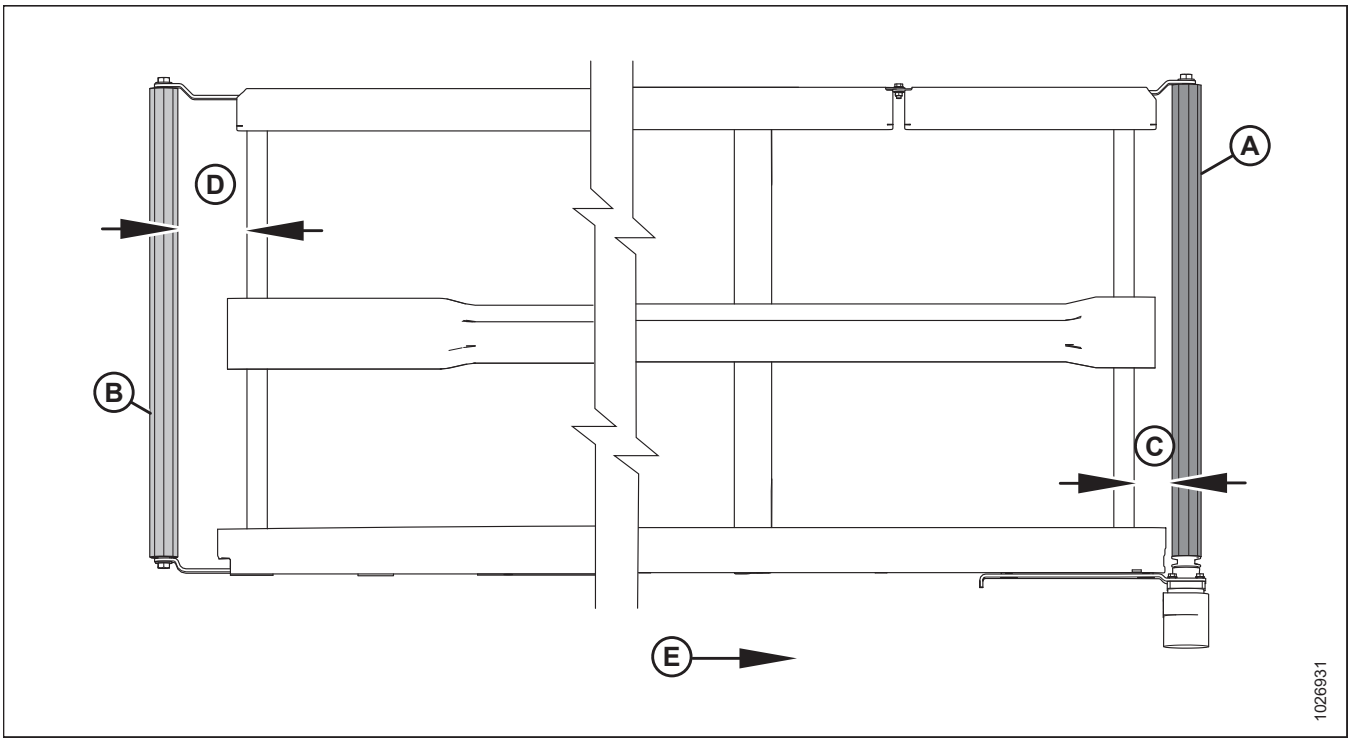

A - Drive Roller
B - Idler Roller
C - Drive Roller Adjust
D - Idler Roller Adjust
E - Draper Direction

1. To determine which roller requires adjustment and which adjustments are necessary, refer to the following table:

Table 5.2 Draper Tracking

Tracking	Adjustment Location	Method
Backward	Increase drive roller (C)	Tighten adjuster nut (C)
Forward	Decrease drive roller (C)	Loosen adjuster nut (C)
Backward	Increase idler roller (D)	Tighten adjuster nut (C)
Forward	Decrease idler roller (D)	Loosen adjuster nut (C)

2. Refer to Table *5.2, page 559* and adjust drive roller (either by increasing or decreasing its alignment) as follows:

   a. Loosen nuts (A) and jam nut (B).

   b. Turn adjuster nut (C).

   NOTE:

   Some parts were removed from the illustration for clarity.

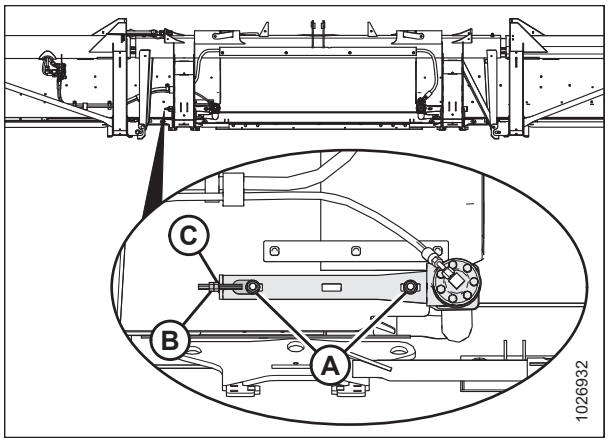

Figure 5.234: Left Deck Drive Roller – Right Side Opposite

3. Refer to Table *5.2, page 559* and adjust nut (C) to adjust the idler roller (either by increasing or decreasing its alignment) as follows:

   a. Loosen nut (A) and jam nut (B).

   b. Turn adjuster nut (C).

   NOTE:

   If the draper does not track at the idler roller end after the idler roller adjustment, the drive roller is likely not square to the deck. Adjust the drive roller, and then readjust the idler roller.

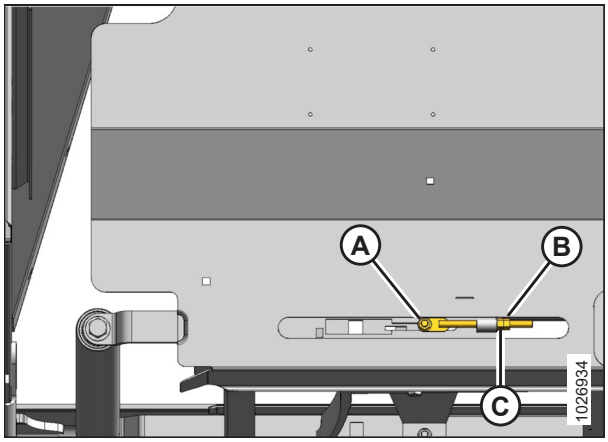

Figure 5.235: Left Deck Idler Roller – Right Side Opposite

5.12.5 Adjusting Deck Height

DANGER

To avoid bodily injury or death from unexpected start-up or fall of raised machine, always stop engine, remove key, and engage safety props before going under header for any reason.

IMPORTANT:

New factory-installed drapers are pressure and heat checked at the factory. The gap between draper and cutterbar is set to 1–3 mm (0.04–0.12 in.). This is to prevent material from entering into the side drapers and stalling them.

1. Shut down the engine, and remove the key from the ignition.

2. With the header in working position, check that clearance (A) between draper (B) and cutterbar (C) is 1–3 mm (0.04–0.12 in.).

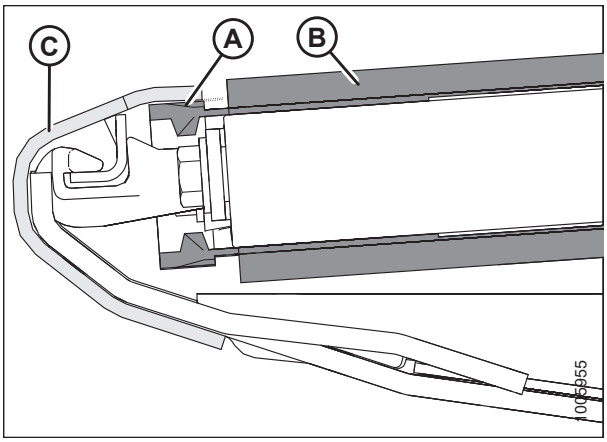

Figure 5.236: Draper Seal

3. Take measurement at deck supports (A) with the header in working position. Depending on the header size, there are between two and eight supports per deck.
4. Loosen the draper tension. For instructions, refer to *5.12.3 Adjusting Draper Tension, page 557*.

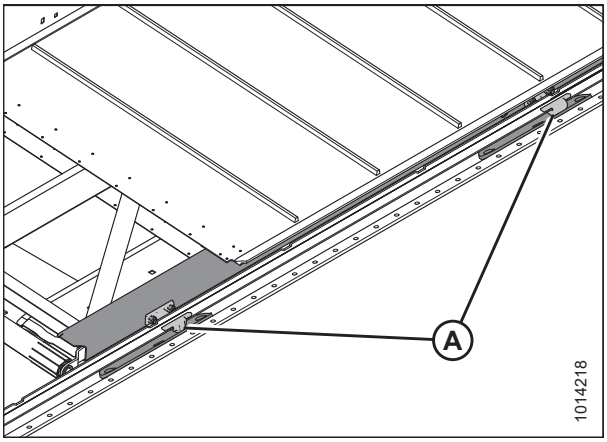

Figure 5.237: Draper Deck Supports

5. Lift front edge of draper (A) past cutterbar (B) to expose the deck support.
6. Measure and note the thickness of the draper belt.

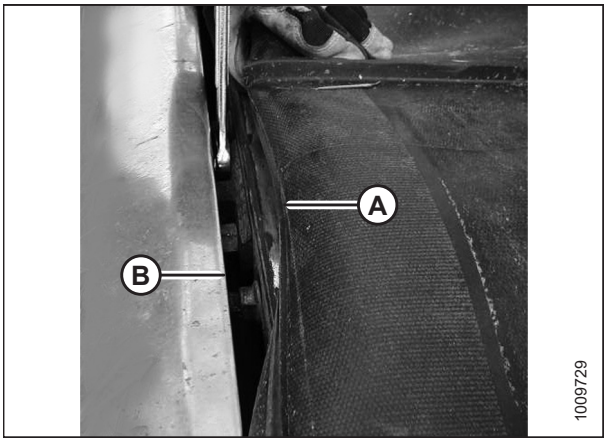

Figure 5.238: Deck Adjustment

7. Loosen two lock nuts (A) on deck support (B) one half-turn **ONLY**.

   NOTE:

   The deck is shown with the draper removed. The number of deck supports (B) is determined by the header width as follows:

   - 6.1 m (20 ft.): Four supports
   - 7.6– 9.1 m (25–30 ft.): Six supports
   - 10.7–12.2 m (35–40 ft.): Eight supports
   - 13.7 m (45 ft.): Ten supports

8. Tap deck (C) with a hammer to lower the deck relative to the deck supports. Tap deck support (B) using a punch to raise the deck relative to the deck supports.
9. Locate a gauge that is the same thickness as the draper belt, plus 1 mm (0.04 in.). Slide the thickness gauge along deck (A) under the cutterbar in order to properly set the gap.
10. To create a seal, adjust deck (A) so that clearance (B) between cutterbar (C) and deck is the same thickness as the draper belt plus 1 mm (0.04 in.).

    NOTE:

    When checking clearance at either roller, measure from the roller tube, **NOT** the deck.

11. Tighten deck support hardware (D).
12. Recheck gap (B) with thickness gauge. For instructions, refer to Step *9, page 562*.
13. Tension the draper. For instructions, refer to *5.12.3 Adjusting Draper Tension, page 557*.
14. If required, adjust backsheet deflector (A) by loosening nut (D) and moving the deflector until there is a 1–7 mm (0.04–0.28 in.) gap (C) between draper (B) and the deflector.

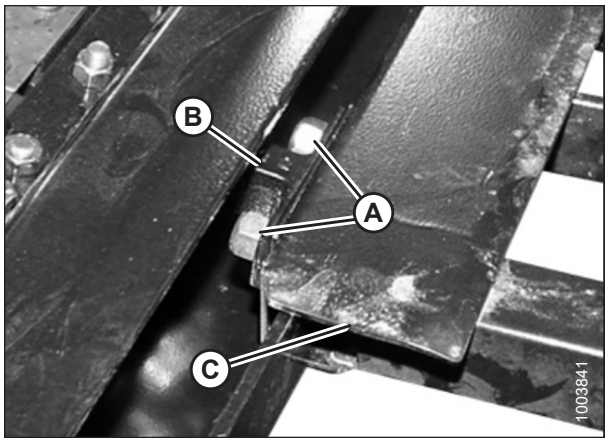

Figure 5.239: Deck Support

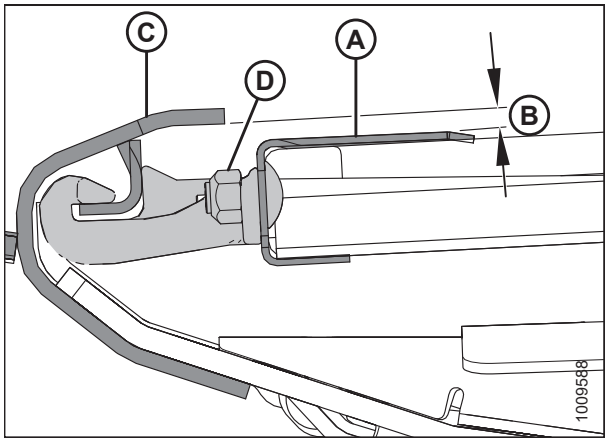

Figure 5.240: Deck Support

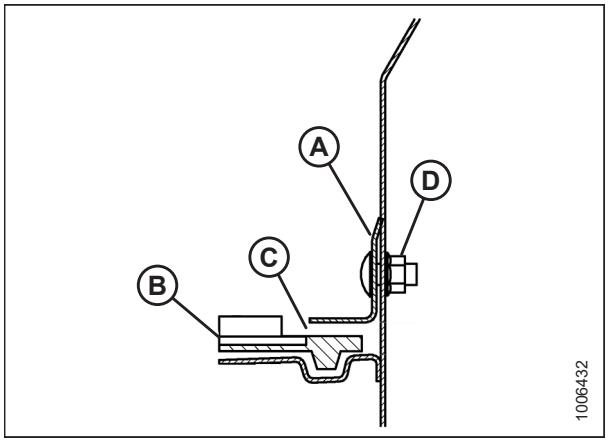

Figure 5.241: Backsheet Deflector

5.12.6 Draper Roller Maintenance

The draper rollers have non-greaseable bearings; however, the external seal should be checked every 200 hours (more frequently in sandy conditions) to achieve maximum bearing life.

Inspecting Draper Roller Bearing

Using an infrared thermometer, check for bad draper roller bearings as follows:

1. Engage the header and run the drapers for approximately 3 minutes.
2. Check the temperature of the draper roller bearings at each of roller arms (A), (B), and (C) on each deck. Ensure the temperature does not exceed 44°C (80°F) above the ambient temperature.

   Replace roller bearings that exceed maximum recommended temperature. For instructions, refer to

   - *Replacing Feed Draper Idler Roller Bearing, page 538*
   - *Replacing Side Draper Drive Roller Bearing, page 568*

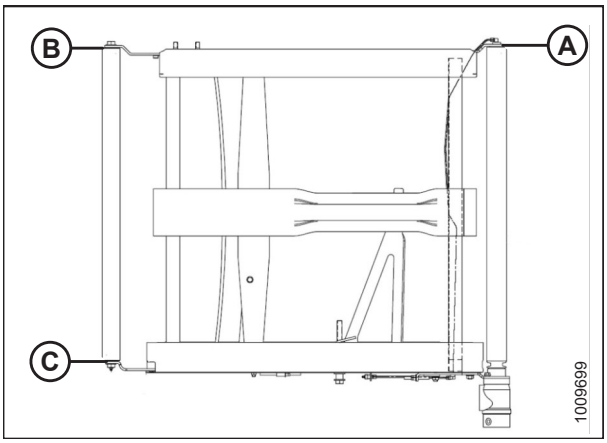

Figure 5.242: Roller Arms

Draper Deck Idler Roller

Removing Side Draper Deck Idler Roller

DANGER

To avoid bodily injury or death from unexpected start-up or fall of a raised machine, always stop engine and remove key before leaving the operator's seat, and always engage safety props before going under the machine for any reason.

WARNING

Never start or move the machine until you are sure all bystanders have cleared the area.

1. If the draper connector is not visible, engage the header until the connector is accessible (preferably close to the outboard end of the deck).
2. Start the engine.
3. Raise the header fully.
4. Shut down the engine, and remove the key from the ignition.
5. Engage the reel safety props. For instructions, refer to *Engaging Reel Safety Props, page 35*.
6. Engage the header safety props.

7. Loosen the draper by turning adjuster bolt (A) counterclockwise.

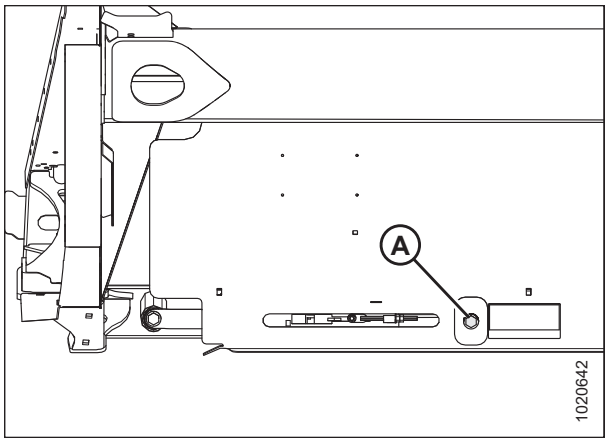

Figure 5.243: Tensioner

8. Remove screws (A), tube connectors (B), and nuts from the draper joint to uncouple the draper.
9. Pull the draper off the idler roller.

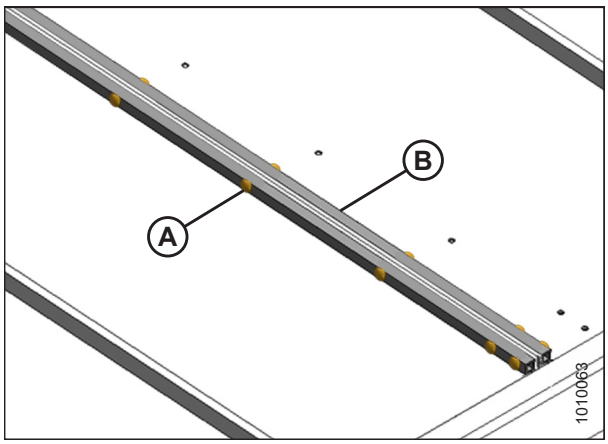

Figure 5.244: Draper Connector

10. Remove bolt (A) and washer from the idler roller at the back of the header deck.
11. Remove bolt (B) and washer from the idler roller at the front of the header deck.
12. Spread roller arms (C) and (D), and remove the idler roller.

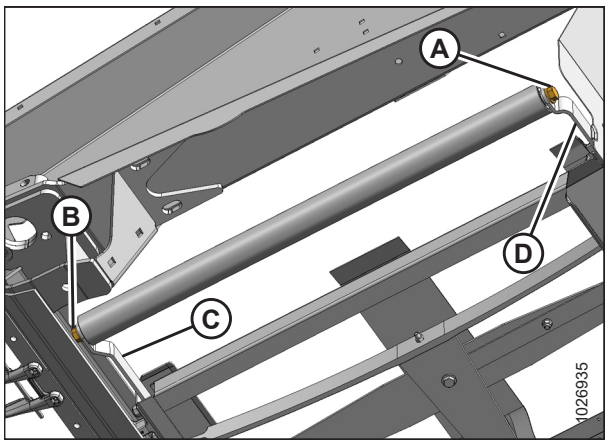

Figure 5.245: Idler Roller

Replacing Header Draper Idler Roller Bearing

1. Remove the draper idler roller assembly. For instructions, refer to *Removing Side Draper Deck Idler Roller, page 563*.
2. Remove bearing assembly (A) and seal (B) from roller tube (C) as follows:
   a. Attach slide hammer (D) to threaded shaft (E) in the bearing assembly.
   b. Tap out bearing assembly (A) and seal (B).
3. Clean the inside of roller tube (C), check the tube for signs of wear or damage, and replace if necessary.

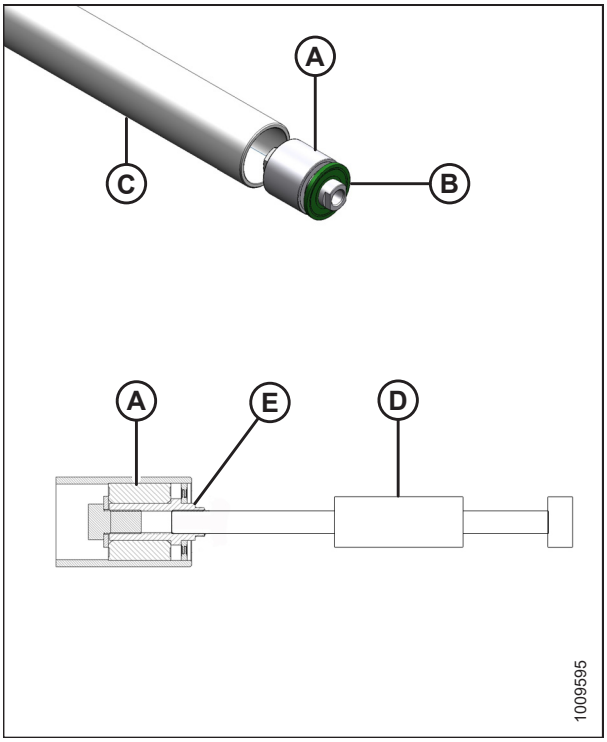

Figure 5.246: Roller Bearing

4. Install new bearing assembly (A) by pressing the outer race of the bearing into the tube until it is 14–15 mm (9/16–19/32 in.) (B) from the outside edge of the tube.
5. Apply grease in front of bearing assembly (A). Refer to the inside back cover of this book for grease specifications.
6. Install new seal (C) at the roller opening, and install a flat washer (1.0 in. I.D. x 2.0 in. O.D.) on the seal.
7. Tap seal (C) into the roller opening with a suitably sized socket. Tap the washer and bearing assembly (A) until the seal is 3–4 mm (1/8–3/16 in.) (D) from the outside edge of the tube.

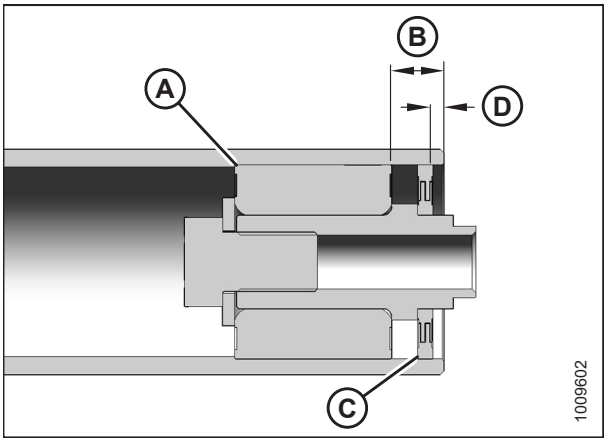

Figure 5.247: Roller Bearing

Installing Header Draper Idler Roller

1. Position the stub shaft into the idler roller in forward arm (B) on the deck.
2. Push on the roller to slightly deflect the forward arm so the stub shaft at the rear of the roller can be slipped into rear arm (C).
3. Install bolts (A) with washers, and torque to 93 Nm (70 lbf·ft).
4. Wrap the draper over the idler roller, close the draper, and set the tension. For instructions, refer to *5.12.2 Installing Side Drapers, page 555*.
5. Run the machine and verify the draper tracks correctly. Adjust the draper tracking if required. For instructions, refer to *5.12.4 Adjusting Side Draper Tracking, page 559*.

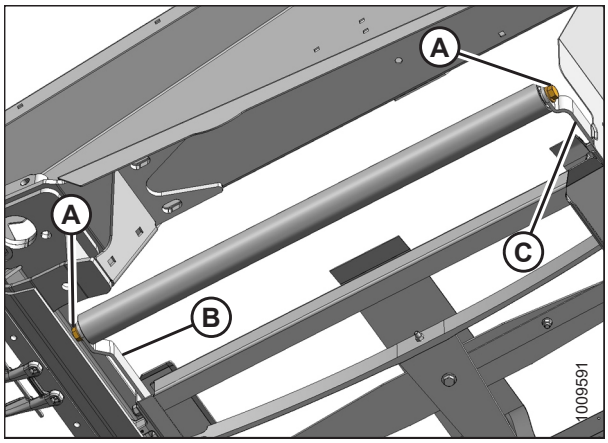

Figure 5.248: Idler Roller

Draper Deck Drive Roller

Removing Side Draper Drive Roller

DANGER

To avoid bodily injury or death from unexpected start-up or fall of a raised machine, always stop engine and remove key before leaving the operator's seat, and always engage safety props before going under the machine for any reason.

WARNING

Never start or move the machine until you are sure all bystanders have cleared the area.

1. If the draper connector is not visible, engage the header until the connector is accessible (preferably close to the outboard end of the deck).
2. Raise the reel fully.
3. Start the engine.
4. Raise the header fully.
5. Shut down the engine, and remove the key from the ignition.
6. Engage the reel safety props. For instructions, refer to *Engaging Reel Safety Props, page 35*.
7. Engage the header safety props.

8. Loosen the draper by turning adjuster bolt (A) counterclockwise.

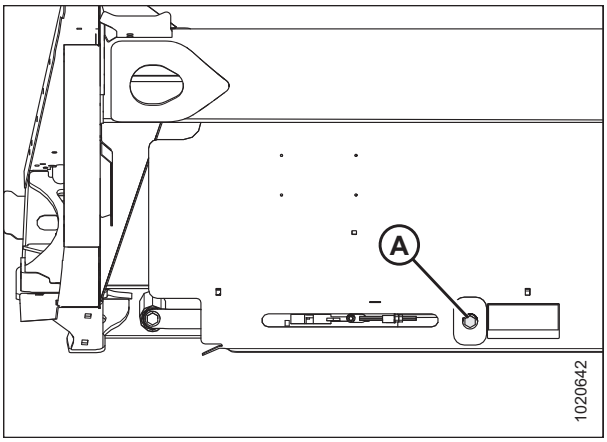

Figure 5.249: Draper Tensioner

9. Remove tube connectors (B), screws (A), and nuts from the draper joint.
10. Pull the draper off the drive roller.

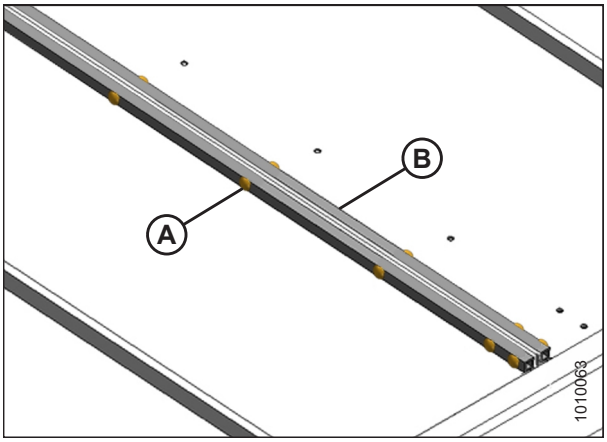

Figure 5.250: Draper Connector

11. Align the set screws with hole (A) in the guard. Remove the two set screws holding the motor onto the drive roller.

    NOTE:

    The set screws are 1/4 turn apart.

12. Remove four bolts (B) securing the motor to the drive roller arm.

    NOTE:

    It may be necessary to remove plastic shield (C) to gain access to the top bolt.

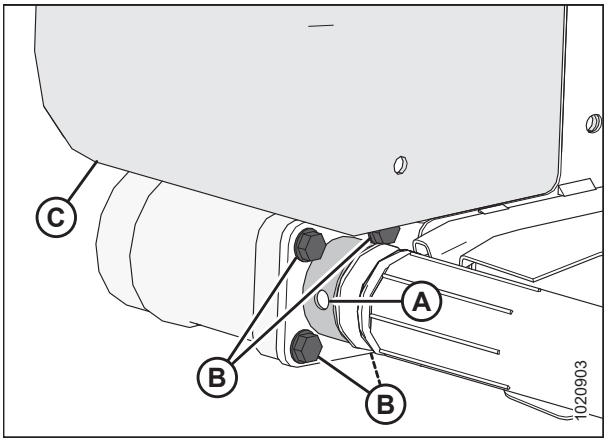

Figure 5.251: Drive Roller

13. Remove bolt (A) securing the opposite end of drive roller (B) to the support arm.
14. Remove drive roller (B).

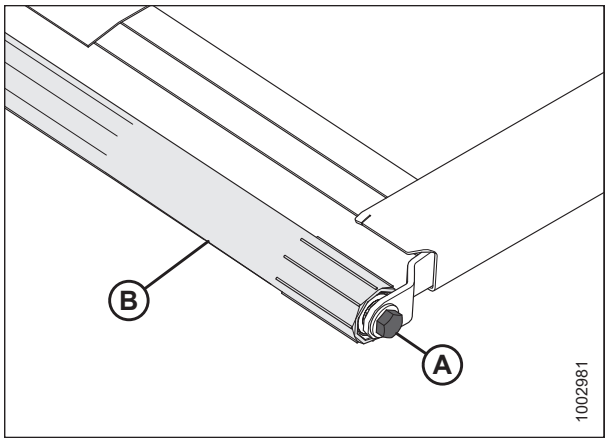

Figure 5.252: Drive Roller

Replacing Side Draper Drive Roller Bearing

1. Remove the draper idler roller assembly. For instructions, refer to *Removing Side Draper Drive Roller, page 566*.
2. Remove bearing assembly (A) and seal (B) from roller tube (C) as follows:
   a. Attach slide hammer (D) to threaded shaft (E) in the bearing assembly.
   b. Tap out bearing assembly (A) and seal (B).
3. Clean the inside of roller tube (C), check the tube for signs of wear or damage, and replace if necessary.

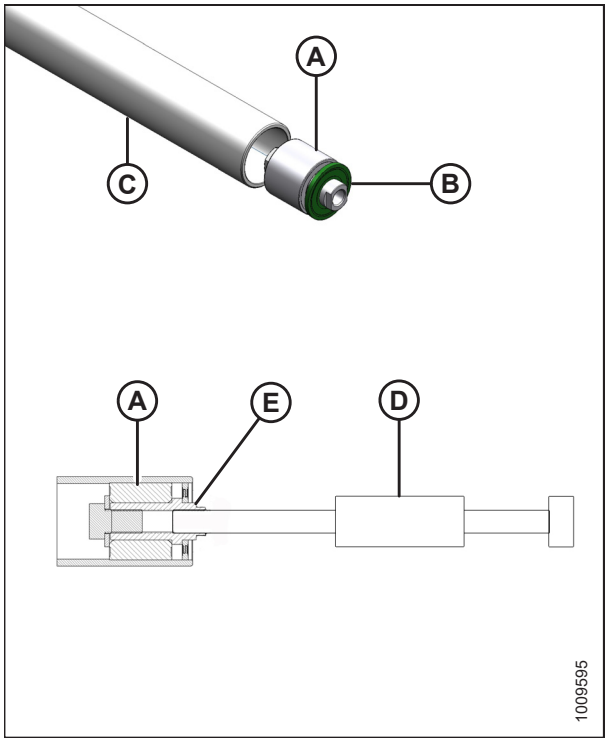

Figure 5.253: Roller Bearing

4. Install new bearing assembly (A) by pressing the outer race of the bearing into the tube until it is 14–15 mm (9/16–19/32 in.) (B) from the outside edge of the tube.
5. Apply grease in front of bearing assembly (A). Refer to the inside back cover of this book for grease specifications.
6. Install new seal (C) at the roller opening, and install a flat washer (1.0 in. I.D. x 2.0 in. O.D.) on the seal.
7. Tap seal (C) into the roller opening with a suitably sized socket. Tap the washer and bearing assembly (A) until the seal is 3–4 mm (1/8–3/16 in.) (D) from the outside edge of the tube.

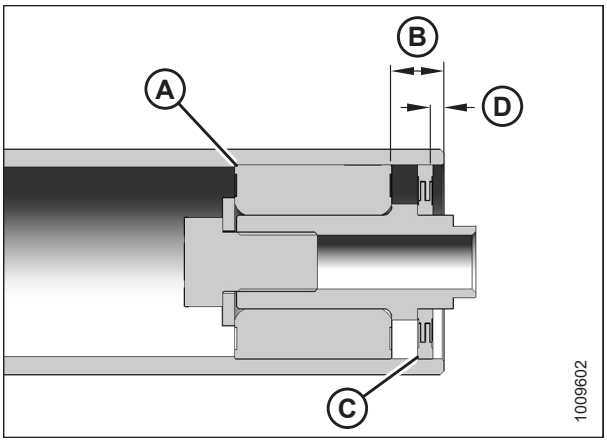

Figure 5.254: Roller Bearing

Installing Side Draper Drive Roller

1. Position drive roller (B) between the roller support arms.
2. Install bolt (A) to secure the drive roller to the arm closest to the cutterbar. Torque bolt to 95 Nm (70 lbf·ft).
3. Grease the motor shaft and insert into the end of drive roller (B).

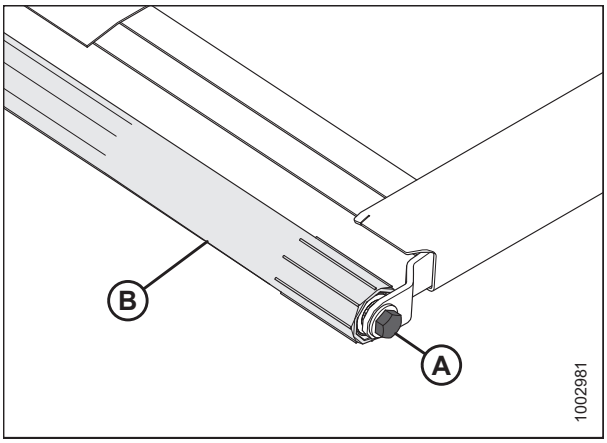

Figure 5.255: Drive Roller

4. Secure the motor to the roller support with four bolts (B). Torque to 27 Nm (20 lbf·ft).

   NOTE:

   Tighten any loosened bolts and reinstall plastic shield (C) if previously removed.
5. Ensure the motor is all the way into the roller, and tighten the two set screws (not shown) through access hole (A).

   NOTE:

   The set screws are 1/4 turn apart.

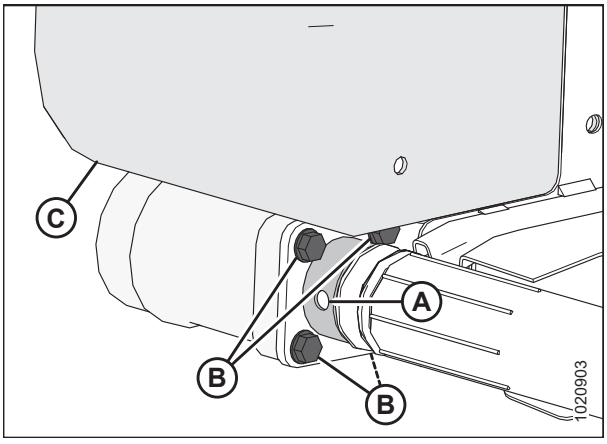

Figure 5.256: Drive Roller

6. Wrap the draper over the drive roller and attach the ends of the draper using tube connectors (B), screws (A), and nuts.

   NOTE:

   The heads of the screws must face the center opening.

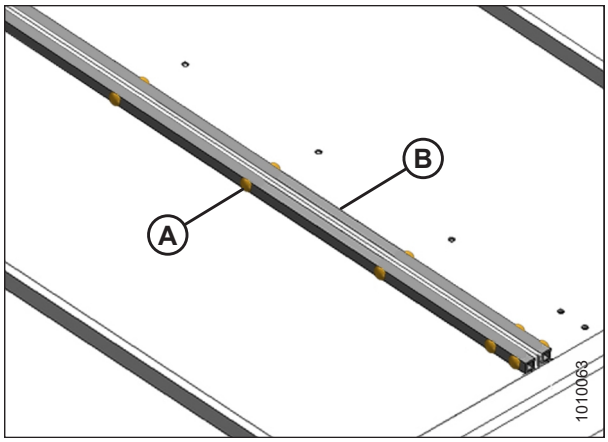

Figure 5.257: Draper Connector

7. Tension the draper. Locate adjuster bolt (A) and follow the directions on decal (B), or refer to *5.12.3 Adjusting Draper Tension, page 557* for proper draper tensioning.
8. Disengage the reel and header safety props.

WARNING

Never start or move the machine until you are sure all bystanders have cleared the area.

9. Start the engine and lower the header and reel.
10. Run the machine to verify the draper tracks correctly. If additional adjustment is necessary, refer to *5.12.4 Adjusting Side Draper Tracking, page 559*.

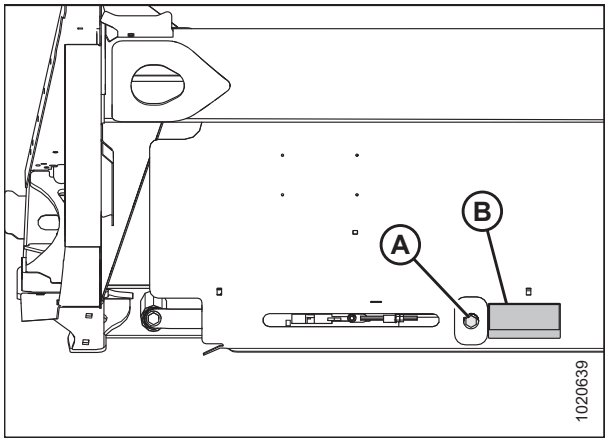

Figure 5.258: Draper Tensioner — Left Side Shown

5.12.7 Draper Deflectors

Narrow draper deflectors can reduce bunching at the ends of the header when decks are set for center delivery.

Removing Narrow Draper Deflectors

DANGER

To avoid bodily injury or death from unexpected start-up or fall of a raised machine, always stop engine and remove key before leaving the operator's seat, and always engage safety props before going under the machine for any reason.

WARNING

Never start or move the machine until you are sure all bystanders have cleared the area.

1. Raise the reel to its full height and lower the header to the ground.
2. Move the decks manually after shutting down the combine.
3. Stop the engine, remove the key, and engage the reel safety props.
4. Open the endshield.
5. Remove two Torx® head screws (A) and lock nuts.
6. Remove three carriage bolts (B) and lock nuts, and remove aft deflector (C).

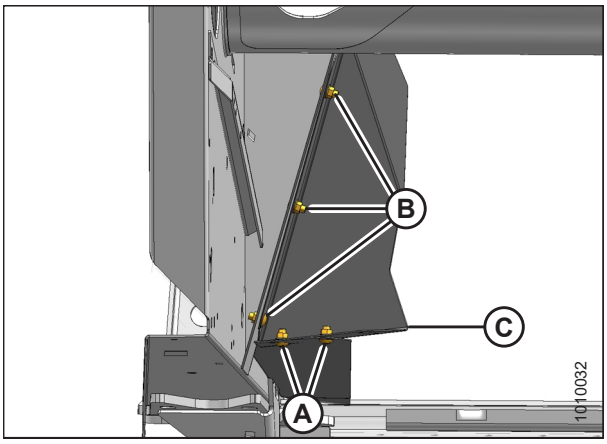

Figure 5.259: Aft Deflector

7. Remove four screws (A) and remove deflector (B).
8. Repeat for the opposite end of the header.

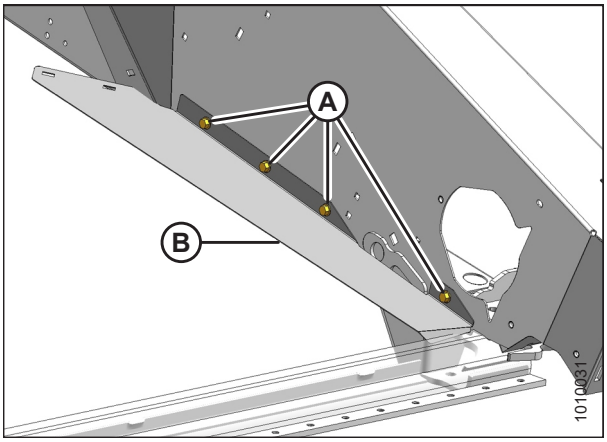

Figure 5.260: Forward Deflector – Left Side

Installing Narrow Draper Deflectors

DANGER

To avoid bodily injury or death from unexpected start-up or fall of a raised machine, always stop engine and remove key before leaving the operator's seat, and always engage safety props before going under the machine for any reason.

WARNING

Never start or move the machine until you are sure all bystanders have cleared the area.

1. Raise the reel to its full height and lower the header to the ground.
2. Move the decks manually after shutting down the combine.
3. Stop the engine, remove the key, and engage the reel safety props.
4. Open the endshield.
5. Position forward deflector (B) onto the endsheet and temporarily install forward and aft 3/8 x 5/8 in. self tapping screws (A).
6. Check the fit of the forward end of deflector (B) on the cutterbar and ensure there is no gap between the deflector and the cutterbar. Remove and bend the deflector as required to obtain the best fit.
7. Install two 3/8 x 5/8 in. self tapping screws (A) and tighten all four screws.

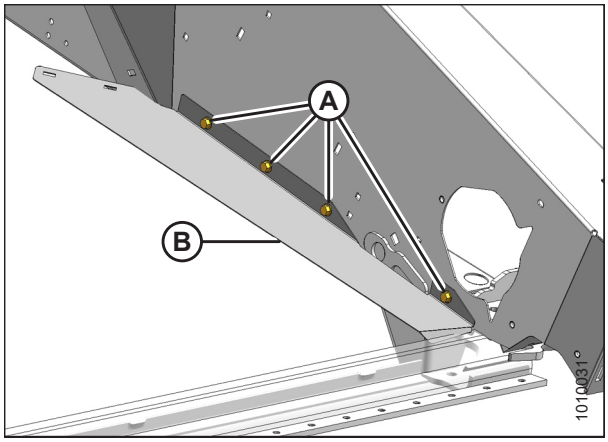

Figure 5.261: Forward Deflector

8. Position aft deflector (C) as shown and install three 3/8 x 3/4 in. carriage bolts (B) and lock nuts.
9. Install two Torx® head screws (A) and lock nuts with the heads facing down.
10. Tighten all fasteners.
11. Repeat for the opposite end of the header.

NOTE:

The draper deflector may be damaged by the reel tines if the reel height is set incorrectly. For instructions about setting the reel height, refer to *3.8.9 Reel Height, page 117*.

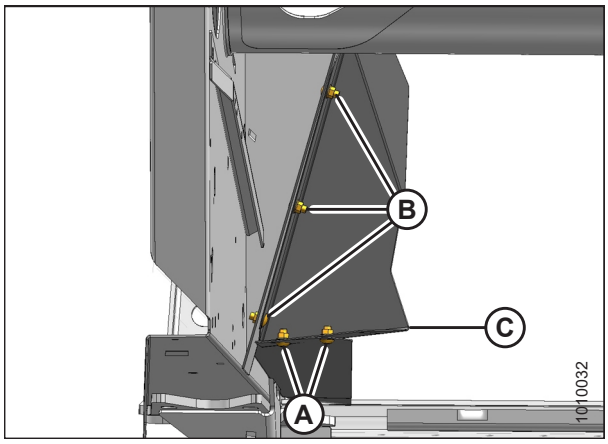

Figure 5.262: Rear Deflector – Left Side

5.13 Reel

CAUTION

To avoid personal injury, before servicing machine or opening drive covers, refer to *5.1 Preparing Machine for Servicing, page 429*.

5.13.1 Reel Clearance to Cutterbar

The minimum clearance between the reel fingers and the cutterbar ensures that the reel fingers do not contact the cutterbar during operation. The clearance is set at the factory, but some adjustment may be necessary before operation.

The finger to guard/cutterbar clearances with reels fully lowered are shown in the table below.

Table 5.3 Finger to Guard/Cutterbar Clearance

Header Width	(X) 3 mm (+/- 1/8 in.) at Reel Ends	
	Single Reel	Double Reel
6.1 m (20 ft.)	20 mm (3/4 in.)	—
7.6 m (25 ft.)	25 mm (1 in.)	—
9.1 m (30 ft.)	45 mm (1 3/4 in.)	20 mm (3/4 in.)
10.7 m (35 ft.)	60 mm (2 3/8 in.)	20 mm (3/4 in.)
12.2 m (40 ft.)	—	20 mm (3/4 in.)
13.7 m (45 ft.)	—	20 mm (3/4 in.)

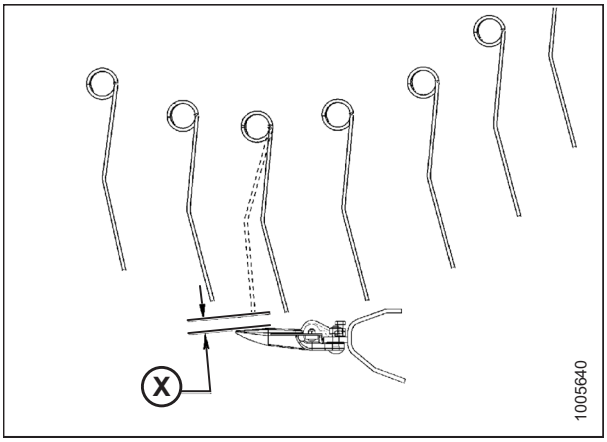

Figure 5.263: Finger Clearance

Measuring Reel Clearance

DANGER

To avoid bodily injury or death from unexpected start-up or fall of raised machine, always stop engine, remove key, and engage safety props before going under header for any reason.

WARNING

Never start or move the machine until you are sure all bystanders have cleared the area.

1. Start the engine.
2. Lower the header fully on level ground.
3. Set the fore-aft position to the middle position (**5**) on fore-aft position decal (A).
4. Lower the reel fully.
5. Shut down the engine, and remove the key from the ignition.

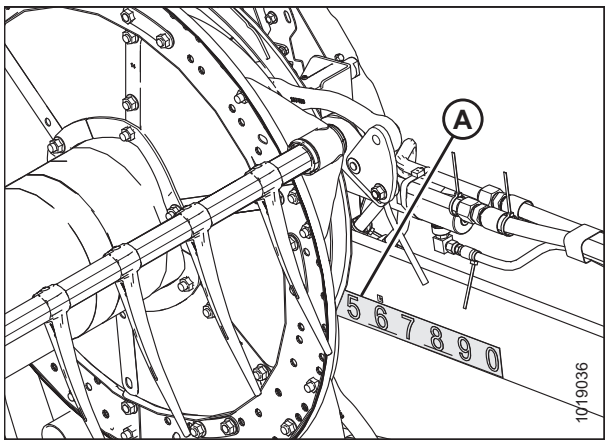

Figure 5.264: Fore-Aft Position

6. Measure clearance (X) between points (A) and (B) at certain measurement locations. For clearance specifications, refer to *5.13.1 Reel Clearance to Cutterbar, page 573*.

   For the measurement locations, refer to:

   - Figure *5.266, page 575* – single reel
   - Figure *5.267, page 575* – double reel

   NOTE:

   The reel is factory-set to provide more clearance at the center of the reel than at the ends (frown) to compensate for reel flexing.

   NOTE:

   When measuring reel clearance at the center of a double-reel header, measure the lowest reel.

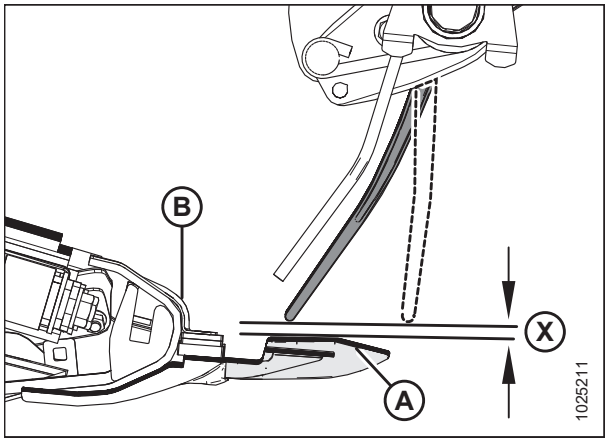

Figure 5.265: Clearance

Measurement location (A): Outer ends of the reel (two places).

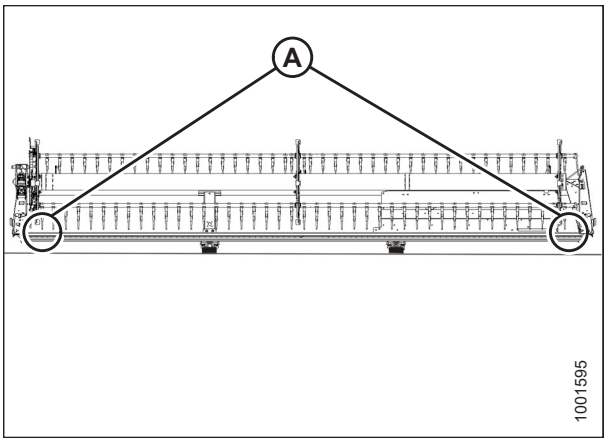

Figure 5.266: Single-Reel Measurement Locations

Measurement location (A): Both ends of both reels (four places).

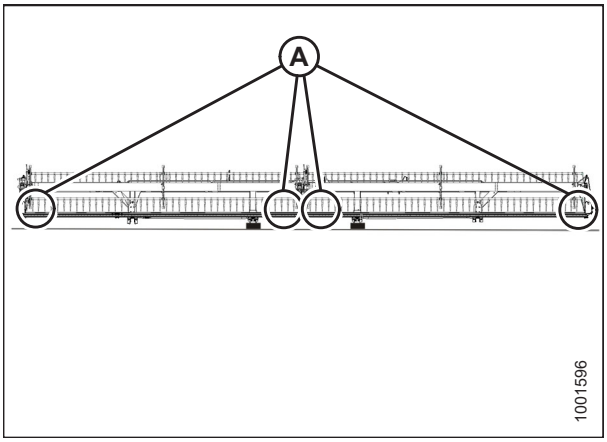

Figure 5.267: Double-Reel Measurement Locations

7. Adjust the reel clearance, if required. For instructions, refer to *Adjusting Reel Clearance, page 576*.

Adjusting Reel Clearance

DANGER

To avoid bodily injury or death from unexpected start-up or fall of raised machine, always stop engine, remove key, and engage safety props before going under header for any reason.

1. Raise the reel fully.
2. Engage the header safety props.
3. Shut down the engine, and remove the key from the ignition.
4. Adjust the outboard reel arm lift cylinders to set the clearance at the outboard ends of the reel as follows:
   a. Loosen bolt (A).
   b. Turn cylinder rod (B) out of clevis to raise reel and increase clearance to cutterbar, or turn cylinder rod into clevis to lower reel and decrease clearance.
   c. Tighten bolt (A).
   d. Repeat at opposite side.

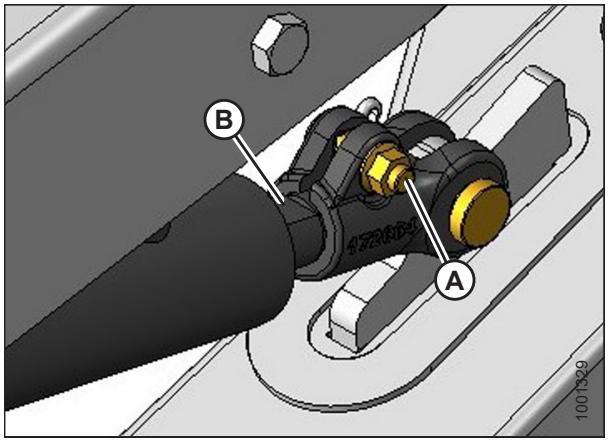

Figure 5.268: Outside Reel Arm

5. ***For double reel:*** Adjust center arm lift cylinder stop (A) to change clearance at inboard ends of reels as follows:
   a. Loosen nut (B).

      NOTE:

      To make adjustment easier, lower reel onto the safety props after loosening nut (B).

   b. Turn nut (C) counterclockwise to raise reel and increase clearance to cutterbar, or clockwise to lower reel and decrease clearance.
   c. Tighten nut (B).

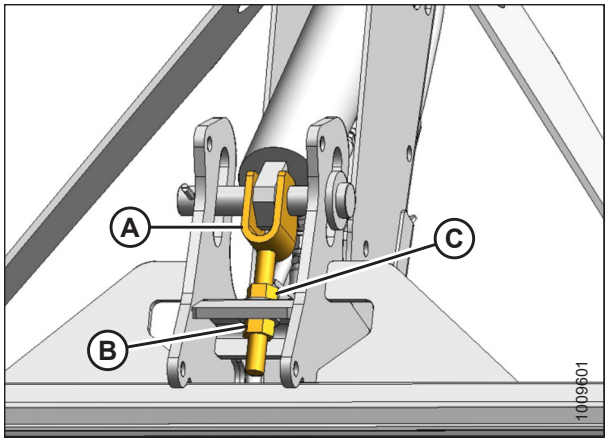

Figure 5.269: Underside of Center Arm

6. Check measurements and, if necessary, repeat adjustment procedures.
7. Move the reel back to ensure the steel end fingers do **NOT** contact the deflector shields.
8. If contact occurs, adjust the reel upward to maintain the clearance at all reel fore-aft positions. If contact cannot be avoided after adjusting the reel, trim the steel end fingers to obtain proper clearance.
9. Periodically check for evidence of contact during operation, and adjust clearance as required.
10. Shut down the engine, and remove the key from the ignition.

5.13.2 Reel Frown

The reel is factory-set to frown (providing more clearance at the center of the reel than at the ends) to compensate for reel flexing.

Adjusting Reel Frown

DANGER

To avoid bodily injury or death from unexpected startup of machine, always stop the engine and remove the key before making adjustments to the machine.

1. Position the reel over the cutterbar (between **4** and **5** on fore-aft position decal [A]) to provide adequate clearance at all reel fore-aft positions.
2. Record the measurement at each reel disc location for each reel tube.

   NOTE:

   Measure the frown profile before disassembling the reel for servicing so the profile can be maintained during reassembly.
3. Shut down the engine, and remove the key from the ignition.

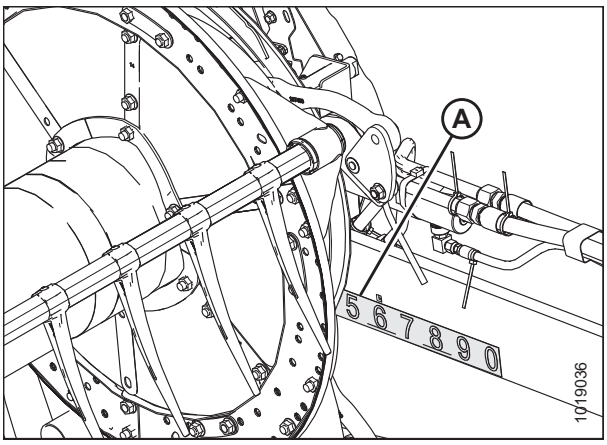

Figure 5.270: Fore-Aft Position Decal

4. Start with the reel disc closest to the center of the header and proceed outward towards the ends, adjusting the header profile as follows:
   a. Remove bolts (A).
   b. Loosen bolt (B) and adjust arm (C) until the desired measurement is obtained between the reel tube and cutterbar.

      NOTE:

      Allow the reel tubes to curve naturally and position the hardware accordingly.
   c. Reinstall bolts (A) in the aligned holes and tighten.

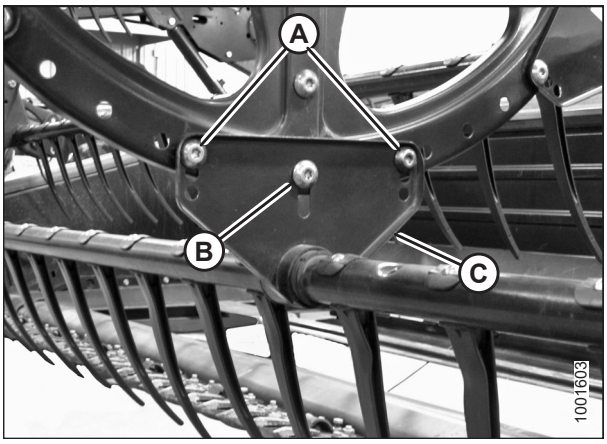

Figure 5.271: Center Reel Disc

5.13.3 Centering the Reel

WARNING

To avoid injury or death from unexpected start-up of machine, always stop the engine and remove the key from the ignition before leaving the operator's seat for any reason.

1. Start combine and lower reel and header fully.
2. Shut down the engine, and remove the key from the ignition.
3. Measure clearance at locations (A) between reel and both endsheets. The clearances should be the same if the reel is centered. To see locations (A) in greater detail, refer to Figure *5.272, page 578*.

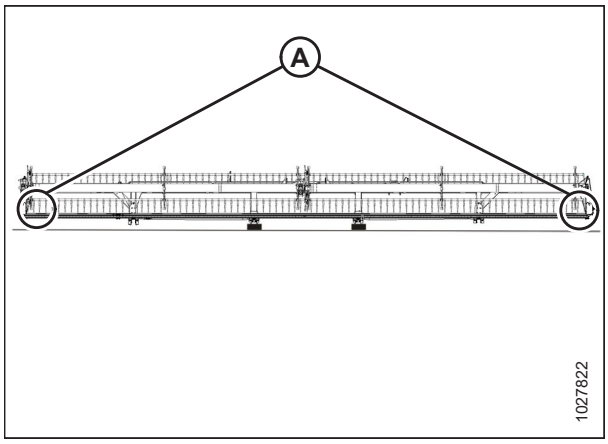

Figure 5.272: Double-Reel Measurement Locations

Centering Reel on Double-Reel Header

DANGER

To avoid bodily injury or death from unexpected startup of machine, always stop the engine and remove the key before making adjustments to the machine.

WARNING

Never start or move the machine until you are sure all bystanders have cleared the area.

1. Start the engine.
2. Raise the header enough to put 150 mm (6 in.) blocks under the outboard skid shoes.
3. Lower the header onto the blocks, the ends of the header will be higher than the center section, causing the header to smile.
4. Shut down the engine, and remove the key from the ignition.

5. Loosen bolt (A) on each brace (B).
6. Move the forward end of reel center support arm (C) laterally as required to center both reels.
7. Tighten bolts (A) and torque to 382 Nm (282 lbf·ft).

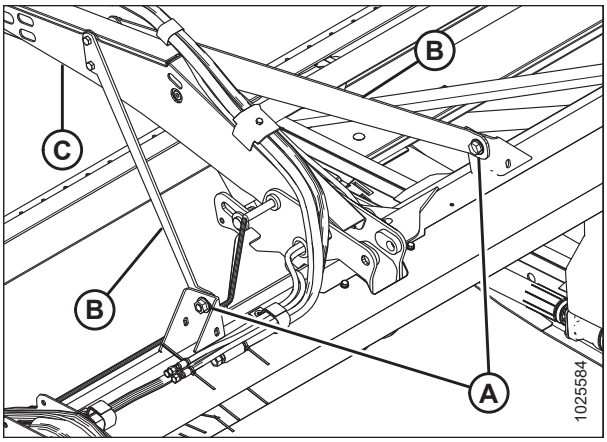

Figure 5.273: Reel Center Support Arm – Non-European Configured

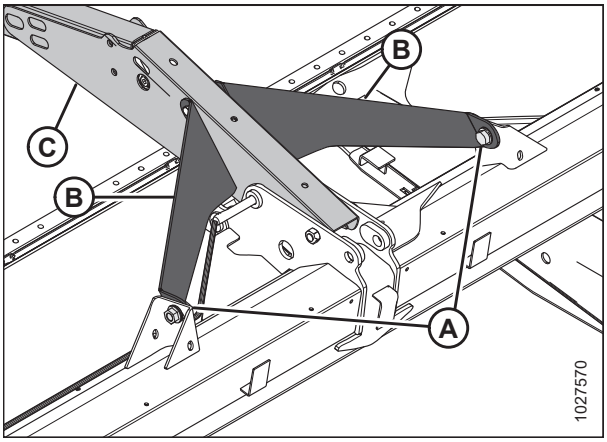

Figure 5.274: Center Support Arm and Braces – European Configured

9. Measure clearance at locations (A) between reel and both endsheets. The clearances should be the same if the reel is centered.

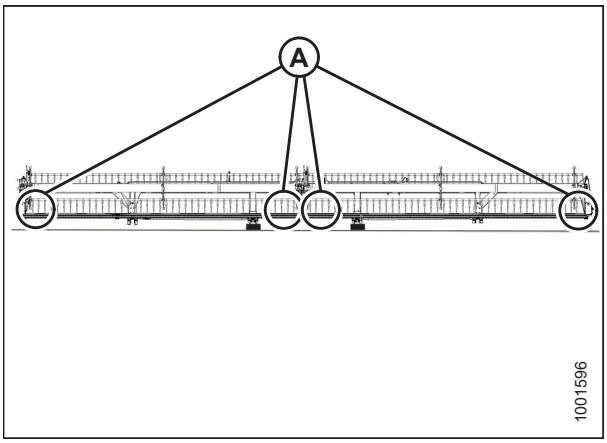

Figure 5.275: Measurement Locations

Centering Reel on a Single-Reel Header

DANGER

To avoid bodily injury or death from unexpected startup of machine, always stop the engine and remove the key before making adjustments to the machine.

1. Loosen bolt (A) on brace (B) at both ends of the reel.
2. Move the forward end of reel support arm (C) laterally as required to center the reel.
3. Tighten bolt (A) and torque to 359 Nm (265 lbf·ft). Repeat at opposite side.

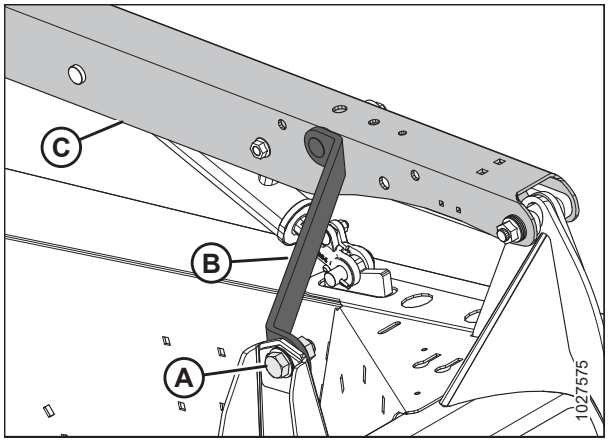

Figure 5.276: Reel Support Arm

5.13.4 Reel Fingers

IMPORTANT:

Keep the reel fingers in good condition and straighten or replace them as necessary.

Removing Steel Fingers

WARNING

To avoid injury or death from unexpected start-up of machine, always stop the engine and remove the key from the ignition before leaving the operator's seat for any reason.

WARNING

To avoid bodily injury from fall of raised reel, always engage reel safety props before going under raised reel for any reason.

IMPORTANT:

Ensure the tine tube is supported at all times to prevent damaging it and other components.

1. Lower the header, raise the reel, and engage the reel safety props.
2. Shut down the engine, and remove the key from the ignition.
3. Remove the tine tube bushings from the applicable tine tube at the center and left reel discs. For instructions, refer to *Removing Bushings from Reels, page 585*.
4. Attach tine tube arms (B) to the reel disc at original attachment locations (A).
5. Cut the damaged finger so it can be removed from the tine tube.
6. Remove bolts from the existing fingers and slide the fingers over to replace the finger that was cut off in Step *5, page 581* (remove tine tube arms [B] from the tine tubes as necessary).

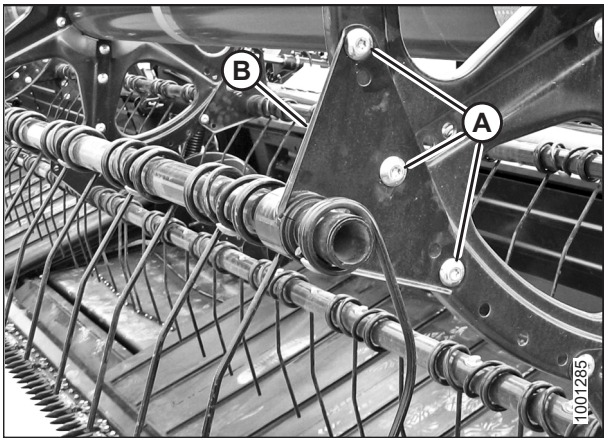

Figure 5.277: Tine Tube Arm

Installing Steel Fingers

WARNING

To avoid injury or death from unexpected start-up of machine, always stop the engine and remove the key from the ignition before leaving the operator's seat for any reason.

WARNING

To avoid bodily injury from fall of raised reel, always engage reel safety props before going under raised reel for any reason.

IMPORTANT:

Ensure the tine tube is supported at all times to prevent damage to the tube and other components.

NOTE:

This procedure assumes a finger has already been removed from the machine. For instructions about removing fingers, refer to *Removing Steel Fingers, page 581*.

1. Slide the new finger and tine tube arm (A) onto the end of the tube.
2. Install the tine tube bushings. For instructions, refer to *Installing Bushings onto Reels, page 591*.
3. Attach the fingers to the tine tube with bolts and nuts (B).

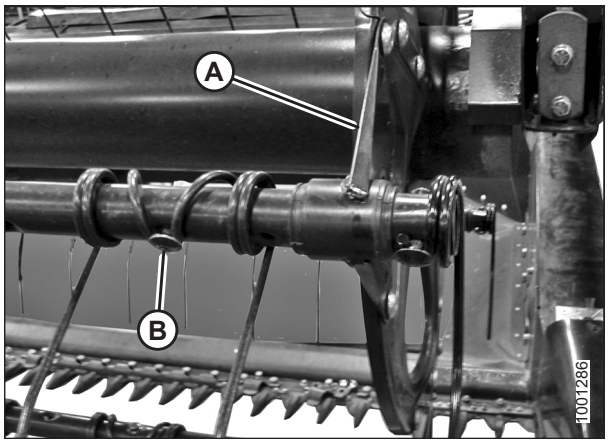

Figure 5.278: Tine Tube

Removing Plastic Fingers

DANGER

To avoid bodily injury or death from unexpected startup of machine, always stop the engine and remove the key before making adjustments to the machine.

WARNING

To avoid bodily injury from fall of raised reel, always engage reel safety props before going under raised reel for any reason.

1. Lower the header, raise the reel, and engage the reel safety props.
2. Shut down the engine, and remove the key from the ignition.
3. Remove screw (A) using a Torx® Plus 27 IP socket wrench.

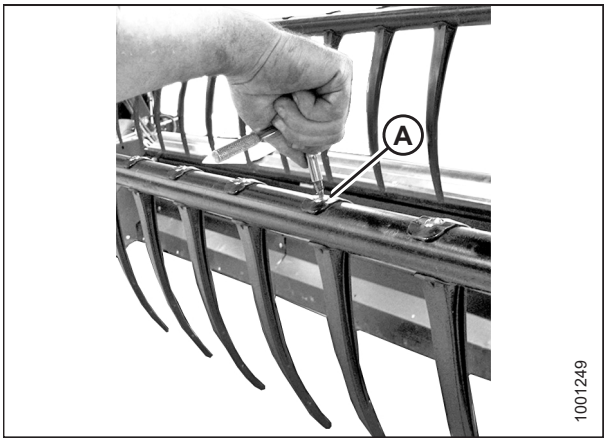

Figure 5.279: Removing Plastic Finger

4. Push the clip at the top of the finger back towards the reel tube as shown and remove the finger from the tube.



Figure 5.280: Removing Plastic Finger

Installing Plastic Fingers

WARNING

To avoid injury or death from unexpected start-up of machine, always stop the engine and remove the key from the ignition before leaving the operator's seat for any reason.

WARNING

To avoid bodily injury from fall of raised reel, always engage reel safety props before going under raised reel for any reason.

NOTE:

This procedure assumes a finger has already been removed from the machine. Refer to *Removing Plastic Fingers, page 583* for instructions on removing fingers.

1. Position the new finger on the rear of the tine tube. Engage the lug at the bottom of the finger in the lower hole in the tine tube.
2. Lift the top flange gently and rotate the finger as shown until the lug in the top of the finger engages the upper hole in the tine tube.



Figure 5.281: Installing Plastic Finger

IMPORTANT:

Do **NOT** apply force to the finger prior to tightening the mounting screw. Applying force without tightening the mounting screw will break the finger or shear the locating pins.

3. Install screw (A) using a Torx® Plus 27 IP socket wrench and torque to 8.5–9.0 Nm (75–80 lbf·in).

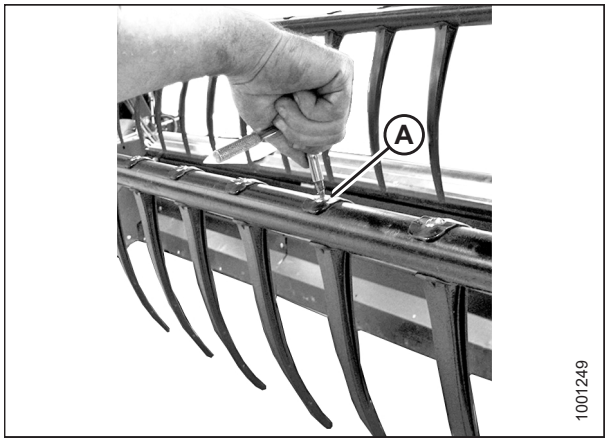

Figure 5.282: Installing Plastic Finger

5.13.5 Tine Tube Bushings

Removing Bushings from Reels

Bushing are located at the point where the reel tine connects to the reel disc.

DANGER

To avoid bodily injury or death from unexpected startup of machine, always stop the engine and remove the key before making adjustments to the machine.

WARNING

To avoid bodily injury from fall of raised reel, always engage reel safety props before going under raised reel for any reason.

IMPORTANT:

Ensure the tine tube is supported at all times to prevent damage to the tube and other components.

1. Lower the header, raise the reel, and engage the reel safety props.
2. Shut down the engine, and remove the key from the ignition.

   NOTE:

   If replacing only the cam end bushing, proceed to Step *8, page 587*.

Center disc and tail end bushings

3. Remove the reel endshields and endshield support (C) from the tail end of the reel at the applicable tine tube location.

   NOTE:

   There are no endshields on the center disc.

4. Remove bolts (A) securing tine tube arm (B) to the disc.

   IMPORTANT:

   Note the hole locations in the arm and disc and ensure bolts (A) are reinstalled at the original locations.

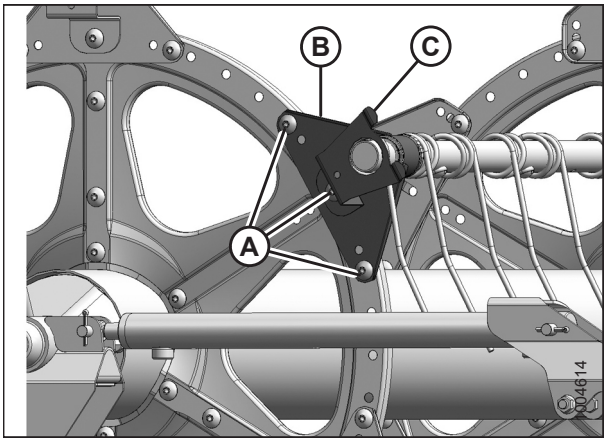

Figure 5.283: Tail End

5. Release bushing clamps (A) using a small screwdriver to separate the serrations. Pull the clamp off the tine tube.

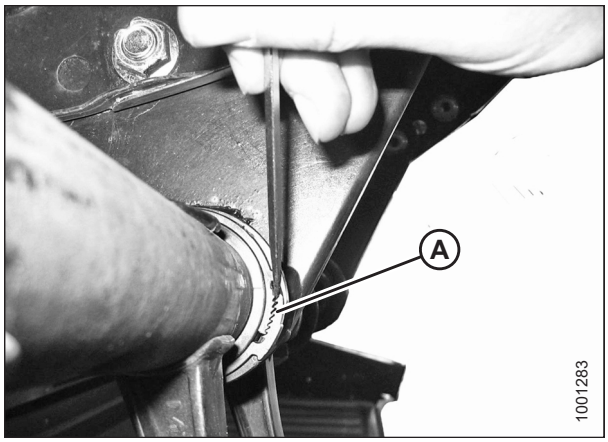

Figure 5.284: Bushing Clamp

6. Rotate tine tube arm (A) until clear of the disc and slide the arm inboard off of bushing (B).
7. Remove bushing halves (B). If required, remove the next steel or plastic finger, so the arm can slide off the bushing. Refer to the following procedures as necessary:
   - *Removing Plastic Fingers, page 583*
   - *Removing Steel Fingers, page 581*

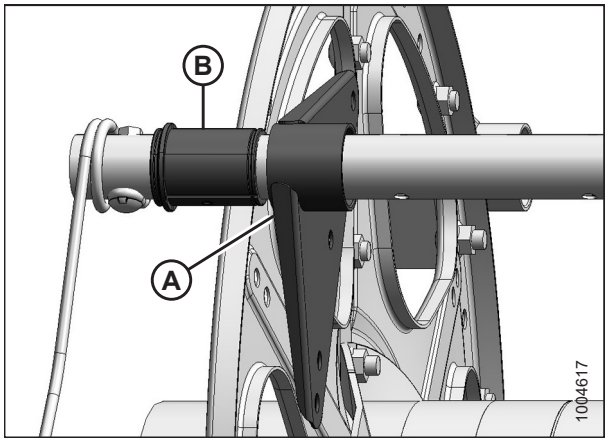

Figure 5.285: Bushing

Cam end bushings

8. Remove the endshields and endshield support (A) at the applicable tine tube location on the cam end.

   NOTE:

   Removing cam end bushings requires the tine tube to be moved through the disc arms to expose the bushing.

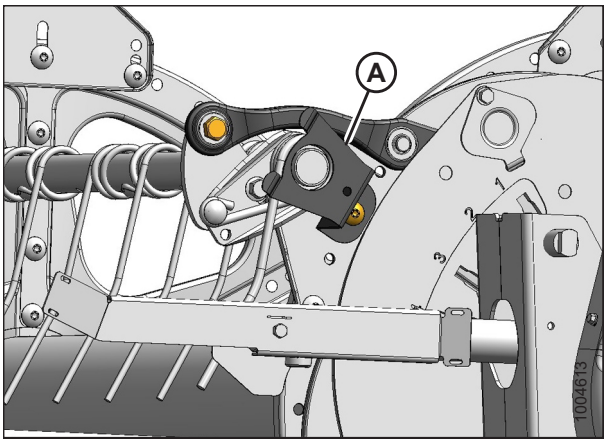

Figure 5.286: Cam End

9. Remove the reel endshields and endshield support (C) from the tail end of the reel at the applicable tine tube location.

   NOTE:

   There are no endshields on the center disc.

10. Remove bolts (A) securing tine tube arms (B) to the tail and center discs.

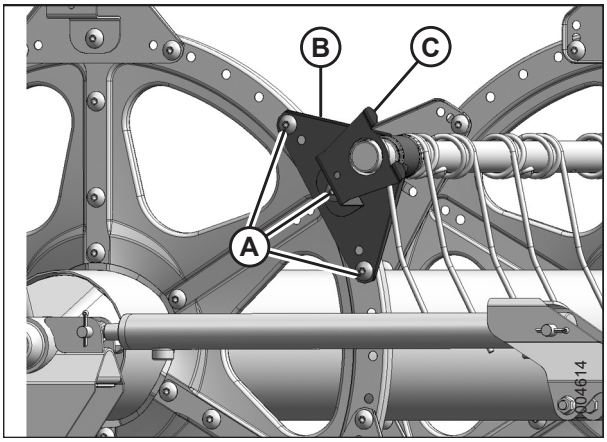

Figure 5.287: Tail End

Tine tube reinforcing kit (option)[51]

11. Release the bushing clamps or disconnect the support channels from the tine tube support (if installed) depending on which tine tube is being moved. Three tine tubes (A) require channel disconnection and two tine tubes (B) require only bushing clamp removal.

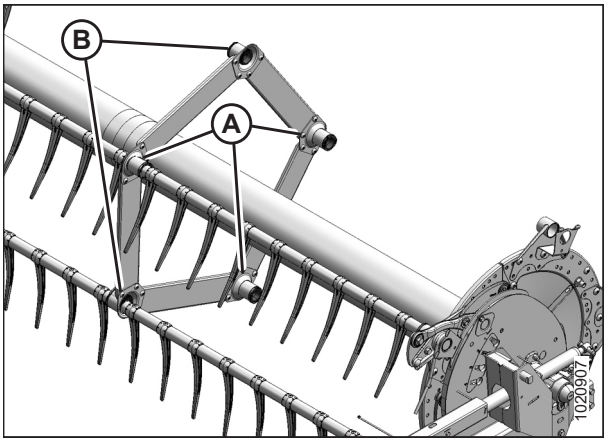

Figure 5.288: Tine Tube Supports

51. 5-Bat Reel MD #B5825, 6-Bat Reel MD #B5826.

12. Remove bolt (A) from the cam linkage so tine tube (B) is free to rotate.

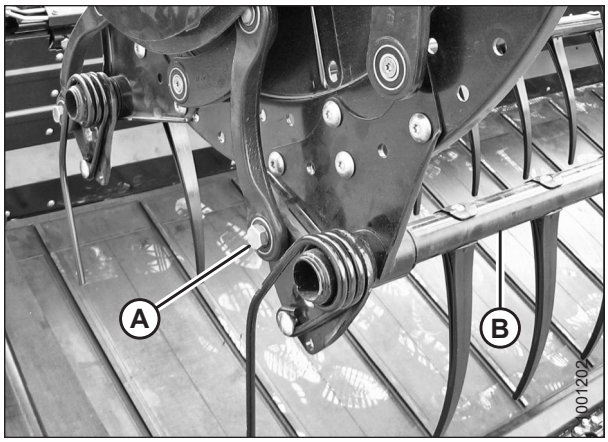

Figure 5.289: Cam End

13. Release bushing clamps (A) at the cam disc using a small screwdriver to separate the serrations. Move the clamps off the bushings.

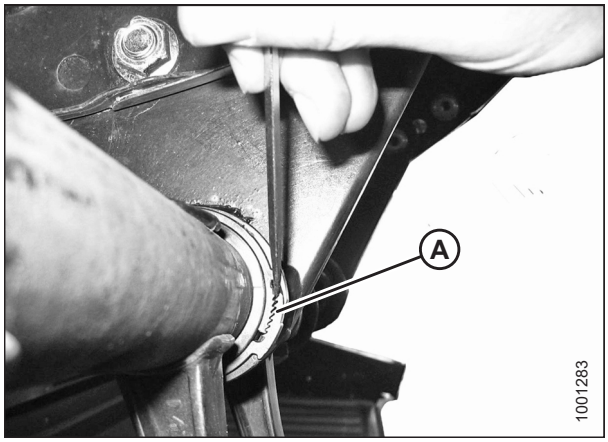

Figure 5.290: Bushing Clamp

14. Slide tine tube (A) outboard to expose bushing (B).
15. Remove bushing halves (B). If required, remove the next steel or plastic finger so the arm can slide off the bushing. Refer to the following procedures if necessary:
    - *Removing Plastic Fingers, page 583*
    - *Removing Steel Fingers, page 581*

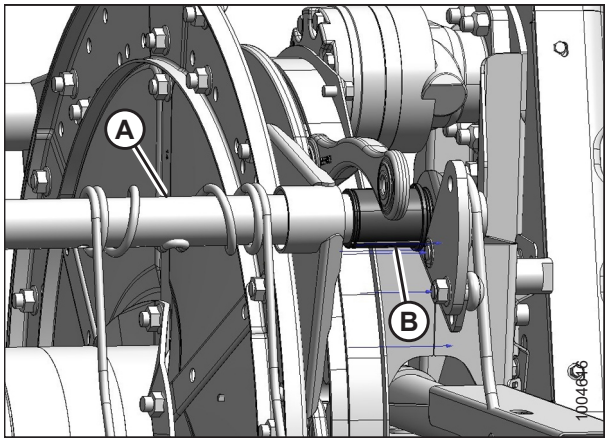

Figure 5.291: Cam End

Tine tube reinforcing kit bushings (option)

16. Locate support (A) that requires a new bushing.
17. Remove four bolts (B) securing channel (C) to support (A).
18. Remove screw (E) and remove finger (D) if it is too close to the support to allow access to the bushing. For instructions, refer to *Removing Plastic Fingers, page 583* or *Removing Steel Fingers, page 581*.

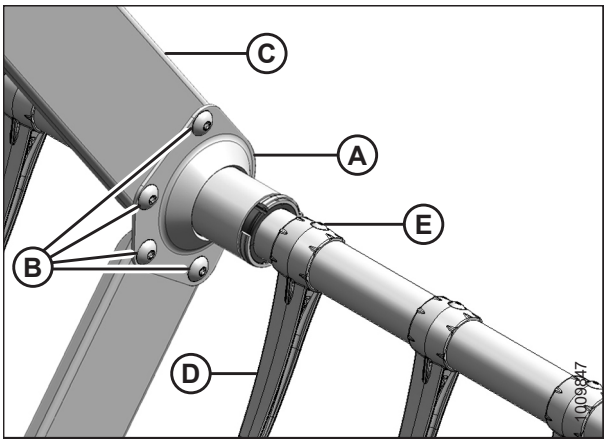

Figure 5.292: Tine Tube Support

19. Release bushing clamps (A) using a small screwdriver to separate the serrations.

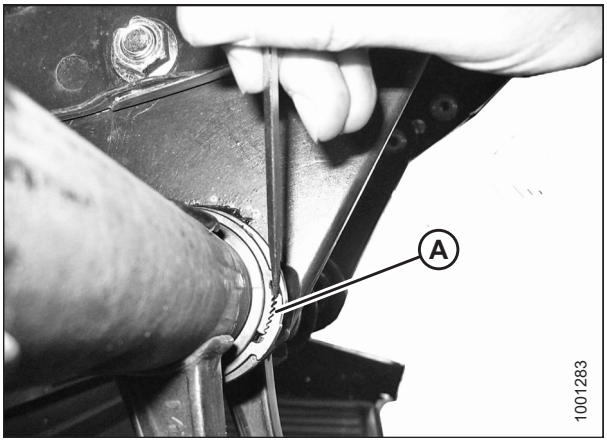

Figure 5.293: Bushing Clamp

20. Move clamps (A) off the bushings.

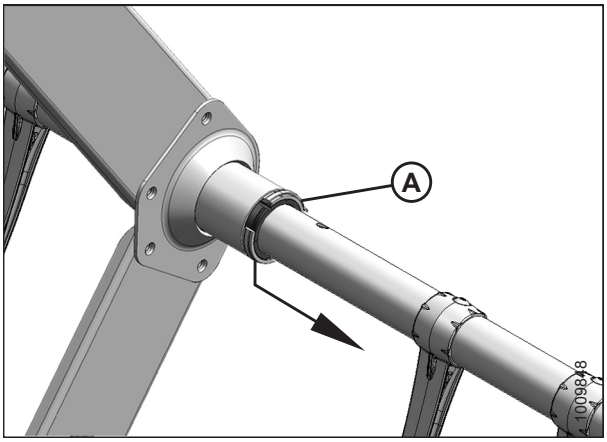

Figure 5.294: Tine Tube Reinforcing Kit Bushing Clamp (Option)

21. On each reel, there are three right-facing supports (A). Slide the support off bushing halves (B).

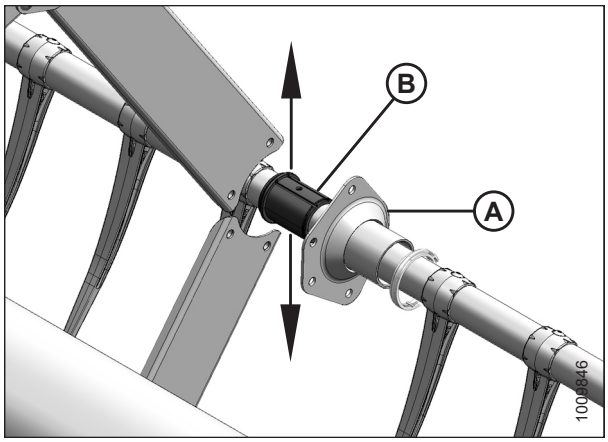

Figure 5.295: Tine Tube Reinforcing Kit Support (Option)

22. On each reel, there are two left-facing supports (A). Rotate the supports until the flanges clear the channels before moving them off bushing (B). Move the tube slightly away from the reel if necessary.
23. Remove bushing halves (B) from the tine tubes.

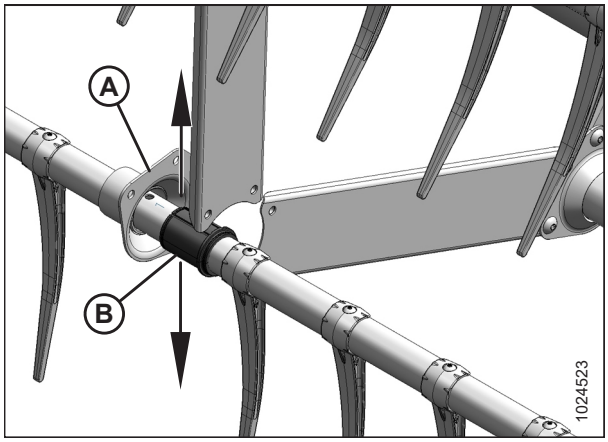

Figure 5.296: Tine Tube Reinforcing Kit Opposite Support (Option)

Installing Bushings onto Reels

NOTE:

This procedure assumes the steps for *Removing Bushings from Reels, page 585* have been completed.

WARNING

To avoid bodily injury from fall of raised reel, always engage reel safety props before going under raised reel for any reason.

IMPORTANT:

Ensure the tine tube is supported at all times to prevent damage to the tube or other components.

Use a pair of modified channel lock pliers (A) to install bushing clamps (C). Secure pliers in a vise and grind a notch (B) into the end of each arm to fit the clamp as shown.

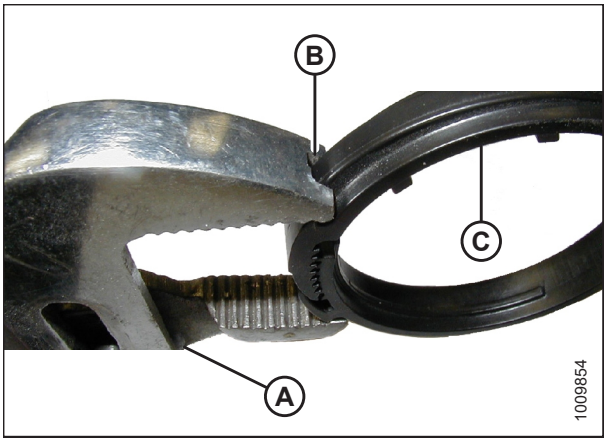

Figure 5.297: Modified Channel Lock Pliers

Cam end bushings

1. Position bushing halves (B) on tine tube (A) with the flangeless end adjacent to the tine tube arm, and position the lug in each bushing half into the hole in the tine tube.
2. Slide tine tube (A) towards the tail end of the reel to insert bushing (B) into the tine tube arm. If the tine tube supports are installed, ensure the bushings at those locations slide into the support.
3. Reinstall the previously removed fingers. Refer to the following procedures as necessary:
   - *Removing Plastic Fingers, page 583*
   - *Removing Steel Fingers, page 581*

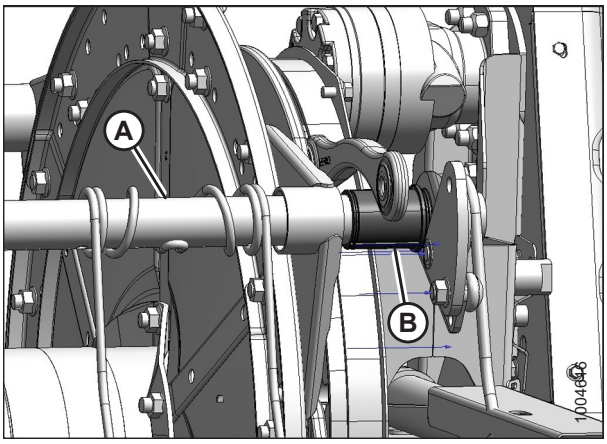

Figure 5.298: Cam End

4. Install bushing clamp (A) onto the tine tube adjacent to the flangeless end of bushing (B).
5. Position clamp (A) on bushing (B) so the edges of the clamp and bushing are flush when the clamp is fit into the groove on the bushing and the lock tabs are engaged.

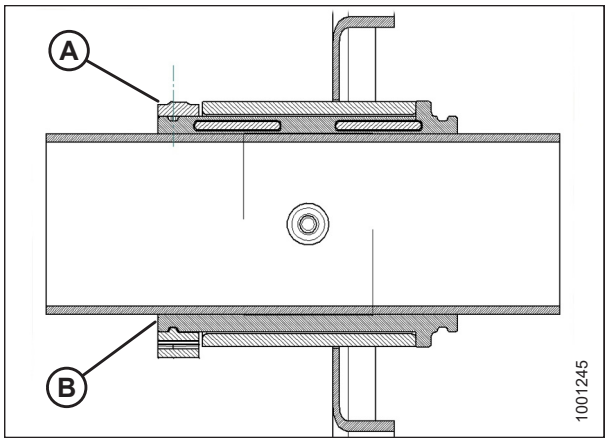

Figure 5.299: Bushing

6. Tighten clamp (A) using modified channel lock pliers (B) until finger pressure will **NOT** move the clamp.

   IMPORTANT:

   Overtightening clamp may result in breakage.

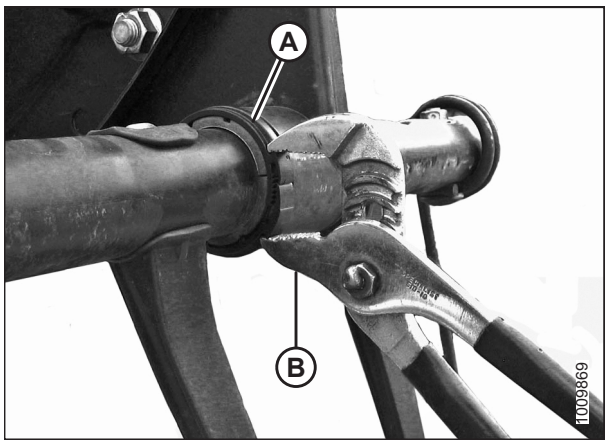

Figure 5.300: Installing Clamp

7. Line up tine tube (B) with the cam arm and install bolt (A). Torque bolt to 165 Nm (120 lbf·ft).

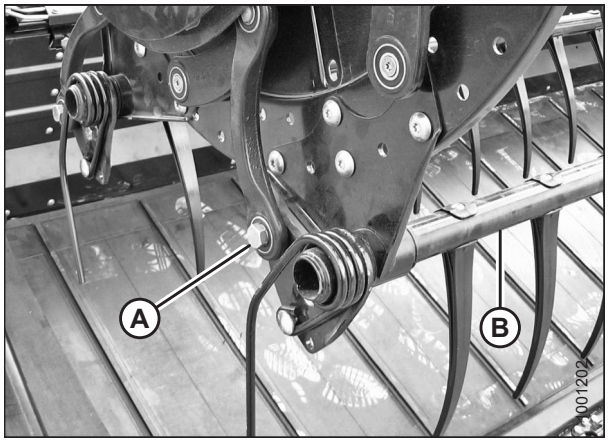

Figure 5.301: Cam End

8. Install bolts (A) securing tine tube arm (B) to the center disc.
9. Install tine tube arm (B) and endshield support (C) to the tail end of the reel at the applicable tine tube location and secure with bolts (A).

   NOTE:

   There are no endshields on the center discs.

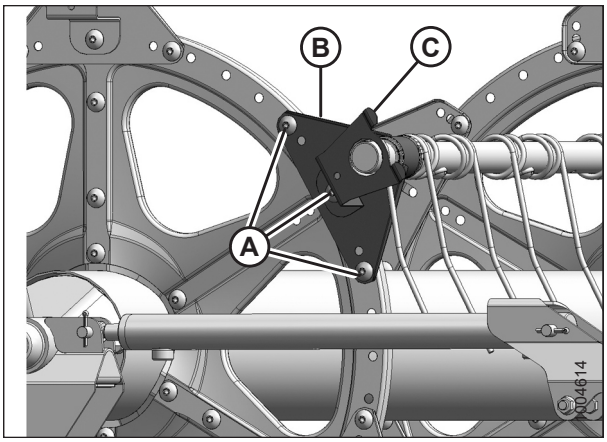

Figure 5.302: Tail End

10. Install endshield support (A) at the applicable tine tube location at the cam end.
11. Reinstall the reel endshields. For instructions, refer to *Replacing Reel Endshields, page 598*.

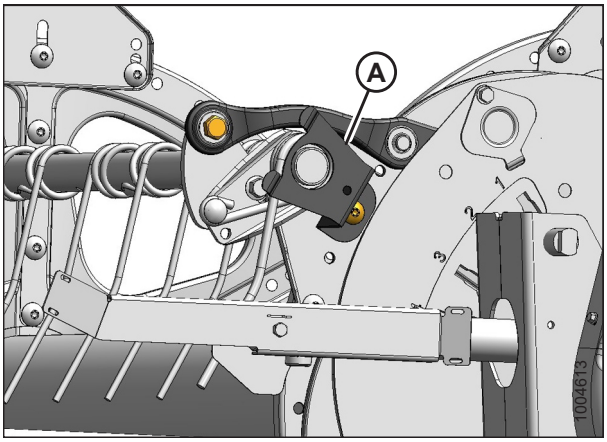

Figure 5.303: Cam End

Center disc and tail end bushings

12. Position bushing halves (B) on tine tube (A) with the flangeless end adjacent to the tine tube arm, and position the lug in each bushing half into the hole in the tine tube.
13. Slide tine tube (A) onto bushing (B) and position against the disc at the original location.
14. Reinstall the previously removed fingers. For instructions, refer to:
    - *Removing Plastic Fingers, page 583*
    - *Removing Steel Fingers, page 581*

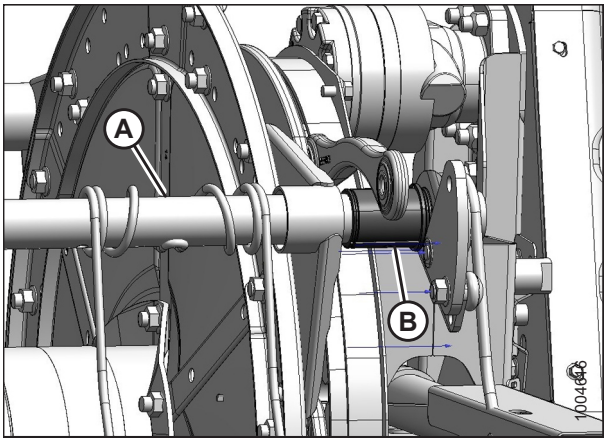

Figure 5.304: Cam End

15. Install bushing clamp (A) onto the tine tube adjacent to the flangeless end of bushing (B).
16. Position clamp (A) on bushing (B) so the edges of the clamp and bushing are flush when the clamp is fit into the groove on the bushing and the lock tabs are engaged.

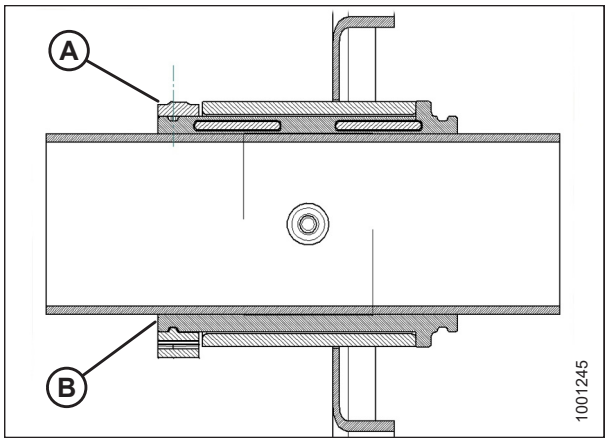

Figure 5.305: Bushing

17. Tighten clamp (A) using modified channel lock pliers (B) until finger pressure will **NOT** move the clamp.

    IMPORTANT:

    Overtightening clamp may result in breakage.

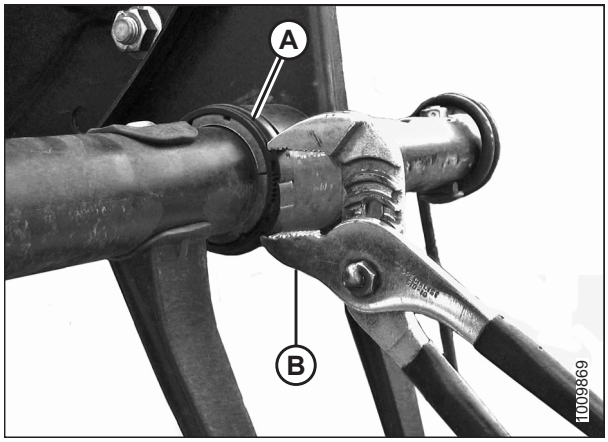

Figure 5.306: Installing Clamp

18. Install bolts (A) securing tine tube arm (B) to the center disc.
19. Install tine tube arm (B) and endshield support (C) to the tail end of the reel at the applicable tine tube location and secure with bolts (A).

    NOTE:

    There are no endshields on the center discs.

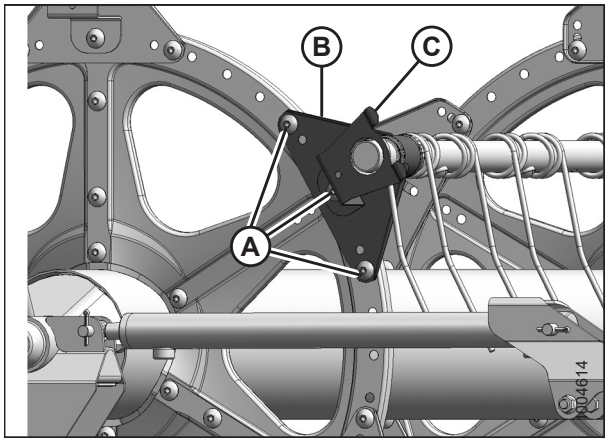

Figure 5.307: Tail End

Tine tube reinforcing kit (option)[52]

20. Position bushing halves (B) on tine tube (A) with the flangeless end adjacent to the tine tube arm, and position the lug in each bushing half into the hole in the tine tube.

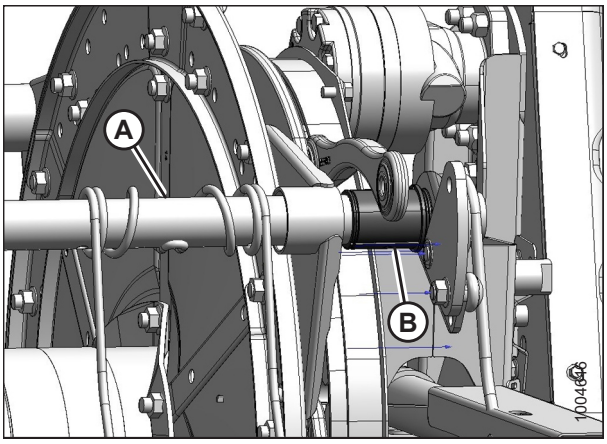

Figure 5.308: Cam End

21. On each reel, there are three right-facing supports (A). Slide the support onto bushing (B).

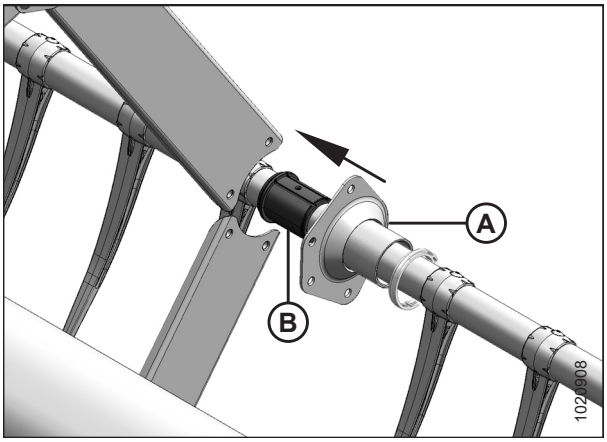

Figure 5.309: Tine Tube Reinforcing Kit Support (Option)

22. On each reel, there are two left-facing supports (A). Rotate support (A) until its flanges clear channels (C) before moving the support onto bushing (B).

    NOTE:

    If necessary, move tine tube (D) slightly away from the reel to allow the support flange enough room to clear the channel.

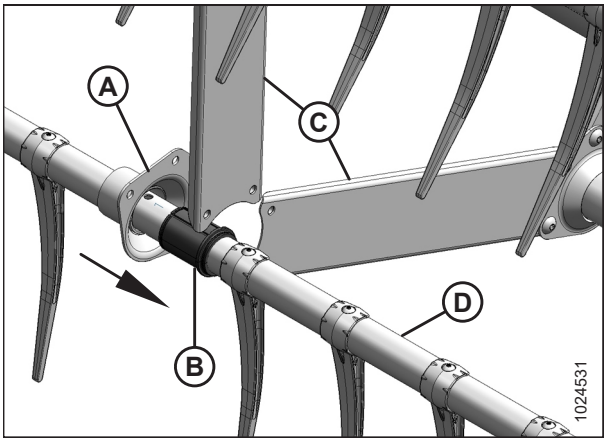

Figure 5.310: Tine Tube Reinforcing Kit Opposite Support (Option)

52. 5-bat reel (MD #B5825), 6-bat reel (MD #B5826).

23. Install bushing clamp (A) onto the tine tube adjacent to the flangeless end of bushing (B).
24. Position clamp (A) on bushing (B) so the edges of the clamp and bushing are flush when the clamp is fit into the groove on the bushing and the lock tabs are engaged.

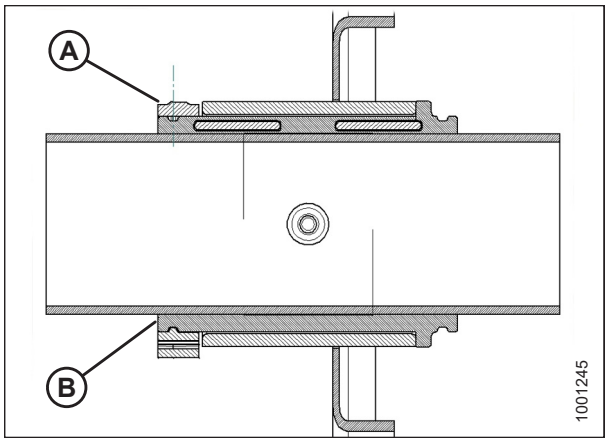

Figure 5.311: Bushing

25. Tighten clamp (A) using modified channel lock pliers (B) until finger pressure will **NOT** move the clamp.

    IMPORTANT:

    Overtightening clamp may result in breakage.

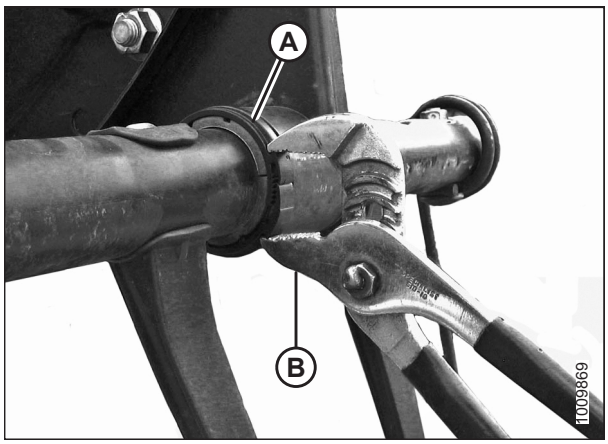

Figure 5.312: Installing Clamp

26. Reattach channels (C) to the three right-facing supports (A) on each reel with screws (B) and nuts. Torque screws to 43 Nm (32 lbf·ft).
27. Using screws (E), reinstall any fingers (D) that were previously removed. Refer to:
    - *Installing Plastic Fingers, page 584*
    - *Installing Steel Fingers, page 582*

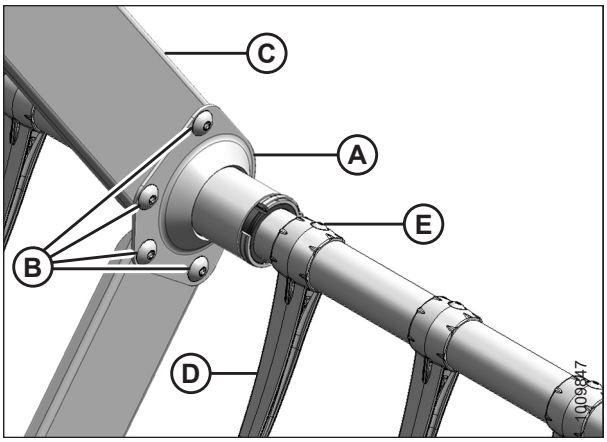

Figure 5.313: Tine Tube Reinforcing Kit Support (Option)

28. Reattach channels (C) to two left-facing supports (A) on each reel with screws (B) and nuts. Torque screws to 43 Nm (32 lbf·ft).
29. Using screws (E), reinstall any fingers (D) that were previously removed. For instructions, refer to:
    - *Installing Plastic Fingers, page 584*
    - *Installing Steel Fingers, page 582*

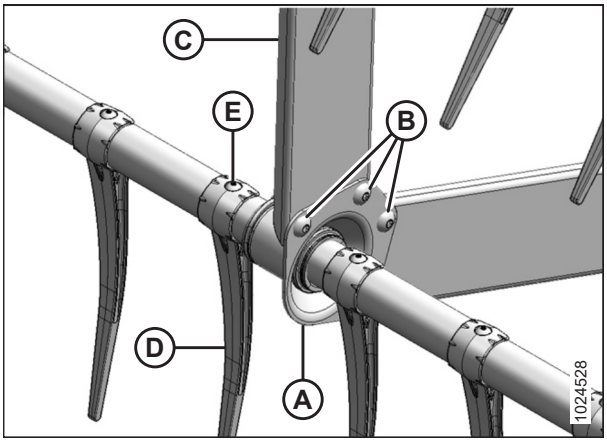

Figure 5.314: Tine Tube Reinforcing Kit Opposite Support (Option)

5.13.6 Reel Endshields

Reel endshields and supports do not require regular maintenance, but they should be checked periodically for damage and loose or missing fasteners. Slightly dented or deformed endshields and supports are repairable, but it's necessary to replace severely damaged components.

You can attach reel endshields to either end of the reel.

Replacing Reel Endshields

WARNING

To avoid injury or death from unexpected start-up of machine, always stop the engine and remove the key from the ignition before leaving the operator's seat for any reason.

1. Lower the header and reel.
2. Shut down the engine, and remove the key from the ignition.
3. Rotate the reel manually until reel endshield (A) requiring replacement is accessible.
4. Remove three bolts (B).

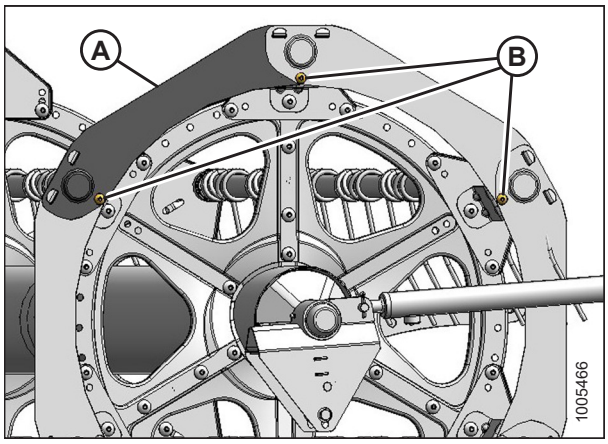

Figure 5.315: Reel Endshields

5. Lift the end of reel endshield (A) off support tabs (B).

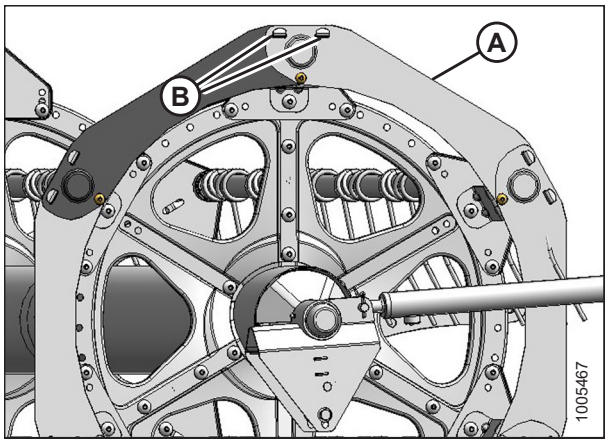

Figure 5.316: Reel Endshields

6. Remove the reel endshield from the supports.

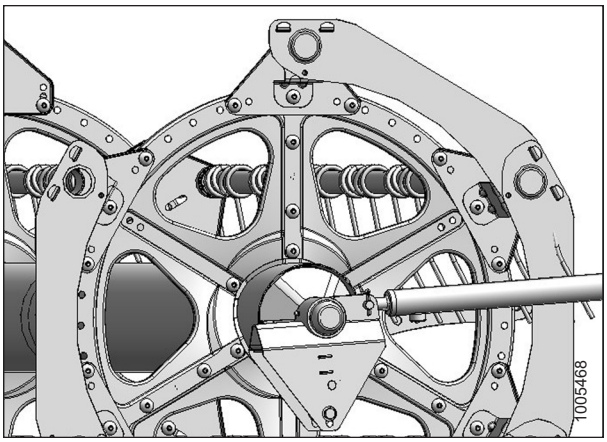

Figure 5.317: Reel Endshield Remove

7. Slightly lift the end of reel endshield (A) off of support tabs (B).
8. Install new reel endshield (C), behind reel endshield (A).
9. Reattach reel endshield (C), then (A) onto support tabs (B).
10. Reinstall three bolts (D).
11. Tighten all hardware.

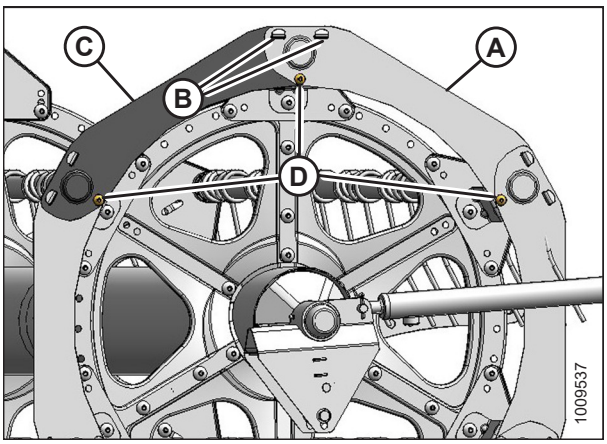

Figure 5.318: Reel Endshields

Replacing Reel Endshield Supports

WARNING

To avoid injury or death from unexpected start-up of machine, always stop the engine and remove the key from the ignition before leaving the operator's seat for any reason.

1. Lower the header and reel.
2. Shut down the engine, and remove the key from the ignition.
3. Rotate the reel manually until the reel endshield support requiring replacement is accessible.
4. Remove bolt (B) from support (A).
5. Remove bolts (C) from support (A) and two adjacent supports.

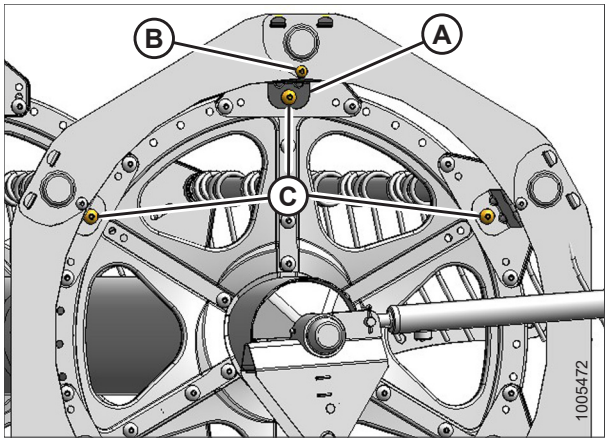

Figure 5.319: Reel Endshield Supports

6. Move reel endshields (A) away from the tine tube and rotate support (B) towards the reel to remove it.
7. Insert tabs of new support (B) into the slots in reel endshields (A). Ensure the tabs engage both reel endshields.
8. Secure support (B) to the disc sector with bolt (C) and nut. Do **NOT** tighten.
9. Secure reel endshields (A) to support (B) with bolt (D) and nut. Do **NOT** tighten.
10. Reattach the supports with bolts (E) and nuts.
11. Check the clearance between the tine tube and reel endshield support and adjust if necessary.
12. Torque nuts to 27 Nm (20 lbf·ft).

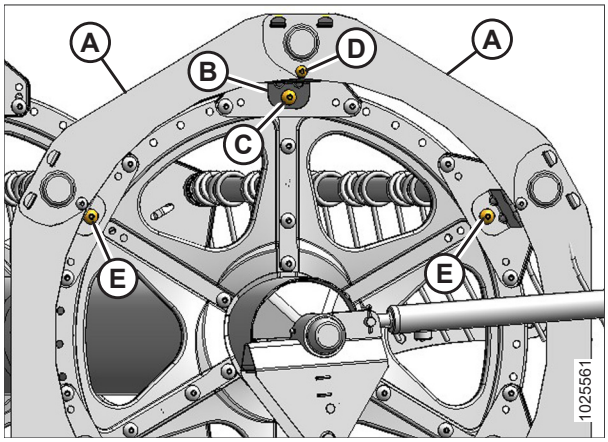

Figure 5.320: Reel Endshield Supports

5.14 Reel Drive

The hydraulically driven reel motor drives the chain that is attached to the right end of the reel on a single-reel header, and between the reels on a double-reel header.

5.14.1 Reel Drive Cover

The reel drive cover protects the reel drive components from dirt and debris.

Removing Reel Drive Cover

WARNING

To avoid injury or death from unexpected start-up of machine, always stop the engine and remove the key from the ignition before leaving the operator's seat for any reason.

1. Shut down the engine, and remove the key from the ignition.

Single-reel drive:

2. Remove four bolts (A) securing cover (B) to the reel drive.

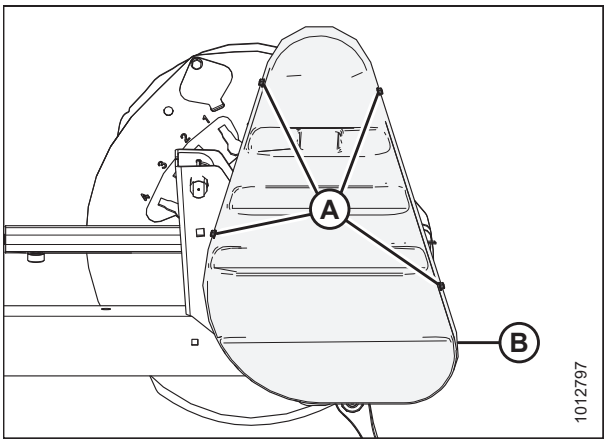

Figure 5.321: Drive Cover – Single Reel

Double-reel drive:

3. Remove six bolts (A) securing upper cover (B) to the reel drive and lower cover (C).
4. Remove upper cover (B).

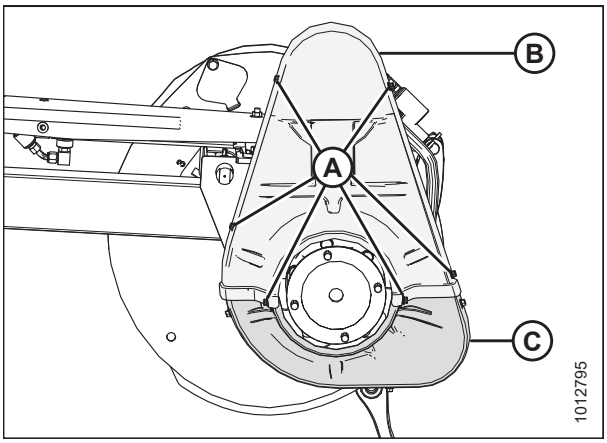

Figure 5.322: Drive Cover – Double Reel

5. Remove three bolts (A) and remove lower cover (B) if necessary.

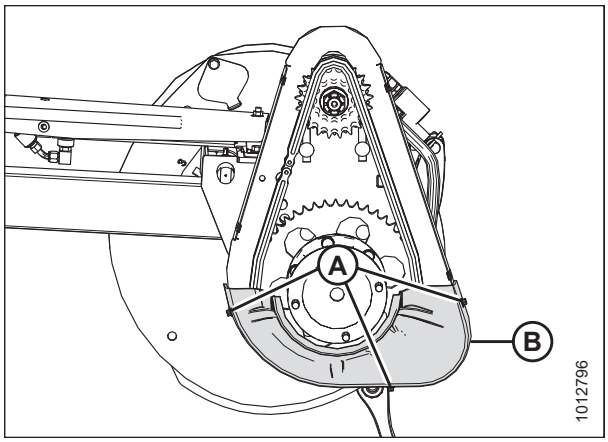

Figure 5.323: Lower Drive Cover

Installing Reel Drive Cover

WARNING

To avoid injury or death from unexpected start-up of machine, always stop the engine and remove the key from the ignition before leaving the operator's seat for any reason.

1. Shut down the engine, and remove the key from the ignition.

Single-reel drive:

2. Position drive cover (B) onto the reel drive, and secure with four bolts (A). Torque bolts to 12–13.2 Nm (9–10 lbf·ft).

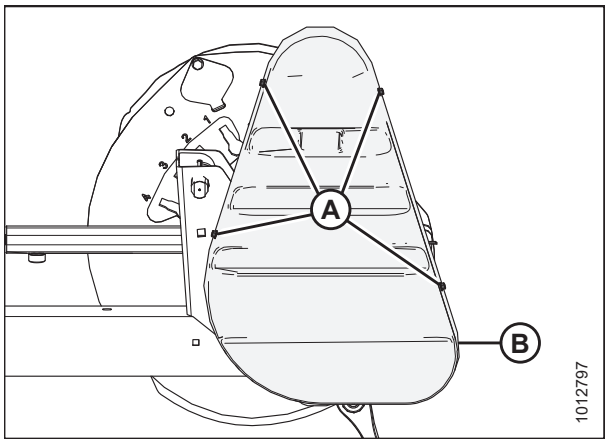

Figure 5.324: Drive Cover – Single Reel

Double-reel drive:

3. Position lower drive cover (B) onto the reel drive (if previously removed), and secure with three bolts (A). Torque bolts to 12–13.2 Nm (9–10 lbf·ft).

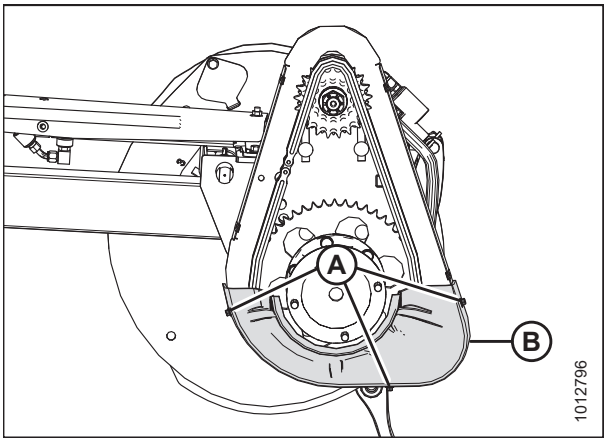

Figure 5.325: Lower Drive Cover – Double Reel

4. Position upper drive cover (B) onto the reel drive and lower cover (C), and secure with six bolts (A). Torque bolts to 12–13.2 Nm (9–10 lbf·ft).

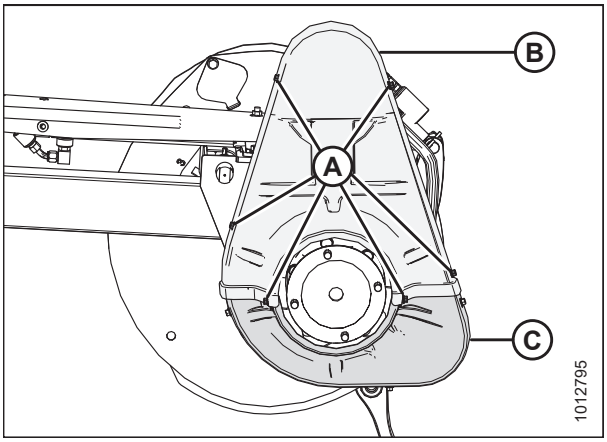

Figure 5.326: Drive Cover – Double Reel

5.14.2 Reel Drive Chain Tension

Loosening Reel Drive Chain

DANGER

To avoid bodily injury or death from unexpected startup of machine, always stop the engine and remove the key before making adjustments to the machine.

1. Lower the header fully.
2. Adjust the reel to full forward position for easier access to the work area.
3. Shut down the engine, and remove the key from the ignition.
4. Remove the drive cover. For instructions, refer to *Removing Reel Drive Cover, page 601*.
5. Loosen six nuts (A).

   NOTE:

   Parts removed from illustration for clarity.
6. Slide motor (B) and motor mount (C) down towards the reel shaft.

   IMPORTANT:

   Do **NOT** operate the reel with the reel cover removed.
7. To retighten the drive chain, refer to *Tightening Reel Drive Chain, page 604*.

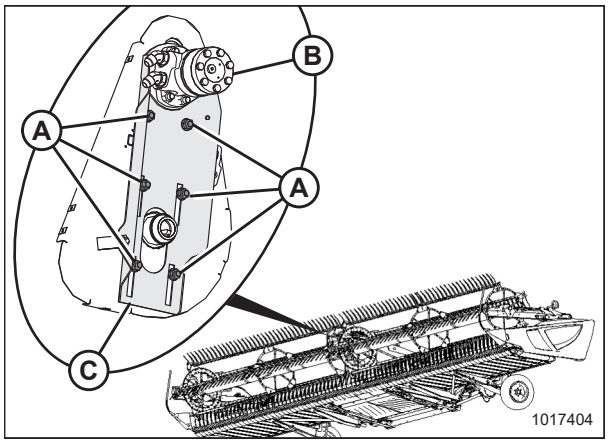

Figure 5.327: Reel Drive

Tightening Reel Drive Chain

DANGER

To avoid bodily injury or death from unexpected startup of machine, always stop the engine and remove the key before making adjustments to the machine.

1. Lower the header fully.
2. Adjust the reel to full forward position for easier access to the work area.
3. Shut down the engine, and remove the key from the ignition.
4. Remove the drive cover. For instructions, refer to *Removing Reel Drive Cover, page 601*.

5. Slide motor (A) and motor mount (B) upward until chain (C) is tight.
6. Ensure there is 3 mm (1/8 in.) of slack at the chain midspan. Adjust if necessary.

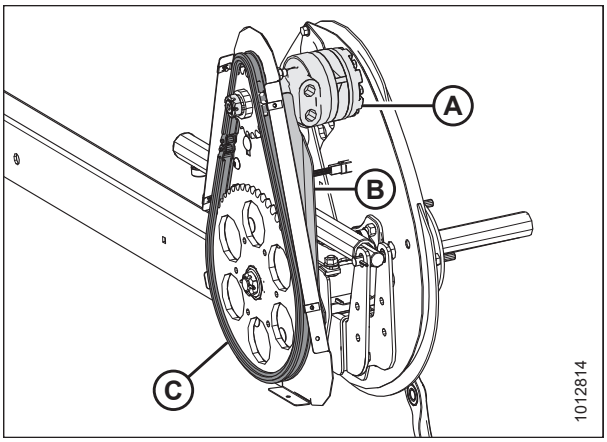

Figure 5.328: Single-Reel Drive – Double Reel Similar

7. Tighten six nuts (A). Torque to 73 Nm (54 lbf·ft).
8. Install the drive cover. For instructions, refer to *Installing Reel Drive Cover, page 602*.

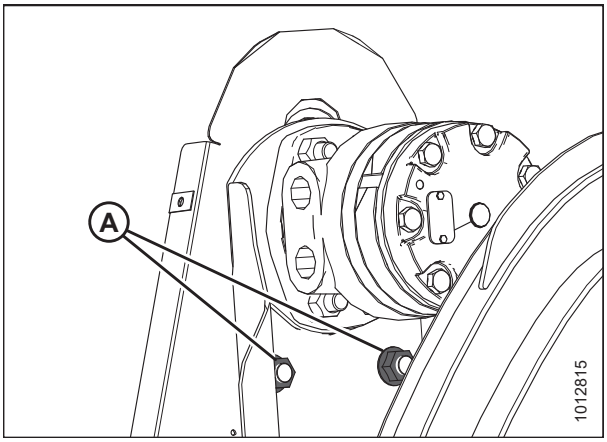

Figure 5.329: Single-Reel Drive – Double Reel Similar

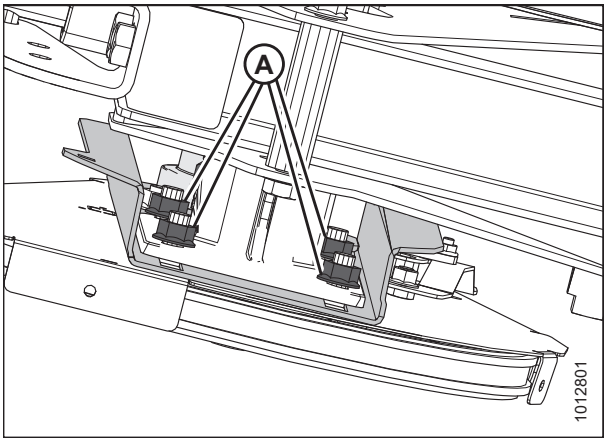

Figure 5.330: Single-Reel Drive – Viewed from Underside of Reel

5.14.3 Reel Drive Sprocket

The reel drive sprocket is attached to the motor.

For Case IH and New Holland combine models, configure the combine according to the reel sprocket size in order to optimize the auto reel to ground speed control. Refer to the combine service manual for more information.

Removing Reel Drive Sprocket

WARNING

To avoid injury or death from unexpected start-up of machine, always stop the engine and remove the key from the ignition before leaving the operator's seat for any reason.

1. Shut down the engine, and remove the key from the ignition.
2. Remove the reel drive cover. For instructions, refer to *Removing Reel Drive Cover, page 601*.
3. Loosen reel drive chain (A). For instructions, refer to *Loosening Reel Drive Chain, page 604*.
4. Remove reel drive chain (A) from reel drive sprocket (B).

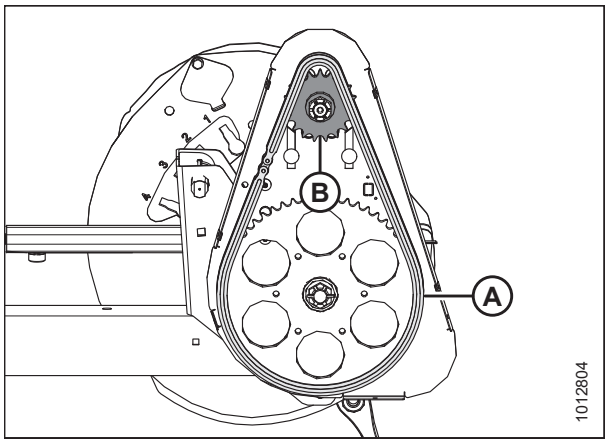

Figure 5.331: Reel Drive Sprocket

5. Remove cotter pin (A), slotted nut (B), and flat washer (C) from the motor shaft.
6. Remove reel drive sprocket (D). Ensure the key remains in the shaft.

   IMPORTANT:

   To avoid damaging the motor, use a puller if the drive sprocket (D) does not come off by hand. Do **NOT** use a pry bar and/or hammer to remove the drive sprocket.

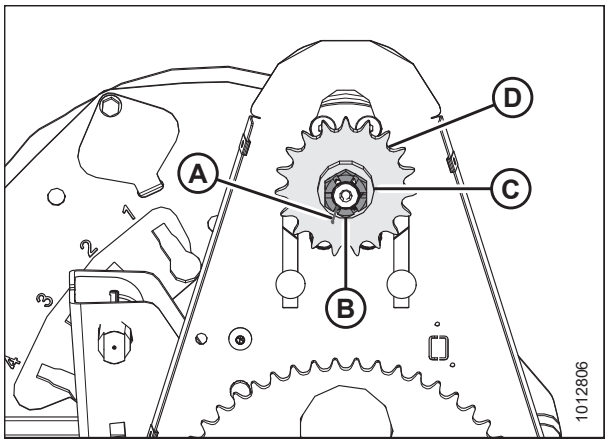

Figure 5.332: Reel Drive Sprocket

Installing Reel Drive Sprocket

WARNING

To avoid injury or death from unexpected start-up of machine, always stop the engine and remove the key from the ignition before leaving the operator's seat for any reason.

1. Align the keyway in sprocket (D) with the key on the motor shaft, and slide the sprocket onto the shaft. Secure with flat washer (C) and slotted nut (B).
2. Torque slotted nut (B) to 54 Nm (40 lbf·ft).
3. Install cotter pin (A). If necessary, tighten slotted nut (B) to the next slot to install the cotter pin.

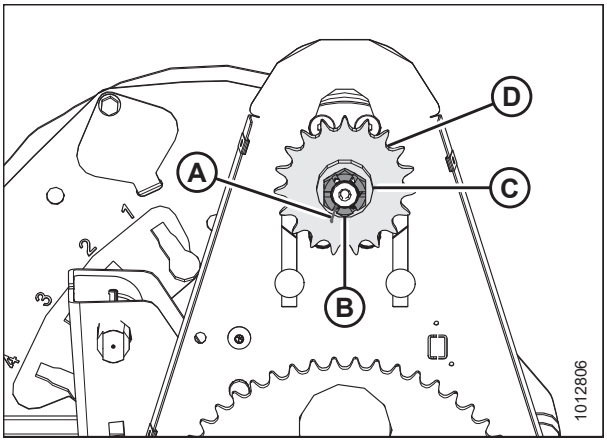

Figure 5.333: Reel Drive

4. Install drive chain (A) onto drive sprocket (B).
5. Tighten the drive chain. For instructions, refer to *Tightening Reel Drive Chain, page 604*.
6. Reinstall the reel drive cover. For instructions, refer to *Installing Reel Drive Cover, page 602*.

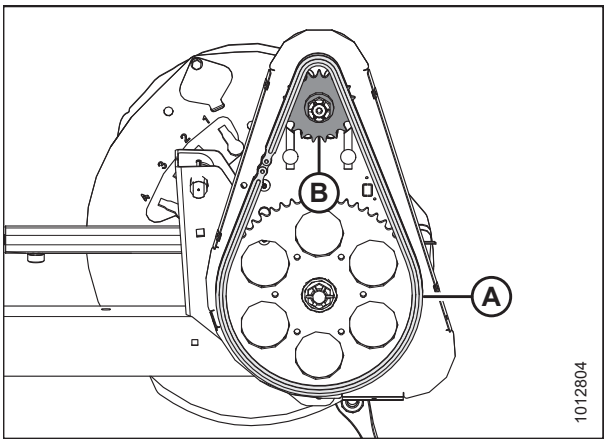

Figure 5.334: Reel Drive

5.14.4 Double-Reel Drive U-Joint

The double-reel drive U-joint allows each reel to move independently of the other.

Lubricate the U-joint according to the specifications. For instructions, refer to *5.3.6 Lubrication and Servicing, page 438*.

Replace the U-joint if severely worn or damaged. For instructions, refer to *Removing Double-Reel Drive U-Joint, page 608*.

Removing Double-Reel Drive U-Joint

WARNING

To avoid injury or death from unexpected start-up of machine, always stop the engine and remove the key from the ignition before leaving the operator's seat for any reason.

1. Shut down the engine, and remove the key from the ignition.
2. Remove the drive cover. For instructions, refer to *Removing Reel Drive Cover, page 601*.
3. Support the inboard end of the right reel with a front end loader and nylon slings (A) or equivalent lifting devices.

   IMPORTANT:

   To avoid damaging or denting the center tube, support the reel as close to the end disc as possible.

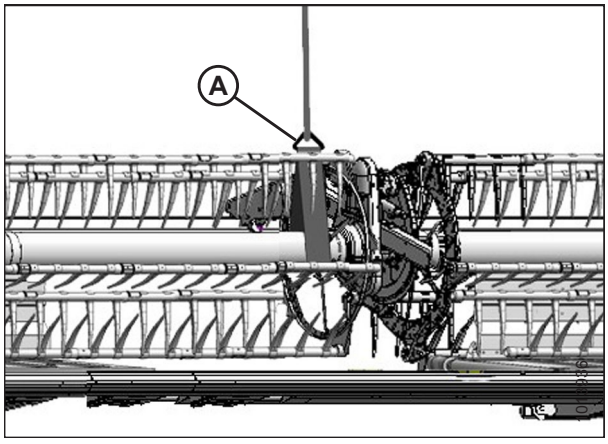

Figure 5.335: Supporting Reel

4. Remove six bolts (A) attaching U-joint flange (B) to driven sprocket (C).
5. Remove the U-joint.

   NOTE:

   It may be necessary to move the right reel sideways so that the U-joint can clear the tube.

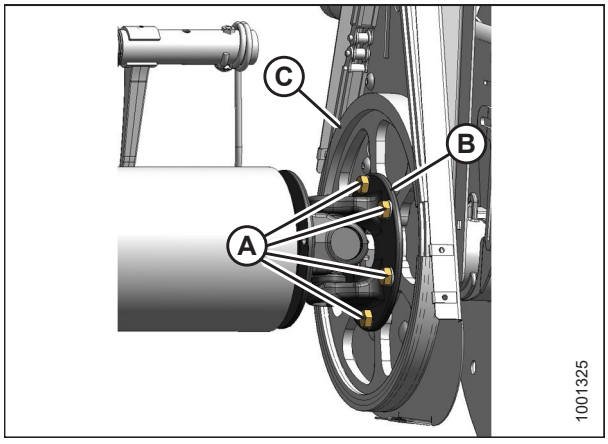

Figure 5.336: U-Joint

Installing Double-Reel U-Joint

1. Position U-joint flange (B) onto driven sprocket (C) as shown. Install six bolts (A) and hand-tighten. Do **NOT** torque the bolts.

   NOTE:

   Only four bolts (A) are shown in the illustration at right.

   NOTE:

   It may be necessary to move the right reel sideways so that the U-joint can clear the reel tube.

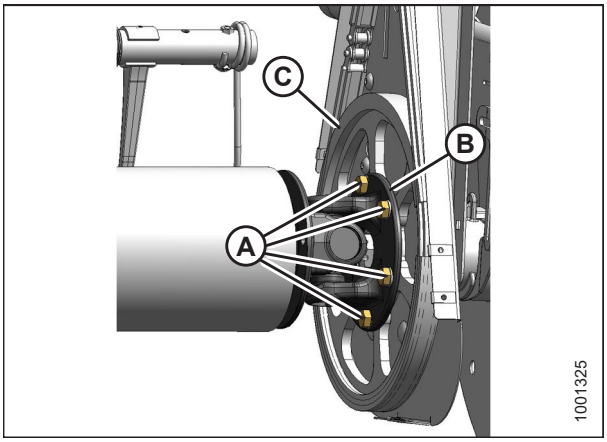

Figure 5.337: U-Joint

2. Position the right reel tube against the reel drive and engage the stub shaft into the U-joint pilot hole.
3. Rotate the reel until the holes in the end of the reel tube and U-joint flange (B) line up.
4. Apply medium-strength threadlocker (Loctite® 243 or equivalent) to four 1/2 in. bolts (A) and secure in flange with lock washers.
5. Torque to 102–115 Nm (75–85 lbf·ft).

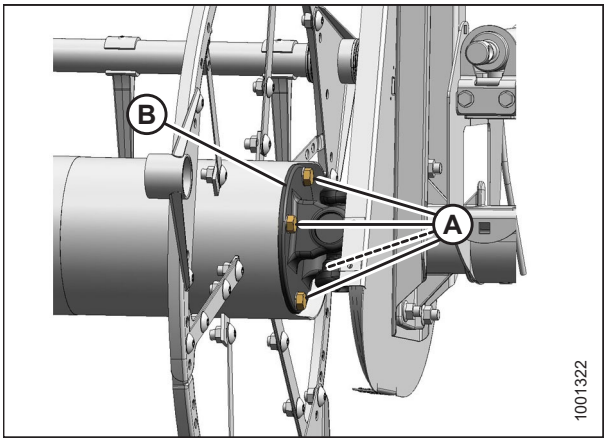

Figure 5.338: U-Joint

6. Remove sling (A) from the reel.
7. Install the drive cover. For instructions, refer to *Installing Reel Drive Cover, page 602*.

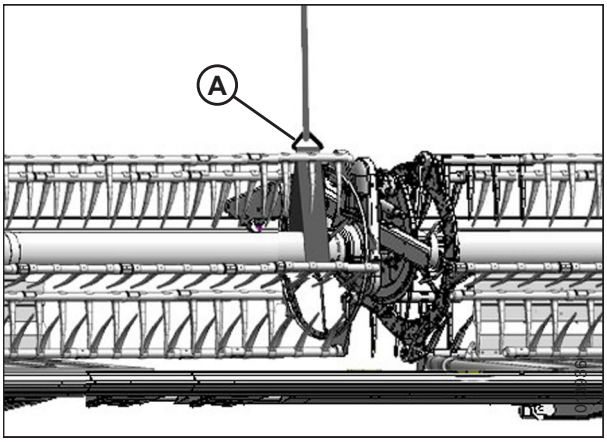

Figure 5.339: Supporting Reel

5.14.5 Reel Drive Motor

The reel drive motor is used on the reel drive system on single-reel and double-reel draper headers. This motor does not require regular maintenance or servicing. If problems occur with the motor, remove it and have it serviced by your MacDon Dealer.

Removing Reel Drive Motor

WARNING

To avoid injury or death from unexpected start-up of machine, always stop the engine and remove the key from the ignition before leaving the operator's seat for any reason.

1. Shut down the engine, and remove the key from the ignition.
2. Loosen the drive chain. For instructions, refer to *Loosening Reel Drive Chain, page 604*.
3. Remove the drive sprocket. For instructions, refer to *Removing Reel Drive Sprocket, page 606*.
4. Mark hydraulic lines (A) and their connections on motor (B) to ensure correct reinstallation.

   NOTE:

   Before disconnecting the hydraulic lines, clean the motor's ports and exterior surfaces.
5. Disconnect hydraulic lines (A) at motor (B). Cap or plug open ports and lines.
6. Remove four nuts and bolts (C), and remove motor (B). Retrieve the spacer (if installed) from between motor (B) and the motor mount.
7. If the motor is being replaced, remove the hydraulic fittings from the old motor and install them in the new motor using the same orientations.

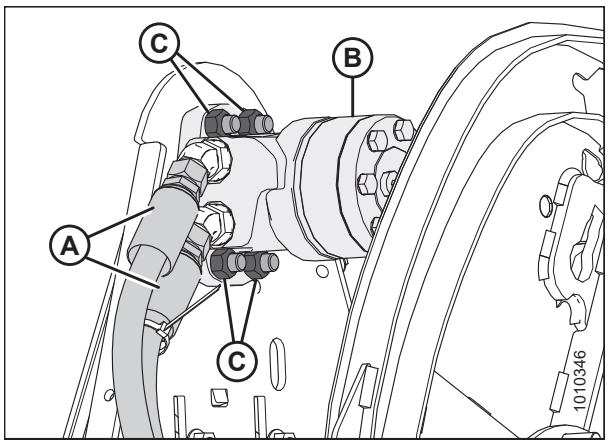

Figure 5.340: Reel Motor and Hoses

Installing Reel Drive Motor

1. Slide motor mount (A) up or down so the motor mounting holes (B) are accessible through the openings in the chain case.

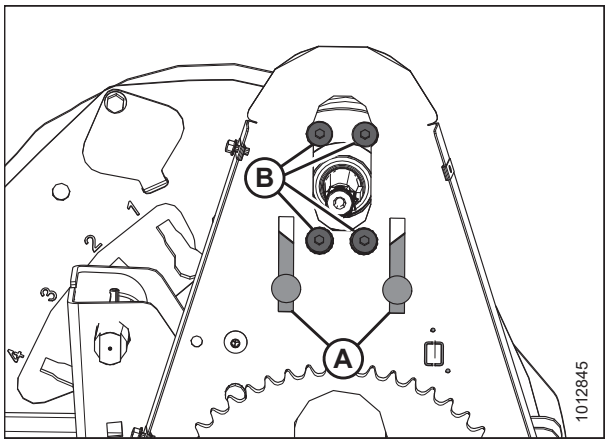

Figure 5.341: Reel Drive Motor Mounting Holes

2. Attach motor (A) (and spacer if previously removed) to motor mount (B) with four 1/2 x 1 3/4 in. countersunk bolts and nuts (C).
3. If installing a new motor, install the hydraulic fittings (not shown) from the original motor.

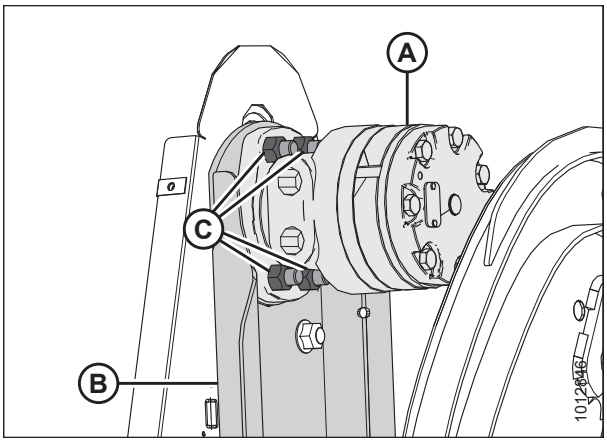

Figure 5.342: Reel Drive Motor

4. Remove the caps or plugs from the ports and lines and connect hydraulic lines (A) to hydraulic fittings (B) on motor (C).

   NOTE:

   Ensure hydraulic lines (A) are installed in their original locations.

5. Install the drive sprocket. For instructions, refer to *Installing Reel Drive Sprocket, page 607*.
6. Tighten the drive chain. For instructions, refer to *Tightening Reel Drive Chain, page 604*.

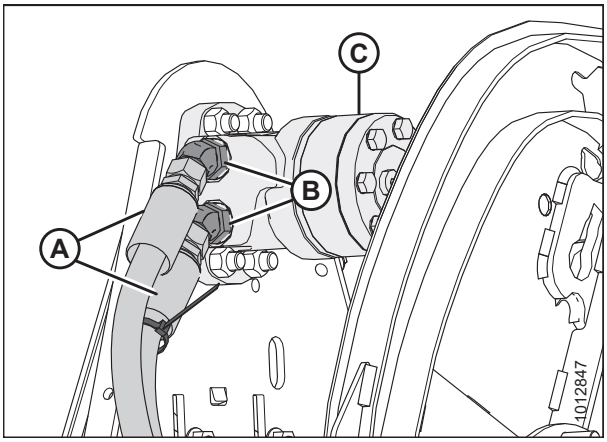

Figure 5.343: Reel Motor and Hoses

5.14.6 Replacing Drive Chain on Double Reel

DANGER

To avoid bodily injury or death from unexpected startup of machine, always stop the engine and remove the key before making adjustments to the machine.

1. Shut down the engine, and remove the key from the ignition.
2. Remove the reel drive cover. For instructions, refer to *Removing Reel Drive Cover, page 601*.
3. Loosen the drive chain. For instructions, refer to *Loosening Reel Drive Chain, page 604*.
4. Support the inboard end of the right reel with a front end loader and nylon slings (A) or equivalent lifting devices.

   IMPORTANT:

   Avoid damaging or denting the center tube by supporting the reel as close to the end of the reel as possible.

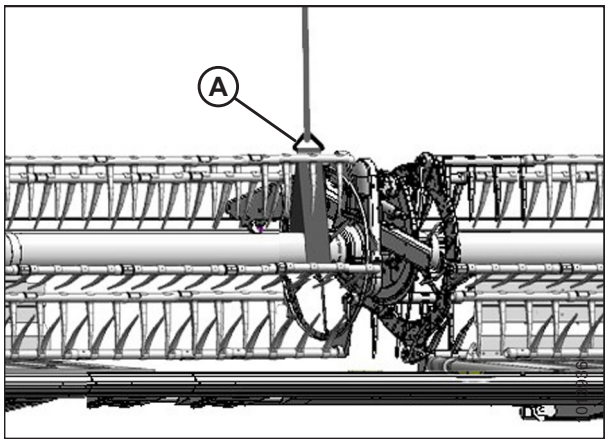

Figure 5.344: Supporting Reel

5. Remove four bolts (A) securing the reel tube to U-joint flange (B).

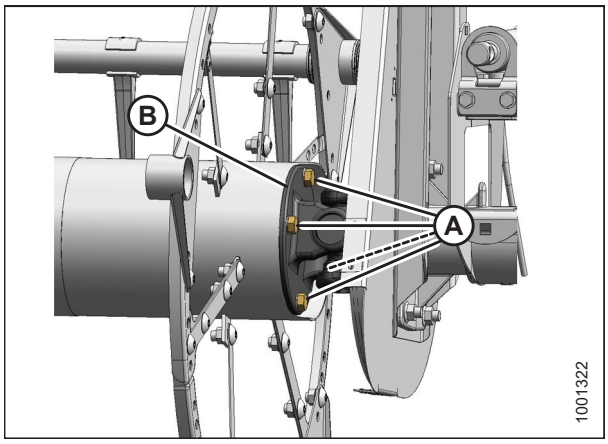

Figure 5.345: U-Joint

6. Move the right reel sideways to separate reel tube (A) from U-joint (B).
7. Remove drive chain (C).
8. Route chain (C) over U-joint (B) and position onto the sprockets.

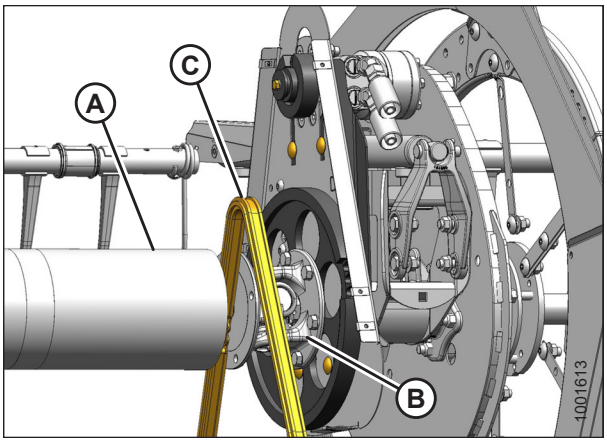

Figure 5.346: Replacing Chain

9. Position the right reel tube against the reel drive and engage the stub shaft into the U-joint pilot hole.
10. Rotate the reel until the holes in end of the reel tube and U-joint flange line up.
11. Apply medium-strength threadlocker (Loctite® 243 or equivalent) to four 1/2 in. bolts (A) and secure to the flange with lock washers.
12. Torque to 102–115 Nm (75–85 lbf·ft.).

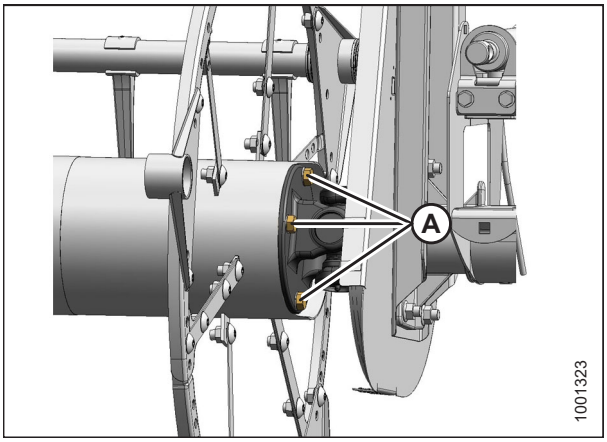

Figure 5.347: U-Joint

13. Remove temporary reel sling (A).
14. Tighten the drive chain. For instructions, refer to *Tightening Reel Drive Chain, page 604*.
15. Reinstall the reel drive cover. For instructions, refer to *Installing Reel Drive Cover, page 602*.

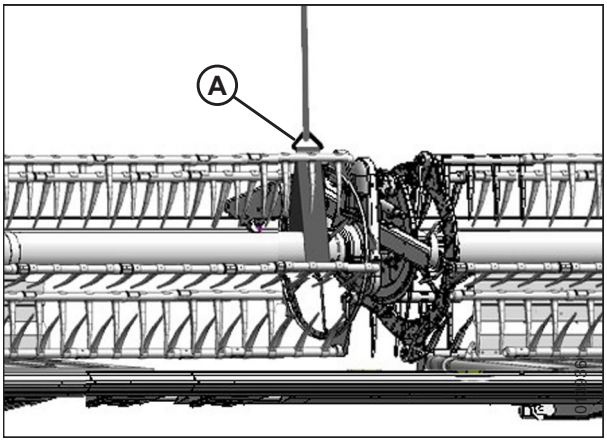

Figure 5.348: Supporting Reel

5.14.7 Replacing Single-Reel Header Drive Chain

WARNING

To avoid injury or death from unexpected start-up of machine, always stop the engine and remove the key from the ignition before leaving the operator's seat for any reason.

1. Shut down the engine, and remove the key from the ignition.
2. Remove the reel drive cover. For instructions, refer to *Removing Reel Drive Cover, page 601*.
3. Loosen the drive chain. For instructions, refer to *Loosening Reel Drive Chain, page 604*.
4. Lift chain (A) off drive sprocket (B).
5. Lower the chain until it is free from lower sprocket (C), and then remove the chain from the drive.
6. Position new chain (A) around the bottom teeth on lower sprocket (C).
7. Lift the chain onto drive sprocket (B), ensuring all the links are properly engaged in the teeth.
8. Tighten the drive chain. For instructions, refer to *Tightening Reel Drive Chain, page 604*.
9. Reinstall the reel drive cover. For instructions, refer to *Installing Reel Drive Cover, page 602*.

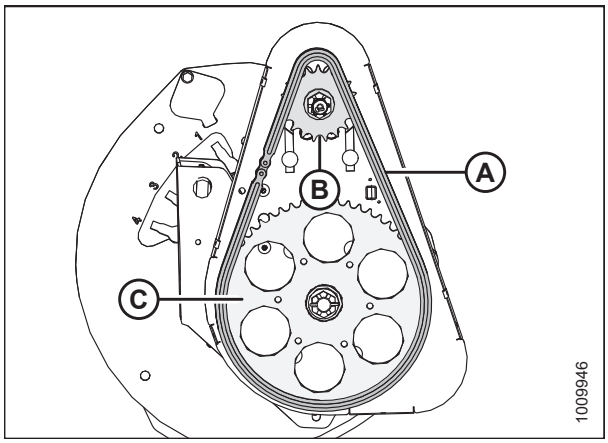

Figure 5.349: Reel Drive

5.14.8 Replacing Reel Speed Sensor

The reel speed sensors (and the procedures for replacing them) vary with the combine model.

Refer to the following topics depending on your combine model:

- *Replacing Challenger, Gleaner, and Massey Ferguson Reel Speed Sensor, page 615*
- *Replacing John Deere Reel Speed Sensor, page 617*
- *Replacing CLAAS 400 Series Reel Speed Sensor, page 617*
- *Replacing CLAAS 500/700 Series Reel Speed Sensor, page 618*

Replacing Challenger, Gleaner, and Massey Ferguson Reel Speed Sensor

WARNING

To avoid injury or death from unexpected start-up of machine, always stop the engine and remove the key from the ignition before leaving the operator's seat for any reason.

1. Shut down the engine, and remove the key from the ignition.
2. Remove the drive cover. For instructions, refer to *Removing Reel Drive Cover, page 601*.
3. Disconnect electrical connector (A).

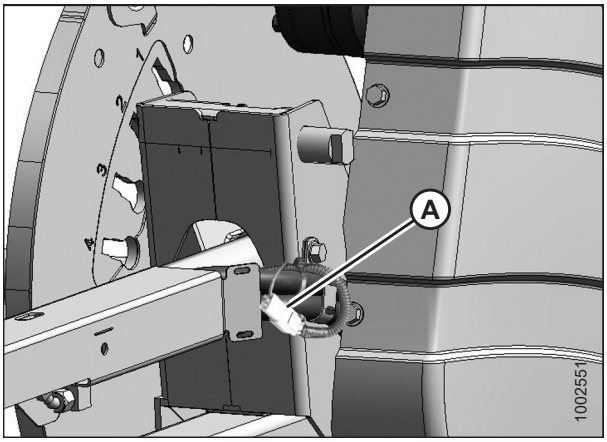

Figure 5.350: Electrical Harness

4. Cut cable tie (A) securing the harness to the cover.
5. Remove two screws (B), sensor (C), and the harness. If necessary, bend cover (D) to remove the harness.
6. Feed the wire of the new sensor behind cover (D) and through the chain case.
7. Locate the new sensor in support (E) and attach with two screws (B).
8. Adjust the gap between sensor disc (F) and sensor (C) to 0.5–1.5 mm (0.02–0.06 in.).

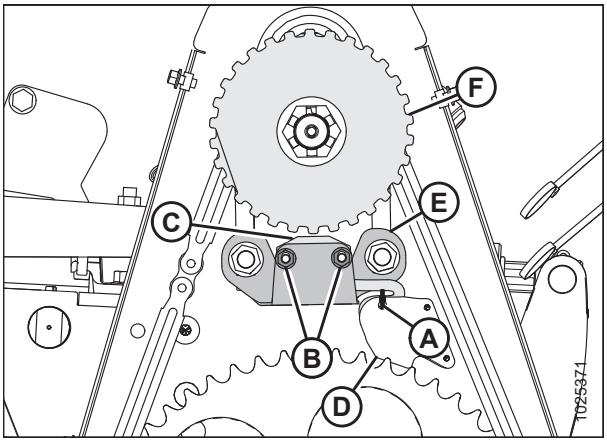

Figure 5.351: Speed Sensor

9. Connect sensor harness with header harness (A).

   IMPORTANT:

   Ensure the sensor electrical harness does **NOT** contact the chain or sprocket.

10. Reinstall the drive cover. For instructions, refer to *Installing Reel Drive Cover, page 602*.

11. Verify proper operation of the sensor.

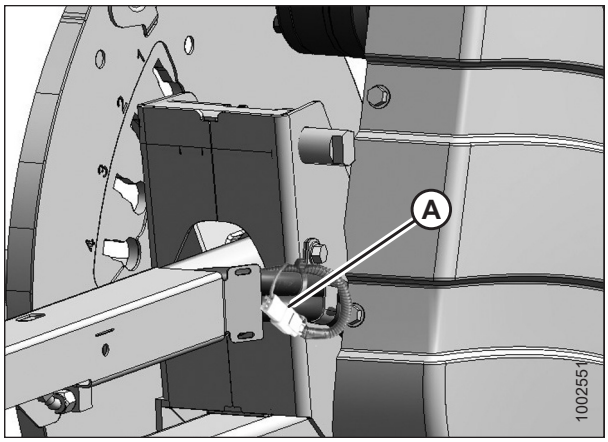

Figure 5.352: Electrical Harness

Replacing John Deere Reel Speed Sensor

WARNING

To avoid injury or death from unexpected start-up of machine, always stop the engine and remove the key from the ignition before leaving the operator's seat for any reason.

1. Shut down the engine, and remove the key from the ignition.
2. Remove the drive cover. For instructions, refer to *Removing Reel Drive Cover, page 601*.
3. Disconnect electrical connector (D).
4. Remove top nut (C) and remove sensor (B).
5. Remove the top nut from the new sensor and position the sensor into the support. Secure with top nut (C).
6. Adjust the gap between sensor disc (A) and sensor (B) to 3 mm (1/8 in.) using nut (C).
7. Connect to sensor connector at (D) and to sensor harness (E).

   IMPORTANT:

   Ensure the sensor electrical harness does **NOT** contact the chain or sprocket.
8. Reinstall the drive cover. For instructions, refer to *Installing Reel Drive Cover, page 602*.

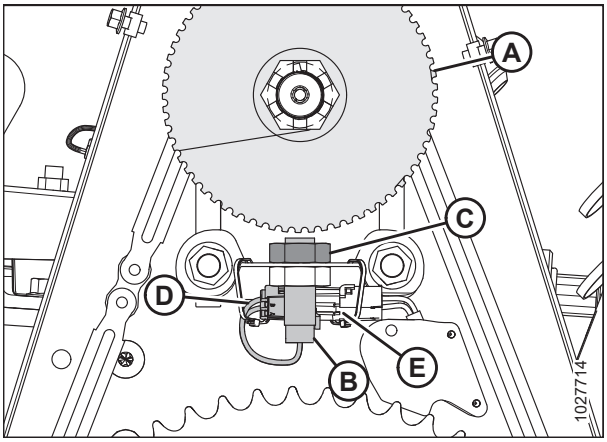

Figure 5.353: Speed Sensor

Replacing CLAAS 400 Series Reel Speed Sensor

WARNING

To avoid injury or death from unexpected start-up of machine, always stop the engine and remove the key from the ignition before leaving the operator's seat for any reason.

1. Shut down the engine, and remove the key from the ignition.
2. Remove the drive cover. For instructions, refer to *Removing Reel Drive Cover, page 601*.
3. Disconnect electrical connector located behind the chain case.
4. Remove and discard top nut (A) and sensor (B).
5. Remove the top nut from the new sensor, and position new sensor (B) into the support. Secure with top nut (A).
6. Adjust the gap between sensor disc (C) and sensor (B) to 3 mm (1/8 in.) using nuts (A) and (D).
7. Route harness through knockout hole (E) and connect to the harness behind the chain case.

   IMPORTANT:

   Ensure the sensor electrical harness does **NOT** contact the chain or sprocket.
8. Reinstall the drive cover. For instructions, refer to *Installing Reel Drive Cover, page 602*.

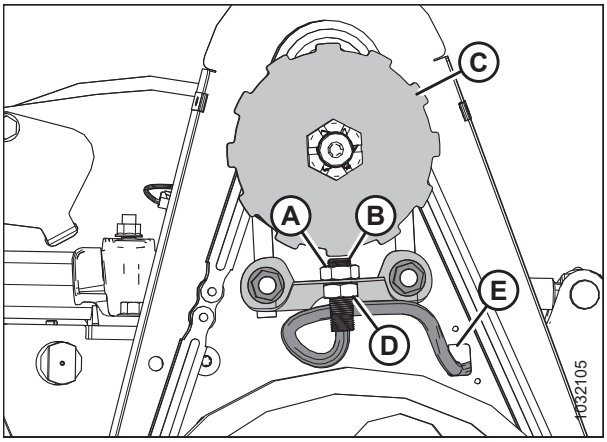

Figure 5.354: Speed Sensor

Replacing CLAAS 500/700 Series Reel Speed Sensor

WARNING

To avoid injury or death from unexpected start-up of machine, always stop the engine and remove the key from the ignition before leaving the operator's seat for any reason.

1. Shut down the engine, and remove the key from the ignition.
2. Remove the drive cover. For instructions, refer to *Removing Reel Drive Cover, page 601*.
3. Disconnect the electrical connector located behind the chain case from sensor (A).
4. Remove cable ties (B).
5. Remove shield (C) and rivets (D).
6. Remove nut (E) and remove sensor (A).
7. Position new sensor (A) into support (F). Secure with nut (E).
8. Adjust speed sensor to achieve a gap of 1–3 mm (1/16–1/8 in.) from sensor disc (G).
9. Route harness through knockout hole in panel and connect to sensor (A). Secure harness in place with shield (C) and rivets (D).
10. Secure harness to sensor support with cable ties (B) as shown.

    IMPORTANT:

    Ensure the sensor electrical harness does **NOT** contact the chain or sprocket.

11. Reinstall the drive cover. For instructions, refer to *Installing Reel Drive Cover, page 602*.

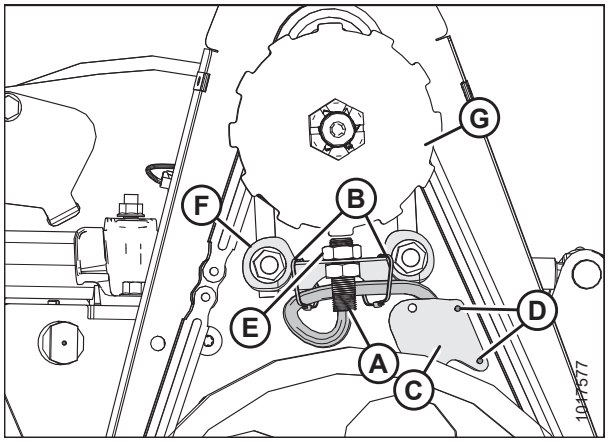

Figure 5.355: Speed Sensor

5.15 Transport System (Optional)

Refer to *6.4.4 Stabilizer Wheels and Slow Speed Transport Package, page 633* for more information.

5.15.1 Checking Wheel Bolt Torque

If a transport system is installed, follow these steps to torque the wheel bolts:

DANGER

To avoid bodily injury or death from unexpected startup of machine, always stop the engine and remove the key before making adjustments to the machine.

1. Turn off the engine and remove the key.
2. Follow the bolt tightening sequence shown, and torque the wheel bolts to 110–120 Nm (80–90 lbf·ft).

   IMPORTANT:

   Whenever a wheel is removed and reinstalled, check the wheel bolt torque after one hour of operation and every 100 hours thereafter.

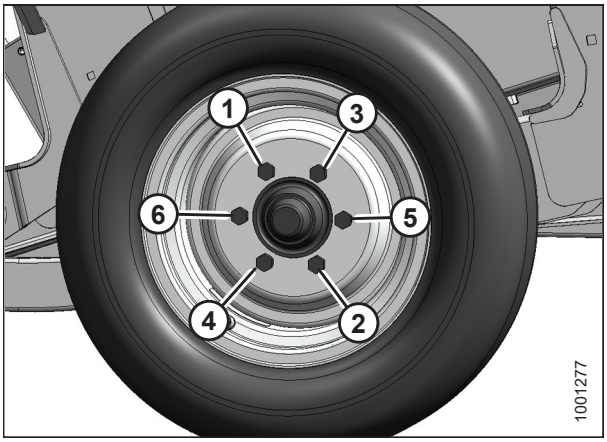

Figure 5.356: Bolt Tightening Sequence

5.15.2 Checking Axle Bolt Torque

If a transport system is installed, do the following steps to torque the axle bolts:

DANGER

To avoid bodily injury or death from unexpected startup of machine, always stop the engine and remove the key before making adjustments to the machine.

Figure 5.357: Axle Bolts

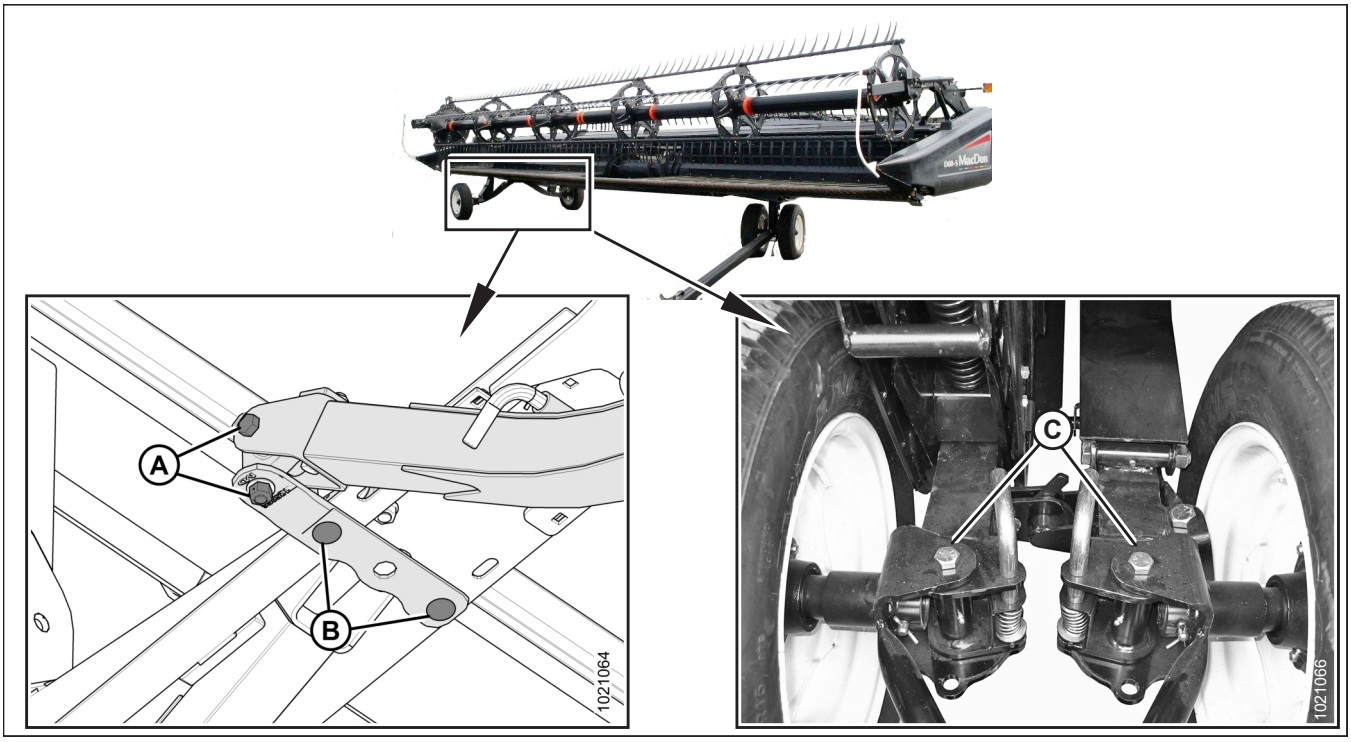

1. Check and tighten axle bolts **DAILY** until torque is maintained as follows:
   - (A): 244 Nm (180 lbf·ft)
   - (B): 203 Nm (150 lbf·ft)
   - (C): 244 Nm (180 lbf·ft)

5.15.3 Checking Tire Pressure

Check the tire inflation pressure and inflate according to the information provided in Table *5.4, page 621*.

WARNING

- **Service tires safely.**
- **A tire can explode during inflation, which could cause serious injury or death.**
- **Do NOT stand over tire. Use a clip-on chuck and extension hose.**
- **Do NOT exceed maximum inflation pressure indicated on tire label or sidewall.**
- **Replace tires that have defects.**
- **Replace wheel rims that are cracked, worn, or severely rusted.**
- **Never weld a wheel rim.**
- **Never use force on an inflated or partially inflated tire.**
- **Make sure the tire is correctly seated before inflating to operating pressure.**
- **If the tire is not correctly positioned on the rim or is overinflated, the tire bead can loosen on one side causing air to escape at high speed and with great force. An air leak of this nature can thrust the tire in any direction endangering anyone in the area.**
- **Make sure all the air is removed from the tire before removing the tire from the rim.**
- **Do NOT remove, install, or repair a tire on a rim unless you have the proper equipment and experience to perform the job.**
- **Take the tire and rim to a qualified tire repair shop.**

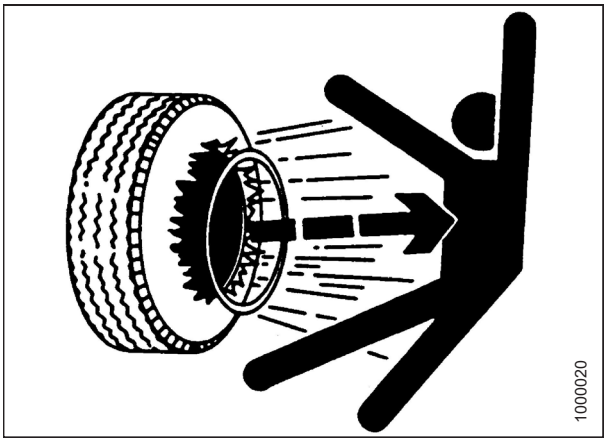

Figure 5.358: Inflation Warning

Table 5.4 Tire Pressure

Size	Load Range	Pressure
ST205/75 R15	D	517 kPa (75 psi)
ST205/75 R15	E	552 kPa (80 psi)

Chapter 6: Options and Attachments

The following options and attachments are available for use with your header. See your MacDon Dealer for availability and ordering information.

6.1 FM100 Float Module

6.1.1 Hillside Extension Kit

The Hillside Extension kit allows overfilling the hydraulic reservoir on FM100 Float Modules. This allows operation on steep hillsides while maintaining oil supply to the suction side of pump.

Installation instructions are included in the kit.

MD #B6057

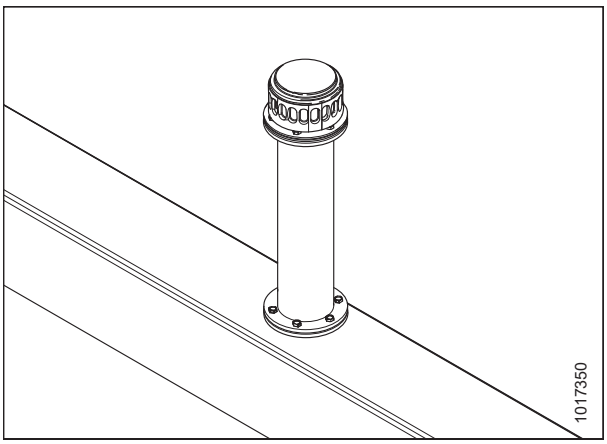

Figure 6.1: Hillside Extension Kit

6.2 Reel

6.2.1 Multi-Crop Rapid Reel Conversion Kit

For use on double-reel headers only, the Multi-Crop Rapid Reel Conversion kit decreases the time required to change the fore-aft cylinder position on the reel support arm from the normal operating location to a farther aft location that minimizes crop disturbance. The kit also allows the reel fore-aft cylinders to be quickly moved to the normal operating location.

MD #B6590

NOTE:

The Multi-Crop Rapid Reed Conversion kit is not available for European-configured D1 Series headers.

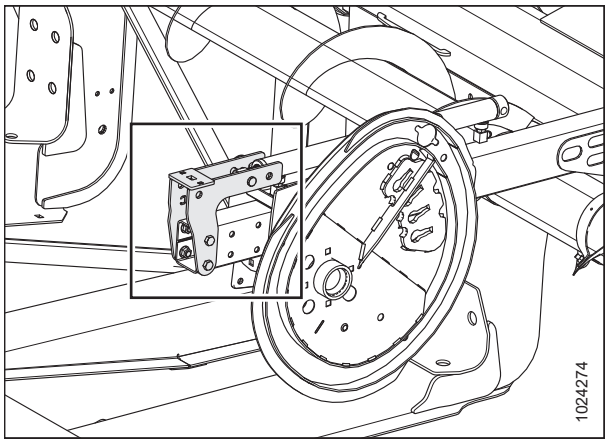

Figure 6.2: Center Arm – Left and Right Similar

6.2.2 Reel Arm Extension Kit – European-Configured Headers Only

This kit provides extensions for the outer reel support arms on an European-configured D1 Series header. These extensions provide the additional reel arm length required to properly install a Vertical Knife Mount kit (MD #B6137, MD #B6138) onto the header. The Reel Arm Extension kit also includes reel fore-aft brackets allowing quick reel repositioning from the reel's most forward position to its most rearward position.

NOTE:

Parts removed from illustration for clarity.

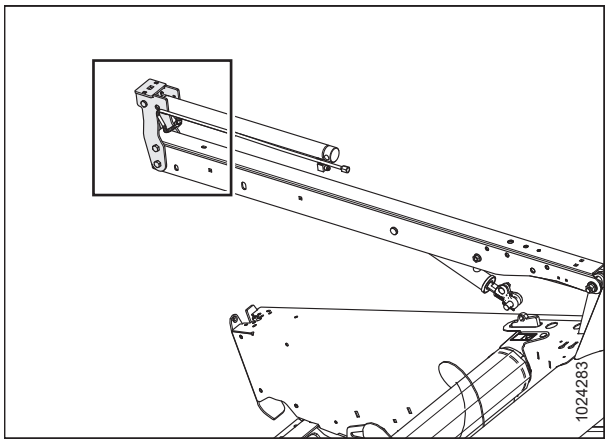

Figure 6.3: Right Arm – Center and Left Arms Similar

6.2.3 Reel Arm Extension Kit – North American-Configured Headers Only

This kit provides extensions for the outer reel support arms on a North American-configured D1 Series header. These extensions provide the additional reel arm length required to properly install a Vertical Knife Mount kit (MD #B6608, MD #B6609) onto the header. The Reel Arm Extension kit also includes reel fore-aft brackets allowing quick reel repositioning from the reel's most forward position to its most rearward position.

NOTE:

Parts removed from illustration for clarity.

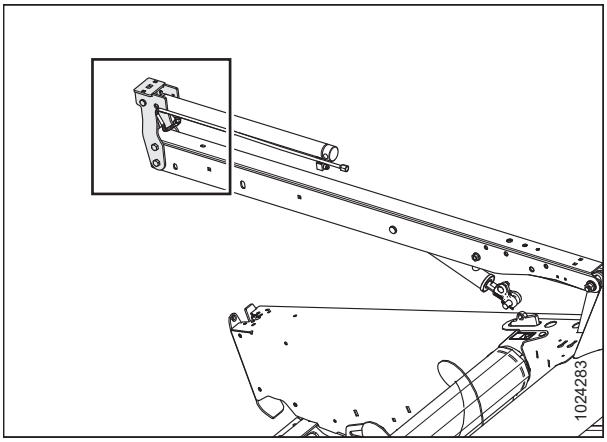

Figure 6.4: Right Arm – Center and Left Arms Similar

6.2.4 Lodged Crop Reel Finger Kit

Steel fingers (A) provided in the Lodged Crop Reel Finger kit attach to the ends of every other tine bar and help to clear material in heavy, hard-to-cut crops such as lodged rice.

Each kit contains three fingers for the cam end of the reel and three fingers for the tail end. Hardware and installation instructions are included in the kit.

MD #B4831

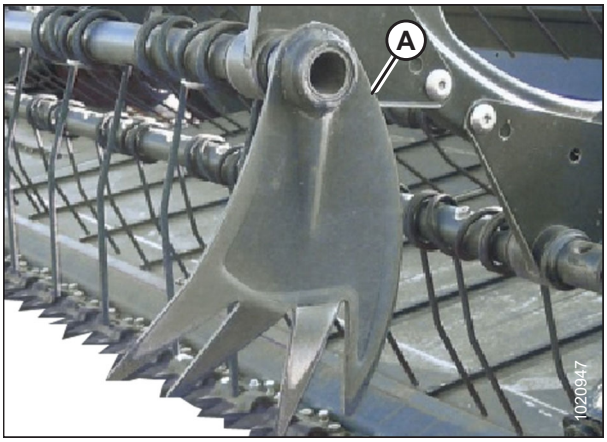

Figure 6.5: Lodged Crop Fingers

6.2.5 PR15 Tine Tube Reel Conversion Kit

These kits allow conversion from a six-bat reel to a nine-bat reel.

Steel fingers:

- D115 – MD #B6514
- D120 – MD #B6515
- D125 – MD #B5656
- D130 – MD #B5657[53]

Plastic fingers:

- D115 – MD #B6516
- D120 – MD #B6517
- D125 – MD #B5937
- D130 – MD #B6029[54]

NOTE:

All six-bat to nine-bat reel conversion kits include reel endshields.

6.2.6 Reel Endshield Kit

The steel shields provided in the reel endshield kit attach to the ends of the reels and help to clear material in heavy, hard-to-cut crops. They are standard equipment on all headers (except those with nine-bat reels). Hardware and installation instructions are included in the kit.

See your MacDon Dealer for more information.

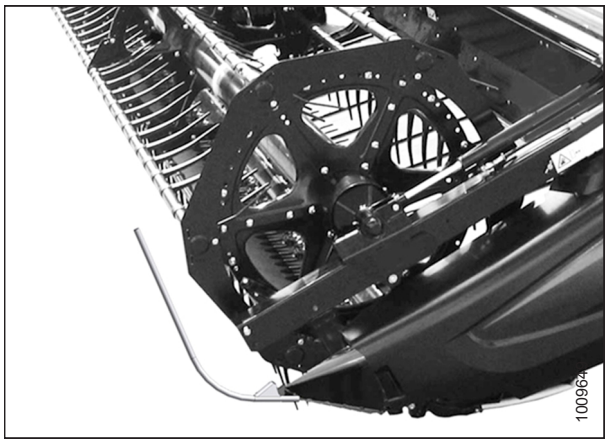

Figure 6.6: Reel Endshields

53. Double-reel units only.
54. Double-reel units only.

6.2.7 Tine Tube Reinforcing Kit

Tine tube reinforcing kits are available for five- and six-bat reels. They are designed to support high reel loads when cutting extremely heavy crops. Installation instructions are provided in the kit.

- Five-Bat Reels – MD #B5825
- Six-Bat Reels – MD #B5826

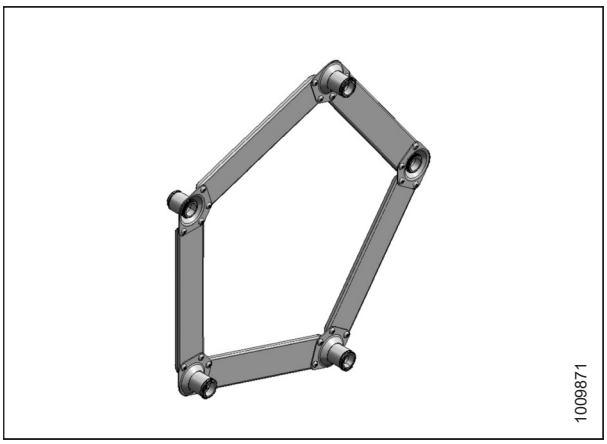

Figure 6.7: Five-Bat Reinforcing Kit Shown – Six-Bat Reinforcing Kit Similar

6.3 Cutterbar

6.3.1 Cutterbar Wearplate

Cutterbar wearplates are recommended for cutting on the ground when the soil is adhering to the steel.

Order one of the following bundles based on header size:

- D115 – MD #B4864
- D120 – MD #B4865
- D125 – MD #B4838
- D130 – MD #B4839
- D135 – MD #B4840
- D140 – MD #B4841
- D145 – MD #B5114



Figure 6.8: Cutterbar Wearplates

6.3.2 Knife Cutout Cover

Knife cutout covers attach to the endsheets and prevent cut crop, particularly severely lodged crop, from passing through the knifehead opening and accumulating in the knife drive box and endsheet.

Order the following kits according to your header size:

- D120–D125 – MD #220102 (stub guards)
- D130–D140 – MD #220103 (stub guards)

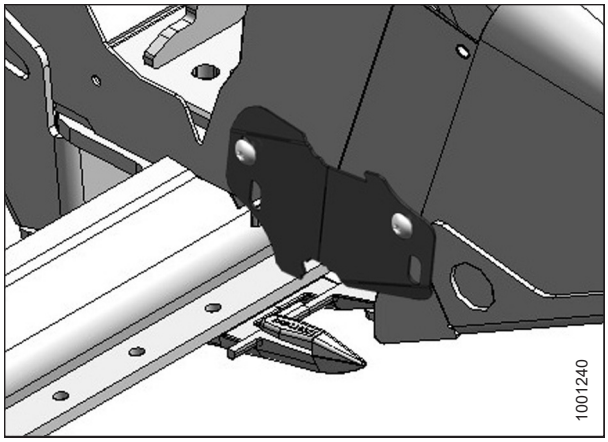

Figure 6.9: Knife Cutout Cover

6.3.3 Extended Center Filler

The Extended Center Filler kit (MD #B6450) includes a reinforced flap (3 mm [1/8 in.] thick) which extends onto the feed draper of a MacDon FM100 Float Module to help reduce loss when cutting crops such as beans and peas. Installation instructions are included with the kit.

MD #B6450

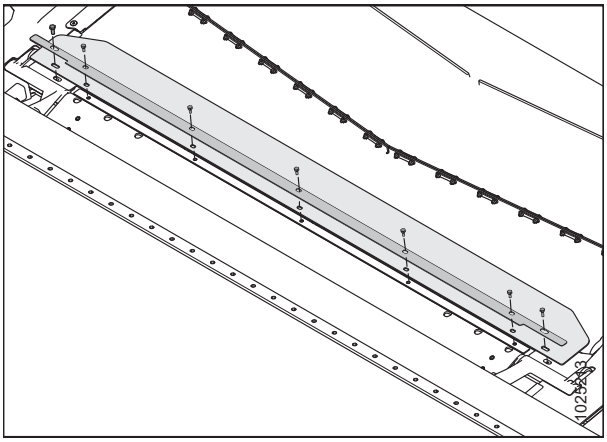

Figure 6.10: Extended Filler

6.3.4 Rock Retarder

Rock retarder (A) consists of a steel angle that is bolted to the cutterbar immediately aft of the knife, and helps prevent rocks and large debris from being swept onto the drapers with the crop. Installation instructions are included with the kit.

Order bundles by header size:

- 9.1–10.7 m (30–35 ft.) – MD #B5084
- 12.2–13.7 m (40–45 ft.) – MD #B5085

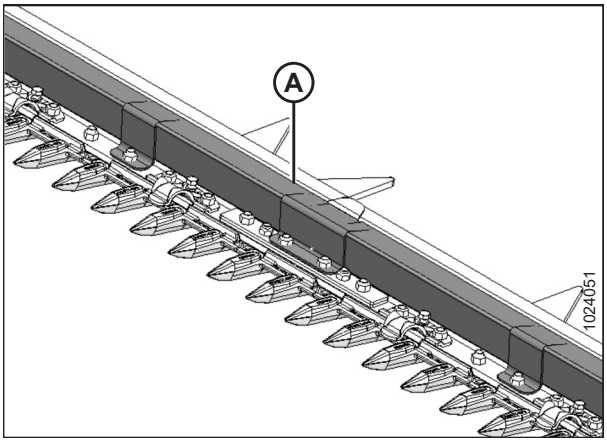

Figure 6.11: Rock Retarder

6.3.5 Stub Guard Conversion Kit

Stub guards, complete with top guides and adjuster shoes, are designed to cut tough crops.

Installation and adjustment instructions are included in the kits.

Order one of the following bundles according to your header size:

- 4.6 m (15 ft.) – MD #B5009
- 6.1 m (20 ft.) – MD #B5010
- 7.6 m (25 ft.) – MD #B5011
- 9.1 m (30 ft.) – MD #B5012
- 10.7 m (35 ft.) – MD #B5013

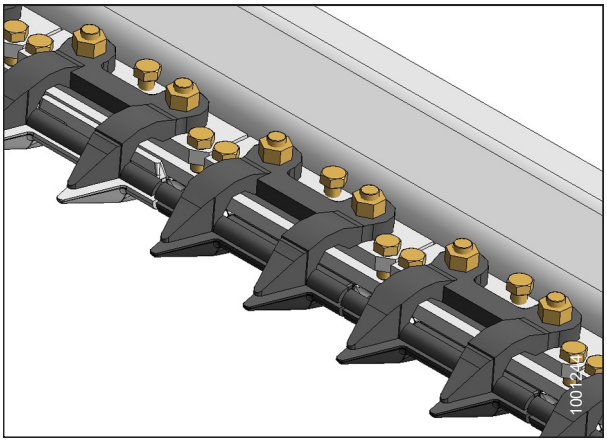

Figure 6.12: Stub Guards

6.3.6 Vertical Knife Mount Kits

Vertical Knife Mount kits allow a Ziegler vertical knife to be mounted onto D1 Draper headers.

Installation and adjustment instructions are included in the bundles.

Order the following Vertical Knife Mount kits depending on header configuration:

For non-European-configured D1 Series headers:

- Left Vertical Knife Mount – MD #B6608
- Right Vertical Knife Mount – MD #B6609

For European-configured D1 Series headers:

- Left Vertical Knife Mount – MD #B6137
- Right Vertical Knife Mount – MD #B6138

NOTE:

MD #B6137 and MD #B6138 can only be used on European-configured headers with short outer reel support arms.

NOTE:

Left Vertical Knife Mount kits (MD #B6608, MD #B6137) cannot be installed onto the header by itself and must be installed with the right Vertical Knife Mount kits (MD #B6609, MD #B6138).

NOTE:

Right Vertical Knife Mount kits (MD #B6609, MD #B6138) can be installed onto the header either by itself or with the Left Vertical Knife Mount kits (MD #6608, MD #6137).

NOTE:

Ziegler vertical knives are not included in the kits and must be ordered separately[55].

55. Order Ziegler part number 70-080613 for a right vertical knife and/or Ziegler part number 70-080614 for a left vertical knife.

6.3.7 Vertical Knife Plumbing Kits

Order one of the following bundles according to your header type:

Single Reel

- Double Vertical Knife Hose, D115 single reel – MD #B6263
- Double Vertical Knife Hose, D120 single reel – MD #B6264
- Double Vertical Knife Hose, D125 single reel – MD #B6265
- Double Vertical Knife Hose, D130 single reel – MD #B6266
- Double Vertical Knife Hose, D135 single reel – MD #B6267

Double Reel

- Double Vertical Knife Hose, D130 double reel – MD #B6255
- Double Vertical Knife Hose, D135 double reel – MD #B6256
- Double Vertical Knife Hose, D140 double reel – MD #B6257
- Double Vertical Knife Hose, D145 double reel – MD #B6258

6.4 Header

6.4.1 Divider Quick Latch Kit

Divider Quick Latch kits attach to the endsheets. They allow for quick removal and storage of endsheet divider cones and, if required, reduce the transport width of the header. Installation instructions are included in the kit.

MD #B6158

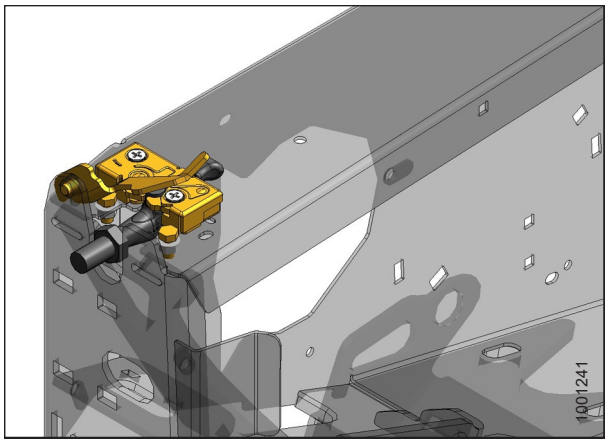

Figure 6.13: Divider Latch

6.4.2 Stabilizer Wheels

Stabilizer wheels help stabilize the header in field conditions that would otherwise cause the header to bounce, resulting in uneven cutting heights. Installation and adjustment instructions are included in the kit.

Available as an attachment for use with D130, D135, D140, and D145 headers.

MD #C1986

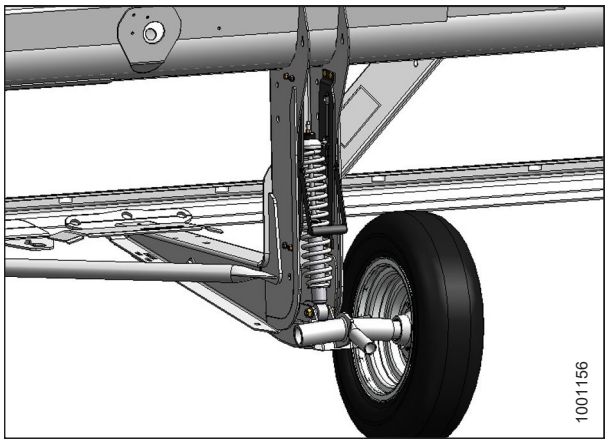

Figure 6.14: Stabilizer Wheel

6.4.3 Secondary Stabilizer Wheel

The secondary stabilizer wheel is added to existing stabilizer wheels to help stabilize the header in field conditions that would otherwise cause the header to bounce and result in uneven cutting height. Installation and adjustment instructions are included with the kit.

Available as an attachment for use with D130, D135, D140, and D145 headers.

MD #B6179[56]

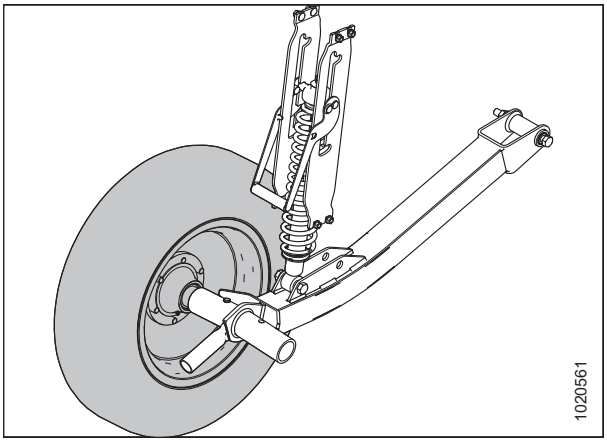

Figure 6.15: Secondary Stabilizer Wheel

6.4.4 Stabilizer Wheels and Slow Speed Transport Package

The Stabilizer Wheels and Slow Speed Transport Package help to stabilize the header in field conditions that would otherwise cause the header to bounce, resulting in uneven cutting heights. This system is similar to the Stabilizer Wheel (MD #C1986) option. For instructions, refer to *6.4.2 Stabilizer Wheels, page 632*.

The Stabilizer Wheels and Slow Speed Transport Package are also used to convert the header into transport mode for slow-speed towing behind a properly-configured combine (or agricultural tractor). A tow pole and installation instructions are included in the kit.

Non-European configured header: MD #C2007

European configured header: MD #C2008

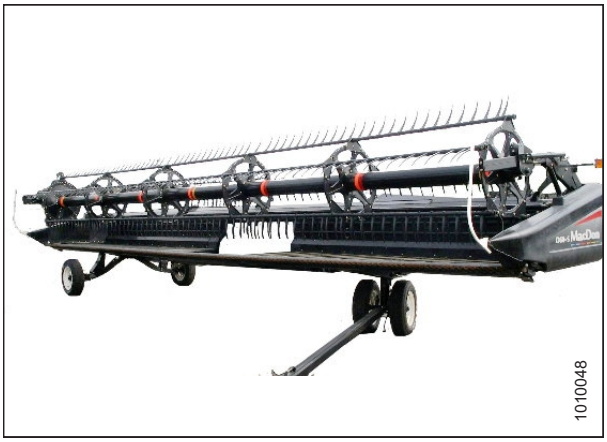

Figure 6.16: Stabilizer Wheels and Slow Speed Transport

6.4.5 Stubble Light Kit

Stubble lights are used in low light conditions and allow the operator to see the stubble cut behind the header. The Stubble Light Mounting kit is available for MacDon D130, D135, D140, and D145 headers. This kit is currently compatible with John Deere combines only.

MD #B6634

56. Kit consists of one wheel assembly; two kits are required to upgrade both sides of the header.

6.4.6 Backsheet Extension Kit

Backsheet Extension kit (A) helps retain small seeds in shatter prone crops such as canola. They are usually used with headers equipped with upper cross augers (UCA).

Order the following bundles according to your D1 Series Header size:

- D130 – MD #B6359
- D135 – MD #C2042
- D140 – MD #C2043
- D145 – MD #C2044

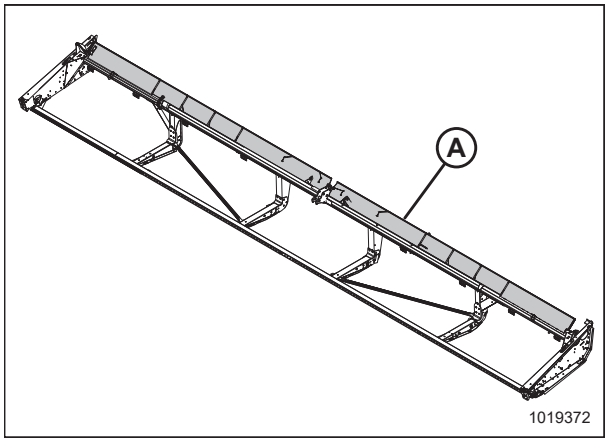

Figure 6.17: D1 Series Backsheet Extensions

6.4.7 Skid Shoe Kits

Skid Shoe kits provide improved performance when cutting low to the ground.

Installation instructions are included in the kits.

- MD #B5615 – Inboard Skid Shoes
- MD #B4963 – Outboard Skid Shoes

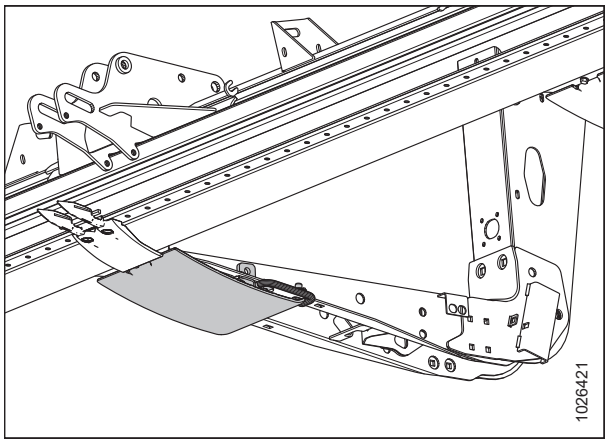

Figure 6.18: Center Skid Shoe – Inboard Shown, Outboard Similar

6.4.8 Steel Skid Shoes

IMPORTANT:

Not recommended for wet mud or conditions prone to sparking.

Steel skid shoes offer extra abrasion resistance.

Installation instructions are included with kit.

MD #B6583

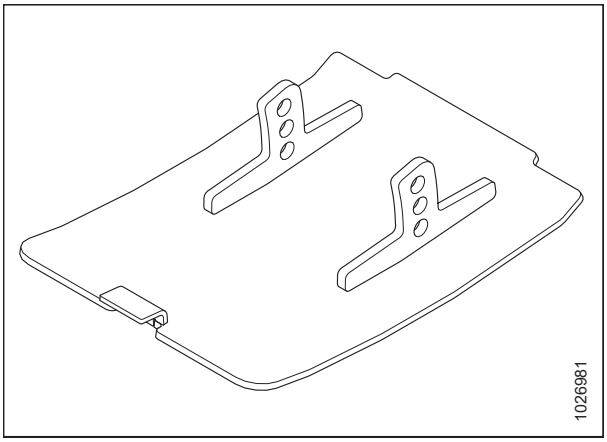

Figure 6.19: Steel Skid Shoe

6.5 Crop Delivery

6.5.1 FM100 Dual Auto Header Height Control Sensor Kit

This kit adds two sensors to the float linkage, adding automatic lateral tilt compensation for the header. When installed, the combine will automatically tilt the feeder house from side to side to follow uneven terrain during operation.

NOTE:

Not recommended for extremely hilly conditions.

Installation instructions are included in the kit.

MD #B6211

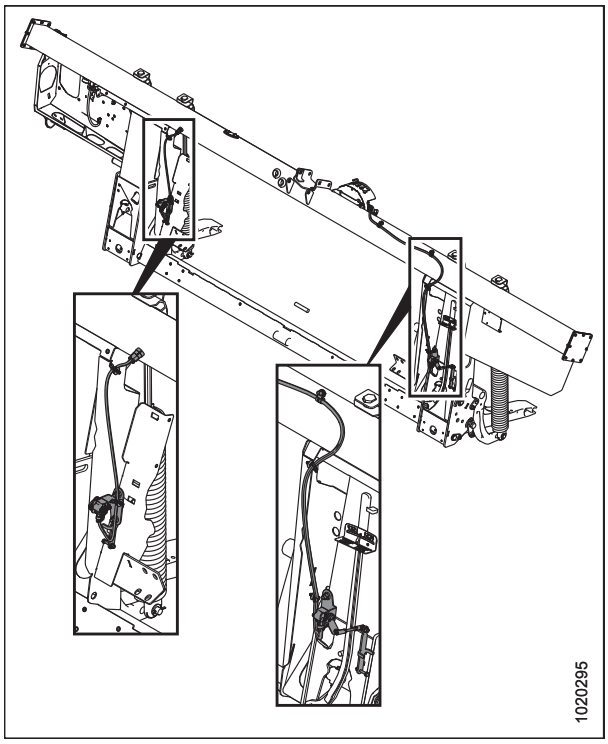

Figure 6.20: Dual AHHC Sensors

6.5.2 FM100 Feed Auger Flighting

Auger flighting (A) on the FM100 can be configured to specific combines and crop conditions. Refer to *3.8.1 FM100 Feed Auger Configurations, page 62* for combine/crop specific configurations.

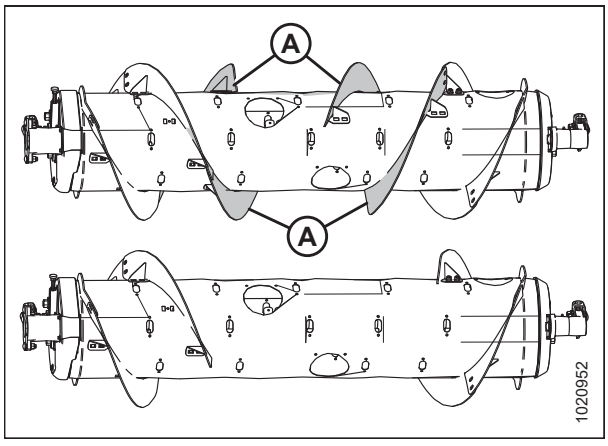

Figure 6.21: FM100 Feed Auger Flighting

6.5.3 In-Cab Draper Speed Control Kit

Installing this kit allows Operators to adjust the side draper's speed from the combine's cab.

NOTE:

The John Deere cab draper control is shown in the illustration below. The Case New Holland and generic cab draper control look and operate similarly to it.

Installation instructions are included in the kit.

- MD #B6701 – Cab Draper Control, John Deere
- MD #B6702 – Cab Draper Control, Case New Holland
- MD #B6703 – Cab Draper Control, Generic

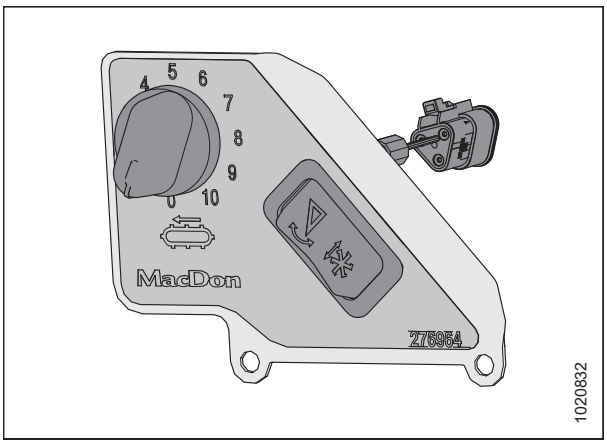

Figure 6.22: In-Cab Draper Speed Control Panel

6.5.4 Wide Draper Deflector

Wide metal draper deflectors attach to the inboard side of the endsheets to prevent material from falling through the gap between the endsheet and the draper.

Kit includes extra parts for various cutterbar layouts.

Installation instructions are included with the kit.

IMPORTANT:

The wide draper deflector is **NOT** compatible with the Lodged Crop Reel Finger (MD #B4831) option.

MD #B6551

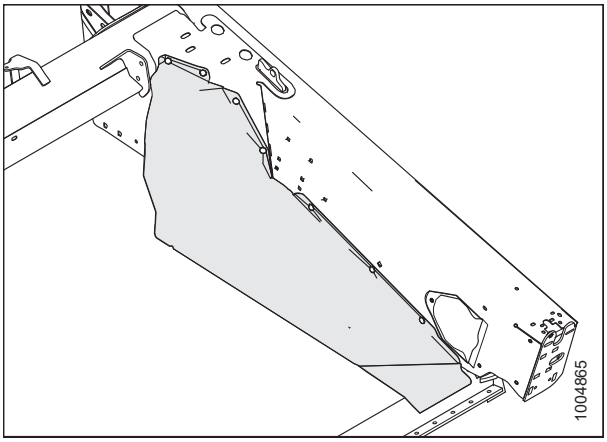

Figure 6.23: Wide Draper Deflector

6.5.5 Draper Clips

Draper clips offer additional wear protection for the draper cleats. They may prove useful in situations where conditions are dry or consistently hot.

Installation instructions are included with the kit.

- MD #294859 for square cleats (for drapers MD #172195, MD #172196, MD #172197, MD #172198)
- MD #294858 for tapered cleats (for drapers MD #220635, MD #220636, MD #220637, MD #220638, MD #220639, MD #220640)

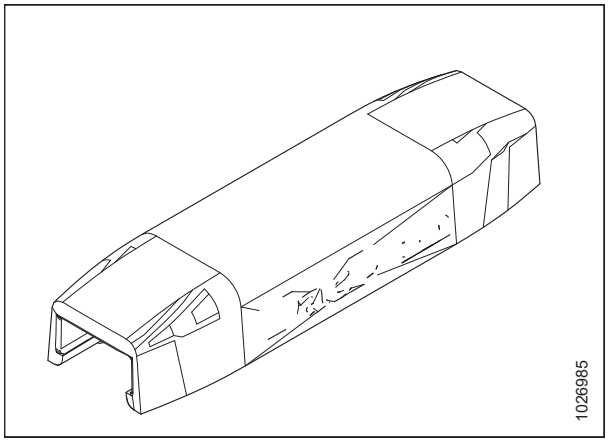

Figure 6.24: Draper Clip

6.5.6 Stripper Bars

Stripper bars improve feeding in certain crops such as rice. They are **NOT** recommended in cereal crops.

Instructions are included with the kit.

Select the stripper bar kit based on combine feeder house width. For information, refer to Table *6.1, page 638*.

NOTE:

MD #B6043 is for John Deere S6X0 Series only.

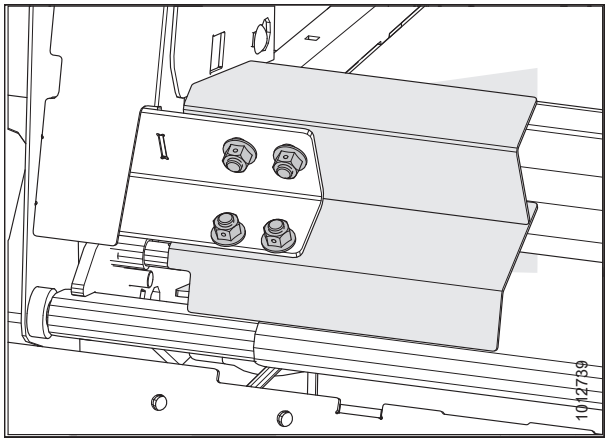

Figure 6.25: Stripper Bar

Table 6.1 Stripper Bar Configurations and Recommendations

Bundle (MD #)	Stripper Bar Length	Opening Width (Installed on FM100)	Recommended Feeder House Width
B6042	265 mm (10 1/2 in.)	1317 mm (52 in.)	1250–1350 mm (49–65 in.)
B6043	265 mm (10 1/2 in.) (with cutout)	1317 mm (52 in.)	For John Deere S6X0 Series only
B6044	325 mm (13 in.)	1197 mm (47 in.)	For specialty crops only
B6045	365 mm (14 1/2 in.)	1117 mm (44 in.)	1100 mm (43 1/2 in.) and below
B6046	403 mm (16 in.)	1041 mm (41 in.)	For specialty crops only
B6213	515 mm (20 in.)	817 mm (32 in.)	For specialty crops only

6.5.7 Auger Dent Repair Kit

This kit allows Operators to repair dents close to the finger/guide area that the feed auger may have sustained during regular use.

Attachment hardware and installation instructions are included in the kit.

MD #237563

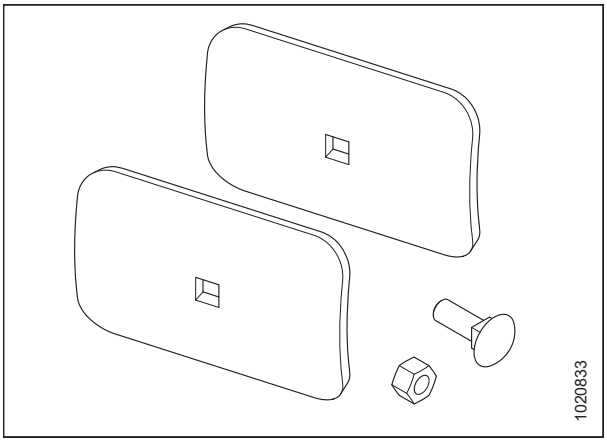

Figure 6.26: Auger Dent Repair Kit

6.5.8 Upper Cross Auger

Upper Cross Auger (A) attaches in front of the backtube and improves crop feeding into the center of the header in heavy crop conditions. It is ideal for high-volume harvesting of forages, oats, canola, mustard, and other tall, bushy, hard-to-feed crops.

Order from the following list of kits according to your header model:

For North American D1 Series headers:

- D115 – MD #B6280
- D120 – MD #B6281
- D125 – MD #B6461
- D130 – MD #B6462
- D135 – MD #B6463
- D140 – MD #B6464
- D145 – MD #B6465[57]

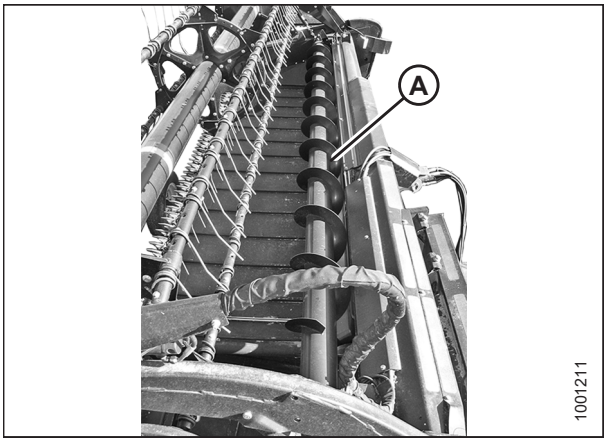

Figure 6.27: Upper Cross Auger

57. This is a 12.2 m (40 ft.) auger, and is backtube-mounted. It does **NOT** span the full length of the header.

6.5.9 European Combine Upper Cross Auger

European Combine Upper Cross Auger (UCA) (A) attaches in front of the backtube and improves crop feeding at the center of the header in heavy crop conditions.

This kit is ideal for high-volume harvesting of forages, oats, canola, rapeseed, mustard, and other tall, bushy, and hard-to-feed crops.

IMPORTANT:

This optional kit is **ONLY** available for European markets, and should **ONLY** be used on combines. Do **NOT** use the European Combine UCA on self-propelled windrowers, as damage will occur at higher operating speeds.

Installation instructions are included with the kit.

Order from the following bundles according to header model:

- D125 – MD #B6584
- D130 – MD #B6585
- D135 – MD #B6586
- D140 – MD #B6587
- D145 – MD #B6588[58]

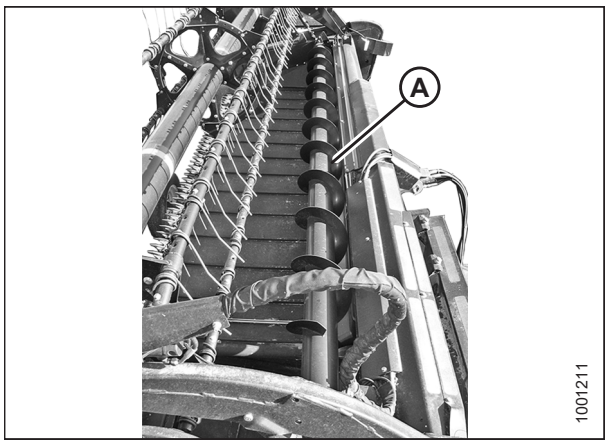

Figure 6.28: Upper Cross Auger

6.5.10 Rice Divider Rods

Rice divider rods attach to the left and right crop dividers and divide tall and tangled rice crops in a similar manner to standard crop divider rods performing in standing crops.

Installation instructions are included in the kit.

MD #B5609

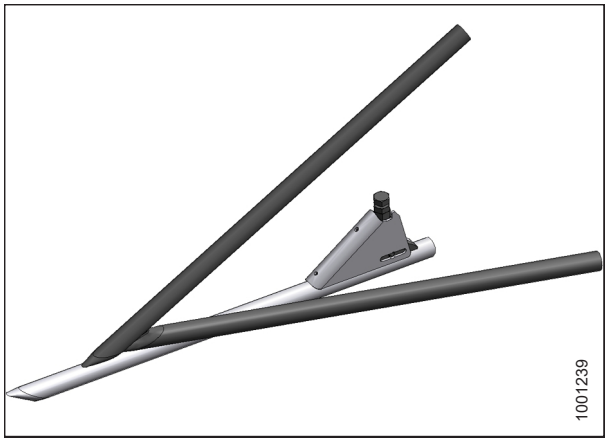

Figure 6.29: Rice Divider Rod

58. This is a 12.2 m (40 ft.) auger, and is backtube-mounted. It does **NOT** span the full length of the header.

6.5.11 Full Interface Filler Kit

The Full Interface Filler Kit eliminates the gap between the feed deck and header frame, increases seed collection.

NOTE:

This kit is only available for European-configured headers.

Installation instructions are included in the kit.

MD #B6446

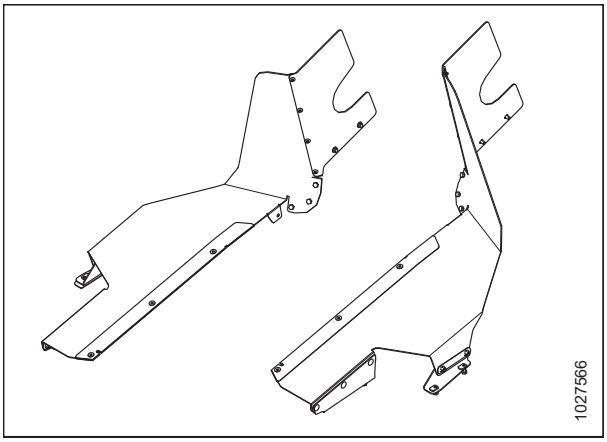

Figure 6.30: Full Interface Filler Kit

Chapter 7: Troubleshooting

7.1 Crop Loss

Table 7.1 Troubleshooting Crop Loss at Cutterbar

Problem	Solution	Refer to
Symptom: Does not pick up downed crop		
Cutterbar too high	Lower cutterbar	• *Cutting off the Ground, page 87* • *Cutting on the Ground, page 92*
Header angle too low	Increase header angle	*3.8.4 Header Angle, page 101*
Reel too high	Lower reel	*3.8.9 Reel Height, page 117*
Reel too far back	Move reel forward	*3.8.10 Reel Fore-Aft Position, page 123*
Ground speed too fast for reel speed	Increase reel speed or reduce ground speed	• *3.8.5 Reel Speed, page 109* • *3.8.6 Ground Speed, page 111*
Reel fingers not lifting crop sufficiently	Increase finger pitch aggressiveness	*3.8.11 Reel Tine Pitch, page 136*
Reel fingers not lifting crop sufficiently	Install crop lifters	See your MacDon Dealer
Symptom: Heads shattering or breaking off		
Reel speed too fast	Reduce reel speed	*3.8.5 Reel Speed, page 109*
Reel too low	Raise reel	*3.8.9 Reel Height, page 117*
Ground speed too fast	Reduce ground speed	*3.8.6 Ground Speed, page 111*
Crop too ripe	Operate at night when humidity is higher	—
Symptom: Material accumulating in gap between cut-out in endsheet and knifehead		
Crop heads leaning away from knifehead hole in endsheet	Add knifehead shields (except in damp or sticky soils)	*5.8.8 Knifehead Shield, page 499*
Symptom: Strips of uncut material		
Crowding uncut crop	Allow enough room for crop to be fed to cutterbar	—
Broken knife sections	Replace broken sections	*5.8.1 Replacing Knife Section, page 488*
Symptom: Excessive bouncing at normal field speed		
Float set too light	Adjust header float	*3.8.3 Header Float, page 94*
Symptom: Divider rod running down standing crop		
Divider rods too long	Remove divider rod	*3.8.12 Crop Dividers, page 139*

Table 7.1 Troubleshooting Crop Loss at Cutterbar (continued)

Problem	Solution	Refer to
Symptom: Crop not being cut at ends		
Reel not frowning or not centered in header	Adjust reel horizontal position or reel frown	• *3.8.10 Reel Fore-Aft Position, page 123* • *5.13.2 Reel Frown, page 577*
Knife hold-down clips not adjusted properly	Adjust hold-down clips so knife works freely but still keep sections from lifting off guards	• *Adjusting Hold-Downs with Pointed Guards, page 497* • *Adjusting Hold-Down with Stub Guards, page 498*
Knife sections or guards are worn or broken	Replace all worn and broken cutting parts	*5.8 Knife, page 487*
Header is not level	Level header	*3.10 Leveling the Header, page 348*
Reel fingers not lifting crop properly ahead of knife	Adjust reel position and/or finger pitch	• *3.8.10 Reel Fore-Aft Position, page 123* • *3.8.11 Reel Tine Pitch, page 136*
Divider runs down thick crop at ends preventing proper feeding due to material bridging the guards	Replace 3–4 end guards with stub guards	• *5.8.7 Knife Guards, page 493* • *6.3.5 Stub Guard Conversion Kit, page 629* • See your MacDon Dealer
Symptom: Bushy or tangled crop flows over divider rod, builds up on endsheets		
Divider rods providing insufficient separation	Install long divider rods	*3.8.12 Crop Dividers, page 139*
Symptom: Cut grain falling ahead of cutterbar		
Ground speed too slow	Increase ground speed	*3.8.6 Ground Speed, page 111*
Reel speed too slow	Increase reel speed	*3.8.5 Reel Speed, page 109*
Reel too high	Lower reel	*3.8.9 Reel Height, page 117*
Cutterbar too high	Lower cutterbar	• *Cutting off the Ground, page 87* • *Cutting on the Ground, page 92*
Reel too far forward	Move reel back on arms	*3.8.10 Reel Fore-Aft Position, page 123*
Cutting at speeds over 10 km/h (6 mph) with 10-tooth reel drive sprocket	Replace with 19-tooth reel drive sprocket	*5.14.3 Reel Drive Sprocket, page 606*
Worn or broken knife components	Replace components	*5.8 Knife, page 487*

7.2 Cutting Action and Knife Components

Table 7.2 Troubleshooting Cutting Action and Knife Components

Problem	Solution	Refer to
Symptom: Ragged or uneven cutting of crop		
Knife hold-down clips not adjusted properly	Adjust hold-down clips	• *Adjusting Hold-Downs with Pointed Guards, page 497* • *Adjusting Hold-Down with Stub Guards, page 498*
Knife sections or guards are worn or broken	Replace all worn and broken cutting parts	*5.8 Knife, page 487*
Knife is not operating at recommended speed	Check combine engine speed	Combine operator's manual
Ground speed too fast for reel speed	Reduce ground speed or increase reel speed	• *3.8.5 Reel Speed, page 109* • *3.8.6 Ground Speed, page 111*
Reel fingers not lifting crop properly ahead of knife	Adjust reel position/finger pitch	• *3.8.10 Reel Fore-Aft Position, page 123* • *3.8.11 Reel Tine Pitch, page 136*
Cutterbar too high	Lower cutting height	*Cutting off the Ground, page 87* or *Cutting on the Ground, page 92*
Header angle too flat	Steepen header angle	*3.8.4 Header Angle, page 101*
Bent knife causing binding of cutting parts	Straighten bent knife and align guards	*5.8.7 Knife Guards, page 493*
Cutting edge of guards not close enough or parallel to knife sections	Align guards	*5.8.7 Knife Guards, page 493*
Tangled/tough-to-cut crop	Install stub guards	• MacDon Dealer • *Adjusting Hold-Downs with Pointed Guards, page 497* or *Adjusting Hold-Down with Stub Guards, page 498* • *6.3.5 Stub Guard Conversion Kit, page 629*
Reel too far back	Move reel forward	*3.8.10 Reel Fore-Aft Position, page 123*
Loose knife drive belt	Adjust drive belt tension	*Checking and Tensioning, page 513*
Symptom: Knife plugging		
Reel too high or too far forward	Lower reel or move reel rearward	• *3.8.9 Reel Height, page 117* • *3.8.10 Reel Fore-Aft Position, page 123*
Ground speed too slow	Increase ground speed	*3.8.6 Ground Speed, page 111*
Loose knife drive belt	Adjust drive belt tension	*Checking and Tensioning, page 513*

Table 7.2 Troubleshooting Cutting Action and Knife Components (continued)

Problem	Solution	Refer to
Improper knife hold-down clip adjustment	Adjust hold-down clip	• *Adjusting Hold-Downs with Pointed Guards, page 497* • *Adjusting Hold-Down with Stub Guards, page 498*
Dull or broken knife section	Replace knife section	*5.8.1 Replacing Knife Section, page 488*
Bent or broken guards	Align or replace guards	*5.8.7 Knife Guards, page 493*
Reel fingers not lifting crop properly ahead of knife	Adjust reel position/ finger pitch	• *3.8.10 Reel Fore-Aft Position, page 123* • *3.8.11 Reel Tine Pitch, page 136*
Steel pick-up fingers contacting knife	Increase reel clearance to cutterbar or adjust header frown	• *5.13.1 Reel Clearance to Cutterbar, page 573* • *5.13.2 Reel Frown, page 577*
Float too heavy	Adjust springs for lighter float	*3.8.3 Header Float, page 94*
Mud or dirt build-up on cutterbar	Raise cutterbar by lowering skid shoes	*Cutting on the Ground, page 92*
Mud or dirt build-up on cutterbar	Flatten header angle	*3.8.4 Header Angle, page 101*
Knife is not operating at recommended speed	Check engine speed of combine or header knife speed	• Combine operator's manual • *Checking Knife Speed, page 116*
Symptom: Excessive header vibration		
Knife on double-knife drive not timed[59]	Adjust knife timing[59]	*Adjusting Timed Double-Knife Timing, page 521*
Knife not operating at recommended speed	Feederhouse speed or incorrect setting on header	Combine operator's manual
Excessive knife wear	Replace knife	• *5.8.2 Removing Knife, page 489* • *5.8.5 Installing Knife, page 491*
Loose or worn knifehead pin or drive arm	Tighten or replace parts	*5.8.1 Replacing Knife Section, page 488*
Incorrect knife speed	Adjust knife speed	*Checking Knife Speed, page 116*
Driveline U-joints worn	Replace U-joints	• *Removing Double-Reel Drive U-Joint, page 608* • *Installing Double-Reel U-Joint, page 609*
Bent cutterbar	Straighten cutterbar	MacDon Dealer

59. Applies to timed double-knife drive headers only.

Table 7.2 Troubleshooting Cutting Action and Knife Components (continued)

Problem	Solution	Refer to
Symptom: Excessive breakage of knife sections or guards		
Knife hold-down clips not adjusted properly	Adjust hold-down clips	• *Adjusting Hold-Downs with Pointed Guards, page 497* or • *Adjusting Hold-Down with Stub Guards, page 498*
Cutterbar operating too low in stony conditions	Raise cutterbar using skid shoes	*Cutting on the Ground, page 92*
Float is set too heavy	Adjust float springs for lighter float	*3.8.3 Header Float, page 94*
Bent or broken guard	Straighten or replace guard	*5.8.7 Knife Guards, page 493*
Header angle too steep	Flatten header angle	*3.8.4 Header Angle, page 101*
Symptom: Knife back breakage		
Bent or broken guard	Straighten or replace guard	*5.8.7 Knife Guards, page 493*
Worn knifehead pin	Replace knifehead pin	• *5.8.3 Removing Knifehead Bearing, page 490* • *5.8.4 Installing Knifehead Bearing, page 490*
Dull knife	Replace knife	• *5.8.2 Removing Knife, page 489* • *5.8.5 Installing Knife, page 491*

7.3 Reel Delivery

Use the following tables to determine the cause of reel delivery problems and the recommended repair procedure.

Table 7.3 Troubleshooting Reel Delivery

Problem	Solution	Refer to
Symptom – Reel not releasing material in normal standing crop		
Reel speed too fast	Reduce reel speed	*3.8.5 Reel Speed, page 109*
Reel too low	Raise reel	*3.8.9 Reel Height, page 117*
Reel tines too aggressive	Reduce cam setting	*3.8.11 Reel Tine Pitch, page 136*
Reel too far back	Move reel forward	*3.8.10 Reel Fore-Aft Position, page 123*
Symptom – Reel not releasing material in lodged and standing crop (reel fully lowered)		
Reel tines too aggressive for standing crop	Reduce cam setting (one or two)	*3.8.11 Reel Tine Pitch, page 136*
Symptom – Wrapping on reel end		
Reel tines too aggressive	Reduce cam setting	*3.8.11 Reel Tine Pitch, page 136*
Reel too low	Raise reel	*3.8.9 Reel Height, page 117*
Reel speed too fast	Reduce reel speed	*3.8.5 Reel Speed, page 109*
Crop conditions	Install optional endshields	*6.2.6 Reel Endshield Kit, page 626*
Reel not centered in header	Center reel in header	*5.13.3 Centering the Reel, page 578*
Symptom – Reel releases crop too quickly		
Reel tines not aggressive enough	Increase cam setting	*3.8.11 Reel Tine Pitch, page 136*
Reel too far forward	Move reel back	*3.8.10 Reel Fore-Aft Position, page 123*
Symptom – Reel will not lift		
Reel lift couplers are incompatible or defective	Change quick coupler	MacDon dealer
Symptom – Reel will not turn		
Quick couplers not properly connected	Connect couplers	Combine operator's manual.
Reel drive chain disconnected or broken	Connect/replace chain	• *5.14.6 Replacing Drive Chain on Double Reel, page 612* • *5.14.7 Replacing Single-Reel Header Drive Chain, page 614*
Symptom – Reel motion uneven under no load		
Excessive slack in reel drive chain	Tighten chain	*Tightening Reel Drive Chain, page 604*

Table 7.3 Troubleshooting Reel Delivery (continued)

Problem	Solution	Refer to
Symptom – Reel motion is uneven or stalls in heavy crops		
Reel speed too fast	Reduce reel speed	*3.8.5 Reel Speed, page 109*
Reel fingers not aggressive enough	Move to a more aggressive finger pitch notch	*3.8.11 Reel Tine Pitch, page 136*
Reel too low	Raise reel	*3.8.9 Reel Height, page 117*
Relief valve on combine (not on combine float module) has low relief pressure setting	Increase relief pressure to manufacturer's recommendations	Combine operator's manual
Low oil reservoir level on combine **NOTE:** Sometimes there is more than one reservoir	Fill to proper level	Combine operator's manual
Relief valve malfunction	Replace relief valve	Combine operator's manual
Cutting tough crops with standard torque (19-tooth) reel drive sprocket	Replace with high torque (10-tooth or 14-tooth) reel drive sprocket	*5.14.3 Reel Drive Sprocket, page 606*
Symptom – Plastic fingers cut at tip		
Insufficient reel to cutterbar clearance	Increase clearance	*5.13.1 Reel Clearance to Cutterbar, page 573*
Symptom – Plastic fingers bent rearward at tip		
Reel digging into ground with reel speed slower than ground speed	Raise header	• *Cutting off the Ground, page 87* • *Cutting on the Ground, page 92*
Reel digging into ground with reel speed slower than ground speed	Decrease header tilt	*3.8.4 Header Angle, page 101*
Reel digging into ground with reel speed slower than ground speed	Move reel aft	*3.8.10 Reel Fore-Aft Position, page 123*
Symptom – Plastic fingers bent forward at tip		
Reel digging into ground with reel speed faster than ground speed	Raise header	• *Cutting off the Ground, page 87* • *Cutting on the Ground, page 92*
Reel digging into ground with reel speed faster than ground speed	Decrease header tilt	*3.8.4 Header Angle, page 101*
Reel digging into ground with reel speed faster than ground speed	Move reel aft	*3.8.10 Reel Fore-Aft Position, page 123*

Table 7.3 Troubleshooting Reel Delivery (continued)

Problem	Solution	Refer to
Symptom – Plastic fingers bent close to tine tube		
Excessive plugging at cutterbar with wads of crop accumulating at cutterbar while maintaining reel operation	Correct plugging/cutting issues	*3.11 Unplugging the Cutterbar, page 350*
Excessive plugging at cutterbar with wads of crop accumulating at cutterbar while maintaining reel operation	Stop reel before plugging becomes excessive	*3.11 Unplugging the Cutterbar, page 350*

7.4 Header and Drapers

Table 7.4 Troubleshooting Header and Drapers

Problem	Solution	Refer to
Symptom: Insufficient header lift		
Low relief pressure	Increase relief pressure	MacDon Dealer
Symptom: Insufficient side draper speed		
Speed control set too low	Increase speed control setting	*3.8.7 Draper Speed, page 112*
Combine header drive too slow	Adjust to correct speed for combine model	Combine operator's manual
Symptom: Insufficient feed draper speed		
Relief pressure too low	Test side draper hydraulic system	MacDon Dealer
Combine header drive too slow	Adjust to correct speed for combine model	Combine operator's manual
Symptom: Feed draper will not move		
Drapers are loose	Tighten drapers	• *5.10.2 Checking and Adjusting Feed Draper Tension, page 530* • *5.12.3 Adjusting Draper Tension, page 557*
Drive or idler roller wrapped with material	Loosen draper and clean rollers	*5.10.2 Checking and Adjusting Feed Draper Tension, page 530*
Slat or connector bar jammed by frame or material	Loosen draper and clear obstruction	*5.10.2 Checking and Adjusting Feed Draper Tension, page 530*
Roller bearing seized	Replace roller bearing	*5.12.6 Draper Roller Maintenance, page 563*
Low hydraulic oil	Fill combine hydraulic oil reservoir to full level	Combine operator's manual
Material not feeding evenly off knife	Lower reel	*3.8.9 Reel Height, page 117*
Material not feeding evenly off knife	Install stub guards	• *5.8.7 Knife Guards, page 493* • *6.3.5 Stub Guard Conversion Kit, page 629* • MacDon Dealer
Symptom: Hesitation in flow of bulky crop		
Header angle too low	Increase header angle	*3.8.4 Header Angle, page 101*
Material overload on drapers	Increase side draper speed	*3.8.7 Draper Speed, page 112*
Material overload on drapers	Install upper cross auger	*6.5.8 Upper Cross Auger, page 639*
Material overload on drapers	Add flighting extensions	MacDon Dealer

Table 7.4 Troubleshooting Header and Drapers (continued)

Problem	Solution	Refer to
Symptom: Drapers back-feed		
Drapers running too slow in heavy crop	Increase draper speed	*3.8.7 Draper Speed, page 112*
Symptom: Crop is thrown across opening and under opposite side draper		
Drapers running too fast in light crop	Reduce draper speed	*3.8.7 Draper Speed, page 112*
Symptom: Material accumulates inside or under front edge of draper		
Deck height improperly adjusted	Adjust deck height	*5.12.5 Adjusting Deck Height, page 560*
Symptom: Material accumulating on end deflectors and releasing in bunches		
End deflectors too wide	For headers with manual deck shift only, trim deflector or replace with narrow deflector (MD #172381)	*3.11 Unplugging the Cutterbar, page 350*

Chapter 8: Reference

8.1 Torque Specifications

The following tables provide correct torque values for various bolts, cap screws, and hydraulic fittings.

- Tighten all bolts to torque values specified in charts (unless otherwise noted throughout this manual).
- Replace hardware with same strength and grade of bolt.
- Use torque value tables as a guide and periodically check tightness of bolts.
- Understand torque categories for bolts and cap screws by using their identifying head markings.

Jam nuts

When applying torque to finished jam nuts, multiply the torque applied to regular nuts by f=0.65.

Self-tapping screws

Standard torque is to be used (**NOT** to be used on critical or structurally important joints).

8.1.1 Metric Bolt Specifications

Table 8.1 Metric Class 8.8 Bolts and Class 9 Free Spinning Nut

Nominal Size (A)	Torque (Nm)		Torque (lbf·ft) (*lbf·in)	
	Min.	Max.	Min.	Max.
3-0.5	1.4	1.6	*13	*14
3.5-0.6	2.2	2.5	*20	*22
4-0.7	3.3	3.7	*29	*32
5-0.8	6.7	7.4	*59	*66
6-1.0	11.4	12.6	*101	*112
8-1.25	28	30	20	23
10-1.5	55	60	40	45
12-1.75	95	105	70	78
14-2.0	152	168	113	124
16-2.0	236	261	175	193
20-2.5	460	509	341	377
24-3.0	796	879	589	651

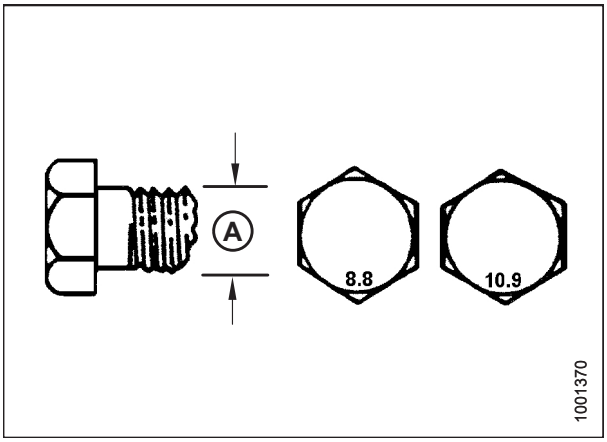

Figure 8.1: Bolt Grades

Table 8.2 Metric Class 8.8 Bolts and Class 9 Distorted Thread Nut

Nominal Size (A)	Torque (Nm)		Torque (lbf·ft) (*lbf·in)	
	Min.	Max.	Min.	Max.
3-0.5	1	1.1	*9	*10
3.5-0.6	1.5	1.7	*14	*15
4-0.7	2.3	2.5	*20	*22
5-0.8	4.5	5	*40	*45
6-1.0	7.7	8.6	*69	*76
8-1.25	18.8	20.8	*167	*185
10-1.5	37	41	28	30
12-1.75	65	72	48	53
14-2.0	104	115	77	85
16-2.0	161	178	119	132
20-2.5	314	347	233	257
24-3.0	543	600	402	444

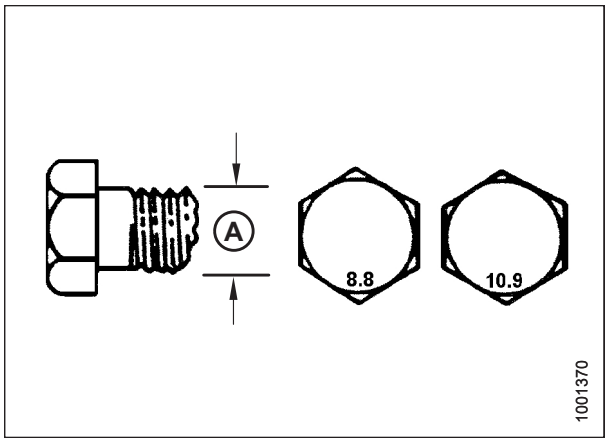

Figure 8.2: Bolt Grades

Table 8.3 Metric Class 10.9 Bolts and Class 10 Free Spinning Nut

Nominal Size (A)	Torque (Nm)		Torque (lbf·ft) (*lbf·in)	
	Min.	Max.	Min.	Max.
3-0.5	1.8	2	*18	*19
3.5-0.6	2.8	3.1	*27	*30
4-0.7	4.2	4.6	*41	*45
5-0.8	8.4	9.3	*82	*91
6-1.0	14.3	15.8	*140	*154
8-1.25	38	42	28	31
10-1.5	75	83	56	62
12-1.75	132	145	97	108
14-2.0	210	232	156	172
16-2.0	326	360	242	267
20-2.5	637	704	472	521
24-3.0	1101	1217	815	901

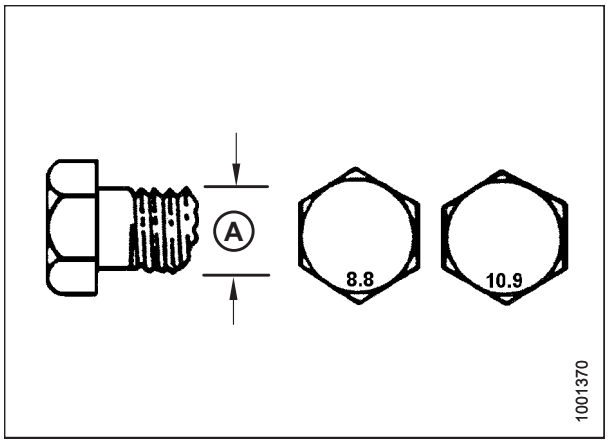

Figure 8.3: Bolt Grades

Table 8.4 Metric Class 10.9 Bolts and Class 10 Distorted Thread Nut

Nominal Size (A)	Torque (Nm)		Torque (lbf·ft) (*lbf·in)	
	Min.	Max.	Min.	Max.
3-0.5	1.3	1.5	*12	*13
3.5-0.6	2.1	2.3	*19	*21
4-0.7	3.1	3.4	*28	*31
5-0.8	6.3	7	*56	*62
6-1.0	10.7	11.8	*95	*105
8-1.25	26	29	19	21
10-1.5	51	57	38	42
12-1.75	90	99	66	73
14-2.0	143	158	106	117
16-2.0	222	246	165	182
20-2.5	434	480	322	356
24-3.0	750	829	556	614

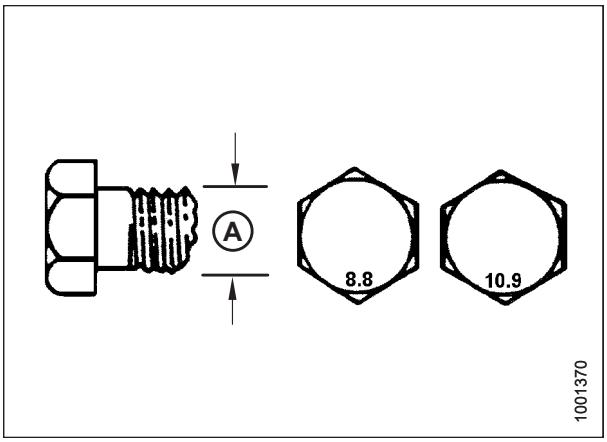

Figure 8.4: Bolt Grades

8.1.2 Metric Bolt Specifications Bolting into Cast Aluminum

Table 8.5 Metric Bolt Bolting into Cast Aluminum

Nominal Size (A)	Bolt Torque			
	8.8 (Cast Aluminum)		10.9 (Cast Aluminum)	
	Nm	lbf·ft	Nm	lbf·ft
M3	–	–	–	1
M4	–	–	4	2.6
M5	–	–	8	5.5
M6	9	6	12	9
M8	20	14	28	20
M10	40	28	55	40
M12	70	52	100	73
M14	–	–	–	–
M16	–	–	–	–

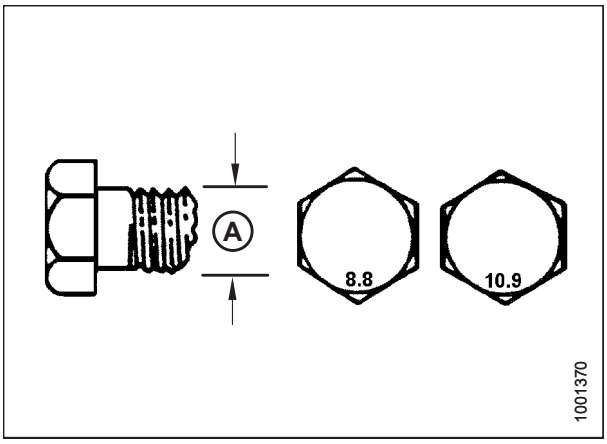

Figure 8.5: Bolt Grades

8.1.3 Flare-Type Hydraulic Fittings

1. Check flare (A) and flare seat (B) for defects that might cause leakage.
2. Align tube (C) with fitting (D) and thread nut (E) onto fitting without lubrication until contact has been made between flared surfaces.
3. Torque fitting nut (E) to specified number of flats from finger tight (FFFT) or to a given torque value in Table *8.6, page 656*.
4. Use two wrenches to prevent fitting (D) from rotating. Place one wrench on fitting body (D), and tighten nut (E) with other wrench to torque shown.
5. Assess final condition of connection.

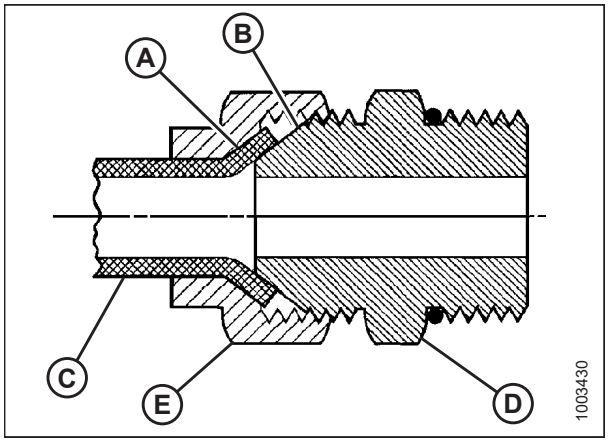

Figure 8.6: Hydraulic Fitting

Table 8.6 Flare-Type Hydraulic Tube Fittings

SAE Dash Size	Thread Size (in.)	Torque Value[60]		Flats from Finger Tight (FFFT)	
		Nm	lbf·ft	Tube	Swivel Nut or Hose
-2	5/16–24	4–5	3–4	—	—
-3	3/8–24	7–8	5–6	—	—
-4	7/16–20	18–19	13–14	2 1/2	2
-5	1/2–20	19–21	14–15	2	2
-6	9/16–18	30–33	22–24	2	1 1/2
-8	3/4–16	57–63	42–46	2	1 1/2
-10	7/8–14	81–89	60–66	1 1/2	1 1/2
-12	1 1/16–12	113–124	83–91	1 1/2	1 1/4
-14	1 3/16–12	136–149	100–110	1 1/2	1 1/4
-16	1 5/16–12	160–176	118–130	1 1/2	1
-20	1 5/8–12	228–250	168–184	1	1
-24	1 7/8–12	264–291	195–215	1	1
-32	2 1/2–12	359–395	265–291	1	1
-40	3–12	—	—	1	1

60. Torque values shown are based on lubricated connections as in reassembly.

8.1.4 O-Ring Boss Hydraulic Fittings – Adjustable

1. Inspect O-ring (A) and seat (B) for dirt or obvious defects.
2. Back off lock nut (C) as far as possible. Ensure that washer (D) is loose and is pushed toward lock nut (C) as far as possible.
3. Check that O-ring (A) is **NOT** on threads and adjust if necessary.
4. Apply hydraulic system oil to O-ring (A).

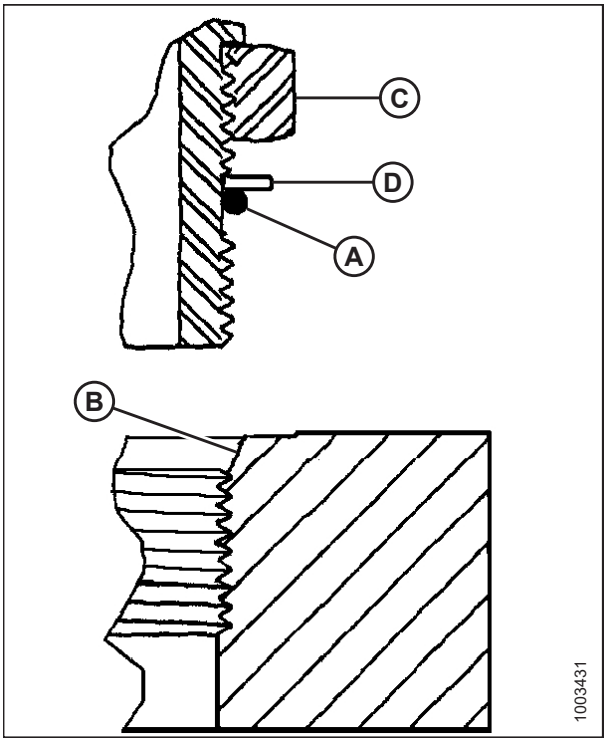

Figure 8.7: Hydraulic Fitting

5. Install fitting (B) into port until backup washer (D) and O-ring (A) contact part face (E).
6. Position angle fittings by unscrewing no more than one turn.
7. Turn lock nut (C) down to washer (D) and tighten to torque shown. Use two wrenches, one on fitting (B) and other on lock nut (C).
8. Check final condition of fitting.

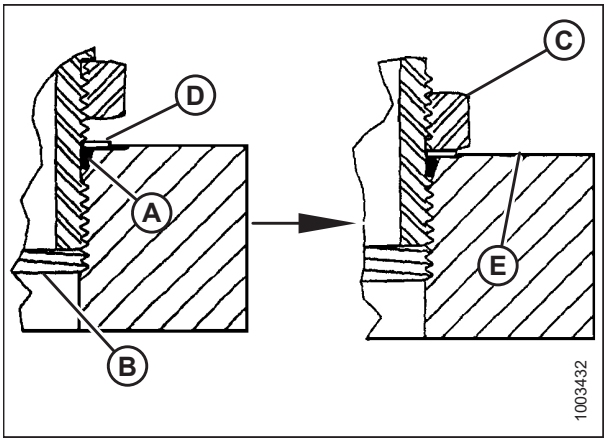

Figure 8.8: Hydraulic Fitting

Table 8.7 O-Ring Boss (ORB) Hydraulic Fittings – Adjustable

SAE Dash Size	Thread Size (in.)	Torque Value[61]	
		Nm	lbf·ft (*lbf·in)
-2	5/16–24	6–7	*53–62
-3	3/8–24	12–13	*106–115
-4	7/16–20	19–21	14–15
-5	1/2–20	21–33	15–24
-6	9/16–18	26–29	19–21
-8	3/4–16	46–50	34–37
-10	7/8–14	75–82	55–60
-12	1 1/16–12	120–132	88–97
-14	1 3/8–12	153–168	113–124
-16	1 5/16–12	176–193	130–142
-20	1 5/8–12	221–243	163–179
-24	1 7/8–12	270–298	199–220
-32	2 1/2–12	332–365	245–269

61. Torque values shown are based on lubricated connections as in reassembly.

8.1.5 O-Ring Boss Hydraulic Fittings – Non-Adjustable

1. Inspect O-ring (A) and seat (B) for dirt or obvious defects.
2. Check that O-ring (A) is **NOT** on threads and adjust if necessary.
3. Apply hydraulic system oil to O-ring.
4. Install fitting (C) into port until fitting is hand-tight.
5. Torque fitting (C) according to values in Table *8.8, page 659*.
6. Check final condition of fitting.

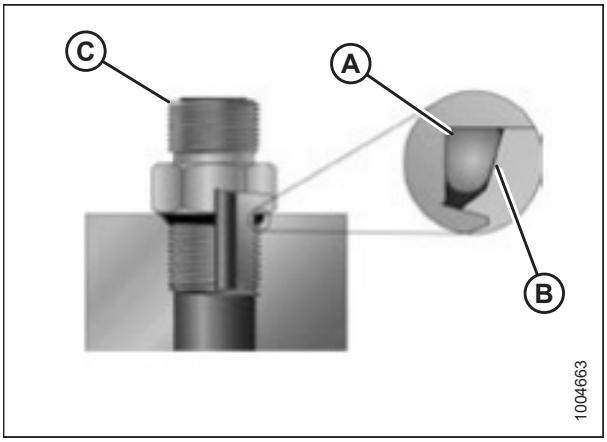

Figure 8.9: Hydraulic Fitting

Table 8.8 O-Ring Boss (ORB) Hydraulic Fittings – Non-Adjustable

SAE Dash Size	Thread Size (in.)	Torque Value[62]	
		Nm	lbf·ft (*lbf·in)
-2	5/16–24	6–7	*53–62
-3	3/8–24	12–13	*106–115
-4	7/16–20	19–21	14–15
-5	1/2–20	21–33	15–24
-6	9/16–18	26–29	19–21
-8	3/4–16	46–50	34–37
-10	7/8–14	75–82	55–60
-12	1 1/16–12	120–132	88–97
-14	1 3/8–12	153–168	113–124
-16	1 5/16–12	176–193	130–142
-20	1 5/8–12	221–243	163–179
-24	1 7/8–12	270–298	199–220
-32	2 1/2–12	332–365	245–269

62. Torque values shown are based on lubricated connections as in reassembly.

8.1.6 O-Ring Face Seal Hydraulic Fittings

1. Check components to ensure that sealing surfaces and fitting threads are free of burrs, nicks, scratches, or any foreign material.

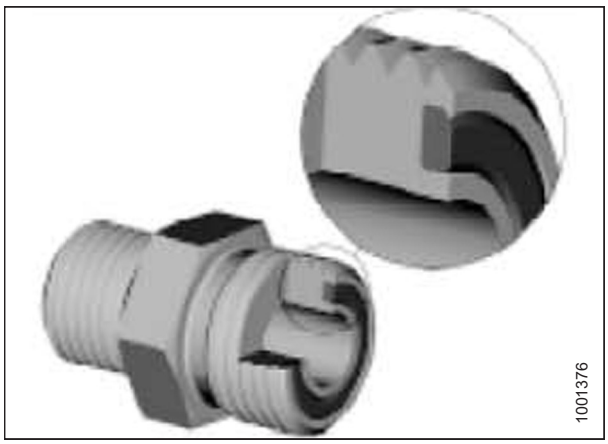

Figure 8.10: Hydraulic Fitting

2. Apply hydraulic system oil to O-ring (B).
3. Align tube or hose assembly so that flat face of sleeve (A) or (C) comes in full contact with O-ring (B).
4. Thread tube or hose nut (D) until hand-tight. The nut should turn freely until it is bottomed out.
5. Torque fittings according to values in Table *8.9, page 660*.

   NOTE:

   If applicable, hold hex on fitting body (E) to prevent rotation of fitting body and hose when tightening fitting nut (D).
6. Use three wrenches when assembling unions or joining two hoses together.
7. Check final condition of fitting.

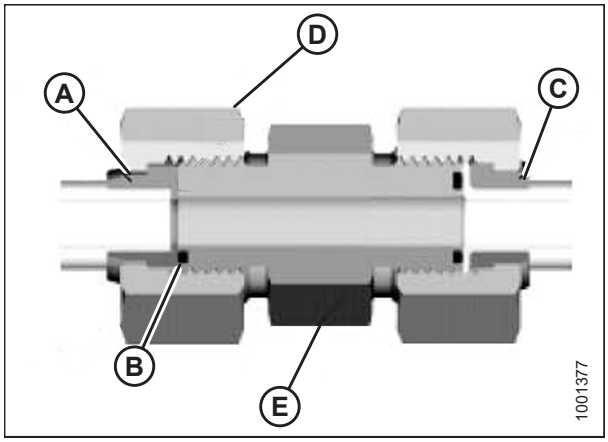

Figure 8.11: Hydraulic Fitting

Table 8.9 O-Ring Face Seal (ORFS) Hydraulic Fittings

SAE Dash Size	Thread Size (in.)	Tube O.D. (in.)	Torque Value[63]	
			Nm	lbf·ft
-3	Note[64]	3/16	–	–
-4	9/16	1/4	25–28	18–21
-5	Note[64]	5/16	–	–
-6	11/16	3/8	40–44	29–32
-8	13/16	1/2	55–61	41–45
-10	1	5/8	80–88	59–65
-12	1 3/16	3/4	115–127	85–94
-14	Note[64]	7/8	–	–

63. Torque values and angles shown are based on lubricated connection as in reassembly.
64. O-ring face seal type end not defined for this tube size.

Table 8.9 O-Ring Face Seal (ORFS) Hydraulic Fittings (continued)

SAE Dash Size	Thread Size (in.)	Tube O.D. (in.)	Torque Value[65]	
			Nm	lbf·ft
-16	1 7/16	1	150–165	111–122
-20	1 11/16	1 1/4	205–226	151–167
-24	1–2	1 1/2	315–347	232–256
-32	2 1/2	2	510–561	376–414

8.1.7 Tapered Pipe Thread Fittings

Assemble pipe fittings as follows:

1. Check components to ensure that fitting and port threads are free of burrs, nicks, scratches, or any form of contamination.
2. Apply pipe thread sealant (paste type) to external pipe threads.
3. Thread fitting into port until hand-tight.
4. Torque connector to appropriate torque angle. The turns from finger tight (TFFT) and flats from finger tight (FFFT) values are shown in Table *8.10, page 661*. Make sure that tube end of a shaped connector (typically 45° or 90°) is aligned to receive incoming tube or hose assembly. Always finish alignment of fitting in tightening direction. Never back off (loosen) pipe threaded connectors to achieve alignment.
5. Clean all residue and any excess thread conditioner with appropriate cleaner.
6. Assess final condition of fitting. Pay special attention to possibility of cracks to port opening.
7. Mark final position of fitting. If a fitting leaks, disassemble fitting and check for damage.

   NOTE:

   Overtorque failure of fittings may not be evident until fittings are disassembled.

Table 8.10 Hydraulic Fitting Pipe Thread

Tapered Pipe Thread Size	Recommended TFFT	Recommended FFFT
1/8–27	2–3	12–18
1/4–18	2–3	12–18
3/8–18	2–3	12–18
1/2–14	2–3	12–18
3/4–14	1.5–2.5	12–18
1–11 1/2	1.5–2.5	9–15
1 1/4–11 1/2	1.5–2.5	9–15
1 1/2–11 1/2	1.5–2.5	9–15
2–11 1/2	1.5–2.5	9–15

65. Torque values and angles shown are based on lubricated connection as in reassembly.

8.2 Conversion Chart

Table 8.11 Conversion Chart

Quantity	SI Units (Metric)		Factor	US Customary Units (Standard)	
	Unit Name	Abbreviation		Unit Name	Abbreviation
Area	hectare	ha	x 2.4710 =	acre	acres
Flow	liters per minute	L/min	x 0.2642 =	US gallons per minute	gpm
Force	Newton	N	x 0.2248 =	pound force	lbf
Length	millimeter	mm	x 0.0394 =	inch	in.
Length	meter	m	x 3.2808 =	foot	ft.
Power	kilowatt	kW	x 1.341 =	horsepower	hp
Pressure	kilopascal	kPa	x 0.145 =	pounds per square inch	psi
Pressure	megapascal	MPa	x 145.038 =	pounds per square inch	psi
Pressure	bar (Non-SI)	bar	x 14.5038 =	pounds per square inch	psi
Torque	Newton meter	Nm	x 0.7376 =	pound feet or foot pounds	lbf·ft
Torque	Newton meter	Nm	x 8.8507 =	pound inches or inch pounds	lbf·in
Temperature	degrees Celsius	°C	(°C x 1.8) + 32 =	degrees Fahrenheit	°F
Velocity	meters per minute	m/min	x 3.2808 =	feet per minute	ft/min
Velocity	meters per second	m/s	x 3.2808 =	feet per second	ft/s
Velocity	kilometers per hour	km/h	x 0.6214 =	miles per hour	mph
Volume	liter	L	x 0.2642 =	US gallon	US gal
Volume	milliliter	mL	x 0.0338 =	ounce	oz.
Volume	cubic centimeter	cm^3 or cc	x 0.061 =	cubic inch	$in.^3$
Weight	kilogram	kg	x 2.2046 =	pound	lb.

Index

A

AGCO combines
  replacing reel speed sensors 615
AGCO IDEAL™ Series combines
  attaching combine to header 388
  detaching combine from header 391
  feed auger configurations 62
  replacing reel speed sensors 615
AHHC
  auto header height control 23
  definition 23
API
  definition 23
ASTM
  definition 23
augers 466
  auger dent repair kit 639
  auger drive sprockets
    adjusting auger drive chain tension 470
  auger position 146
  auger to pan clearance 466
  drive chains
    adjusting chain tension 470
    checking chain tension 468
    installing 471
    lubricating 450
  feed auger configurations 62
    converting from
      medium to narrow 72
      medium to ultra narrow 81
      medium to wide 76
      narrow to medium 67
      narrow to ultra narrow 85
      narrow to wide 78
      ultra narrow to medium 67
      ultra narrow to narrow 75
      ultra narrow to ultra wide 78
      ultra narrow to wide 78
      wide to medium 70
      wide to narrow 72
      wide to ultra narrow 81
      wide to ultra wide 80
  fingers 474
    adjusting finger timing 485
    checking auger finger timing 484
    installing 476
    removing 474
    replacing finger guides 483
  flighting 371, 486
    optional FM100 feed auger flighting 636, 641
  tension springs
    checking and adjusting 58
  tines, *See* fingers
auto header height control
  AGCO IDEAL™ Series combines 163
    calibrating reel 168
    calibrating the header 171
    operating 174
    reviewing header in-field settings 176
    setting automatic header controls 170
    setting minimum reel speed 168
    setting up the header 163
  Case IH 120 series combines
    calibrating
      AHHC 196
  Case IH 230 combines
    calibrating
      AHHC 196
  Case IH 2300 combines
    sensor operation 149
    sensor output voltage
      checking voltage range manually 153
  Case IH 240 combines
    calibrating
      AHHC 196
  Case IH 250 combines
    calibrating
      AHHC 196
  Case IH 2500 combines
    sensor operation 149
    sensor output voltage
      checking voltage range manually 153
  Case IH 5088/6088/7088 combines
    sensor operation 149
    sensor output voltage
      checking voltage range manually 153
  Case IH 5130/6130/7130 combines
    adjusting
      preset cutting height 186
    checking voltage range manually 153
    sensor operation 149
    sensor output voltage 153
  Case IH 5140/6140/7140 combines
    adjusting
      preset cutting height 186
  Case IH 7010 combines
    calibrating
      AHHC 196
    sensor operation 149
    sensor output voltage
      checking voltage range manually 153
  Case IH 7120/8120/9120 combines
    sensor operation 149
    sensor output voltage

checking voltage range manually 153
Case IH 7230/8230/9230 combines
sensor operation 149
sensor output voltage
checking voltage range manually 153
Case IH 8010 combines
calibrating
AHHC 196
sensor operation 149
sensor output voltage
checking voltage range manually 153
Challenger 6 series combines
sensor operation 149
sensor output voltage
checking voltage range manually 153
Challenger 7 series combines
sensor operation 149
sensor output voltage
checking voltage range manually 153
CLAAS 500 series combines
sensor operation 149
sensor output voltage
checking voltage range manually 153
CLAAS 700 series combines
sensor operation 149
sensor output voltage
checking voltage range manually 153
CLAAS 8000/7000 series combines
setup 236
Gleaner R62/R72 series combines
sensor operation 149
sensor output voltage
checking voltage range manually 153
Gleaner R65/R66/R75/R76 series combines
sensor output voltage
checking voltage range from the cab 248
Gleaner R65/R75 series combines 248
adjusting ground pressure 256
adjusting raise/lower rate 255
adjusting sensitivity 257
calibrating AHHC 252
engaging AHHC 250
sensor operation 149
sensor output voltage
checking voltage range manually 153
troubleshooting alarms and faults 258
turning the accumulator off 254
Gleaner S series combines 248
Gleaner S series combines (pre-2016)
adjusting ground pressure 256
adjusting raise/lower rate 255
adjusting sensitivity 257
calibrating AHHC 252
engaging AHHC 250
sensor output voltage
checking voltage range from the cab 248
troubleshooting alarms and faults 258
turning the accumulator off 254
Gleaner S9 series combines 260
calibrating reel 265
calibrating the header 269
operating 273
reviewing header in-field settings 274
setting automatic header controls 267
setting minimum reel speed 265
setting up the header 260
John Deere 50 series combines
sensor output voltage
checking voltage range manually 153
John Deere 60 series combines
sensor operation 149
sensor output voltage
checking voltage range manually 153
John Deere 70 series combines
sensor operation 149
sensor output voltage
checking voltage range manually 153
John Deere S series combines
adjusting
sensitivity 295
adjusting raise/lower rate manually 296
calibrating AHHC 292
calibrating feeder house fore-aft tilt 300
sensor operation 149
sensor output voltage
checking voltage range from the cab 289
checking voltage range manually 153
John Deere T series combines
adjusting
sensitivity 295
adjusting raise/lower rate manually 296
calibrating AHHC 292
calibrating feeder house fore-aft tilt 300
sensor output voltage
checking voltage range from the cab 289
New Holland 2015 CR series combines
engaging AHHC 335
New Holland combines
10 V adapter (MD #B6421) 152
New Holland CR/CX series combines
sensor operation 149
sensor output voltage
checking voltage range manually 153
sensor output voltage
adjusting voltage limits
one sensor system 159
two sensor system 160
auto header height control (AHHC), *See* specific combine section
Case IH 120 series combines 189

adjusting
preset cutting height 205
sensor output voltage
checking voltage range from the cab..... 193
Case IH 130 series combines 180
Case IH 140 series combines 180
Case IH 230 series combines 189
adjusting
preset cutting height 205
sensor output voltage
checking voltage range from the cab..... 193
Case IH 2300 combines
calibrating
maximum stubble height 327
how AHHC works 148
sensor output voltage
combine output voltage requirements 151
Case IH 240 series combines 189
adjusting
preset cutting height 205
sensor output voltage
checking voltage range from the cab..... 193
Case IH 250 series combines 189
adjusting
preset cutting height 205
sensor output voltage
checking voltage range from the cab..... 193
Case IH 2500 combines
calibrating
maximum stubble height 327
how AHHC works 148
sensor output voltage
combine output voltage requirements 151
Case IH 5088/6088/7088 combines 177
adjusting
sensitivity..... 179
calibrating
AHHC 177
maximum stubble height 327
how AHHC works 148
sensor output voltage
combine output voltage requirements 151
Case IH 5130/6130/7130 combines
calibrating
AHHC 185
maximum stubble height 327
how AHHC works 148
sensor output voltage
checking voltage range from the cab..... 183
combine output voltage requirements 151
setting up header on combine display 180
Case IH 5140/6140/7140 combines
sensor output voltage
checking voltage range from the cab..... 183
setting up header on combine display 180
Case IH 7010 combines 189
calibrating
maximum stubble height 327
how AHHC works 148
sensor output voltage
checking voltage range from the cab..... 193
combine output voltage requirements 151
Case IH 7120/8120/9120 combines
calibrating
maximum stubble height 327
how AHHC works 148
sensor output voltage
combine output voltage requirements 151
Case IH 7230/8230/9230 combines
calibrating
maximum stubble height 327
how AHHC works 148
sensor output voltage
combine output voltage requirements 151
Case IH 8010 combines 189
calibrating
maximum stubble height 327
header controls
setting without a shift button on GSL..... 192
how AHHC works 148
sensor output voltage
checking voltage range from the cab..... 193
checking voltage range manually..... 189
combine output voltage requirements 151
Case IH combines
checking reel height sensor voltage..... 204
Case IH combines with version 28.00 software
calibrating the AHHC 199
Challenger 6 series combines 207
adjusting
header height 212
raise/lower rate 213
sensitivity..... 214
calibrating
AHHC 210
maximum stubble height 327
engaging AHHC..... 209
how AHHC works 148
sensor output voltage
checking voltage range from the cab..... 207
combine output voltage requirements 151
Challenger 7 series combines 207
calibrating
maximum stubble height 327
how AHHC works 148
sensor output voltage
checking voltage range from the cab..... 207
combine output voltage requirements 151
CLAAS 500 series combines..... 215
adjusting

auto reel speed 222
cutting height 217
cutting height manually 219
preset cutting height 217
sensitivity 219
calibrating
AHHC 215
maximum stubble height 327
how AHHC works 148
CLAAS 600 series combines 225
adjusting
auto reel speed 231
cutting height 228
reel height 235
sensitivity 229
calibrating
AHHC 225
reel height 232
CLAAS 700 series combines 225
adjusting
auto reel speed 231
cutting height 228
reel height 235
sensitivity 229
calibrating
AHHC 225
maximum stubble height 327
reel height 232
how AHHC works 148
CLAAS 8000/7000 series combines 236
adjusting auto reel speed 244
calibrating 238
setting cut and reel height 241
setting the sensitivity 242
Gleaner R62/R72 series combines
calibrating
maximum stubble height 327
combine output voltage requirements 151
how AHHC works 148
Gleaner R65/R75 series combines
calibrating
maximum stubble height 327
how AHHC works 148
sensor output voltage
combine output voltage requirements 151
John Deere 50 series combines
calibrating
maximum stubble height 327
sensor output voltage
combine output voltage requirements 151
John Deere 60 series combines 275
adjusting
drop rate valve threshold 281
sensing grain header height 279
sensitivity 280
calibrating
AHHC 277
maximum stubble height 327
how AHHC works 148
sensor output voltage
checking voltage range from the cab 275
combine output voltage requirements 151
turning the accumulator off 279
John Deere 70 series combines 282
adjusting
raise/lower rate manually 288
sensitivity 287
calibrating
AHHC 285
feeder house speed 285
maximum stubble height 327
how AHHC works 148
sensor output voltage
checking voltage range from the cab 282
combine output voltage requirements 151
John Deere S series combines 289
calibrating
maximum stubble height 327
reel height 306
checking reel height sensor voltage 303
how AHHC works 148
sensor output voltage
combine output voltage requirements 151
John Deere S/T series combines
adjusting
preset cutting height 297
John Deere S7 series combines 308
calibrating
feeder house 315
header 317
sensor output voltage
checking voltage range from cab 312
setting up header 308
John Deere T series combines 289
calibrating
reel height 306
checking reel height sensor voltage 303
sensor output voltage
combine output voltage requirements 151
New Holland 2015 CR series combines 332
calibrating AHHC 339
sensor output voltage
checking voltage range from the cab 332
setting preset cutting height 343
New Holland combines
checking reel height sensor voltage 342
New Holland CR series combines
setting maximum work height 345
New Holland CR/CX series combines 320
adjusting

header lower rate 329
header raise rate 328
preset cutting height 331
sensitivity 330
calibrating
AHHC 325
maximum stubble height 327
configuring
header tilt 346
header type 346
reel fore-aft 346
engaging AHHC 324
how AHHC works 148
sensor output voltage
checking voltage range from the cab 320
combine output voltage requirements 151
axle bolts 620

B

bearings
feed draper
drive roller bearing
installing 536
removing 534
replacing 534
idler roller bearing
replacing 538
idler roller bearings
replacing 565
knifehead bearings
installing 490
removing 490
side draper
replacing drive roller bearing 568
replacing idler roller bearings 538
belts
knife drive belts 510
non-timed 510
single knife
installing 512
removing 510
tensioning 513
timed double knife 514
adjusting timing 521
adjusting tracking 524
installing 518
removing 516
tensioning 519
timed V-belts
installing 515
removing 514
untimed double knife
installing 512
removing 510
tensioning 513
bolts
definition 23
break-in inspections 435
break-in periods 43

C

cams
adjusting reel cam 138
reel cam settings 136
Case IH combines
attaching combine to header 372
auger configurations 62, 67
detaching combine from header 377
center-links
definition 23
CGVW
definition 23
chains
auger drive chain
adjusting chain tension 470
checking drive chain tension 468
installing 471
lubricating 450
gearbox drive chain
adjusting chain tension 465
reel drive chain
adjusting chain tension 604
loosening 604
replacing
double-reel drive 612
single-reel drive 614
tightening 604
Challenger combines
attaching combine to header 380
auger configurations 62, 67
detaching combine from header 385
replacing reel speed sensors 615
CLAAS combines
attaching combine to header 401
auger configurations 62, 67
detaching combine from header 405
reel speed sensors
replacing on CLAAS 400 617
replacing on CLAAS 500/700 618
combines
attaching header to combine
AGCO IDEAL™ Series combines 388
Case IH 372
Challenger 380
CLAAS 401
Gleaner 380
John Deere 394
Massey Ferguson 380

New Holland CR/CX 408
attaching/detaching header 371
detaching combine from header
AGCO IDEAL™ Series 391
Case IH 377
Challenger 385
CLAAS 405
Gleaner 385
John Deere 398
Massey Ferguson 385
New Holland CR/CX 412
transporting header 354
on combine 354
towing the header 355
attaching to towing vehicle 355
component identification 29
D1 Series Draper Header 29
FM100 Float Module 30
conversion chart 662
CR feeder deflectors 416
crop delivery
options 636
crop divider rods 144
installing 145
removing 144
crop dividers 139
installing on header with latch option 141
installing on header without latch option 143
removing from header with latch option 139
removing from header without latch option 140
cutterbars
options 628
extended center filler 629
knife cutout cover 628
wearplates 628
unplugging 350
cutting
height 87
off the ground 87
adjusting stabilizer wheels 88
adjusting stabilizer/slow speed transport wheels 90
on the ground 92

D

D1 Series
definition 23
daily start-up checks 42
DDD
definition 23
decks
side drapers
adjusting deck height 560
definition of terms 23
divider latch kits 632
divider rods 144
installing 145
removing 144
DK
definition 23
DKD
definition 23
double reels
centering the reel 578
DR
definition 23
draper decks
drive rollers 566
idler rollers 563
draper deflectors 571–572
replacing 571
wide 637
draper drive systems
drapers
adjusting side draper speed 112
header draper
maintaining draper rollers 563
draper roller bearings
inspecting 563
drapers
adjusting side draper speed 112
draper decks
drive rollers 566
idler rollers 563
draper rollers
maintaining 563
float module 527
replacing feed draper 527
float modules
adjusting draper tension 530
checking draper tension 530
idler rollers
draper deck idler roller
installing 566
side draper decks
drive rollers
installing 569
removing 566
idler rollers
removing 563
side drapers
adjusting tension 557
adjusting tracking 559
installing 555
removing 554
speed 112
drive roller bearings
drive roller
replacing 534

feed draper drive roller
installing 536
removing 534
side draper drive roller
replacing drive roller bearing 568
drive rollers
feed draper 531
drive rollers
installing 533
removing 531
side drapers
installing 569
removing 566
drivelines
adjusting tension on gearbox drive chain 465
driveline guards
installing 463
removing 461
installing driveline 460
removing driveline 459
drives
header drive 459

E

electrical system
maintaining electrical system 458
replacing light bulbs 458
sensors
ahhc sensors 149
reel height sensor
replacing 121
reel speed sensor
replacing on AGCO 615
replacing on CLAAS 400 617
replacing on CLAAS 500/700 618
replacing on John Deere 617
endshields
adjusting 40
checking 40
closing 38
installing 39
opening 37
removing 38

F

feed auger configurations 62
feed deck
checking link holder hooks 545
feed deck pan
lowering 542
raising 544
feed deflectors 416
float module 547
installing on Gleaner combines 550
installing on New Holland CR combines 549
feed draper
idler roller 537
removing 537
feed drapers 527
adjusting draper tension 530
adjusting speed 114
checking draper tension 530
drive roller bearing
installing 536
removing 534
replacing 534
drive rollers 531
installing 533
removing 531
idler roller
installing 541
replacing feed draper 527
FFFT
definition 23
finger tight
definition 23
fingers
auger fingers 474
adjusting finger timing 485
checking finger timing 484
installing 476
removing 474
replacing finger guides 483
plastic reel fingers
installing 584
removing 583
steel reel fingers
installing 582
removing 581
flighting 371, 486
installing 353
removing 352
float 94
header float
checking and adjusting 95
header float locks 100
float modules 623
attaching float module to header 417
auger drive
adjusting auger drive chain tension 470
augers 466
auger fingers 474
adjusting finger timing 485
checking finger timing 484
installing 476
removing 474
replacing finger guides 483

auger to pan clearance 466
optional FM100 feed auger flighting.....636, 641
detaching from combine and header 423
feed auger configurations..... 62
feed deck
checking link holder hooks 545
feed deck pan
lowering..... 542
raising..... 544
feed deflectors 416, 547
replacing on Gleaner combines 550
replacing on New Holland CR combines 549
feed draper..... 527
adjusting draper tension 530
checking draper tension..... 530
drive roller..... 531
installing 533
removing 531
drive roller bearing
installing 536
removing 534
replacing..... 534
idler roller 537
installing 541
idler roller bearing
replacing..... 538
replacing feed draper 527
feed drapers
idler roller
removing 537
flighting.....371, 486
FM100 Float Module
component identification 30
setup 371
stripper bars..... 547
installing 548
kits..... 371
removing..... 547
unplugging..... 351
FM100 feed auger flighting 641
FM100 Float Module
options
augers
FM100 feed auger flighting 636
crop delivery
FM100 dual AHHC sensor kit 636

G

gearboxes
adjusting drive chain tension..... 465
header drive
adding oil 452
changing oil 453
checking oil level 451
lubricating 451
Gleaner combines
attaching combine to header 380
auger configurations..... 62, 67
detaching combine from header 385
replacing reel speed sensors 615
glossary 23
greasing
every 10 hours..... 438
every 100 hours..... 441
every 25 hours..... 438
every 250 hours..... 444
every 50 hours..... 439
every 500 hours..... 445
greasing procedure..... 446
maintenance schedule/records..... 432
ground speeds 111
GSL
definition..... 23
guards
adjusting knife guards..... 493
knife guards 493
replacing pointed guards 494
replacing stub guards..... 495
stub guard conversion kit 629
GVW
definition..... 23

H

header angles
adjustment range..... 101
header draper decks
installing idler rollers 566
header drapers, *See* side drapers
idler roller bearings
replacing 565
maintaining draper rollers 563
header drives..... 459
driveline guards
installing 463
removing..... 461
gearbox drive chain 465
installing driveline 460
removing driveline 459
header endshields 37
header safety props 34
headers
attaching float module..... 417
attachments..... 46
checking and adjusting..... 95
controls..... 45
definition..... 23
detaching from combine and float module 423
float..... 94–95

float locks 100
header angle
adjusting from combine 103
leveling 348
operating variables 61
optimizing for straight combining canola 57
options 632
recommended settings 46
setup 46
storing header 370
towing the header 355
transporting header
on combine 354
towing the header 355
attaching to towing vehicle 355
hex keys
definition 23
hold-down
checking hold-down 496
pointed guard
adjusting hold-down 497
stub guard
adjusting hold-down 498
hoses and lines
hydraulic 437
hydraulics
changing oil filter 457
fittings
flare-type 656
O-ring boss (ORB) adjustable 657
O-ring boss (ORB) non-adjustable 659
O-ring face seal (ORFS) 660
tapered pipe thread fittings 661
hoses and lines 437
hydraulic safety 6
reservoir 454
adding oil 455
changing oil 455
checking oil level 454

I

idler roller
feed draper idler roller 537
idler roller bearings
feed draper
replacing 538
header draper idler roller
replacing idler roller bearing 565
idler rollers
draper deck idler roller
installing 566
feed draper
installing 541
inspections
break-in inspections 435
maintenance schedule/records 432
introduction v

J

John Deere combines
attaching combine to header 394
auger configurations 62, 67
detaching combine from header 398
replacing reel speed sensors 617

K

knife drive belts, *See* belts
knife drive boxes
changing oil 509
checking box 500
checking mounting bolts 502
installing box 506
installing pulley 505
removing box 502
removing pulley 505
knife drive system 500
adjusting timed double-knife belt tracking 524
adjusting timed double-knife timing 521
checking and tensioning timed double-knife belts 519
knife guards 493
tensioning single-knife belt 513
tensioning untimed double-knife belt 513
knife drives
knife speed
checking knife speed 116
knife speed values 114
knife guards 493
See also hold-down clips
adjusting guards 493
checking guards 493
replacing pointed guards 494
replacing stub guards 495
knifehead bearings
installing 490
removing 490
knifehead shields 499
installing 499
knives 487
hold-down
adjusting hold-downs with pointed guards 497
adjusting hold-downs with stub guards 498
checking knife hold-down 496
installing knife 491
removing knife 489
replacing knife sections 488

spare knife location 492
troubleshooting 645

L

light bulbs
replacing 458
lodged crop reel finger kits 625
lubrication and servicing 438
auger drive chains 450
greasing procedure 446
header drive gearbox
changing oil 453
checking oil level 451
lubricating gearbox 451
reel drive chain
double reel 448

M

maintenance and servicing 429
electrical system 458
lubrication 438
maintenance specifications 430
preparing for servicing 429
preseason servicing 435
recommended fluids and lubricants 677
requirements 431
safety 5
schedule 432
service intervals 438
storage 370
maintenance requirements
servicing
break-in inspections 435
end of season servicing 436
maintenance schedule/records 432
Massey Ferguson combines
attaching header to combine 380
auger configurations 62, 67
detaching combine from header 385
replacing reel speed sensors 615
metric bolts
torque specifications 653
model numbers
records ix
motors
reel drive motor 610
reel drive motors
installing MD #273258 610
removing motor and MD #273258 610
multi-crop rapid reel conversion kits 129, 624

N

New Holland combines
10 V adapter (MD #B6421) 152
auger configurations 62, 67
New Holland CR/CX combines
attaching combine to header 408
detaching combine from header 412
New Holland feeder deflector 416
NPT
definition 23

O

oils
changing knife drive box oil 509
header drive gearbox
adding oil 452
operating variables
headers 61
operations 33
optimizing headers
straight combining canola 57
options 623
augers
auger dent repair kit 639
FM100 feed auger flighting 636
crop delivery 636
auger dent repair kit 639
draper deflector (wide) 637
FM100 dual AHHC sensor kit 636
FM100 feed auger flighting 641
stripper bars 638
upper cross auger (UCA) 352, 639
European combine upper cross auger 640
cutterbars 628
cutterbar wearplates 628
extended center filler 629
knife cutout cover 628
rock retarder kit 629
stub guard conversion kit 629
vertical knife plumbing kit 631
draper
in-cab draper speed control (ICDSC) kit 637
float modules 623
hillside extension kit 623
header 632
backsheet extension kit 634
divider latch kits 632
double vertical knife hose kits 630
rice divider rods 640
skid shoes 634
stubble light kit (John Deere only) 633
vertical knife kits 630
wheels

secondary stabilizer wheel 633
stabilizer wheels 632
stabilizer wheels and slow speed transport package 633
knifehead shields 499
installing 499
PR15 pick-up reels
reel endshield kit 626
tine tube reel conversion kits 626
reel arms
reel arm extension kit
European-configured headers 624
North American-configured headers 625
reel drive sprockets 110
reels 624
lodged crop reel finger kits 625
multi-crop rapid reel conversion kit 624
reel arm extension kit
European-configured headers 624
North American-configured headers 625
reel endshield kit 626
tine tube reinforcing kit 627
rice divider rods 146
transport systems 619
ORB
definition 23
owner/operator responsibilities 33

P

pick-up reels, *See* PR15 pick-up reels
PR15 pick-up reels 573
adjusting reel frown 577
centering
single reel 580
centering the reel
double reel 578
fore-aft position
adjusting 123
repositioning cylinders
double reel 126, 132
single reel 124
with multi-crop rapid reel option kit 129
frown 577
options 624
recommended setting 59
reel cam
adjusting reel cam 138
settings and guidelines 136
reel clearance 573
adjusting 576
measuring 574
reel drive motors 610
reel drive system 601
reel drives
adjusting chain tension 604
covers 601
installing 602
removing 601
double-reel drive U-joint
installing 609
removing 608
double-reel U-joint 608
drive sprockets 606
installing 607
optional for special conditions 110
removing 606
installing motors MD #273258 610
loosening chain 604
removing motor and MD #273258 610
replacing chain
double reel 612
single reel 614
tightening chain 604
reel endshields 598
replacing endshield supports 600
replacing endshields 598
reel fingers 581
installing plastic fingers 584
installing steel fingers 582
removing plastic fingers 583
removing steel fingers 581
reel height 117
reel height sensor 118
replacing sensor 121
reel safety props 35
disengaging 36
engaging 35
reel speed 109
reel tine pitch 136
replacing reel speed sensors 614
AGCO combines 615
CLAAS 400 617
CLAAS 500/700 618
John Deere combines 617
tine tube bushings 585
installing 591
removing 585
preseason servicing 435
product overview 23

R

recommended fluids and lubricants 677
recommended settings
header 46
reel 59
reel arm extension kit
European-configured headers 624
North American-configured headers 625

reel clearance
adjusting 576
measuring..... 574
reel drive chains
loosening..... 604
replacing on double-reel drive..... 612
replacing on single-reel drive 614
tightening 604
reel drive motors..... 610
reel drive system 601
reel drives
double-reel drive U-joint 608
double-reel U-joint
installing 609
removing..... 608
reel endshields..... 598
kit 626
replacing endshield supports..... 600
replacing endshields 598
reel fingers..... 581
installing plastic fingers 584
installing steel fingers 582
removing plastic fingers 583
removing steel fingers..... 581
reel fore-aft positions..... 123
adjusting 123
reel frown 577
adjusting 577
reel height sensor
CLAAS 8000/7000 series combines
calibrating 245
reel safety props 35
disengaging..... 36
engaging..... 35
reel speeds..... 109
reel system
recommended reel settings 59
reels
centering
single reel..... 580
centering the reel..... 578
double reel 578
references
torque specifications 653
rice divider rods 146, 640
rock retarder kits..... 629
RoHS
definition..... 23
rpm
definition..... 23

S

SAE
definition..... 23
safety 1
daily start-up checks 42
general safety..... 3
header safety props..... 34
hydraulic safety 6
maintenance safety 5
operational safety 34
reel safety props 35
safety alert symbols..... 1
safety sign decals 7
installing decals 7
interpreting decals 17
locations 8
signal words 2
screws
definition..... 23
SDD
definition..... 23
sealed bearings
installing..... 430
sensors
AHHC sensors 149
checking and adjusting reel height sensor..... 118
reel height sensor
replacing 121
reel speed sensor
replacing on AGCO 615
replacing on CLAAS 400 series..... 617
replacing on CLAAS 500/700 series 618
replacing on John Deere..... 617
serial numbers
locations..... ix
records..... ix
service intervals
lubrication 438
servicing, *See* maintenance and servicing
shutting down procedures 44
side draper decks
replacing drive roller bearing..... 568
skid shoes, *See* cutting on the ground
adjusting inner skid shoes..... 92
adjusting outer skid shoes 93
slow speed transport package..... 633
soft joints
definition..... 23
spare knives 492
specifications
product specifications 25
torque specifications 653
speeds
draper speed..... 112
feed draper speed..... 114
ground speed 111
header draper speed
adjusting speed 112

knife speed
checking knife speed 116
knife speed data 114
reel speed 109
spm
definition 23
sprockets 601–602, 606
adjusting reel drive chain tension 604
installing reel drive sprocket 607
loosening reel drive chain 604
optional reel drive sprocket 110
removing reel drive sprocket 606
tightening reel drive chain 604
SR
definition 23
stabilizer wheels 632–633
adjusting 88
secondary stabilizer wheel 633
stabilizer/slow speed transport wheels
adjusting 90
start-up
daily checks 42
storing the header 370
straight combining canola
optimizing headers 57
stripper bars 371, 638
float module 547
installing 548
removing 547
stub guard conversion kits 629

T

TFFT
definition 23
tine tubes
bushings
installing 591
removing 585
reel conversion kits 626
tine tube reinforcing kit 627
tire inflation/pressures 621
torque
definition 23
torque angles
definition 23
torque specifications 653
axle bolts 620
flare-type hydraulic fittings 656
metric bolt specifications 653
bolting into cast aluminum 655
O-ring boss (ORB) hydraulic fittings – adjustable 657
O-ring boss (ORB) hydraulic fittings – non-adjustable 659
O-ring face seal (ORFS) fittings 660
tapered pipe thread fittings 661
torque-tension
definition 23
tow-bars
attaching 367
removing 356
storing 357
towing the header 355
attaching to towing vehicle 355
converting from field to transport 362
moving wheels
front (left) wheels to transport position 362
rear (right) wheels to transport position 364
converting from transport to field 356
moving wheels
front (left) wheels to field position 359
rear (right) wheels to field position 360
removing tow-bar 356
storing tow-bar 357
transport systems 619
axle bolt torques 620
converting from field to transport 362
moving wheels
front (left) wheels to transport position 362
rear (right) wheels to transport position 364
converting from transport to field 356
moving wheels
front (left) wheels to field position 359
rear (right) wheels to field position 360
removing tow-bar 356
storing tow-bar 357
tire inflation/pressures 621
tow-bar, *See* tow-bars
transporting header 354
on combine 354
towing the header 355
attaching to towing vehicle 355
wheel bolt torques 619
troubleshooting 643
ahhc 150
crop loss at cutterbar 643
cutting action and knife components 645
float indicator 150
header and drapers 651
reel delivery 648
trucks
definition 23

U

U-joints
double-reel U-joint 608
installing double-reel U-joint 609
removing double-reel U-joint 608
UCA

definition 23
unplugging
cutterbar 350
float module 351
upper cross augers
installing flighting 353
removing flighting 352
upper cross augers (option) 352, 639
European combine upper cross auger (UCA) 640

V

Versatile combines
auger configurations 62, 67
vertical knife
options
double vertical knife hose kits 630
vertical knife mounts 630
plumbing kit 631

W

washers
definition 23
wheels and tires
stabilizer wheels (option) 632
stabilizer wheels and slow speed transport package (option) 633
tire inflation/pressures 621
wheel bolt torques 619
wheels
secondary stabilizer wheel (option) 633

Recommended Fluids and Lubricants

Ensure your machine operates at top efficiency by using clean fluids and lubricants only.

- Use clean containers to handle all fluids and lubricants.
- Store fluids and lubricants in an area protected from dust, moisture, and other contaminants.

Lubricant	Specification	Description	Use	Capacities
Grease	SAE multi-purpose	High temperature extreme pressure (EP) performance grease with 1% max. molybdenum disulphide (NLGI grade 2) lithium base	As required unless otherwise specified	—
Grease	SAE multi-purpose	High temperature extreme pressure (EP) performance grease with 10% max. molybdenum disulphide (NLGI grade 2) lithium base	Driveline slip-joints	—
Gear Lubricant	SAE 85W-140	API service class GL-5	Knife drive box	2.2 liters (2.3 quarts)
Gear Lubricant	SAE 85W-140	API service class GL-5	Main drive gearbox	2.5 liters (2.6 quarts)
Hydraulic Oil	Single grade transmission/ hydraulic fluid (THF). Recommended viscosity: • 60.1 cSt @ 40° C • 9.5 cSt @ 100° C Recommended brands: • AGCO Power Fluid 821 XL • Case Hy-Tran Ultraction • John Deere Hy-Gard J20C • Petro-Canada Duratran	Lubricant trans / hydraulic oil	Header drive systems reservoir	85 liters (22.5 US gallons)

MacDon

MacDon Industries Ltd.
680 Moray Street
Winnipeg, Manitoba
Canada R3J 3S3
t. (204) 885-5590 f. (204) 832-7749

MacDon, Inc.
10708 N. Pomona Avenue
Kansas City, Missouri
United States 64153-1924
t. (816) 891-7313 f. (816) 891-7323

MacDon Australia Pty. Ltd.
A.C.N. 079 393 721
P.O. Box 103 Somerton, Victoria, Australia
Australia 3061
t.+61 3 8301 1911 f.+61 3 8301 1912

MacDon Brasil Agribusiness Ltda.
Rua Grã Nicco, 113, sala 404, B. 04
Mossunguê, Curitiba, Paraná
CEP 81200-200 Brasil
t. +55 (41) 2101-1713 f. +55 (41) 2101-1699

LLC MacDon Russia Ltd.
123317 Moscow, Russia
10 Presnenskaya nab, Block C
Floor 5, Office No. 534, Regus Business Centre
t. +7 495 775 6971 f. +7 495 967 7600

MacDon Europe GmbH
Hagenauer Strasse 59
65203 Wiesbaden
Germany

CUSTOMERS
MacDon.com

DEALERS
Portal.MacDon.com

Trademarks of products are the marks of their respective manufacturers and/or distributors.

Printed in Canada