MacDon

M1170 Windrower

Parts Catalog

215980 Revision A

Original Instruction

The Harvesting Specialists.

M1170 Windrower, featuring Dual Direction® and Crossflex™ rear suspension

Published September 2022

NOTE:

Keep your MacDon publications up-to-date. The most current version can be downloaded from our website (*www.macdon.com*) or from our Dealer-only site (*https://portal.macdon.com*) (login required).

© 2022 MacDon Industries, Ltd.

The information in this publication is based on the information available and in effect at the time of printing. MacDon Industries, Ltd. makes no representation or warranty of any kind, whether expressed or implied, with respect to the information in this publication. MacDon Industries, Ltd. reserves the right to make changes at any time without notice.

Introduction

This Parts Catalog lists all the replacement parts that can be ordered for a MacDon M1170 Windrower.

Bold text is used to indicate updates made at the current revision level. With each new revision of the catalog, previous revisions are returned to regular text.

Electrical connectors used on MacDon products are available for sale but not listed in this catalog. For the list of available connectors, refer to the Electrical Connectors Parts Catalog (169641).

In this catalog, right-hand (RH) and left-hand (LH) are determined from the operator's position, facing forward with the windrower in cab-forward position. An arrow is sometimes used in illustrations to indicate cab-forward position as shown below.

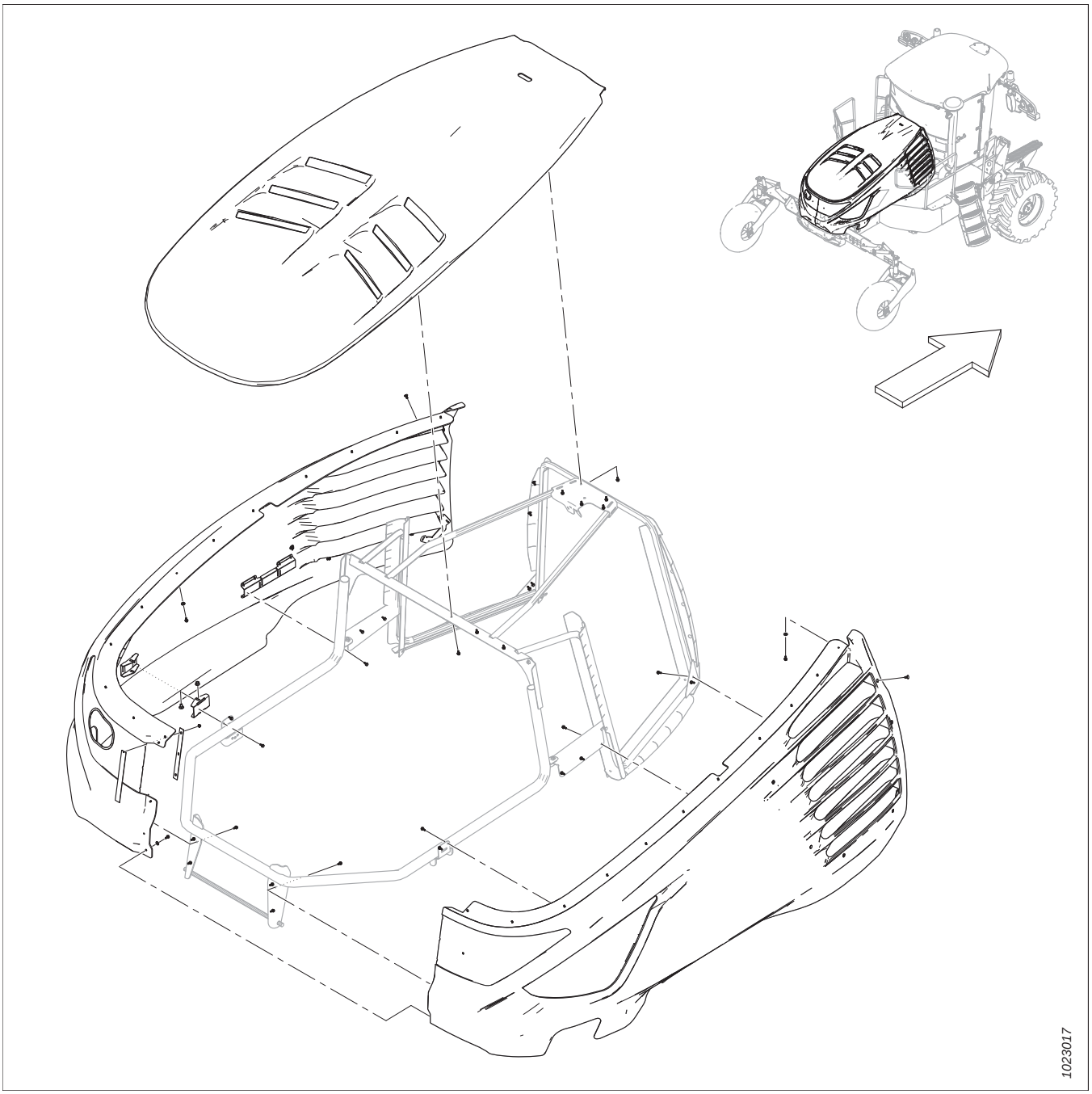

Abbreviations

A/R – as required (quantity varies)	ASSY – assembly	BHRN – button head rib neck
BV – ball valve	CCW – counterclockwise	CON – conical (spring washer)
CSK – countersink	C/W – complete with	CW – clockwise
DBLE – double	DK – double knife	DR – double reel
DT – distorted thread	FLG – flange	GA – gauge
GR – grade	GS – grass seed	HD – head
HDR – header	HFA – hydraulic fore-aft	HH – hex head
HNBR – hydrogenated nitrile butadiene rubber	HYD – hydraulic	I.D. – inside diameter
IP – internal plus (torx plus)	KP – knife pressure	KR – knife return
LG – long	LH – left hand (determined from Operator's position, facing forward)	LK – lock
MACH – machine	MD – MacDon	MFA – manual fore-aft
MY – model year	NC – national coarse thread	NF – national fine thread
NSS – not sold separately	NT – narrow transport	O.D. – outside diameter
OPT – optional	PO – pilot operated	PT – pull-type (mower conditioner)
RC – roller chain	REF – reference, part number called up elsewhere in catalog	REG – regular
RH – right hand (determined from Operator's position, facing forward)	RHSN – round head, square neck or square neck carriage bolt	RHSSN – round head, short, square neck
RTD – rotating tine drum	SAE – Society of Automotive Engineers (part produced to comply with)	SD – side draper
SER – serrated	SK – single knife	SKT HD – socket head
SMTH – smooth	SMV – slow moving vehicle	SOCK – socket
SP – self-propelled (windrower) header	SPCL – special	SPH – spherical
SPI – serrations per inch (knife Sections)	SR – single reel	STL – steel (stainless)
STR – standard	STVR – Stover	TFL – thread full length
THD – thread	TR – triple reel	UCA – upper cross auger
UDK – untimed double knife	UNC – unified coarse thread	UNEF – unified extra fine thread
UNF – unified fine thread	UNS – unified special thread series	VK – veritcal knife
WF – wide frame	ZP – zinc plated	

Serial Number Breaks

The side of the serial number on which the dash (–) appears determines whether the part is used "up to" or "after" the serial number given.

Example:

- –162249 Used on machines up to and including serial number 166249.
- 166250– Used on machines including and after serial number 166250.

Summary of Changes – M1170 (215980 Rev. A)

This list covers changes made since the last revision (215618 Rev. A).

Section	Summary of Change	Internal Use Only
7 Diesel Exhaust Fluid Plumbing, page 15	Added red cable ties 40702. Updated illustration from 1023251 to 1039757.	ECN 62313
—	Removed Section *Casters – Single Side (Mud) 11 x 16*. This bundle is not offered.	Marketing
19 Engine Air Intake, page 45	Added bolt 136211 and washer 184711. Replaced nut 135927 with 320206. Changed quantity of bolt 184665 from 2 to 1. Updated illustration from 1019025 to 1039754.	ECN 62629
21 Engine Cooling System, page 49	Added panel assembly 306796 for model year 2022 and later windrowers.	ECN 63076
25 Radiator Plumbing, page 59	Added constant-torque clamp 306647 as an alternative to heat shrink clamp kit 306120. Updated illustration from 1015870 to 1039773.	ECN 62206
32 Roof – Standard and Deluxe Cab, page 73	Removed roof harness 141362, which is no longer in stock. Added roof harness 309023, which was previously removed from the catalog; remaining stock of harness 309023 can be used on 2022 and prior windrowers; new harness 309056 must be used on 2023 and later windrowers. Added footnotes and revised serial number breaks.	Parts
	Standard cab roof assembly 306486 and deluxe cab roof assembly 306475 replaced by stripped roof assemblies 306616 and 306617 for service. Revised footnotes.	ECN 61978 ECN 62469
	Removed the roof lights from this section and added them to a new section called *Roof – Lighting*. Updated illustration from 1036463 to 1039274.	Publications, Product Support
33 Roof – Lighting, page 77	Added a new section that includes only the roof lighting, with new illustration 1039281.	Publications, Product Support
	Changed LED light 306465 model from circular housing to square housing.	ECN 61978 ECN 62469
	Added bulbs 109224 and 208192 as service parts for the superseded halogen lights.	Publications
39 Cab Suspension, page 93	Stabilizer link 183209 discontinued by the supplier and superseded by 306692. Added footnotes to order 183209 until stock is depleted, then order 306692.	ECN 62800
46 Heating, Ventilation, and Air Conditioning – Chassis, page 107	Added red cable ties 40702.	ECN 62313
	Added missing hex bolt 135783. Updated illustration from 1023265 to 1039789.	Publications
69 Wheel Drive – Service Parts, Ten Bolt, page 161	Added hub 306395 and dowel pin 306394 as service parts for drive wheel 306386. Updated illustration from 1015673 to 1039171.	ECN 60377
	Updated bearing service part numbers: Replaced bearings 163749–163752 with 306670–306673.	ECN 62371
70 Wheel Drive – Service Parts, Twelve Bolt, page 165	Cover 310664 superseded by 30205. Plunger 310680 superseded by 111093. O-ring 310681 superseded by 111105.	ECN 62371

Section	Summary of Change	Internal Use Only
73 Header Drive – Manifold Multicoupler Assembly, page 171	Swapped reference numbers for fittings 135788 and 135778, which were incorrectly labelled.	Publications, G270058
95 Electrical – Chassis, page 217	Added resistor pack 208769 as a service part for the chassis harness.	Support
	Chassis harness 306164 superseded by 306450.	ECN 63081
97 Electrical – Chassis Components, page 223	Changed extension module mounting hardware from 20-mm bolt 184641 to 35-mm bolt 184643. Updated model of extension module 201396. Updated illustration from 1015879 to 1039195.	ECN 63208
103 Electrical – Firewall Modules, page 237	Changed master controller mounting hardware from 35-mm bolt 184643 to 45-mm bolt 136731. Changed extension module mounting hardware from 20-mm bolt 184641 to 35-mm bolt 184643. Updated model of extension module 201396.	ECN 63208
	Added cutout to mounting plate 203204. Updated illustration from 1015850 to 1039197.	ECN 60928
105 Decals – Safety, page 241	Added nitrite-free decal 306756 for model year 2022 and later windrowers. Updated illustration from 1030657 to 1039163.	ECN 63076
106 Decals – Information and Reflectors, page 243	Added Reel Drop Rate decal 167897.	ECN 61319
	Added amber reflector 346208, which is included on the tool box door assembly 306579. Updated illustration from 1037280 to 1039839.	Publications
118 (Option) Reel Drop Rate Adjustment, page 267	Added Reel Drop Rate decal 167897.	ECN 61319
121 (Option) Trimble® Autopilot™ – Hydraulics (2018 and Prior), page 273	Replaced steering manifold assembly 173118 with 173656; 173118 is now out of stock. Stock is still available for superseded directional valve 173590 and solenoid coil 173561. Superseding valve and coil (173653 and 173654) on ECN 59036 were not introduced into this catalog revision.	Parts
• *122 (Option) Trimble® Autopilot™ – Electrical (2019–2022), page 277* • *123 (Option) Trimble® Autopilot™ – Electrical (2023), page 279*	Updated model year compatibilities for Trimble Autopilot kits B6601 and B9032. Updated serial number breaks.	Engineering
124 (Option) Trimble® Autopilot™ – Hydraulics (2019 and Later), page 281	Replaced steering manifold assembly 173118 with 173656; 173118 is now out of stock. Stock is still available for superseded directional valve 173590 and solenoid coil 173561. Superseding valve and coil (173653 and 173654) on ECN 59036 were not introduced into this catalog revision.	Parts
• *126 (Option) Trimble® EZ-Pilot® – Electrical (2019–2022), page 287* • *127 (Option) Trimble® EZ-Pilot® – Electrical (2023), page 289*	Updated model year compatibilities for Trimble EZ-Pilot kits B6602 and B9031. Updated serial number breaks.	Engineering
128 (Option) Trimble® GFX Compatibility for M1 Series (2017–2022), page 291	Added illustration 1039155. Revised title and added note to clarify the GFX compatibility kit is required only for pre-2023 windrowers.	Publications

Introduction i
Abbreviations ii
Serial Number Breaks iii
Summary of Changes – M1170 (215980 Rev. A) iv

1 Wheel Legs 1
2 Left Platform and Toolbox 3
3 Left Platform Mechanism 5
4 Right Platform 7
5 Right Support and Tanks 9
6 Diesel Exhaust Fluid Tank 13
7 Diesel Exhaust Fluid Plumbing 15
8 Walking Beam 19
9 Anti-Shimmy 21
10 Casters – Suspended 16.5-16.1 23
11 Drive Wheels and Tires – Ten Bolt 25
12 Drive Wheels and Tires – Twelve Bolt 27
13 Lift Linkage 29
14 Lift Linkage Cylinders 33
15 Float Sensors 35
16 Center-Link 37
17 Engine Sub Assembly 41
18 Fuel System 43
19 Engine Air Intake 45
20 Engine Exhaust 47
21 Engine Cooling System 49
22 Cooling Module – Left 53
23 Cooling Module – Right 55
24 Charge Air Cooler Plumbing 57
25 Radiator Plumbing 59
26 Hood 61
27 Hood Frame 63
28 Hood Latch Mechanism 65
29 Hood Gas Shocks – Standard 67
30 Rear Lights and Bezels 69
31 Cab-Forward Lighting and Marking 71
32 Roof – Standard and Deluxe Cab 73
33 Roof – Lighting 77
34 Headliner – Radio, Speakers, and Relay Module 79
35 Roof Relay Module – Service Parts 83
36 Cab GPS Bulkhead/Display Mount 85
37 Cab Interior and Upholstery 87
38 Cab Exterior and Air Intake Stack 89
39 Cab Suspension 93

40 Windows 95
41 Doors 97
42 Wipers 99
43 Mirror Arms, Beacons, and Reflectors 101
44 Cab Air Conditioning and Heating 103
45 Cab Air Conditioning and Heating – Service Parts 105
46 Heating, Ventilation, and Air Conditioning – Chassis 107
47 Standard Cab Components 109
48 Deluxe Cab Components 111
49 Standard Operator's Seat 113
50 Standard Seat Suspension 115
51 Deluxe Operator's Seat 117
52 Deluxe Seat Suspension 119
53 Trainer's Seat 121
54 Steering Column and Seat Base 123
55 Steering Column – Service Parts 127
56 Ground Speed Lever, Cable, and Display 129
57 Console Components 131
58 Steering and Ground Speed Control (under Cab) 135
59 Neutral Interlock and Pintle Arms 139
60 Engine Gearbox 141
61 Traction Drive Pump 143
62 Traction Drive Pump – Service Parts 145
63 Left-Hand Pump Stack 147
64 Gear Pump Replace Service Kit 151
65 Disc/Knife Drive Pump – Service Parts 153
66 Lift/Fan Pump – Service Parts 155
67 Wheel Drive Assembly – Ten Bolt 157
68 Wheel Drive Assembly – Twelve Bolt 159
69 Wheel Drive – Service Parts, Ten Bolt 161
70 Wheel Drive – Service Parts, Twelve Bolt 165
71 Wheel Drive Motor 167
72 Header Drive – Frame Interface 169
73 Header Drive – Manifold Multicoupler Assembly 171
74 Header Drive – Fitting Manifold Frame Assembly 175
75 Header Drive – Charge Filter Frame Assembly 177
76 Drive Manifold – Service Parts 179
77 Float Selector Manifold 181
78 Charge Manifold 183
79 Hydraulics – Tank Fittings 185
80 Hydraulics – Fan/Lift Manifold (Accumulator Replace) 187
81 Lift/Fan Manifold – Valves and Coils 189
82 Lift/Fan Manifold – Plugs and Fittings 191

83 Hydraulics – Fan Drive Lines 193
84 Hydraulics – Oil Cooler Lines 195
85 Hydraulics – Frame Fittings 197
86 Junction Manifold – Service Parts 199
87 Hydraulics – Charge Lines, Salami Gear Pump (2019 and Prior) 201
88 Hydraulics – Charge Lines, Turolla Gear Pump (2020 and Later) 203
89 Hydraulics – Open Drive Lines 205
90 Hydraulics – Closed Drive Lines 207
91 Hydraulics – Traction Drive 209
92 Hydraulics – Control Lines 211
93 Hydraulics – Lift System 213
94 Hydraulics – Line Supports 215
95 Electrical – Chassis 217
96 Main Fuse Panel 221
97 Electrical – Chassis Components 223
98 Chassis Relay Module and Fuse Panel Assembly 225
99 Chassis Relay Module – Service Parts 227
100 Electrical – Battery and Cover 229
101 Electrical – Battery Cables 231
102 Electrical – Engine 233
103 Electrical – Firewall Modules 237
104 Electrical – Wheel Legs 239
105 Decals – Safety 241
106 Decals – Information and Reflectors 243
107 Decals – Product Identification 245
108 (Option) Bluetooth Software Interface Module 247
109 (Option) Center-Link Self-Alignment 249
110 (Option) Coolant Heater Kit 251
111 (Option) Counterweights – Rear Ballast 253
112 (Option) DWA Shut-Off Kit 255
113 (Option) Float Booster Spring 257
114 (Option) Float Booster Spring Doubler 259
115 (Option) High Debris Cooler Intake 261
116 (Option) Neutral Setting Service Kit 263
117 (Option) Quick Couplers 265
118 (Option) Reel Drop Rate Adjustment 267
119 (Option) Service Filters Kit 269
120 (Option) Trimble® Autopilot™ – Electrical and Display Mount (2018 and Prior) 271
121 (Option) Trimble® Autopilot™ – Hydraulics (2018 and Prior) 273
122 (Option) Trimble® Autopilot™ – Electrical (2019–2022) 277
123 (Option) Trimble® Autopilot™ – Electrical (2023) 279
124 (Option) Trimble® Autopilot™ – Hydraulics (2019 and Later) 281
125 (Option) Trimble® EZ-Pilot® – Electrical and Display Mount (2018 and Prior) 285

126 (Option) Trimble® EZ-Pilot® – Electrical (2019–2022) 287
127 (Option) Trimble® EZ-Pilot® – Electrical (2023) 289
128 (Option) Trimble® GFX Compatibility for M1 Series (2017–2022) 291
129 (Option) Trimble® TMX Compatibility Kits 293
130 (Option) Aftermarket GPS Steering Wheel Kits 295
131 (Option) Weight Box 297
Index 300

1 Wheel Legs

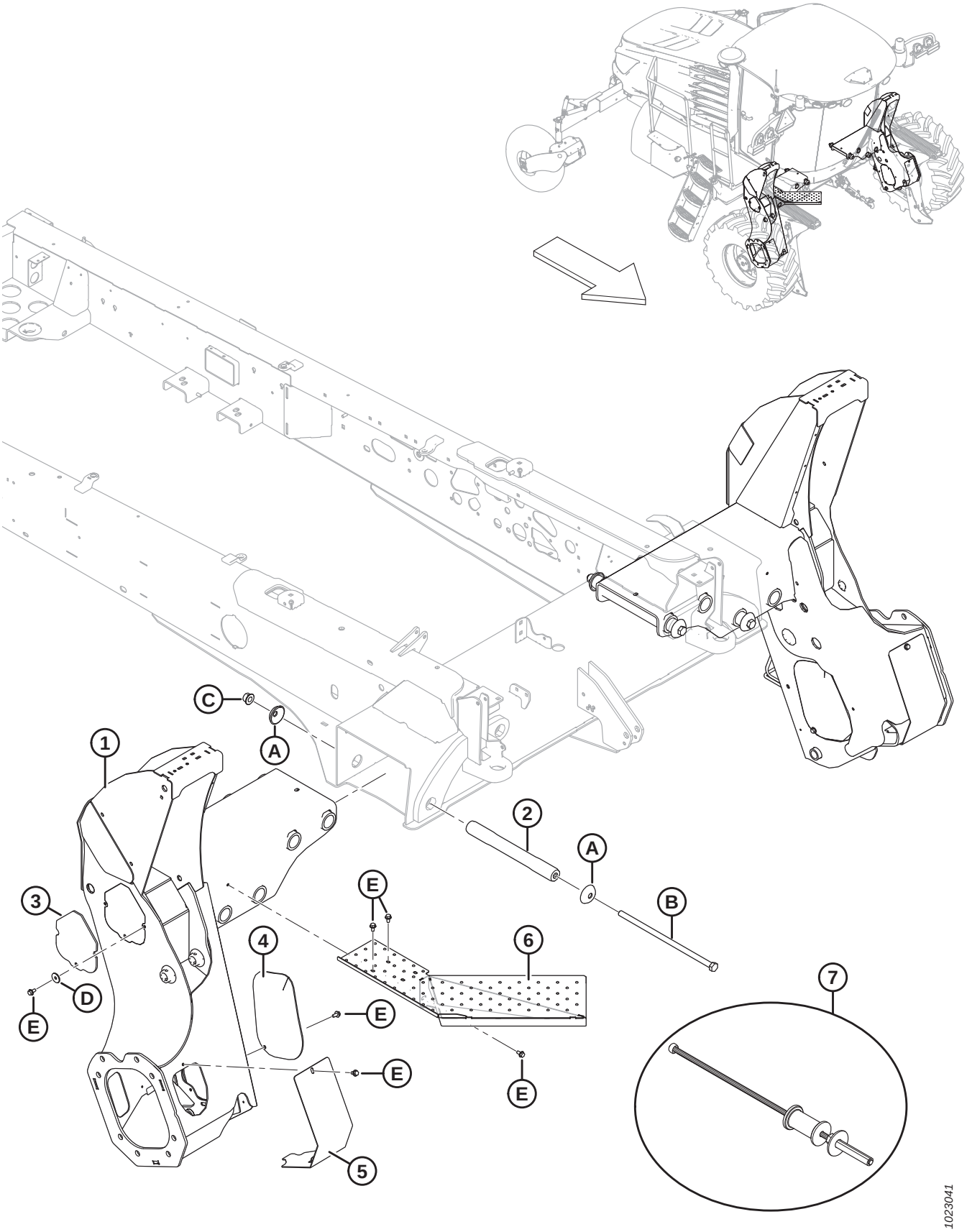

WHEEL LEGS

Ref	Part Number	Description	Qty	Serial Number
1	207615	LEG – RH	1	
	207616	LEG – LH	1	
2	207585	PIN – LEG TO FRAME	4	
3	207617	COVER – LEG ACCESS	2	
4	207618	COVER – LEG INNER RH	1	
	207619	COVER – LEG INNER LH	1	
5	207620	COVER – LEG LOWER RH	1	
	207621	COVER – LEG LOWER LH	1	
6	208262	STEP – WINDSHIELD ACCESS	1	
7	209816	ASSY – LEG PIN REMOVAL TOOL	A/R	
A	208340	WASHER – FORMED		
B	136134	BOLT – HEX HD M20 X 2.5 X 500 X SPCL-8.8-A3L		
C	136122	NUT – HEX FLG CTR LOC M20 X 2.5-10-A3L		
D	16652	WASHER – FLAT		
E	136209	SCREW – HEX WASHER HD M10 X 1.5 X 20-450HV-A3L		

2 Left Platform and Toolbox

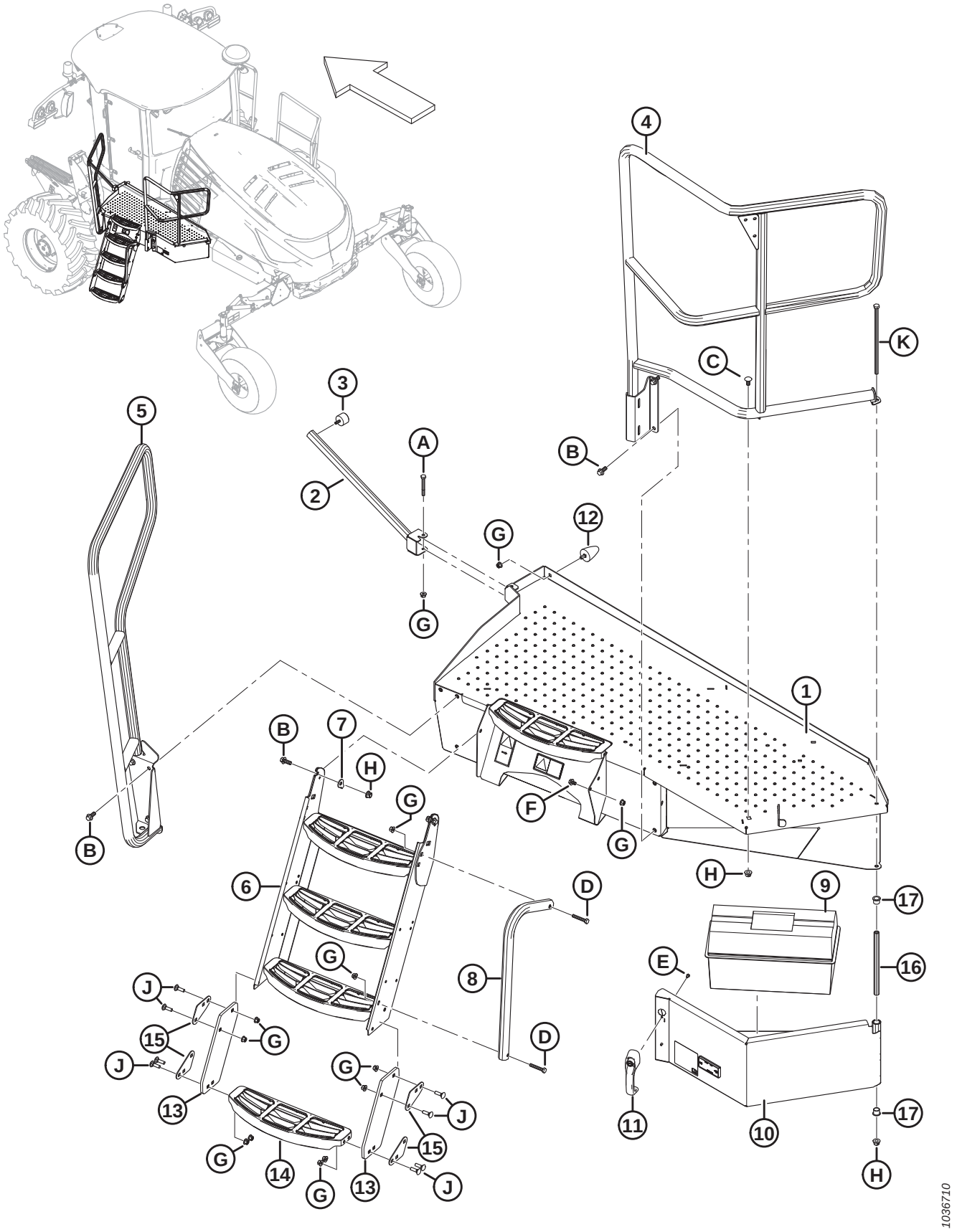

LEFT PLATFORM AND TOOLBOX

Ref	Part Number	Description	Qty	Serial Number
1	306255	LH PLATFORM, BLACK [1]	1	
2	207763	SUPPORT – DOOR STOP WELDT	1	
3	203350	BUMPER – RUBBER	1	
4	310880	RAIL – REAR LH WELDT	1	
5	207761	RAIL – LH FRONT WELDT	1	
6	209904	STEP – 3 RUNG	1	
7	202946	CLIP – LOCK	2	
8	209933	RAIL – STEP	1	
9	279150	KIT – TOOL BOX W/ TRANSITION [2]	1	
10	306579	ASSY – TOOL BOX DOOR [3]	1	
11	206709	HANDLE – DOOR	1	
12	203187	BUMPER – RUBBER	1	
13	291030	MEMBER – FLEXIBLE STEP	2	
14	209932	STEP	1	
15	209719	PLATE – WASHER FLEX STEP	4	
16	139292	TUBE – HINGE	1	
17	207362	BUSHING	2	
A	135657	BOLT – HEX HD M10 X 1.5 X 80-8.8-A3L		
B	148798	BOLT – HEX FLG HD M12 X 1.75 X 30-10.9-A3L		
C	152439	BOLT – RHSSN M12 X 1.75 X 25-8.8-A3L		
D	184664	BOLT – HEX HD M10 X 1.5 X 60-8.8-A3L		
E	136561	BOLT – HEX HD TFL M6 X 1 X 10-8.8-A3L		
F	136151	BOLT – HEX FLG HD TFL M10 X 1.5 X 16-8.8-A3L		
G	135799	NUT – HEX FLG CTR LOC M10 X 1.5-10-A3L		
H	136431	NUT – HEX FLG CTR LOC M12 X 1.75-10-A3L		
J	184662	BOLT – RHSN TFL M10 X 1.5 X 30-8.8-A3L		
K	152192	BOLT – HEX HD M12 X 1.75 X 300 X SPCL-8.8-A3L		

1. Includes decals (MD #166425, 166829).
2. Includes tool box with tray, tool box transition kit, and instructions.
3. Includes decal (MD #207933) and amber reflector (MD #346208).

3 Left Platform Mechanism

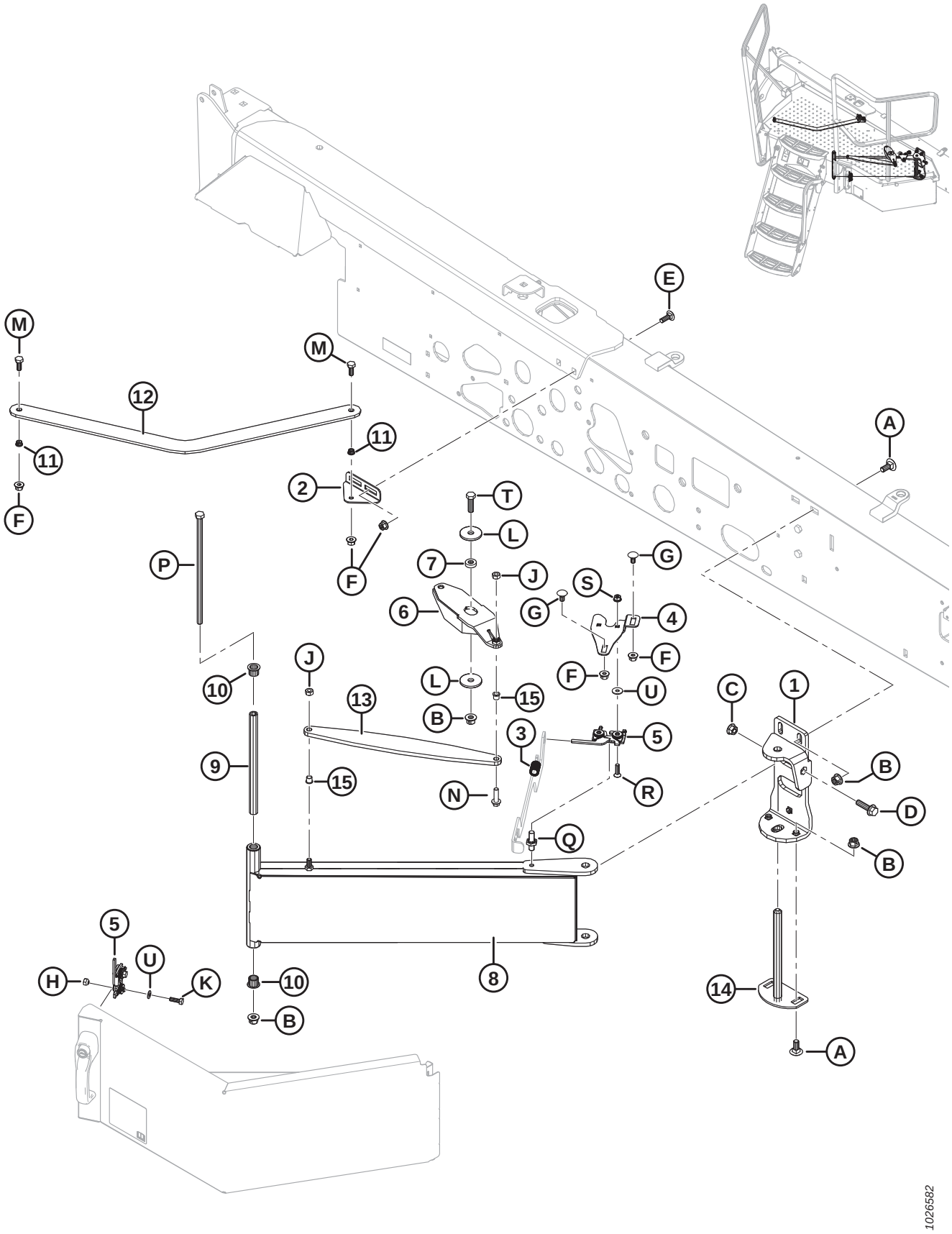

LEFT PLATFORM MECHANISM

Ref	Part Number	Description	Qty	Serial Number
1	208611	BRACKET – HINGE WELDT	1	
2	203211	SUPPORT – PLATFORM ARM	1	
3	19739	SPRING – COMPRESSION	1	
4	203201	SUPPORT – LATCH, PLATFORM	1	
5	134003	ASSY – STIRRUP LATCH	2	
6	291025	ARM – STRIKER, WELDT	1	
7	291215	SPACER – 12.4-13.0 MM I.D., 25.4 MM O.D., 5-5.4 MM LG	1	
8	203192	SUPPORT – PLATFORM, WELDT	1	
9	139292	TUBE – HINGE	1	
10	207362	BUSHING – .75 IN. I.D., .875 IN. O.D., .75 IN. WIDE	2	
11	203213	BUSHING – BRONZE (SHORT)	2	
12	209811	ARM – PLATFORM	1	
13	209650	LINK – PLATFORM	1	
14	110585	PIN – WELDT	1	
15	271208	BUSHING – BRONZE (LONG)	2	
A	184667	BOLT – RHSN M12 X 1.75 X 30-8.8-A3L		
B	136431	NUT – HEX FLG CTR LOC M12 X 1.75-10-A3L		
C	136036	NUT – HEX SMTH FLG M12 X 1.75-8-A3L		
D	148799	BOLT – HEX FLG HD M12 X 1.75 X 45-10.9-A3L		
E	184662	BOLT – RHSN TFL M10 X 1.5 X 30-8.8-A3L		
F	135799	NUT – HEX FLG CTR LOC M10 X 1.5-10-A3L		
G	136178	BOLT – RHSN M10 X 1.5 X 20-8.8-A3L		
H	136417	NUT – HEX SPCL M8 X 1.25		
J	30505	NUT – HEX M10 X 1.5-10-A3L		
K	50140	BOLT – HEX HD M8 X 1.25 X 30-8.8-A2L		
L	11695	WASHER – FLAT, 13.46 MM I.D., 50 MM O.D., 4.5 MM THK		
M	30627	BOLT – HEX HD TFL M10 X 1.5 X 25-8.8-A3L		
N	136211	BOLT – HEX FLG HD M10 X 1.5 X 35-8.8-A3L		
P	152192	BOLT – HEX HD M12 X 1.75 X 300 X SPCL-8.8-A3L		
Q	136598	BOLT – STRIKER		
R	135336	SCREW – CSK MACH FLAT SOC HD M8 X 30 GR 5 ZP		
S	184688	NUT – HEX NYLOC M8 X 1.25-8-A2L		
T	152730	BOLT – HEX HD TFL M12 X 1.75 X 35-10.9-A3L		
U	184709	WASHER – FLAT LARGE M8-200HV-A2L		

4 Right Platform

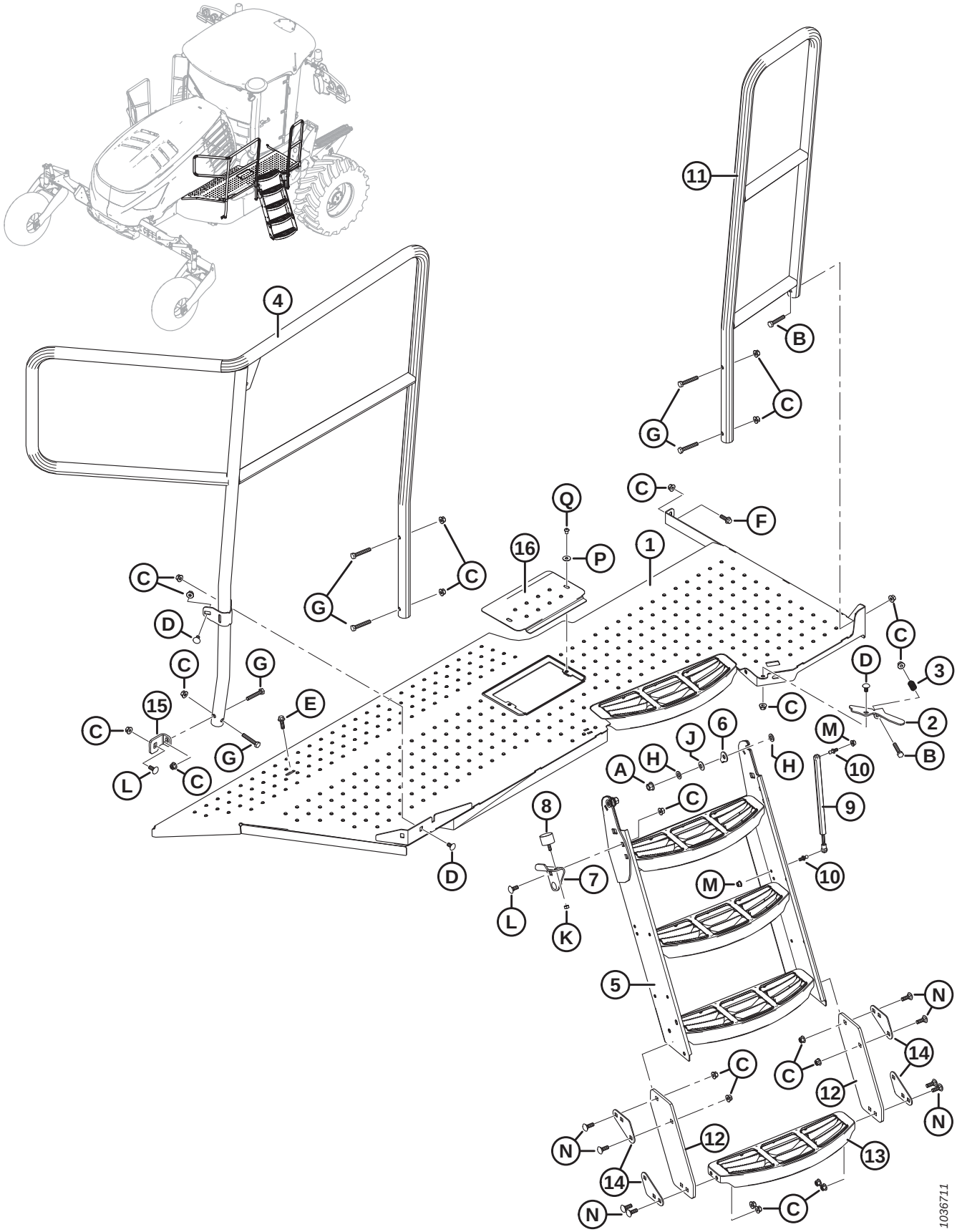

RIGHT PLATFORM

Ref	Part Number	Description	Qty	Serial Number
1	271251	SUPPORT – RH PLATFORM	1	
2	209722	LATCH – STEP	1	
3	35618	SPRING – COMPRESSION	1	
4	310883	RAIL – RH REAR, BLACK	1	
5	209904	STEP – 3 RUNG	1	
6	202946	CLIP – LOCK	2	
7	206434	SUPPORT – BUMPER	1	
8	203350	BUMPER – RUBBER	1	
9	200653	SPRING – GAS	1	
10	136188	STUD – BALL (M10), M8 THREAD	2	
11	207587	RAIL – RH FRONT	1	
12	291030	MEMBER – FLEXIBLE STEP	2	
13	209932	STEP	1	
14	209719	PLATE – WASHER FLEX STEP	4	
15	271094	ANGLE – RAIL MOUNT BOTTOM, BLACK	1	
16	271254	COVER – HATCH, FUEL SENDER, BLACK	1	
A	136431	NUT – HEX FLG CTR LOC M12 X 1.75-10-A3L		
B	152193	BOLT – HEX HD M10 X 1.5 X 55 X 8.8-A3L		
C	135799	NUT – HEX FLG CTR LOC M10 X 1.5-10-A3L		
D	184657	BOLT – RHSSN M10 X 1.5 X 20-8.8-A3L		
E	152655	BOLT – HEX FLG HD M10 X 1.5 X 20-8.8-A3L		
F	184665	BOLT – HEX FLG HD M10 X 1.5 X 30-10.9-A3L		
G	184664	BOLT – HEX HD M10 X 1.5 X 60-8.8-A3L		
H	184714	WASHER – FLAT REG M12-300HV-A3L		
J	184596	WASHER – CON SPRING M12A STL SAE 1050-1075		
K	184687	NUT – HEX M8 X 1.25-8-A2L		
L	135785	BOLT – RHSN M10 X 1.5 X 25-8.8-A3L		
M	135337	NUT – HEX FLG CTR LOC M8 X 1.25-8-A2L		
N	184662	BOLT – RHSN TFL M10 X 1.5 X 30-8.8-A3L		
P	184709	WASHER – FLAT LARGE M8-200HV		
Q	252292	SCREW – HEX SOC BTN HD M8 X 1.25 X 12-10.9-AA1J		

5 Right Support and Tanks

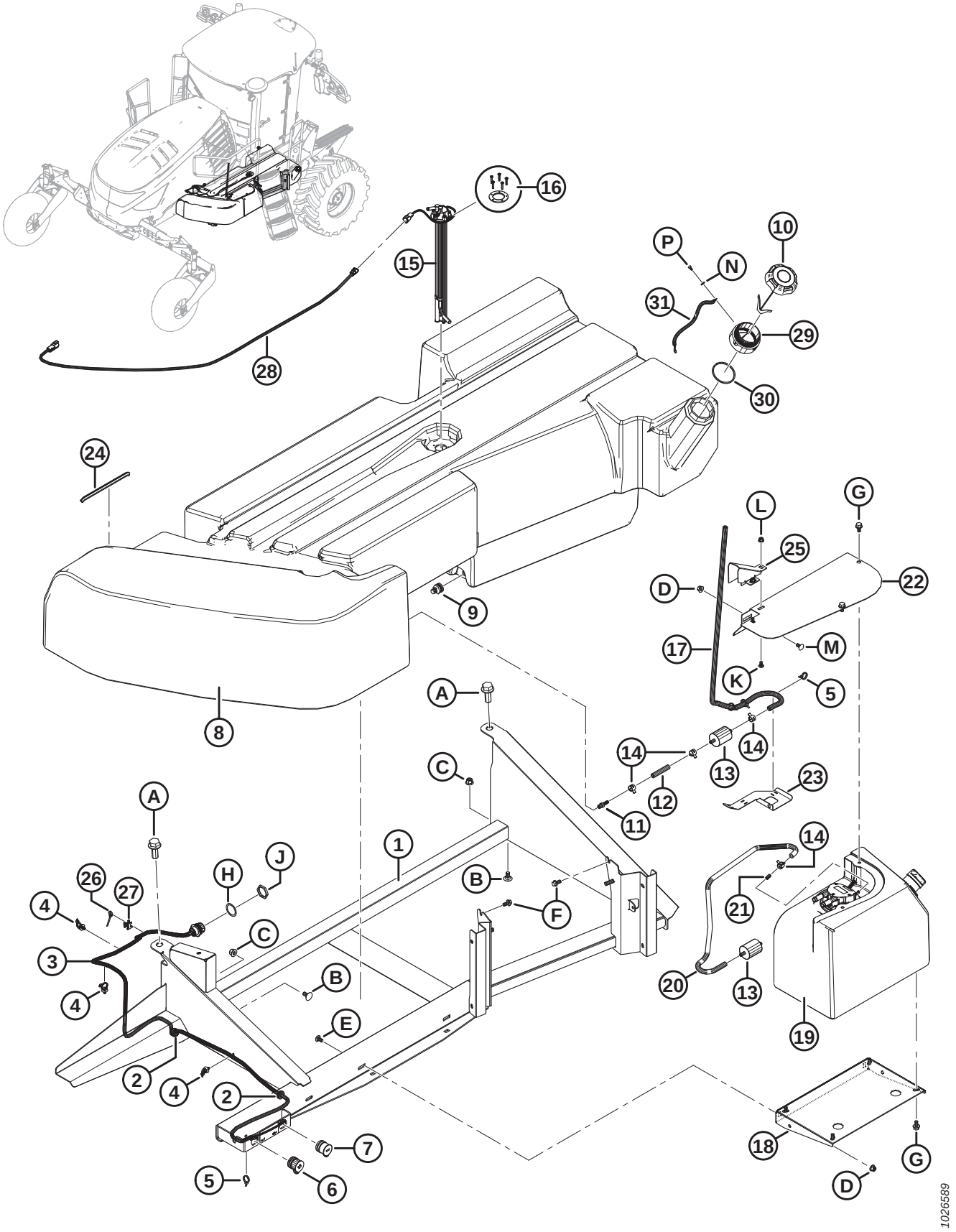

RIGHT SUPPORT AND TANKS

Ref	Part Number	Description	Qty	Serial Number
1	271083	SUPPORT – FUEL TANK, BLACK	1	
2	206482	GROMMET – 15.9 I.D., 22.2 GROOVE, 28.6 O.D.	2	
3	207294	HARNESS – AUXILIARY POWER	1	
4	136655	FASTENER – FIR TREE MOUNT WITH CABLE TIE	3	
5	21763	FASTENER – CABLE TIE, BLACK, 160 MM LG	1	
6	134622	CONNECTOR – AUX. POWER, 3/8 IN. STUD, (+) RED	1	
7	134623	CONNECTOR – AUX. POWER, 3/8 IN. STUD, (–) BLACK	1	
8	200699	ASSEMBLY – FUEL TANK (EXCLUDING FUEL SENDER) [4]	1	
9	204080	FITTING – DRAIN	1	
10	207374	CAP – FUEL TANK	1	
11	21046	FITTING – BARBED 1/4 NPT X 3/8 I.D. HOSE	1	
12	205473	HOSE – FUEL, 76 MM LG ±10	1	
13	111608	FILTER – FUEL STRAINER	2	
14	136743	CLAMP – 16 MM I.D., SPRING TYPE	4	
15	271146	SENDER – FUEL, GROUNDED [5]	1	346190–
	271271	KIT – FUEL SENDER [6]	A/R	–346189
16	207988	KIT – HARDWARE, FUEL SENDER	A/R	
17	209899	HOSE – FUEL VENT, 3/8 IN. I.D., 1190 MM LG	1	
18	207592	SUPPORT – DEF TANK BLACK	1	
19	REF	ASSEMBLY – DEF TANK [7]		
20	204568	HOSE – DEF VENT, 800 MM LG	1	
21	206466	HOSE – DRAIN, 25.4 MM LG, 3/8 IN O.D. 1/4 IN I.D.	1	
22	209681	COVER – DEF LINES	1	
23	209643	GUIDE – VENT HOSE	1	
24	45427	MOULDING – RH (SPEC 31886)	1	
25	209693	COVER – VENT HOSE	1	
26	30753	FASTENER – CABLE TIE, BLACK, 305 MM LG	2	
27	134442	SPACER – DUAL SWIVEL SADDLE	1	
28	271184	HARNESS – FUEL SENDER EXTENSION	1	
29	209833	TUBE – FUEL NECK	1	
30	271238	GASKET – FUEL FILLER EXTENSION	1	
31	310001	CABLE – FUEL FILLER NECK GND	1	
A	136662	BOLT – HEX FLG HD TFL M20 X 50-10.9-A3L ASTM568M		
B	135903	BOLT – RHSN M12 X 1.75 X 25-8.8-A3L		
C	136431	NUT – HEX FLG CTR LOC M12 X 1.75-10-A3L		
D	135799	NUT – HEX FLG CTR LOC M10 X 1.5-10-A3L		
E	184657	BOLT – RHSSN M10 X 1.5 X 20-8.8-A3L		

4. Includes drain fitting (MD #204080), cap (MD #207374), barbed fitting (MD #21046), hose (MD #205473), one filter (MD #111608), and two clamps (MD #136743).
5. Service part for model year 2019 and later windrowers. The fuel sender includes a gasket and five screws.
6. The kit is used to service model year 2018 and prior windrowers. The kit includes fuel sender (MD #271146), fuel sender extension harness (MD #271184), and instructions.
7. For service parts, refer to Section *6 Diesel Exhaust Fluid Tank, page 13*.

RIGHT SUPPORT AND TANKS

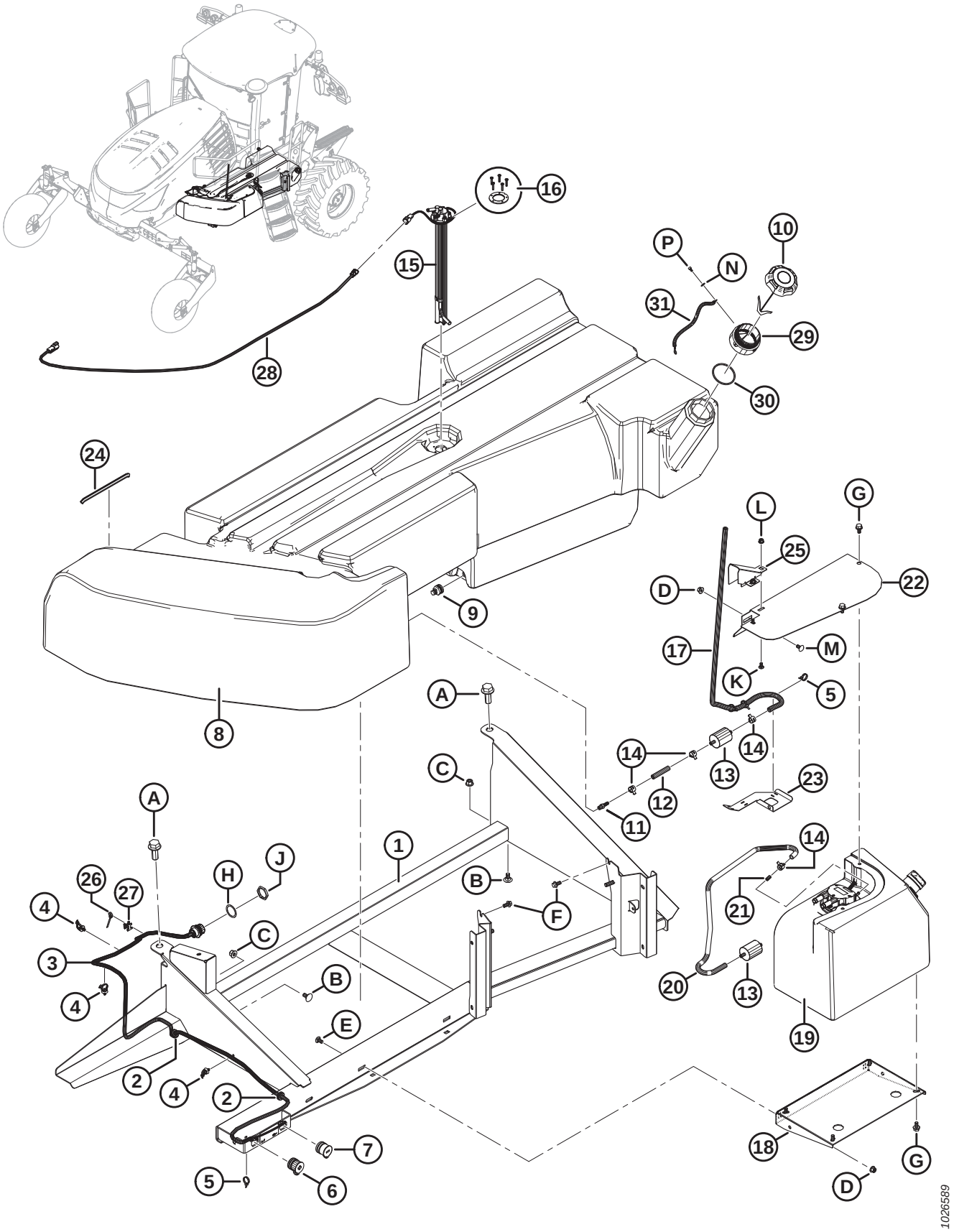

RIGHT SUPPORT AND TANKS

Ref	Part Number	Description	Qty	Serial Number
F	152655	BOLT – HEX FLG HD M10 X 1.5 X 20-8.8-A3L [8]		
G	136496	BOLT – HEX FLG HD TFL M10 X 1.5 X 20-A2-70-SS		
H	134729	WASHER – LOCK, HDP20, SIZE 18		
J	134727	NUT – PANEL, HDP20, SIZE 18		
K	191489	BOLT – RHSSN TFL M8 X 1.25 X 16-8.8-A2L		
L	135337	NUT – HEX FLG CTR LOC M8 X 1.25-8-A2L		
M	136178	BOLT – RHSN M10 X 1.5 X 20-8.8-A3L		
N	184701	WASHER – FLAT LARGE M5-200HV		
P	197224	SCREW – HEX SOC HD TFL M5 X 0.8 X 10-8.8-A2L		

8. Bolts attach to RH platform support (MD #271251).

6 Diesel Exhaust Fluid Tank

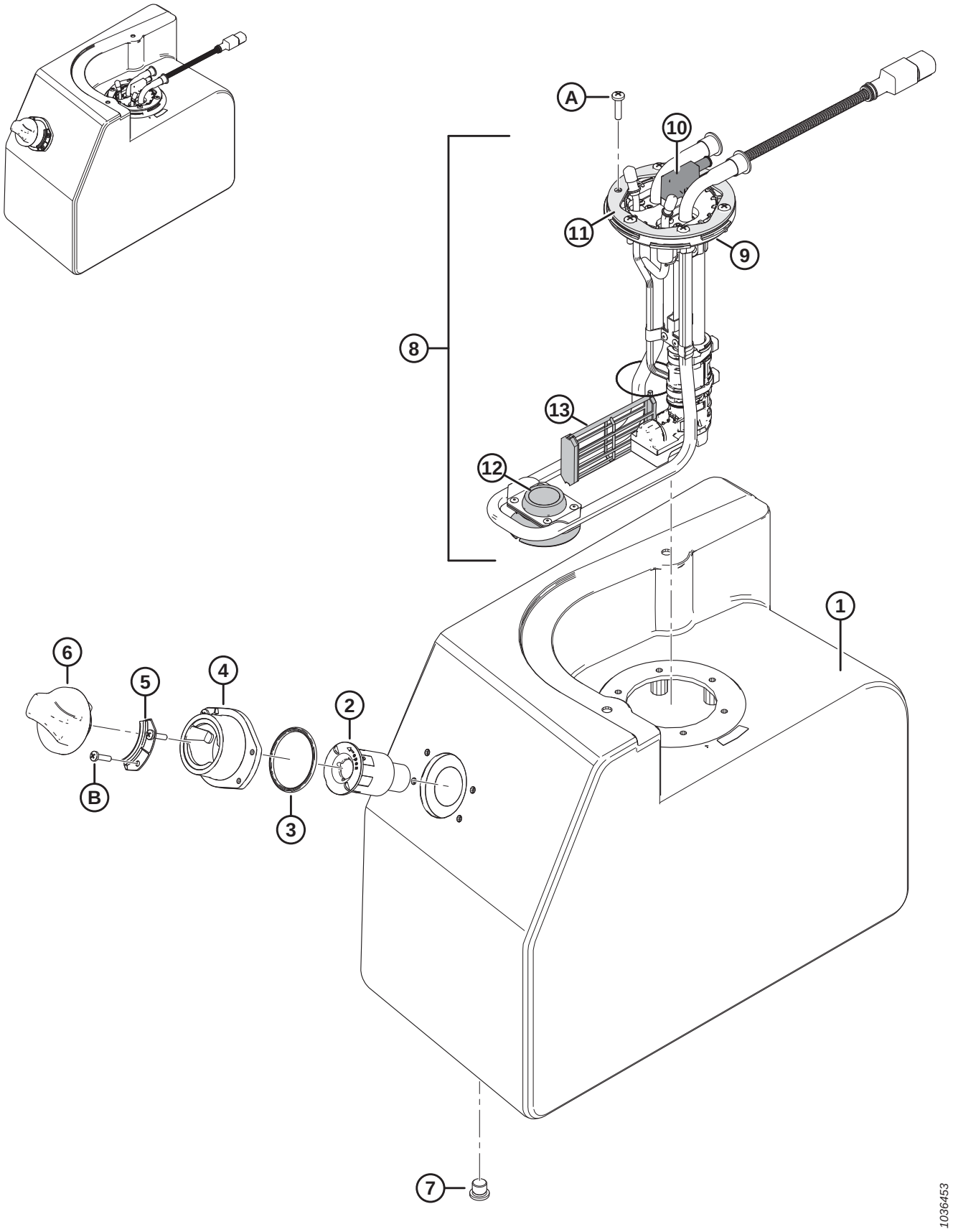

DIESEL EXHAUST FLUID TANK

Ref	Part Number	Description	Qty	Serial Number
	NSS	ASSEMBLY – DEF TANK [9]		
1	208917	TANK – DEF	1	
2	204101	ASSEMBLY – SCREEN, FILL NECK	1	
3	207536	O-RING – DEF TANK FILL NECK, 2.51 IN O.D., 2.19 IN I.D.	1	
4	204094	FILL NECK, LESS CAP	1	
5	207534	RETAINER – DEF CAP TETHER	2	
6	204097	CAP – DEF TANK C/W TEATHER	1	
7	204098	PLUG – DRAIN C/W GASKET	1	
8	207445	ASSEMBLY – DEF HEAD [10]	1	
9	291158	GASKET – DEF HEAD	1	
10	291159	VALVE – AIR VENT VALVE S/A	1	
11	291160	FLANGE – SAE 6 HOLE TANK	1	
12	291161	GROMMET – LARGE, DEF HEAD	1	
13	291162	HOUSING – LIQUID FILTER, S/A [11]	1	
A	136252	SCREW – PAN HD M6 X 1 X 25-4.8-H-SS		
B	252203	SCREW – PAN HD ISO 7045 M5 X 0.8 X 20-SS-PLN		

9. Refer to Section *5 Right Support and Tanks, page 9*.
10. Includes DEF head gasket (MD #291158), air vent valve (MD #291159), flange (MD #291160), grommet (MD #291161), and liquid filter housing (MD #291162).
11. Includes 40 micron filter (NSS), O-ring (NSS), and clip (NSS).

7 Diesel Exhaust Fluid Plumbing

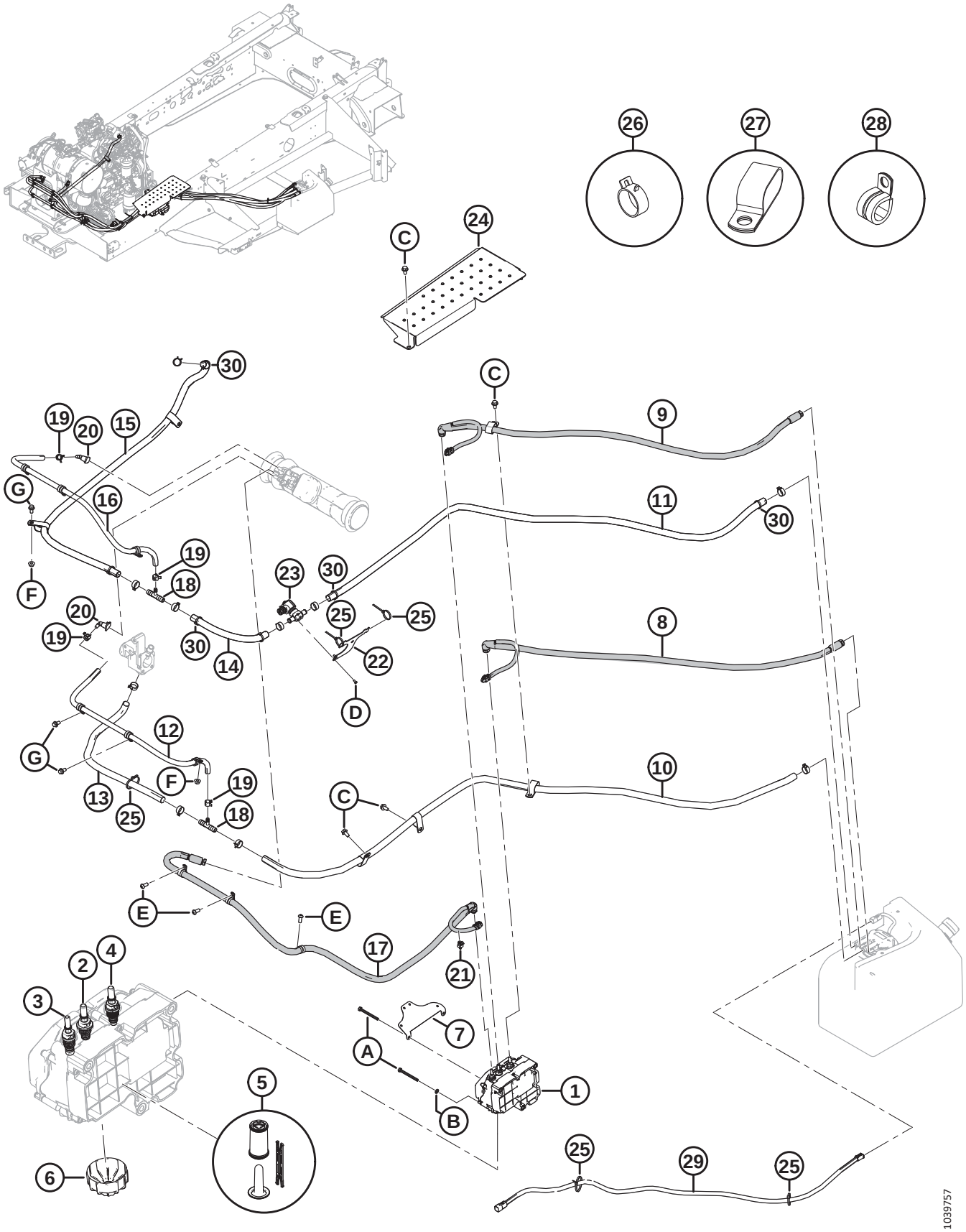

DIESEL EXHAUST FLUID PLUMBING

Ref	Part Number	Description	Qty	Serial Number
1	NSS	MODULE – DEF SUPPLY, CUMMINS [12]		
2	166998	FITTING – CONNECTOR (BACKFLOW)	1	
	207504	GASKET – CIRCULAR (O-RING)		
3	207503	FITTING – CONNECTOR (INLET)	1	
	207504	GASKET – CIRCULAR (O-RING)		
4	207506	FITTING – CONNECTOR (OUTLET)	1	
	207504	GASKET – CIRCULAR (O-RING)		
5	207510	KIT – FILTER, SUPPLY MODULE	1	
6	207511	CAP – FILTER	1	
7	207378	BRACKET – HARNESS	1	
8	208758	HOSE – DEF, SUCTION, 1500 MM LG, SSI	1	
	207961	CLIP – DEF HOSE, 3/8 IN.		
9	208759	HOSE – DEF, BACKFLOW, 1500 MM LG, SSI	1	
	207961	CLIP – DEF HOSE, 3/8 IN.		
	207962	CLIP – DEF HOSE, 5/16 IN.		
10	204025	HOSE – COOLANT, 5/8 IN. I.D., 2280 MM LG	1	
11	203580	HOSE – COOLANT, 5/8 IN. I.D., 1900 MM LG	1	
12	204024	HOSE – COOLANT (3/8 IN. I.D.) SILICONE, 1000 MM LG	1	
13	203578	HOSE – COOLANT, 5/8 IN. I.D., 740 MM LG	1	
14	206611	HOSE – COOLANT, 5/8 IN. I.D., 360 MM LG ±20	1	
15	204018	HOSE – COOLANT, 5/8 IN. I.D., 1600 MM LG	1	
16	203584	HOSE – COOLANT (3/8 IN. I.D.) SILICONE, 1200 MM LG	1	
17	203302	HOSE – DEF, PRESSURE, 2000 MM LG	1	
	207962	CLIP – DEF HOSE, 5/16 IN.		
18	203202	FITTING – TEE, 5/8 TO 3/8 IN., BARBED	2	
19	134758	CLAMP – 19 MM I.D., SPRING TYPE	4	
20	205279	FITTING – SAFE LOCK, 3/8 IN. I.D., 90°	2	
21	136655	FASTENER – FIR TREE MOUNT WITH CABLE TIE	1	
22	209867	BRACKET – VALVE	1	
23	203402	VALVE – SCREW-COOLANT	1	
24	205263	COVER – HOSES	1	
25	21763	FASTENER – CABLE TIE, BLACK, 160 MM LG	5	
26	112692	CLAMP – HOSE [13]	10	
27	50022	CLAMP – INSULATED 15/16 IN. [13]	6	
28	135709	CLAMP – INSULATED 3/4 IN. [13]	9	
29	207904	HARNESS – EXTENSION, DEF TANK	1	
30	**40702**	**FASTENER – CABLE TIE, RED**	**6**	
A	30626	BOLT – HEX HD M8 X 1.25 X 90-8.8-A2L		
B	184708	WASHER – FLAT M8-200HV-A2L		

12. Part serviced through Cummins. Contact your Cummins dealer. Cummins part #4387304.
13. Illustration shows clamp locations.

DIESEL EXHAUST FLUID PLUMBING

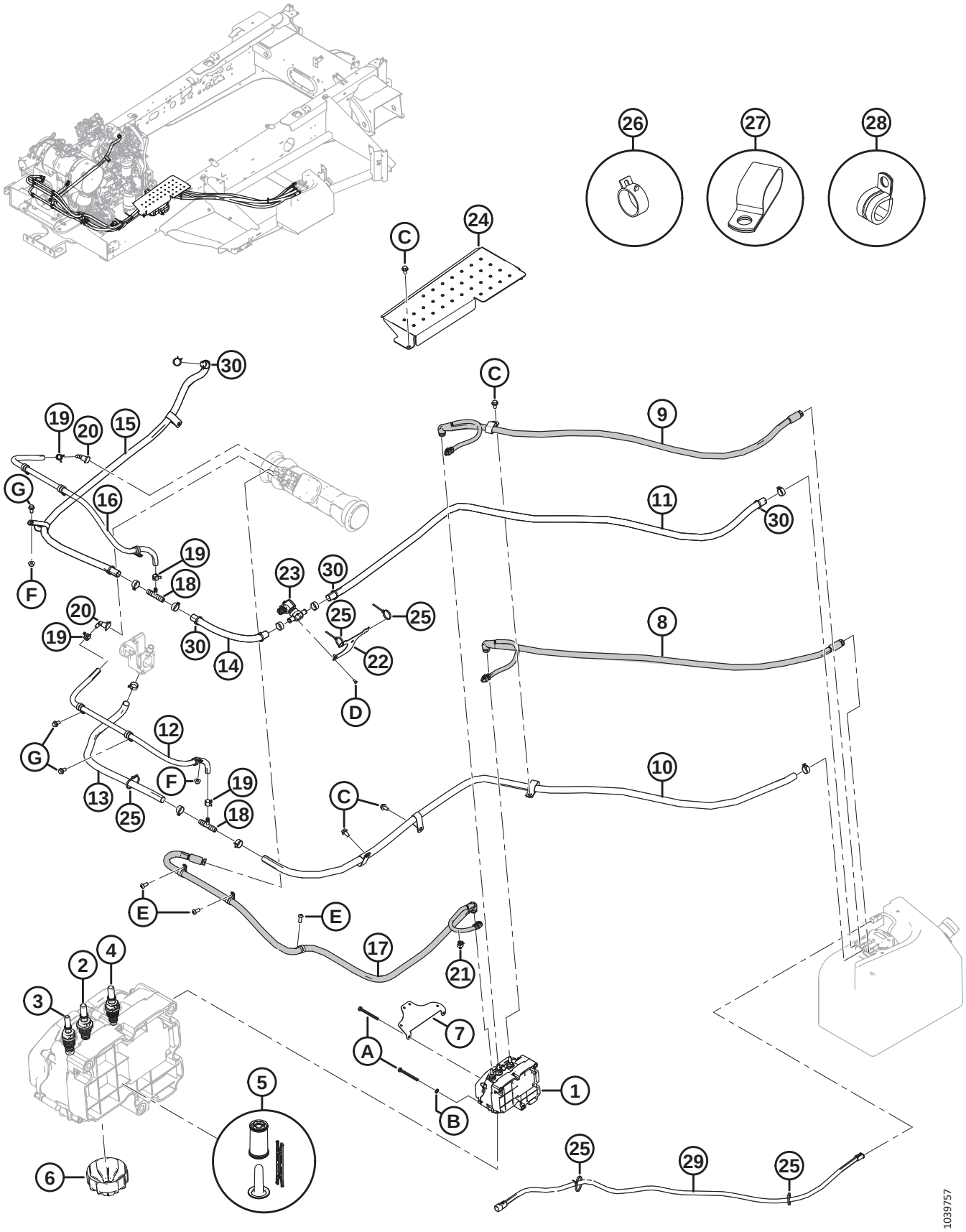

DIESEL EXHAUST FLUID PLUMBING

Ref	Part Number	Description	Qty	Serial Number
C	136209	SCREW – HEX WASHER HD M10 X 1.5 X 20-450HV-A3L		
D	136263	BOLT – HEX HD TFL M5 X 0.8 X 10-8.8-A2L		
E	135852	SCREW – HEX SOC BTN HD M10 X 1.5 X 25-12.9-A3L		
F	135927	NUT – HEX SMTH FLG M10 X 1.5-8-A3L		
G	152655	BOLT – HEX FLG HD M10 X 1.5 X 20-8.8-A3L		

8 Walking Beam

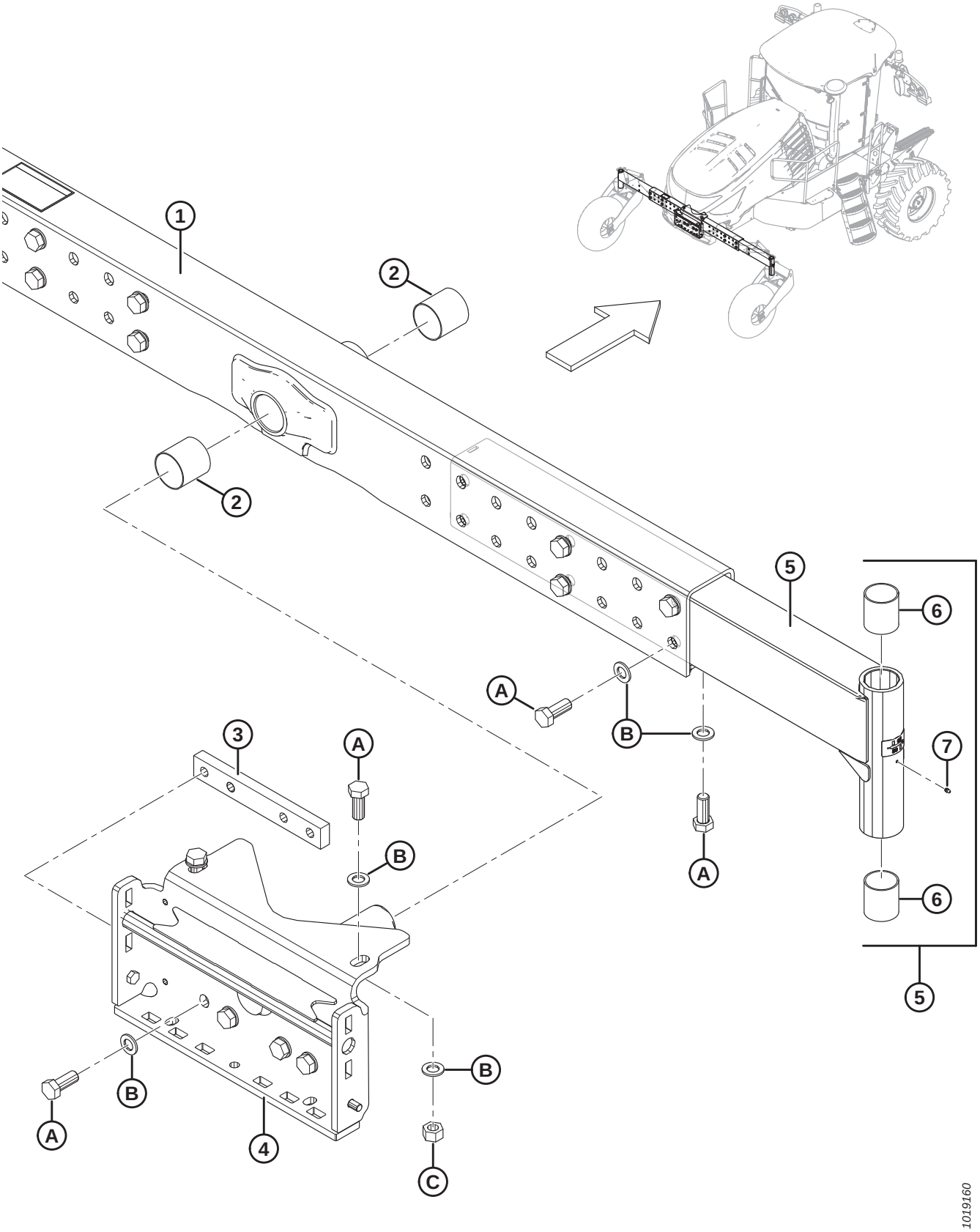

WALKING BEAM

Ref	Part Number	Description	Qty	Serial Number
1	204538	BEAM – CENTER ASSEMBLY [14]	1	
2	291527	BUSHING – 3 IN.	2	
3	204429	BAR – CLAMP	1	
4	207699	PIVOT WELDMENT – BLACK	1	
5	201622	BEAM – LH ASSY BLACK [15]	1	
	201623	BEAM – RH ASSY BLACK [15]	1	
6	202661	BUSHING – SLEEVE	4	
7	18671	FITTING – LUBE 1/4-28 UNF	2	
A	136366	BOLT – HEX HD M24 X 3 X 60-10.9-A3L		
B	136367	WASHER – FLAT REG M24-300HV-A3L		
C	136376	NUT – HEX M24 X 3-10-A3L		

14. Includes two bushings (MD #291527) and decal (MD #207087). Refer to Section *106 Decals – Information and Reflectors, page 243*.
15. Includes lube fitting (MD #18671), two bushings (MD #202661), and decal (MD #23165). Refer to Section *106 Decals – Information and Reflectors, page 243*.

9 Anti-Shimmy

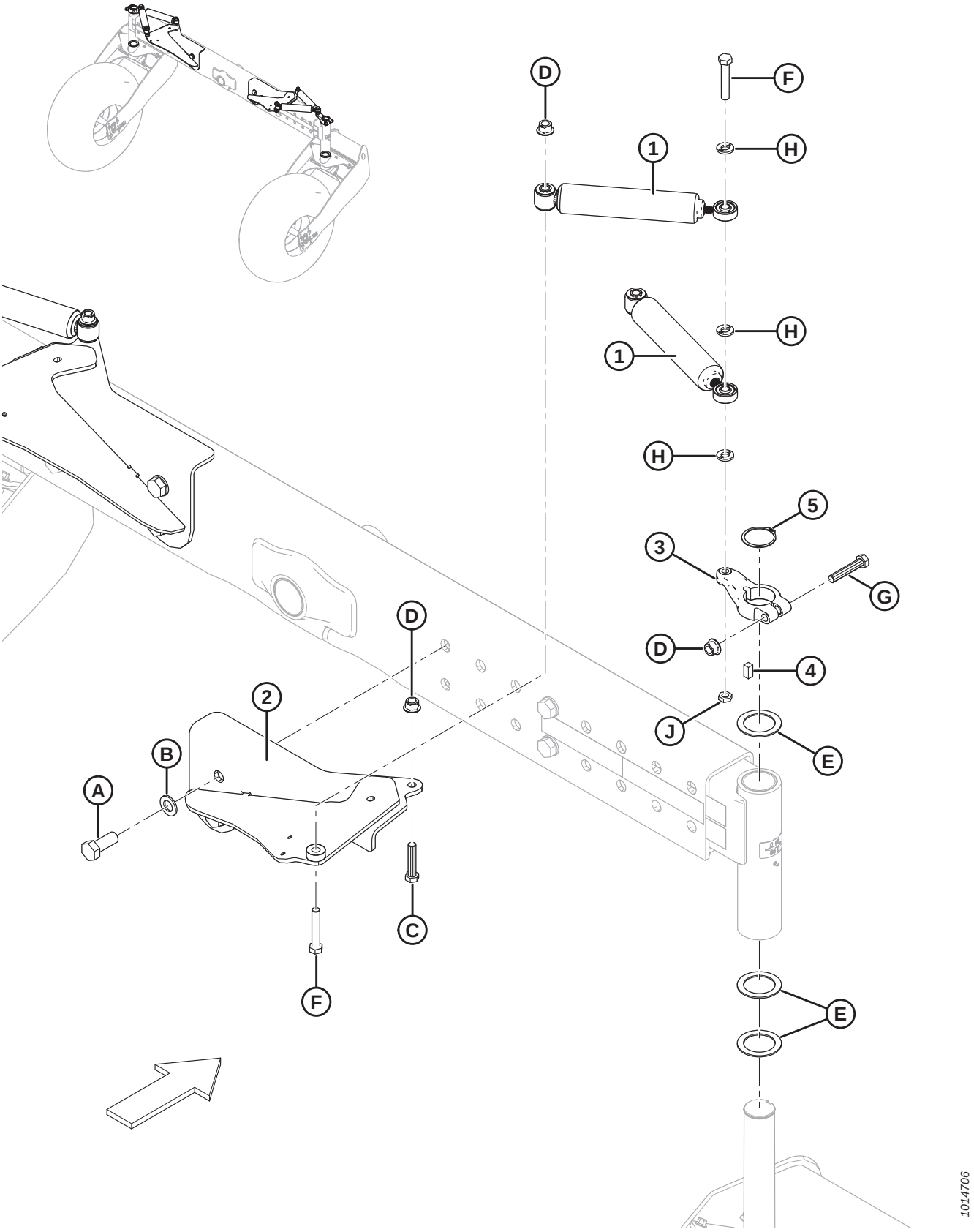

ANTI-SHIMMY

Ref	Part Number	Description	Qty	Serial Number
1	202898	DAMPENER – ANTI-SHIMMY	4	
2	208973	SUPPORT – DUAL SHOCK, LH BLACK	1	
	208979	SUPPORT – DUAL SHOCK, RH BLACK	1	
3	202896	ARM – ANTI-SHIMMY MACHINED	2	
4	135296	KEY	2	
5	30243	RING – EXT RETAINING	2	
A	136366	BOLT – HEX HD M24 X 3 X 60-10.9-A3L		
B	136367	WASHER – FLAT REG M24-300HV-A3L		
C	181511	BOLT – HEX HD M16 X 2 X 75-10.9-A3L		
D	152520	NUT – HEX FLG TECH LOC M16 X 2-10-A3L		
E	110584	WASHER – HARDENED FLAT		
F	252533	BOLT – HEX HD TFL M16 X 2 X 90-10.9-A3L		
G	136455	BOLT – HEX HD M16 X 2 X 85-8.8-A3L		
H	120901	WASHER – FLAT HARDENED 5/8 IN. NOMINAL (L9)		
J	136473	NUT – HEX THIN M16 X 2-05-A3L		

10 Casters – Suspended 16.5-16.1

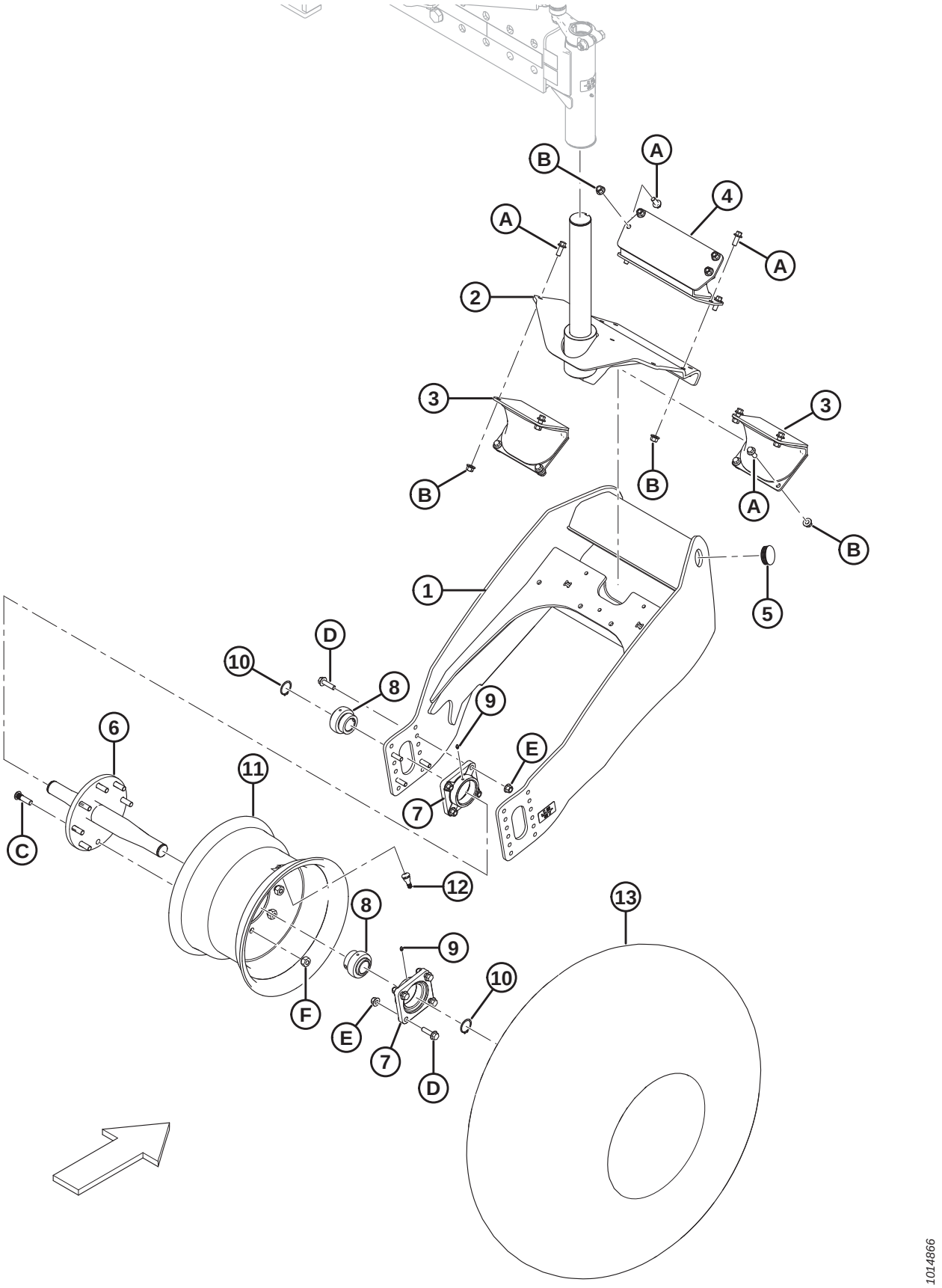

CASTERS – SUSPENDED 16.5-16.1

Ref	Part Number	Description	Qty	Serial Number
	B6016	KIT – CASTERS, SUSPENDED 16.5-16.1 [16]		
1	209712	CASTER FORK WELDMENT	2	
2	207713	NOSE WELDMENT	2	
3	201861	INSULATOR – CASTER, SHORT	4	
4	201836	INSULATOR – CASTER, LONG	2	
5	207783	CAP – 2.25 IN.	4	
6	291192	SHAFT – CASTER, WELDT	2	
7	208686	BEARING FLANGE ASSEMBLY [17]	4	
8	208687	BEARING – BALL, SPHERICAL OD	4	
9	18671	FITTING – LUBE 1/4-28 UNF	4	
10	136385	RING – RETAINING EXTERNAL	4	
11	111216	WHEEL	2	
12	21153	STEM – TIRE VALVE ASSEMBLY #TR-415	2	
13	39273	TIRE	2	
A	148798	BOLT – HEX FLG HD M12 X 1.75 X 30-10.9-A3L		
B	136431	NUT – HEX FLG CTR LOC M12 X 1.75-10-A3L		
C	21357	BOLT – WHEEL (PRESS-IN) 9/16 NF X 53 LG		
D	148799	BOLT – HEX FLG HD M12 X 1.75 X 45-10.9-A3L		
E	136431	NUT – HEX FLG CTR LOC M12 X 1.75-10-A3L		
F	21358	NUT – WHEEL STUD 9/16 NF X 90°		

16. Kits are available through Whole Goods only.
17. Includes ball bearing (MD #208687) and lube fitting (MD #18671).

11 Drive Wheels and Tires – Ten Bolt

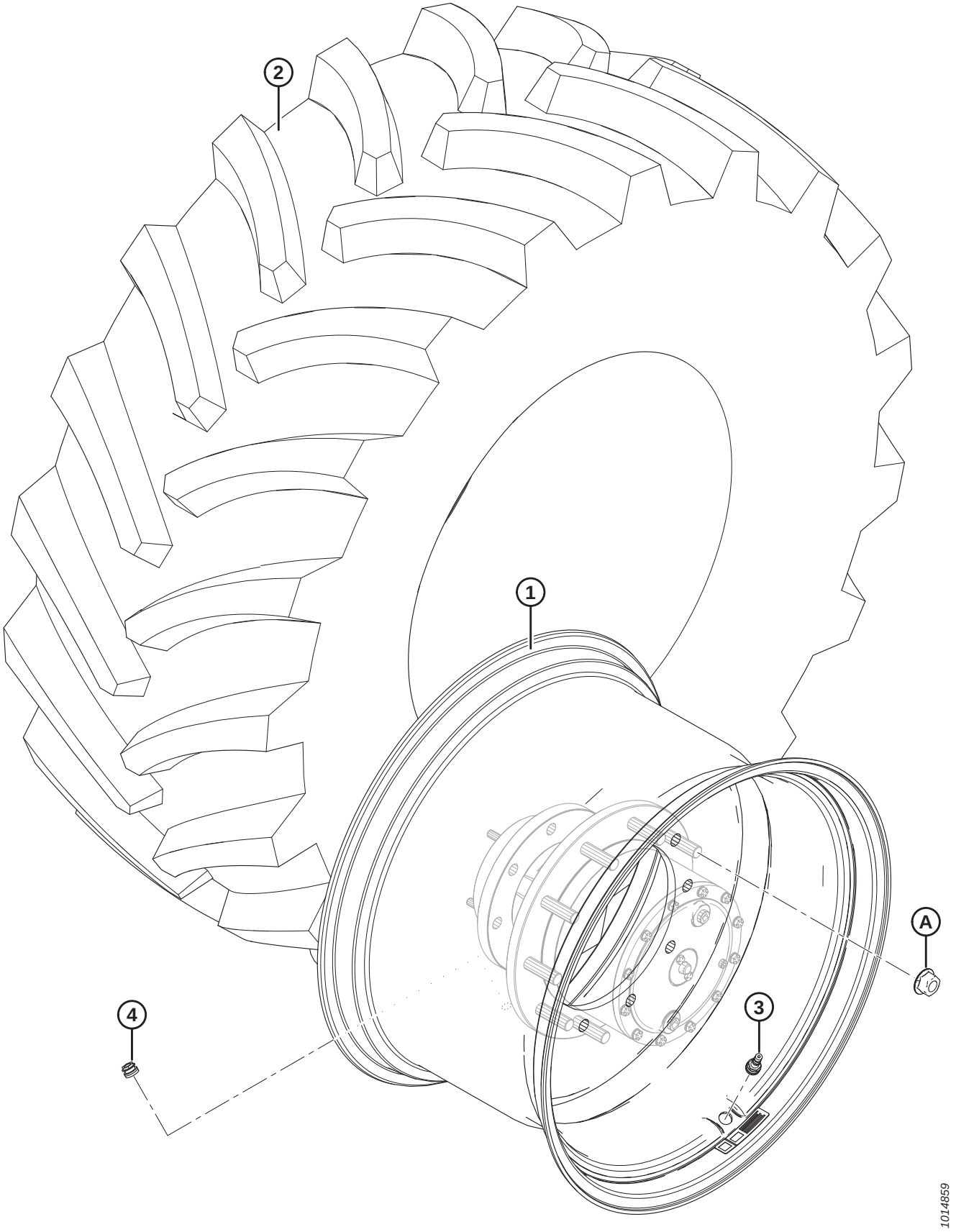

DRIVE WHEELS AND TIRES – TEN BOLT

Ref	Part Number	Description	Qty	Serial Number
	B6012	KIT – DRIVE TIRES, 10 BOLT HUB, BAR 600-65 [18]		
1	207409	WHEEL – 28DW-18 10 BOLT C/W DECALS [19]	2	
2	207406	TIRE – 600-65 R 28, TUBELESS, R1W 160 LR	2	
3	112475	STEM – VALVE	2	
	B6013	KIT – DRIVE TIRES, 10 BOLT HUB, TURF 580/70R26 [18]		
1	205009	WHEEL – 26DW-20L 10 BOLT C/W DECALS [19]	2	
2	207410	TIRE – 580/70R26 155 A8/B ALL WEATHER TL	2	
3	112475	STEM – VALVE	2	
4	162436	PLUG – WHEEL	2	
A	205397	NUT – WHEEL DIN 74361N M20 X 1.5 X GR 10.9		

18. Kits are available through Whole Goods only.
19. Includes decals (MD #111221, 166454, 166727, and 291411).

12 Drive Wheels and Tires – Twelve Bolt

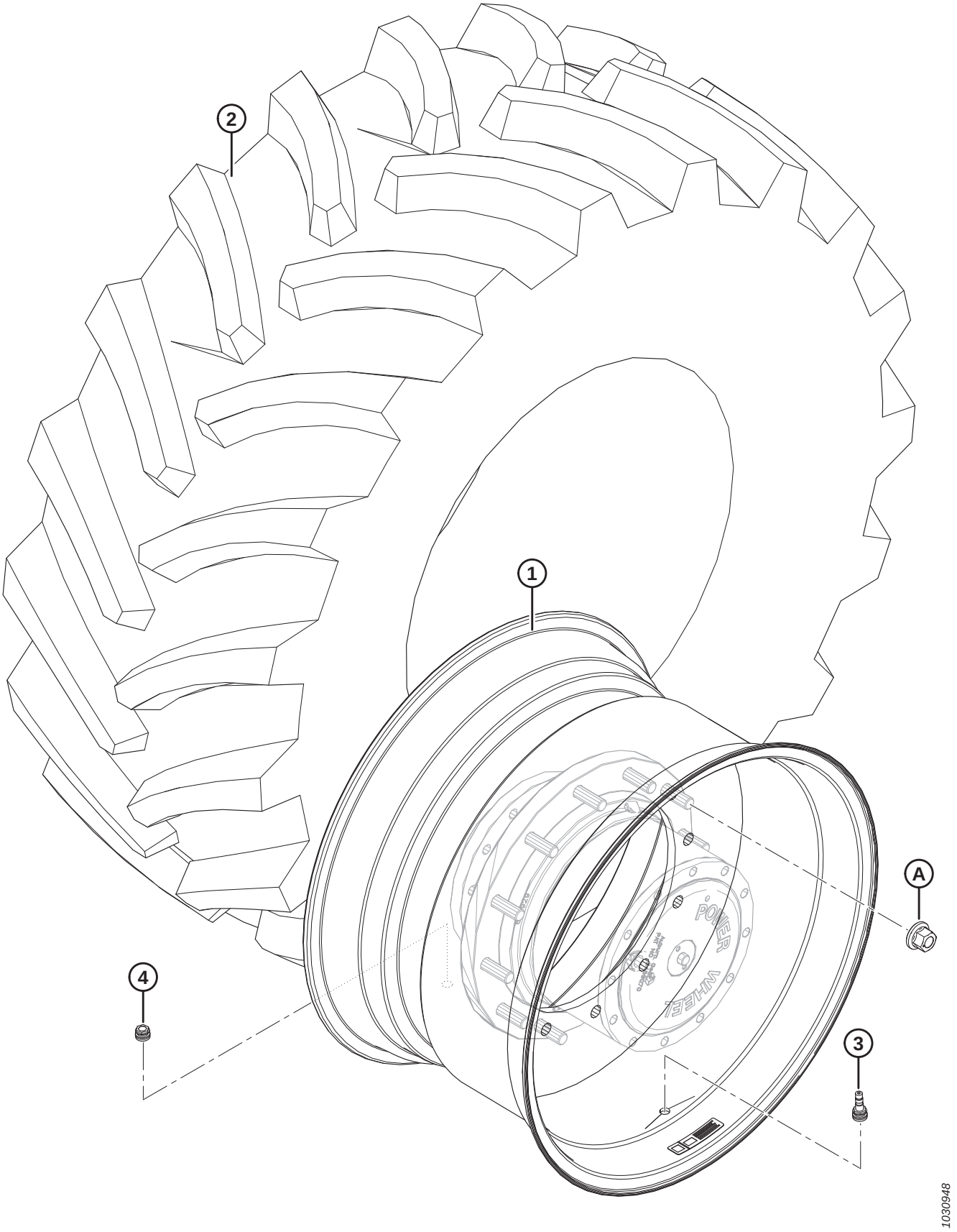

DRIVE WHEELS AND TIRES – TWELVE BOLT

Ref	Part Number	Description	Qty	Serial Number
	B6834	KIT – HD DRIVE TIRES, 12 BOLT HUB, BAR 600-65, MD [20]		
1	310556	ASSY – WHEEL AND DECALS, MD [21]	2	
2	207406	TIRE – 600-65 R 28, R1W 160 LR	2	
3	112475	STEM – VALVE	2	
4	162436	PLUG – WHEEL	2	
A	205397	NUT – WHEEL DIN 74361N M20 X 1.5 X GR 10.9		

20. Kits are available through Whole Goods only.
21. Includes plug (MD #162436) and decals (MD #111221, 166454, 310689, and 291411).

13 Lift Linkage

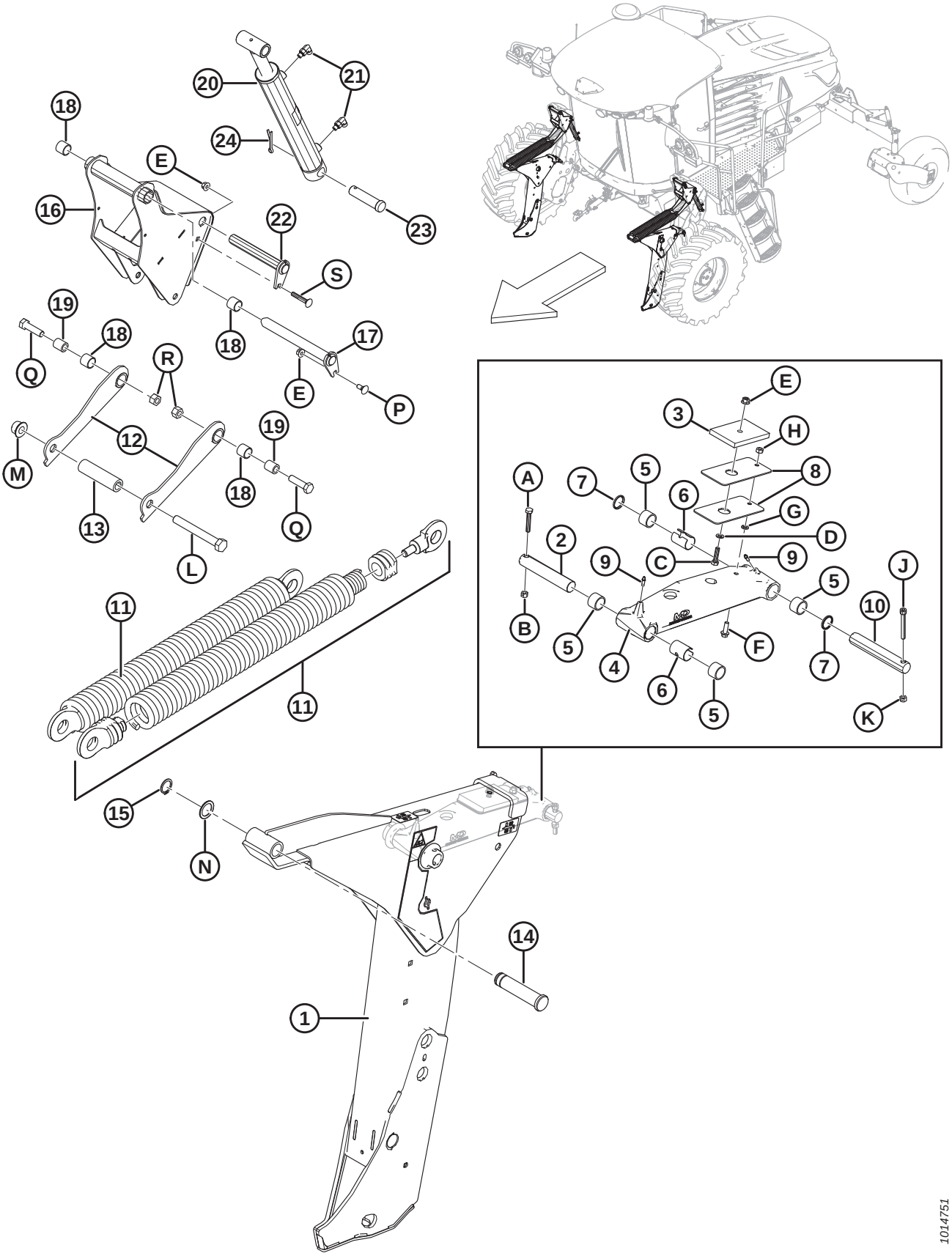

LIFT LINKAGE

Ref	Part Number	Description	Qty	Serial Number
1	306192	LIFT ARM – LH C/W DECALS [22]	1	
	306193	LIFT ARM – RH C/W DECALS [23]	1	
2	183820	PIN – FLOAT LINK	2	
3	42497	PAD – RUBBER	2	
4	112727	ARM – FLOAT LINK ASSEMBLY [24]	2	
5	112789	BEARING – NEEDLE	8	
6	163310	SPACER – SHORT	4	
7	139134	SEAL – 1.25 IN. I.D. X 1.5 IN. O.D. X 0.125 IN.	4	
8	110853	SHIM – LINKAGE	4	
9	7536	FITTING – LUBRICATION 1/4-28 TAPER THD	4	
10	183821	PIN – STRAIGHT	2	
11	306106	ASSEMBLY – SPRING	4	
12	205937	ARM – SPRING LINK WELDT	4	
13	112916	TUBE – PIVOT	2	
14	206038	PIN – CLEVIS	2	
15	136832	RING – EXT RETAINING HEAVY DUTY	2	
16	205979	LEVER – FLOAT TENSIONER WELDT	2	
17	205936	PIN – PIVOT WELDT	2	
18	133992	BUSHING – COMPOSITE	8	
19	205974	SPACER	4	
20	208664	CYLINDER – FLOAT ADJUST	2	
	208118	SEAL KIT – CYL. FLOAT ADJUST		
21	136447	FITTING – ELBOW 90° HYD	4	
	50223	O-RING – #4 ORB		
	135957	O-RING – #4 ORFS		
22	205939	PIN – FLOAT WELDT	2	
23	158635	PIN – CLEVIS	2	
24	18609	PIN – COTTER 1/4 DIA X 2 ZP	2	
A	184664	BOLT – HEX HD M10 X 1.5 X 60-8.8-A3L		
B	135800	NUT – HEX CTR LOC SPCL M10 X 1.5-9-A3L		
C	135319	BOLT – HEX HD M10 X 1.5 X 40-8.8-A3L		
D	184711	WASHER – FLAT REG M10-200HV-A3L		
E	135799	NUT – HEX FLG CTR LOC M10 X 1.5-10-A3L		
F	184665	BOLT – HEX FLG HD M10 X 1.5 X 30-10.9-A3L		
G	30632	WASHER – LOCK SPRING M10-200HV-A3L		
H	30505	NUT – HEX M10 X 1.5-10-A3L		
J	136108	SCREW – HEX SOC HD M10 X 1.5 X 80-12.9-BO		
K	135800	NUT – HEX CTR LOC SPCL M10 X 1.5-9-A3L		
L	136422	BOLT – HEX HD M20 X 2.5 X 160-8.8-A3L		
M	136122	NUT – HEX FLG CTR LOC M20 X 2.5-10-A3L		
N	123071	WASHER – FLAT		

22. Includes decals (MD #23165, 306179, and 306181).
23. Includes decals (MD #23165, 306180, and 306181).
24. Includes four bearings (MD #112789), two spacers (MD #163310), and two seals (MD #139134).

LIFT LINKAGE

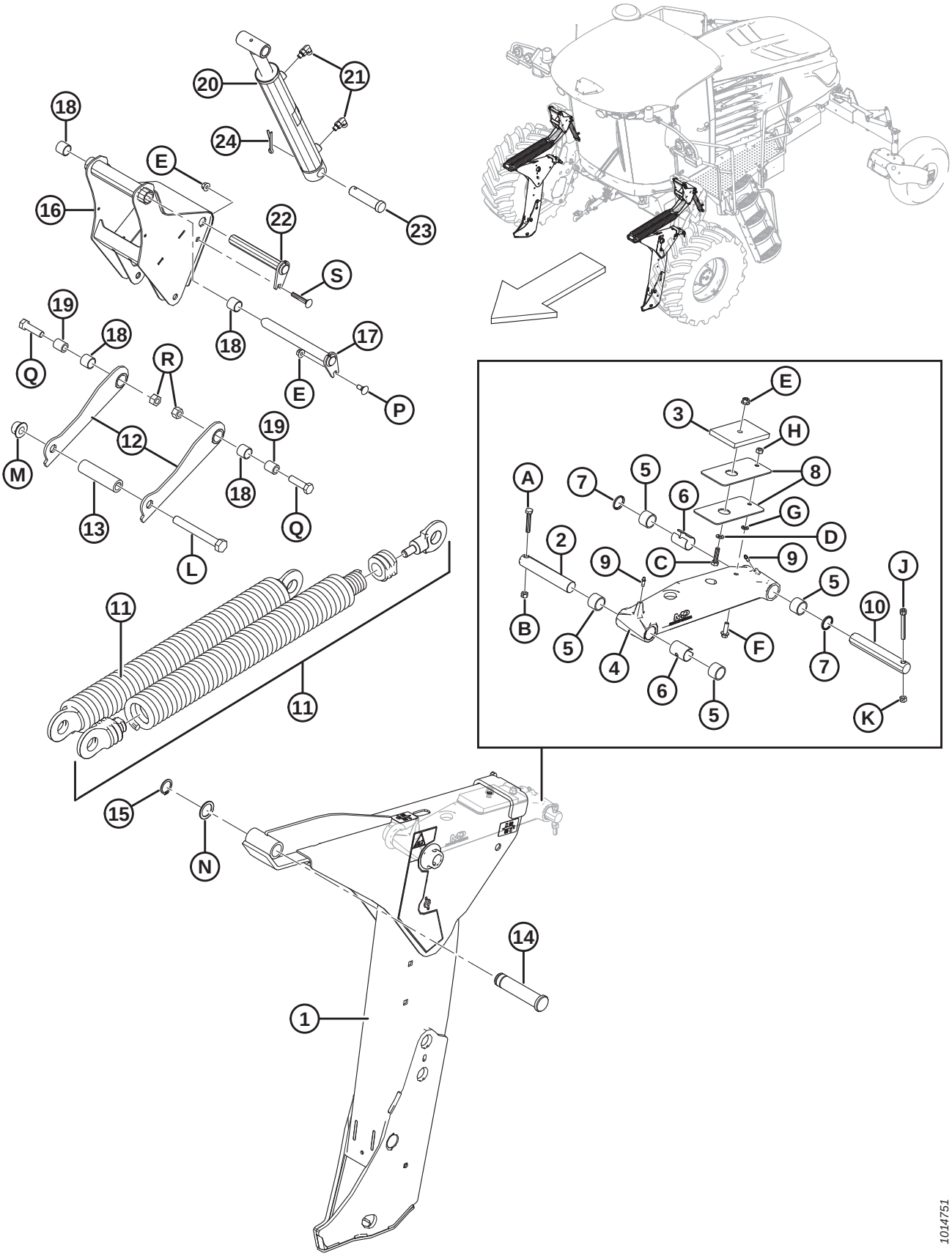

LIFT LINKAGE

Ref	Part Number	Description	Qty	Serial Number
P	136209	BOLT – RHSN M10 X 1.5 X 25-8.8-A3L		
Q	136141	BOLT – HEX HD M16 X 2 X 60-8.8-A3L		
R	136476	NUT – HEX CTR LOC M16 X 2-8-A3L		
S	136113	BOLT – RHSN M10 X 1.5 X 60-8.8-A3L		

14 Lift Linkage Cylinders

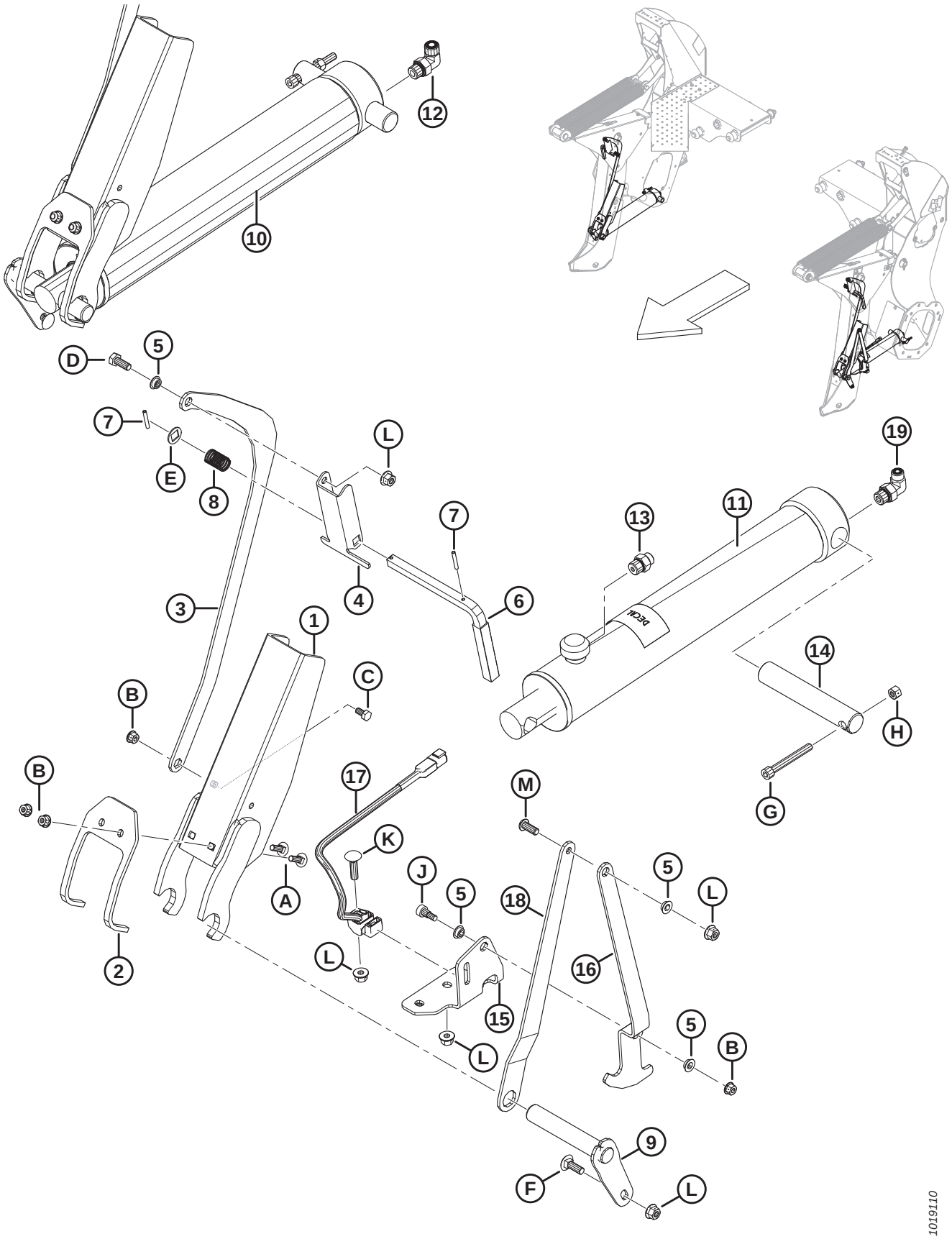

LIFT LINKAGE CYLINDERS

Ref	Part Number	Description	Qty	Serial Number
1	208019	LOCK – CYLINDER STOP WELDMENT	2	
2	208020	RETAINER – CYLINDER STOP	2	
3	206160	ARM – LOCKUP LINK	2	
4	206324	CHANNEL – LOCK RELEASE, M10	2	
5	206340	BUSHING – SHOULDER, M10	4	
6	183543	ASSEMBLY – SHAFT WITH HANDLE GRIP	2	
7	13617	PIN – SPRING 3/16 DIA X 1.25 LG	4	
8	19739	SPRING – COMPRESSION	2	
9	206258	PIN – WELDMENT	2	
10	209789	CYLINDER – LIFT, MASTER	1	
	141184	KIT – LIFT CYL SEALS, MASTER [25]		
11	209790	CYLINDER – LIFT, SLAVE	1	
	141185	KIT – LIFT CYL SEALS, SLAVE [25]		
12	136220	FITTING – ELBOW 90° HYD	1	
	44209	O-RING – #8 ORB		
	135866	O-RING – #8 ORFS		
13	191705	FITTING – ADAPTER 6 MORFS X 8 MORB	2	
	44209	O-RING – #8 ORB		
	135865	O-RING – #6 ORFS		
14	206350	PIN – STRAIGHT	2	
15	209388	SUPPORT – HEIGHT SENSOR	1	
16	209389	ARM – HEIGHT SENSOR PROFILE	1	
17	206661	SENSOR – ANALOG HALL EFFECT	1	
18	209393	ARM – HEIGHT SENSOR	1	
19	136149	FITTING – ELBOW 90° HYD C/W O-RING	1	
	44209	O-RING – #8 ORB		
	135865	O-RING – #6 ORFS		
A	184648	BOLT – RHSN M8 X 1.25 X 25-8.8-A3L		
B	135337	NUT – HEX FLG CTR LOC M8 X 1.25-8-A2L		
C	50139	BOLT – HEX HD TFL M8 X 1.25 X 16-8.8-A2L		
D	30627	BOLT – HEX HD TFL M10 X 1.5 X 25-8.8-A3L		
E	163373	WASHER – FLAT RD (SQ. BORE)		
F	184662	BOLT – RHSN TFL M10 X 1.5 X 30-8.8-A3L		
G	136108	SCREW – HEX SOC HD M10 X 1.5 X 80-12.9-BO		
H	135800	NUT – HEX CTR LOC SPCL M10 X 1.5-9-A3L		
J	135894	SCREW – HEX SOC HD SHLDR 10 X 10-12.9-A2L		
K	152732	BOLT – RHSN M10 X 1.5 X 40-8.8-A3L		
L	135799	NUT – HEX FLG CTR LOC M10 X 1.5-10-A3L		
M	135852	SCREW – HEX SOC BTN HD M10 X 1.5 X 25-12.9-A3L		

25. Includes seal kit and instructions.

15 Float Sensors

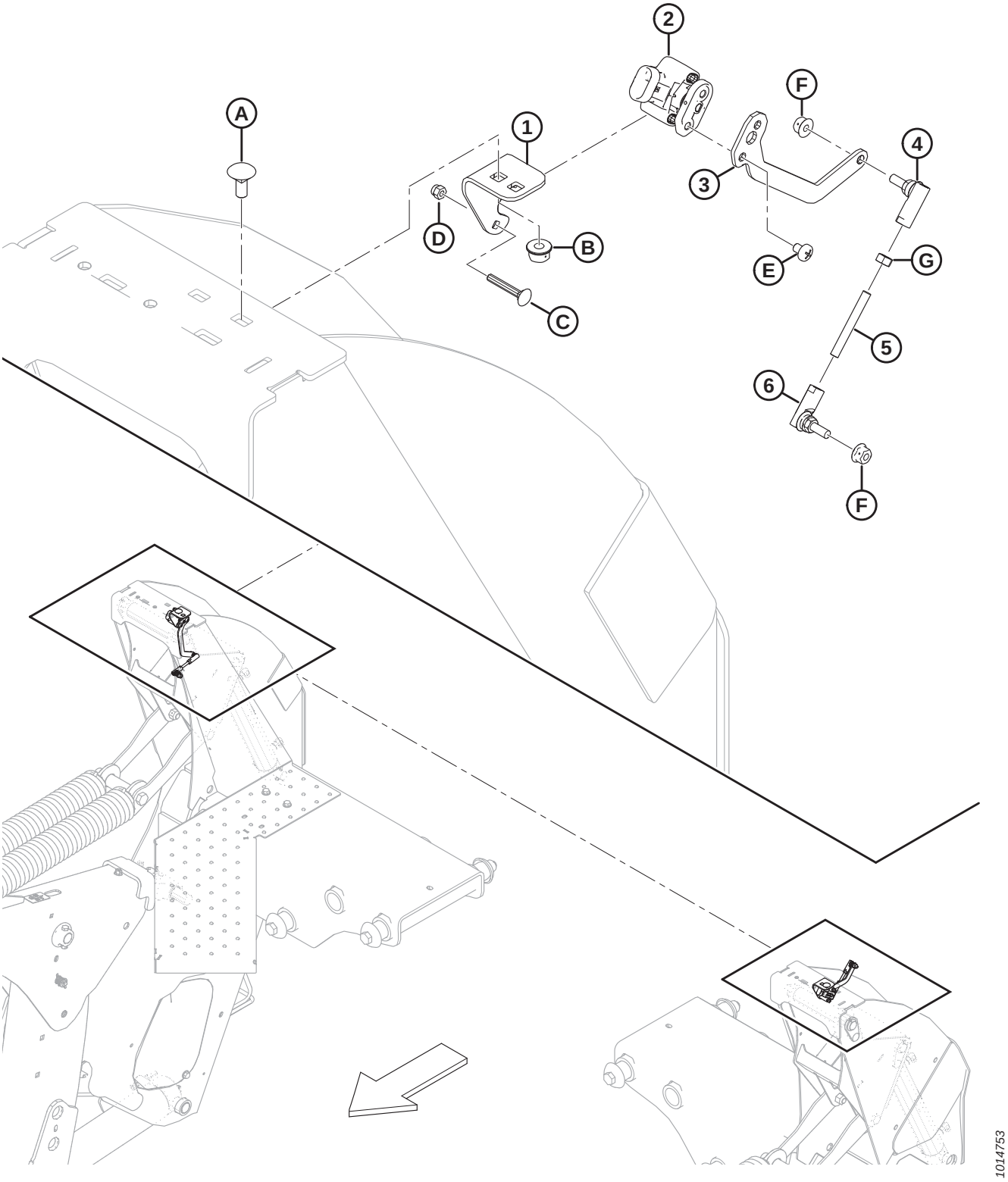

FLOAT SENSORS

Ref	Part Number	Description	Qty	Serial Number
1	207646	SUPPORT – SENSOR MOUNT	2	
2	248643	ROTARY SENSOR – DUAL OUTPUT	2	
3	207219	ARM – FLOAT SENSOR	2	
4	291484	BALL JOINT – RH THREAD	2	
5	232659	ROD – THREADED	2	
6	291485	BALL JOINT – LH THREAD	2	
A	197171	BOLT – RHSN M8 X 1.25 X 20-8.8-A2L		
B	135337	NUT – HEX FLG CTR LOC M8 X 1.25-8-A2L		
C	197229	BOLT – RHSN M5 X 0.8 X 35-4.6-A2L		
D	197230	NUT – HEX NYLOC M5 X 0.8-8-A2L		
E	158704	SCREW – PAN HD M6 X 1 X 8-4.8-A2L		
F	152668	NUT – HEX FLG CTR LOC M6 X 1-8-A2L		
G	184683	NUT – HEX ISO 4032 M6 X 1-8-A2L		

16 Center-Link

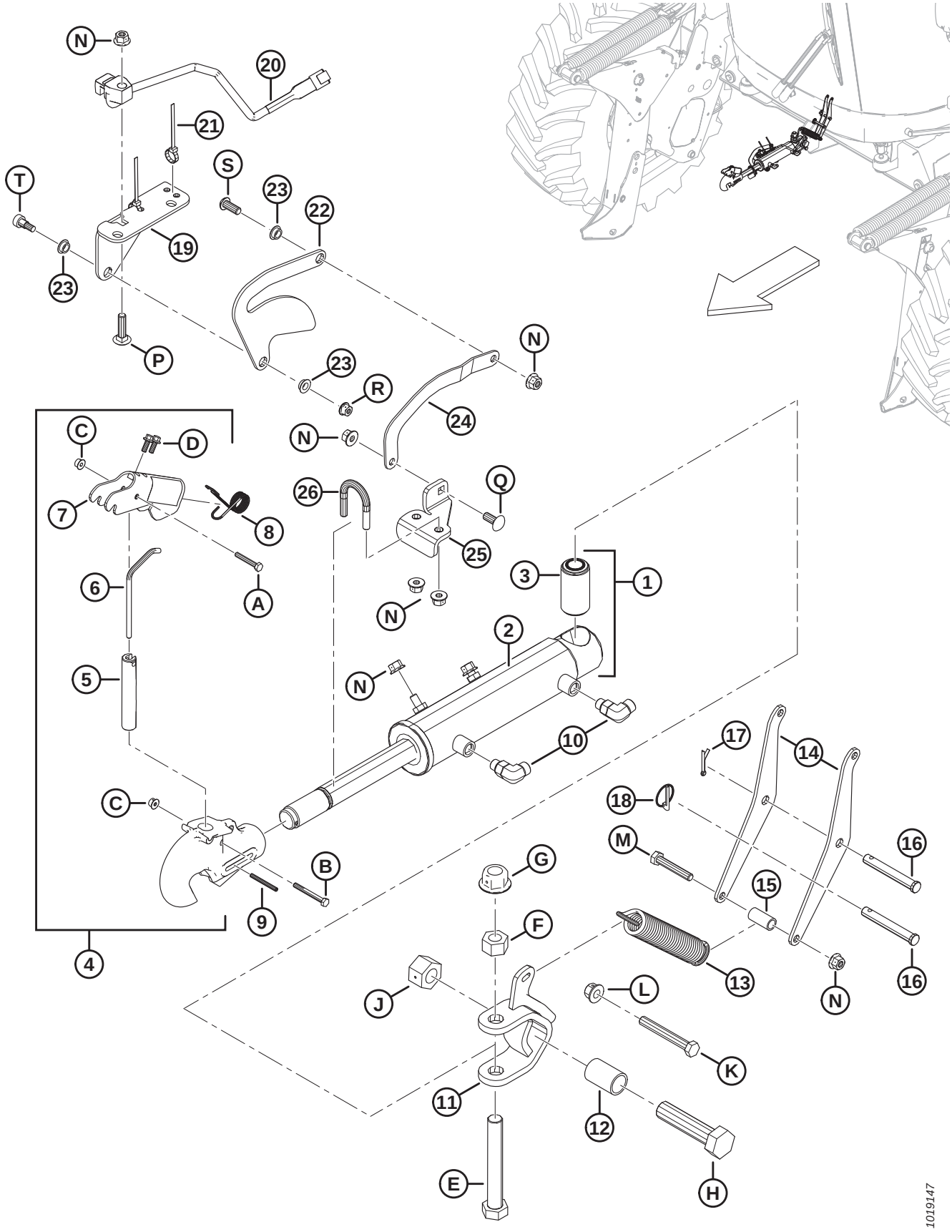

CENTER-LINK

Ref	Part Number	Description	Qty	Serial Number
1	206550	CENTER-LINK CYLINDER [26]	1	
2	208667	CYLINDER – CENTER-LINK	1	
	112625	SEAL KIT		
3	206548	BUSHING – RUBBER	1	
4	206560	HOOK – TOP LINK, ASSEMBLY [27]	1	
5	156848	PIN – LOCK	1	
6	156886	ROD – ACTUATOR	1	
7	139724	LATCH – HANDLE W/ DECAL [28]	1	
8	206559	SPRING – LATCH ASSEMBLY	1	
9	135453	PIN – SPRING 3/16 DIA X 1-7/8 LG	1	
10	136095	FITTING – ELBOW 90° HYD	2	
	50219	O-RING – #6 ORB		
	135865	O-RING – #6 ORFS		
11	209979	CLEVIS – WELDT	1	
12	110971	SPACER – 1.25 O.D. X 1.0 I.D.	1	
13	9423	SPRING – EXTENSION	1	
14	203817	LEVER – SPRING LIFT	2	
15	17675	SPACER	1	
16	101007	PIN – CLEVIS	2	
17	18648	PIN – COTTER 3/16 DIA X 1.25 ZP	1	
18	50193	PIN – LYNCH	1	
19	306423	SUPPORT – TILT SENSOR	1	
20	206661	SENSOR – ANALOG HALL EFFECT	1	
21	21763	FASTENER – CABLE TIE, BLACK, 160 MM LG	2	
22	209410	ARM – TILT SENSOR PROFILE	1	
23	206340	BUSHING – SHOULDER, M10	3	
24	209865	ARM – TILT SENSOR	1	
25	306426	SUPPORT	1	
26	206562	U-BOLT	1	
A	135671	BOLT – HEX HD TFL M6 X 1 X 40-8.8-A2L		
B	136595	BOLT – HEX HD M6 X 1 X 55-8.8-A2L		
C	152668	NUT – HEX FLG CTR LOC M6 X 1-8-A2L		
D	135959	BOLT – HEX FLG HD M6 X 1 X 16-10.9-A2L		
E	136420	BOLT – HEX HD M20 X 2.5 X 140-8.8-A3L		
F	136124	NUT – HEX M20 X 2.5-10-A3L		
G	136122	NUT – HEX FLG CTR LOC M20 X 2.5-10-A3L		
H	136847	BOLT – HEX HD M24 X 3 X 100-10.9-A3L		
J	136848	NUT – HEX CTR LOC M24 X 3-10-A3L		
K	184673	BOLT – HEX HD M12 X 1.75 X 90-10.9-A3L		
L	136431	NUT – HEX FLG CTR LOC M12 X 1.75-10-A3L		

26. Includes cylinder (MD #208667) and rubber bushing (MD #206548).
27. Includes pin (MD #156848), rod (MD #156886), latch (MD #139724), spring assembly (MD #206559), bolts (MD #135671, 136595, 135959), and nut (MD #152668).
28. Includes decal (MD #139723).

CENTER-LINK

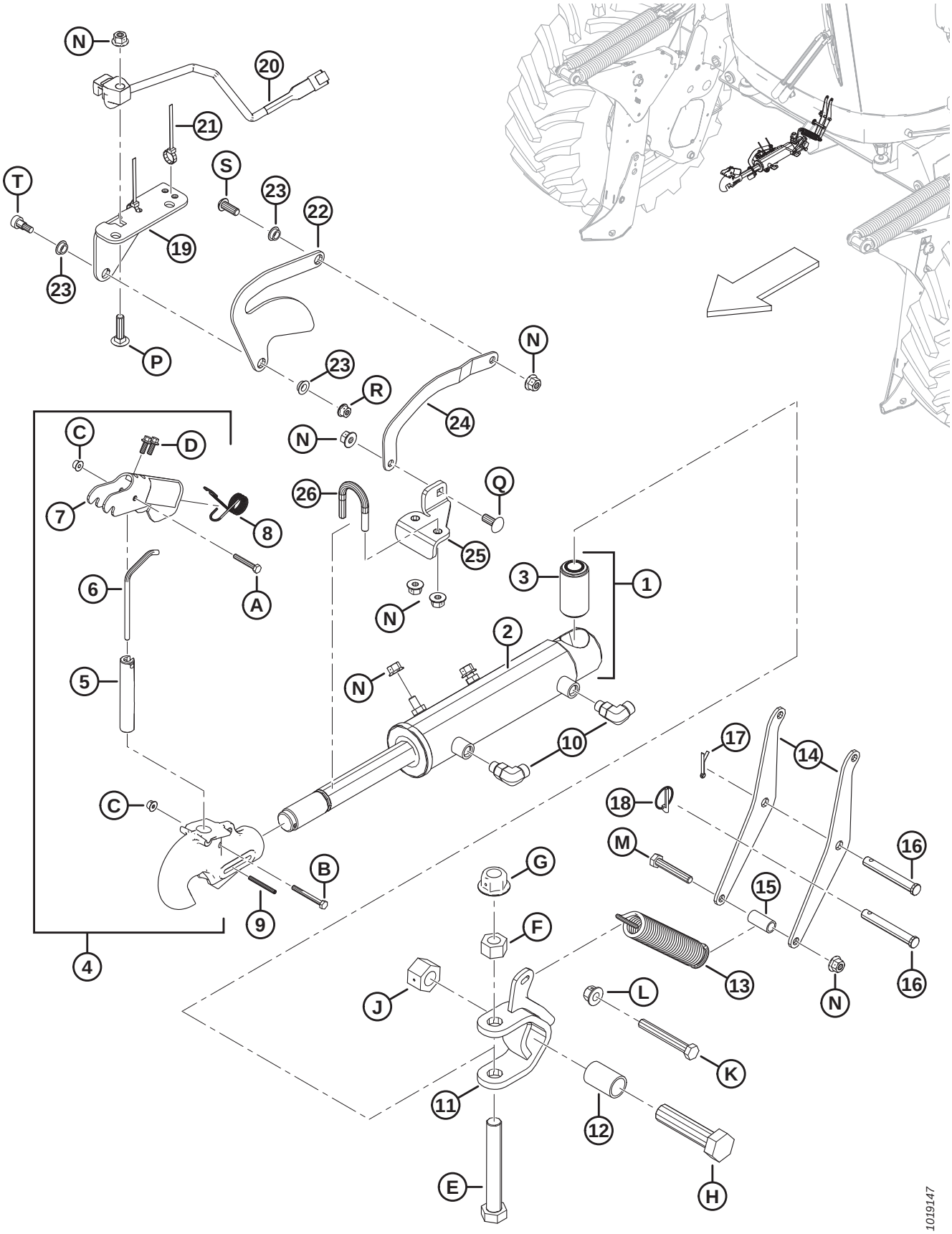
N
20
21
T
S
23
22
19
23
P
23
R
N
24
C
D
N
7
8
26
Q
25
6
A
3
1
N
2
5
N
10
17
14
C
18
M
16
B
G
15
9
F
4
13
16
J
L
N
K
11
12
E
H
1019147

CENTER-LINK

Ref	Part Number	Description	Qty	Serial Number
M	184664	BOLT – HEX HD M10 X 1.5 X 60-8.8-A3L		
N	135799	NUT – HEX FLG CTR LOC M10 X 1.5-10-A3L		
P	152732	BOLT – RHSN M10 X 1.5 X 40-8.8-A3L		
Q	136506	BOLT – RHSSN M10 X 1.5 X 25-8.8-A3L		
R	135337	NUT – HEX FLG CTR LOC M8 X 1.25-8-A2L		
S	135852	SCREW – HEX SOC BTN HD M10 X 1.5 X 25-12.9-A3L		
T	135894	SCREW – HEX SOC HD SHLDR 10 X 10-12.9-AB0C/AC0C		

17 Engine Sub Assembly

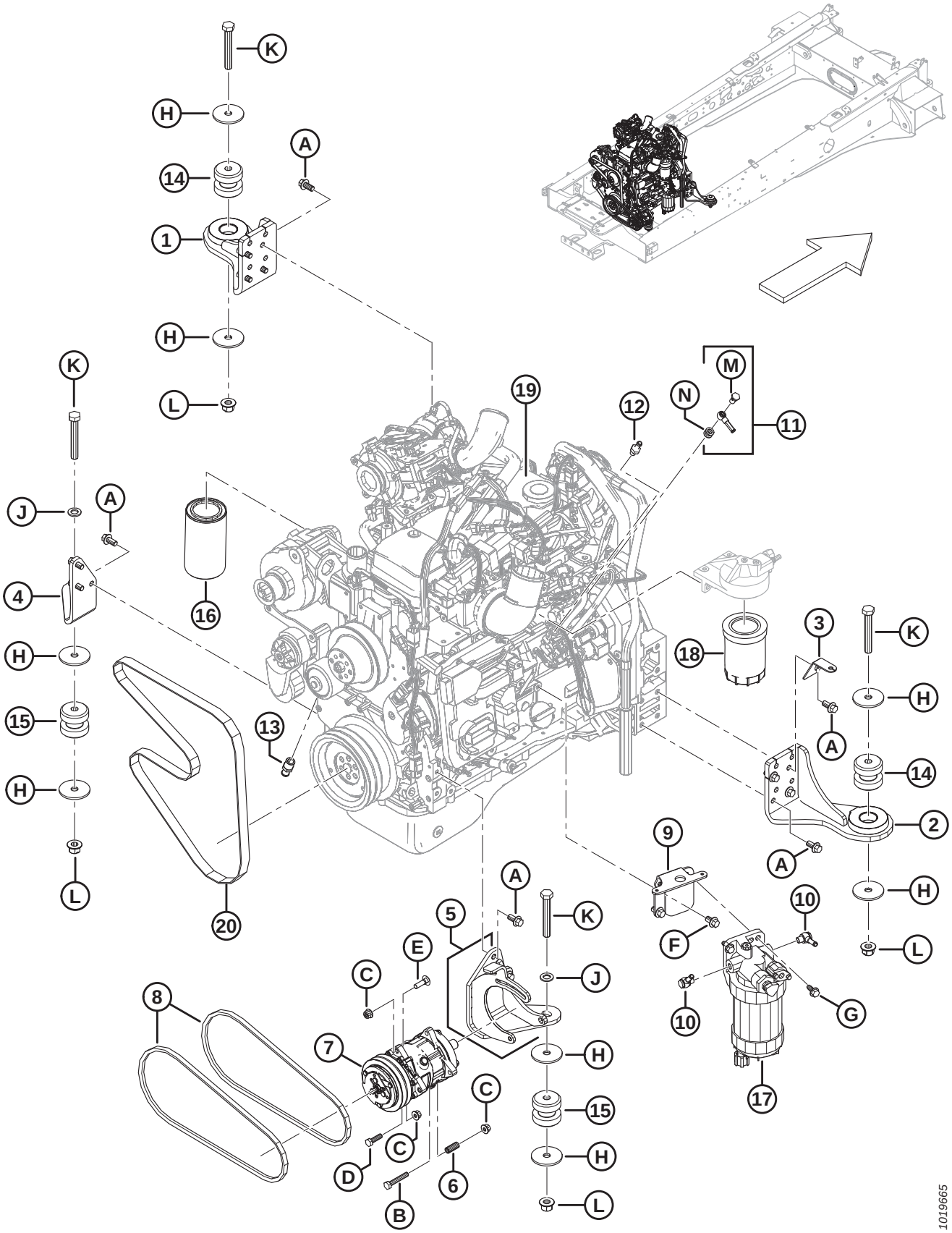

ENGINE SUB ASSEMBLY

Ref	Part Number	Description	Qty	Serial Number
1	202827	WELD'T – ENGINE MOUNT, LH	1	
2	202835	WELD'T – ENGINE MOUNT, RH	1	
3	207414	SUPPORT – HOSES	1	
4	202995	MOUNT – ENGINE, LH	1	
5	209287	ASSY – ENGINE MOUNT C/W SPACER [29]	1	
6	23050	SPACER – .583 IN O.D. X .080 IN WALL X 1.28 IN LG	1	
7	200114	COMPRESSOR – A/C	1	
8	163368	BELT – V SAE 13A (A42)	2	
9	207101	BRACKET – FUEL FILTER	1	
10	204235	FITTING – BANJO BOLT M14 [30]	2	
11	207075	FITTING – BANJO, M12 X 1.5 [31]	1	
12	200139	FITTING – ADAPTER 3/8 IN. BARBED TO M14 X 1.5	1	
13	112662	FITTING – HEATER 1/2 NPT MALE X 5/8 IN.HOSE	1	
14	202838	ISOLATOR – ENGINE MOUNT	2	
15	205366	ISOLATOR – ENGINE MOUNT	2	
16	111974	FILTER – OIL	1	
17	205028	FILTER – FUEL, PRIMARY	1	
18	205029	FILTER – FUEL, SECONDARY	1	
19	207906	FILTER – CRANKCASE BREATHER	1	
20	207963	BELT – FAN DRIVE-ENDURANCE	1	
A	148798	BOLT – HEX FLG HD M12 X 1.75 X 30-10.9-A3L		
B	184664	BOLT – HEX HD M10 X 1.5 X 60-8.8-A3L		
C	135799	NUT – HEX FLG CTR LOC M10 X 1.5-10-A3L		
D	30628	BOLT – HEX HD M10 X 1.5 X 35-8.8-A3L		
E	135691	BOLT – RHSN TFL M10 X 1.5 X 35-8.8-A3L		
F	136398	BOLT – HEX FLG HD TFL M12 X 1.75 X 20-8.8-A3L		
G	136135	SCREW – HEX WASHER HD M10 X 1.5 X 25-450HV-A3L		
H	203554	WASHER		
J	184717	WASHER – FLAT REG M16-200HV-A3L		
K	184679	BOLT – HEX HD M16 X 2 X 110-10.9-A3L		
L	152520	NUT – HEX FLG TECH LOC M16 X 2-10-A3L		
M	110995	BOLT – BANJO		
N	110996	WASHER – BANJO (2-PACK)		

29. Includes spacer (MD #23050).
30. Includes bolt and washers.
31. Includes bolt (MD #110995) and washers (MD #110996).

18 Fuel System

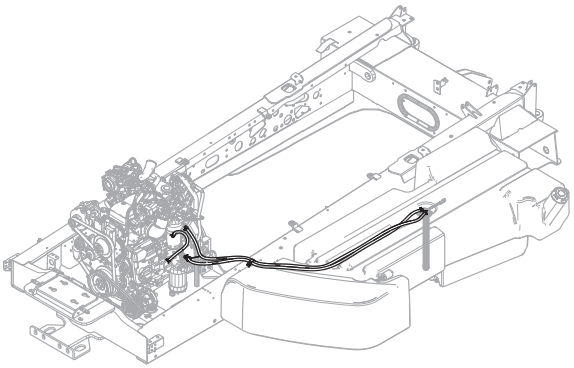

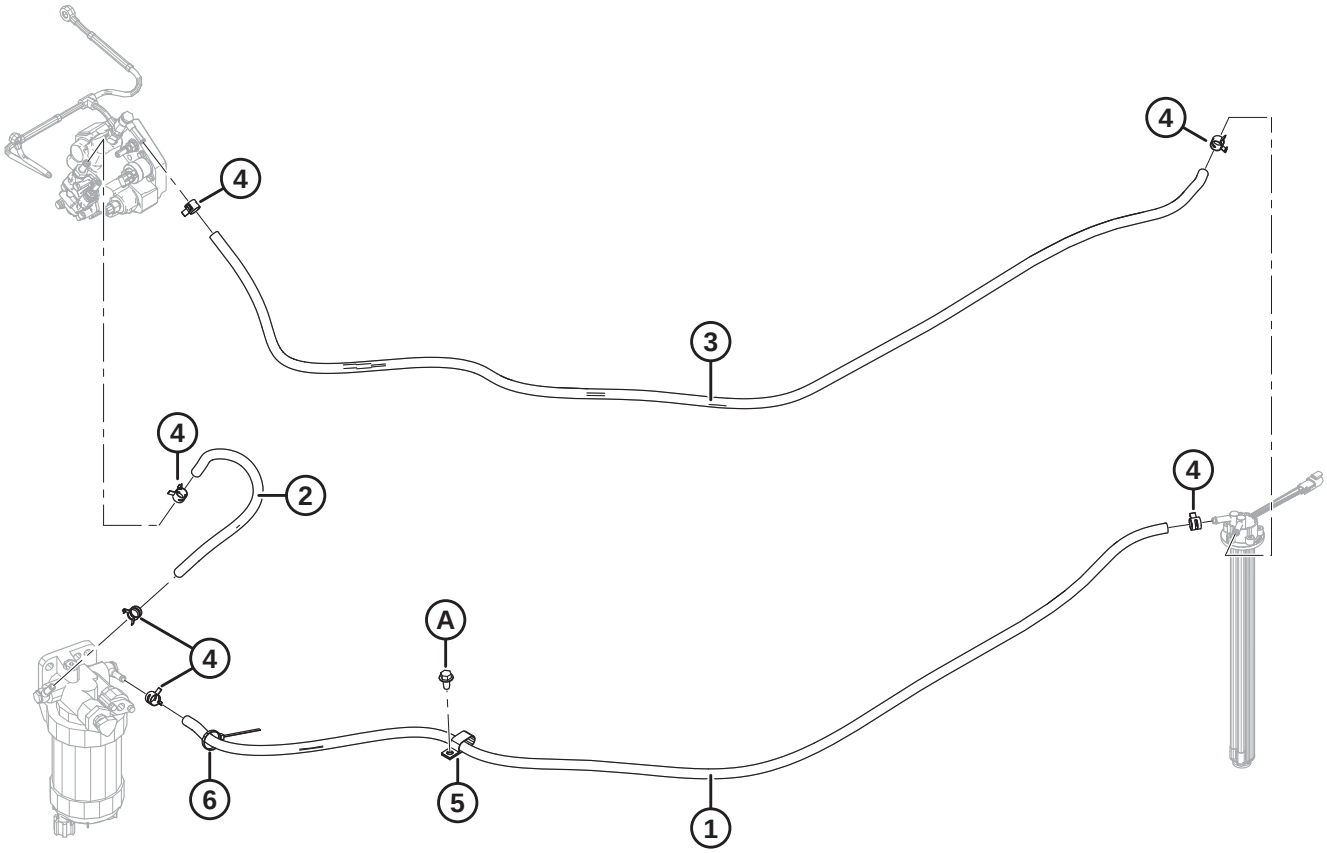

1015867

FUEL SYSTEM

Ref	Part Number	Description	Qty	Serial Number
1	203294	HOSE – FUEL, 3/8 IN I.D., 1970 MM LG	1	
2	203293	HOSE – FUEL, 3/8 IN I.D., 430 MM LG	1	
3	204055	HOSE – FUEL, 3/8 IN I.D., 2100 MM LG	1	
4	136743	CLAMP – 16 MM I.D., CONSTANT TENSION	6	
5	135235	CLAMP – DOUBLE HOSE INSULATED	1	
6	40702	FASTENER – CABLE TIE (RED)	1	
A	136209	SCREW – THREAD ROLLING FLG M10 X 1.5X20-A3L	1	

19 Engine Air Intake

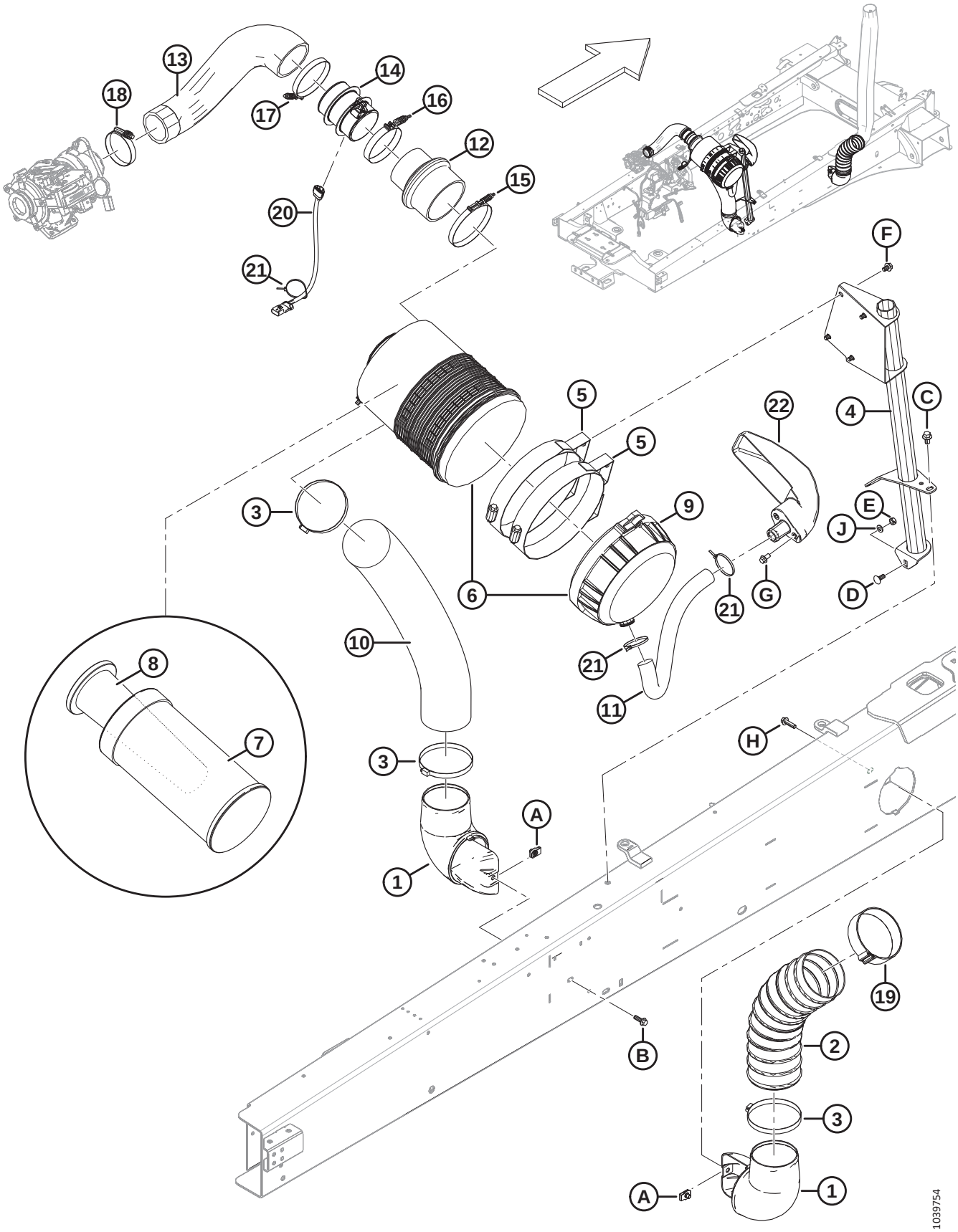

ENGINE AIR INTAKE

Ref	Part Number	Description	Qty	Serial Number
1	204102	ELBOW – AIR DUCT	2	
2	203108	HOSE – 127 MM I.D.	1	
3	166869	CLAMP – HOSE (89-140 MM)	3	
4	205097	WELD'T – SUPPORT, 4-CYL AIR CLEANER	1	
5	163976	BRACKET – AIR CLEANER SUPPORT	2	
6	162144	AIR CLEANER [32]	1	
	111957	VALVE – DUST EJECTOR		
7	111954	FILTER – AIR, PRIMARY	1	
8	111955	FILTER – AIR, SECONDARY	1	
9	111956	COVER – AIR CLEANER	1	
10	207638	HOSE – 127 MM I.D.	1	
11	202446	HOSE – ASPIRATOR, 530 MM LG	1	
12	203643	HOSE – HUMP, 4 TO 5 IN.	1	
13	209225	ELBOW – RUBBER	1	
14	204604	ASSY – TBAP HOUSING	1	
15	162102	CLAMP – CONSTANT TORQUE, 135-143 MM I.D.	1	
16	162446	CLAMP – CONSTANT TORQUE, 109-116 MM I.D.	1	
17	135870	CLAMP – CONSTANT TORQUE, 116-124 MM I.D.	1	
18	209520	CLAMP – CONSTANT TORQUE, 83-105 MM I.D.	1	
19	208576	STRAP – CINCH, 600 MM LG	1	
20	207435	HARNESS – TBAP	1	
21	21763	FASTENER – CABLE TIE, BLACK, 160 MM LG	3	
22	207192	ASPIRATOR – AIR CLEANER	1	
A	136620	NUT – U MULTI THREAD		
B	184665	BOLT – HEX FLG HD M10 X 1.5 X 30-10.9-A3L		
C	136398	BOLT – HEX FLG HD TFL M12 X 1.75 X 20-8.8-A3L		
D	135785	BOLT – RHSN M10 X 1.5 X 25-8.8-A3L		
E	**320206**	**NUT – HEX CTR LOC M10 X 1.5-8-ZINC**		
F	136151	BOLT – HEX FLG HD TFL M10 X 1.5 X 16-8.8-A3L		
G	152655	BOLT – HEX FLG HD M10 X 1.5 X 20-8.8-A3L		
H	**136211**	**BOLT – HEX FLG HD M10 X 1.5 X 35-8.8-AA1J**		
J	**184711**	**WASHER – FLAT REG M10-200HV-AA1J**		

32. Includes primary air filter (MD #111954), secondary air filter (MD #111955), cover (MD #111956), and dust ejector valve (MD #111957).

20 Engine Exhaust

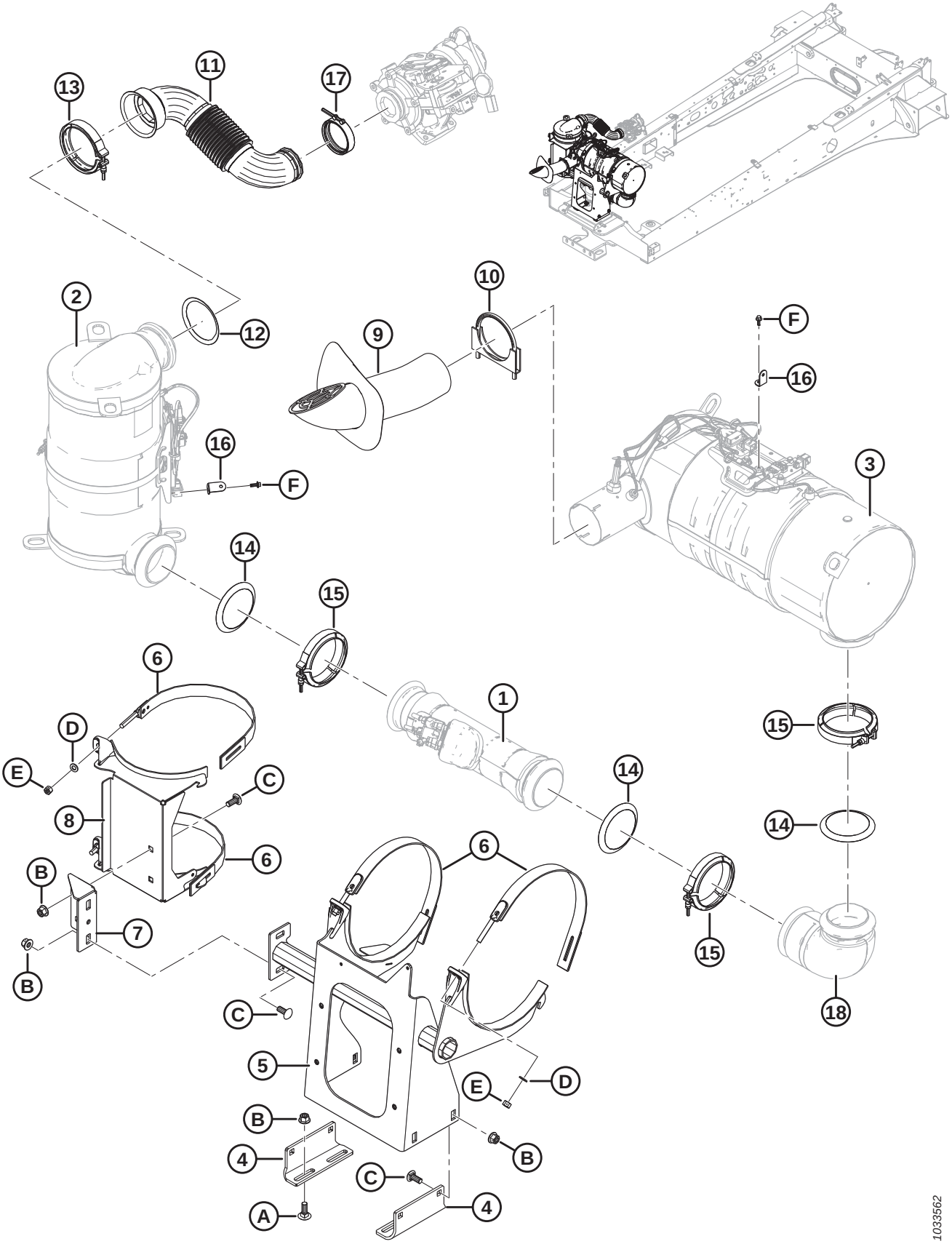

ENGINE EXHAUST

Ref	Part Number	Description	Qty	Serial Number
1	NSS	ASSY – DECOMPOSITION REACTION TUBE (DRT) [33]	1	
2	NSS	ASSY – DIESEL OXIDATION CATALYST (DOC) [34]	1	
3	NSS	ASSY – SELECTIVE CATALYTIC REDUCTION (SCR) [35]	1	
4	209997	ANGLE – EXHAUST SUPPORT	2	
5	207166	SUPPORT – SCR, WELDT	1	
6	207154	CLAMP – STRAP ASSEMBLY	4	
7	204822	BRACKET – AT EXHAUST WELDMENT	1	
8	207172	SUPPORT – DOC, WELDT	1	
9	310704	TUBE – EXHAUST, WELDT, 4 CYL	1	
10	203098	CLAMP – U-BOLT	1	
11	209972	TUBE – EXHAUST, CUMMINS	1	
12	203777	GASKET – STD MARMON 102 MM	1	
13	204732	CLAMP – 4 IN. MARMON STANDARD	1	
14	202487	GASKET – SPH MARMON 102 MM	3	
15	203373	CLAMP – 4 IN. MARMON SPHERICAL	3	
16	207424	SUPPORT – HARNESS	2	
17	204656	CLAMP – TURBO	1	
18	NSS	ELBOW – EXHAUST [36]	1	
A	136291	BOLT – RHSN TFL M12 X 1.75 X 35-8.8-A3L		
B	136431	NUT – HEX FLG CTR LOC M12 X 1.75-10-A3L		
C	152702	BOLT – RHSSN M12 X 1.75 X 30-8.8-A3L		
D	184711	WASHER – FLAT REG M10-200HV-A3L		
E	135800	NUT – HEX CTR LOC SPCL M10 X 1.5-9-A3L		
F	135959	BOLT – HEX FLG HD M6 X 1 X 16-10.9-A2L		

33. Part serviced through Cummins. Contact your Cummins dealer. Cummins part #4353759.
34. Part serviced through Cummins. Contact your Cummins dealer. Cummins part #5307180.
35. Part serviced through Cummins. Contact your Cummins dealer. Cummins part #4387768.
36. Part serviced through Cummins. Contact your Cummins dealer. Cummins part #4352952.

21 Engine Cooling System

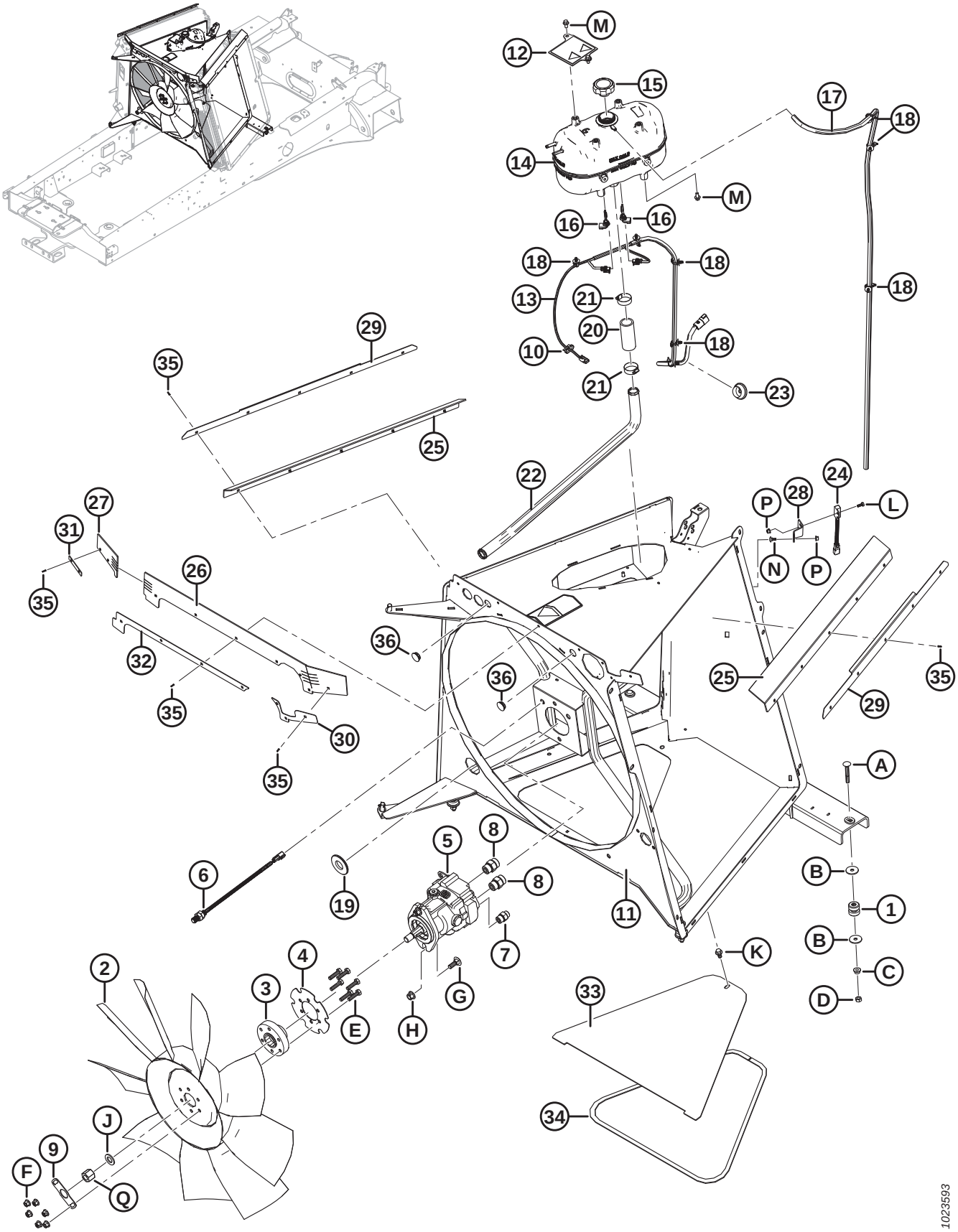

ENGINE COOLING SYSTEM

Ref	Part Number	Description	Qty	Serial Number
1	205159	INSULATOR – RUBBER	4	
2	205269	FAN – 813 MM, 9 BLADE	1	
3	200273	ADAPTER – HYD FAN DRIVE	1	
4	201638	DISC – SPEED SENSOR PICKUP	1	
5	145392	MOTOR – HYDRAULIC C/W KEY	1	
	279003	SEAL KIT		
	111895	KEY – SQUARE		
6	136167	SENSOR – SPEED	1	
7	184463	FITTING – ADAPTER 8 MORFS X 10 MORB	1	
	44210	O-RING – #10 ORB		
	135866	O-RING – #8 ORFS		
8	135788	FITTING – ADAPTER	2	
	30971	O-RING – #12 ORB		
	135868	O-RING – #12 ORFS		
9	201434	LOCK – FAN HUB NUT	1	
10	21763	FASTENER – CABLE TIE, BLACK, 160 MM LG	1	
11	208521	FAN BOX – W/ DECAL [37]	1	
	306620	KIT – COOLER BOX LATCH [38]		
12	**306796**	**ASSY – PANEL, DECAL** [39]	**1**	**421190–**
	207450	PANEL – W/ DECAL [40]	1	**–421189**
13	207284	HARNESS – COOLER BOX	1	
14	202455	ASSY – TANK, COOLANT, PRESSURIZED	1	
15	202325	CAP – SURGE TANK	1	
16	204784	SWITCH – LEVEL	2	
17	205666	HOSE – COOLANT VENT, 5/16 IN. I.D., 1735 MM LG	1	
18	136655	FASTENER – FIR TREE MOUNT W/ TIE, 200 MM LG	3	
19	136638	GROMMET – 31.75 MM I.D.	1	
20	209813	HOSE – STUB, 41 MM O.D., 95 MM LG	1	
21	136646	CLAMP – LINED-SS, 27–51 MM RANGE	2	
22	205201	TUBE – FILL	1	
23	167709	GROMMET – 10 MM I.D. X 38 MM O.D.	1	
24	200974	SWITCH – PROXIMITY	1	
25	206680	SEAL – ANGLE TOP	2	
26	206897	SEAL – ANGLE CENTER	1	
27	206896	SEAL – ANGLE LEFT	1	
28	204553	BRACKET – DOOR SWITCH	1	
29	206679	PLATE – HOOD, UPPER SEAL	2	
30	207447	PLATE – SEAL, RH	1	
31	207452	PLATE – SEAL, LH	1	
32	206899	PLATE – SEAL, CENTER	1	

37. Includes access panel (MD #208523), bottom cover seal (MD #208530), and bolt (MD #152655).
38. Kit includes cooler box hood latch (NSS) and instruction decal (NSS).
39. For model year 2022 and later windrowers. Includes nitrite-free decal (MD #306756).
40. For model year 2021 and prior windrowers. Includes fill rate decal (MD #166824).

ENGINE COOLING SYSTEM

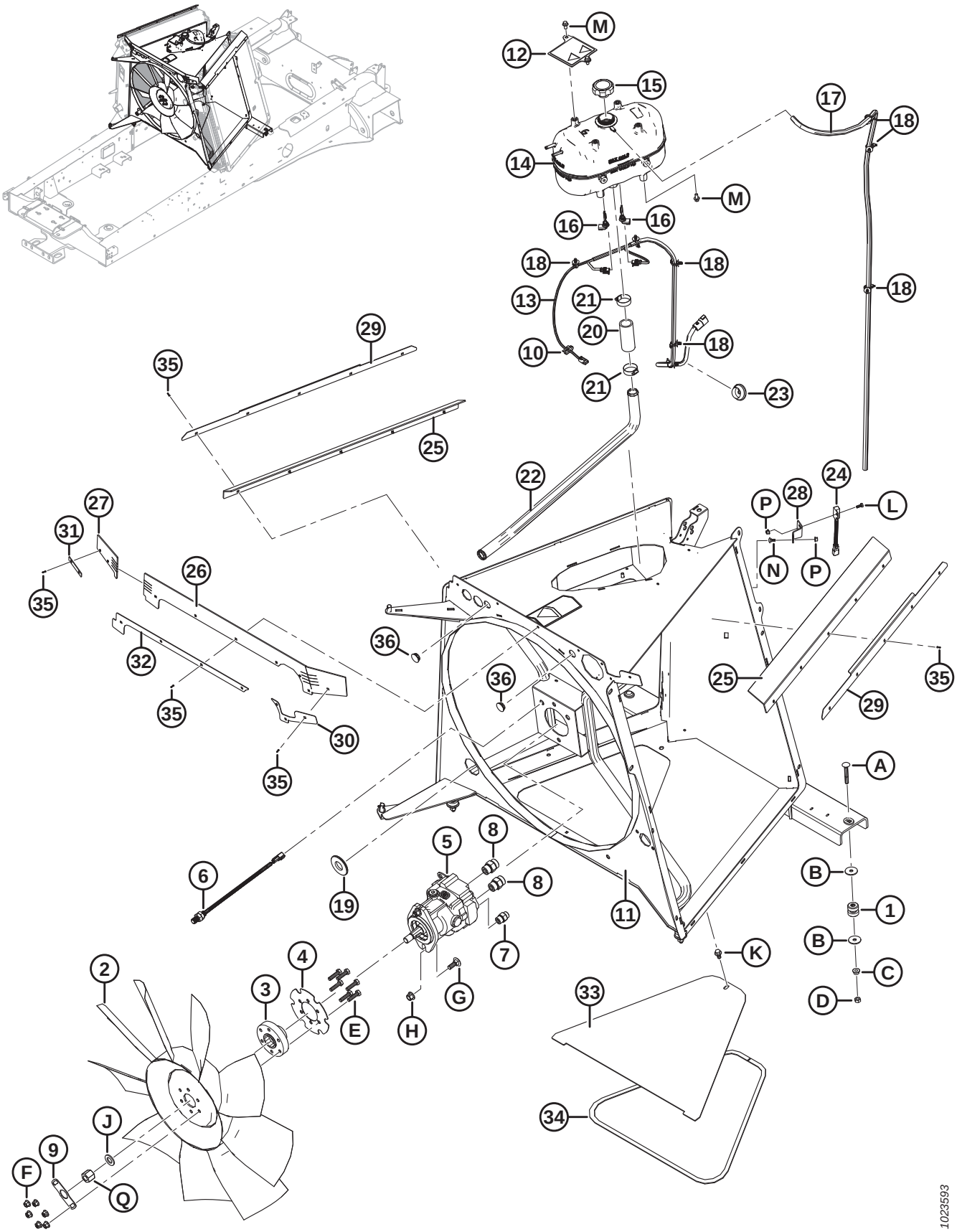

ENGINE COOLING SYSTEM

Ref	Part Number	Description	Qty	Serial Number
33	208523	ASSY – ACCESS PANEL	1	
34	208530	SEAL – BOTTOM COVER	1	
35	252667	RIVET – 1/4 IN. X 5/8 IN.	19	
36	200780	PLUG – NYLON, BLACK, 30 MM O.D.	2	
A	136495	BOLT – RHSN M10 X 1.5 X 70-8.8-AA3L		
B	184583	WASHER – FLAT		
C	135927	NUT – HEX SMTH FLG M10 X 1.5-8-A3L		
D	30505	NUT – HEX M10 X 1.5-10-A3L		
E	135319	BOLT – HEX HD M10 X 1.5 X 40-8.8-A3L		
F	135799	NUT – HEX FLG CTR LOC M10 X 1.5-10-A3L		
G	136291	BOLT – RHSN TFL M12 X 1.75 X 35-8.8-A3L		
H	136431	NUT – HEX FLG CTR LOC M12 X 1.75-10-A3L		
J	18601	WASHER – SAE FLAT 13/16 I.D. X 1.5 IN. O.D. ZP		
K	152655	BOLT – HEX FLG HD M10 X 1.5 X 20-8.8-A3L		
L	184642	BOLT – HEX HD TFL M6 X 1 X 16-8.8-A2L		
M	136485	BOLT – HEX FLG HD TFL M8 X 1.25 X 16-8.8-A3L		
N	136774	BOLT – RHSN M6 X 1 X 16-8.8-PLN		
P	152668	NUT – HEX FLG CTR LOC M6 X 1-8-A2L		
Q	135280	NUT – HEX HEAVY 3/4-16 UNF GR 8 BLACK		

22 Cooling Module – Left

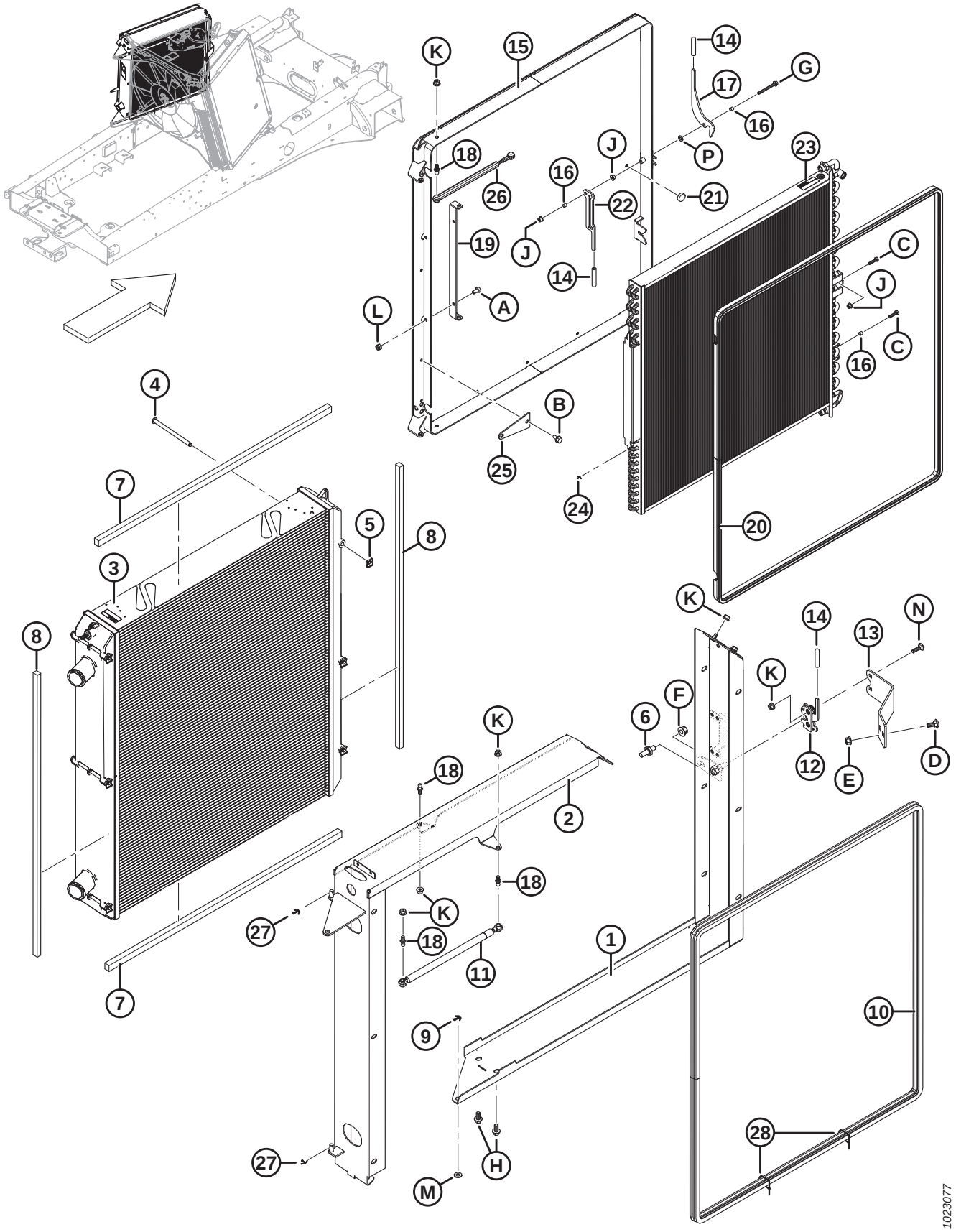

COOLING MODULE – LEFT

Ref	Part Number	Description	Qty	Serial Number
1	208512	RAD DOOR BASE FRAME – WELDT	1	
2	208513	RAD DOOR TOP FRAME – WELDT	1	
3	203152	RADIATOR	1	
4	205070	PIN – 9.7 MM O.D. X 140 MM	6	
5	205071	CLIP – PIN	6	
6	136598	STRIKER – BOLT	1	
7	208510	SEAL – RAD HORIZONTAL	2	
8	208509	SEAL – RAD VERTICAL	2	
9	18605	PIN – COTTER 1/8 DIA X 1 ZP	1	
10	208553	SEAL – BULB	1	
11	203389	CYLINDER – GAS SPRING	1	
12	134003	ASSY – STIRRUP LATCH	1	
13	208547	BRACKET – LATCH	1	
14	110817	COVER – SOFTEX GRIP	3	
15	208528	SCREEN CHAFF – WELDT	1	
16	291268	BUSHING – STAINLESS STEEL	3	
17	208529	LATCH – SCREEN CHAFF	1	
18	136188	STUD – BALL (10 MM); M8 THREAD	4	
19	208531	BRACKET – FRAME TO COOLER	1	
20	201598	SEAL – BULB	1	
21	208556	BUMPER – RUBBER	1	
22	208533	BRACKET – CLEAN OUT	1	
23	203153	CONDENSER	1	
24	18728	PIN – COTTER 1/16 DIA X 3/4 ZP	1	
25	205374	SUPPORT – A/C HOSE	1	
26	109603	SPRING – GAS	1	
27	18604	PIN – COTTER 3/32 DIA X 3/4 ZP	2	
28	21763	FASTENER – CABLE TIE, BLACK, 160 MM LG	2	
A	50139	BOLT – HEX HD TFL M8 X 1.25 X 16-8.8-A2L		
B	134705	SCREW – HEX WASHER HD M8 X 1.25 X 16-A3L		
C	135301	BOLT – HEX HD M6 X 1 X 25-8.8-A2L		
D	135785	BOLT – RHSN M10 X 1.5 X 25-8.8-A3L		
E	135799	NUT – HEX FLG CTR LOC M10 X 1.5-10-A3L		
F	136431	NUT – HEX FLG CTR LOC M12 X 1.75-10-A3L		
G	136704	BOLT – HEX FLG HD M6 X 1 X 60-8.8-AA2L		
H	152655	BOLT – HEX FLG HD M10 X 1.5 X 20-8.8-A3L		
J	152668	NUT – HEX FLG CTR LOC M6 X 1-8-A2L		
K	152863	NUT – HEX FLG STVR LOC M8 X 1.25-10-AA2L		
L	184688	NUT – HEX NYLOC M8 X 1.25-8-A2L		
M	184711	WASHER – FLAT REG M10-200HV-A3L		
N	190752	BOLT – RHSN M8 X 1.25 X 30-8.8-A2L		
P	30716	WASHER – LOC SPRING M8-CS-1055-1065-A2L		

23 Cooling Module – Right

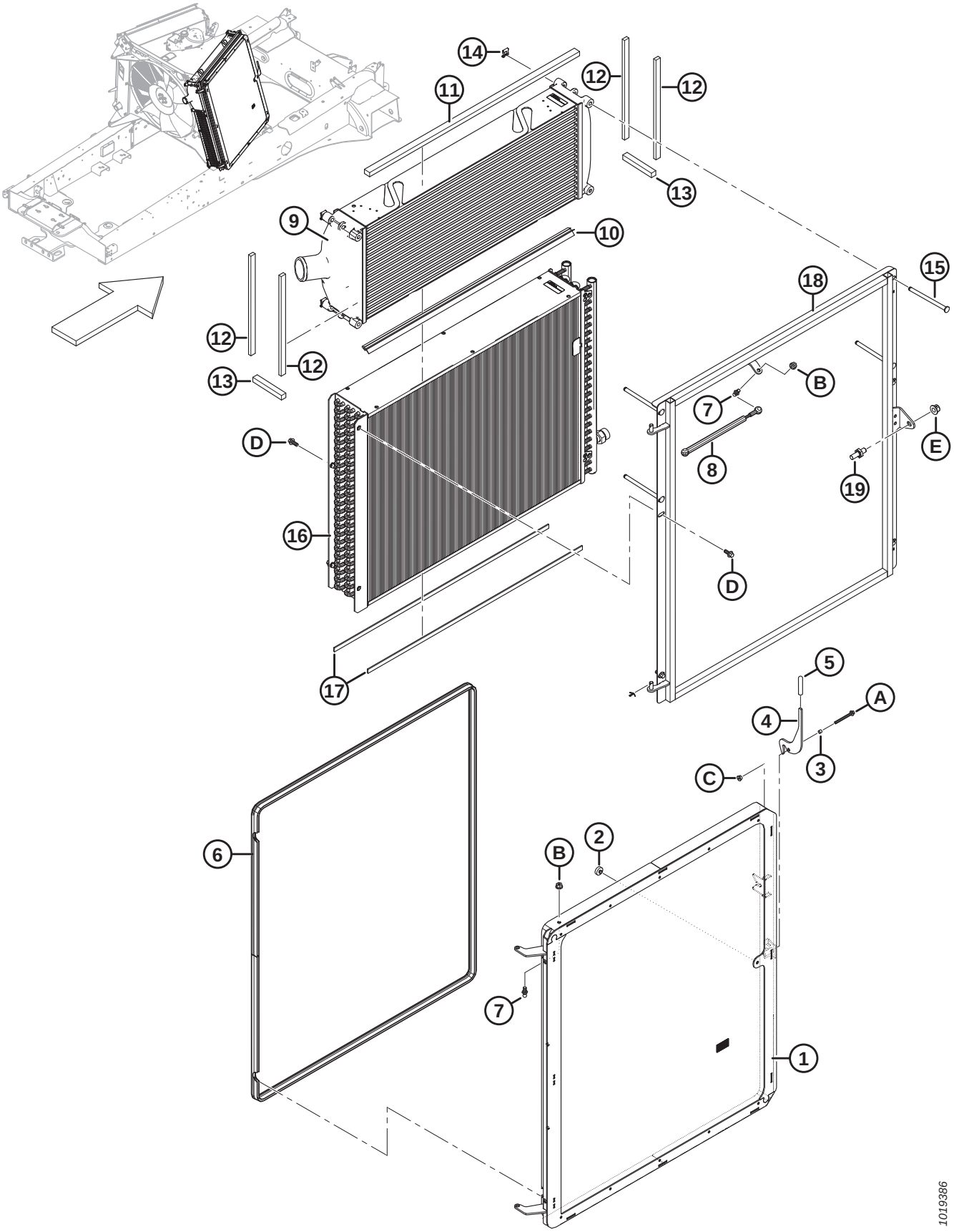

COOLING MODULE – RIGHT

Ref	Part Number	Description	Qty	Serial Number
1	208528	WELDT – SCREEN CHAFF	1	
2	208556	BUMPER – RUBBER	1	
3	291268	BUSHING – STAINLESS STEEL	1	
4	208529	LATCH – SCREEN CHAFF	1	
5	110817	COVER – SOFTEX GRIP	2	
6	201598	SEAL – BULB	1	
7	136188	STUD – BALL (10 MM); M8 THREAD	2	
8	109603	SPRING – GAS	1	
9	203151	CHARGE AIR COOLER	1	
10	208554	SEAL – SILICONE, ORANGE	1	
11	208507	SEAL – CAC, TOP	1	
12	208506	SEAL – CAC, SIDE	4	
13	208508	SEAL – CAC, BOTTOM END	2	
14	205071	CLIP – PIN	4	
15	205070	PIN – 9.7 MM O.D. X 140 MM	4	
16	203154	COOLER – HYDRAULIC OIL	1	
17	208541	SEAL – HYDRAULIC OIL COOLER	2	
18	208555	WELDT – COOLER FACE FRAME	1	
19	136598	STRIKER – BOLT	1	
A	136704	BOLT – HEX FLG HD M6 X 1 X 60-8.8-AA2L		
B	152863	NUT – HEX FLG STVR LOC M8 X 1.25-10-AA2L		
C	152668	NUT – HEX FLG CTR LOC M6 X 1-8-A2L		
D	136300	BOLT – HEX FLG HD TFL M8 X 1.25 X 20-8.8-AA3L		
E	136431	NUT – HEX FLG CTR LOC M12 X 1.75-10-A3L		

24 Charge Air Cooler Plumbing

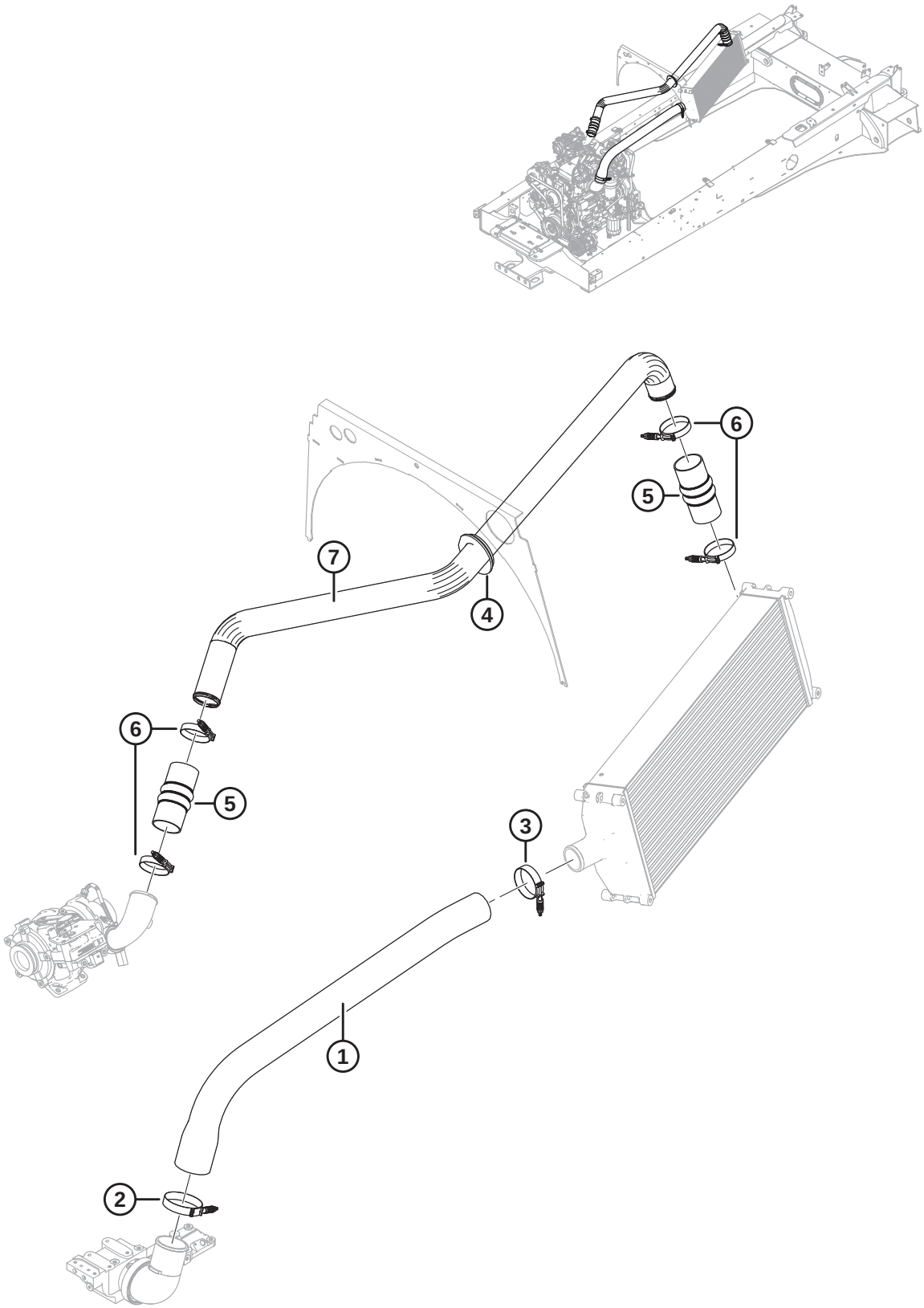

CHARGE AIR COOLER PLUMBING

Ref	Part Number	Description	Qty	Serial Number
1	207899	HOSE – CHARGE AIR COOLER, OUTLET	1	
2	162342	CLAMP – CONSTANT TORQUE, 3.56 IN. NOM	1	
3	136480	CLAMP – CONSTANT TORQUE, Ø3 IN. NOM	1	
4	163779	GROMMET – 2.5 IN. SILICONE	1	
5	163904	CONNECTOR – CAC, 2.5 IN.	2	
6	163957	CLAMP – CONSTANT TORQUE, Ø2.75 IN. NOM	4	
7	206116	TUBE – CHARGE AIR COOLER, INLET	1	

25 Radiator Plumbing

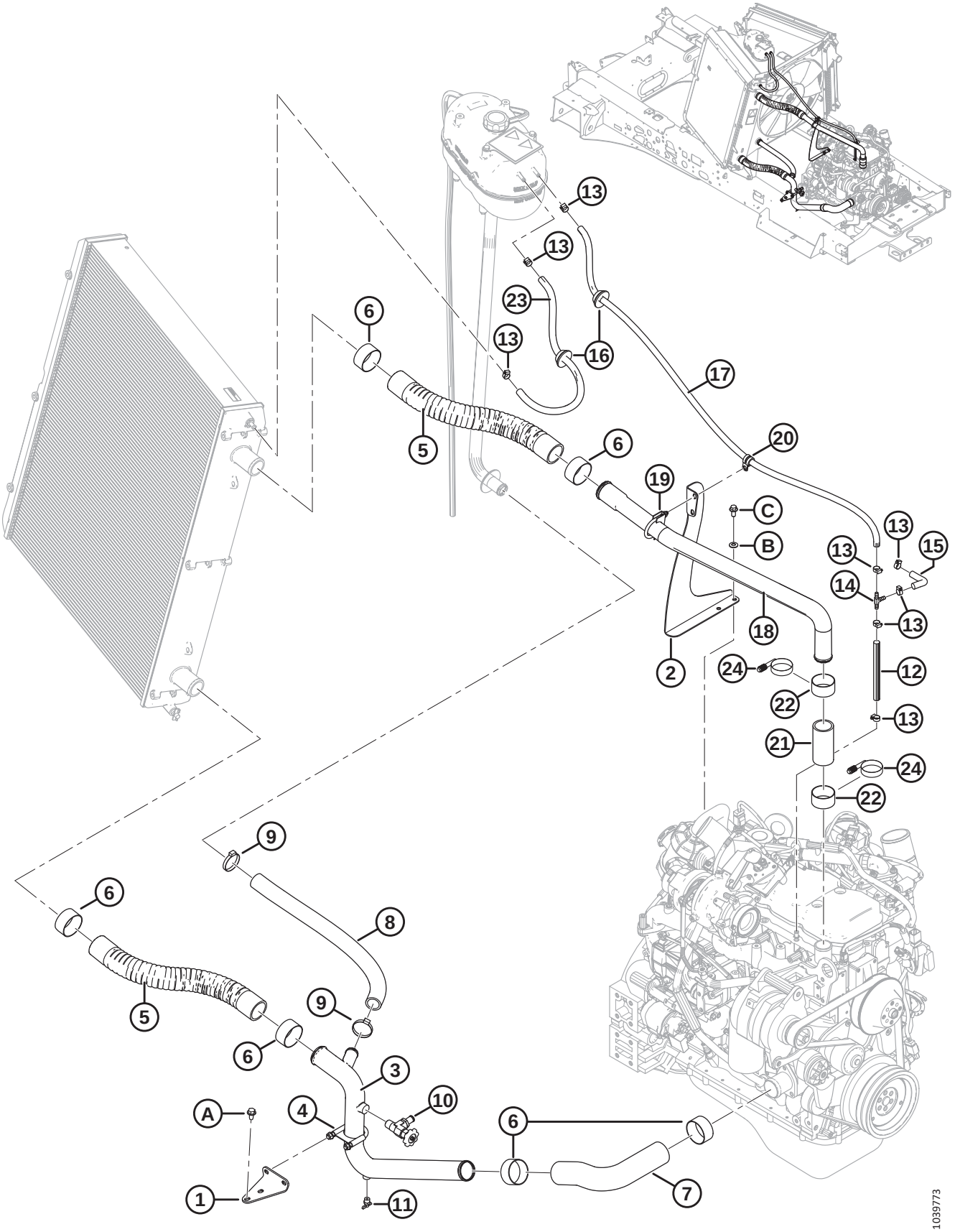

RADIATOR PLUMBING

Ref	Part Number	Description	Qty	Serial Number
1	202734	SUPPORT – TUBE	1	
2	203929	SUPPORT – TUBE	1	
3	202732	TUBE – RAD, INLET	1	
4	136109	CLAMP – U-BOLT, 2 IN. DIA	1	
5	206121	HOSE – RADIATOR, FLEX, 50.8 MM X 508 MM LG	2	
6	306119	KIT – CLAMP, SVC 57.1–63.5 MM [41]	6	
7	206114	HOSE – RADIATOR, BOTTOM	1	
8	203295	HOSE – RADIATOR FILL, 1.25 IN. I.D., 640 MM LG	1	
9	162444	CLAMP – HOSE	2	
10	101904	VALVE – 90°	1	
11	20023	FITTING – DRAIN COCK, 1/4 NPT	1	
12	206593	HOSE – COOLANT, 5/16 IN. I.D., 190 MM LG	1	
13	30500	CLAMP – HOSE GEAR TYPE	8	
14	200402	FITTING – TEE, 5/16 IN., BARBED	1	
15	206592	HOSE – COOLANT, 5/16 IN. I.D., 110 MM LG	1	
16	42080	GROMMET – RUBBER, POLYURETHANE	2	
17	203941	HOSE – COOLANT, 5/16 IN I.D., 1380 MM	1	
18	203927	TUBE – RAD, TOP	1	
19	136110	CLAMP – U-BOLT, 1.75 IN. DIA	1	
20	135716	CLAMP – INSULATED 5/8 IN.	1	
21	310818	HOSE – 44.5 MM I.D. X 110 MM	1	
22	306120	KIT – CLAMP, SVC 50.8–57.2 MM [41]	2	
23	205242	HOSE – COOLANT, 5/16 X 670 MM LG	1	
24	**306647**	**CLAMP – CONSTANT TORQUE 45-67** [42]	**OPT**	
A	136209	SCREW – HEX WASHER HD M10 X 1.5 X 20-450HV-A3L		
B	184584	WASHER – CON SPRING M10A STL SAE 1050-1075		
C	152655	BOLT – HEX FLG HD M10 X 1.5 X 20-8.8-A3L		

41. Includes one heat shrink clamp and instructions.
42. Available as an alternative to the heat shrink clamp kit (MD #306120).

26 Hood

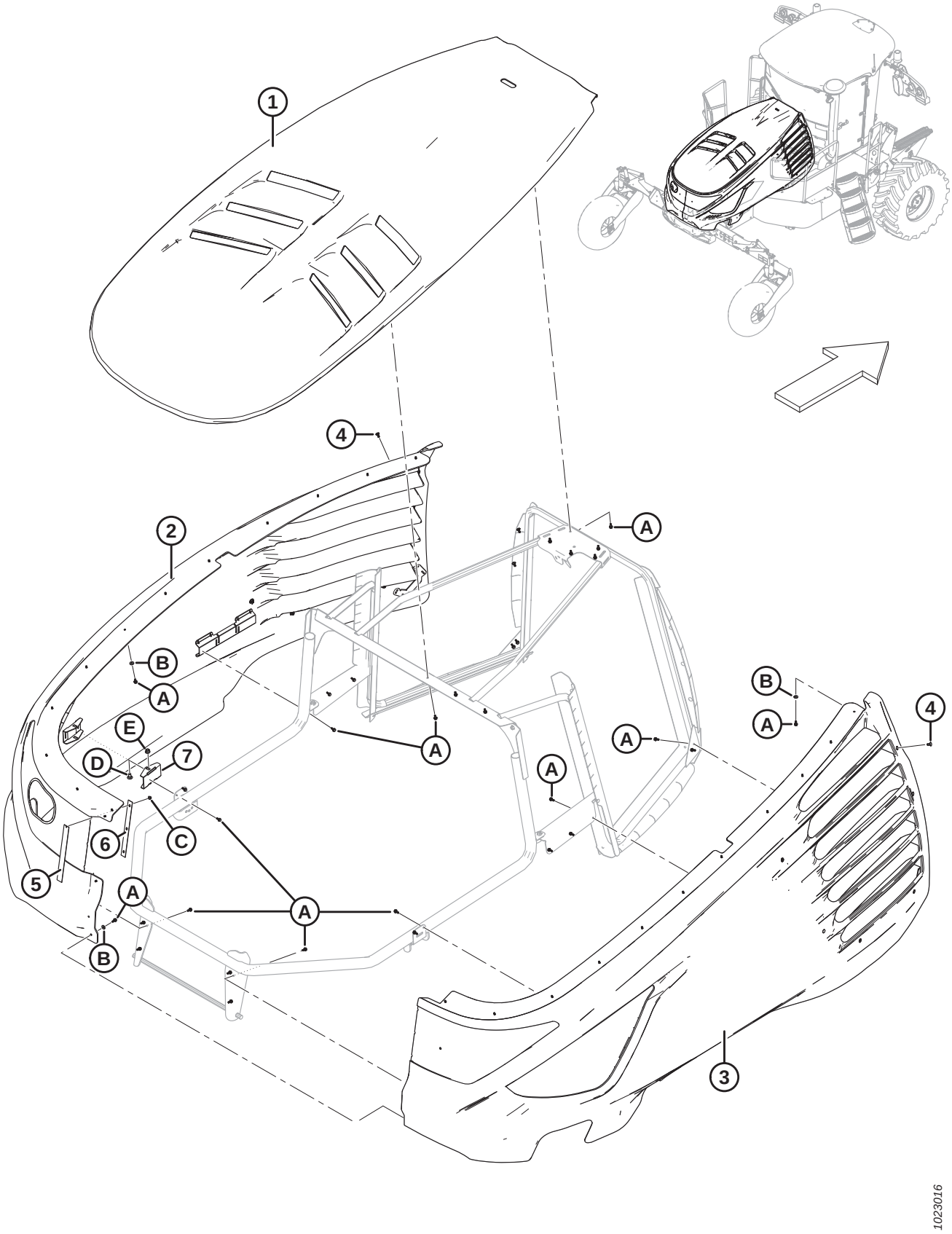

HOOD

Ref	Part Number	Description	Qty	Serial Number
1	306024	SERVICE KIT – TOP PANEL [43]	1	
2	291608	SERVICE KIT – PANEL, LH [44]	1	
	208562	BEZEL – SCREEN	1	
3	291609	SERVICE KIT – PANEL, RH [45]	1	
4	208860	CLIP – PUSH IN, RED	12	
5	209947	WELDMENT – SCREEN CENTER	2	
6	209949	STRIP – CENTER, BACKSIDE	2	
7	291799	BRACKET – ADJUSTABLE	2	
A	252284	SCREW – HEX WASHER HD M6 X 1 X 16-450HV-A3L		
B	184706	WASHER – FLAT LARGE M6-200HV-A2L		
C	152668	NUT – HEX FLG CTR LOC M6 X 1-8		
D	136178	BOLT – RHSN M10 X 1.5 X 20-8.8-A3L		
E	135799	NUT – HEX FLG CTR LOC M10 X 1.5-10		

43. Includes hood latch decal (MD #208763).
44. Includes rear screen (NSS), clips (MD #208860), screen weldment (MD #209947), center strip (MD #209949), adjustable bracket (MD #291799), screen bezel (MD #208562), and hardware.
45. Includes rear screen (NSS), clips (MD #208860), screen weldment (MD #209947), center strip (MD #209949), adjustable bracket (MD #291799), and hardware.

27 Hood Frame

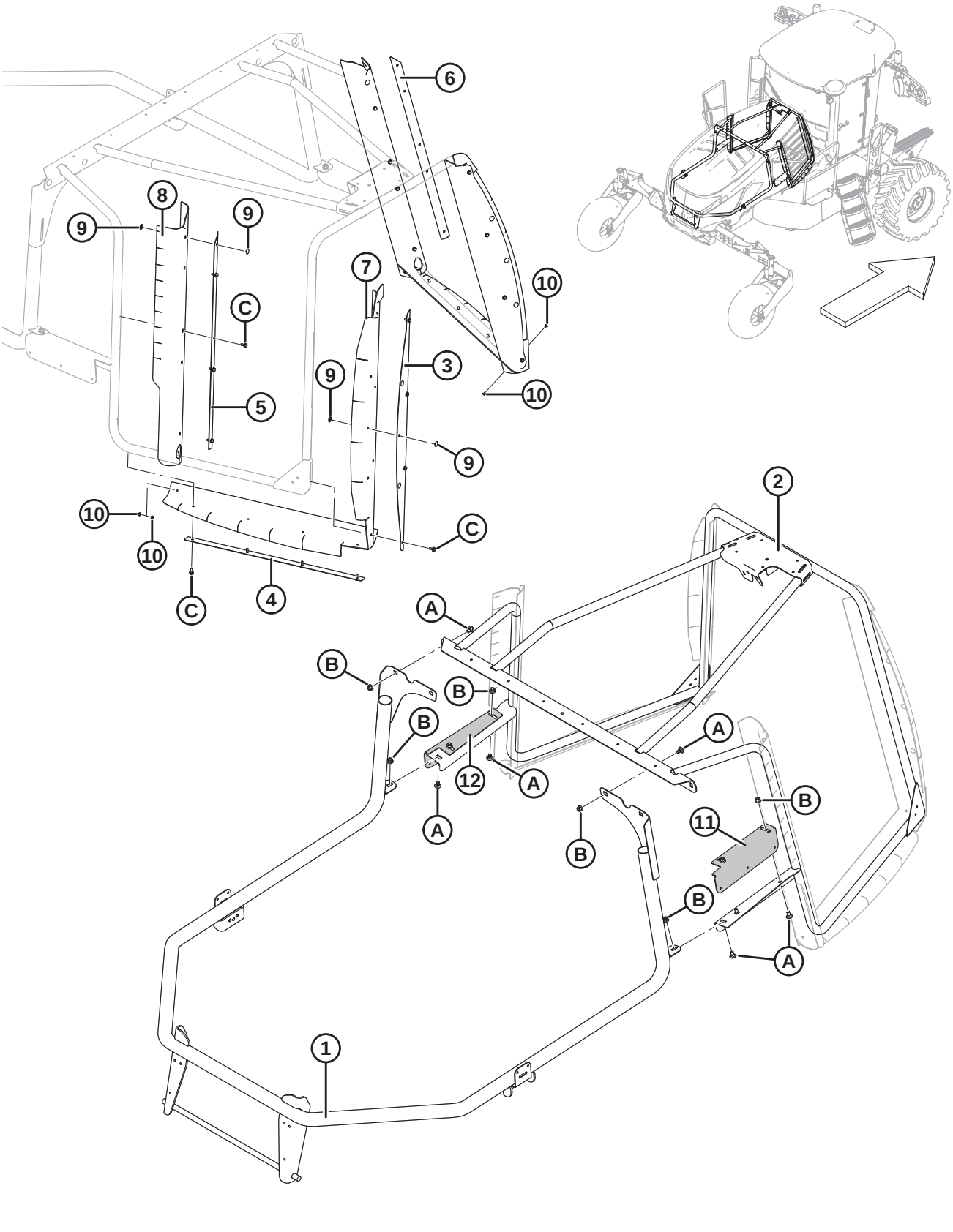

HOOD FRAME

Ref	Part Number	Description	Qty	Serial Number
1	205441	SUPPORT – HOOD REAR, WELDT	1	
2	291937	SERVICE KIT – HOOD FRAME, FRONT [46]	1	
3	207868	PLATE – HOOD, FRONT SEAL	2	
4	206665	PLATE – HOOD, BOTTOM SEAL	2	
5	207870	PLATE – HOOD, REAR SEAL, RH	1	
6	207869	PLATE – HOOD, REAR SEAL, LH	1	
7	207257	ANGLE – SEAL, FRONT	2	
8	207256	ANGLE – SEAL, REAR	2	
9	207329	CLIP – RATCHET RIVET	16	
10	208321	CLIP – BINDING POST, 1/4 IN.	4	
11	291796	BRACKET – PANEL, RH	1	
12	291795	BRACKET – PANEL, LH	1	
A	136178	BOLT – RHSN M10 X 1.5 X 20-8.8-A3L		
B	135799	NUT – HEX FLG CTR LOC M10 X 1.5-10-A3L		
C	252284	SCREW – HEX WASHER HD M6 X 1 X 16-450HV-A3L		

46. Includes brackets (MD #291795, 291796), four bolts (MD #136178), and four nuts (MD #135799).

28 Hood Latch Mechanism

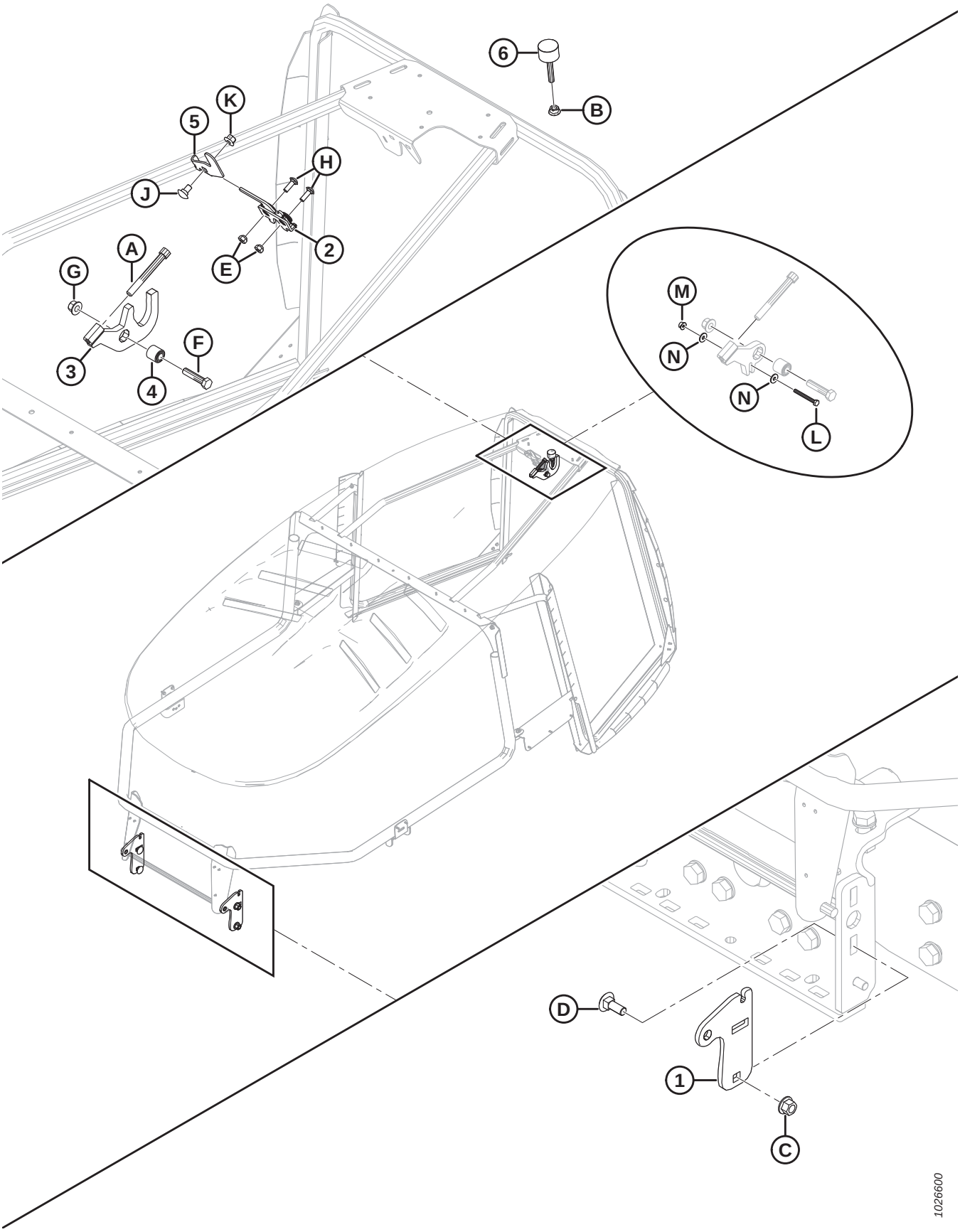

HOOD LATCH MECHANISM

Ref	Part Number	Description	Qty	Serial Number
1	207727	BRACKET – HOOD PIVOT	2	
2	208719	ASSY – STIRRUP LATCH	1	
3	141283	ARM – STRIKER, C/W BUSHING [47]	1	
4	21810	BUSHING – RUBBER	1	
5	205614	LEVER – HOOD RELEASE	1	
6	207430	BUMPER – RUBBER, M10	1	
A	135926	SCREW – HEX SOC HD M12 X 1.75 X 100-12.9-A3L		
B	135927	NUT – HEX SMTH FLG M10 X 1.5-8-A3L		
C	136440	NUT – HEX FLG CTR LOC M16 X 2-10-A3L		
D	136572	BOLT – RHSN M16 X 2 X 45-10.9-A3L		
E	136417	NUT – HEX SPCL M8 X 1.25		
F	152779	BOLT – HEX HD M12 X 1.75 X 55-8.8-A3L		
G	136431	NUT – HEX FLG CTR LOC M12 X 1.75-10-A3L		
H	136824	BOLT – RHSSN M8 X 1.25 X 25-8.8-A2L		
J	136178	BOLT – RHSN M10 X 1.5 X 20-8.8-A3L		
K	135799	NUT – HEX FLG CTR LOC M10 X 1.5-10-A3L		
L	136595	BOLT – HEX HD M6 X 1 X 55-8.8 [48]		–346189
M	152668	NUT – HEX FLG CTR LOC M6 X 1-8-A2L [48]		–346189
N	184706	WASHER – FLAT LARGE M6-200HV [48]		–346189

47. Includes rubber bushing (MD #21810) and screw (MD #135926).
48. Service part only for model year 2018 and prior windrowers with striker arm MD #207130, which has been superseded by striker arm MD #141283.

29 Hood Gas Shocks – Standard

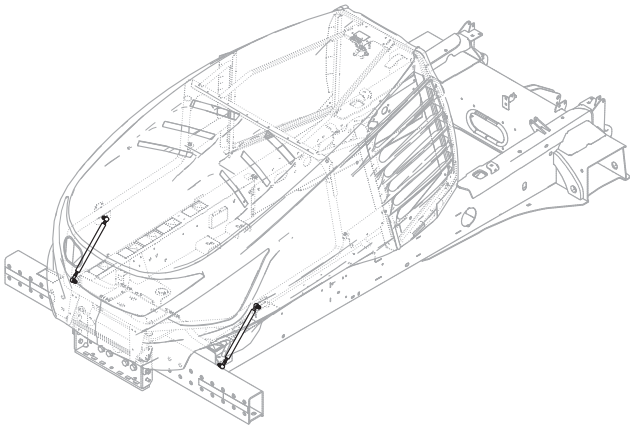

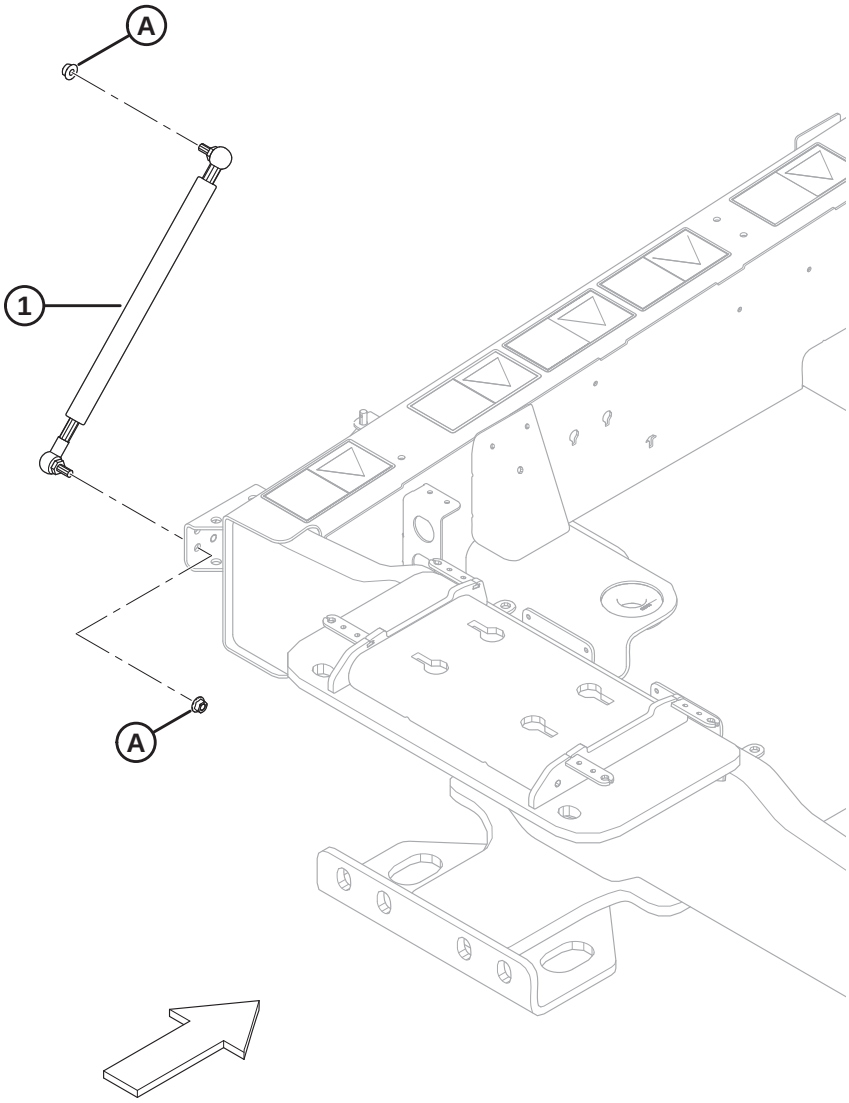

1015301

HOOD GAS SHOCKS – STANDARD

NOTE:

Alternative hood gas shocks are available when optional high debris hood scoops are installed. Refer to Section *115 (Option) High Debris Cooler Intake, page 261*.

Ref	Part Number	Description	Qty	Serial Number
1	209688	SHOCK – GAS, HOOD	2	
A	135927	NUT – HEX SMTH FLG M10 X 1.5-8-A3L		

30 Rear Lights and Bezels

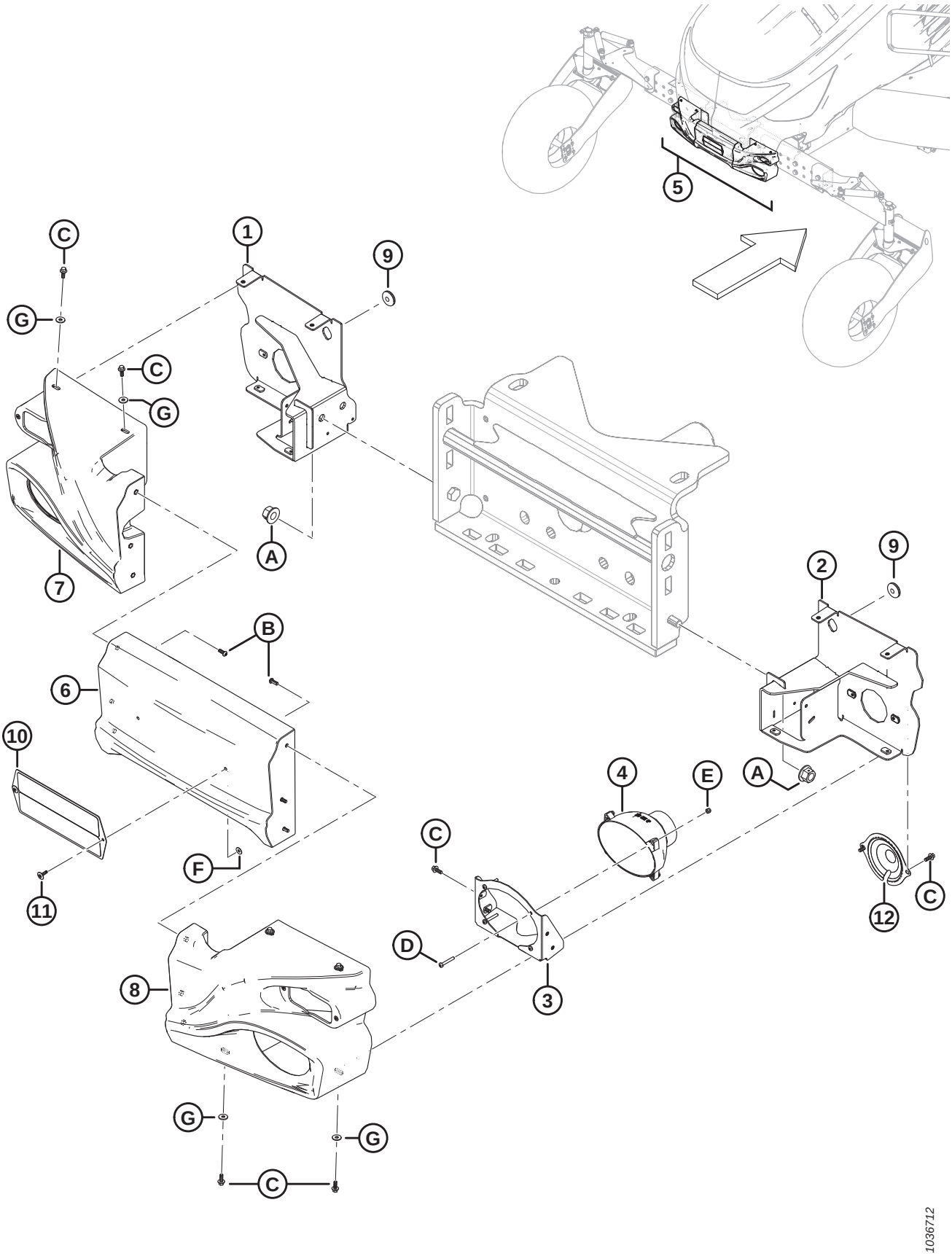

REAR LIGHTS AND BEZELS

Ref	Part Number	Description	Qty	Serial Number
1	310119	SUPPORT – LH REAR LIGHTS WELDT	1	
2	310120	SUPPORT – RH REAR LIGHTS WELDT	1	
3	207970	SUPPORT – HEADLIGHT	2	
4	201888	HEADLIGHT – FLUSH MOUNT [49]	2	
	110267	LIGHT – H4 BULB	2	
5	209856	BEZEL – ASSEMBLY REAR LIGHTS [50]	1	
6	208502	BEZEL – CENTRE BLACK	1	
7	208503	BEZEL – LH BLACK	1	
8	208504	BEZEL – RH BLACK	1	
9	42415	GROMMET – 31.5 MM O.D. X 9.5 MM I.D.	2	
10	209792	ASSEMBLY – REFLECTOR, C/W DECALS [51]	1	
11	136536	RIVET – BLIND 3/16 IN. X 0.5 IN., BLACK	2	
12	291073	COVER – BEZEL LIGHT CONNECTOR	2	
A	136440	NUT – HEX FLG CTR LOC M16 X 2-10-A3L		
B	136886	SCREW – HEX SOC M6 X 1 X 16-10.9-ZB		
C	135959	BOLT – HEX FLG HD M6 X 1 X 16-10.9-A2L		
D	136177	SCREW – PAN HD ISO 7045 M5 X 0.8 X 35-4.8-A2L		
E	197230	NUT – HEX NYLOC M5 X 0.8-8-A2L		
F	184701	WASHER – FLAT LARGE M5-200HV-A2L		
G	184706	WASHER – FLAT LARGE M6-200HV-A2L		

49. Includes bulb (MD #110267).
50. Includes center bezel (MD #208502), LH bezel (MD #208503), RH bezel (MD #208504), and screw (MD #136886).
51. Includes reflectors (MD #115147 and 115145). Refer to Section *106 Decals – Information and Reflectors, page 243*.

31 Cab-Forward Lighting and Marking

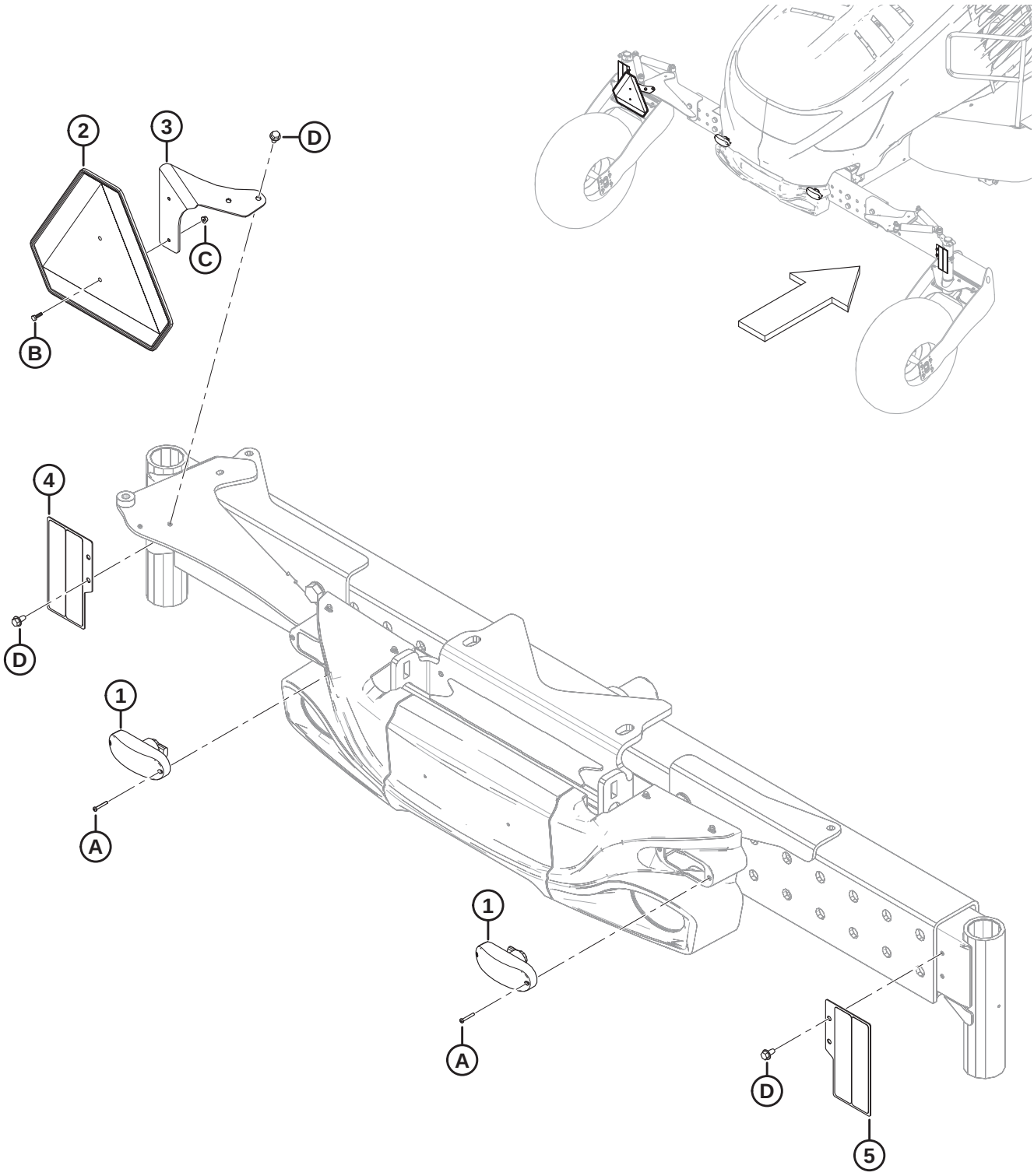

CAB-FORWARD LIGHTING AND MARKING

Ref	Part Number	Description	Qty	Serial Number
1	134079	LIGHT – RED	2	
2	21032	SIGN – METAL, SMV REFLECTOR [52]	1	
	115148	DECAL – SMV		
3	291114	SUPPORT – SMV	1	
4	209802	PLATE – REFLECTOR, LH [53]	1	
5	209803	PLATE – REFLECTOR, RH [53]	1	
A	136177	SCREW – PAN HD ISO 7045 M5 X 0.8 X 35-4.8-A2L		
B	184646	BOLT – HEX HD TFL M6 X 1 X 20-8.8-A2L		
C	152668	NUT – HEX FLG CTR LOC M6 X 1-8-A2L		
D	136209	SCREW – HEX WASHER HD M10 X 1.5 X 20-450HV-A3L		

52. Includes decal (MD #115148).
53. Includes reflectors (MD #115145 and 115147).

32 Roof – Standard and Deluxe Cab

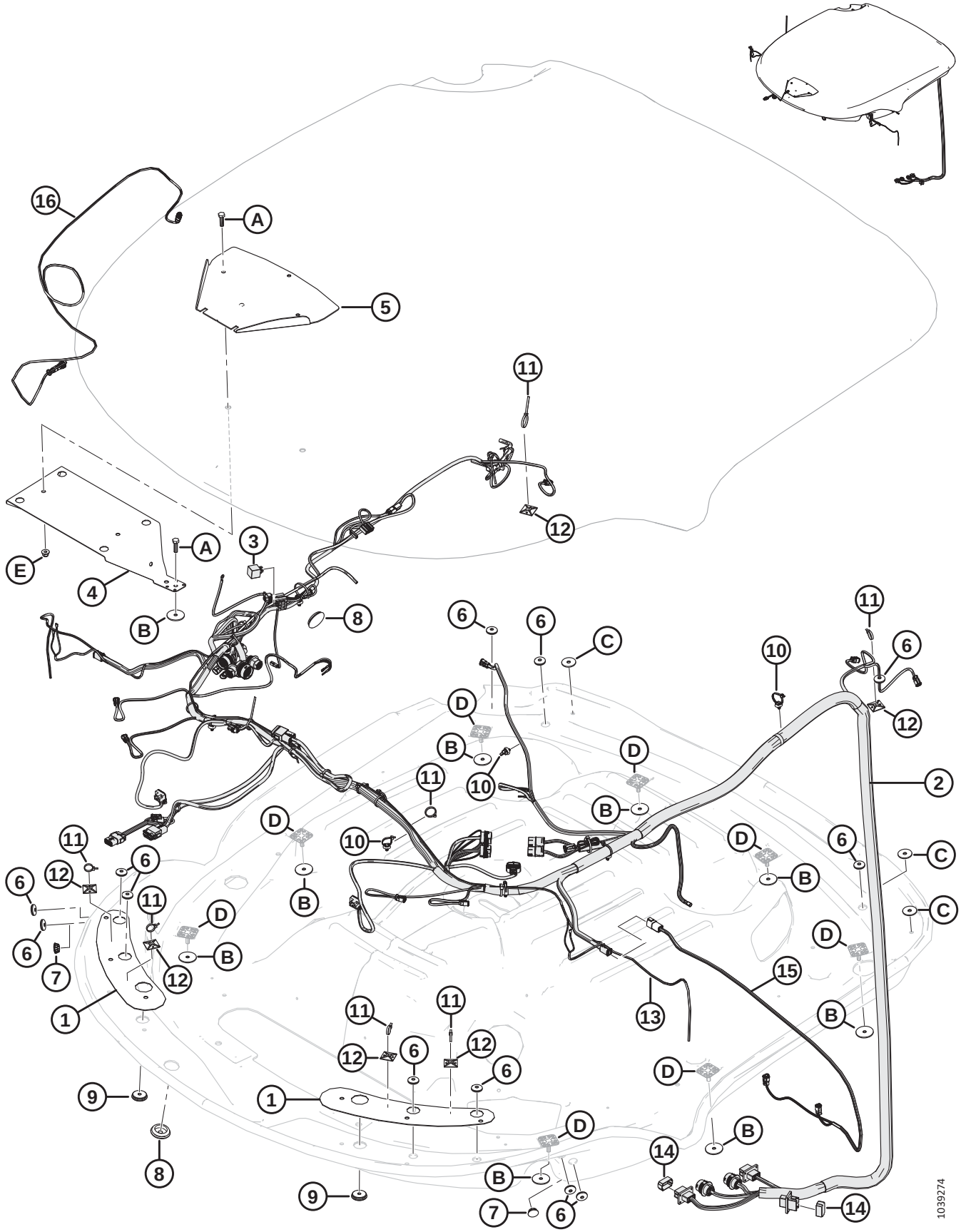

NOTE:

Standard roof assembly (MD #306616) and deluxe roof assembly (MD #306617) include lower roof, upper roof, harnesses, and nav control cable only. For the headliner and roof lighting, refer to Section *34 Headliner – Radio, Speakers, and Relay Module, page 79* and Section *33 Roof – Lighting, page 77*.

Ref	Part Number	Description	Qty	Serial Number
	306616	**ROOF ASSY – STRIPPED STANDARD CAB** [54]		
	306617	**ROOF ASSY – STRIPPED DELUXE CAB** [55]		
	141186	KIT – CHASSIS HARNESS REWORK [56]		
1	201828	PLATE – LIGHTS	2	
2	**309023**	**HARNESS – ROOF (2022 AND PRIOR)** [57]	**1**	**–451189**
	309056	HARNESS – ROOF **(2023 AND LATER)** [57]	**1**	**451190–**
3	30215	RELAY – MINI, 12VDC (GPS)	1	
4	291583	SUPPORT WELDT – ROOF [58]	1	
5	291584	SUPPORT – GPS ANTENNA [58]	1	
6	42415	GROMMET – 31.5 MM O.D. X 9.5 MM I.D.	10-12	
7	200780	PLUG – NYLON, BLACK (STANDARD CAB) [59]	2	
8	183315	PLUG – 1.75 IN. I.D.	2	
9	252237	GROMMET – PLASTIC, 3/8 IN. I.D. X 1.5 IN. O.D.	2	
10	136655	FASTENER – FIR TREE MOUNT WITH CABLE TIE	11	
11	21763	FASTENER – CABLE TIE, BLACK, 160 MM LG	12-19	
12	134572	BASE – MB5, ACRYLIC ADHESIVE MOUNT	6	
13	205396	HARNESS – POWER MIRROR (DELUXE CAB) [60]	1	
14	134782	DUST CAP – RECPT, 12 POS. DT [61]	2	
15	309032	HARNESS – TURN, TAIL, AND BRK LTS [62]	2	396190–
16	309046	CABLE – NAV-900 BROAD REACH	1	421190–
A	252178	BOLT – HEX HD TFL M10 X 1.5 X 35-8.8-BO		

54. Includes lower roof, upper roof, harnesses, and nav control cable only. Standard cab roof (MD #306616) is NOT compatible with model year 2016 and prior chassis harness. When replacing standard cab roof on model year 2016 and prior windrowers, chassis harness rework kit (MD #141186) must be ordered and installed.
55. Includes lower roof, upper roof, harnesses, and nav control cable only. Deluxe cab roof (MD #306617) is NOT compatible with model year 2016 and prior chassis harness. When replacing deluxe cab roof on model year 2016 and prior windrowers, chassis harness rework kit (MD #141186) must be ordered and installed.
56. Rework kit (MD #141186) is used to make chassis harness on model year 2016 and prior windrowers compatible with model year 2017 and later cab roofs and roof harness. Kit includes all required parts, tools, and instructions.
57. Includes mini relay (MD #30215). If replacing the roof harness on model year 2016 and prior windrowers, chassis harness rework kit (MD #141186) must also be ordered and installed. If replacing the roof harness on model year 2020 and prior windrowers, order two turn/tail/brake harnesses (MD #309032) as well. For model year 2022 and prior windrowers, order roof harness (MD #309023) until stock is depleted, then order new roof harness (MD #309056). Roof harness (MD #309056) must be used on model year 2023 and later windrowers.
58. Includes two bolts (MD #252178).
59. Used only for standard cab configuration, when no power mirror harness is present.
60. Harness optional for standard cab.
61. Used to protect GPS bulkhead connectors on roof harness.
62. When servicing 2020 and prior windrowers with new roof harness order two turn/tail/brake harnesses (MD #309032) as well.

ROOF – STANDARD AND DELUXE CAB

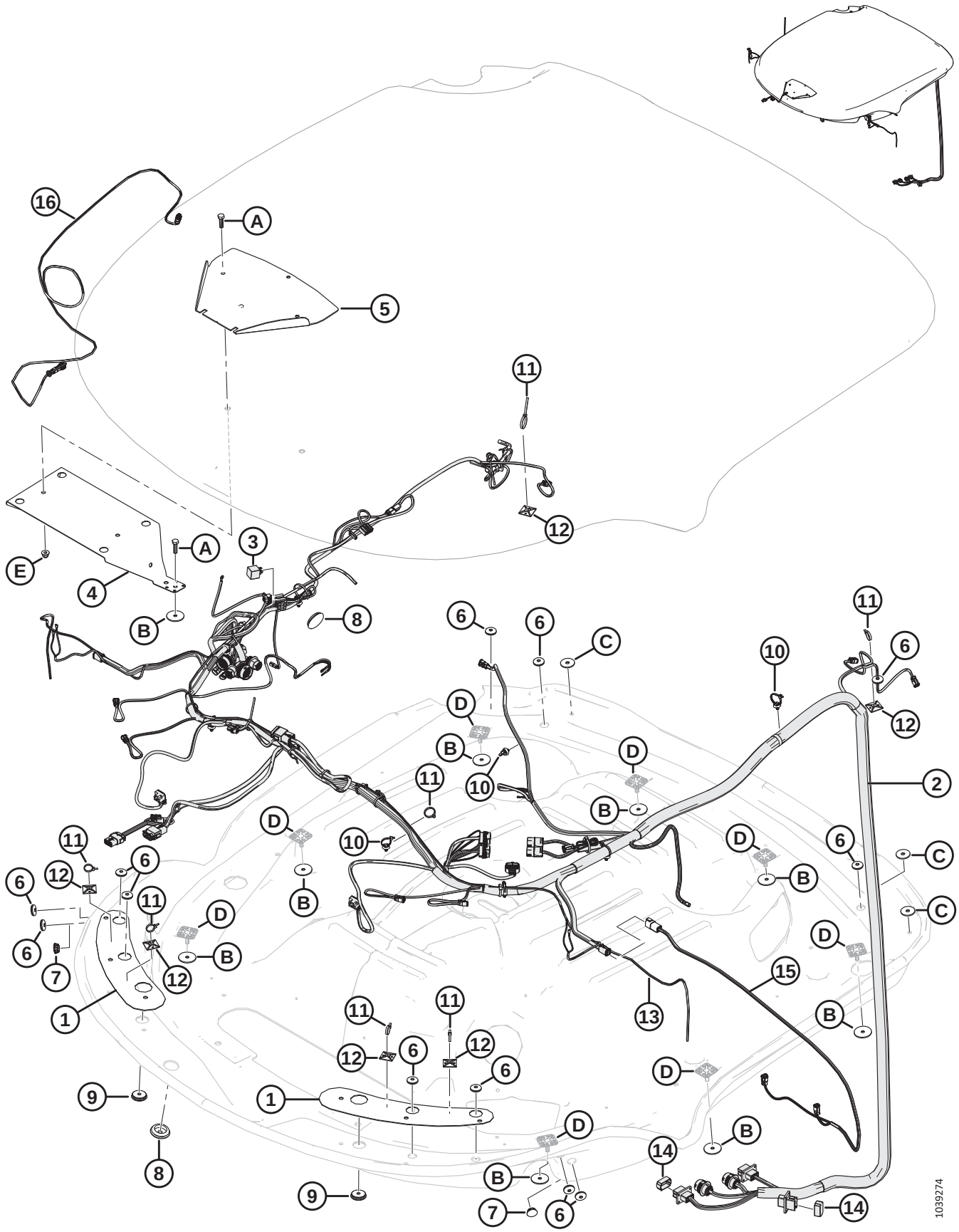

ROOF – STANDARD AND DELUXE CAB

Ref	Part Number	Description	Qty	Serial Number
B	136176	WASHER – RUBBER		
C	136428	WASHER – FLAT LARGE M10-200HV-A3L		
D	REF	BOLT – BONDED TO LOWER ROOF		
E	252807	NUT – HEX FLG NYLOC M10 X 1.5 X SPCL-8-AA1J		

33 Roof – Lighting

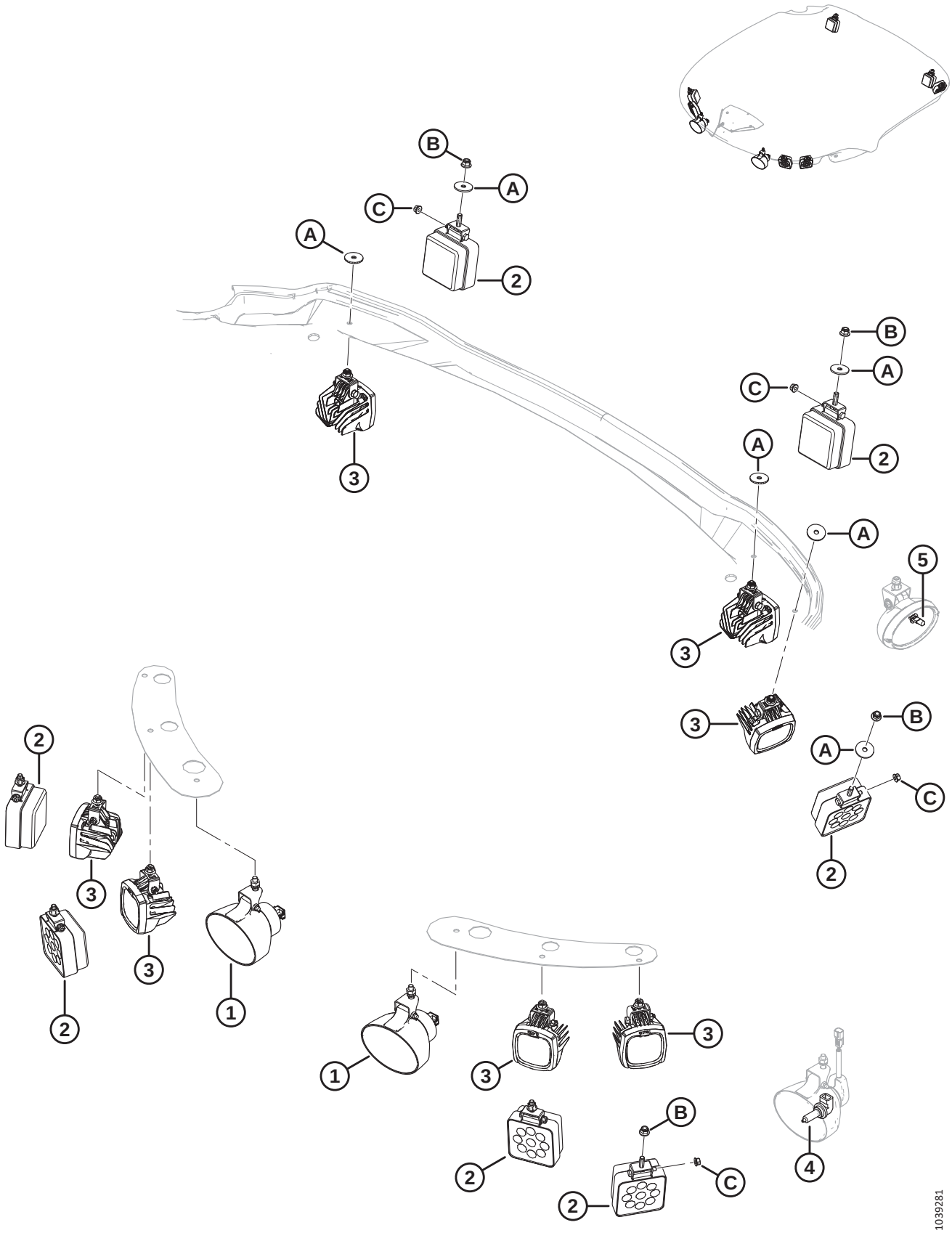

ROOF – LIGHTING

Ref	Part Number	Description	Qty	Serial Number
	B6889	KIT – WINDROWER LIGHTING UPGRADE (8 LED WORKLIGHTS) [63]		
1	201401	HEADLIGHT – PENDANT MOUNT	2	
	110267	LIGHT – H4 BULB 12 VOLT 60/55 WATT		
2	207062	LIGHT – FLOOD LED STANDARD CAB (2020 AND PRIOR) [64]	7	–396189
	306465	LIGHT – FLOOD, LED STANDARD CAB (2021 AND LATER)	7	396190–
3	306182	LIGHT – WORK, LED (DELUXE CAB)	7	
4	**109224**	**LAMP – 9005 BULB (STANDARD CAB)** [65]	**A/R**	
5	**208192**	**BULB – WORK LIGHT (STANDARD CAB)** [66]	**A/R**	
A	136428	WASHER – FLAT LARGE M10-200HV-A3L		
B	252807	NUT – HEX FLG NYLOC M10 X 1.5 X SPCL-8-AA1J		
C	**135337**	**NUT – HEX FLG CTR LK M8 X 1.25-8-AA1J**		

63. Windrower Lighting Upgrade kit (MD #B6889) is optional for standard cab and included with deluxe cab windrowers. Kit includes eight LED flood lights (MD #306182) and instructions. Kits are available through Whole Goods only.
64. Service part only for 2020 and prior windrowers.
65. Service part for superseded halogen work light (MD #201402). Work light (MD #201402) has been superseded by LED light (MD #306465).
66. Service part for superseded halogen work light (MD #201488). Work light (MD #201488) has been superseded by LED light (MD #306465).

34 Headliner – Radio, Speakers, and Relay Module

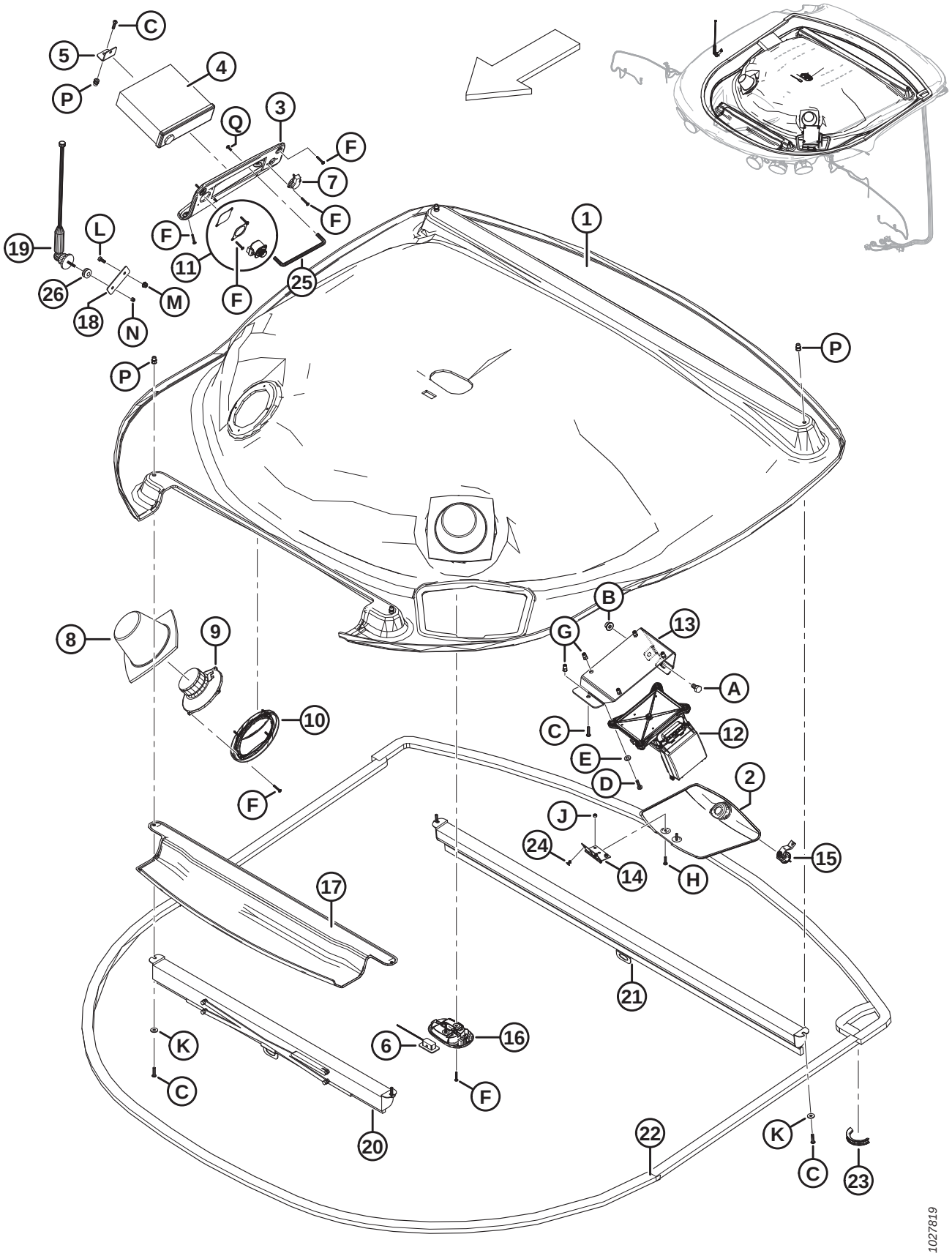

HEADLINER – RADIO, SPEAKERS, AND RELAY MODULE

Ref	Part Number	Description	Qty	Serial Number
1	201750	HEADLINER	1	
2	209918	COVER – RELAY MODULE	1	
3	291503	COVER – RADIO	1	
4	306453	RADIO – BLUETOOTH	1	
5	207128	SUPPORT – RADIO	1	
6	207135	HARNESS – MICROPHONE	1	
7	205890	HARNESS – USB	1	
8	205948	BAFFLE – SPEAKER	2	
9	205065	SPEAKER – RADIO	2	
10	205211	SCREEN – SPEAKER GRILLE	2	
11	252254	PLUG (STANDARD CAB, NOT ILLUSTRATED) [67]	A/R	
	291487	PLATE – COVER, MIRROR SWITCH (STANDARD CAB) [68]	1	
	291486	PLATE – MOUNT, MIRROR SWITCH (DELUXE CAB) [68]	1	
	205892	SWITCH – POWER MIRROR (DELUXE CAB) [68]	1	
12	208160	MODULE – RELAY MODULE, 10 RELAY [69]	1	
13	208685	SUPPORT – RELAY MODULE, WELDMENT [70]	1	
14	204781	HINGE – BUTT	1	
15	204787	LATCH – CAM	1	
16	201707	LIGHT – DOME	1	
	208191	BULB – DOME LIGHT		
17	206071	COVER – ROOF	1	
18	205929	PLATE – WELDT ANTENNA GROUND [71]	1	
19	201710	ANTENNA – RADIO C/W CABLE	1	
	208245	ANTENNA – MAST ONLY		
20	291490	SHADE – FRONT WINDOW	1	
21	291489	SHADE – REAR WINDOW	1	
22	201522	SEAL – FOAM, 6500 MM LG ±15	1	
23	194082	MOULDING – 80 MM LG	1	
24	113799	RIVET – POP	4	
25	160414	HANDLE – RADIO SUPPORT	1	
26	293129	GROMMET – 3/16 ID, 9/32 OD	1	
A	136148	BOLT – HEX HD TFL M10 X 1.5 X 20-8.8-BO		
B	135799	NUT – HEX FLG CTR LOC M10 X 1.5-10-A3L		
C	252236	SCREW – HEX SOC M6 X 1 X 25-10.9-ZB		
D	136252	SCREW – PAN HD M6 X 1 X 25-4.8-H-A2L		
E	184708	WASHER – FLAT M8-200HV-A2L		
F	252235	SCREW – PAN HD # 8 X 1 LG ZP		

67. Service part only for windrowers with standard roof assemblies and discontinued radio cover (MD #206072). For units that have been serviced with radio cover (MD #291503), order cover plate (MD #291487).
68. For windrowers with standard roof assemblies, order cover plate (MD #291487). For windrowers with deluxe roof assemblies, order switch mount plate (MD #291486) and power mirror switch (MD #205892).
69. For service parts, refer to Section *35 Roof Relay Module – Service Parts, page 83*.
70. Includes bolt (MD #136148).
71. Includes bolt (MD #136707), which is welded in place.

HEADLINER – RADIO, SPEAKERS, AND RELAY MODULE

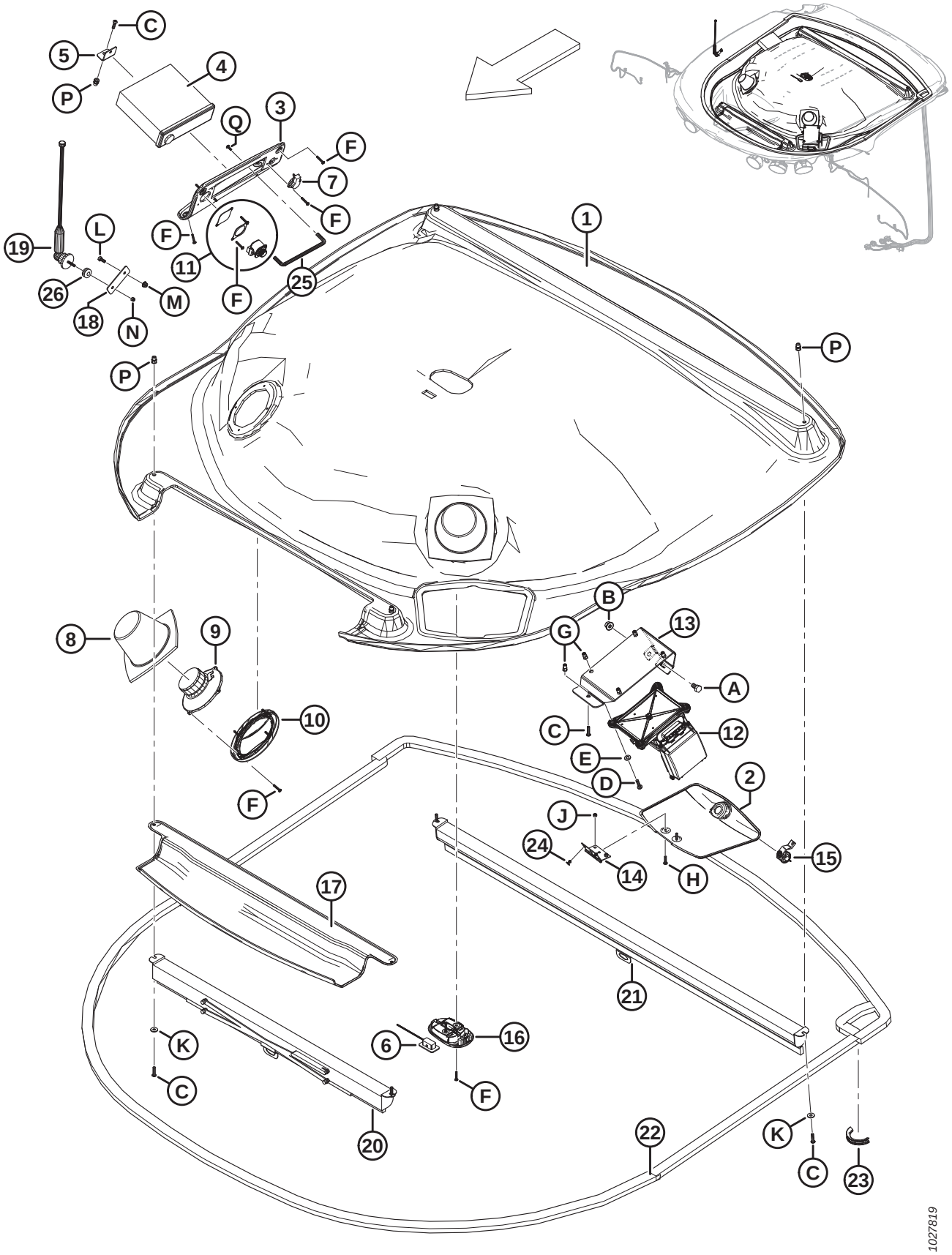

Ref	Part Number	Description	Qty	Serial Number
G	252234	RIVNUT – M6 X 1.0 HEX 3.0-5.5		
H	252203	SCREW – PAN HD ISO 7045 M5 X 0.8 X 20-SS-PLN		
J	184682	NUT – HEX M5 X 0.8-6-A2L		
K	184706	WASHER – FLAT LARGE M6-200HV-A2L		
L	136707	BOLT – HEX HD M6 X 1 X 16-8.8-BLK		
M	152668	NUT – HEX FLG CTR LOC M6 X 1-8-A2L		
N	197230	NUT – HEX NYLOC M5 X 0.8-8-A2L		
P	252585	RIVNUT – M6 X 1.0 HEX 4.2-6.6 [72]		
Q	109918	SCREW – MACHINE PHILLIPS #8 NC X 0.5 LG GR 2		

72. Used on the front and rear window shades and radio support.

35 Roof Relay Module – Service Parts

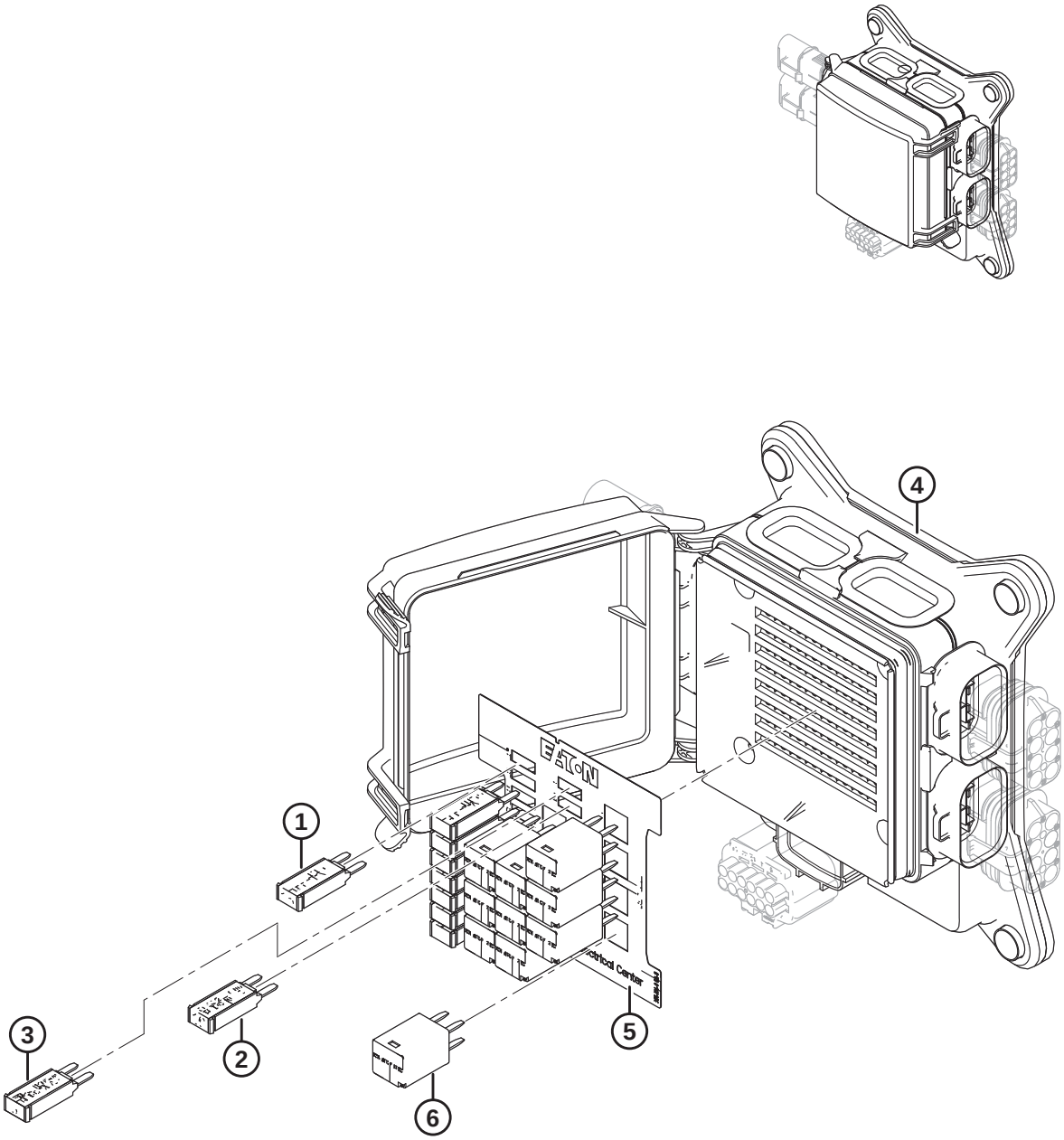

1023042

ROOF RELAY MODULE – SERVICE PARTS

Ref	Part Number	Description	Qty	Serial Number
	208160	MODULE – RELAY MODULE, 10 RELAY [73]		
1	134452	BREAKER – S21, MINI, 15 AMP, TYPE 1	8	
2	134451	BREAKER – S21, MINI, 10 AMP, TYPE 1	1	
3	134679	BREAKER – S21, MINI, 5 AMP, TYPE 1	1	
4	NSS	MODULE – RELAY MODULE, 10 RELAY	1	
5	NSS	DECAL – RELAY MODULE, 10 RELAY	1	
6	134458	RELAY – ULTRA MICRO, ISO SPST	10	

73. Refer to Section *34 Headliner – Radio, Speakers, and Relay Module, page 79*.

36 Cab GPS Bulkhead/Display Mount

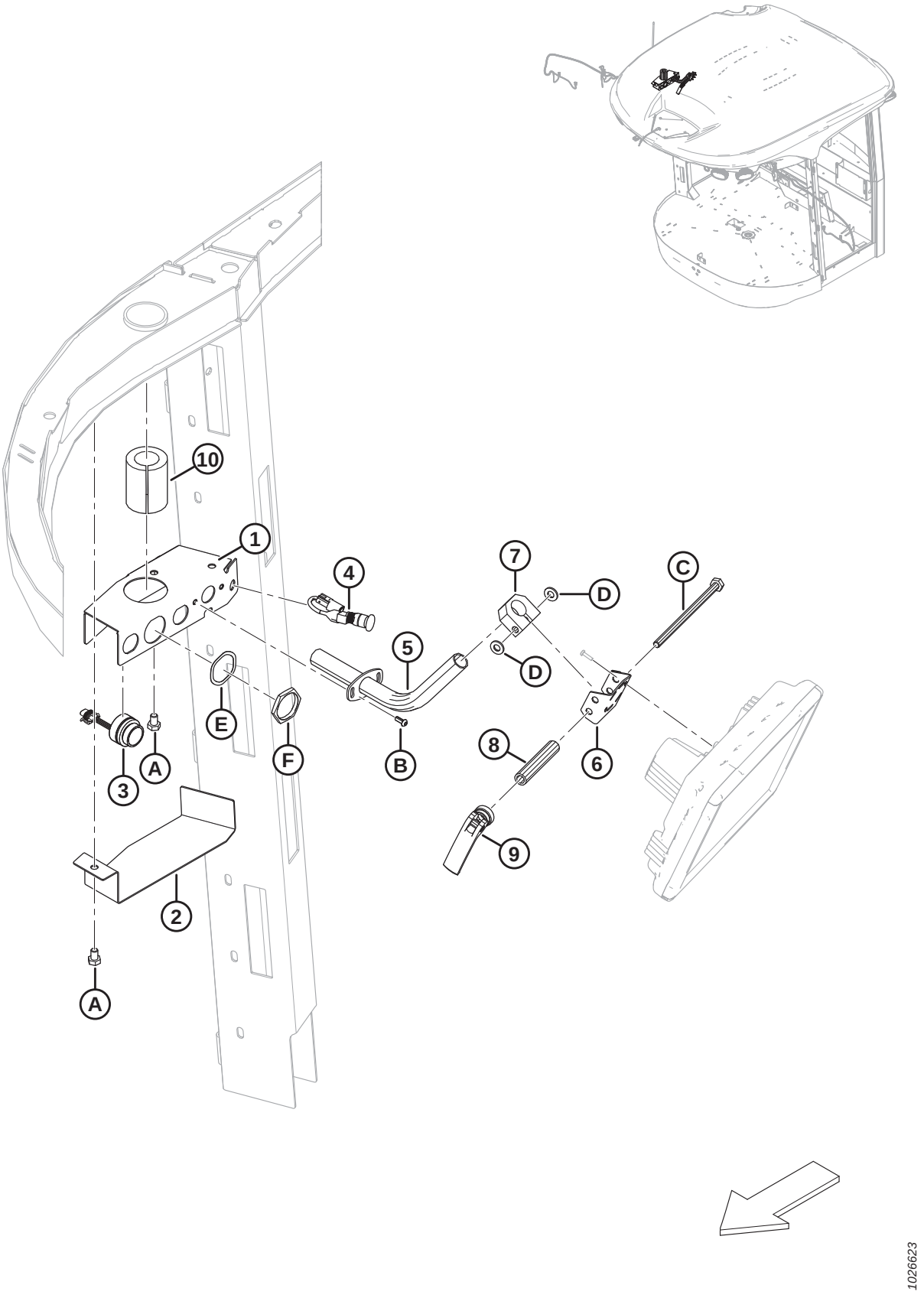

CAB GPS BULKHEAD/DISPLAY MOUNT

Ref	Part Number	Description	Qty	Serial Number
1	306012	PANEL WELDT – GPS BULKHEAD	1	
2	306177	COVER – GPS BULKHEAD	1	
3	183316	BUZZER – SONALERT	1	
4	134929	SWITCH – EMERGENCY STOP, OPERATOR, RED	1	
5	306013	TUBE WELDT – GPS DISPLAY	1	
6	205595	SUPPORT WELDT GPS DISPLAY	1	
7	306097	CLAMP – GPS DISPLAY	1	
8	205598	SPACER – GPS DISPLAY	1	
9	136696	LEVER	1	
10	NSS	FOAM – INSULATOR	1	
A	50071	BOLT – HEX HD TFL M10 X 1.5 X 15-8.8-A3L		
B	136886	SCREW – HEX SOC M6 X 1 X 16-10.9-ZB		
C	158658	BOLT – HEX HD M10 X 1.5 X 180-10.9-A3L		
D	30655	WASHER – HARD ASTM F436 M10-340HV-AB2C		
E	134730	WASHER – LOCK, HDP20, SIZE 24		
F	134728	NUT – PANEL, HDP20, SIZE 24		

37 Cab Interior and Upholstery

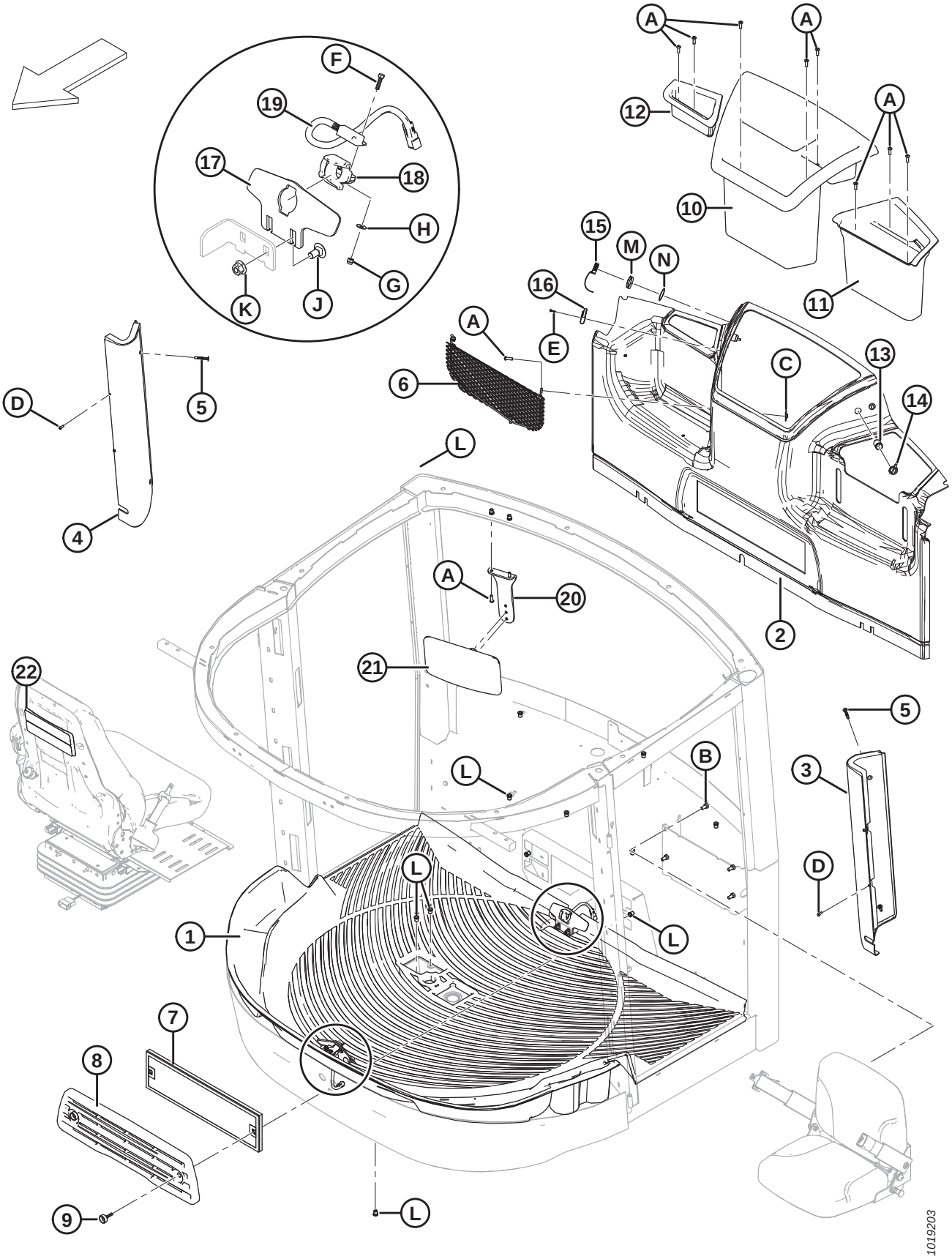

CAB INTERIOR AND UPHOLSTERY

Ref	Part Number	Description	Qty	Serial Number
1	208239	MAT – FLOOR BROWN	1	396190–
	208238	MAT – FLOOR BLACK [74]	1	–396189
2	207191	PANEL ASSEMBLY – REAR	1	
3	207148	PANEL ASSEMBLY – LH POST	1	
4	207149	PANEL ASSEMBLY – RH POST	1	
5	252613	CHRISTMAS TREE CLIP	4	
6	207570	HOLDER – STORAGE MESH	1	
7	109797	CLEANER – RECIRC AIR ELECTROSTATIC	1	
8	207554	COVER – RECIRCULATION	1	
9	205579	KNOB – M8 X 1.25 X 30 LG	2	
10	203550	CONTAINER – CENTRE	1	
11	203551	CONTAINER – LEFT	1	
12	209917	CONTAINER – RIGHT	1	
13	109080	TERMINAL – POWER OUTLET	3	
14	109081	CAP – POWER OUTLET	3	
15	134777	CAP – DIAGNOSTIC PORT	1	
16	134778	CAP – POWER SUPPLY, SWITCHED AND UNSWITCHED	1	
17	208107	PLATE – LATCH	2	
18	202230	INSERT – LATCH PLATE	2	
19	200974	SWITCH – SEAT	2	
20	202721	SUPPORT – MIRROR INTERIOR	1	
21	208371	MIRROR – INTERIOR REAR VIEW	1	
22	209476	ASSEMBLY – REFLECTOR SEAT	1	
A	184649	SCREW – HEX SOC BTN HD M8 X 1.25 X 25-12.9-A2L		
B	184661	BOLT – HEX HD TFL M10 X 1.5 X 30-8.8-AA1J		
C	252201	NUT – M8 SPECIAL		
D	136886	SCREW – HEX SOC M6 X 1 X 16-10.9-ZB		
E	30492	SCREW – PHILIPS PAN HD #8 X 3/4 LG ZP		
F	184640	BOLT – HEX HD M5 X 0.8 X 20-8.8-A2L		
G	197230	NUT – HEX NYLOC M5 X 0.8-8-A2L		
H	184701	WASHER – FLAT LARGE M5-200HV-A2L		
J	136178	BOLT – RHSN M10 X 1.5 X 20-8.8-A3L		
K	135799	NUT – HEX FLG CTR LOC M10 X 1.5-10-A3L		
L	252179	NUT – RIV M8 X 1.25 HEX X 0.7-3.8		
M	134727	NUT – PANEL, HDP20, SIZE 18		
N	134729	WASHER – LOCK, HDP20, SIZE 18		

74. Service part only for machines made in model year 2020 and prior.

38 Cab Exterior and Air Intake Stack

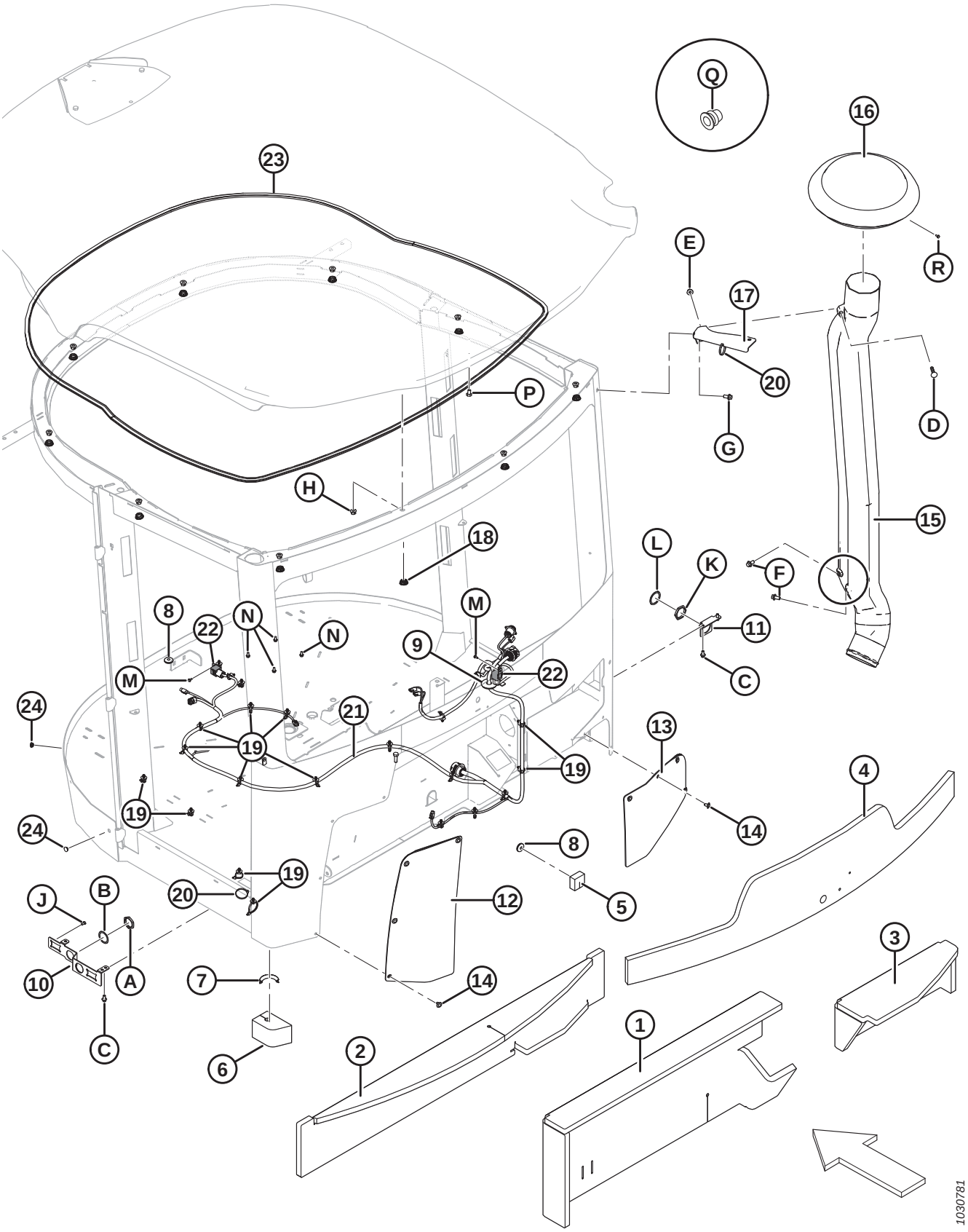

CAB EXTERIOR AND AIR INTAKE STACK

Ref	Part Number	Description	Qty	Serial Number
1	201859	INSULATOR – REAR LOWER	1	
2	141205	INSULATOR – REAR UPPER [75]	1	
3	201886	INSULATOR – REAR RIGHT	1	
4	204184	INSULATOR – REAR GLASS	1	
5	205191	SEAL – REAR	1	
6	205190	SEAL – CORNER POST	1	
7	194082	MOULDING – 80 MM LG	1	
8	42415	GROMMET – 31.5 MM O.D. X 9.5 MM I.D.	2	
9	252170	GROMMET – PLASTIC, 17 MM I.D. X 2 IN. O.D.	1	
10	209841	SUPPORT – HARNESS	1	
11	207230	SUPPORT – HARNESS	1	
12	207400	FLAP ASSY – LEFT	1	
13	207401	FLAP ASSY – RIGHT	1	
14	252189	FASTENER – SNAP RIVET	8	
15	202604	DUCT – AIR [76]	1	
16	201838	DUCT – AIR INLET	1	
17	205262	BRACKET – AIR DUCT, FLOOD LIGHT	1	
18	200780	PLUG	10	
19	136655	FASTENER – FIR TREE MOUNT WITH CABLE TIE	22	
20	21763	FASTENER – CABLE TIE, BLACK, 160 MM LG	2	
21	207291	HARNESS – CAB, LOWER [77]	1	
	500470	CONNECTOR – DEUT, DT, 3/M, J1939 (CAN TERMINATOR)		
22	134706	RELAY – MINI, WITH MOUNTING BRACKET (WIPERS)	A/R	
23	201757	SEAL – HEADLINER TRIM	1	
24	252968	PLUG – PRONGS .500 DIA BLACK	4	
A	134727	NUT – PANEL, HDP20, SIZE 18		
B	134729	WASHER – LOCK, HDP20, SIZE 18		
C	136485	BOLT – HEX FLG HD TFL M8 X 1.25 X 16-8.8-A3L		
D	184658	BOLT – RHSSN M10 X 1.5 X 50-8.8-A3L		
E	184692	NUT – HEX NYLOC M10 X 1.5-8-A3L		
F	152670	BOLT – HEX FLG HD M10 X 1.5 X 20 X SPCL-8.8-A3L		
G	152655	BOLT – HEX FLG HD M10 X 1.5 X 20-8.8-A3L		
H	135799	NUT – HEX FLG CTR LOC M10 X 1.5-10-A3L		
J	252247	SCREW – PAN HD #12-14 X 1/2-RC45-ZP		
K	134728	NUT – PLASTIC, DEUTSCH, HDP, SIZE 24		
L	134011	WASHER – LOCK SPRING, DEUTSCH HD, SIZE 24		
M	42292	SCREW – SELF TAPPING HEX WASH HD #10 X 1/2 ZP		
N	21055	SCREW – SELF TAP HEX WASH HD 1/4 NC X 1/2 [78]		
P	50071	BOLT – HEX HD TFL M10 X 1.5 X 15-8.8-A3L		

75. Rear upper insulator received in three pieces for easier installation.
76. Includes two riv nuts (MD #232271).
77. Includes mini relay (MD #134706).
78. Installed as placeholders. Used to hold GPS module for windrowers equipped with Trimble Autopilot.

CAB EXTERIOR AND AIR INTAKE STACK

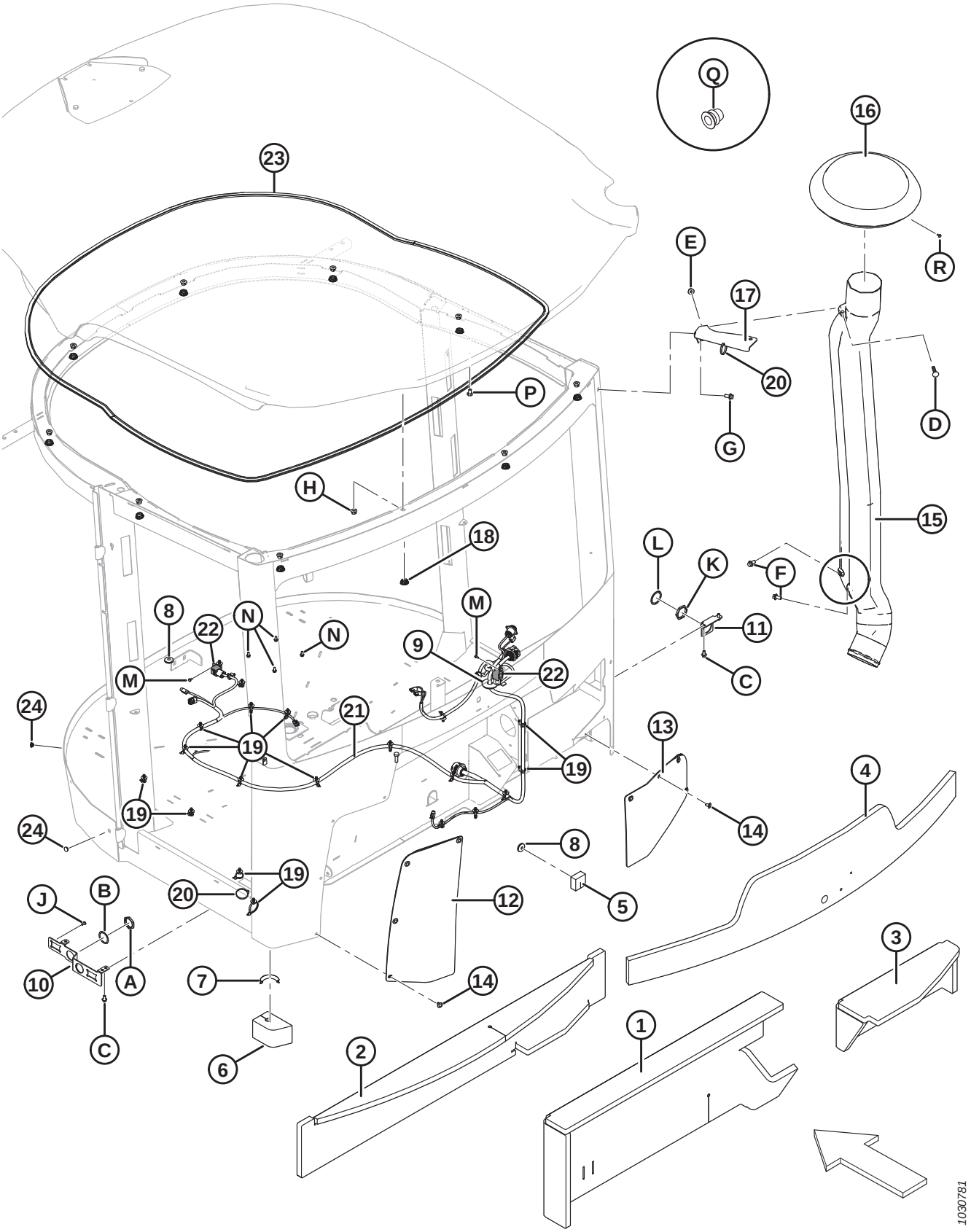

CAB EXTERIOR AND AIR INTAKE STACK

Ref	Part Number	Description	Qty	Serial Number
Q	232271	NUT – RIV M10 X 1.5 RND 3.8-7.9		
R	42292	SCREW – SELF TAPPING HEX WASH HD #10 X 1/2 ZP		

39 Cab Suspension

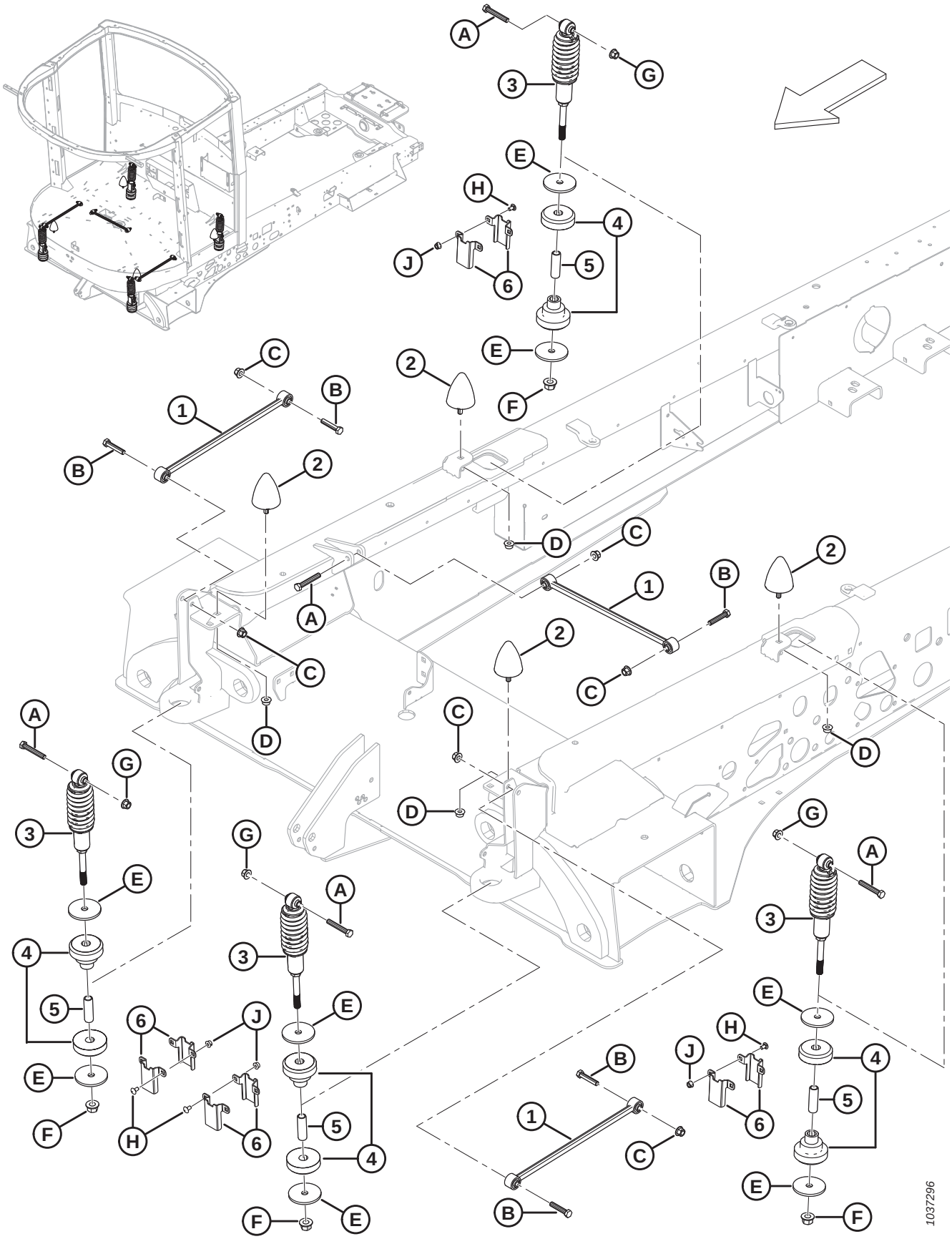

CAB SUSPENSION

Ref	Part Number	Description	Qty	Serial Number
1	183209	MEMBER – STABILIZING [79]	3	
	306692	**ASSY – STABILIZER LINK** [79]	**3**	
2	208083	BUMPER – RUBBER	4	
3	205950	DAMPENER – CAB	4	
4	166530	INSULATOR	4	
5	166539	SPACER – 16.66 MM I.D., 23.38 MM O.D., 72.7 MM LG	4	
6	291430	SUPPORT – CAB SHOCK CHANNEL	8	
A	135155	BOLT – HEX HD M12 X 1.75 X 75-8.8-A3L		
B	152274	BOLT – HEX HD M12 X 1.75 X 60-8.8-A3L		
C	136431	NUT – HEX FLG CTR LOC M12 X 1.75-10-A3L		
D	136036	NUT – HEX SMTH FLNG M12 X 1.75-8-A3L		
E	206946	WASHER – FLAT		
F	136440	NUT – HEX FLG CTR LOC M16 X 2-10-A3L		
G	136431	NUT – HEX FLG CTR LOC M12 X 1.75-10-A3L		
H	191489	BOLT – RHSSN TFL M8 X 1.25 X 16-8.8-A2L		
J	135337	NUT – HEX FLG CTR LOC M8 X 1.25-8-A2L		

79. Stabilizer (MD #183209) has been discontinued by the supplier. Order stabilizer (MD #183209) until stock is depleted, then order stabilizer (MD #306692).

40 Windows

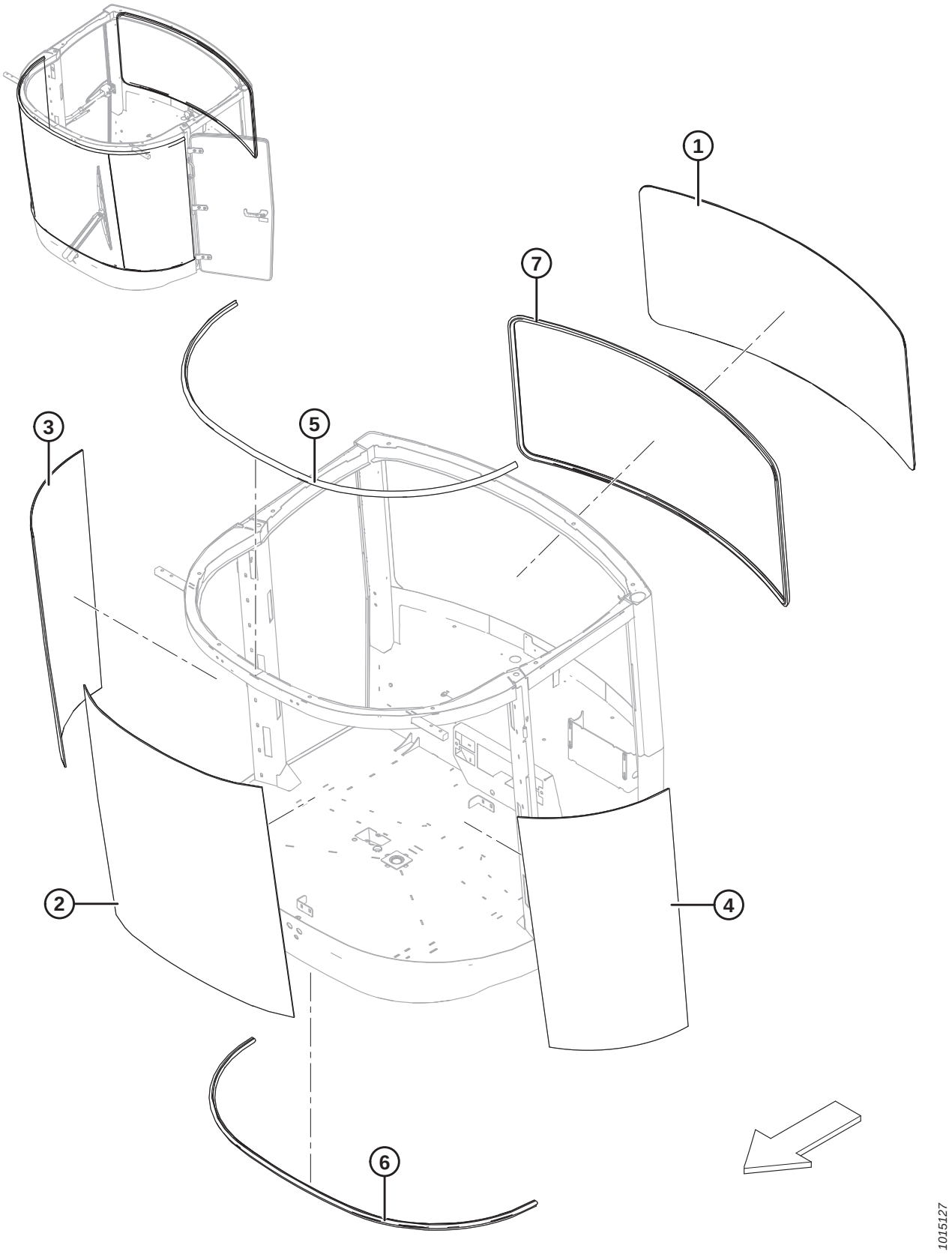

WINDOWS

Ref	Part Number	Description	Qty	Serial Number
1	346132	WINDOW – REAR	1	
2	306600	WINDOW – FRONT	1	
3	306601	WINDOW – FRONT RIGHT	1	
4	306602	WINDOW – FRONT LEFT	1	
5	200783	SEAL – WINDOW TOP	1	
6	200784	SEAL – WINDOW BOTTOM	1	
7	200890	SEAL – WINDOW REAR	1	

41 Doors

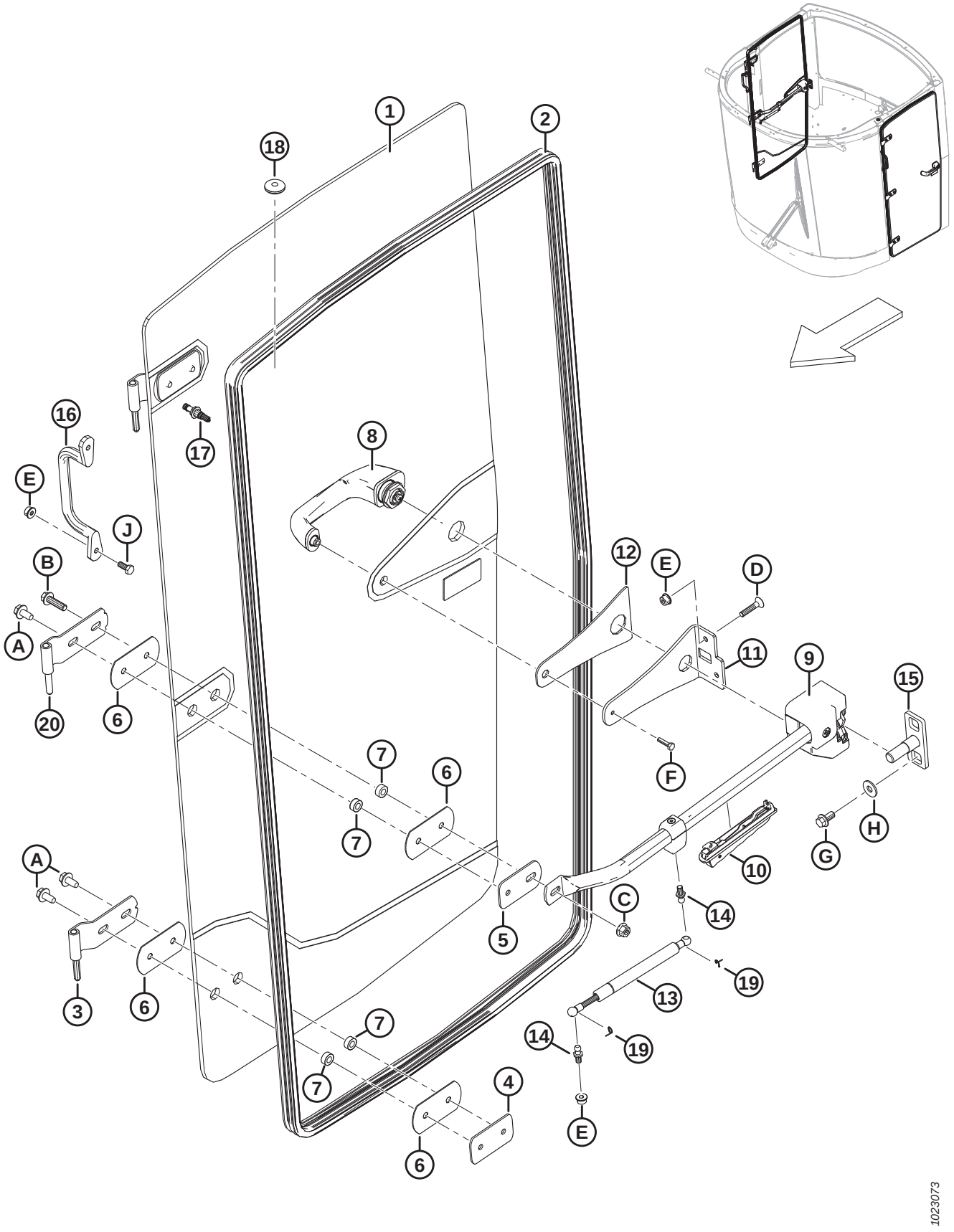
1
2
18
16
17
8
E
J
B
A
20
6
12
E
D
11
9
15
7
6
F
7
H
G
10
A
C
14
5
19
3
6
13
7
14
19
7
4
E
6
1023073

DOORS

Ref	Part Number	Description	Qty	Serial Number
1	208254	DOOR – GLASS LH C/W DECAL [80]	1	
	208255	DOOR – GLASS RH C/W DECAL [80]	1	
2	208125	SEAL – DOOR, LH, 4420 MM LG	1	
	208124	SEAL – DOOR, RH, 4317 MM LG	1	
3	208135	HINGE – LEFT DOOR	2	
	208134	HINGE – RIGHT DOOR	2	
4	201693	BAR – HINGE BACKING	4	
5	202041	BAR – CENTER HINGE BACKING	2	
6	109598	GASKET – HINGE	12	
7	109585	SPACER – 19.05 MM O.D., 10.24 MM I.D., 7.92 MM LG	12	
8	207709	HANDLE – OUTSIDE CAB	2	
	134717	KEY – DOOR		
9	201595	LATCH – LH CAB DOOR [81]	1	
	201596	LATCH – RH CAB DOOR [81]	1	
10	139971	BEZEL – DOOR HANDLE	2	
11	109822	SUPPORT – LEFT LATCH	1	
	109740	SUPPORT – RIGHT LATCH	1	
12	206248	GASKET – DOOR LATCH	2	
13	203847	SPRING – GAS	2	
14	136188	STUD – BALL (10 MM), M8 THREAD	4	
15	306596	CATCH – DOOR, WELDMENT	2	
16	203860	HANDLE	2	
17	209613	SWITCH – DOOR, CAB	2	
18	42415	GROMMET – 31.5 MM O.D. X 9.5 MM I.D.	2	
19	209787	CLIP – RETAINING, GAS SPRING	4	
20	208145	HINGE – LEFT DOOR, CENTER	1	
	208144	HINGE – RIGHT DOOR, CENTER	1	
A	136209	SCREW – HEX WASHER HD M10 X 1.5 X 20-450HV-A3L		
B	136211	BOLT – HEX FLG HD M10 X 1.5 X 35-8.8-A3L		
C	135799	NUT – HEX FLG CTR LOC M10 X 1.5-10-A3L		
D	136212	SCREW – HSH CSK M8 X 1.25 X 40-A2L		
E	135337	NUT – HEX FLG CTR LOC M8 X 1.25-8-A2L		
F	135301	BOLT – HEX HD M6 X 1 X 25-8.8-A2L		
G	152655	BOLT – HEX FLG HD M10 X 1.5 X 20-8.8-A3L		
H	30635	WASHER – FLAT REG M10-STL-SOFT-A2L		
J	30715	BOLT – HEX HD TFL M8 X 1.25 X 20-8.8-A2L		

80. Includes decal (MD #166454).
81. Includes bezel (MD #139971).

42 Wipers

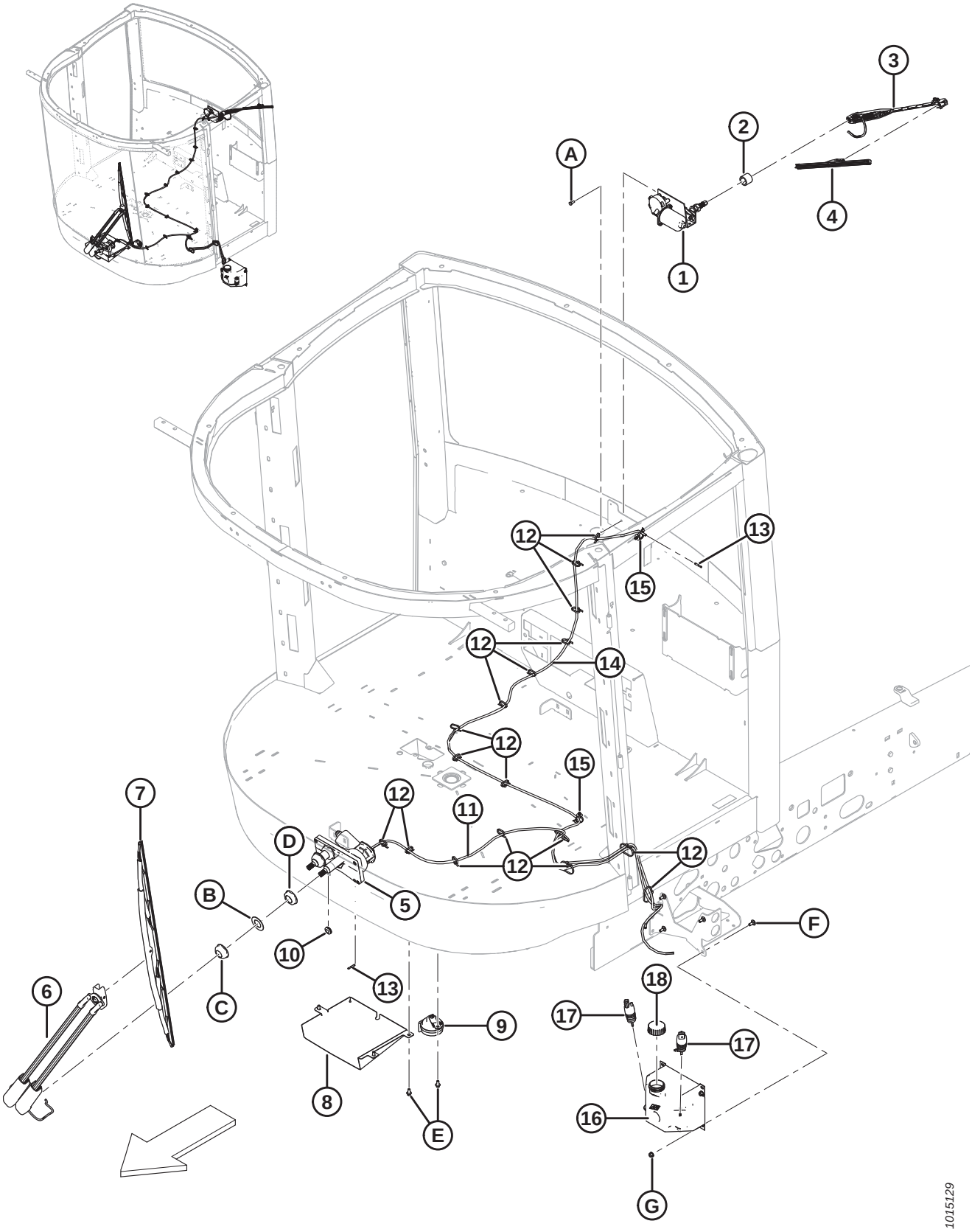

WIPERS

Ref	Part Number	Description	Qty	Serial Number
1	201760	MOTOR – WIPER TAPERED SPLINE [82]	1	
2	205572	GROMMET – REAR WIPER	1	
3	207209	ARM – WIPER 550 MM SADDLE WET	1	
4	207210	BLADE – WIPER FRAMELESS	1	
5	306539	MOTOR – WIPER DUAL DRIVE [83]	1	
6	202586	ARM – WIPER 915 MM WET	1	
7	202584	BLADE – WIPER 990 MM	1	
8	205195	COVER – FRONT WIPER MOTOR	1	
9	160373	HORN	1	
10	112824	GROMMET – 14.3 MM I.D., 27 MM O.D.	1	
11	205739	HOSE – WASHER CAB FORWARD, 3.9 MM I.D., 1900 MM LG	1	
12	21763	FASTENER – CABLE TIE, BLACK, 160MM LG	13	
13	204379	FITTING – BARBED STRAIGHT	2	
14	208089	HOSE – WASHER ENG. FORWARD, 3.9 MM I.D., 3510 MM LG	1	
15	136655	FASTENER – FIR TREE MOUNT WITH CABLE TIE	2	
16	206066	ASSY – W/ SHIELD WASHER TANK [84]	1	
17	204373	PUMP – W/ SHIELD WASHER	2	
18	204374	CAP – W/ SHIELD WASHER TANK	1	
A	184642	BOLT – HEX HD TFL M6 X 1 X 16-8.8-A2L		
B	208190	WASHER – WIPER COSMETIC		
C	208189	NUT – SPECIAL WIPER COSMETIC		
D	202264	NUT – WIPER MOTOR		
E	136485	BOLT – HEX FLG HD TFL M8 X 1.25 X 16-8.8-A3L		
F	197171	BOLT – RHSN M8 X 1.25 X 20-8.8-A2L		
G	135337	NUT – HEX FLG CTR LOC M8 X 1.25-8-A2L		

82. Includes grommet (MD #205572).
83. Includes washer (MD #208190) and nut (MD #208189).
84. Includes pumps (MD #204373) and cap (MD #204374).

43 Mirror Arms, Beacons, and Reflectors

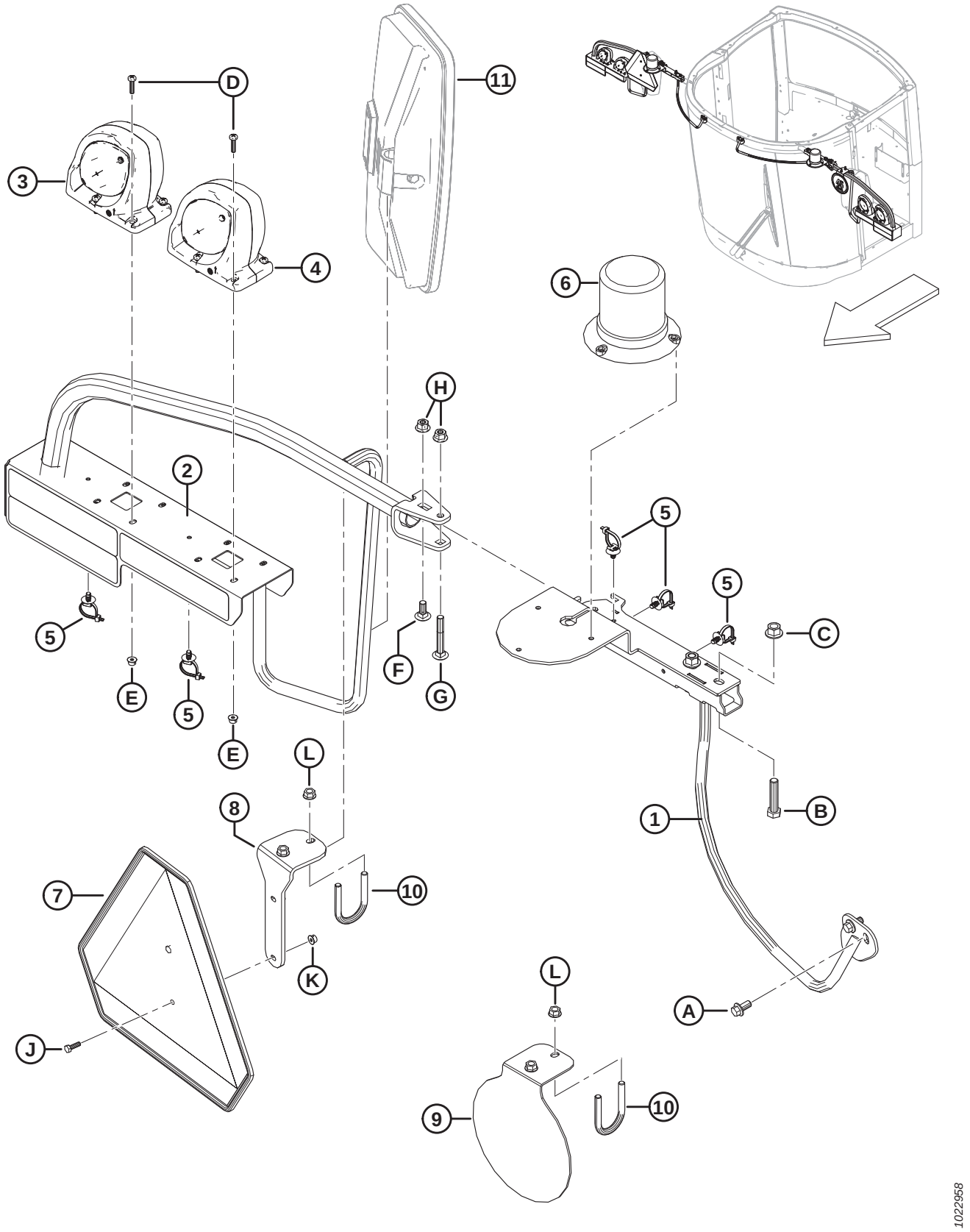

MIRROR ARMS, BEACONS, AND REFLECTORS

Ref	Part Number	Description	Qty	Serial Number
1	209930	SUPPORT – GRAB RAIL WELDT LH	1	
	209931	SUPPORT – GRAB RAIL WELDT RH	1	
2	209991	ASSY – MIRROR ARM AND DECALS LH [85]	1	
	209989	ASSY – MIRROR ARM AND DECALS RH [85]	1	
3	203548	LAMP – LH TAIL [86]	1	
	203549	LAMP – RH TAIL [86]	1	
4	203547	LAMP – CLEARANCE [87]	2	
5	136655	FASTENER – FIR TREE MOUNT WITH CABLE TIE	10	
6	167884	LIGHT – BEACON, LED	2	
7	21032	SIGN – METAL, SMV REFLECTOR (RH) [88]	1	
	115148	DECAL – SMV		
8	291113	SUPPORT – SMV (RH)	1	
9	291038	BRACKET – SPEED ID SYMBOL (LH) [89]	1	
10	291724	U-BOLT – 3/8-16, AA1J	2	
11	REF	MIRROR [90]	2	
A	152655	BOLT – HEX FLG HD M10 X 1.5 X 20-8.8-A3L		
B	152779	BOLT – HEX HD M12 X 1.75 X 55-8.8-A3L		
C	136431	NUT – HEX FLG CTR LOC M12 X 1.75-10-A3L		
D	136252	SCREW – PAN HD M6 X 1 X 25-4.8-H-A2L		
E	152668	NUT – HEX FLG CTR LOC M6 X 1-8-A2L		
F	135785	BOLT – RHSN M10 X 1.5 X 25-8.8-A3L		
G	136495	BOLT – RHSN M10 X 1.5 X 70-8.8-A3L		
H	135799	NUT – HEX FLG CTR LOC M10 X 1.5-10-A3L		
J	184646	BOLT – HEX HD TFL M6 X 1 X 20-8.8-A2L		
K	152668	NUT – HEX FLG CTR LOC M6 X 1-8-A2L		
L	30228	NUT – FLANGE DT SMOOTH FACE 0.375-16 UNC		

85. Includes reflectors (MD #115145, 115146, and 115147). Refer to Section *106 Decals – Information and Reflectors, page 243*.
86. Includes red lens (MD #139631) and black lens (MD #139632).
87. Includes amber lens (MD #139630).
88. Includes decal (MD #115148).
89. For decals, refer to Section *106 Decals – Information and Reflectors, page 243*.
90. For windrowers with standard cab components, refer to Section *47 Standard Cab Components, page 109*. For windrowers with deluxe cab components, refer to Section *48 Deluxe Cab Components, page 111*.

44 Cab Air Conditioning and Heating

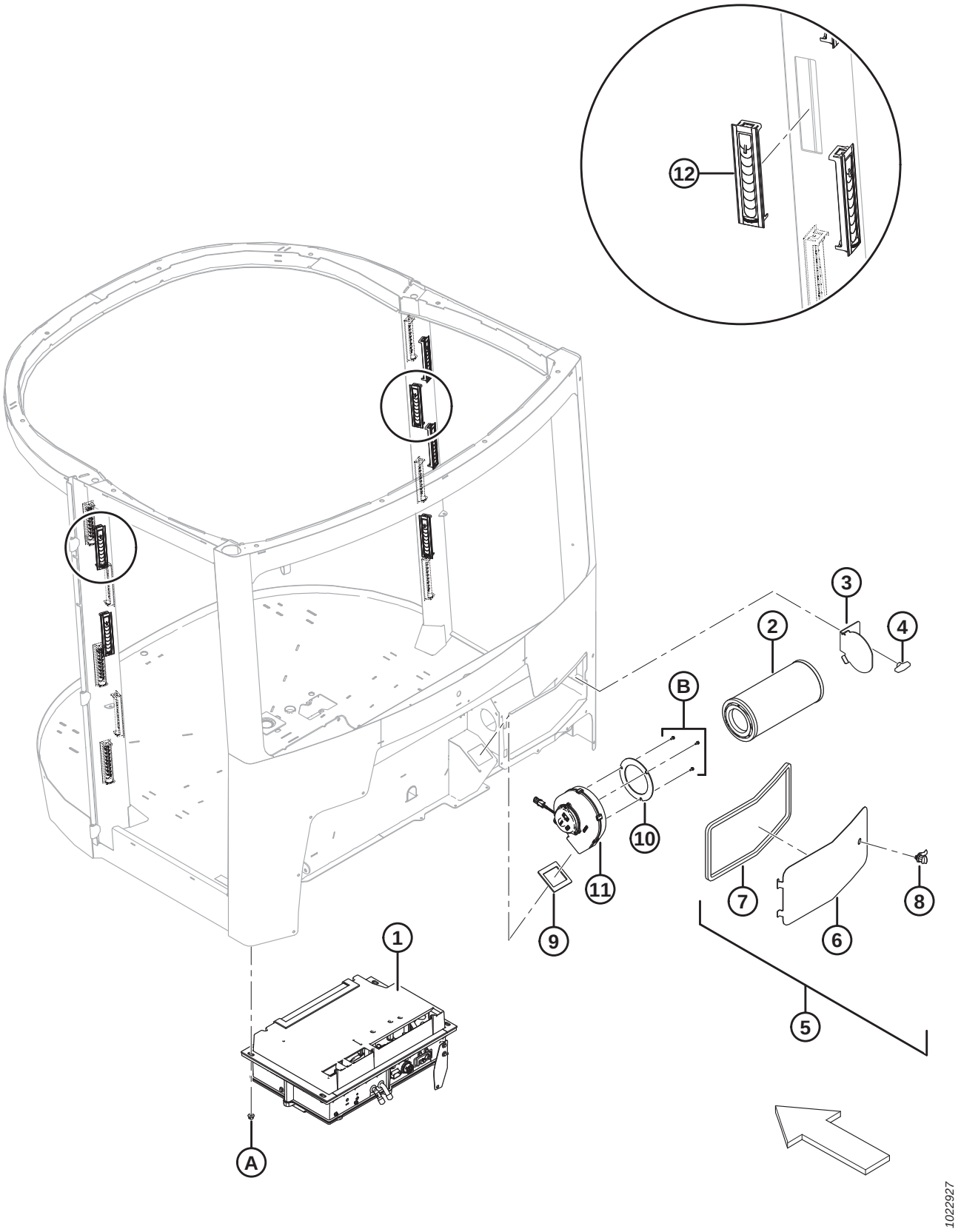

NOTE:

For TXV and drain hose routing, refer to Section *46 Heating, Ventilation, and Air Conditioning – Chassis, page 107*.

Ref	Part Number	Description	Qty	Serial Number
1	306522	ASSEMBLY – BASIC A/C AND HEATER CORE [91]	1	
2	111060	ELEMENT – PRIMARY	1	
3	291264	RETAINER – AIR FILTER	1	
4	42075	KNOB	1	
5	201589	DOOR ASSY – FRESH AIR [92]	1	
6	201590	DOOR – FRESH AIR	1	
7	201716	GASKET – FRESH AIR	1	
8	204787	LATCH – CAM	1	
9	202189	SEAL – BLOWER	1	
10	139225	INSULATOR – BLOWER	1	
11	208292	BLOWER – FRESH AIR	1	
12	201746	VENTILATOR – RECTANGULAR LOUVER	14	
A	135799	NUT – HEX FLG CTR LOC M10 X 1.5-10-A3L		
B	42292	SCREW – SELF TAPPING HEX WASH HD #10 X 1/2 ZP		

91. For service parts, refer to Section *45 Cab Air Conditioning and Heating – Service Parts, page 105*.
92. Includes door (MD #201590), gasket (MD #201716), and latch (MD #204787).

45 Cab Air Conditioning and Heating – Service Parts

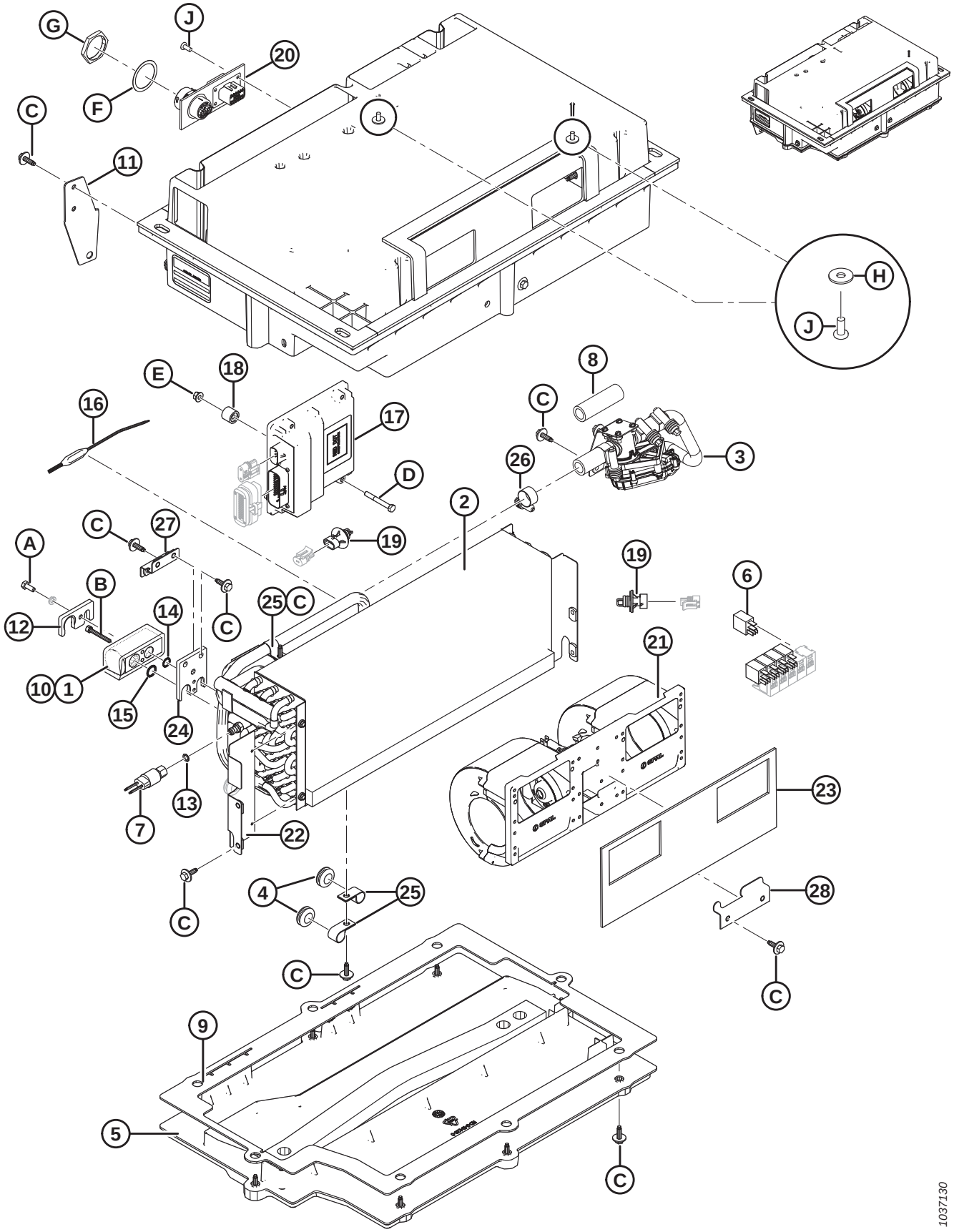

Ref	Part Number	Description	Qty	Serial Number
	306522	ASSEMBLY – BASIC A/C AND HEATER CORE [93]		
1	183386	VALVE – EXPANSION	1	
2	183387	EVAPORATOR – HEATER CORE	1	
3	306523	ASSEMBLY – WATER VALVE	1	
4	183392	GROMMET – TUBE 5/8 IN I.D., 3/16 IN WALL	2	
5	183544	COVER UNIT	1	
6	183394	RELAY – 12 V W/ RESISTOR SUPPRESSION	5	
7	183395	SWITCH – PRESSURE 34-8 PSI	1	
8	183396	HOSE – SILICON 5/8 IN I.D., 57.15 MM LG	1	
9	183397	GASKET – COVER SEAL R-9600	1	
10	183398	SEAL – TXV	1	
11	207225	BRACKET – TXV FITTINGS	1	
12	205456	PLATE – MOUNTING TXV HOSES	1	
13	183506	O-RING – HNBR, GREEN, 7.65 MM I.D., 11.1 MM O.D.	1	
14	183508	O-RING – HNBR, GREEN, 10.82 MM I.D., 14.27. MM O.D.	1	
15	183202	O-RING – HNBR, GREEN, 14 MM I.D., 17.44 MM O.D.	1	
16	208109	EVAPORATOR – PROBE ASSY	1	
17	208110	MODULE ASSY – ATC	1	
18	208111	SPACER	2	
19	208112	THERMISTOR – AIR TEMP PROBE ASSY	2	
20	208784	HARNESS – ATC	1	
21	208114	BLOWER – ATC	1	
22	208179	PLATE – CORE ATTACHMENT	1	
23	208180	GASKET – BLOWER SEAL	1	
24	208181	MOUNT – EXP VALVE BRACKET	1	
25	208182	CLAMP – 5/8 DIA	3	
26	310634	CLAMP – HOSE, CONSTANT TORQUE	2	
27	208184	BRACKET – SUPPORT TXV	1	
28	208185	BRACKET – BLOWER ATTACHMENT	1	
A	136707	BOLT – HEX HD M6 X 1 X 16-8.8-BLK		
B	136708	SCREW – HEX SOC HD M5 X 0.8 X 40-9.8-BLK		
C	136709	BOLT – HEX HD SPCL M6 X 1 X 22 X SPCL-8.8-BLK		
D	NSS	BOLT – HEX HD M6 X 1 X 50-8.8-A3L		
E	183448	NUT – HEX M6 X 1, CONICAL WASHER		
F	134729	WASHER – LOCK, HDP20, SIZE 18		
G	134727	NUT – PANEL, HDP20, SIZE 18		
H	184706	WASHER – FLAT LARGE M6-200HV-A2L		
J	252247	SCREW – PAN HD #12-14 X 1/2-RC45-ZP		

93. Refer to Section *44 Cab Air Conditioning and Heating, page 103*.

46 Heating, Ventilation, and Air Conditioning – Chassis

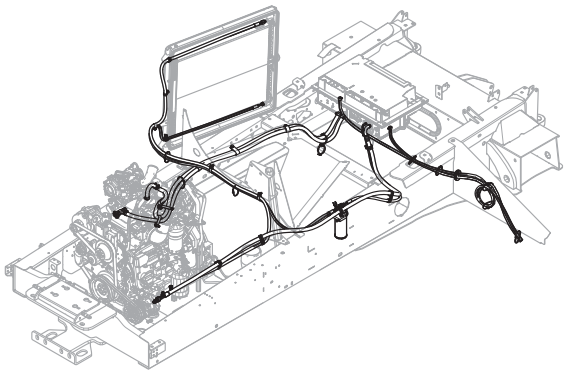

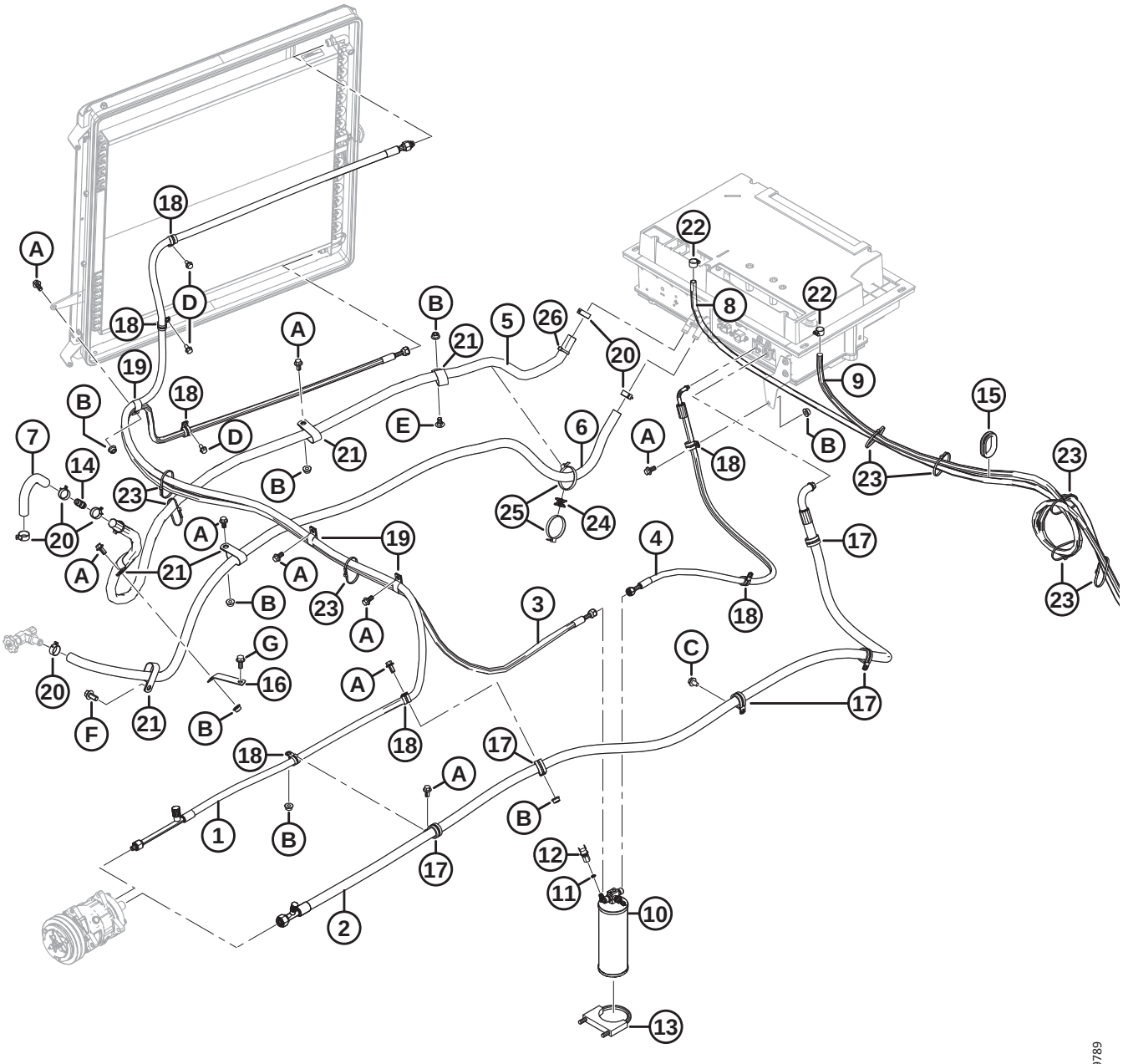

Ref	Part Number	Description	Qty	Serial Number
1	306504	HOSE – #8 A/C COMP TO COND	1	
	183443	CAP – R134A HIGH SIDE SERVICE VALVE		
	183265	VALVE – SCHRADER, HF, HIGH SIDE, HNBR GREEN		
	183508	O-RING – HNBR, #8, GREEN		
2	203017	HOSE – #10 TO #12 HOSE TXV TO COMP SUCTION	1	
	183202	O-RING – HNBR, #10, GREEN		
	183512	O-RING – HNBR, #12, GREEN		
	183264	VALVE – SCHRADER, HF, LOW SIDE, HNBR GREEN		
	183444	CAP – R134A LOW SIDE SERVICE VALVE		
3	201948	HOSE – #6 AC COND TO DRIER	1	
	183506	O-RING – HNBR, #6, GREEN		
4	203018	HOSE – #6 REC DRIER TO TXV	1	
	183506	O-RING – HNBR, #6, GREEN		
5	203597	HOSE – COOLANT, 5/8 IN. I.D., 2250 MM LG	1	
6	203596	HOSE – COOLANT, 5/8 IN. I.D., 2170 MM LG	1	
7	208075	HOSE – COOLANT, 5/8 IN. I.D., 135°	1	
8	202274	HOSE – A/C DRAIN, 12.7 MM I.D., 2300 MM LG	1	
9	202275	HOSE – A/C DRAIN, 12.7 MM I.D., 1900 MM LG	1	
10	183273	KIT – RECEIVER DRIER W/ DYE	1	
11	183506	O-RING – HNBR, #6, GREEN	1	
12	183199	SWITCH – AIR COND HIGH	1	
13	42469	CLAMP – PIPE	1	
14	134757	FITTING – CONNECTOR, 5/8 IN. I.D., BARBED	1	
15	172899	GROMMET – 44.5 MM I.D., 63.5 MM O.D.	1	
16	207457	BRACKET – CABLE SUPPORT	1	
17	209032	CLAMP – P-CLIP, INSULATED, 1 IN.	5	
18	135716	CLAMP – INSULATED 5/8 IN.	7	
19	135224	CLAMP – DOUBLE HOSE INSULATED	3	
20	112692	CLAMP – HOSE	6	
21	50022	CLAMP – INSULATED 15/16 IN.	5	
22	136541	CLAMP – LINED, SS, 11-20 MM RANGE	2	
23	21763	FASTENER – CABLE TIE, BLACK, 160 MM LG	8	
24	134442	SPACER – DUAL SWIVEL SADDLE	1	
25	30753	FASTENER – CABLE TIE, BLACK, 305 MM LG	2	
26	**40702**	**FASTENER – CABLE TIE, RED**	**2**	
A	152655	BOLT – HEX FLG HD M10 X 1.5 X 20-8.8-A3L		
B	135927	NUT – HEX SMTH FLG M10 X 1.5-8-A3L		
C	136574	SCREW – HEX WASHER HD M10 X 1.5 X 16-450HV-A3L		
D	134705	SCREW – THREAD ROLLING FLG M8 X 1.25 X 16-A3L		
E	136178	BOLT – RHSN M10 X 1.5 X 20-8.8-A3L		
F	148800	BOLT – HEX FLG HD M12 X 1.75 X 25 X SPCL-10.9-A3L		
G	**135783**	**BOLT – HEX FLG HD TFL M10 X 1.5 X 25-10.9-AA1J**		

47 Standard Cab Components

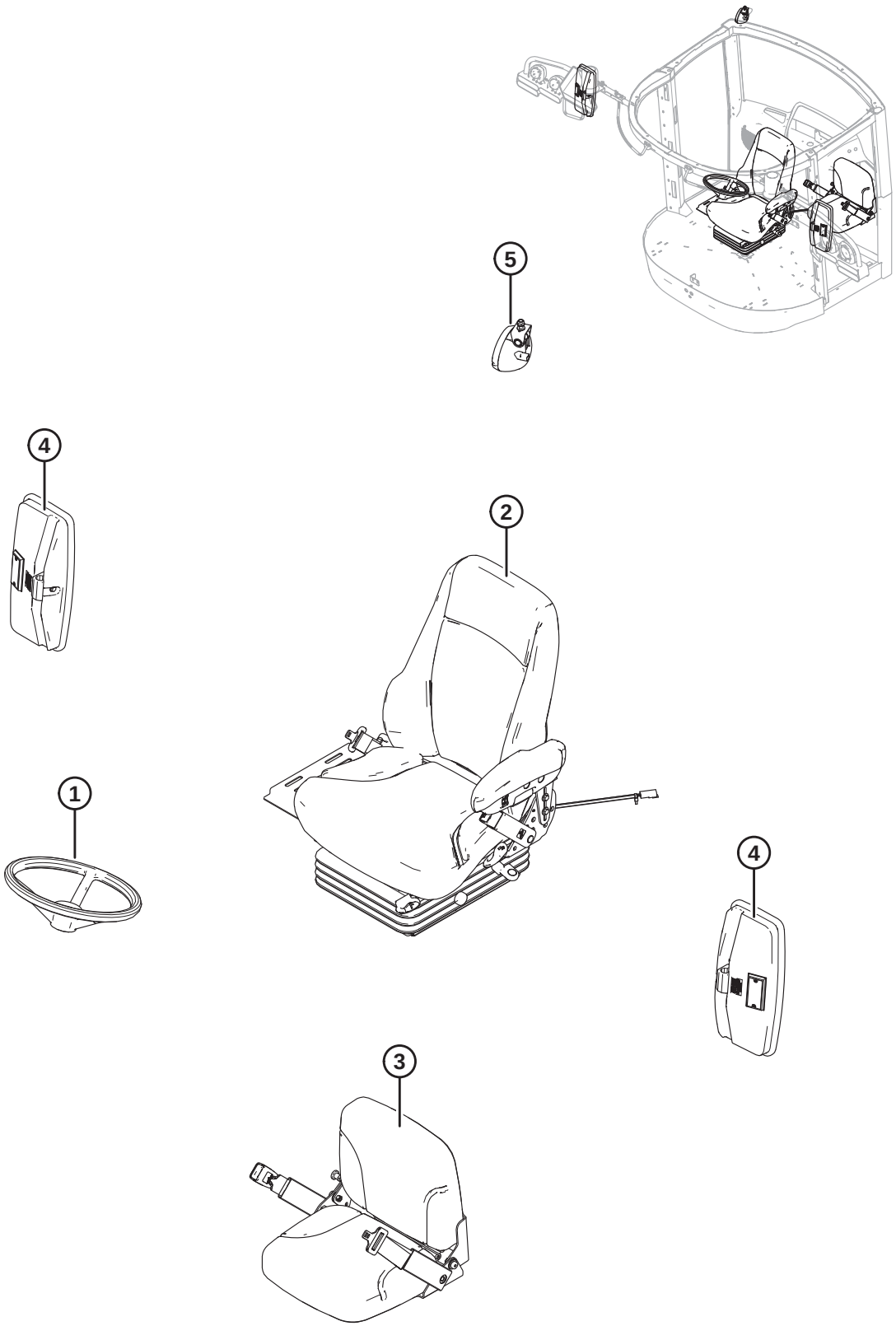

NOTE:

For roof and headliner components, refer to Sections and *34 Headliner – Radio, Speakers, and Relay Module, page 79*.

Ref	Part Number	Description	Qty	Serial Number
1	REF	WHEEL – STEERING [94]	1	
2	346256	SEAT – STANDARD [95]	1	
3	346254	SEAT TRAINING – STANDARD [96]	1	
4	205442	MIRROR – HAND OPERATED	2	
5	201488	LIGHT – FLOOD HALOGEN	1	
	208192	BULB – WORK LIGHT, H3, 12V, 55W		

94. Refer to Section *54 Steering Column and Seat Base, page 123*.
95. For service parts, refer to Section *49 Standard Operator's Seat, page 113*.
96. For service parts, refer to Section *53 Trainer's Seat, page 121*.

48 Deluxe Cab Components

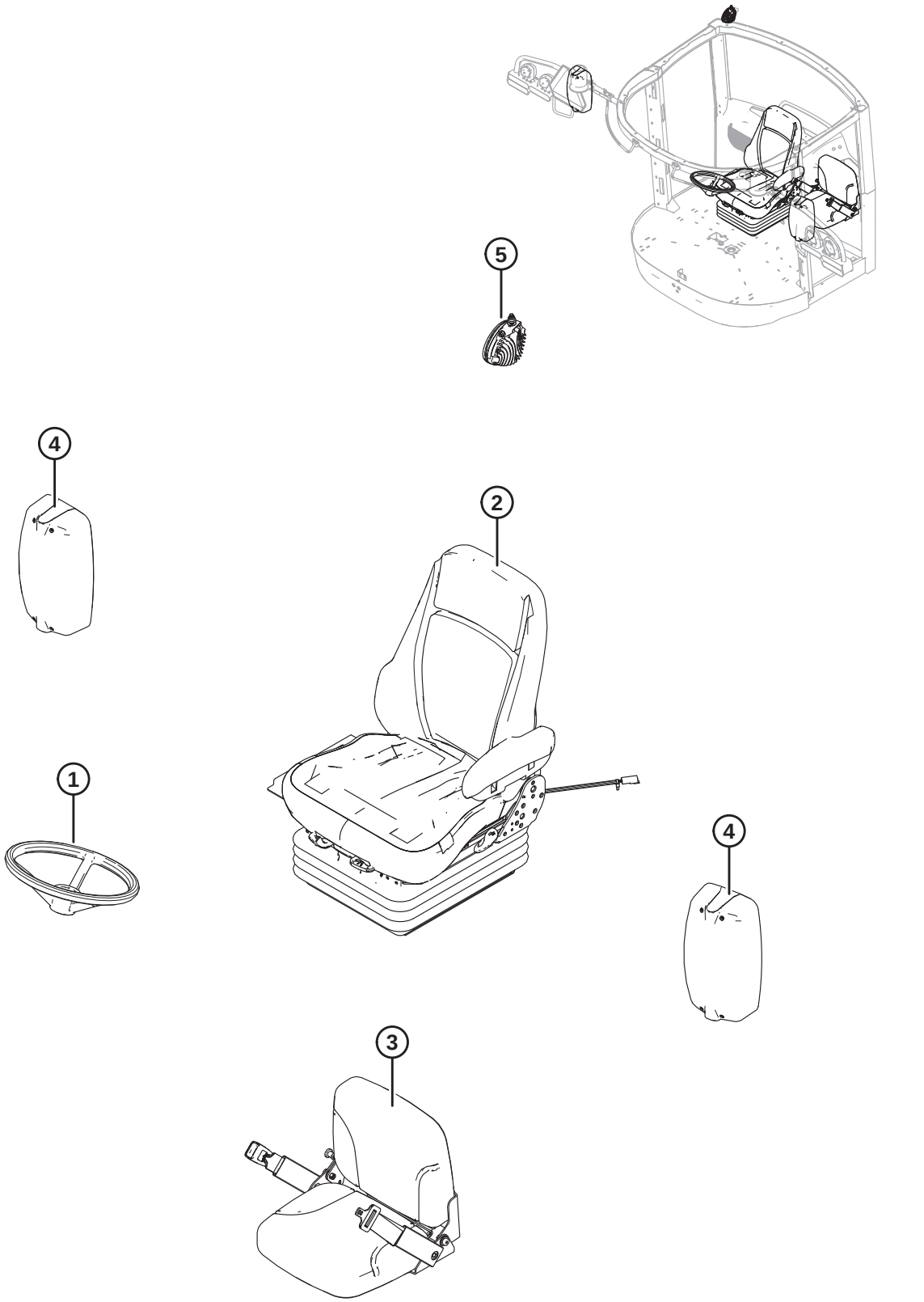

NOTE:

For roof and headliner components, refer to Sections and *34 Headliner – Radio, Speakers, and Relay Module, page 79*.

Ref	Part Number	Description	Qty	Serial Number
1	REF	WHEEL – STEERING, LEATHER [97]	1	
2	346257	SEAT – DELUXE [98]	1	
3	346255	SEAT TRAINING – DELUXE [99]	1	
4	206459	MIRROR – POWER	2	
	291464	MIRROR – GLASS W/ TAPE		
5	207062	LIGHT – FLOOD LED	1	

97. Refer to Section *54 Steering Column and Seat Base, page 123*.
98. For service parts, refer to Section *52 Deluxe Seat Suspension, page 119*.
99. For service parts, refer to Section *53 Trainer's Seat, page 121*.

49 Standard Operator’s Seat

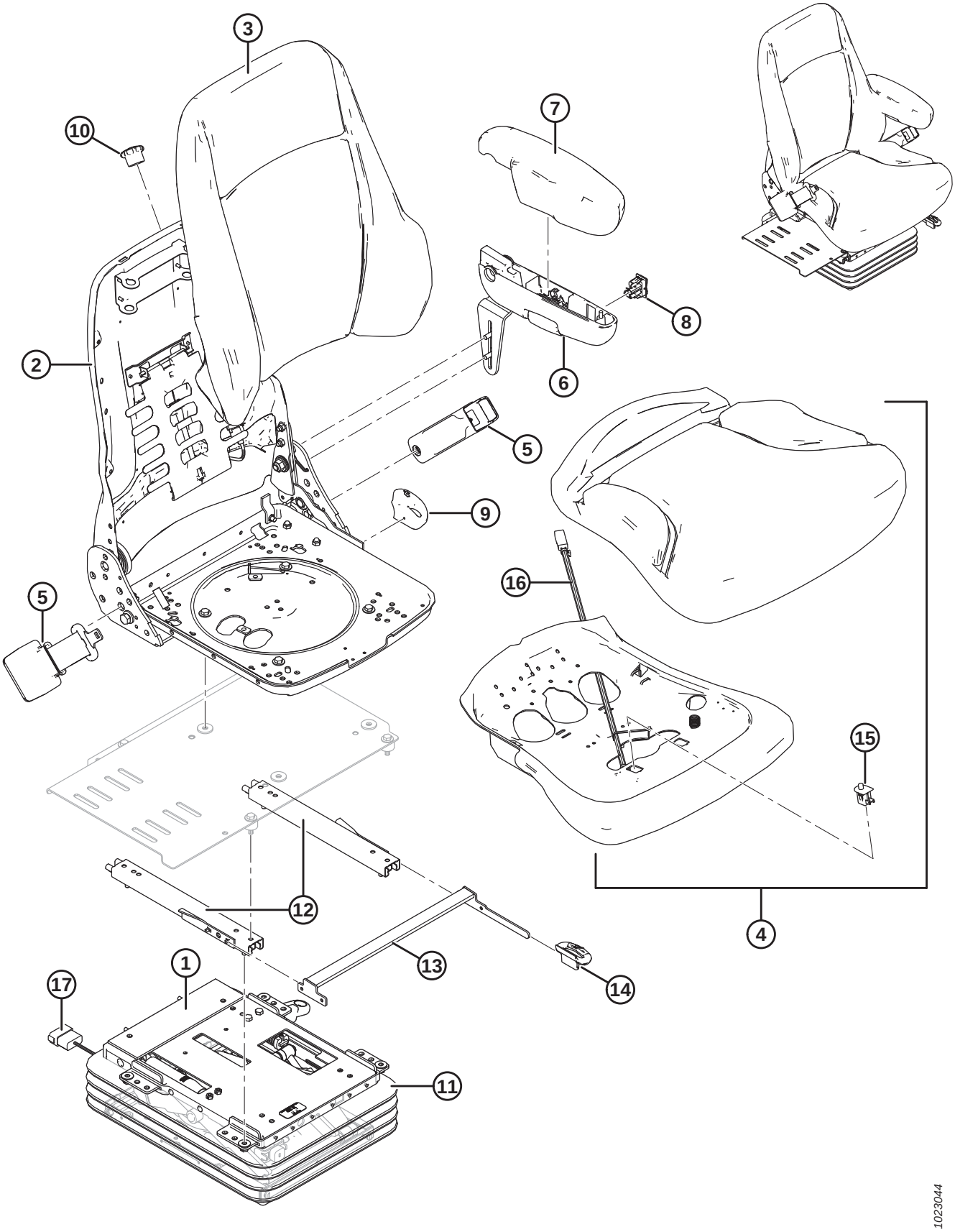

STANDARD OPERATOR'S SEAT

Ref	Part Number	Description	Qty	Serial Number
	346256	SEAT – STANDARD [100]		
1	208052	ASSY – LPA SUSPENSION COMPLETE [101]		
	109860	SPRING – AIR		
	109861	ISOLATOR – FORE-AFT		
	109859	KIT – ADJUSTABLE SHOCK ABSORBER		
	109857	KIT – BEARING		
	109856	SHAFT – BEARING		
	208038	KIT – FORE-AFT ISOLATOR SHOCK		
	109812	KIT – AIRLINE AND FITTING SERVICE		
	208040	KIT – COMPRESSOR		
2	208046	ASSY – SEAT, BARE FRAME ONLY		
3	208044	ASSY – BACK CUSHION		
4	208042	ASSY – SEAT CUSHION [102]		
	109971	HARNESS – SEAT SWITCH		
	109968	SWITCH – SEAT, OPERATOR PRESENT		
5	346060	SEAT BELT [103]		
6	208048	ASSY – LH ARMREST [104]		
7	208049	PAD – LH ARMREST		
8	109850	SWITCH – SEAT		
9	208050	KNOB – RECLINER		
10	208051	KIT – LUMBAR KNOB		
11	109855	KIT – BOOT [105]		
12	109862	KIT – FORE-AFT SLIDES		
13	208059	HANDLE – SLIDE		
14	208061	KNOB – SLIDE		
15	109968	SWITCH – SEAT, OPERATOR PRESENT		
16	109971	HARNESS – SEAT SWITCH		
17	208126	HARNESS – SEAT		

100. Refer to Section *47 Standard Cab Components, page 109*.
101. For more detailed illustration of service parts, refer to Section *50 Standard Seat Suspension, page 115*.
102. Includes operator presence seat switch (MD #109968) and seat switch harness (MD #109971).
103. Kit includes installation instructions from the manufacturer.
104. Includes left-hand armrest pad (MD #208049).
105. Includes boot, clips, and rivets.

50 Standard Seat Suspension

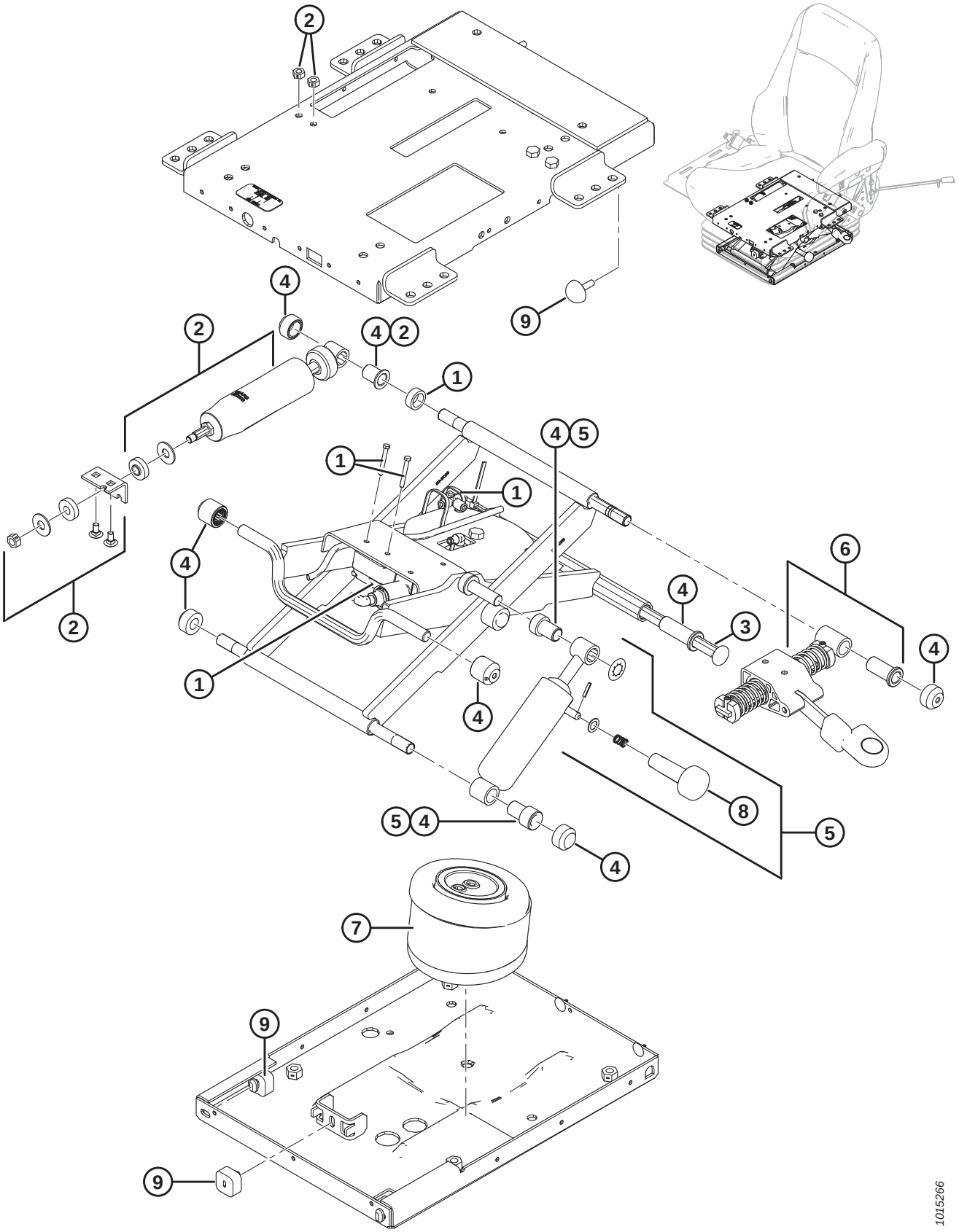

STANDARD SEAT SUSPENSION

Ref	Part Number	Description	Qty	Serial Number
	208052	ASSY – LPA SUSPENSION COMPLETE [106]		
1	208040	KIT – COMPRESSOR		
	109812	KIT – AIRLINE AND FTG SERV [107]		
2	208038	KIT – FORE-AFT ISO. SHOCK		
3	109856	SHAFT – BEARING		
4	109857	KIT – BEARING		
5	109859	KIT – ADJUSTABLE SHOCK ABSORBER [108]		
6	109861	ISOLATOR – FORE-AFT		
7	109860	SPRING – AIR		
8	109865	KNOB – ADJUSTABLE SHOCK		
9	183150	KIT – SUSPENSION BUMPER [109]		
	109858	BUMPER – SUSPENSION, SQUARE		

106. Refer to Section *49 Standard Operator's Seat, page 113*.
107. Includes nylon tube lines, convoluted line, and fittings.
108. Includes adjustable shock knob (MD #109865).
109. Includes three square suspension bumpers (MD #109858) and two spherical bumpers.

51 Deluxe Operator's Seat

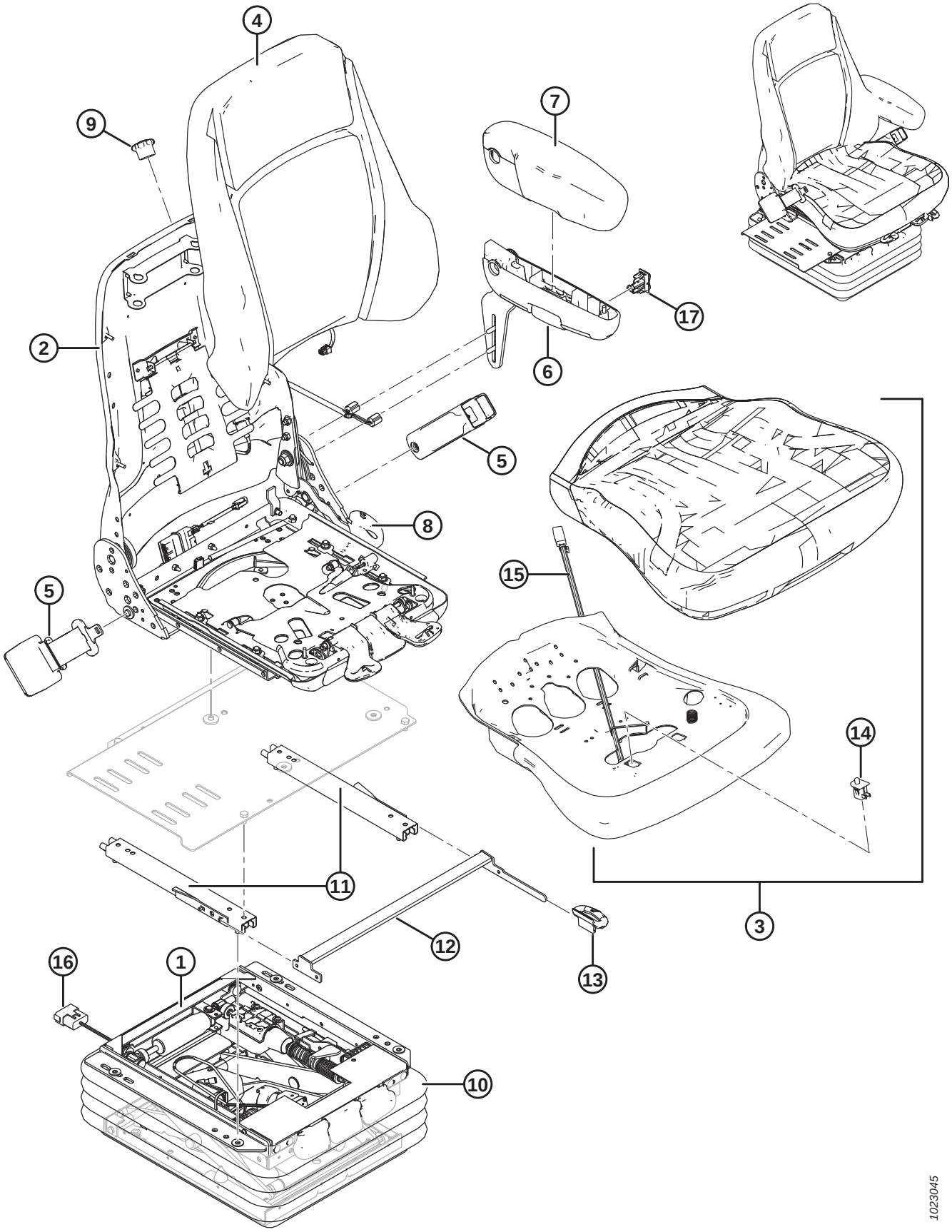

DELUXE OPERATOR'S SEAT

Ref	Part Number	Description	Qty	Serial Number
	346257	SEAT – DELUXE [110]		
1	208053	ASSY – A2K SUSPENSION COMPLETE [111]		
	109860	SPRING – AIR		
	208041	KIT – COMPRESSOR		
	208062	KIT – AIRLINE		
	208055	KIT – BEARING SHAFT		
	208064	KIT – BEARING AND ROLLER, A2K		
	208056	KIT – SUSPENSION BUMPER		
	208057	KIT – ADJUSTABLE SHOCK ABSORBER		
	208058	KIT – FORE-AFT ISOLATOR		
2	208047	ASSY – SEAT, BARE FRAME ONLY		
3	208043	ASSY – SEAT CUSHION [112]		
	109971	HARNESS – SEAT SWITCH		
	109968	SWITCH – SEAT, OPERATOR PRESENT		
4	208045	ASSY – BACK CUSHION		
5	346060	SEAT BELT [113]		
6	208063	ASSY – LH ARMREST		
7	208049	PAD – LH ARMREST		
8	208050	KNOB – RECLINER		
9	208051	KIT – LUMBAR KNOB		
10	208054	KIT – BOOT [114]		
11	109862	KIT – FORE-AFT SLIDES		
12	208060	HANDLE – SLIDE		
13	208061	KNOB – SLIDE		
14	109968	SWITCH – SEAT, OPERATOR PRESENT		
15	109971	HARNESS – SEAT SWITCH		
16	208126	HARNESS – SEAT		
17	109850	SWITCH – SEAT		

110. Refer to Section *48 Deluxe Cab Components, page 111*.
111. For more detailed illustration of service parts, refer to Section *52 Deluxe Seat Suspension, page 119*.
112. Includes operator presence seat switch (MD #109968) and seat switch harness (MD #109971).
113. Kit includes installation instructions from the manufacturer.
114. Includes boot, clips, and rivets.

52 Deluxe Seat Suspension

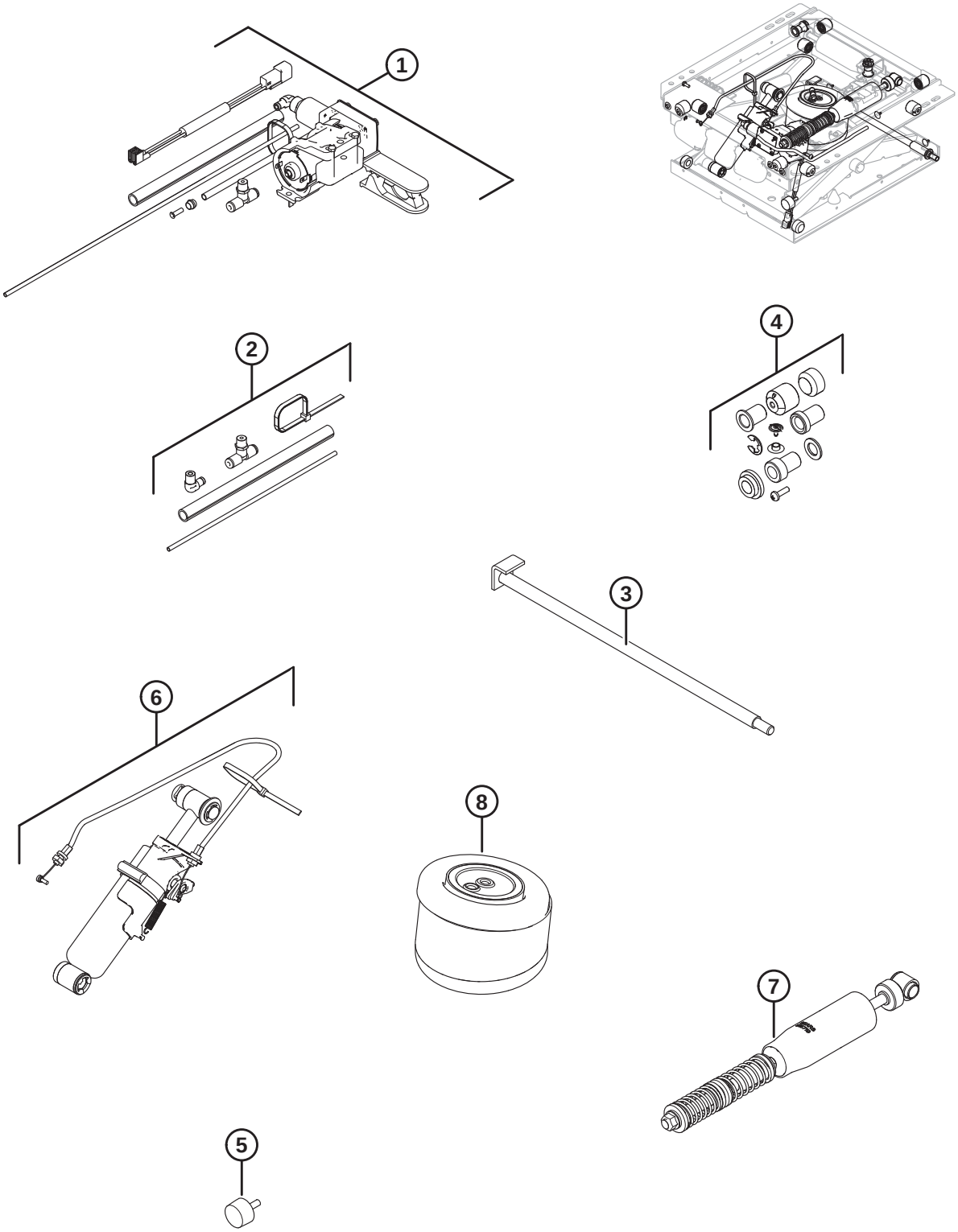

DELUXE SEAT SUSPENSION

Ref	Part Number	Description	Qty	Serial Number
	208053	ASSY – A2K SUSPENSION COMPLETE [115]		
1	208041	KIT – COMPRESSOR		
2	208062	KIT – AIRLINE		
3	208055	KIT – BEARING SHAFT		
4	208064	KIT – BEARING AND ROLLER, A2K		
5	208056	SUSPENSION BUMPER		
6	208057	KIT – ADJ SHOCK ABSORBER		
7	208058	KIT – FORE-AFT ISOLATOR		
8	109860	SPRING – AIR		

115. Refer to Section *51 Deluxe Operator's Seat, page 117*.

53 Trainer’s Seat

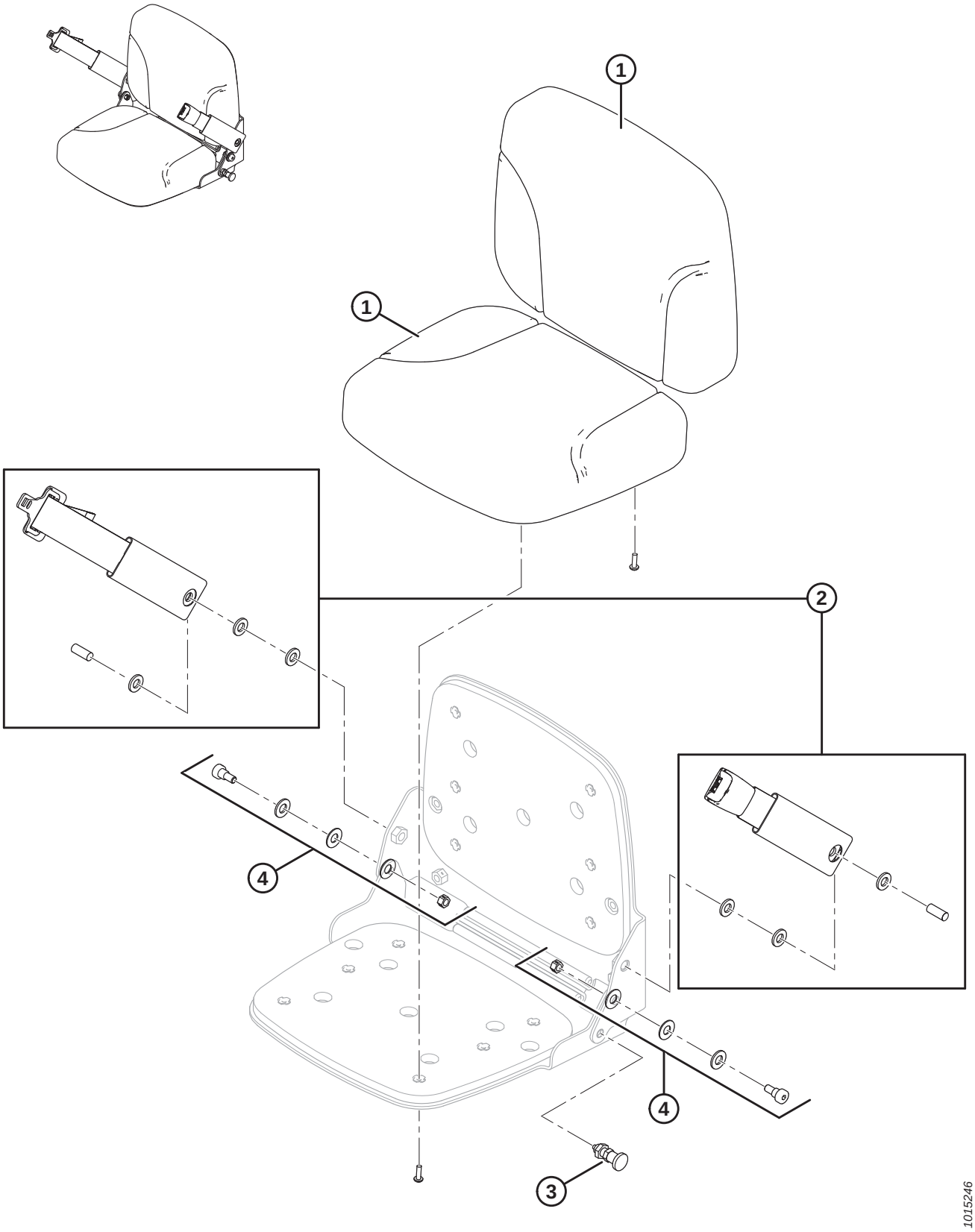

TRAINER'S SEAT

NOTE:

For trainer's seat placement, refer to Section *37 Cab Interior and Upholstery, page 87*.

Ref	Part Number	Description	Qty	Serial Number
	346254	SEAT TRAINING – STANDARD [116]		
	346255	SEAT TRAINING – DELUXE [117]		
1	208097	KIT – CUSHION, STANDARD [118]	2	
	208098	KIT – CUSHION, DELUXE [118]	2	
2	346061	KIT – SEAT BELT [119]	1	
3	208100	LATCH – SEAT	1	
4	208102	KIT – PIVOT	2	

116. Refer to Section *47 Standard Cab Components, page 109*.
117. Refer to Section *48 Deluxe Cab Components, page 111*.
118. For windrowers with standard cab components, order cushion kit (MD #208097). For windrowers with deluxe cab components, order cushion kit (MD #208098). Cushion kits include four pan head screws.
119. Kit includes installation instructions from the manufacturer.

54 Steering Column and Seat Base

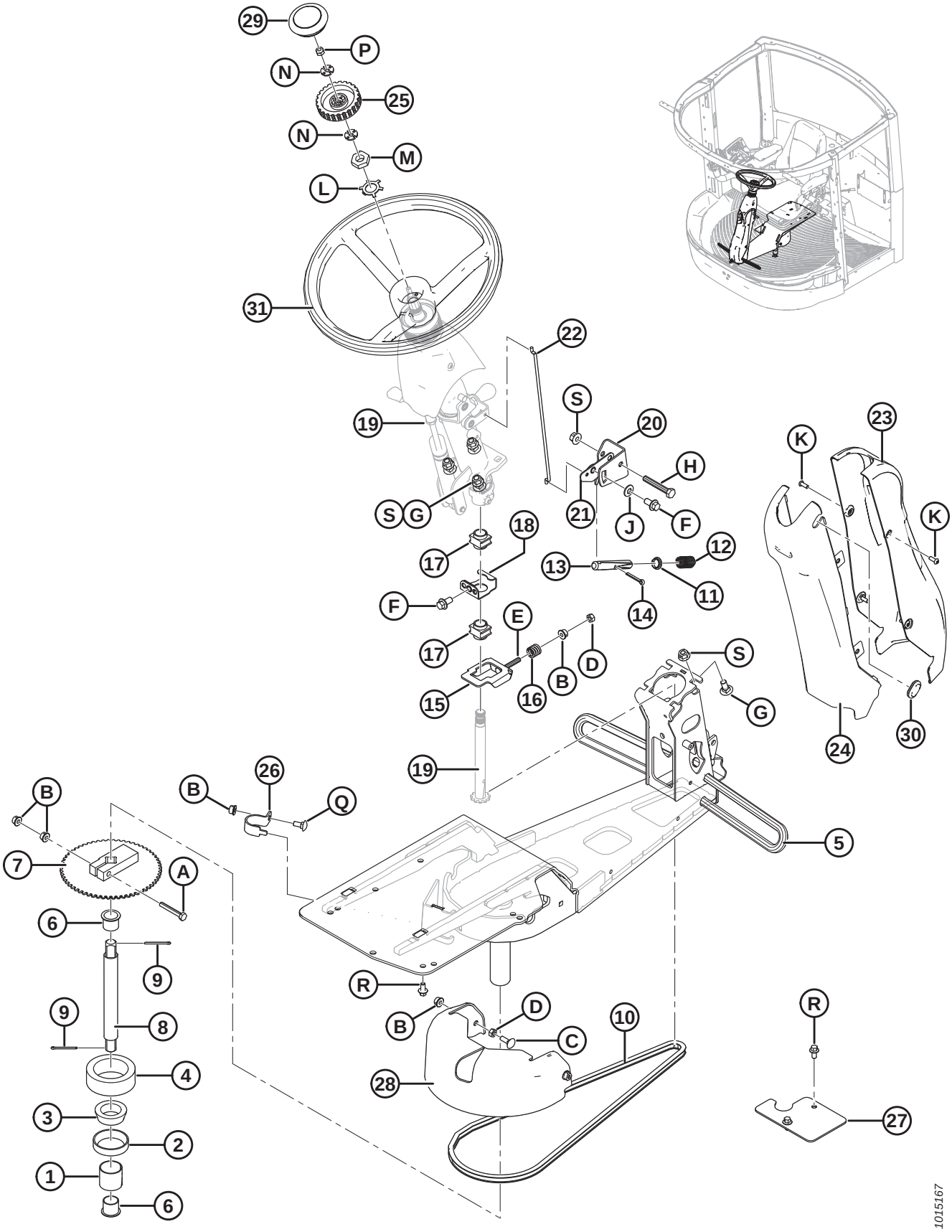

STEERING COLUMN AND SEAT BASE

Ref	Part Number	Description	Qty	Serial Number
1	109350	BUSHING – SLEEVE, 1.5 IN.	1	
2	30516	BEARING – CUP	1	
3	109611	BEARING – CONE	1	
4	203543	SEAL – DUST, SEAT PIVOT	1	
5	202505	BASE WELDT – OPERATORS STATION	1	
6	206966	BUSHING – PLASTIC, FLANGED, 1.0 IN. BORE	2	
7	202785	SPROCKET WELDT	1	
8	202515	SHAFT – STEERING	1	
9	18606	PIN – COTTER 1/8 DIA X 1.5 ZP	2	
10	109479	CHAIN – STEERING	1	
11	109478	BUSHING – SNAP-IN, 0.625 IN.	1	
12	19739	SPRING – COMPRESSION	1	
13	209521	PIN – LATCH	1	
14	18648	PIN – COTTER 3/16 DIA X 1.25 ZP	1	
15	202781	GUIDE – LOWER BUSHING, WELDT	1	
16	109779	SPRING – COMPRESSION	1	
17	109751	BUSHING – PLASTIC	2	
18	202783	RETAINER – BUSHING WELDT	1	
19	REF	ASSY – STEERING COLUMN C/W TOP COVER [120]		
20	160275	ARM – RELEASE	1	
21	202779	ARM – SEAT BASE RELEASE, WELDT	1	
22	202569	ROD – RELEASE	1	
23	206042	BOTTOM COVER – FRONT	1	
24	208806	BOTTOM COVER – REAR, CUTOUT	1	
25	203020	KNOB STEERING COLUMN RELEASE	1	
26	203401	CLIP – HARNESS	1	
27	206454	PLATE – GROMMET	1	
28	207539	COVER – SEAT BASE	1	
29	203029	COVER – STEERING WHEEL	1	
30	208770	GROMMET – RUBBER	1	
31	202492	WHEEL – STEERING (STANDARD CAB ONLY) [121]	1	
	204748	WHEEL – STEERING, LEATHER (DELUXE CAB ONLY) [121]	1	
A	184655	BOLT – HEX HD M8 X 1.25 X 55-8.8-A2L		
B	135337	NUT – HEX FLG CTR LOC M8 X 1.25-8-A2L		
C	184648	BOLT – RHSN M8 X 1.25 X 25-8.8-A3L		
D	184687	NUT – HEX M8 X 1.25-8-A2L		
E	252270	BOLT – HEX HD TFL M8 X 1.25 X 50-8.8-BO		
F	152655	BOLT – HEX FLG HD M10 X 1.5 X 20-8.8-A3L		
G	135785	BOLT – RHSN M10 X 1.5 X 25-8.8-A3L		
H	108172	BOLT – HEX HD M10 X 1.5 X 65-8.8-A3L		
J	184584	WASHER – CON SPRING M10A STL SAE 1050-1075		

120. For service parts, refer to Section *55 Steering Column – Service Parts, page 127*.
121. For windrowers with standard cab components, order steering wheel (MD #202492). For windrowers with deluxe cab components, order steering wheel (MD #204748).

STEERING COLUMN AND SEAT BASE

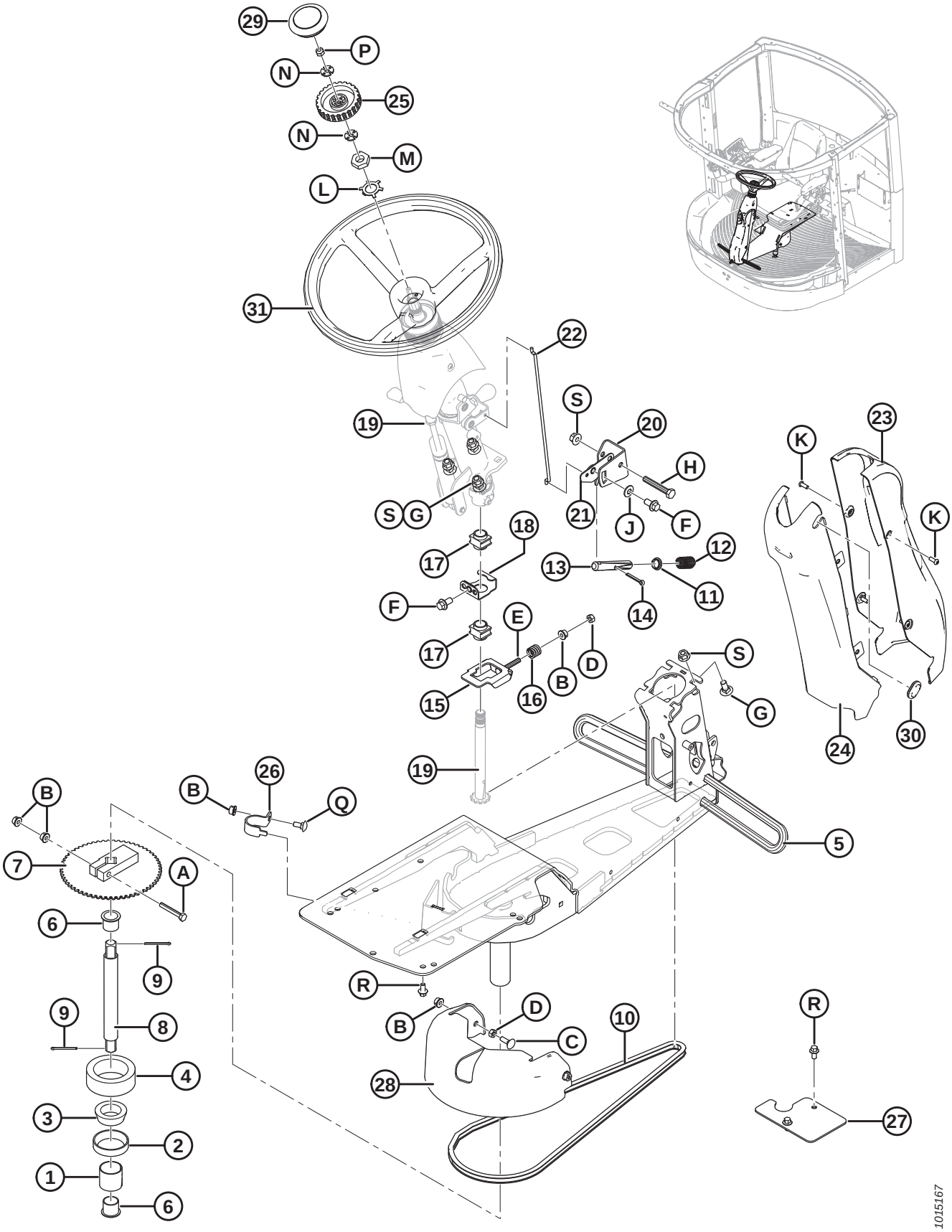

STEERING COLUMN AND SEAT BASE

Ref	Part Number	Description	Qty	Serial Number
K	136886	SCREW – HEX SOC M6 X 1 X 16-10.9-ZB		
L	203022	WASHER – SPECIAL LOCK		
M	152519	NUT – HEX THIN M20 X 1.5-8-A3L		
N	203019	WASHER		
P	184688	NUT – HEX NYLOC M8 X 1.25-8-A2L		
Q	197171	BOLT – RHSN M8 X 1.25 X 20-8.8-A2L		
R	136485	BOLT – HEX FLG HD TFL M8 X 1.25 X 16-8.8-A3L		
S	135799	NUT – HEX FLG CTR LOC M10 X 1.5-10-A3L		

55 Steering Column – Service Parts

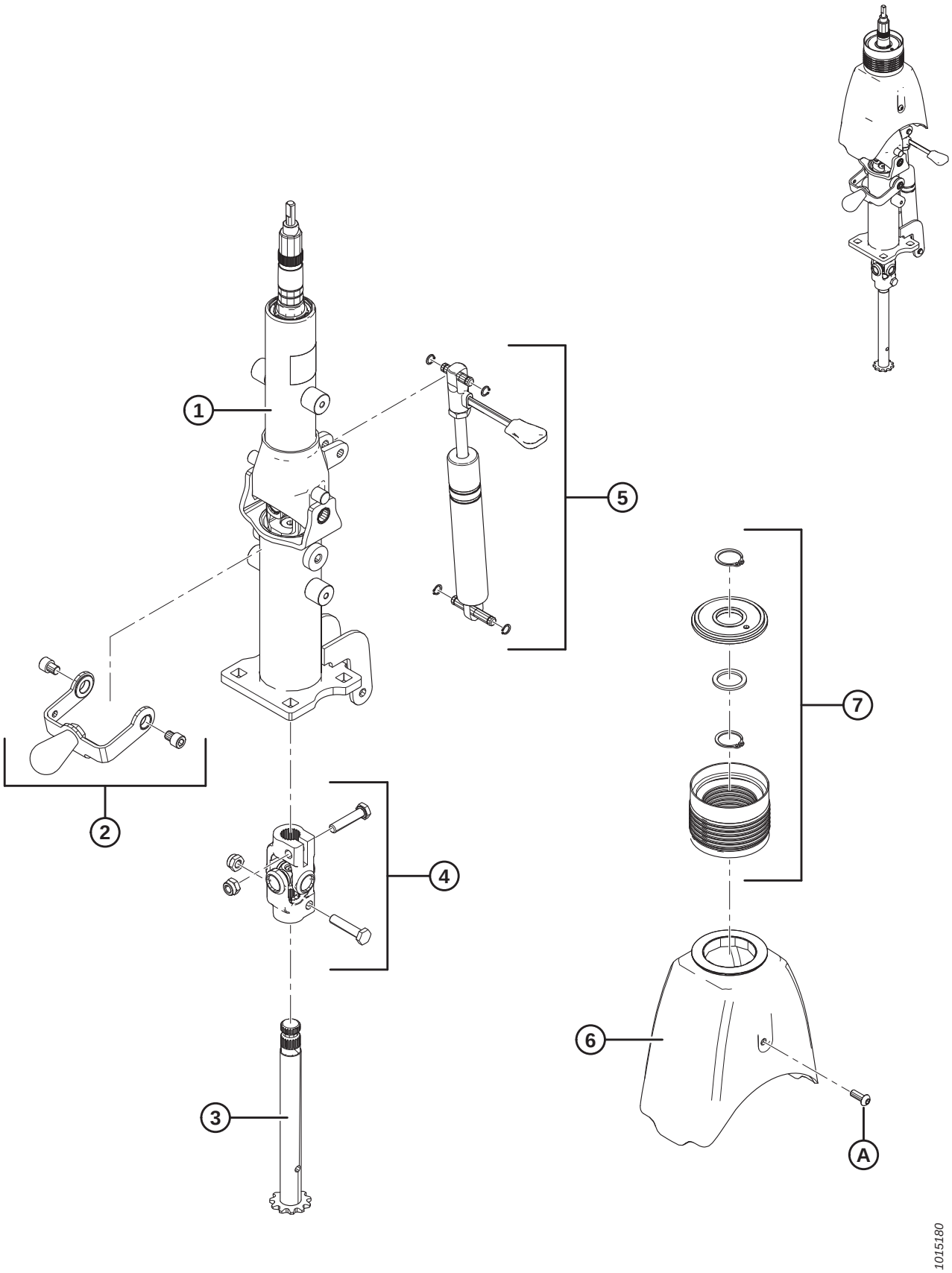

STEERING COLUMN – SERVICE PARTS

NOTE:

For steering column assembly (complete with top cover) placement, refer to Section *54 Steering Column and Seat Base, page 123*.

Ref	Part Number	Description	Qty	Serial Number
1	208010	KIT – COMPLETE TELESCOPIC ASSY		
2	208013	KIT – UNLOCK SYSTEM ASSY		
3	208014	KIT – LOWER WELDED SHAFT		
4	208015	KIT – ARTICULATED JOINT		
5	208016	KIT – GAS STRUT		
6	206040	TOP COVER		
7	207145	KIT – RUBBER BOOT		
A	136886	SCREW – HEX SOC M6 X 1 X 16-10.9-ZB		

56 Ground Speed Lever, Cable, and Display

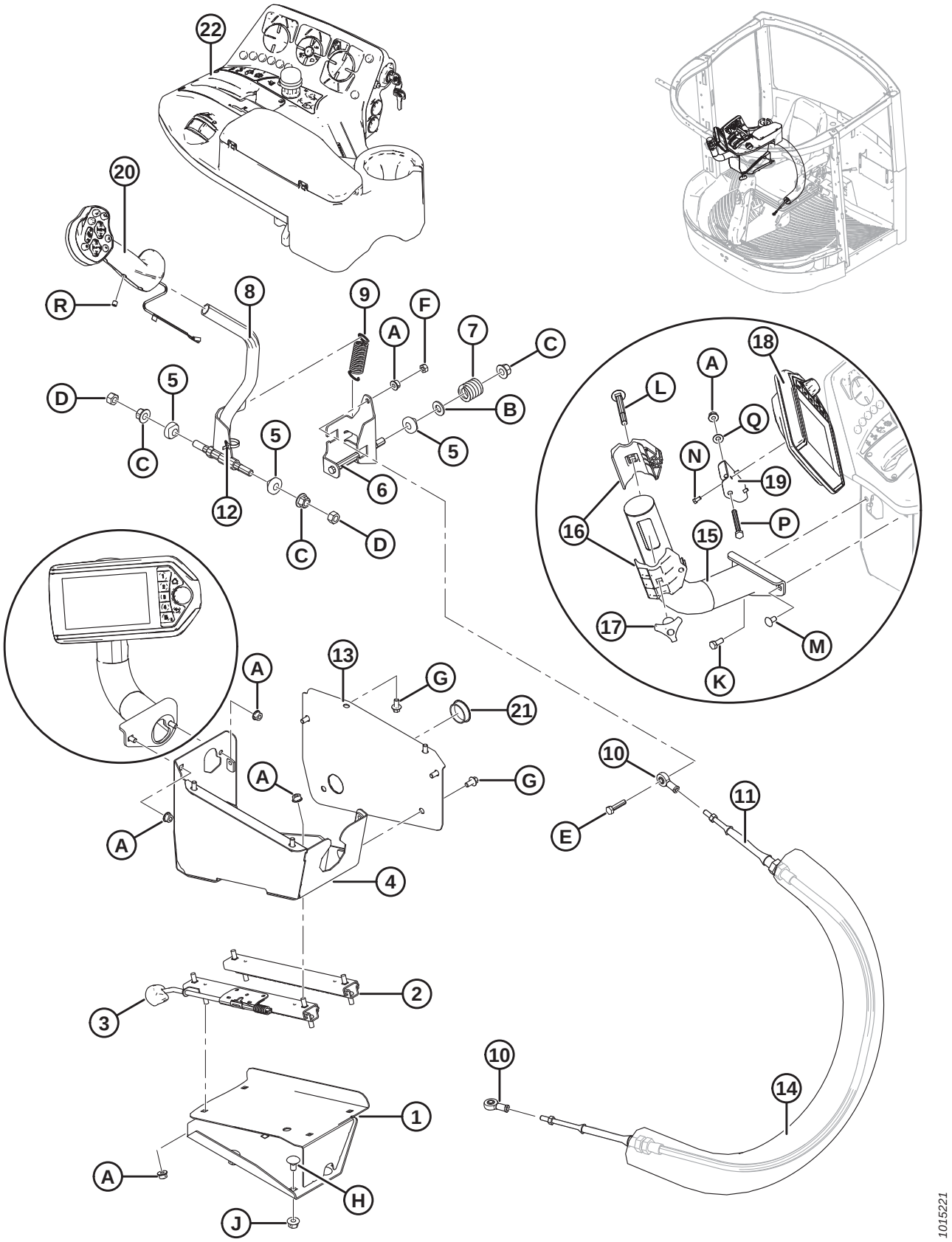

GROUND SPEED LEVER, CABLE, AND DISPLAY

Ref	Part Number	Description	Qty	Serial Number
1	209697	SUPPORT – CONSOLE, LOWER WELDT	1	
2	202654	RAIL – SLIDE, NON LOCKING	1	
3	202456	RAIL – SLIDE, LOCKING	1	
4	346230	SUPPORT – CONSOLE, UPPER WELDT	1	
5	109750	BUSHING – PLASTIC	3	
6	346232	CHANNEL – SPEED LEVER, WELDT	1	
7	28700	SPRING – COMPRESSION	1	
8	203518	LEVER – SPEED WELDT	1	
9	25321	SPRING – EXTENSION	1	
10	109312	JOINT – BALL, 5/16 IN. FEMALE	2	
11	207914	CABLE – PUSH PULL	1	
12	21763	FASTENER – CABLE TIE, BLACK, 160 MM LG	1	
13	201299	PANEL – REAR, CONSOLE	1	
14	204174	COVER – HARNESS/CABLE	1	
15	204010	SUPPORT – DISPLAY, WELDT	1	
16	207580	CLAMP HALF – DISPLAY MOUNT	2	
17	204187	KNOB	1	
18	306360	KIT – CAB DISPLAY, BROWN	1	396190–
	306001	MODULE – CAB DISPLAY, BLACK [122]	1	–396189
19	204007	SUPPORT – DISPLAY	1	
20	209209	HANDLE – GSL	1	
21	161378	PLUG – HOLE (Ø1.5 IN.)	1	
22	208783	CONSOLE – ARMREST ASSEMBLY [123]	1	
A	135337	NUT – HEX FLG CTR LOC M8 X 1.25-8-A2L		
B	18599	WASHER – SAE FLAT 17/32 I.D. X 1-1/16 IN. O.D. ZP		
C	136431	NUT – HEX FLG CTR LOC M12 X 1.75-10-A3L		
D	184694	NUT – HEX M12 X 1.75-8-A3L		
E	184654	BOLT – HEX HD M8 X 1.25 X 35-8.8-A2L		
F	184687	NUT – HEX M8 X 1.25-8-A2L		
G	136485	BOLT – HEX FLG HD TFL M8 X 1.25 X 16-8.8-A3L		
H	136178	BOLT – RHSN M10 X 1.5 X 20-8.8-A3L		
J	135799	NUT – HEX FLG CTR LOC M10 X 1.5-10-A3L		
K	252200	BOLT – HEX HD TFL M8 X 1.25 X 20-8.8-PLN		
L	152157	BOLT – RHSN M10 X 1.5 X 80-8.8-A3L		
M	191489	BOLT – RHSSN TFL M8 X 1.25 X 16-8.8-A2L		
N	136263	BOLT – HEX HD TFL M5 X 0.8 X 10-8.8-A2L		
P	184656	BOLT – HEX HD M8 X 1.25 X 70-8.8-A2L		
Q	184579	WASHER – CON SPRING M8A STL SAE 1050-1075		
R	136869	SCREW – SET CUP POINT M8 X 1.25 X 8-SS-PL		

122. Service part only for machines made in model year 2020 and prior.
123. For service parts, refer to Section *57 Console Components, page 131*.

57 Console Components

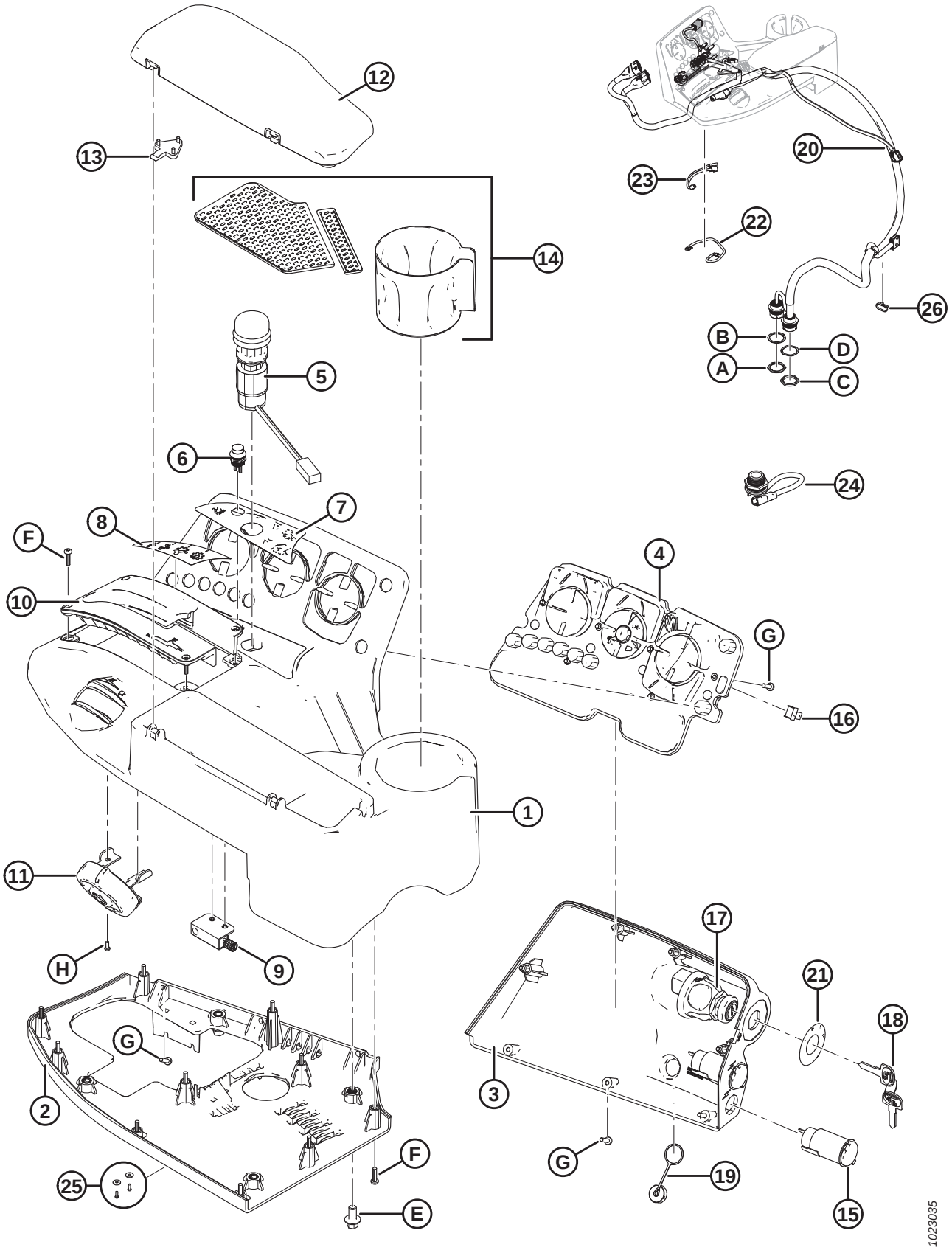

CONSOLE COMPONENTS

Ref	Part Number	Description	Qty	Serial Number
	208783	CONSOLE – ARMREST ASSEMBLY [124]		
1	206771	CONSOLE HOUSING – UPPER [125]	1	
2	206772	CONSOLE HOUSING – LOWER [126]	1	
3	206775	SWITCH PANEL COVER [127]	1	
4	208808	MODULE – SWITCH PAD AND CIRCUIT BOARD [128]	1	
5	109505	SWITCH – HEADER ENGAGE	1	
6	206774	SWITCH – HEADER REVERSE	1	
7	REF	DECAL – HEADER SWITCH [129]		
8	REF	DECAL – FUNCTION SWITCHES [129]		
9	200974	SWITCH – MAGNETIC PROXIMITY, GSL	1	
10	206773	GSL GUIDE [130]	1	
11	206779	THROTTLE CONTROL [131]	1	
12	206783	PAD – ARMREST C/W HINGES	1	
13	206784	KIT – ARMREST HINGES [132]	2	
14	206780	MAT – TRAY (SET) [133]	1	
15	206785	TERMINAL – POWER OUTLET	1	
16	206776	CAP – USB PORT	1	
17	134716	SWITCH – IGNITION, 4 POSITION WITH KEY [134]	1	
18	134717	KEY – IGNITION SWITCH, CODE 701	1	
19	206777	CAP – USB ACCESS PORT, REAR	1	
20	209570	HARNESS – CONSOLE	1	
	500470	CONNECTOR – DEUT, DT, 3/M, J1939 (CAN TERMINATOR)		
21	REF	DECAL – KEY SWITCH [129]		
22	208810	HARNESS – GSL HANDLE EXTENSION	1	
23	208811	HARNESS – CONSOLE	1	
24	209571	CABLE – MINI USB TO JST [135]	1	
25	208989	KIT – NEUTRAL SWITCH FASTENERS [136]	1	
26	21763	FASTENER – CABLE TIE, BLACK, 160 MM LG	1	
A	134010	NUT – PANEL, HD30, SIZE 24		
B	134011	WASHER – LOCK SPRING, DEUTSCH HD, SIZE 24		
C	134728	NUT – PANEL, HDP20, SIZE 24		

124. Refer to Section *56 Ground Speed Lever, Cable, and Display, page 129*.
125. Includes header switch decal, function switches decal, screws (MD #252706, 252707, 252708), and neutral switch fasteners kit (MD #208989).
126. Includes ten screws (MD #252706) and three screws (MD #252707).
127. Includes key switch decal and seven screws (MD #252707).
128. Includes six screws (MD #252707).
129. Refer to Section *106 Decals – Information and Reflectors, page 243*.
130. Includes four screws (MD #252706).
131. Includes four screws (MD #252708).
132. Includes two hinges (not sold separately) and six screws (not sold separately).
133. Includes all parts shown.
134. Includes two keys (MD #134717).
135. Cable used to program CAN network.
136. Kit includes two screws and two washers. Used to attach GSL magnetic proximity switch (MD #200974) to console.

CONSOLE COMPONENTS

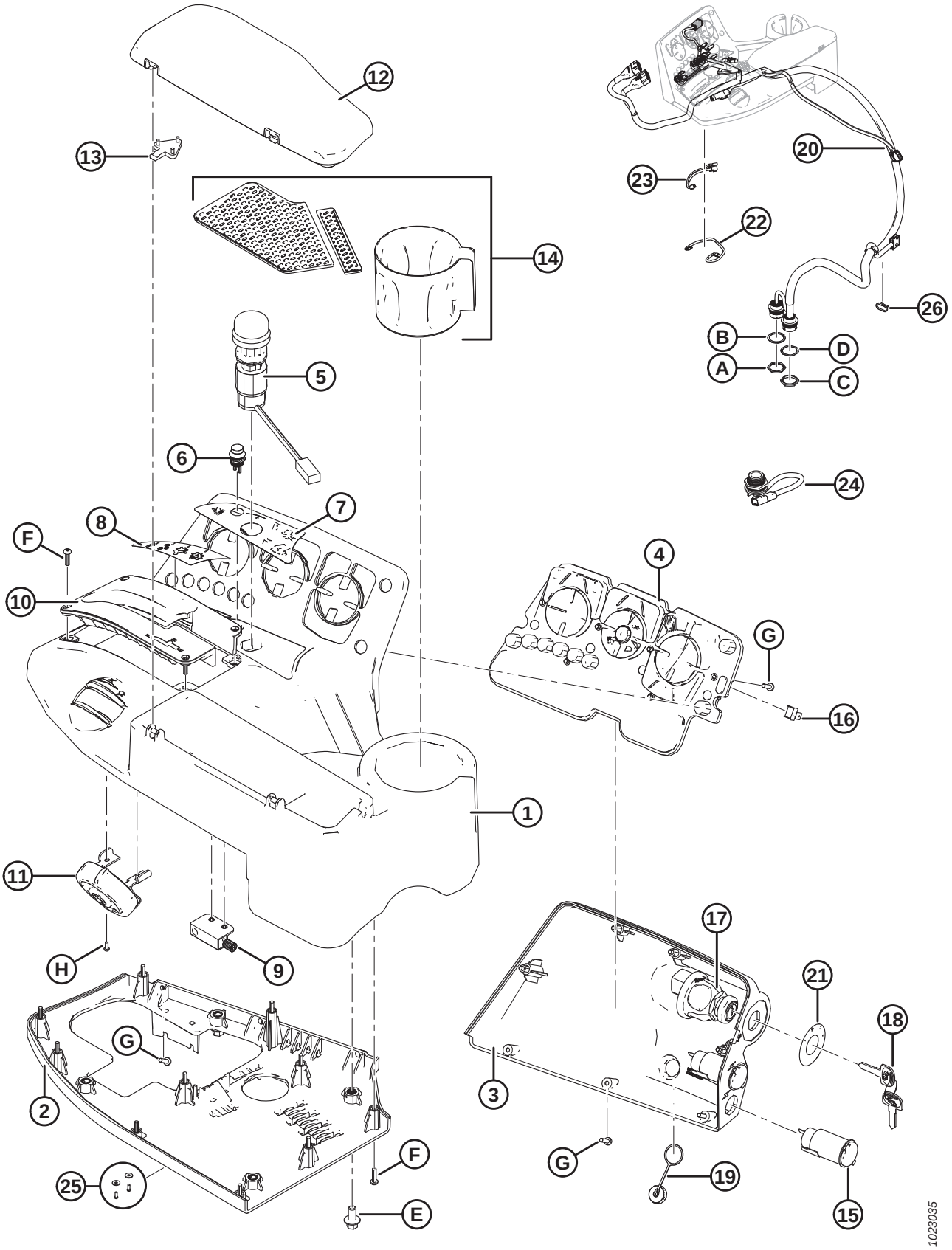

CONSOLE COMPONENTS

Ref	Part Number	Description	Qty	Serial Number
D	134730	WASHER – LOCK, HDP20, SIZE 24		
E	136485	BOLT – HEX FLG HD TFL M8 X 1.25 X 16-8.8-A3L		
F	252706	SCREW – TORX SOC PAN HD M4 X 0.7 X 16-8.8-AA2L		
G	252707	SCREW – TORX SOC PAN HD M4 X 0.7 X 14 X SPCL-8.8-AA1T		
H	252708	SCREW – TORX SOC PAN HD M4 X 0.7 X 8-8.8-AA2L		

58 Steering and Ground Speed Control (under Cab)

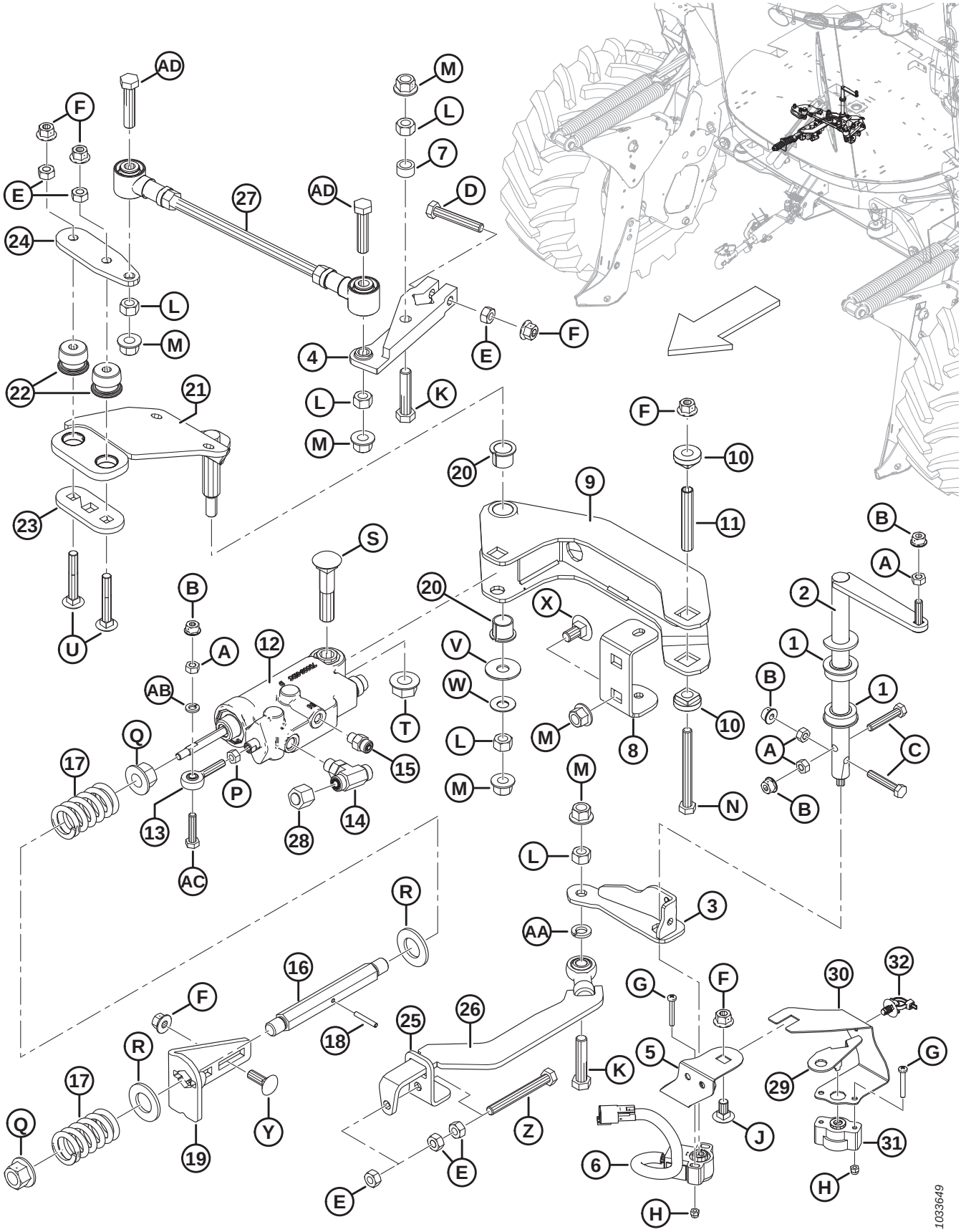

STEERING AND GROUND SPEED CONTROL (UNDER CAB)

Ref	Part Number	Description	Qty	Serial Number
1	109818	BEARING	2	
2	201701	SHAFT – SPEED WELDT	1	
3	203505	ARM – SPEED, WELDT	1	
4	203508	ARM – STEERING	1	
5	201705	SUPPORT – SENSOR	1	
6	201224	SENSOR – ROTARY POSITION [137]	1	
7	14294	SPACER	1	
8	209924	SUPPORT – PIVOT	1	
9	204354	CARRIER – SERVO WELDT	1	
10	109750	BUSHING – PLASTIC	2	
11	203277	SPACER – TUBE	1	
12	183913	VALVE – SERVO CONTROL	1	
	111990	SEAL KIT		
13	109313	JOINT – BALL, 5/16 IN. MALE	1	
14	136566	FITTING – BRANCH TEE HYD	1	
	50219	O-RING – #6 ORB		
	135865	O-RING – #6 ORFS		
15	135775	FITTING – ADAPTER	1	
	50223	O-RING – #4 ORB		
	135957	O-RING – #4 ORFS		
16	203509	SHAFT – SERVO	1	
17	109807	SPRING – COMPRESSION	2	
18	13617	PIN – SPRING 3/16 DIA X 1.25 LG	1	
19	183166	SUPPORT – SERVO	1	
20	135570	BUSHING – TEFLON	2	
21	207233	PIVOT – PINTLE WELDT	1	
22	30591	INSULATOR – RUBBER	2	
23	201149	BAR – BUSHING	1	
24	207250	BAR – BUSHING	1	
25	203504	ANGLE – SERVO INPUT	1	
26	203501	LINK – VALVE CONTROL, WELDT	1	
27	306271	KIT – M-SERIES STEERING ROD [138]	1	–371189
	306267	ROD – STEERING LINK [139]	1	371190–
28	136325	CAP – HYD SAE -6 ORFS	1	
29	208637	ADAPTER – STEERING SENSOR	1	
30	208895	SUPPORT – SENSOR, STEERING	1	
31	208894	SENSOR – ROTARY POSITION	1	
32	136655	FASTENER – FIR TREE MT W/ TIE	1	

137. Used to determine ground speed lever position.
138. Kit intended to replace and update a failed steering link rod and hardware for model year 2019 and prior. New booted ball joints of steering link rod aid in maintaining consistent performance over the life of the windrower and reduce impact of dirt and moisture on the joint. Kit includes steering link rod (MD #291651), hardware (MD #184675, 184694, 136431), and installation instruction.
139. Replaces steering link rod if either; steering rod kit (MD #306271) was installed or your windrower is from model year 2020 and later.

STEERING AND GROUND SPEED CONTROL (UNDER CAB)

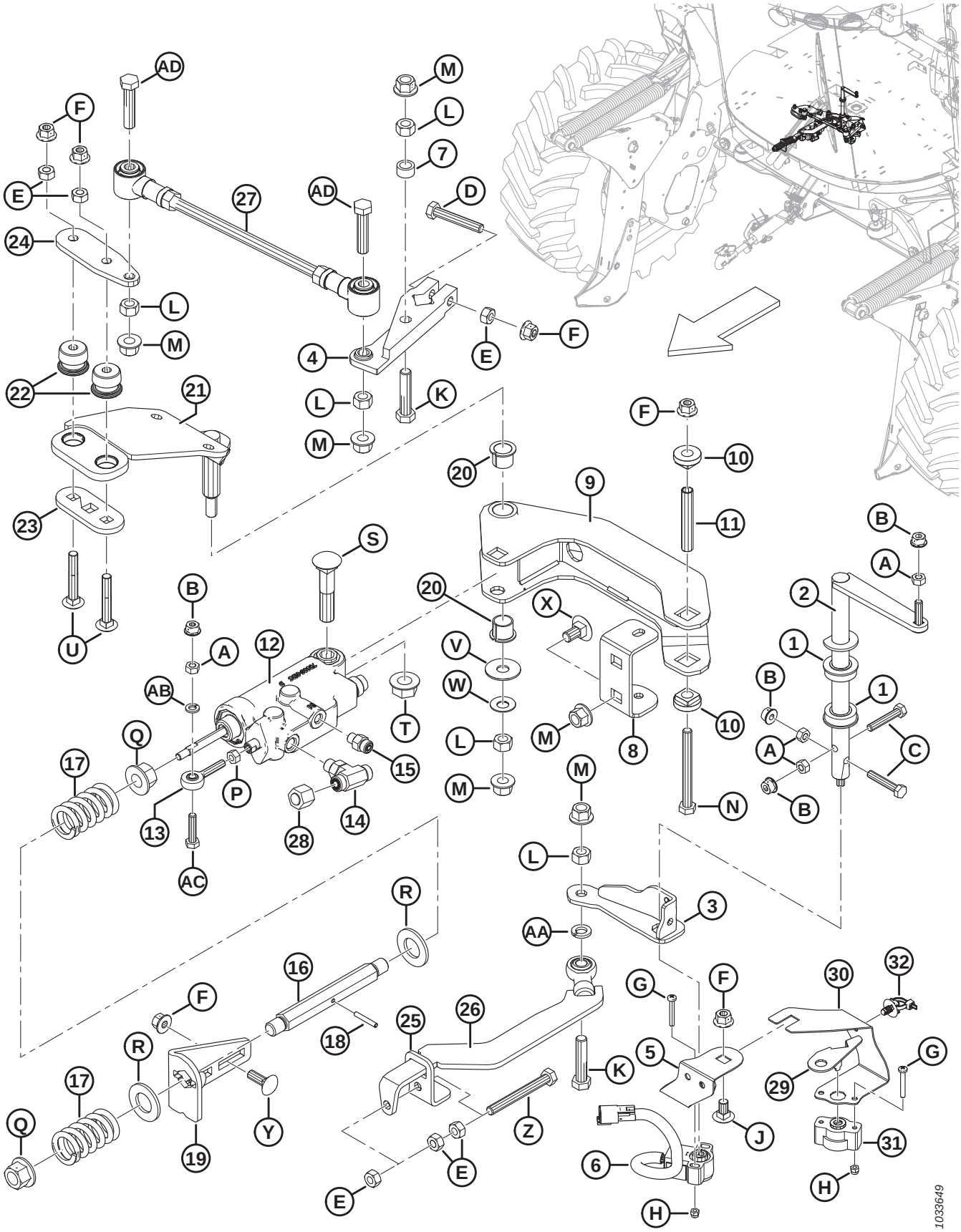

STEERING AND GROUND SPEED CONTROL (UNDER CAB)

Ref	Part Number	Description	Qty	Serial Number
A	184687	NUT – HEX M8 X 1.25-8-A2L		
B	135337	NUT – HEX FLG CTR LOC M8 X 1.25-8-A2L		
C	30660	BOLT – HEX HD M8 X 1.25 X 45-8.8-A2L		
D	184664	BOLT – HEX HD M10 X 1.5 X 60-8.8-A3L		
E	30505	NUT – HEX M10 X 1.5-10-A3L		
F	135799	NUT – HEX FLG CTR LOC M10 X 1.5-10-A3L		
G	136177	SCREW – PAN HD ISO 7045 M5 X 0.8 X 35-4.8-A2L		
H	197230	NUT – HEX NYLOC M5 X 0.8-8-A2L		
J	136178	BOLT – RHSN M10 X 1.5 X 20-8.8-A3L		
K	152779	BOLT – HEX HD M12 X 1.75 X 55-8.8-A3L		
L	184694	NUT – HEX M12 X 1.75-8-A3L		
M	136431	NUT – HEX FLG CTR LOC M12 X 1.75-10-A3L		
N	30659	BOLT – HEX HD M10 X 1.5 X 100-8.8-A3L		
P	20214	NUT – HEX 5/16-24 UNF GR 5 ZP		
Q	136440	NUT – HEX FLG CTR LOC M16 X 2-10-A3L		
R	18602	WASHER – SAE FLAT 15/16 I.D. X 1.75 IN. O.D. ZP		
S	21762	BOLT – RHSSN 5/8 NC X 3.0 LG GR 5 ZP		
T	50225	NUT – FLANGE DT SMOOTH FACE .625-11 UNC		
U	136183	BOLT – RHSN M10 X 1.5 X 65-8.8-A3L		
V	32247	WASHER – FLAT		
W	184595	WASHER – CONICAL SPRING 1/2 IN.		
X	135903	BOLT – RHSN M12 X 1.75 X 25-8.8-A3L		
Y	184662	BOLT – RHSN TFL M10 X 1.5 X 30-8.8-A3L		
Z	136454	BOLT – HEX HD TFL M10 X 1.5 X 90-8.8-A3L		
AA	30633	WASHER – LOC SPRING M12-CS-1055-1065-A2L		
AB	30716	WASHER – LOC SPRING M8-CS-1055-1065-A2L		
AC	184654	BOLT – HEX HD M8 X 1.25 X 35-8.8-A2L		
AD	184675	BOLT – HEX HD M12 X 1.75 X 70-8.8-AA1J		

59 Neutral Interlock and Pintle Arms

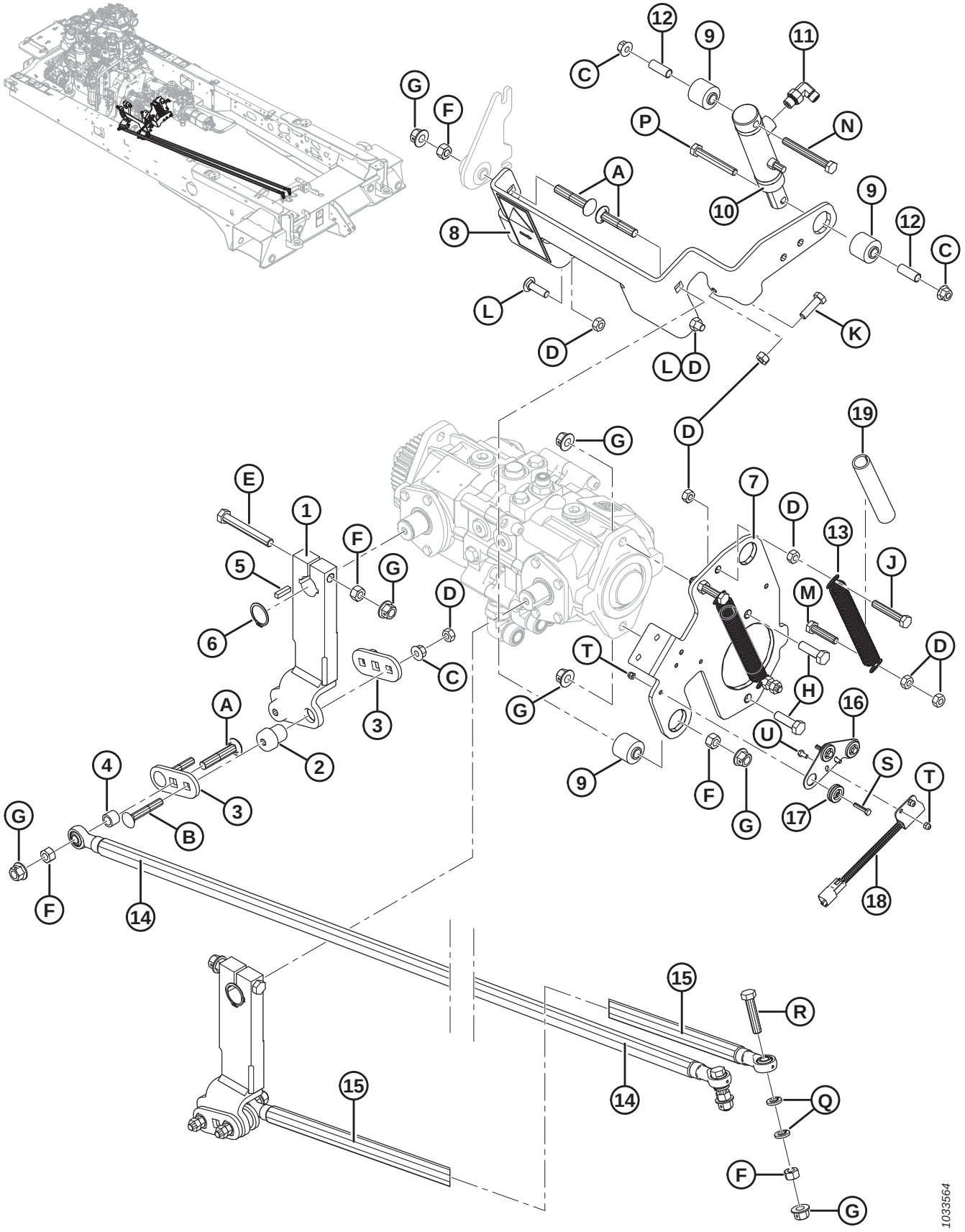

NEUTRAL INTERLOCK AND PINTLE ARMS

Ref	Part Number	Description	Qty	Serial Number
1	306077	ARM – PINTLE WELDT	2	
2	42039	INSULATOR – RUBBER	4	
3	201149	BAR – BUSHING	4	
4	132531	SPACER	2	
5	18810	KEY	2	
6	153289	RING – RETAINING EXTERNAL	2	
7	202014	ASSEMBLY – INTERLOCK SUPPORT [140]	1	
8	202015	ASSEMBLY – PIVOT ISOLATOR [141]	1	
9	50040	BUSHING – RUBBER	3	
10	111599	CYLINDER – HYDRAULIC	1	
	166171	SEAL KIT		
11	136239	FITTING – ELBOW 90° HYD	1	
	50219	O-RING – #6 ORB		
	135957	O-RING – #4 ORFS		
12	202022	SLEEVE – TUBE	2	
13	110977	SPRING – EXT	2	
14	201647	ROD – STEERING WELDT, 2219 MM LG	1	
15	201648	ROD – STEERING WELDT, 1980 MM LG	1	
16	207830	PLATE – SWITCH MOUNT	1	
17	207829	GROMMET – ISOLATOR	3	
18	200974	SWITCH – NEUTRAL	1	
19	209385	DAMPENER – SPRING	2	
A	136112	BOLT – RHSSN M12 X 1.75 X 65-8.8-A3L		
B	136183	BOLT – RHSN M10 X 1.5 X 65-8.8-A3L		
C	135799	NUT – HEX FLG CTR LOC M10 X 1.5-10-A3L		
D	30505	NUT – HEX M10 X 1.5-10-A3L		
E	184673	BOLT – HEX HD M12 X 1.75 X 90-10.9-A3L		
F	135156	NUT – HEX M12 X 1.75-10-A3L		
G	136431	NUT – HEX FLG CTR LOC M12 X 1.75-10-A3L		
H	184669	BOLT – HEX HD M12 X 1.75 X 40-8.8-A3L		
J	184664	BOLT – HEX HD M10 X 1.5 X 60-8.8-A3L		
K	30628	BOLT – HEX HD M10 X 1.5 X 35-8.8-A3L		
L	184658	BOLT – RHSSN M10 X 1.5 X 50-8.8-AA1J		
M	135335	BOLT – HEX HD M10 X 1.5 X 45-8.8-A3L		
N	30682	BOLT – HEX HD M10 X 1.5 X 90-8.8-A3L		
P	184659	BOLT – HEX HD M10 X 1.5 X 75-8.8-A3L		
Q	30633	WASHER – LOC SPRING M12-CS-1055-1065-A2L		
R	152779	BOLT – HEX HD M12 X 1.75 X 55-8.8-A3L		
S	252365	BOLT – HEX HD M5 X 0.8 X 25-8.8-A2L		
T	197230	NUT – HEX NYLOC M5 X 0.8-8-A2L		
U	136263	BOLT – HEX HD M5 X 0.8 X 10-8.8-A2L		

140. Includes two rubber bushings (MD #50040).
141. Includes rubber bushing (MD #50040) and decal (MD #166425).

60 Engine Gearbox

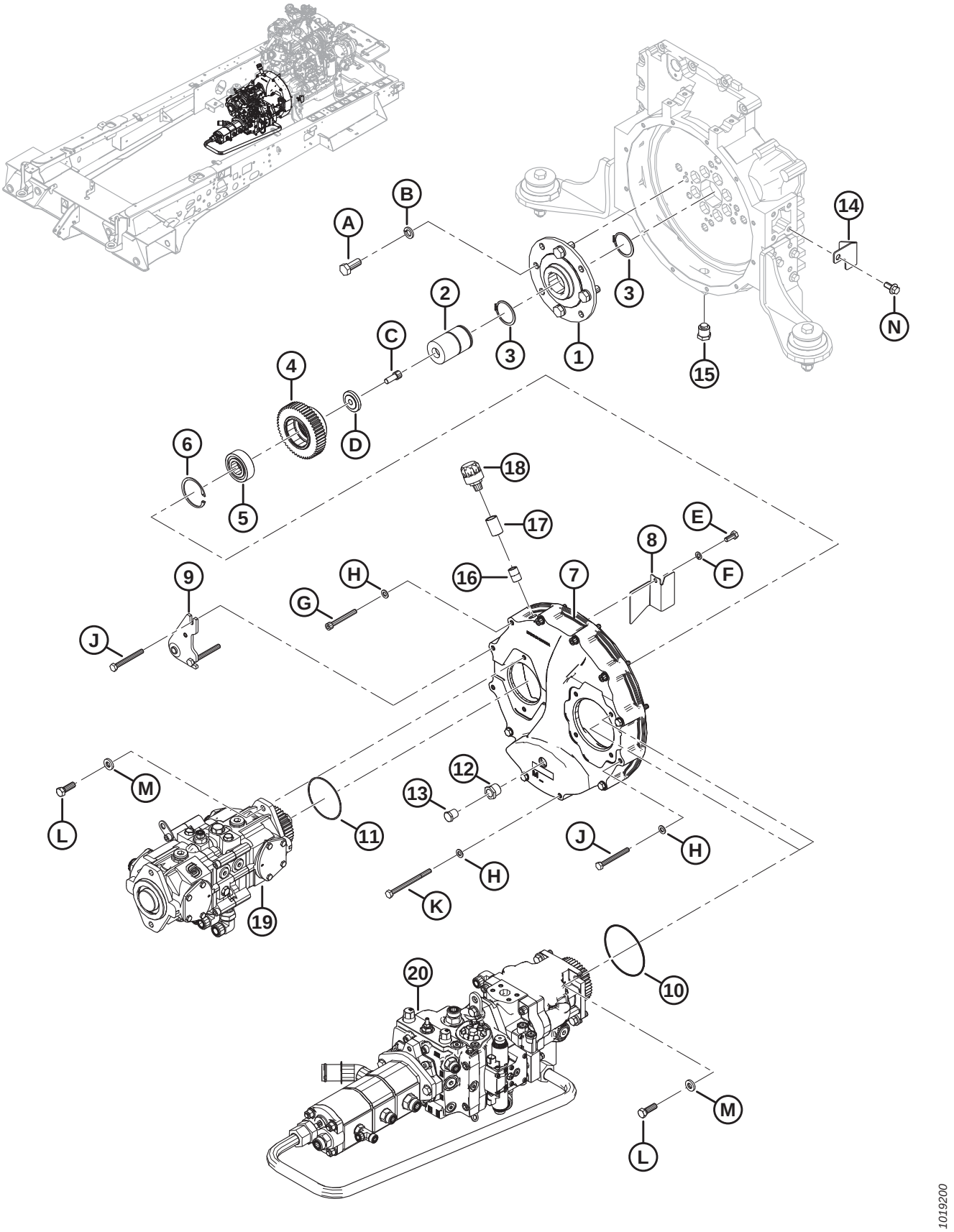

ENGINE GEARBOX

Ref	Part Number	Description	Qty	Serial Number
1	111511	COUPLING – BELL HOUSING	1	
2	111677	COUPLING – SPLINE	1	
3	111521	RING – RETAINING	2	
4	306113	GEAR – CENTER (4 CYL-51T)	1	
5	111665	BEARING – ROLLER [142]	1	
6	38854	RING – INT RETAINING	1	
7	208216	COVER – MACHINED, 4 CYL HD	1	
8	167910	DEFLECTOR – OIL	1	
9	207894	ANCHOR – INTERLOCK, C/W BUSHING	1	
	50040	BUSHING – RUBBER		
10	111546	O RING – 4.88 IN I.D. X Ø0.118	1	
11	30045	O RING – 101.27 MM I.D. X 2.62 MM	1	
12	5745	FITTING – REDUCER BUSHING	1	
13	136558	PLUG – HEX HEAD PIPE	1	
14	209598	BRACKET – PLUG	1	
15	111772	PLUG – MAGNETIC (3/4 NPT)	1	
16	5744	FITTING – CLOSE NIPPLE 1/2 NPT	1	
17	30346	FITTING – COUPLING 1/2 NPT	1	
18	209374	PLUG – BREATHER, RIVETED	1	
19	REF	ASSEMBLY – TRACTION PUMP [143]		
20	REF	ASSEMBLY – PUMP [144]		
A	111528	BOLT – HEX HD TFL M16 X 2 X 40-8.8-A3L		
B	18639	WASHER – REG. LOCK 5/8 IN. NOM. ID ZP		
C	50154	SCREW – HEX SOC HD TFL M12 X 1.75 X 30-8.8-A3L		
D	206609	WASHER – MACHINED		
E	30627	BOLT – HEX HD TFL M10 X 1.5 X 25-8.8-A3L		
F	30632	WASHER – LOCK SPRING M10-200HV-A3L		
G	136108	SCREW – HEX SOC HD M10 X 1.5 X 80-12.9-BO		
H	184711	WASHER – FLAT REG M10-200HV-A3L		
J	30682	BOLT – HEX HD M10 X 1.5 X 90-8.8-A3L		
K	135304	BOLT – HEX HD M10 X 1.5 X 130-8.8-A3L		
L	135460	BOLT – HH 1/2-13 NC X 1.5 LG L9 ZP		
M	136027	WASHER – HARD ASTM F436 1/2-361-460HV-AB2C		
N	148800	BOLT – HEX FLG HD M12 X 1.75 X 25 X SPCL-10.9-A3L		

142. Includes bearing, inner sleeve, and thrust washer.
143. Refer to Section *61 Traction Drive Pump, page 143*.
144. Refer to Section *63 Left-Hand Pump Stack, page 147*.

61 Traction Drive Pump

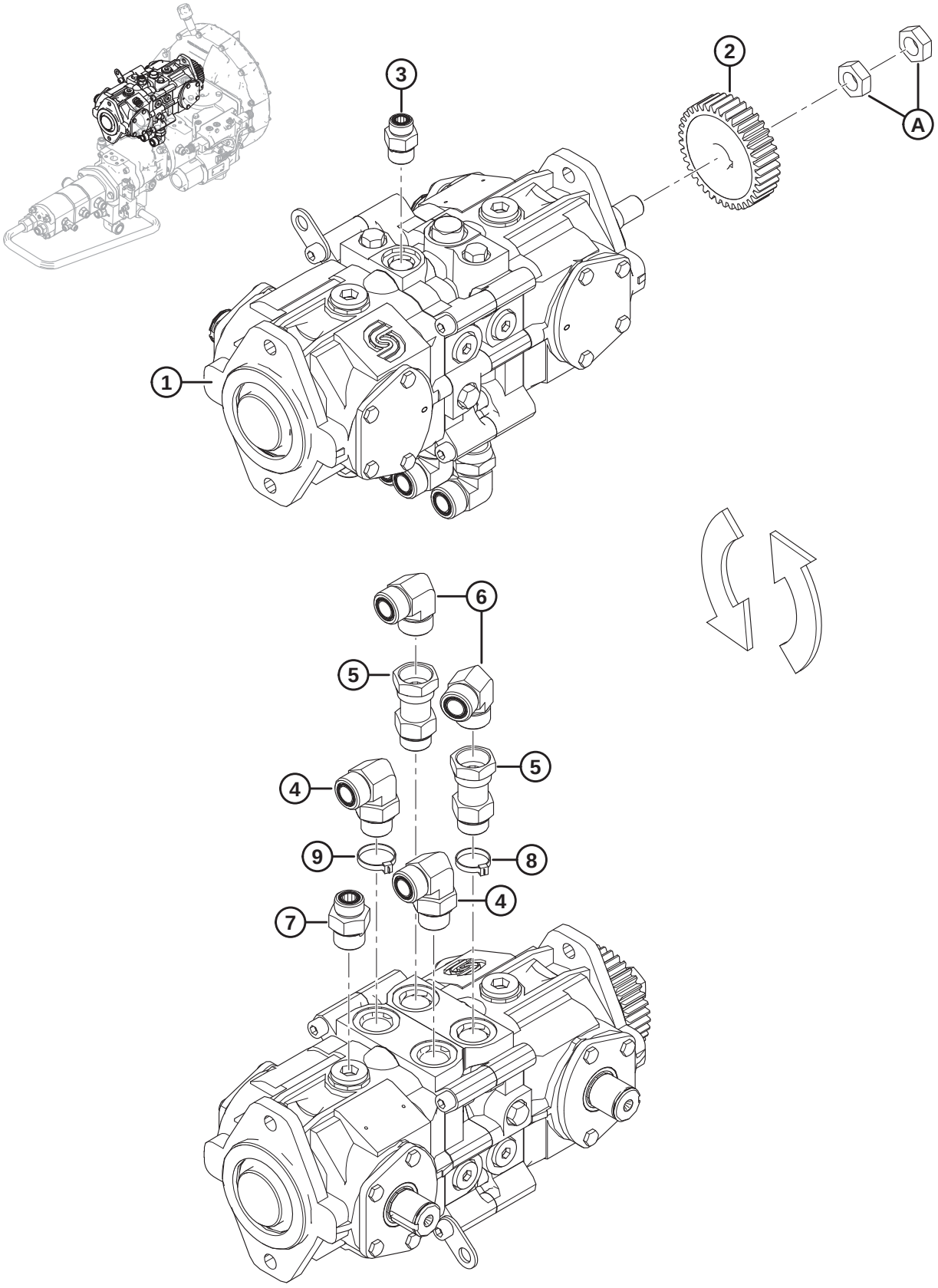

TRACTION DRIVE PUMP

Ref	Part Number	Description	Qty	Serial Number
1	201516	PUMP – VARIABLE AXIAL PISTON [145]	1	
2	183955	GEAR – TRACTION PUMP (37T)	1	
3	184463	FITTING – ADAPTER 8 MORFS X 10 MORB	1	
	44210	O-RING – #10 ORB		
	135866	O-RING – #8 ORFS		
4	135821	FITTING – ELBOW 90° HYD (C, D)	2	
	30971	O-RING – #12 ORB		
	135868	O-RING – #12 ORFS		
5	136501	FITTING – ADAPTER (A, B)	2	
	30971	O-RING – #12 ORB		
6	136499	FITTING – ELBOW 90° HYD	2	
	135868	O-RING – #12 ORFS		
7	135786	FITTING – ADAPTER (LL1)	1	
	30971	O-RING – #12 ORB		
	135867	O-RING – #10 ORFS		
8	40702	FASTENER – CABLE TIE (RED)	1	
9	40701	FASTENER – CABLE TIE (YELLOW)	1	
A	7674	NUT – HEX JAM 3/4-16 UNF GR 5 ZP		

145. For service parts, refer to Section *62 Traction Drive Pump – Service Parts, page 145*.

62 Traction Drive Pump – Service Parts

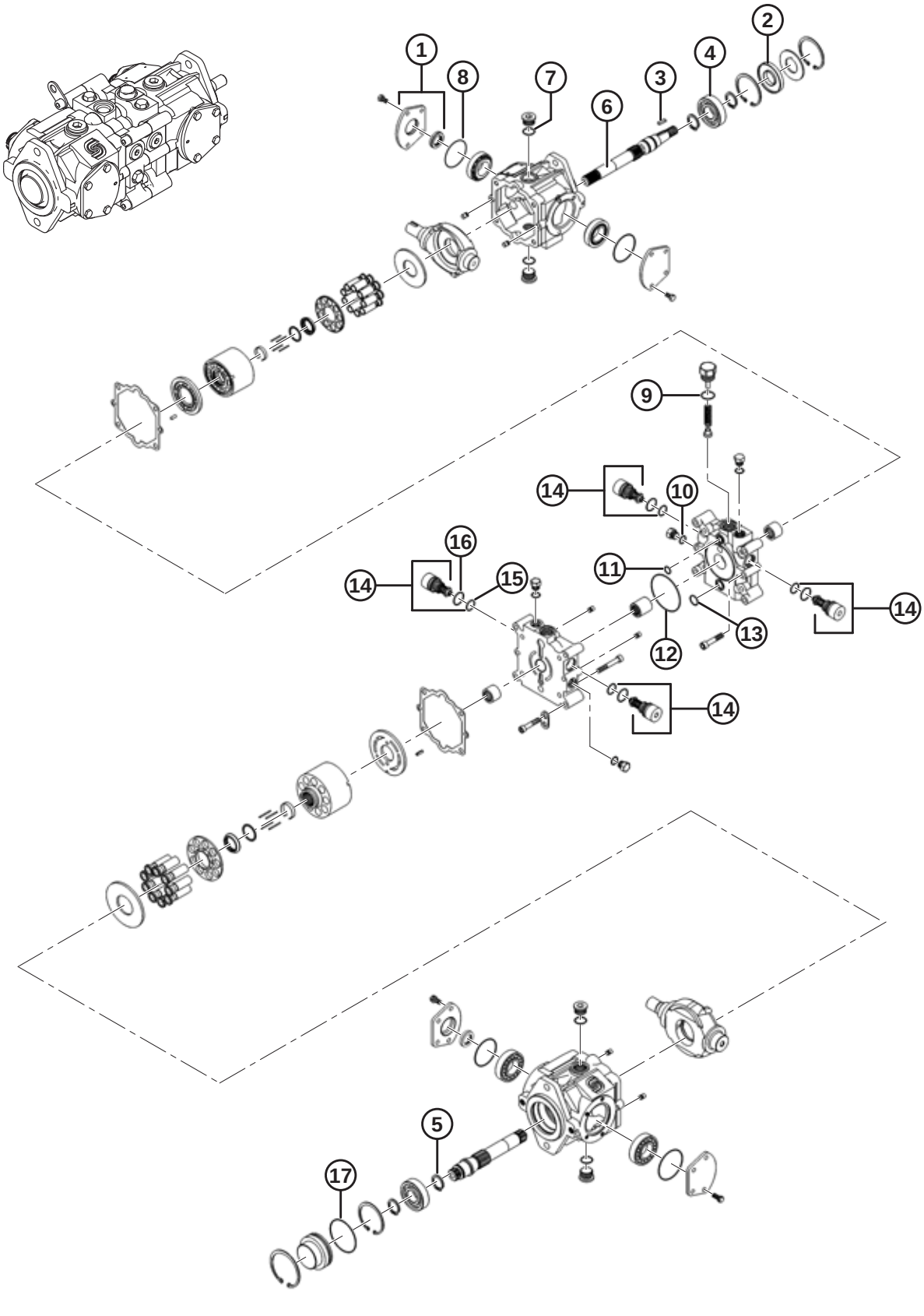

NOTE:

All illustrated parts that are **NOT** in the parts list are non-serviced parts, illustrated for reference only.

Ref	Part Number	Description	Qty	Serial Number
	201516	PUMP – VARIABLE AXIAL PISTON [146]		
1	207807	ASSEMBLY – TRUNNION COVER SEAL	2	
2	203048	SEAL – LIP	1	
3	111895	KEY	1	
4	111896	BEARING – ROLLER	1	
5	111897	RING – RETAINING	4	
6	111898	SHAFT – FRONT	1	
7	111899	O-RING	4	
8	111900	O-RING	4	
9	111907	O-RING	1	
10	111908	O-RING	4	
11	111909	O-RING	1	
12	111910	O-RING	1	
13	111911	O-RING	1	
14	306528	VALVE – SCR 385 BAR/5580 PSI	4	
15	111913	O-RING	1	
16	111914	O-RING	1	
17	111919	O-RING	1	

146. Refer to Section *61 Traction Drive Pump, page 143*.

63 Left-Hand Pump Stack

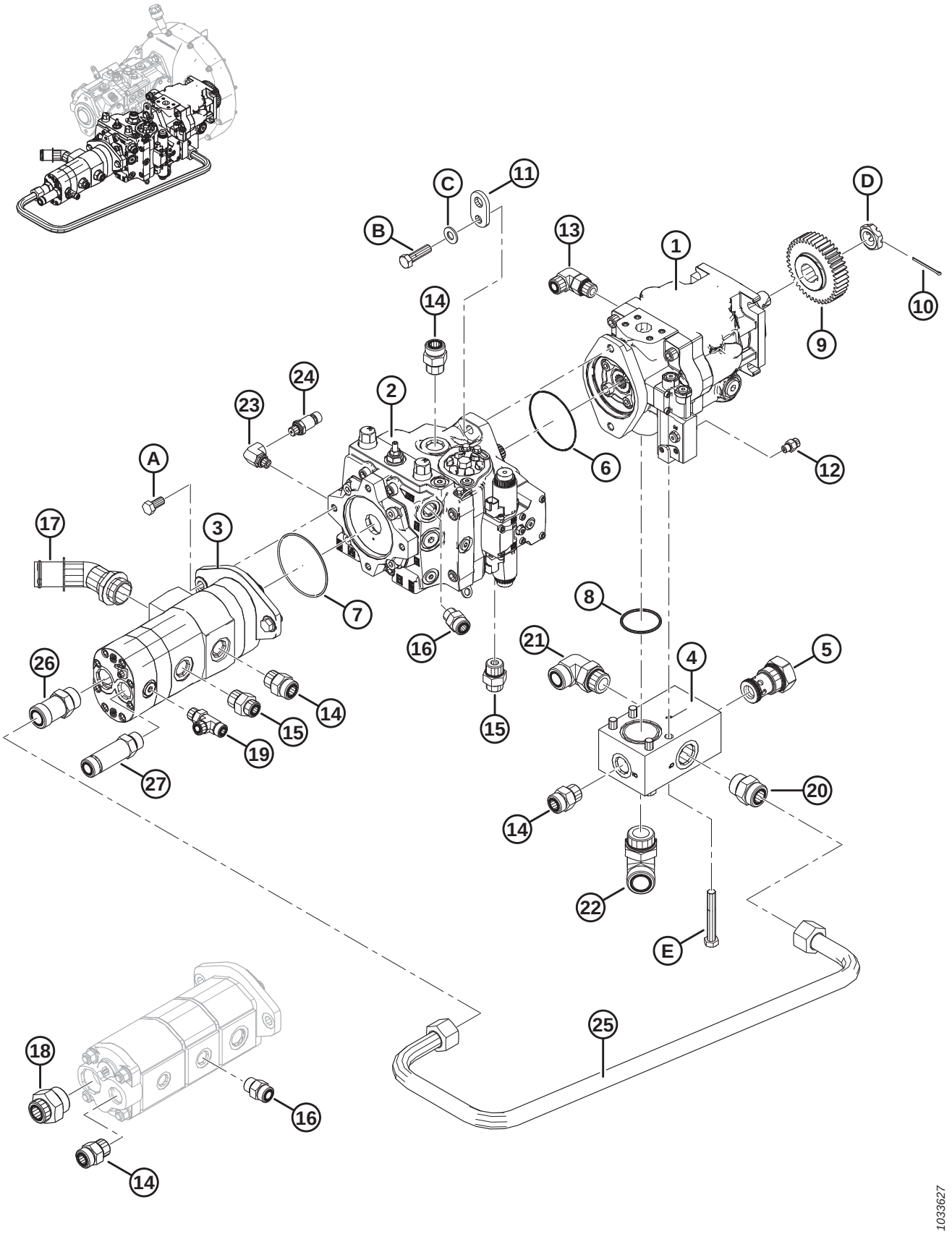

LEFT-HAND PUMP STACK

Ref	Part Number	Description	Qty	Serial Number
1	201523	PUMP – PISTON, FAN/LIFT [147]	1	
2	203654	PUMP – PISTON, DISC/KNIFE [148]	1	
3	205125	PUMP – TRIPLE GEAR [149]	1	378278–
	306272	KIT – SERVICE, GEAR PUMP REPLACE [150]	A/R	–378277
	306359	SEAL KIT [151]		
	208167	SEAL KIT [152]		
4	202888	MANIFOLD – INLET [153]	1	
	208284	SEAL KIT		
5	208282	VALVE – CHECK	1	
6	134056	O-RING – 1.78 AND 96 MM I.D.	1	
7	30045	O-RING – 2.62 AND 101.27 MM I.D.	1	
8	112867	O-RING – 3.53 AND 56.1 MM I.D.	1	
9	183957	GEAR – HDR PUMP (41T)	1	
10	21006	PIN – COTTER 1/8 DIA X 2.0 ZP	1	
11	162104	SUPPORT – PUMP LIFT	1	
12	252698	FITTING – ADAPTER, SCREEN HYDRAULIC	1	
	50223	O-RING – #4 ORB		
	135957	O-RING – #4 ORFS		
13	136089	FITTING – ELBOW 90° HYD	1	
	44210	O-RING – #10 ORB		
	135867	O-RING – #10 ORFS		
14	135788	FITTING – ADAPTER [154]	3	
	30971	O-RING – #12 ORB		
	135868	O-RING – #12 ORFS		
15	135786	FITTING – ADAPTER	2	
	30971	O-RING – #12 ORB		
	135867	O-RING – #10 ORFS		

147. For service parts, refer to Section *66 Lift/Fan Pump – Service Parts, page 155*.
148. For service parts, refer to Section *65 Disc/Knife Drive Pump – Service Parts, page 153*.
149. Turolla-made gear pump (black). To service Salami gear pump (Aluminum), order Gear Pump Replace Service kit (MD #306272).
150. Kit is used to replace a Salami-made gear pump (Aluminum). For service parts, refer to Section *64 Gear Pump Replace Service Kit, page 151*.
151. This seal kit services Turolla-made gear pumps (black). To service a salami gear pump (Aluminum), order seal kit MD #208167.
152. This seal kit services Salami-made gear pumps (Aluminum). To service a Turolla gear pump (black), order seal kit MD #306359.
153. Includes check valve (MD #208282).
154. Quantity is three, was previously four. Fourth fitting at the end of the gear pump is a service part only for 2020 and prior windrowers with a Salami-made gear pump (Aluminum).

LEFT-HAND PUMP STACK

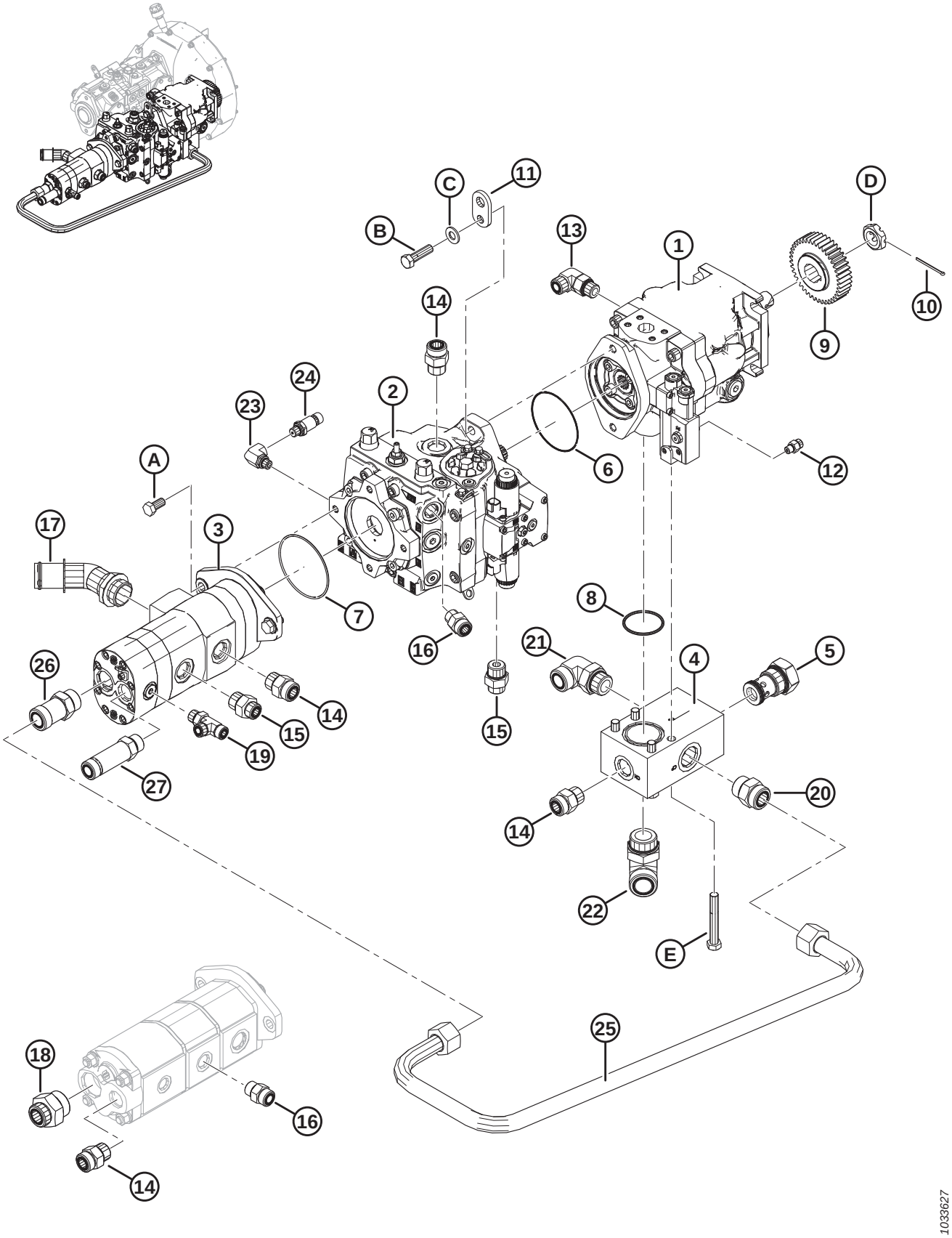

LEFT-HAND PUMP STACK

Ref	Part Number	Description	Qty	Serial Number
16	184461	FITTING – ADAPTER 10 MORFS X 10 MORB [155]	1	
	44210	O-RING – #10 ORB		
	135867	O-RING – #10 ORFS		
17	42030	FITTING – 45° BEADED	1	
	50222	O-RING – #20 ORB		
18	135792	FITTING – ADAPTER [156]	1	–378277
	50222	O-RING – #20 ORB		
	135554	O-RING – #16 ORFS		
19	136258	FITTING – TEE HYD	1	
	44209	O-RING – #8 ORB		
	135866	O-RING – #8 ORFS		
20	135791	FITTING – ADAPTER	1	
	50220	O-RING – #16 ORB		
	135554	O-RING – #16 ORFS		
21	135734	FITTING – ELBOW 90° HYD	1	
	50220	O-RING – #16 ORB		
	135554	O-RING – #16 ORFS		
22	136363	FITTING – ELBOW 90° HYD	1	
	50222	O-RING – #20 ORB		
	135869	O-RING – #20 ORFS		
23	183524	FITTING – ELBOW 90°	1	
	50219	O-RING – #6 ORB		
24	207346	SENDER – PRESSURE	1	
25	202956	LINE – HYDRAULIC, 1 IN. DIA	1	
26	320202	FITTING – CONNECTOR HYD SPECIAL	1	
	50220	O-RING – #16 ORB		
	135554	O-RING – #16 ORFS		
27	320238	FITTING – CONNECTOR HYD SPECIAL	1	
	30971	O-RING – #12 ORB		
	135868	O-RING – #12 ORFS		
A	50155	BOLT – HEX HD TFL M12 X 1.75 X 25-8.8-A3L		
B	21565	BOLT – HH 1/2 NC X 1.75 LG GR 5 ZP		
C	135369	WASHER – HARDENED		
D	137375	NUT – SLOTTED JAM 1.0 IN.-20 UNEF-ZN PL		
E	21581	BOLT – HH 1/2 NC X 3.5 LG GR 5 ZP		

155. Quantity is one, was previously two. Second fitting at the side of the gear pump is a service part only for 2020 and prior windrowers with a Salami-made gear pump (Aluminum).
156. Service part only for 2020 and prior windrowers with a Salami-made gear pump (Aluminum).

64 Gear Pump Replace Service Kit

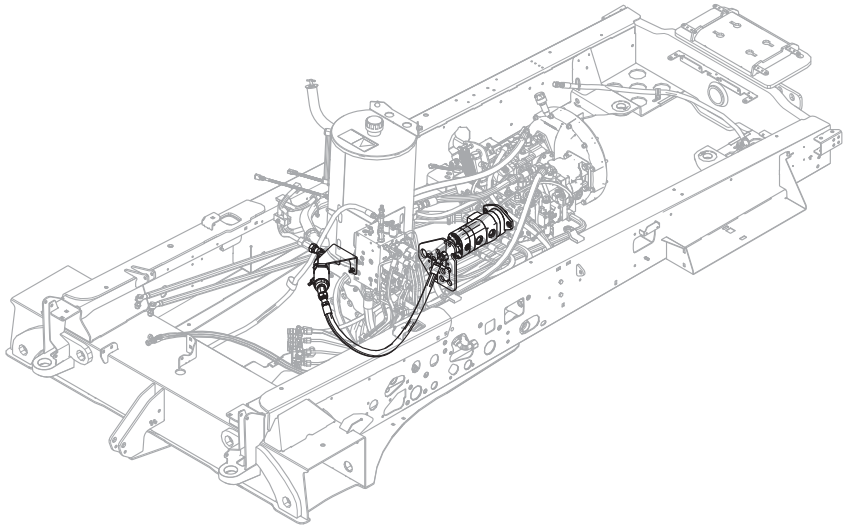

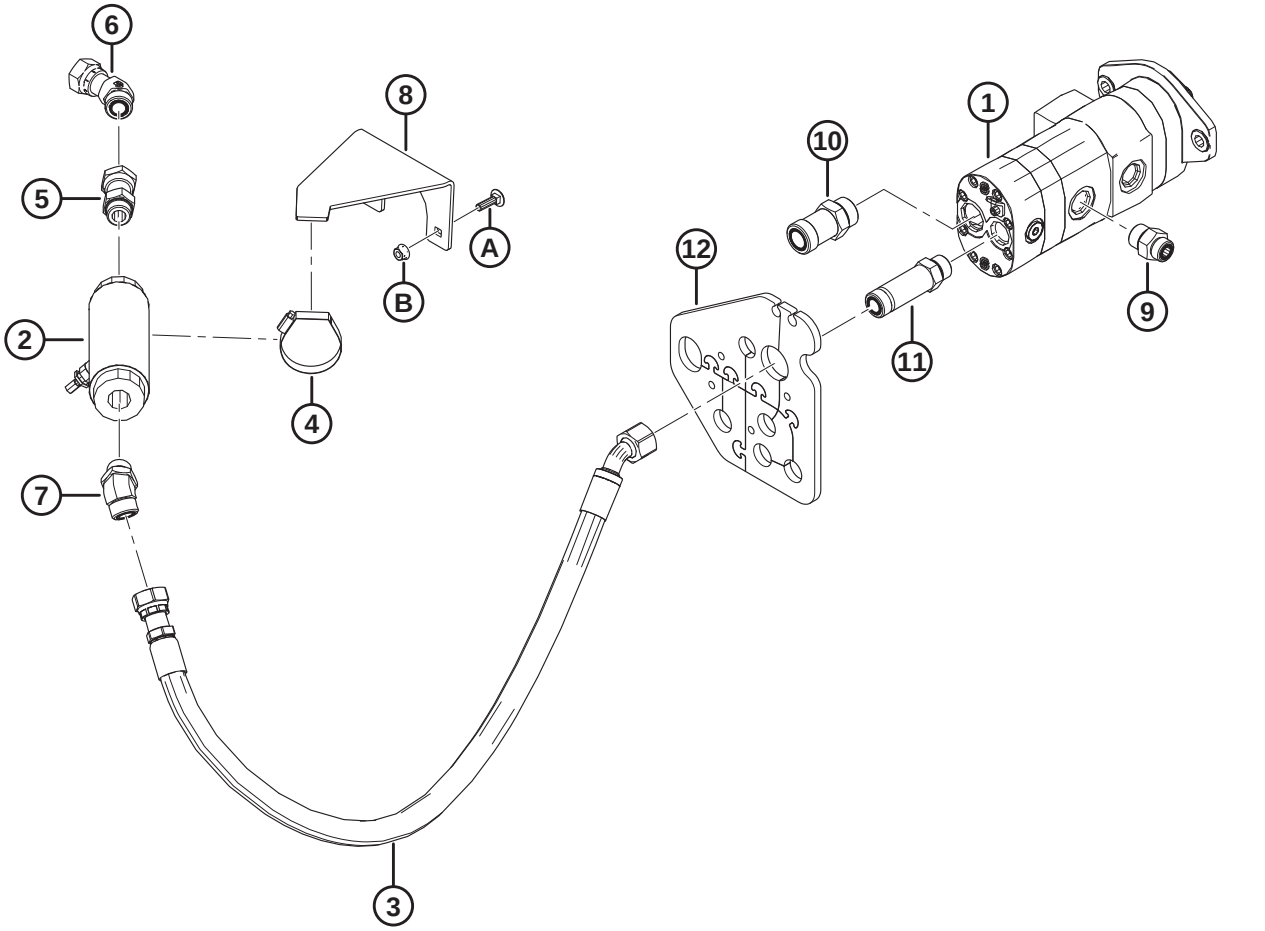

GEAR PUMP REPLACE SERVICE KIT

Ref	Part Number	Description	Qty	Serial Number
	306272	KIT – SERVICE, GEAR PUMP REPLACE [157]		
1	205125	PUMP – TRIPLE GEAR	1	
	306359	SEAL KIT		
2	209069	SUPPRESSOR – HYDRAULIC	1	
3	209109	HOSE – HYDRAULIC (4 CYLINDER)	1	
4	21995	CLAMP – HOSE GEAR TYPE	1	
5	136501	FITTING – ADAPTER HYD	1	
	30971	O-RING – #12 ORB		
6	136809	FITTING – ELBOW 45° HYD	1	
	135868	O-RING – #12 ORFS		
7	136418	FITTING – ELBOW 45° HYD	1	
	30971	O-RING – #12 ORB		
	135868	O-RING – #12 ORFS		
8	209104	SUPPORT – SUPPRESSOR	1	
9	135786	FITTING – ADAPTER	1	
	30971	O-RING – #12 ORB		
	135867	O-RING – #10 ORFS		
10	320202	FITTING – CONNECTOR HYD SPECIAL	1	
	50220	O-RING – #16 ORB		
	135554	O-RING – #16 ORFS		
11	320238	FITTING – CONNECTOR HYD SPECIAL	1	
	30971	O-RING – #12 ORB		
	135868	O-RING – #12 ORFS		
12	306323	STRAP – LINE SUPPORT	1	
A	190752	BOLT – RHSN M8 X 1.25 X 30-8.8-AA1J		
B	135337	NUT – HEX FLG CTR LK M8 X 1.25-8-AA1J		

157. Kit is used to replace Salami-made gear pumps (Aluminum) with Turolla-made gear pumps (black). Includes all listed parts and instructions.

65 Disc/Knife Drive Pump – Service Parts

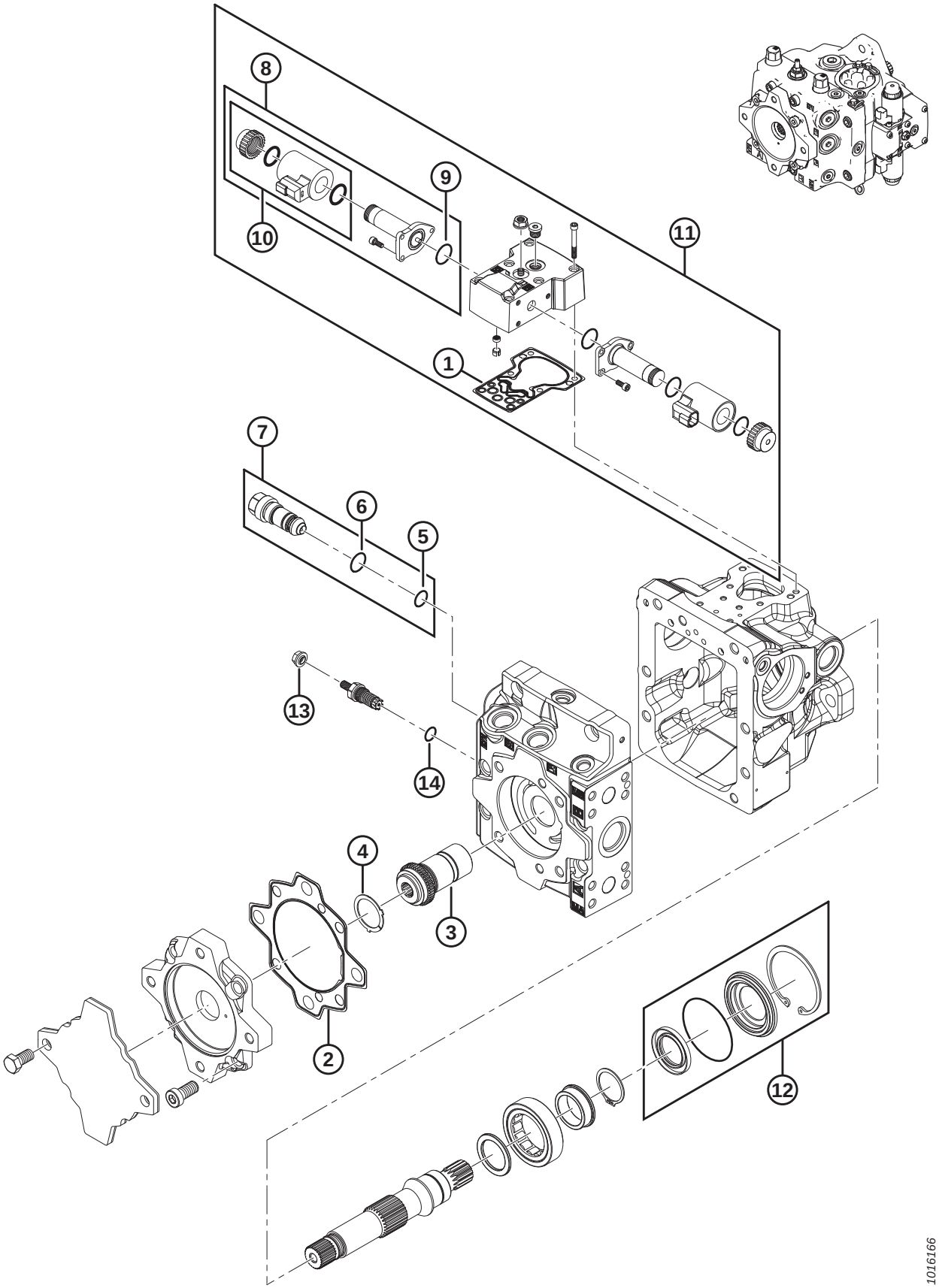

DISC/KNIFE DRIVE PUMP – SERVICE PARTS

NOTE:

All illustrated parts that are **NOT** in the parts list are non-serviced parts, illustrated for reference only.

Ref	Part Number	Description	Qty	Serial Number
	203654	PUMP – PISTON, DISC/KNIFE		
1	252376	GASKET – CONTROL	1	
2	252382	SEAL – ADAPTER	1	
3	203442	COUPLING – SHAFT 13T	1	
4	252383	PLATE – THRUST	1	
5	252384	O-RING	1	
6	252385	O-RING	1	
7	252386	VALVE – RELIEF	1	
8	252387	VALVE – SOLENOID	2	
9	252388	O-RING	2	
10	252389	KIT – COIL	2	
11	208473	CONTROL – 12V EDC	1	
12	252381	KIT – SHAFT SEAL	1	
13	252391	NUT – SEAL	1	
14	111907	O-RING	1	

66 Lift/Fan Pump – Service Parts

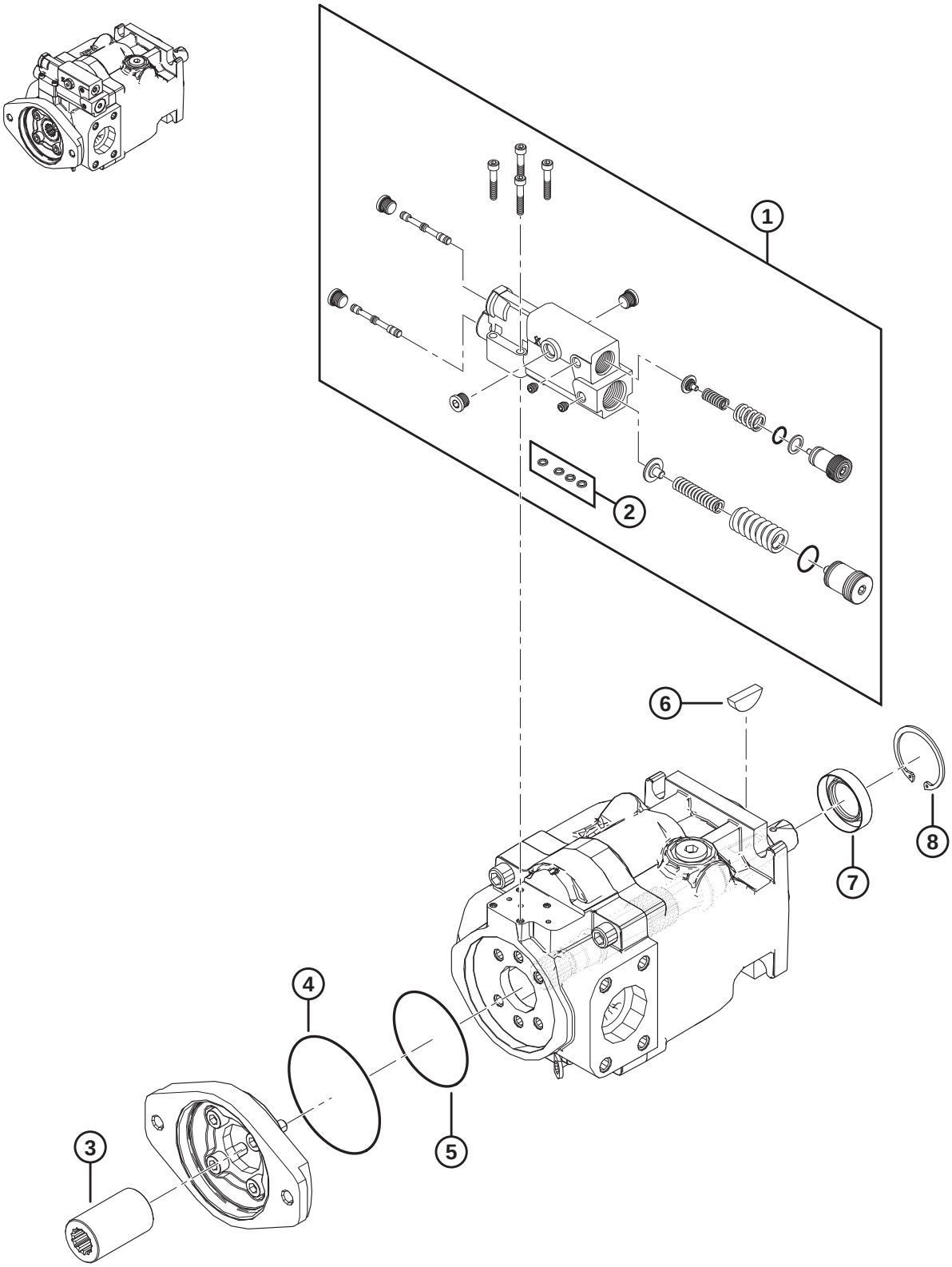

LIFT/FAN PUMP – SERVICE PARTS

NOTE:

All illustrated parts that are **NOT** in the parts list are non-serviced parts and are illustrated for reference only.

Ref	Part Number	Description	Qty	Serial Number
	201523	PUMP – PISTON, LIFT/FAN		
1	208424	KIT – CONTROL	1	
2	111935	SEAL – RING	1	
3	162212	COUPLING	1	
4	111939	O-RING	1	
5	111938	O-RING	1	
6	111942	KEY	1	
7	111941	SEAL – LIP	1	
8	21235	RING – INT. RETAINING	1	

67 Wheel Drive Assembly – Ten Bolt

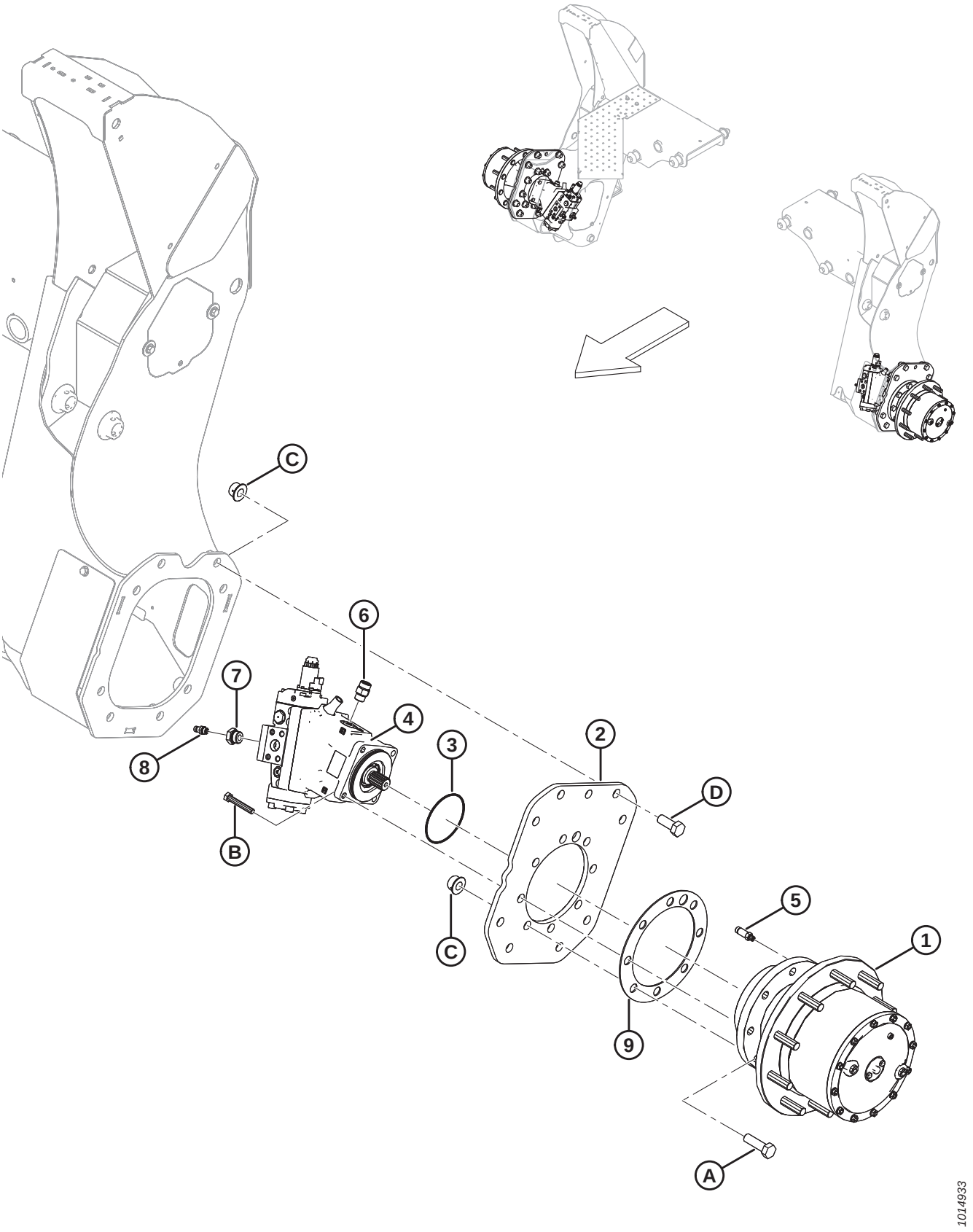

WHEEL DRIVE ASSEMBLY – TEN BOLT

Ref	Part Number	Description	Qty	Serial Number
1	306386	DRIVE – WHEEL 27.875:1 [158]	2	
2	208330	PLATE – DRIVE MOUNT BLACK	2	
3	252244	O-RING – 117.1 MM I.D. X 3.5 MM	2	
4	306170	KIT – WHEEL MOTOR [159]	2	
5	136131	FITTING – CONNECTOR HYD LONG	2	
	50223	O-RING – #4 ORB		
	135957	O-RING – #4 ORFS		
6	184461	FITTING – ADAPTER 10 MORFS X 10 MORB (L2)	2	
	44210	O-RING – #10 ORB		
	135867	O-RING – #10 ORFS		
7	252263	FITTING – ADAPTER (A, B)	4	
	30971	O-RING – #12 ORB		
8	135587	NIPPLE – HYDRAULIC	4	
	50219	O-RING – #6 ORB		
9	208919	SPACER – WHEEL MOTOR	2	
A	136157	BOLT – HEX HD M20 X 2.5 X 65-10.9-A3L		
B	135155	BOLT – HEX HD M12 X 1.75 X 75-8.8-A3L		
C	136122	NUT – HEX FLG CTR LOC M20 X 2.5-10-A3L		
D	136158	BOLT – HEX HD TFL M20 X 2.5 X 50-10.9-A3L		

158. For service parts, refer to Section *69 Wheel Drive – Service Parts, Ten Bolt, page 161*.
159. Includes complete wheel motor (NSS) and installation instructions. For service parts, refer to Section *71 Wheel Drive Motor, page 167*.

68 Wheel Drive Assembly – Twelve Bolt

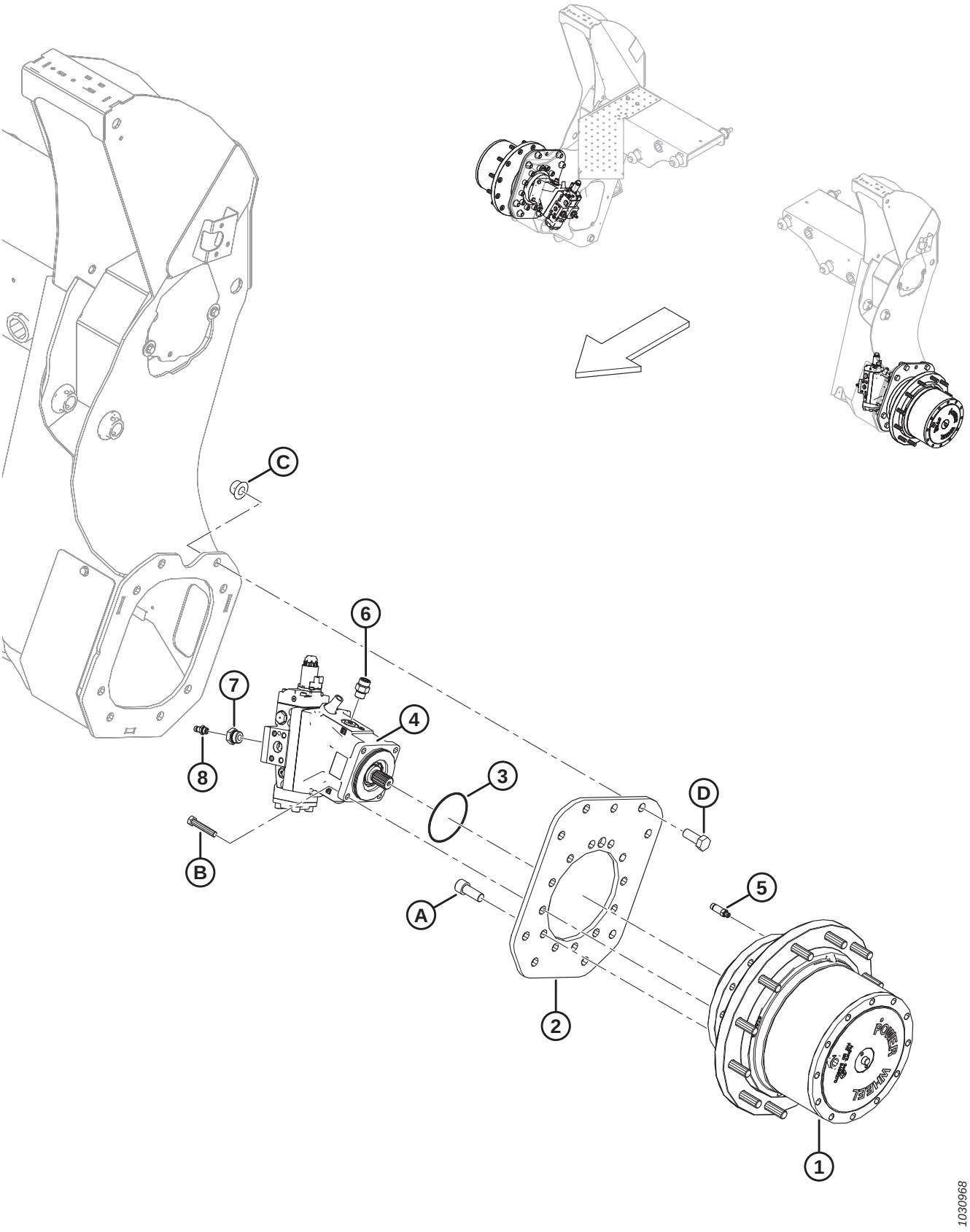

WHEEL DRIVE ASSEMBLY – TWELVE BOLT

Ref	Part Number	Description	Qty	Serial Number
1	310366	DRIVE – HD WHEEL, MD [160]	2	
2	310688	PLATE – DRIVE MOUNT HD BLACK	2	
3	252244	O-RING – 117.1 MM I.D. X 3.5 MM	2	
4	306170	KIT – WHEEL MOTOR [161]	2	
5	136131	FITTING – CONNECTOR HYD LONG	2	
	50223	O-RING – 1.83 X 8.92		
	135957	O-RING – 1.78 X 7.65		
6	184461	FITTING – ADAPTER HYD	2	
	44210	O-RING – 2.46 X 19.18		
	135867	O-RING – 1.78 X 15.60		
7	252263	FITTING – ADAPTER	4	
	30971	O-RING – 2.95 X 23.47		
8	135587	NIPPLE – HYDRAULIC	4	
	50219	O-RING – 1.98 X 11.89		
A	320200	SCREW – HEX SOC HD TFL M20 X 2.5 X 50-10.9-ZINC		
B	21880	BOLT – HEX HD 1/2-13 X 2.75 GR5 AA1J		
C	136122	NUT – HEX FLG CTR LOC M20 X 2.5-10-A3L		
D	136158	BOLT – HEX HD M20 X 2.5 X 65-10.9-A3L		

160. For service parts, refer to Section *70 Wheel Drive – Service Parts, Twelve Bolt, page 165*.
161. Includes complete wheel motor (NSS) and installation instructions. For service parts, refer to Section *71 Wheel Drive Motor, page 167*.

69 Wheel Drive – Service Parts, Ten Bolt

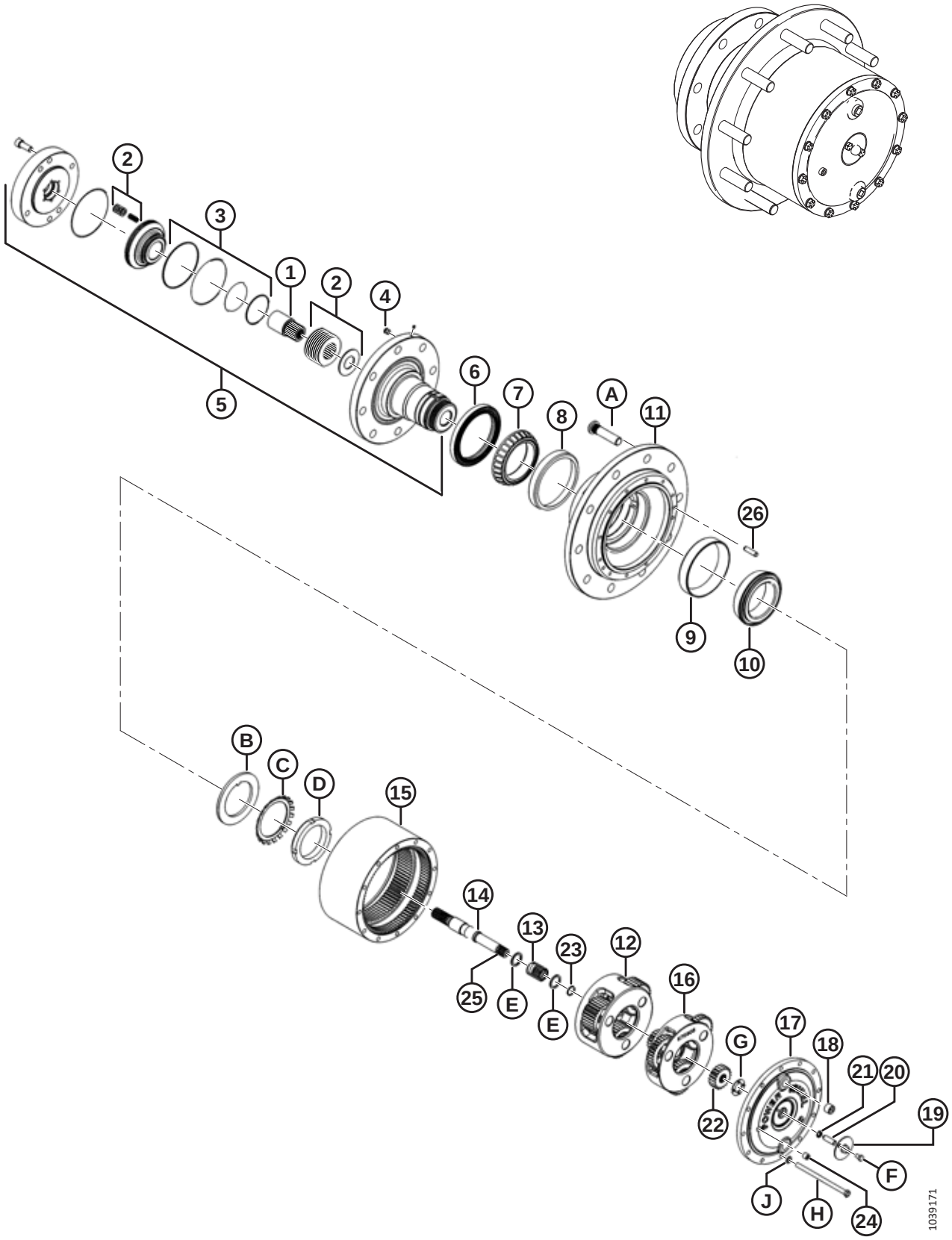

NOTE:

All illustrated parts that are **NOT** in the parts list are non-serviced parts, illustrated for reference only.

Ref	Part Number	Description	Qty	Serial Number
	306386	DRIVE – WHEEL 27.875:1 [162]		
1	208451	COUPLING – MOTOR	1	
2	208363	KIT – FRICTION DISC	1	
3	208452	SEAL KIT	1	
4	163158	PLUG – PIPE	1	
5	208453	SPINDLE – ASSY	1	
6	163753	SEAL – OIL	1	
7	**306670**	**BEARING – CONE**	**1**	
8	**306671**	**BEARING – CUP**	**1**	
9	**306672**	**BEARING – CUP**	**1**	
10	**306673**	**BEARING – CONE**	**1**	
11	**306395**	**HUB – 10 BOLT M20**	**1**	**396190–**
	166694	HUB – 10 BOLT M20 [163]	1	**–396189**
12	208463	CARRIER ASSEMBLY – SECONDARY	1	
13	208465	SPRING – DISENGAGE	1	
14	208464	SHAFT – INPUT	1	
15	306393	RING GEAR	1	396190–
	111258	RING GEAR [164]	1	–396189
16	208462	CARRIER ASSEMBLY – PRIMARY	1	
17	49874	COVER – LARGE	1	
18	30203	PLUG – MAGNETIC PIPE SQ SOCKET	2	
19	30205	COVER – DISENGAGE	1	
20	111093	PLUNGER – SHAFT DISENGAGE	1	
21	111105	O-RING (4 LOBED)	1	
22	208467	GEAR – SUN	1	
23	208468	RING – RETAINING	1	
24	50231	PLUG – PIPE DRYSEAL 0.25 NPT	1	
25	42765	RING – RETAINING INTERNAL [165]	1	
26	**306394**	**PIN – COILED SPRINGS**	**2**	**396190–**
A	205188	BOLT – WHEEL (PRESS-IN) M20 X 82 MM LG		
B	163747	WASHER – THRUST		
C	163746	WASHER – EXT. TOOTH LOCK		
D	163745	NUT – LOCK		
E	208466	WASHER – FLAT		
F	111099	BOLT – HEX HD 5/16 NC X 0.5 LG GR 5 ZP		
G	30200	WASHER – THRUST		

162. Refer to Section *67 Wheel Drive Assembly – Ten Bolt, page 157*.
163. Service part only for machines made in model year 2020 and prior. For model year 2021 and later, or for machines that have been serviced with new wheel drives, order hub MD #306395.
164. Service part only for machines made in model year 2020 and prior. For model year 2021 and later, or for machines that have been serviced with new wheel drives, order ring gear MD #306393.
165. Located at the end of input shaft (MD #208464).

WHEEL DRIVE – SERVICE PARTS, TEN BOLT

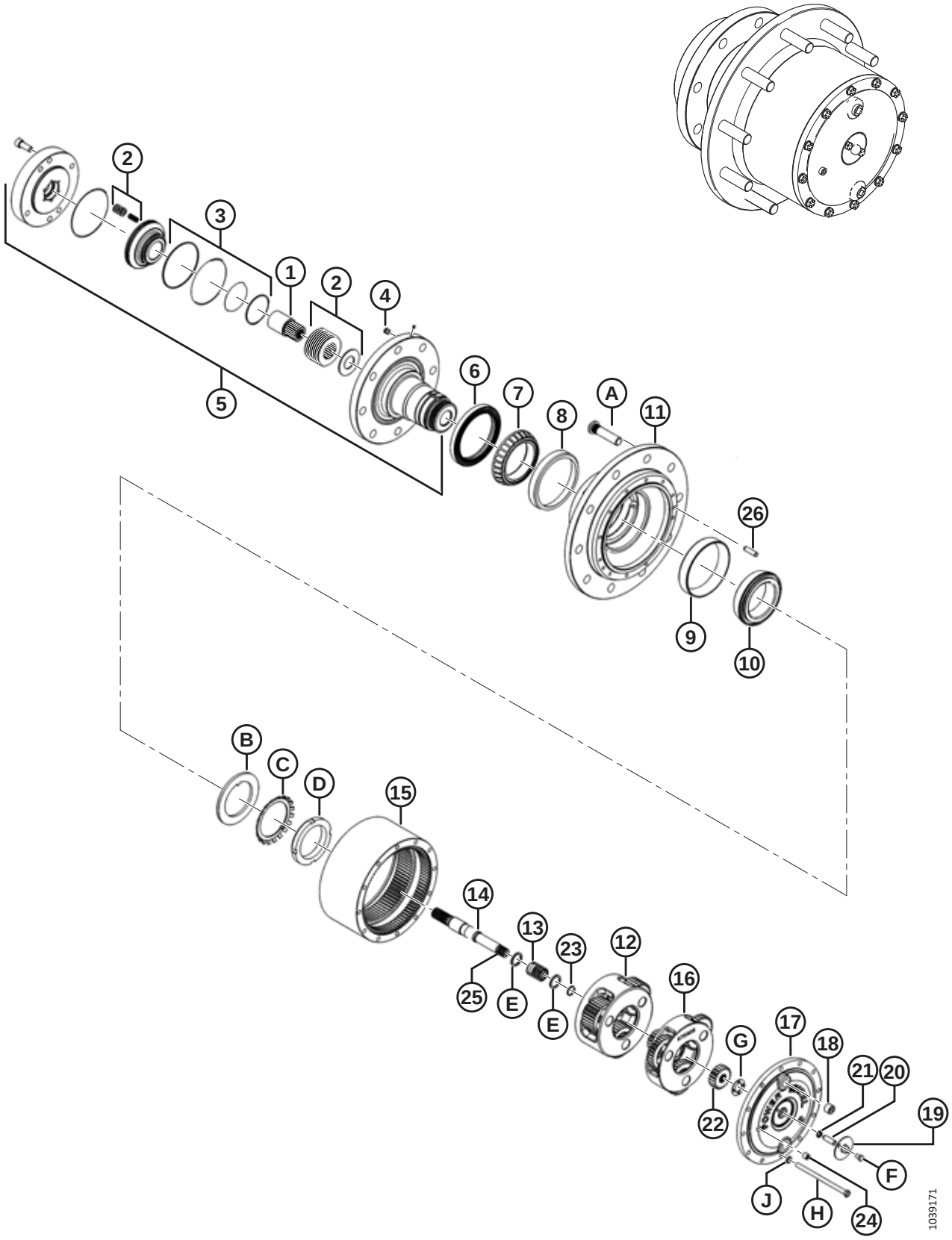

WHEEL DRIVE – SERVICE PARTS, TEN BOLT

Ref	Part Number	Description	Qty	Serial Number
H	49879	BOLT – HEX HD		
J	30191	WASHER – HARDENED		

70 Wheel Drive – Service Parts, Twelve Bolt

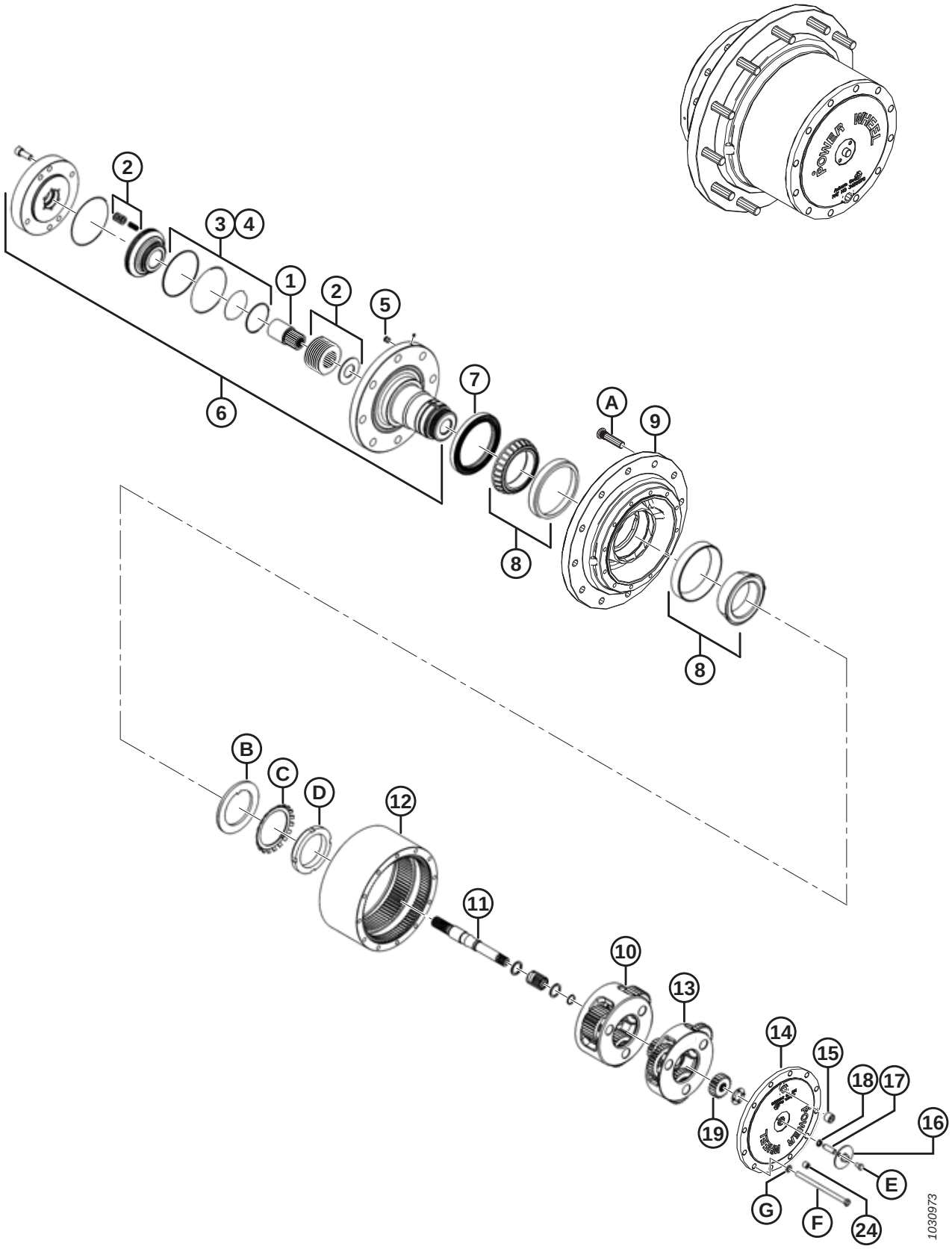

NOTE:

All illustrated parts that are **NOT** in the parts list are non-serviced parts, illustrated for reference only.

Ref	Part Number	Description	Qty	Serial Number
	310366	DRIVE – HD WHEEL, MD [166]		
1	310668	KIT – COUPLING	1	
2	310684	KIT – BRAKE DISK	1	
3	310685	KIT – BRAKE SEAL	1	
4	310686	KIT – DRIVE SEAL	1	
5	50230	FITTING – PLUG HYD HEX SOCNPTF	1	
6	310662	SPINDLE (ASSEMBLY)	1	
7	310672	SEAL – OIL	1	
8	310687	KIT – DRIVE BEARING	1	
9	310663	HUB – ASSY	1	
10	310676	CARRIER ASSEMBLY – SECONDARY	1	
11	310666	KIT – INPUT SHAFT	1	
12	310661	GEAR – RING	1	
13	310677	CARRIER ASSEMBLY – PRIMARY	1	
14	310678	COVER	1	
15	30203	PLUG – MAGNETIC PIPE SQ SOCKET	2	
16	**30205**	**COVER – DISENGAGE**	**1**	
17	**111093**	**SHAFT – DISENGAGE PLUNGER**	**1**	
18	**111105**	**O-RING (4 LOBED)**	**1**	
19	310683	GEAR – SUN	1	
24	50230	FITTING – PLUG HYD HEX SOCNPTF	1	
A	205188	BOLT – WHEEL (PRESS-IN) M20 X 82 MM LG		
B	310682	WASHER – THRUST		
C	310674	WASHER – LOCK		
D	310675	NUT – LOCK, HD WHEEL DRIVE		
E	310670	BOLT – HEX HD		
F	310669	BOLT – HEX HD		
G	310667	WASHER – FLAT		

166. Refer to Section *68 Wheel Drive Assembly – Twelve Bolt, page 159*.

71 Wheel Drive Motor

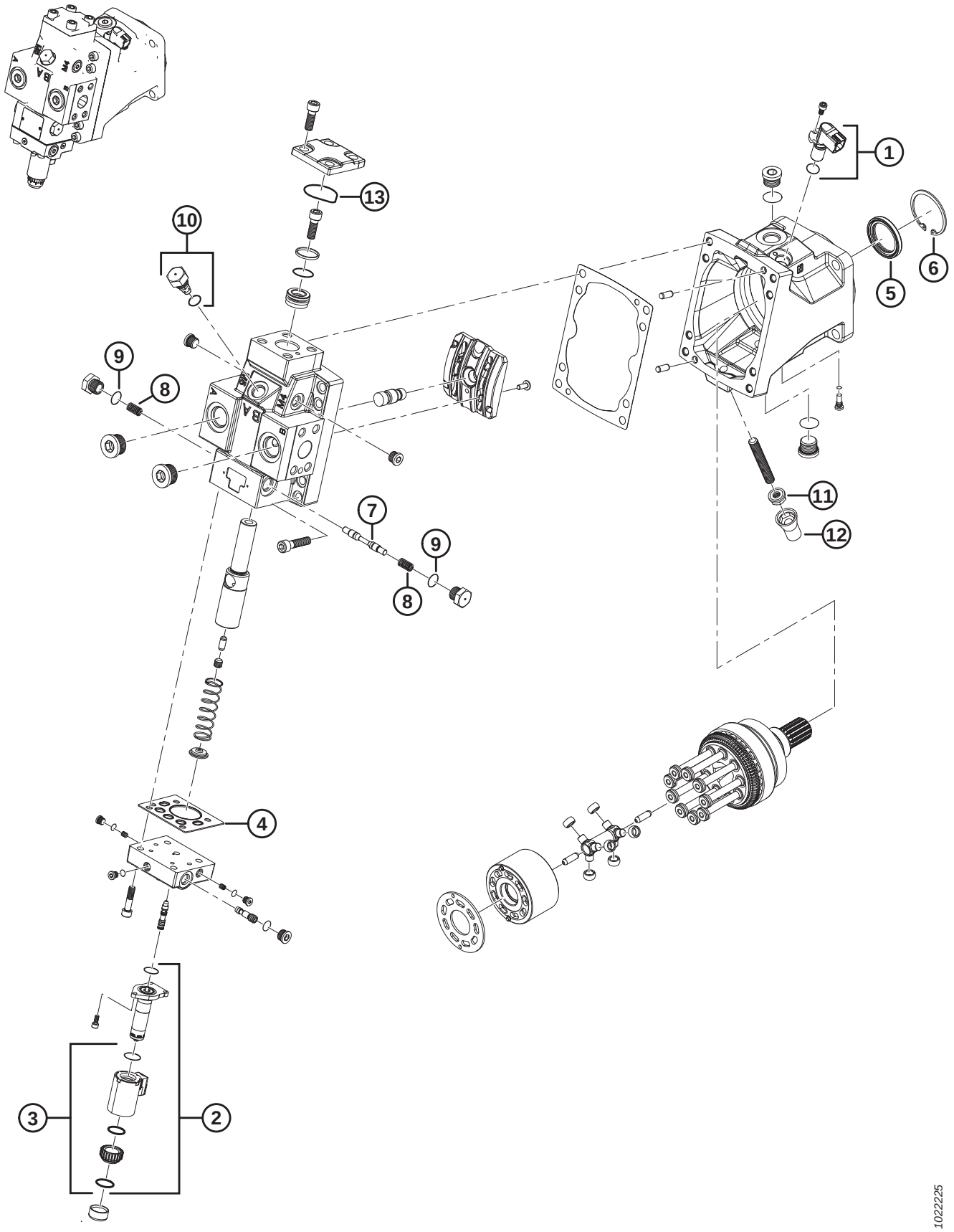

NOTE:

All illustrated parts that are **NOT** in the parts list are non-serviced parts, illustrated for reference only.

Ref	Part Number	Description	Qty	Serial Number
	306170	KIT – WHEEL MOTOR [167]		
1	204014	SENSOR – SPEED	1	
2	208740	VALVE WITH SOLENOID	1	
3	208741	COIL – SOLENOID	1	
4	208742	GASKET – CONTROL	1	
5	208743	SEAL – LIP	1	
6	208744	RING – RETAINING	1	
7	208745	VALVE – SPOOL	1	
8	208746	SPRING – VALVE	2	
9	208747	O-RING	3	
10	208748	VALVE – LOOP FLUSH	1	
11	183602	NUT – SEAL	1	
12	208751	CAP – ADJUSTER	1	
13	208752	O-RING	1	

167. Includes complete wheel motor (NSS) and installation instructions. Refer to Section *67 Wheel Drive Assembly – Ten Bolt, page 157* and Section *68 Wheel Drive Assembly – Twelve Bolt, page 159*.

72 Header Drive – Frame Interface

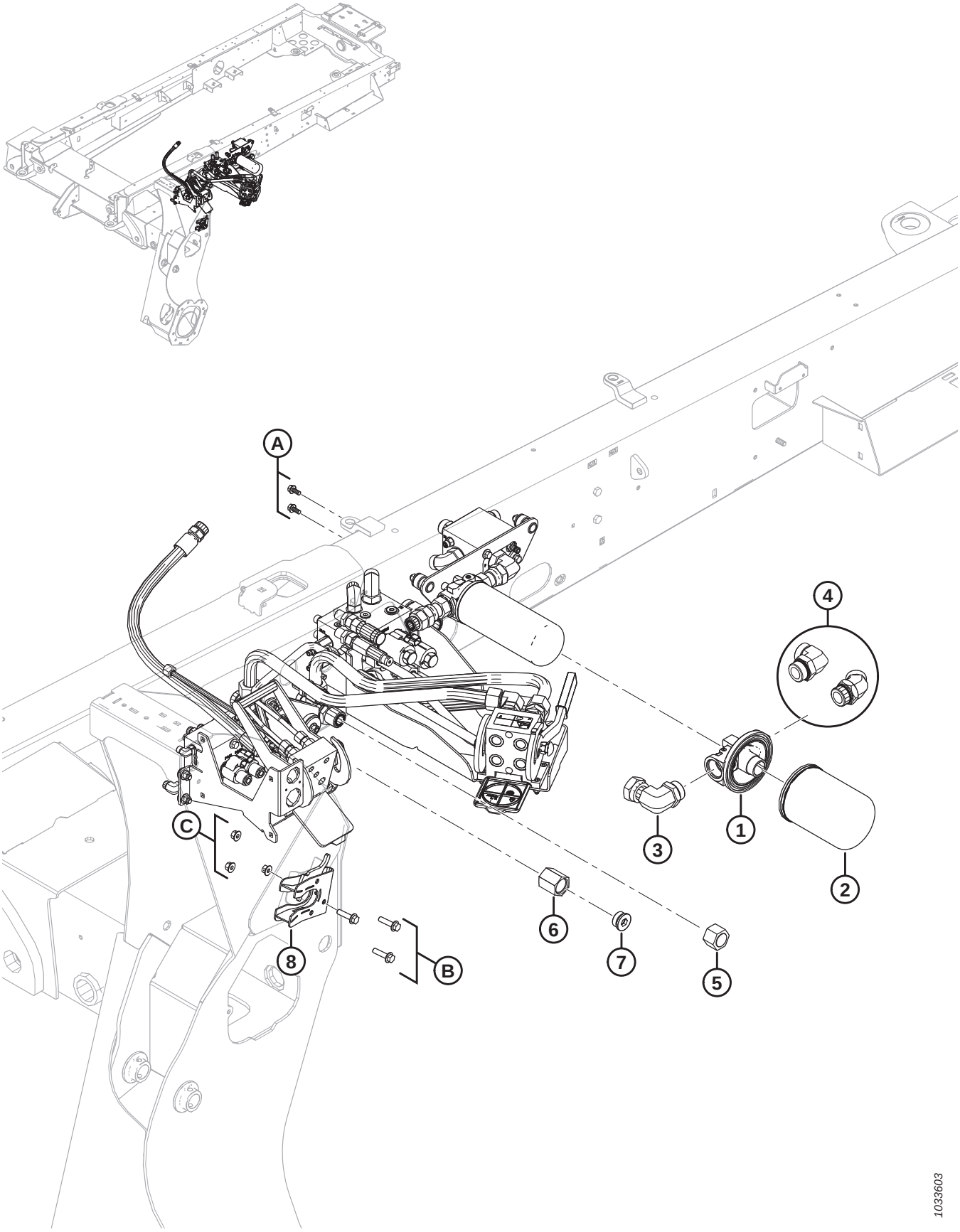

HEADER DRIVE – FRAME INTERFACE

Ref	Part Number	Description	Qty	Serial Number
1	151974	FILTER HEAD – 1-5/8 IN.-12 SAE (#20)	1	
2	320360	FILTER – HYD C/W 2X SEALS [168]	1	
3	136404	FITTING – ELBOW 90° HYD	1	
	50222	O-RING – #20 ORB		
4	136460	FITTING – ELBOW 45° HYD [169]	1	–321189
	50222	O-RING – #20 ORB		
	135869	O-RING – #20 ORFS		
	136363	FITTING – ELBOW 90° HYD [170]	1	321190–
	50222	O-RING – #20 ORB		
	135869	O-RING – #20 ORFS		
5	135718	CAP – HYD SAE, #16 ORFS	1	
6	252206	FITTING – COUPLING	1	
7	136524	PLUG – HEX SOCKET	1	
8	253905	ASSEMBLY – LATCH [171]	1	
	243995	BRACKET – WELDMENT	1	
	253635	HOOK – WELDMENT	1	
	144505	SPRING – TORSION	1	
A	30278	BOLT – HH FLG (SER FACE) 5/16 NC X 0.75 GR 5 ZP		
B	152947	BOLT – HEX FLG HD TFL M10 X 1.5 X 40-10.9-A3L		
C	135799	NUT – HEX FLG CTR LOC M10 X 1.5-10-A3L		

168. Includes hydraulic filter element (NSS), O-Ring (NSS), and instructions.
169. Used to service model years 2016–2017 windrowers in addition to hose MD #201737. For the location of the hose, refer to Section *89 Hydraulics – Open Drive Lines, page 205*.
170. Used to service model year 2018 and later windrowers in addition to hose MD #291675. For the location of the hose, refer to Section *89 Hydraulics – Open Drive Lines, page 205*.
171. Includes the following serviceable parts: bracket MD #243995, hook MD #253635, torsion spring MD #144505, one bolt MD #152947, and one nut MD #135799.

73 Header Drive – Manifold Multicoupler Assembly

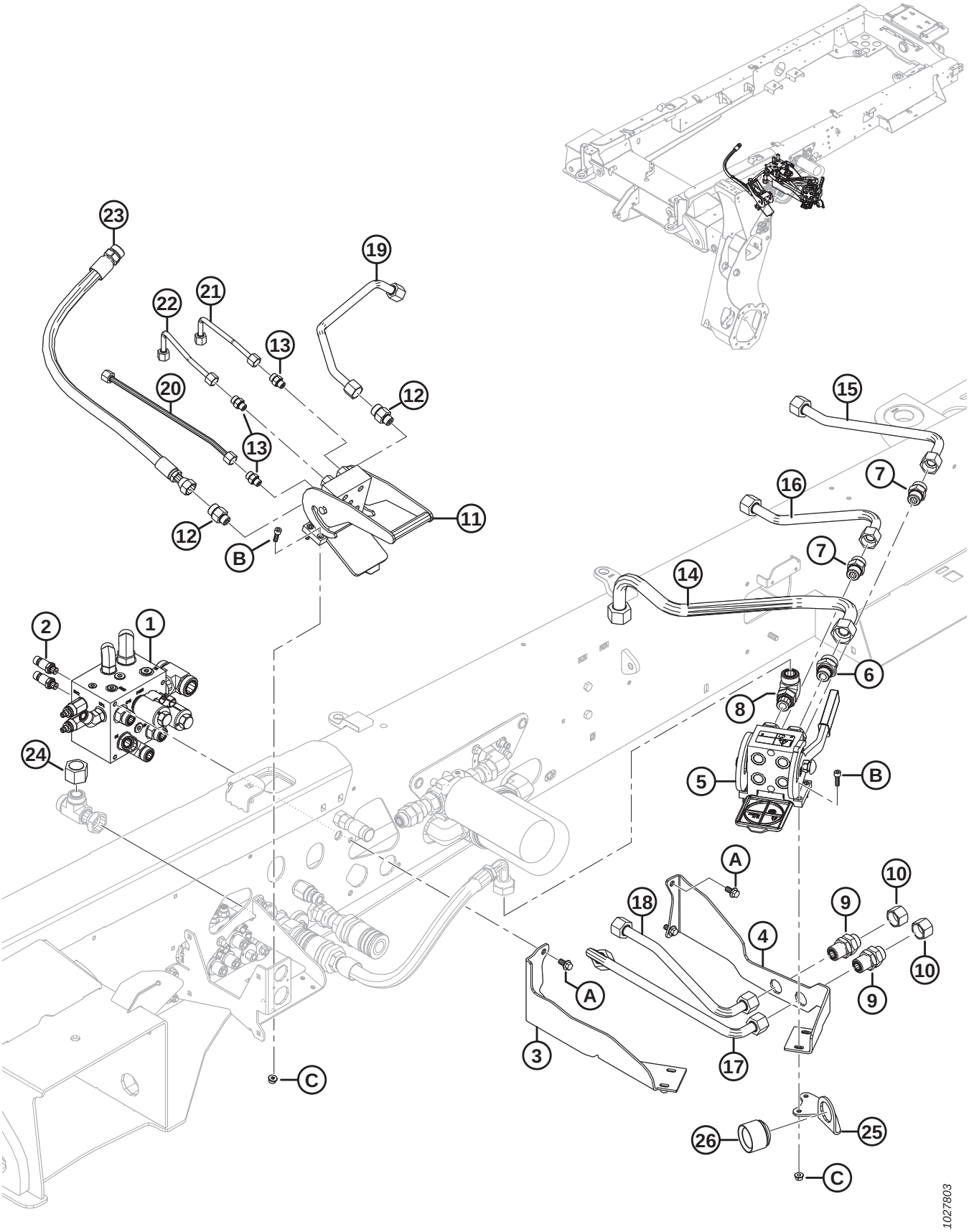

HEADER DRIVE – MANIFOLD MULTICOUPLER ASSEMBLY

Ref	Part Number	Description	Qty	Serial Number
1	203337	MANIFOLD – DRIVE [172]	1	
2	207346	SENDER – PRESSURE (GC/P292, GR/P291)	2	
3	243905	SUPPORT – MULTICOUPLER	1	
4	243906	SUPPORT – MULTICOUPLER	1	
5	243541	COUPLER – MULTI FIXED	1	
	129800	KIT – COVER MULTICOUPLER		
	129801	KIT – LATCH BUTTON MULTICOUPLER		
	208174	KIT – CARTRIDGE	4	
	209782	KIT – HANDLE		
6	135790	FITTING – ADAPTER	1	
	30971	O-RING – #12 ORB		
	135554	O-RING – #16 ORFS		
7	**135788**	**FITTING – ADAPTER**	**2**	
	30971	O-RING – #12 ORB		
	135868	O-RING – #12 ORFS		
8	136767	FITTING – ELBOW 90° HYD	1	
	30971	O-RING – #12 ORB		
	135554	O-RING – #16 ORFS		
9	136254	FITTING – BULKHEAD HYD	2	
	135868	O-RING – #12 ORFS		
10	135889	CAP – HYD SAE-12 ORFS	2	
11	153151	COUPLING – MULTI	1	
	129800	KIT – COVER MULTICOUPLER		
	129801	KIT – LATCH BUTTON MULTICOUPLER		
	129976	COUPLING 1/4 IN.	3	
	129977	COUPLING 3/8 IN.	2	
12	135781	FITTING – ADAPTER	2	
	44209	O-RING – #8 ORB		
	135867	O-RING – #10 ORFS		
13	**135778**	**FITTING – ADAPTER**	**3**	
	50219	O-RING – #6 ORB		
	135865	O-RING – #6 ORFS		
14	243637	LINE – HYDRAULIC, 1 IN. DIA	1	
15	243615	LINE – HYD REEL PRESSURE, 3/4 IN. DIA	1	
16	243632	LINE – HYD DRAPER RETURN, 3/4 IN. DIA	1	
17	206061	LINE – HYD DWA RETURN, 3/4 IN. DIA	1	
18	206060	LINE – HYD DWA PRESSURE, 3/4 IN. DIA	1	
19	209063	LINE – HYDRAULIC, 5/8 IN. DIA	1	
20	207427	LINE – HYDRAULIC, 3/8 IN. DIA	1	
21	203977	LINE – HYDRAULIC, 3/8 IN. DIA	1	
22	203978	LINE – HYDRAULIC, 3/8 IN. DIA	1	
23	208413	HOSE – HYDRAULIC, 5/8 IN. I.D., 800 MM LG	1	
24	135718	CAP – HYD SAE-16 ORFS	1	

172. For service parts, refer to Section *76 Drive Manifold – Service Parts, page 179*.

HEADER DRIVE – MANIFOLD MULTICOUPLER ASSEMBLY

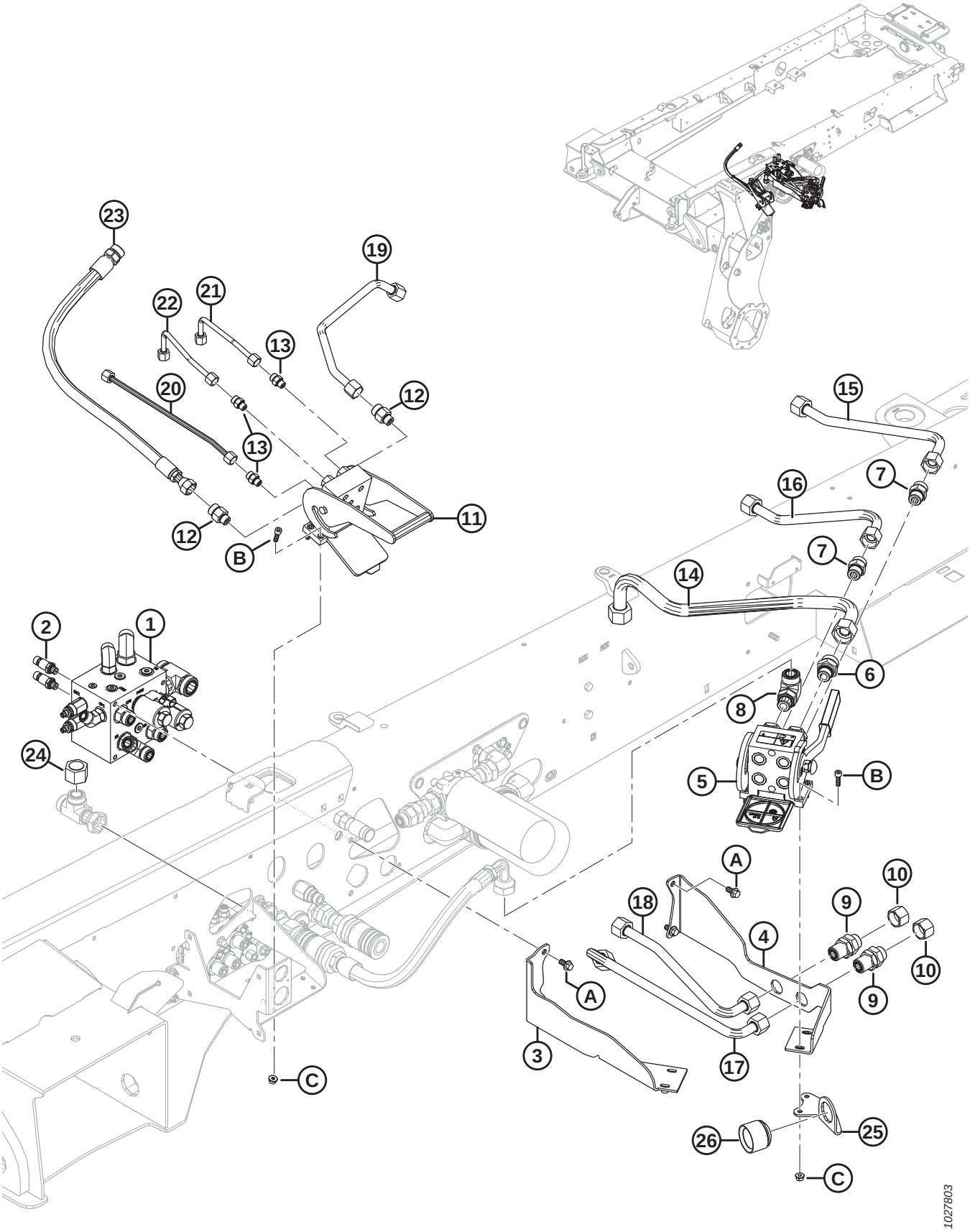

HEADER DRIVE – MANIFOLD MULTICOUPLER ASSEMBLY

Ref	Part Number	Description	Qty	Serial Number
25	253783	BRACKET – COUPLER HOLDER	1	
26	243604	CAP – HARNESS	1	
A	152655	BOLT – HEX FLG HD M10 X 1.5 X 20-8.8-A3L		
B	103523	SCREW – HEX SOC HD TFL M8 X 1.25 X 25-8.8-A2L		
C	135337	NUT – HEX FLG CTR LOC M8 X 1.25-8-A2L		

74 Header Drive – Fitting Manifold Frame Assembly

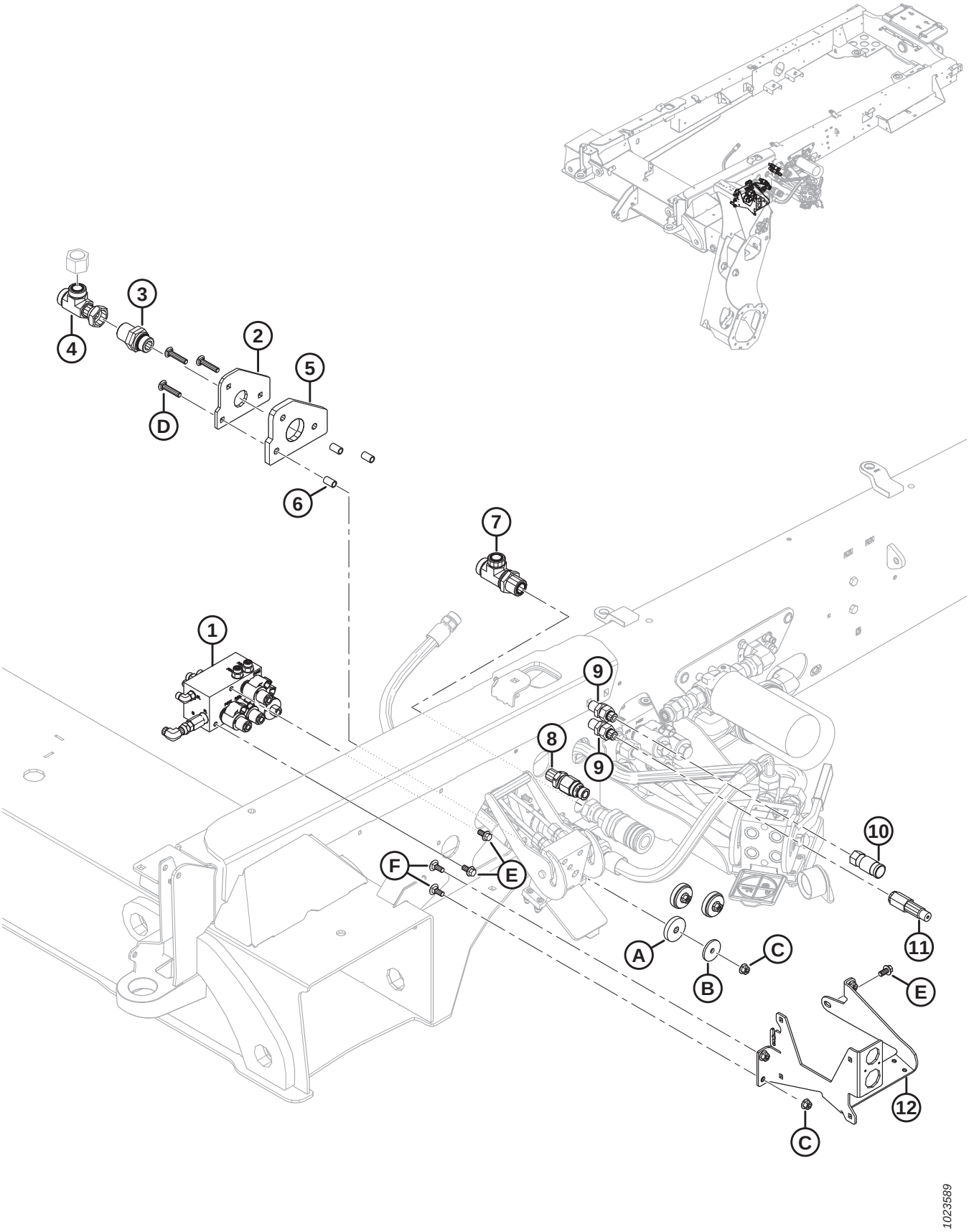

HEADER DRIVE – FITTING MANIFOLD FRAME ASSEMBLY

Ref	Part Number	Description	Qty	Serial Number
1	209950	MANIFOLD – FLOAT SELECTOR [173]	1	
2	208551	PLATE – COUPLER MOUNT	1	
3	136630	FITTING – BULKHEAD UNION	1	
	50220	O-RING – #16 ORB		
	135554	O-RING – #16 ORFS		
4	136508	FITTING – TEE HYD	1	
	135554	O-RING – #16 ORFS		
5	208484	PAD – RUBBER	1	
6	208552	SPACER	3	
7	136510	FITTING – TEE	1	
	135554	O-RING – #16 ORFS		
8	252190	FITTING – COUPLER 1/2 FF MALE BULKHEAD	1	
	135867	O-RING – #10 ORFS		
9	136195	FITTING – UNION HYD	2	
	44209	O-RING – #8 ORB		
	135866	O-RING – #8 ORFS		
10	135312	COUPLER – FEMALE HYD. 3/8 IN. FLAT FACE	1	
11	135386	COUPLER – MALE HYD. 3/8 IN. FLAT FACE (FASTER) [174]	1	
	111978	SEAL KIT – 3/8 MALE (FASTER ONLY)		
12	208542	SUPPORT – MULTICOUPLER BASE	1	
A	208486	WASHER – RUBBER		
B	208487	WASHER – FLAT		
C	135799	NUT – HEX FLG CTR LOC M10 X 1.5-10-A3L		
D	184658	BOLT – RHSSN M10 X 1.5 X 50-8.8-A3L		
E	152655	BOLT – HEX FLG HD M10 X 1.5 X 20-8.8-A3L		
F	135785	BOLT – RHSN M10 X 1.5 X 25-8.8-A3L		

173. For service parts, refer to Section *77 Float Selector Manifold, page 181*.
174. Faster coupler (MD #135386) is interchangeable with Parker Hannifin coupler (NSS). Seal kit (MD #111978) is only intended for Faster coupler and cannot be used with Parker Hannifin coupler. Length can be used to differentiate the two couplers; Faster coupler = 101 mm and Parker Hannifin coupler = 84 mm.

75 Header Drive – Charge Filter Frame Assembly

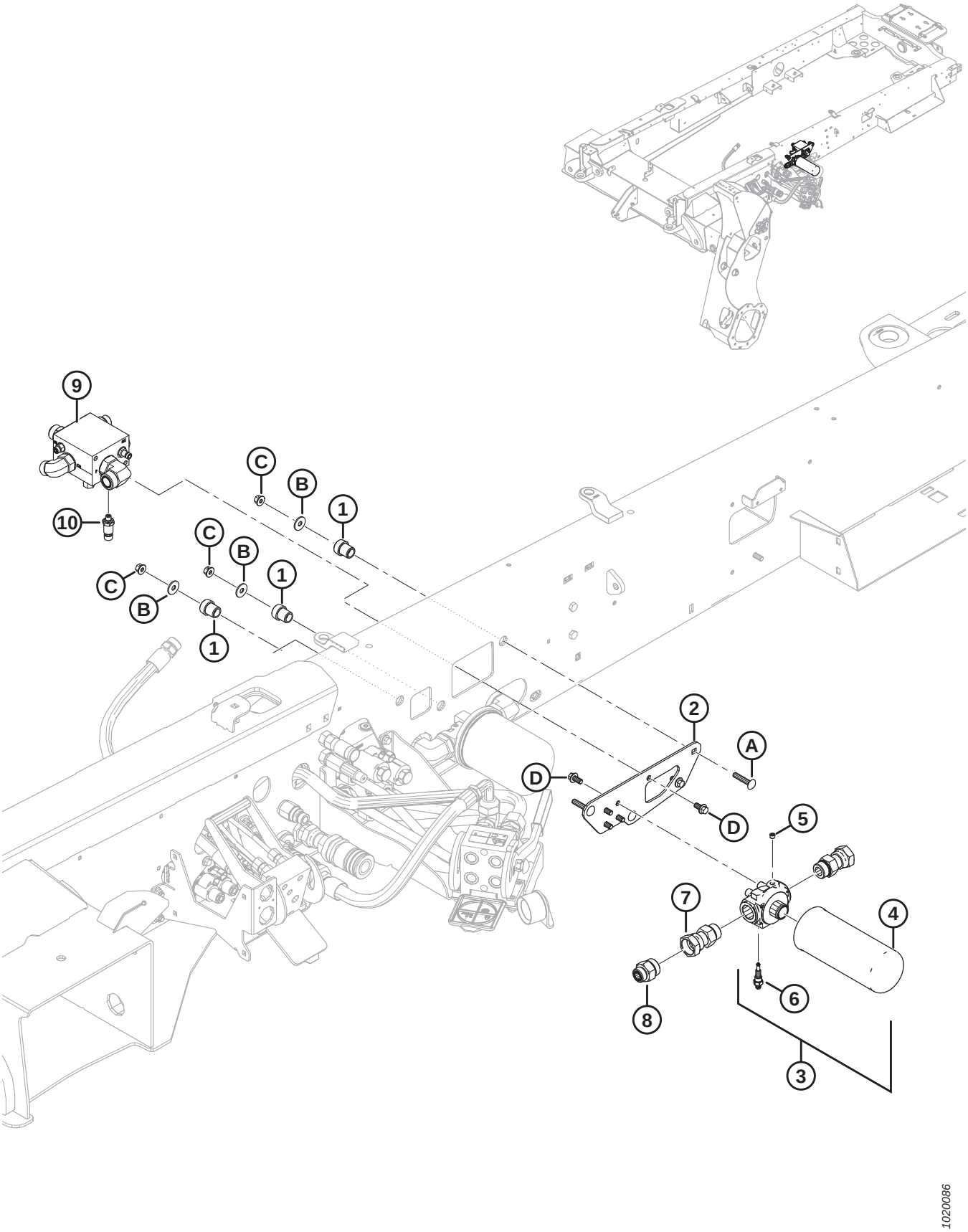

HEADER DRIVE – CHARGE FILTER FRAME ASSEMBLY

Ref	Part Number	Description	Qty	Serial Number
1	30591	INSULATOR – RUBBER	3	
2	207458	PLATE – MOUNT	1	
3	201711	FILTER – HEAD ASSEMBLY [175]	1	
4	201713	ELEMENT – FILTER	1	
5	50230	PLUG – PIPE DRYSEAL 1/8 NPTF	1	
6	139722	SWITCH – SERVICE INDICATOR	1	
7	136362	FITTING – ADAPTER	2	
	50220	O-RING – #16 ORB		
8	136641	FITTING – UNION SAE 16-12 ORFS	1	
	135868	O-RING – #12 ORFS		
	135554	O-RING – #16 ORFS		
9	203340	MANIFOLD – CHARGE [176]	1	
10	207347	SENDER – PRESSURE (PS)	1	
A	184658	BOLT – RHSSN M10 X 1.5 X 50-8.8-A3L		
B	184712	WASHER – FLAT LARGE M10-200HV-A3L		
C	135799	NUT – HEX FLG CTR LOC M10 X 1.5-10-A3L		
D	152655	BOLT – HEX FLG HD M10 X 1.5 X 20-8.8-A3L		

175. Includes filter element (MD #201713), plug (MD #50230), and switch (MD #139722).
176. For service parts, refer to Section *78 Charge Manifold, page 183*.

76 Drive Manifold – Service Parts

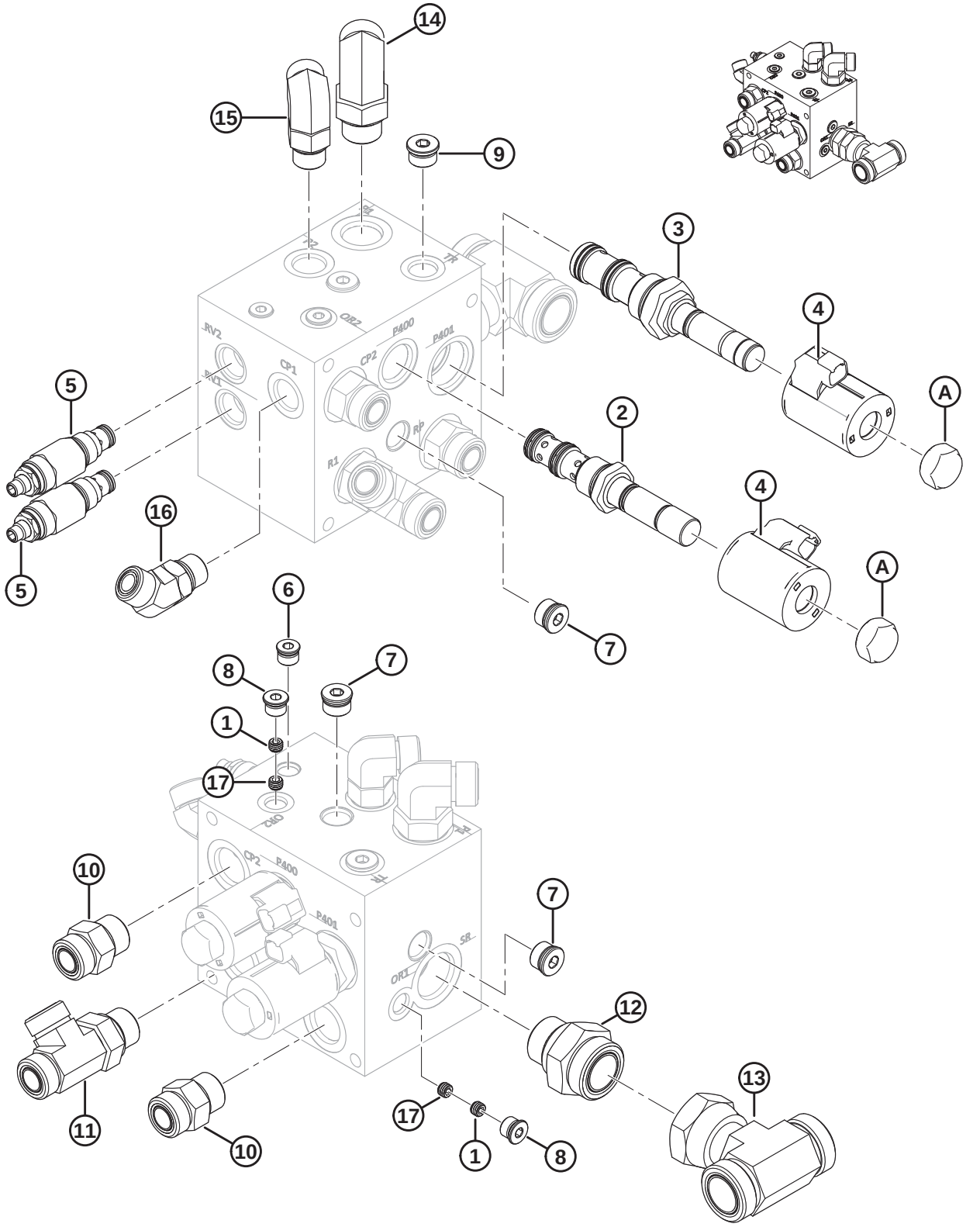

DRIVE MANIFOLD – SERVICE PARTS

Ref	Part Number	Description	Qty	Serial Number
	203337	MANIFOLD – DRIVE [177]		
1	252322	PLUG – ORIFICE (OR1, OR2)	2	
2	291589	VALVE – FLOW CONTROL (P400)	1	
	252355	SEAL KIT		
3	203876	VALVE – FLOW CONTROL (P401)	1	
	252357	SEAL KIT		
4	252318	COIL – SOLENOID	2	
5	252338	VALVE – RELIEF (RV1, RV2)	2	
	220908	SEAL KIT		
6	252325	PLUG – ZERO LEAK	1	
	252347	O-RING – #6 ORB		
7	252327	PLUG – ZERO LEAK	3	
	252348	O-RING – #8 ORB		
8	100577	PLUG – HEX SOCKET C/W O-RING	2	
	50219	O-RING – #6 ORB		
9	158174	PLUG – HEX SOCKET C/W O-RING (TR)	1	
	44209	O-RING – #8 ORB		
10	135788	FITTING – ADAPTER (CP2, RP)	2	
	30971	O-RING – #12 ORB		
	135868	O-RING – #12 ORFS		
11	136257	FITTING – TEE HYD (R1)	1	
	30971	O-RING – #12 ORB		
	135868	O-RING – #12 ORFS		
12	135793	FITTING – ADAPTER (SR)	1	
	50220	O-RING – #16 ORB		
	135869	O-RING – #20 ORFS		
13	136403	FITTING – TEE HYD	1	
	135869	O-RING – #20 ORFS		
14	135821	FITTING – ELBOW 90° HYD (P1)	1	
	30971	O-RING – #12 ORB		
	135868	O-RING – #12 ORFS		
15	136089	FITTING – ELBOW 90° HYD (P2)	1	
	44210	O-RING – #10 ORB		
	135867	O-RING – #10 ORFS		
16	136327	FITTING – ELBOW 45° HYD (CP1)	1	
	44210	O-RING – #10 ORB		
	135867	O-RING – #10 ORFS		
17	320326	RESTRICTOR – PLUG, C/W WIRE (OR1, OR2)	2	
A	252363	NUT – COIL		

177. For location, refer to Section *73 Header Drive – Manifold Multicoupler Assembly, page 171*.

77 Float Selector Manifold

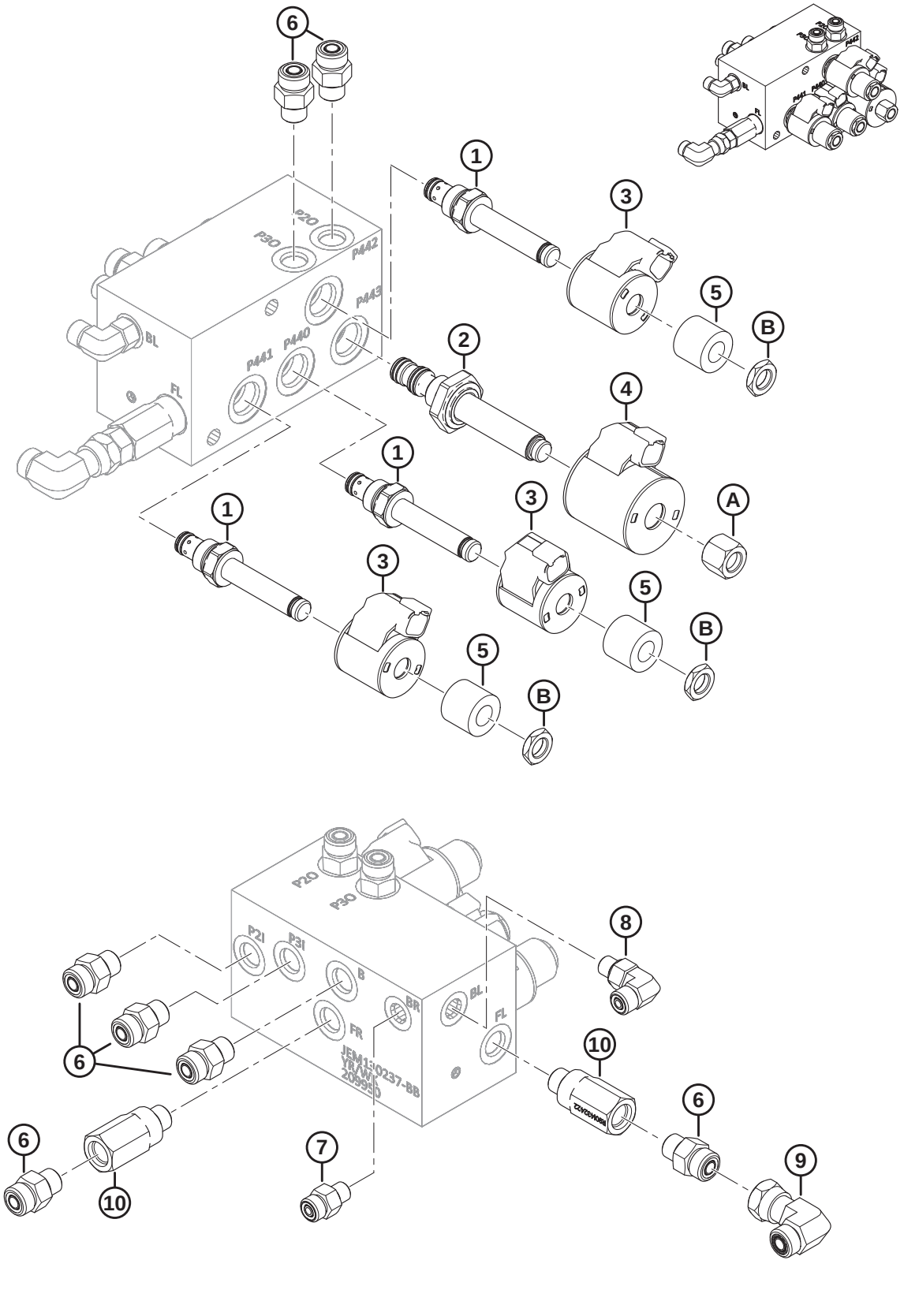

FLOAT SELECTOR MANIFOLD

Ref	Part Number	Description	Qty	Serial Number
	209950	MANIFOLD – FLOAT SELECTOR [178]		
1	252339	VALVE – DIRECTIONAL (P440, P441, P442)	3	
	129711	SEAL KIT		
2	252343	VALVE – DIRECTIONAL (P443)	1	
	252350	SEAL KIT		
3	252319	COIL – SOLENOID	3	
4	209045	COIL – SOLENOID	1	
5	252359	SPACER – COIL	3	
6	135778	FITTING – ADAPTER (P20, P21, P30, P31, B)	7	
	50219	O-RING – #6 ORB		
	135865	O-RING – #6 ORFS		
7	135775	FITTING – ADAPTER (BR)	1	
	50223	O-RING – #4 ORB		
	135957	O-RING – #4 ORFS		
8	136447	FITTING – ELBOW 90° HYD (BL)	1	
	50223	O-RING – #4 ORB		
	135957	O-RING – #4 ORFS		
9	136095	FITTING – ELBOW 90° HYD	1	
	50219	O-RING – #6 ORB		
	135865	O-RING – #6 ORFS		
10	209951	RESTRICTOR – FLOW (FR, FL)	2	
	50219	O-RING – #6 ORB		
A	252361	NUT – COIL		
B	252360	NUT – COIL		

178. For location, refer to Section *74 Header Drive – Fitting Manifold Frame Assembly, page 175*.

78 Charge Manifold

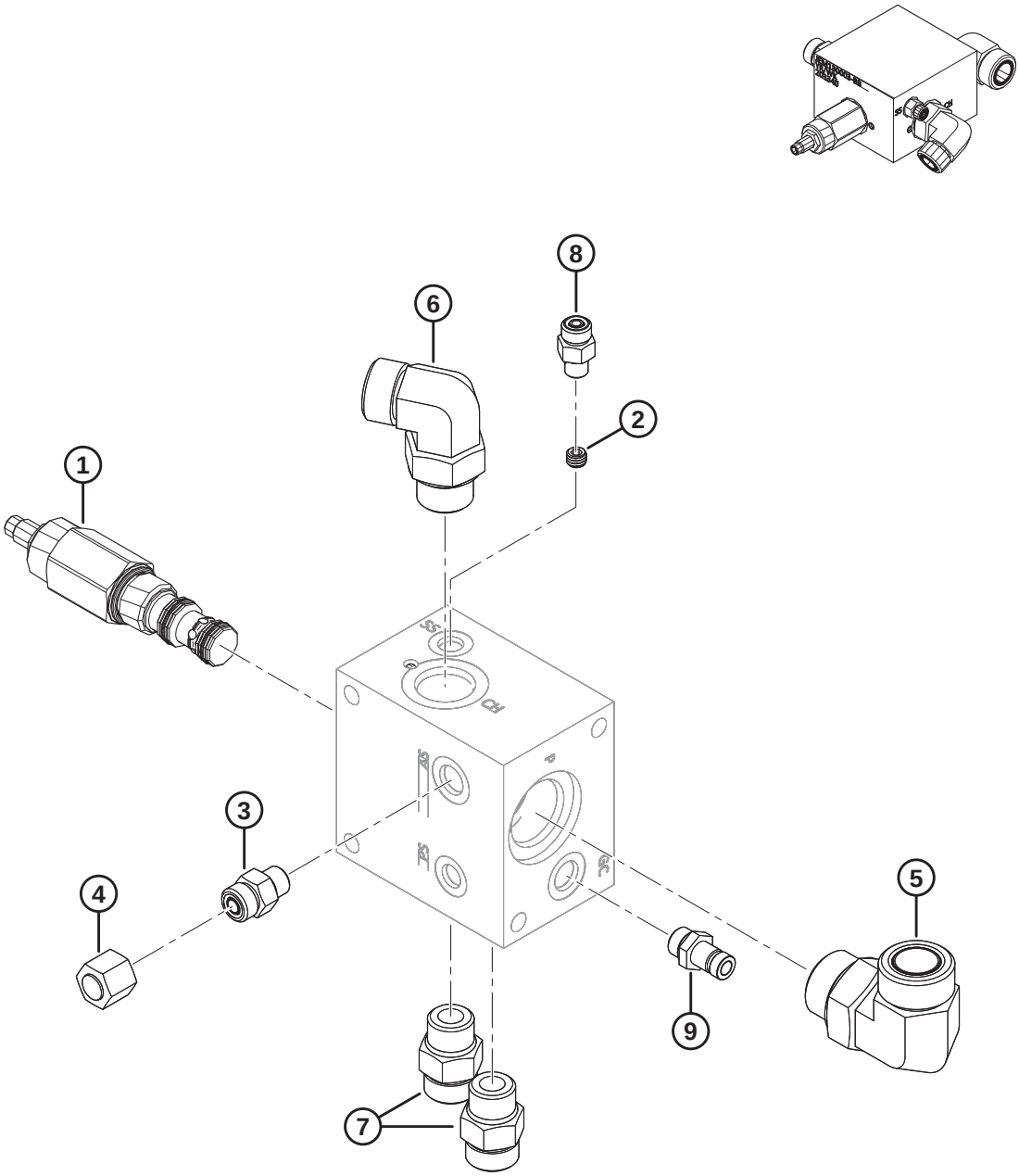

CHARGE MANIFOLD

Ref	Part Number	Description	Qty	Serial Number
	203340	MANIFOLD – CHARGE [179]		
1	309058	VALVE – DIRECTIONAL	1	
	252356	SEAL KIT		
2	252323	PLUG – ORIFICE (SS)	1	
3	135778	FITTING – ADAPTER (AS)	1	
	50219	O-RING – #6 ORB		
	135865	O-RING – #6 ORFS		
4	136325	CAP – HYD SAE-6 ORFS	1	
5	135734	FITTING – ELBOW 90° HYD (P)	1	
	50220	O-RING – #16 ORB		
	135554	O-RING – #16 ORFS		
6	135821	FITTING – ELBOW 90° HYD (CH)	1	
	30971	O-RING – #12 ORB		
	135868	O-RING – #12 ORFS		
7	184461	FITTING – ADAPTER 10 MORFS X 10 MORB (C1, C2)	2	
	44210	O-RING – #10 ORB		
	135867	O-RING – #10 ORFS		
8	135775	FITTING – ADAPTER	1	
	44210	O-RING – #10 ORB		
	135867	O-RING – #10 ORFS		
9	135587	NIPPLE – HYDRAULIC (GC)	1	
	50219	O-RING – #6 ORB		

179. For location, refer to Section *75 Header Drive – Charge Filter Frame Assembly, page 177*.

79 Hydraulics – Tank Fittings

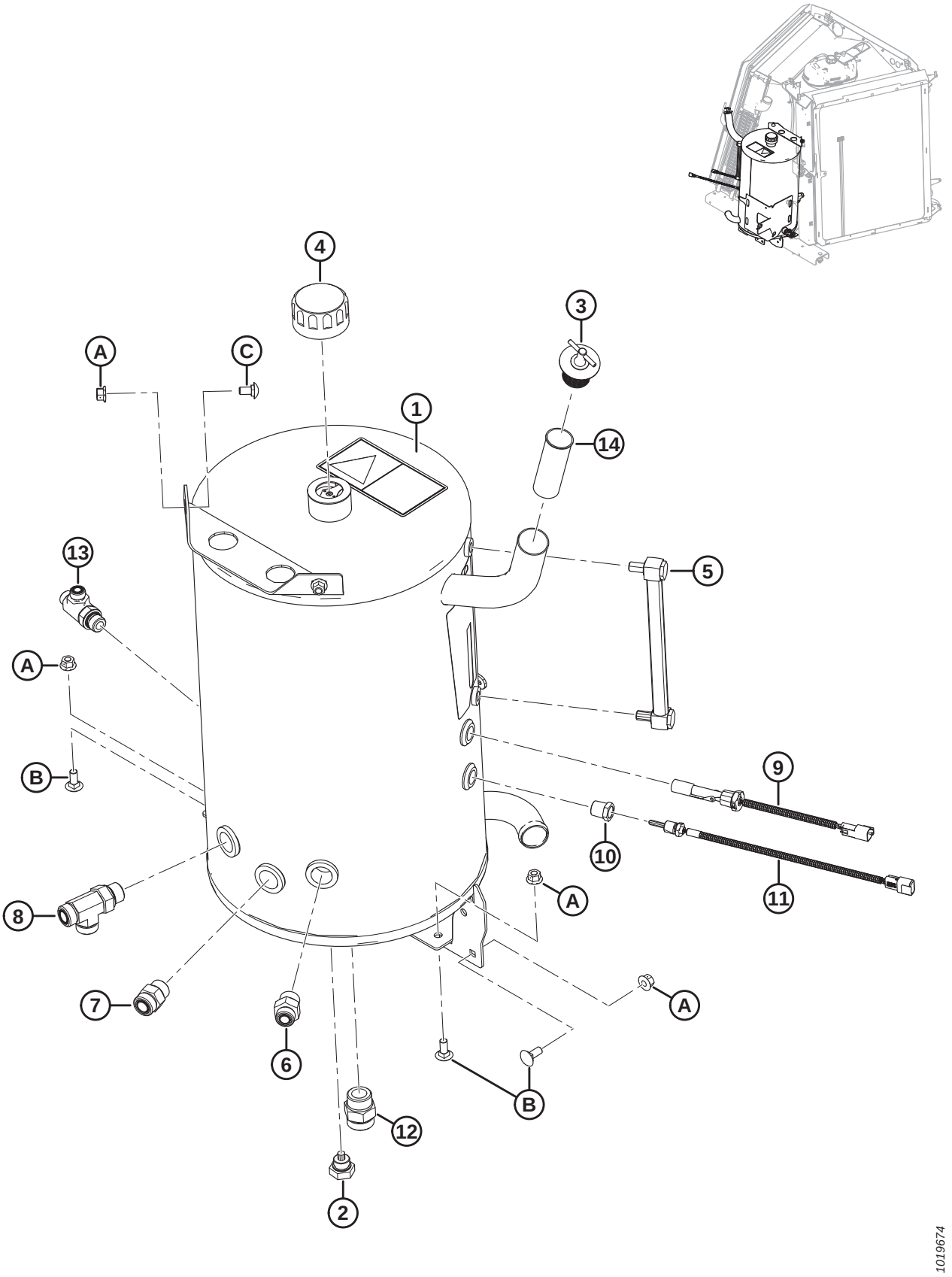

HYDRAULICS – TANK FITTINGS

Ref	Part Number	Description	Qty	Serial Number
1	202646	TANK – HYDRAULIC OIL [180]	1	
2	111975	PLUG – 0.875-14 MAGNETIC HEX HEAD	1	
3	208276	PLUG – EXPANDING RUBBER	1	
4	208277	CAP – BREATHER	1	
5	208278	GAUGE – LEVEL	1	
6	135786	FITTING – ADAPTER	1	
	30971	O-RING – #12 ORB		
	135867	O-RING – #10 ORFS		
7	135788	FITTING – ADAPTER	1	
	30971	O-RING – #12 ORB		
	135868	O-RING – #12 ORFS		
8	136257	FITTING – TEE HYD	1	
	30971	O-RING – #12 ORB		
	135868	O-RING – #12 ORFS		
9	138473	SWITCH – OIL LEVEL, ZINC BODY	1	
10	21980	FITTING – REDUCER BUSHING	1	
11	183905	SENSOR – OIL TEMP	1	
12	135791	FITTING – ADAPTER	1	
	50220	O-RING – #16 ORB		
	135554	O-RING – #16 ORFS		
13	136282	FITTING – TEE HYD	1	
	44210	O-RING – #10 ORB		
	135866	O-RING – #8 ORFS		
14	209812	FILTER – FILL TUBE	1	
A	135799	NUT – HEX FLG CTR LOC M10 X 1.5-10-A3L		
B	135785	BOLT – RHSN M10 X 1.5 X 25-8.8-A3L		
C	184657	BOLT – RHSSN M10 X 1.5 X 20-8.8-A3L		

180. Includes plugs (MD #111975, 208276), breather cap (MD #208277), level gauge (MD #208278), and decals (MD #166832, 207248).

80 Hydraulics – Fan/Lift Manifold (Accumulator Replace)

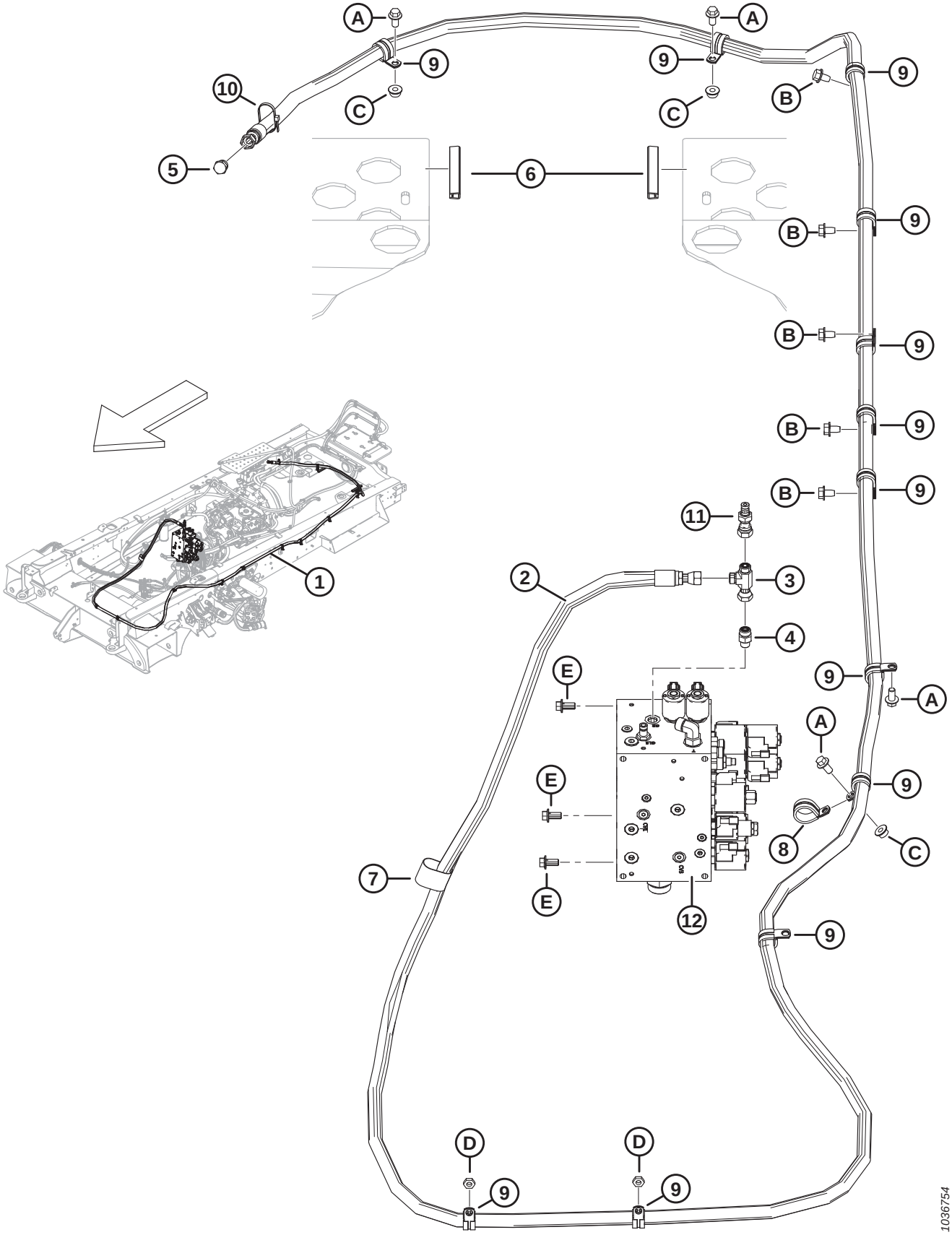

HYDRAULICS – FAN/LIFT MANIFOLD (ACCUMULATOR REPLACE)

Ref	Part Number	Description	Qty	Serial Number
1	306252	KIT – ACCUMULATOR DELETE [181]		
2	306248	HOSE – HYDRAULIC	1	
3	136097	FITTING – TEE HYDRAULIC	1	
	135865	O-RING – Ø1.78 X Ø9.25		
4	320126	FITTING – ADAPTER .078 ORIFICE (GP)	1	
5	136326	PLUG – HYD SAE - 6 ORFS	1	
6	176334	SEAL – EDGE TRIM	2	
7	135443	CINCH STRAP 4 IN. LG	1	
8	209032	CLAMP – P-CLIP, INSULATED, 1 IN.	1	
9	209018	CLAMP – INSULATED 7/8 IN.	12	
10	21763	FASTENER – CABLE TIE, BLACK, 160 MM LG	1	
11	252662	FITTING – NIPPLE HYDRAULIC	1	
12	202075	MANIFOLD – LIFT FAN [182]	1	
A	152655	BOLT – HEX FLG HD M10 X 1.5 X 20-8.8-AA1J		
B	136574	SCREW – HEX WASHER HD M10 X 1.5 X 16-450HV-AF0C		
C	135927	NUT – HEX FLG M10 X 1.5-8-AA1J		
D	136442	NUT – HEX THIN M10 X 1.5-05-AA1J		
E	152655	BOLT – HEX FLG HD M10 X 1.5 X 20-8.8-A3L		

181. Kit includes #2–10, hardware A–D, and installation instructions. Kit intended to replace accumulator that is experiencing recurring reliability and lifespan issues. The Accumulator Delete kit (MD #306252) provides all the necessary parts to replace the fan/lift manifold accumulator with a hydraulic hose and plug.
182. For service parts, refer to Section *81 Lift/Fan Manifold – Valves and Coils, page 189*, and Section *82 Lift/Fan Manifold – Plugs and Fittings, page 191*.

81 Lift/Fan Manifold – Valves and Coils

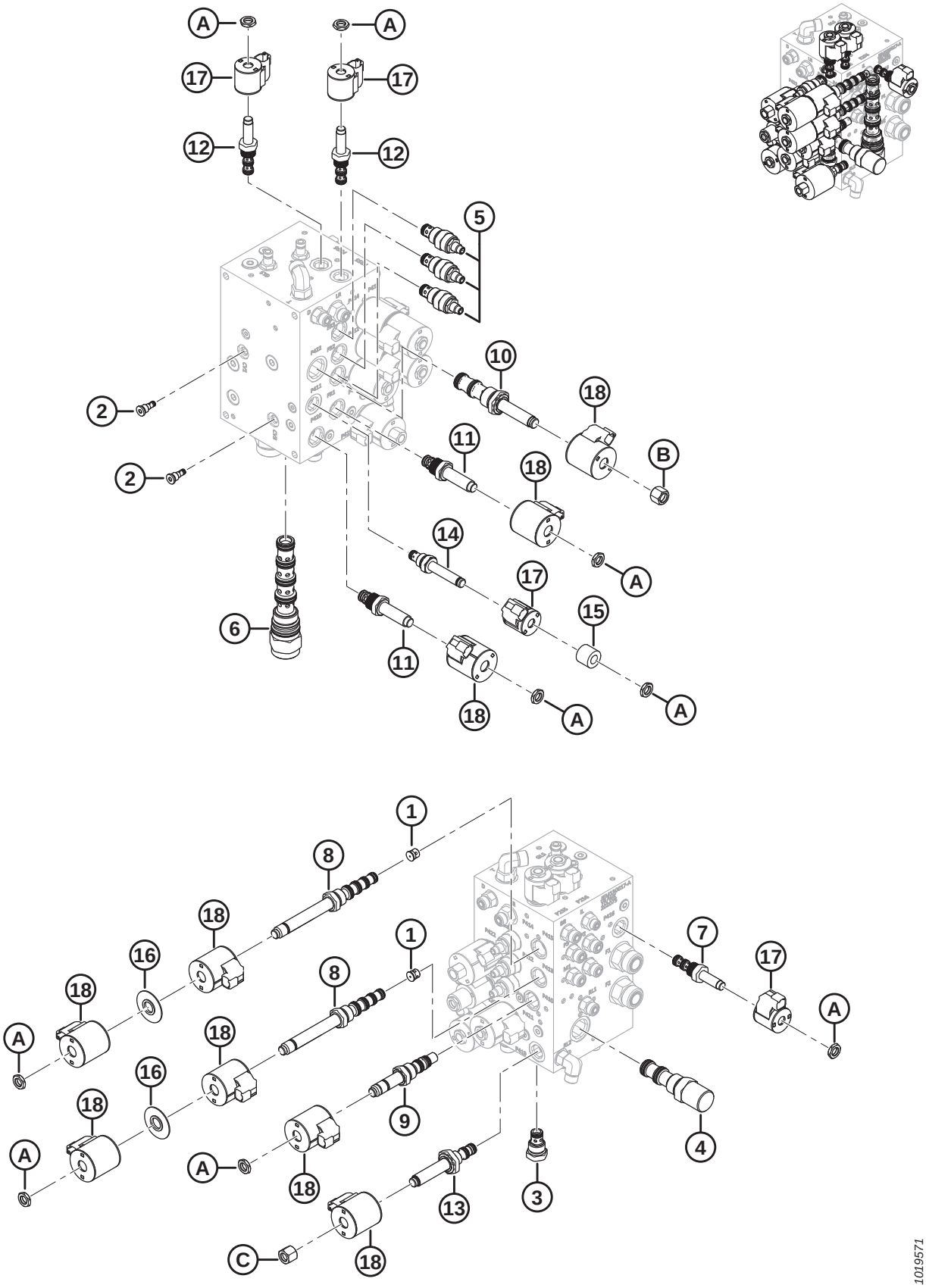

LIFT/FAN MANIFOLD – VALVES AND COILS

Ref	Part Number	Description	Qty	Serial Number
	202075	MANIFOLD – LIFT FAN [183]		
1	252333	VALVE – CHECK (P413, P415)	2	
2	252331	VALVE – CHECK (CV1, CV3)	2	
	252349	SEAL KIT		
3	252332	VALVE – CHECK (CV2)	1	
	220908	SEAL KIT		
4	252334	VALVE – PRESSURE COMPENSATOR (EC)	1	
	252355	SEAL KIT		
5	252336	VALVE – FLOW REGULATOR (FR1, FR2, FR3)	3	
	133820	SEAL KIT		
6	252337	VALVE – DIRECTIONAL (PD)	1	
	252358	SEAL KIT		
7	252340	VALVE – DIRECTIONAL (P416)	1	
	252350	SEAL KIT		
8	252342	VALVE – DIRECTIONAL	2	
	252353	SEAL KIT		
9	252344	VALVE – DIRECTIONAL (P410)	1	
	252352	SEAL KIT		
10	252345	VALVE – PRESSURE CONTROL (P422)	1	
	252354	SEAL KIT		
11	209044	VALVE – FLOW CONTROL (P420, P421)	2	
	220908	SEAL KIT		
12	252341	VALVE – DIRECTIONAL (P255, P256)	2	
	252350	SEAL KIT		
13	252343	VALVE – DIRECTIONAL (P419)	1	
	252350	SEAL KIT		
14	252339	VALVE – DIRECTIONAL (P411)	1	
	129711	SEAL KIT		
15	252320	SPACER – COIL	1	
16	252321	SPACER – COIL	2	
17	252319	COIL – SOLENOID	4	
18	209045	COIL – SOLENOID	9	
A	252360	NUT – COIL		
B	252364	NUT – COIL		
C	252361	NUT – COIL		

183. Refer to Section *80 Hydraulics – Fan/Lift Manifold (Accumulator Replace), page 187*.

82 Lift/Fan Manifold – Plugs and Fittings

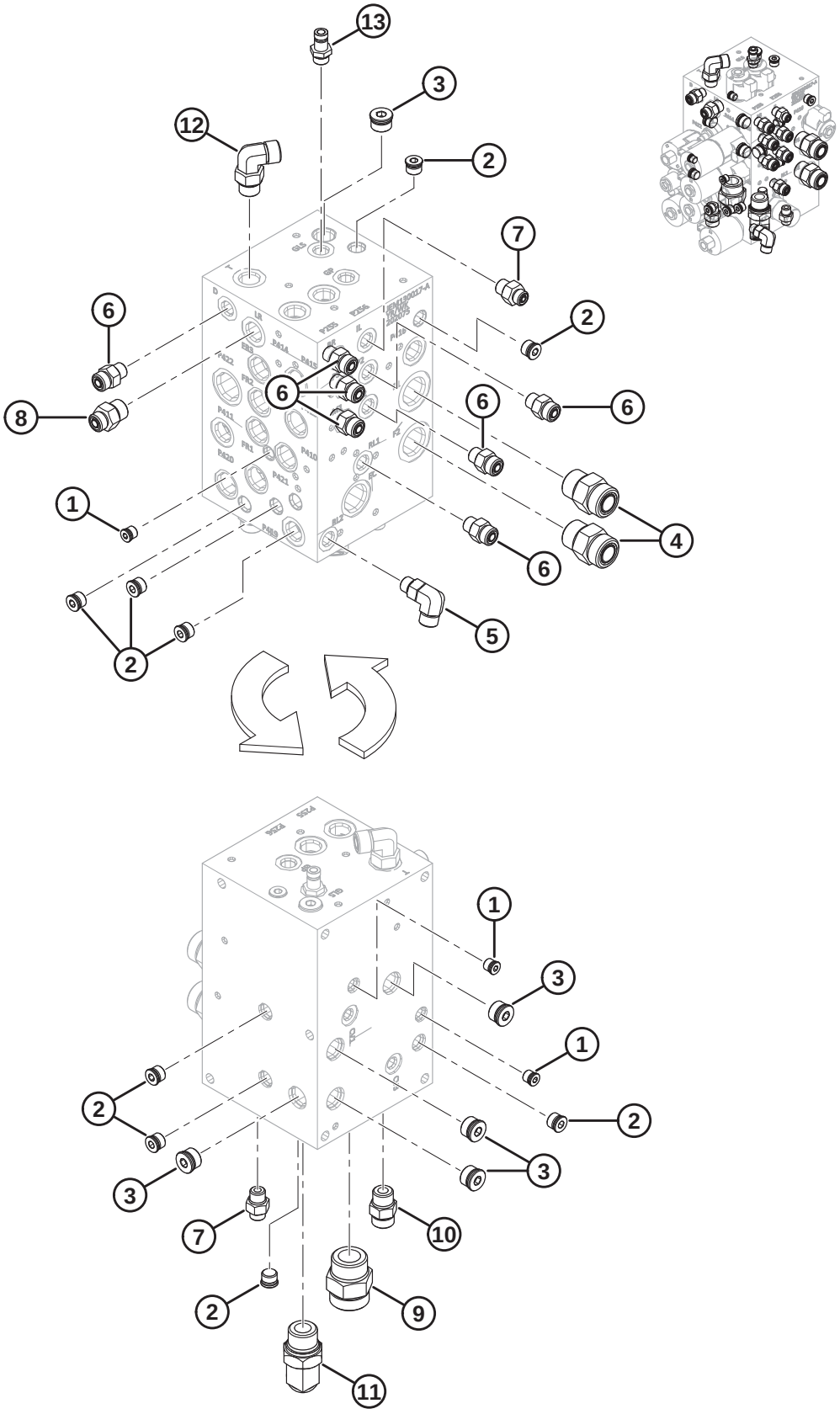

LIFT/FAN MANIFOLD – PLUGS AND FITTINGS

NOTE:

Valves and coils removed from illustration for clarity. Refer to Section *81 Lift/Fan Manifold – Valves and Coils, page 189*.

Ref	Part Number	Description	Qty	Serial Number
	202075	MANIFOLD – LIFT FAN [184]		
1	252324	PLUG – ZERO LEAK	3	
2	252325	PLUG – ZERO LEAK	9	
	252347	O-RING – #6 ORB		
3	252327	PLUG – ZERO LEAK	5	
	252348	O-RING – #8 ORB		
4	135788	FITTING – ADAPTER (F1, F2)	2	
	30971	O-RING – #12 ORB		
	135868	O-RING – #12 ORFS		
5	136095	FITTING – ELBOW 90° HYD (RL2)	1	
	50219	O-RING – #6 ORB		
	135865	O-RING – #6 ORFS		
6	135778	FITTING – ADAPTER (BR, P2, P3, M1, M2, RL1, D)	7	
	50219	O-RING – #6 ORB		
	135865	O-RING – #6 ORFS		
7	135776	FITTING – ADAPTER (IL, LS)	2	
	50219	O-RING – #6 ORB		
	135957	O-RING – #4 ORFS		
8	191705	FITTING – ADAPTER 6 MORFS X 8 MORB (LR)	1	
	44209	O-RING – #8 ORB		
	135865	O-RING – #6 ORFS		
9	135791	FITTING – ADAPTER (T1)	1	
	50220	O-RING – #16 ORB		
	135554	O-RING – #16 ORFS		
10	135780	FITTING – ADAPTER (H)	1	
	44209	O-RING – #8 ORB		
	135866	O-RING – #8 ORFS		
11	136418	FITTING – ELBOW 45° HYD (P)	1	
	30971	O-RING – #12 ORB		
	135868	O-RING – #12 ORFS		
12	136220	FITTING – ELBOW 90° HYD (T)	1	
	30971	O-RING – #12 ORB		
	135868	O-RING – #12 ORFS		
13	135587	NIPPLE – HYDRAULIC (GLS)	1	
	50219	O-RING – #6 ORB		

184. Refer to Section *80 Hydraulics – Fan/Lift Manifold (Accumulator Replace), page 187*.

83 Hydraulics – Fan Drive Lines

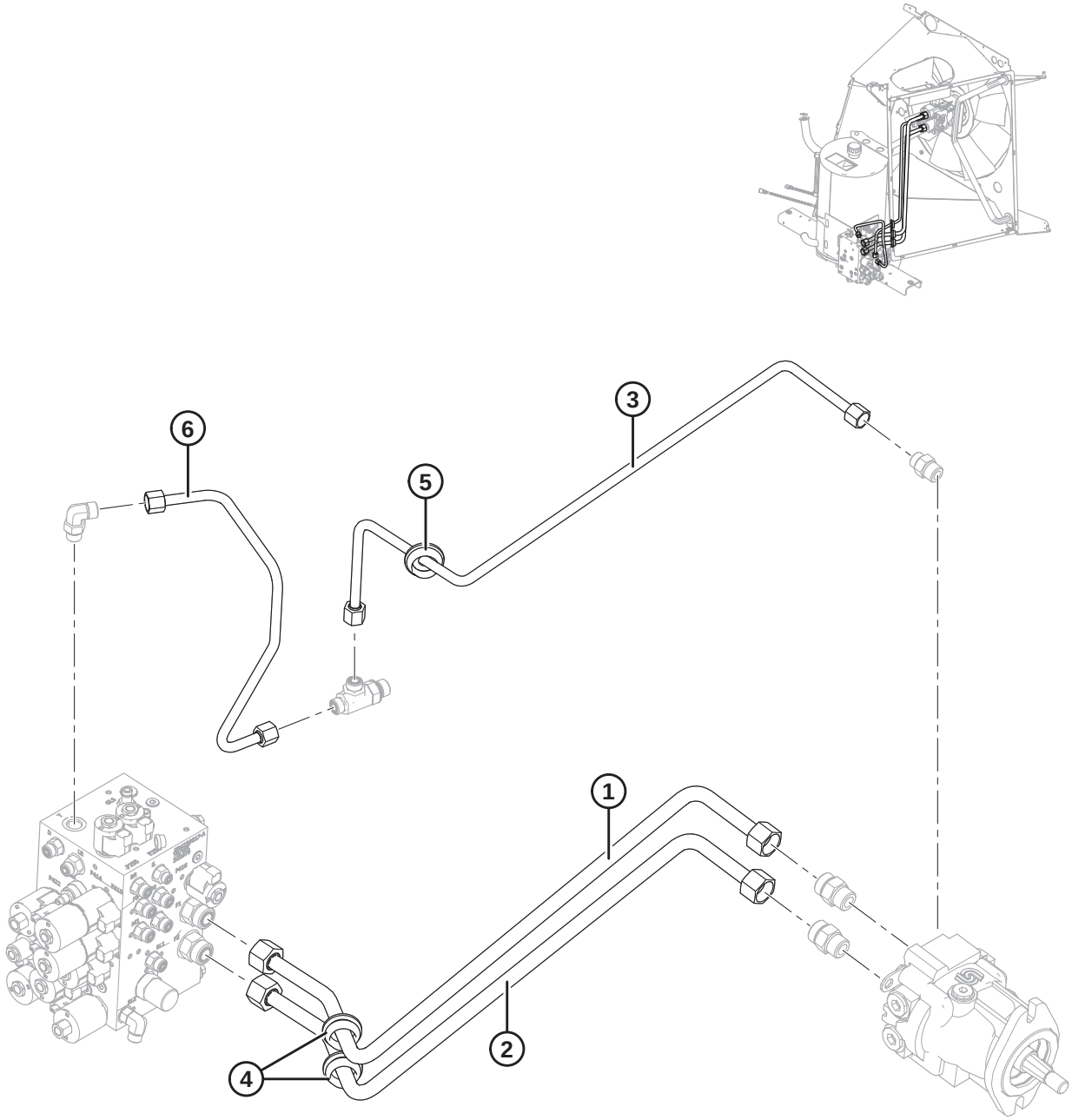

1015697

HYDRAULICS – FAN DRIVE LINES

Ref	Part Number	Description	Qty	Serial Number
1	201738	LINE – HYDRAULIC, 3/4 IN DIA	1	
2	201739	LINE – HYDRAULIC, 3/4 IN DIA	1	
3	201759	LINE – HYDRAULIC, 1/2 IN DIA	1	
4	45155	GROMMET – 0.75 IN I.D.	2	
5	42080	GROMMET – RUBBER	1	
6	205036	LINE – HYDRAULIC, 1/2 IN DIA	1	

84 Hydraulics – Oil Cooler Lines

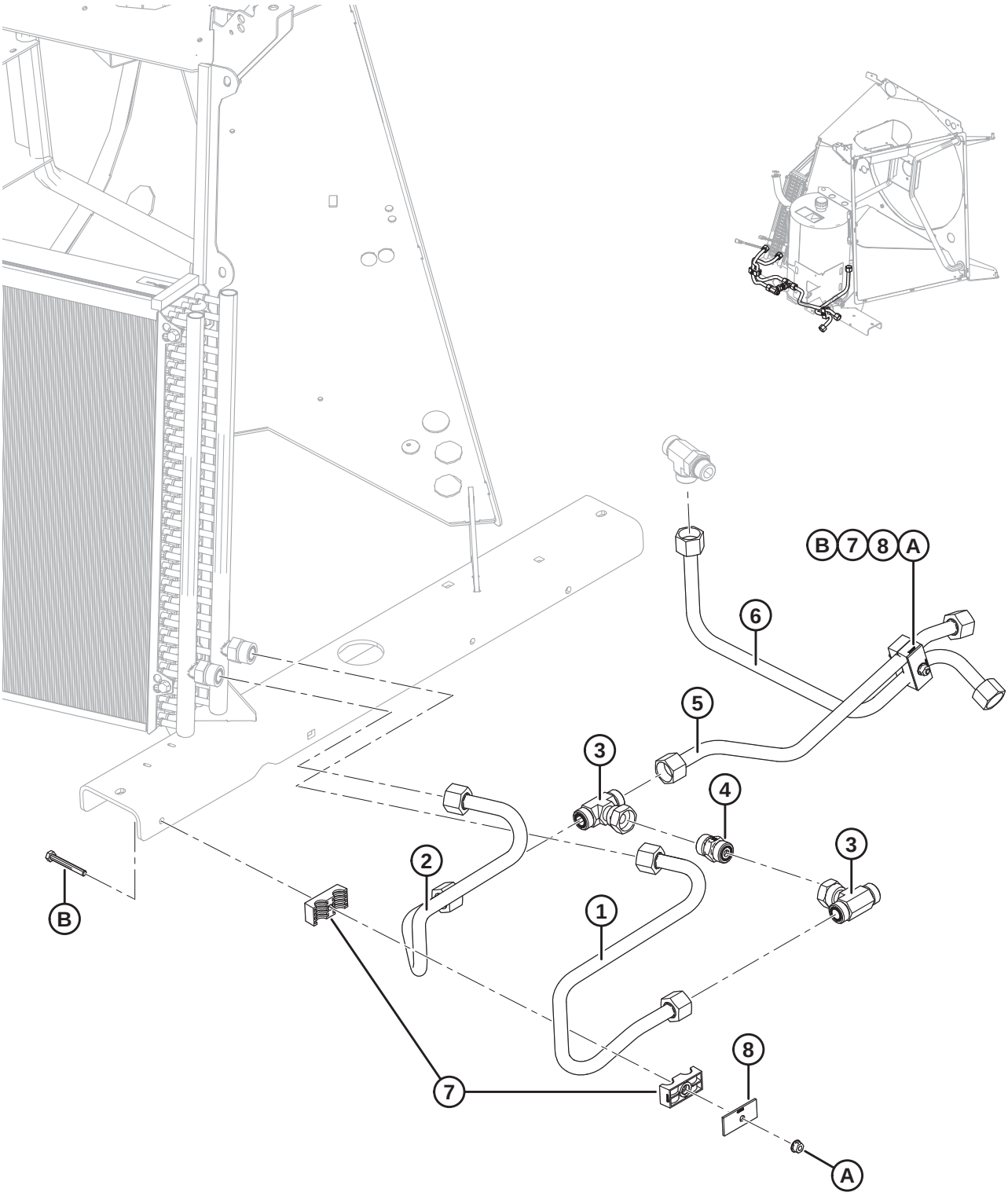

1015699

HYDRAULICS – OIL COOLER LINES

Ref	Part Number	Description	Qty	Serial Number
1	206850	LINE – HYDRAULIC, 3/4 IN DIA	1	
2	206878	LINE – HYDRAULIC, 3/4 IN DIA	1	
3	136256	FITTING – TEE HYD	2	
	135868	O-RING – #12 ORFS		
4	204847	VALVE – CHECK	1	
	135868	O-RING – #12 ORFS		
5	202714	LINE – HYDRAULIC, 3/4 IN DIA	1	
6	208411	LINE – HYDRAULIC, 3/4 IN DIA	1	
7	202991	CLAMP – TUBING	2	
8	232233	CLAMP – COVER PLATE	2	
A	135337	NUT – HEX FLG CTR LOC M8 X 1.25-8-A2L		
B	152775	BOLT – HEX HD M8 X 1.25 X 65-8.8-A2L		

85 Hydraulics – Frame Fittings

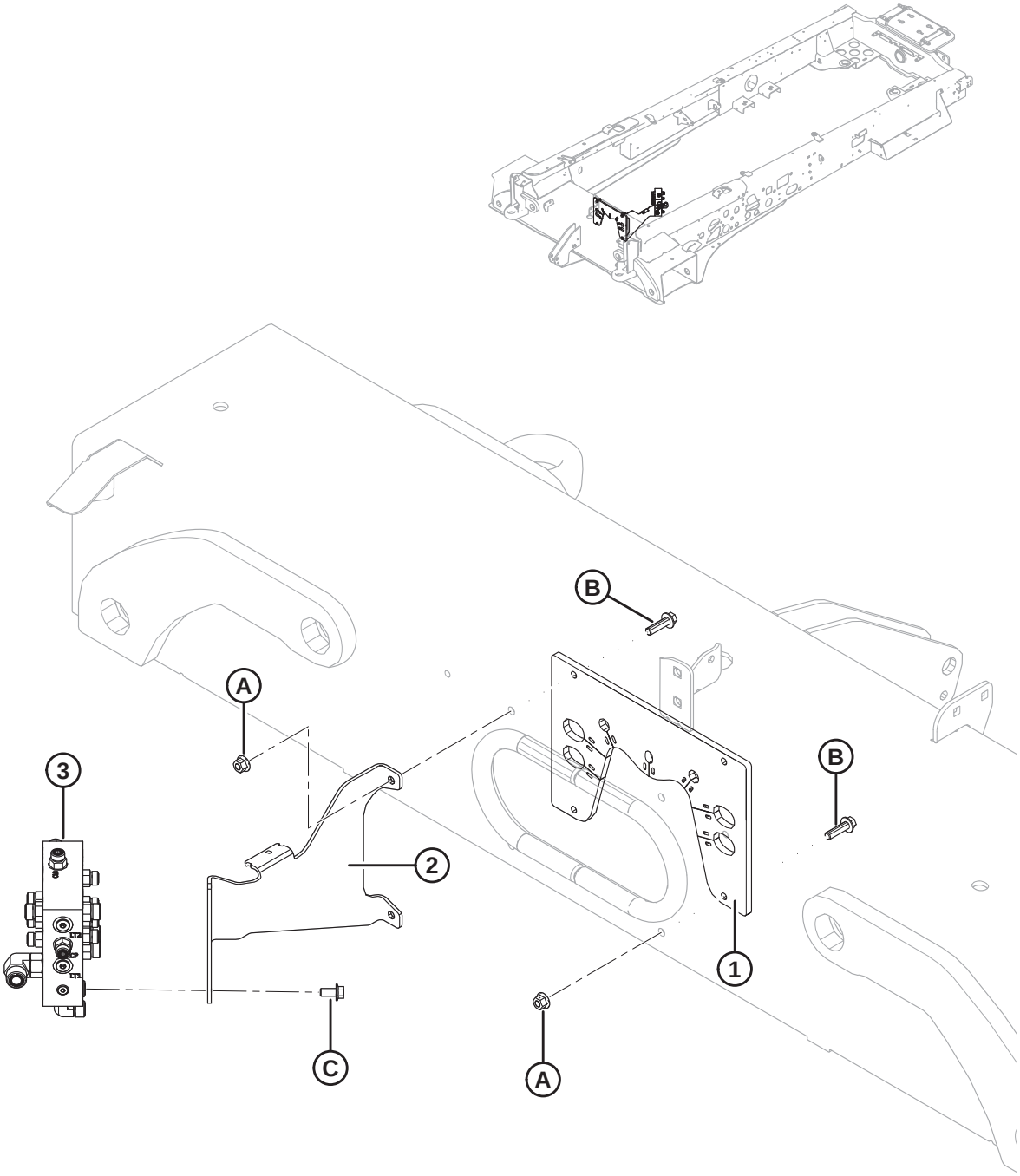

HYDRAULICS – FRAME FITTINGS

Ref	Part Number	Description	Qty	Serial Number
1	203150	STRAP – LINE SUPPORT	1	
2	203940	SUPPORT – LINE	1	
3	306166	MANIFOLD – JUNCTION [185]	1	
A	135799	NUT – HEX FLG CTR LOC M10 X 1.5-10-A3L		
B	152947	BOLT – HEX FLG HD TFL M10 X 1.5 X 40-10.9-AA1J		
C	152655	BOLT – HEX FLG HD M10 X 1.5 X 20-8.8-A3L		

185. For service parts, refer to Section *86 Junction Manifold – Service Parts, page 199*.

86 Junction Manifold – Service Parts

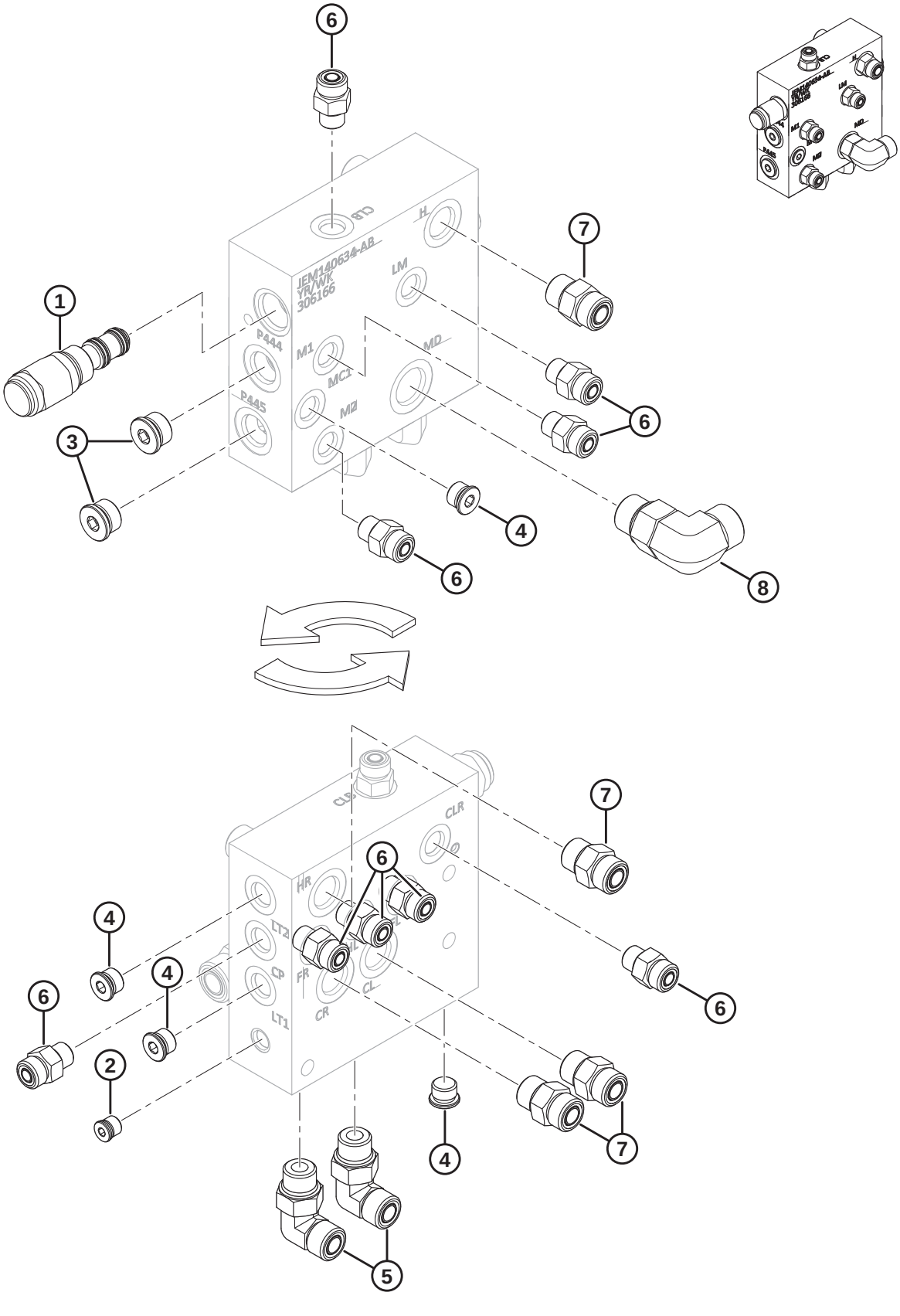

JUNCTION MANIFOLD – SERVICE PARTS

Ref	Part Number	Description	Qty	Serial Number
	306166	MANIFOLD – JUNCTION [186]		
1	252330	VALVE – CONTROL (CB)	1	
	252352	SEAL KIT		
2	252324	PLUG – ZERO LEAK	1	
3	158174	PLUG – HEX SOCKET C/W O-RING (P444, P445)	2	
	44209	O-RING – #8 ORB		
4	100577	PLUG – HEX SOCKET C/W O-RING (MC1, MC2, LT1, LT2,)	4	
	50219	O-RING – #6 ORB		
5	136220	FITTING – ELBOW 90° HYD (MDL, MDR)	2	
	44209	O-RING – #8 ORB		
	135866	O-RING – #8 ORFS		
6	135778	FITTING – ADAPTER (CLB, M1, M2, LM, HR, HL, FL, CLR, LT2)	9	
	50219	O-RING – #6 ORB		
	135865	O-RING – #6 ORFS		
7	135780	FITTING – ADAPTER (H, HR, CR, CL)	4	
	44209	O-RING – #8 ORB		
	135866	O-RING – #8 ORFS		
8	136089	FITTING – ELBOW 90° HYD (MD)	1	
	44210	O-RING – #10 ORB		
	135867	O-RING – #10 ORFS		

186. Refer to Section *85 Hydraulics – Frame Fittings, page 197*.

87 Hydraulics – Charge Lines, Salami Gear Pump (2019 and Prior)

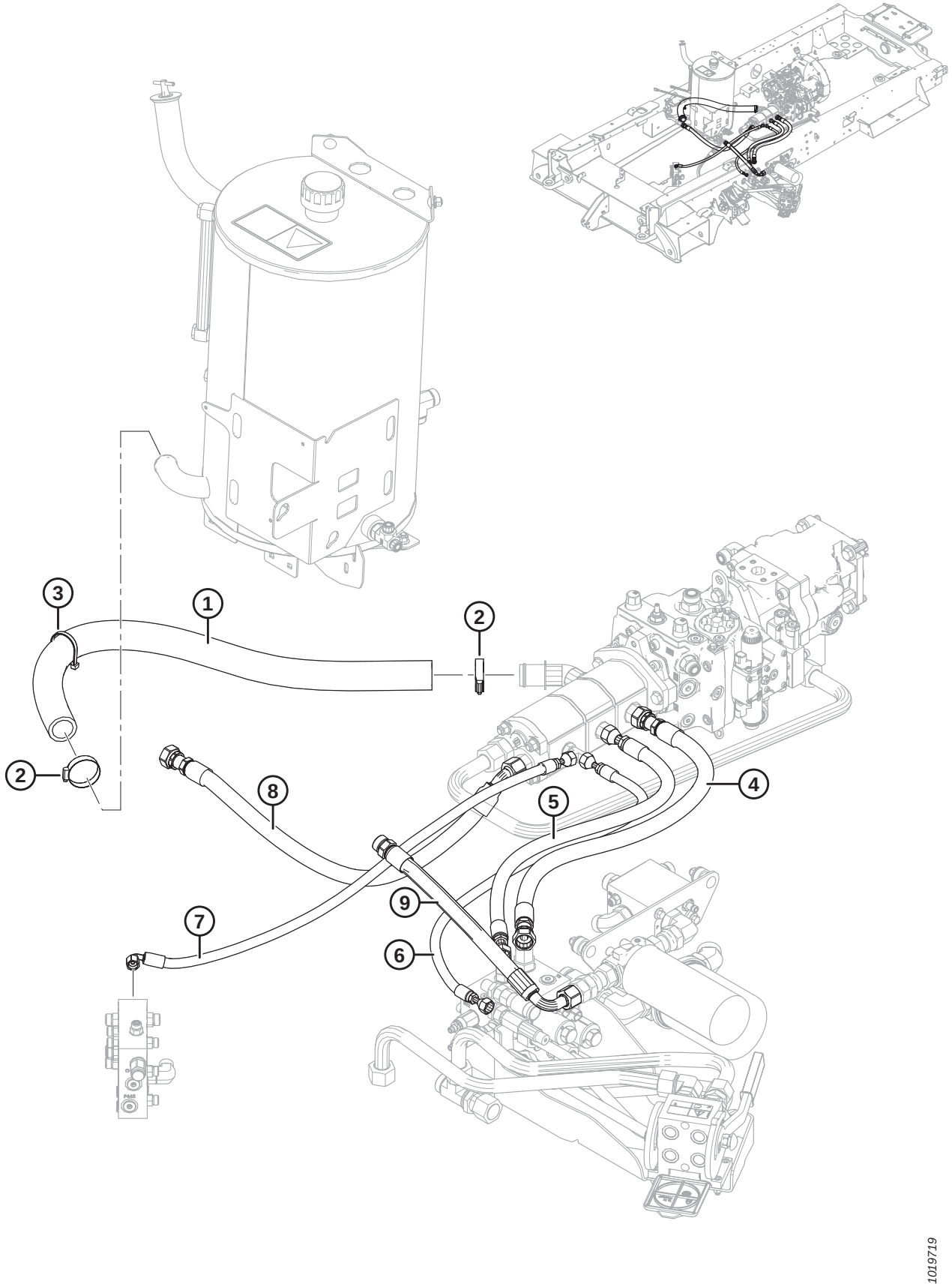

NOTE:

All parts listed in this topic are used to service charge lines on windrowers with a Salami-made gear pump (Aluminum). Windrowers with serial numbers 378278 and later have a Turolla-made gear pump (black). For windrowers with a Turolla gear pump, refer to Section *88 Hydraulics – Charge Lines, Turolla Gear Pump (2020 and Later), page 203*.

Ref	Part Number	Description	Qty	Serial Number
1	201732	HOSE – HYDRAULIC, 1.5 IN I.D., 1030 MM LG	1	–378277
2	135725	CLAMP – HOSE GEAR TYPE	2	–378277
3	30753	FASTENER – CABLE TIE, BLACK, 305 MM LG	1	–378277
4	201763	HOSE – HYDRAULIC, 3/4 IN I.D., 860 MM LG	1	–378277
5	201762	HOSE – HYDRAULIC, 5/8 IN I.D., 840 MM LG	1	–378277
6	205317	HOSE – HYDRAULIC, 3/8 IN I.D., 940 MM LG	1	–378277
7	206728	HOSE – HYDRAULIC, 3/8 IN I.D., 1000 MM LG	1	–378277
8	206569	HOSE – HYDRAULIC, 3/4 IN I.D., 850 MM LG	1	–378277
9	205213	HOSE – HYDRAULIC, 3/4 IN I.D., 450 MM LG	1	–378277

88 Hydraulics – Charge Lines, Turolla Gear Pump (2020 and Later)

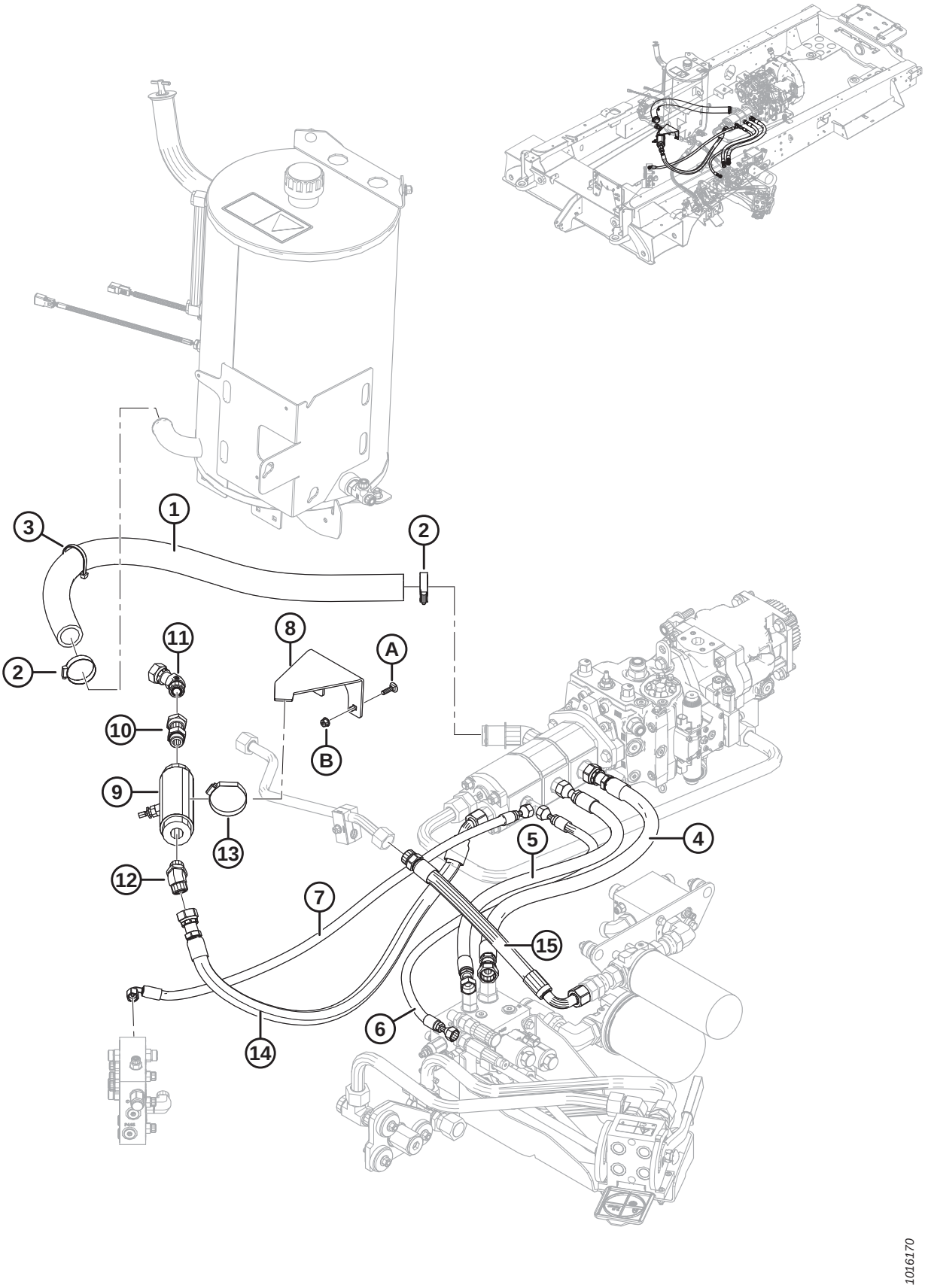

NOTE:

All parts listed in this topic are used to service charge lines on windrowers with a Turolla-made gear pump (black). Windrowers with serial number 378277 and prior have a Salami-made gear pump (Aluminum). For windrowers with a Salami gear pump, refer to Section *87 Hydraulics – Charge Lines, Salami Gear Pump (2019 and Prior), page 201*.

Ref	Part Number	Description	Qty	Serial Number
1	201732	HOSE – HYDRAULIC, 1.5 IN I.D., 1030 MM LG	1	378278–
2	135725	CLAMP – HOSE GEAR TYPE	2	378278–
3	30753	FASTENER – CABLE TIE, BLACK, 305 MM LG	1	378278–
4	201763	HOSE – HYDRAULIC, 3/4 IN I.D., 860 MM LG	1	378278–
5	201762	HOSE – HYDRAULIC, 5/8 IN I.D., 840 MM LG	1	378278–
6	205317	HOSE – HYDRAULIC, 3/8 IN I.D., 940 MM LG	1	378278–
7	206728	HOSE – HYDRAULIC, 3/8 IN I.D., 1000 MM LG	1	378278–
8	209104	SUPPORT – SUPPRESSOR	1	378278–
9	209069	SUPPRESSOR – HYDRAULIC	1	378278–
10	136501	FITTING – ADAPTER HYD	1	378278–
	30971	O-RING – #12 ORB		
11	136809	FITTING – ELBOW 45° HYD	1	378278–
	135868	O-RING – #12 ORFS		
12	136418	FITTING – ELBOW 45° HYD	1	378278–
	30971	O-RING – #12 ORB		
	135868	O-RING – #12 ORFS		
13	21995	CLAMP – HOSE GEAR TYPE	1	378278–
14	209109	HOSE – HYDRAULIC, 3/4 IN. I.D., 1000 MM LG	1	378278–
15	205213	HOSE – HYDRAULIC, 3/4 IN I.D., 450 MM LG	1	378278–
A	190752	BOLT – RHSN M8 X 1.25 X 30-8.8-AA1J		
B	135337	NUT – HEX FLG CTR LK M8 X 1.25-8-AA1J		

89 Hydraulics – Open Drive Lines

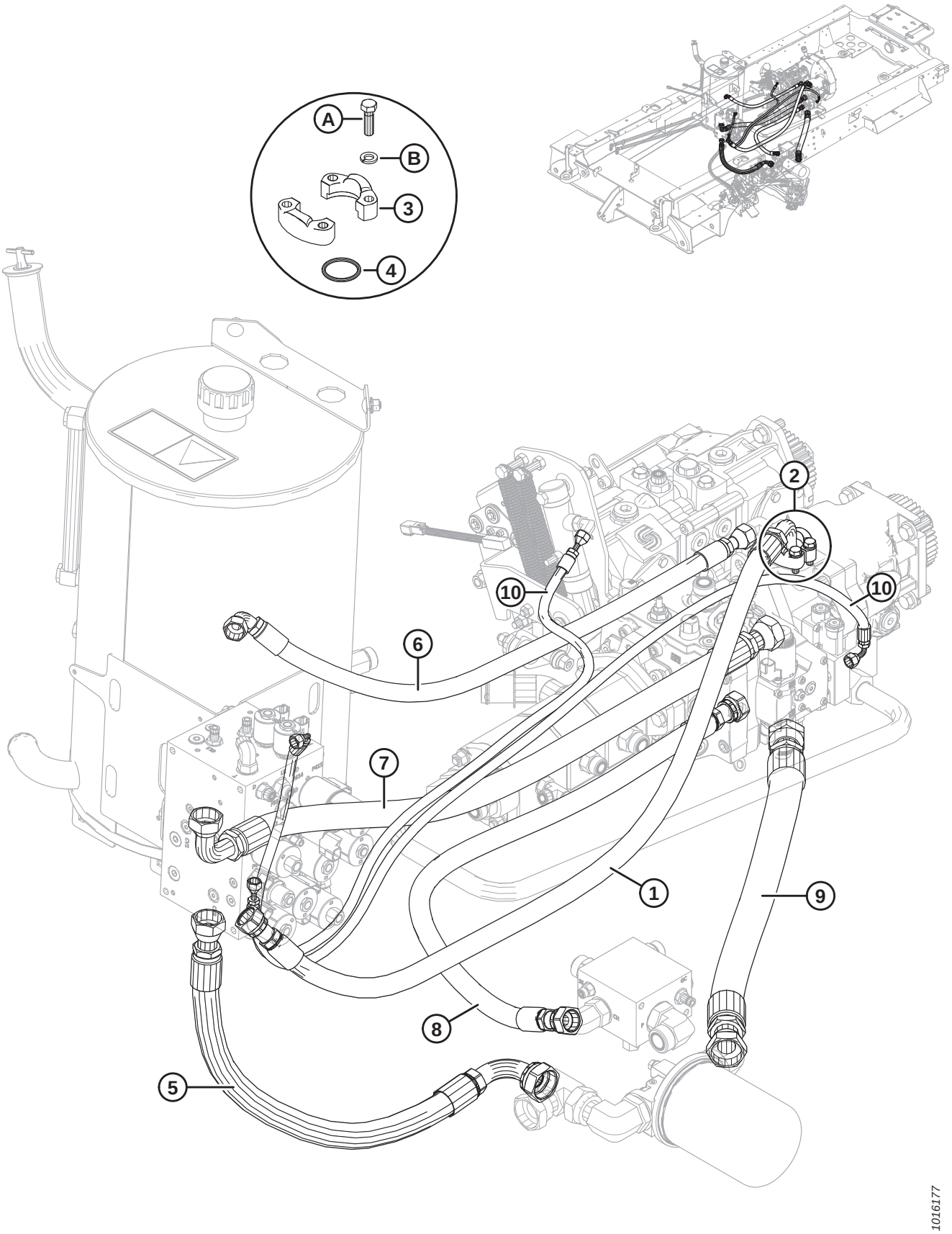

Ref	Part Number	Description	Qty	Serial Number
1	201733	HOSE – HYDRAULIC, 3/4 IN. I.D., 1370 MM LG	1	
2	112866	FLANGE – SPLIT, 1 IN. C/W HARDWARE	1	
3	194033	FLANGE – HALF SPLIT 1 IN., CODE 61	2	
4	112868	O-RING – 1.296 IN. I.D. X 0.139 IN. WALL	1	
5	201722	HOSE – HYDRAULIC, 1 IN. I.D., 700 MM LG	1	
6	201736	HOSE – HYDRAULIC, 5/8 IN. I.D., 920 MM LG	1	
7	201723	HOSE – HYDRAULIC, 1 IN. I.D., 1080 MM LG	1	
8	202903	HOSE – HYDRAULIC, 3/4 IN. I.D., 1080 MM LG	1	
9	201737	HOSE – HYDRAULIC, 1-1/4 IN. I.D., 790 MM LG [187]	1	–321189
	291675	HOSE – HYDRAULIC, 1-1/4 IN. I.D., 970 MM LG [188]	1	321190–
10	201845	HOSE – HYDRAULIC, 1/4 IN. I.D., 1450 MM LG	2	
A	21264	BOLT – HH 3/8 NC X 1.25 LG GR 5 ZP		
B	18637	WASHER – REG. LOCK 3/8 IN. NOM. I.D. ZP		

187. Used to service model years 2016–2017, with a 45° fitting (MD #136460) on filter head MD #151974. Refer to Section *72 Header Drive – Frame Interface, page 169*.
188. Used to service model year 2018 and later, with a 90° fitting (MD # 136363) on filter head MD #151974. Refer to Section *72 Header Drive – Frame Interface, page 169*.

90 Hydraulics – Closed Drive Lines

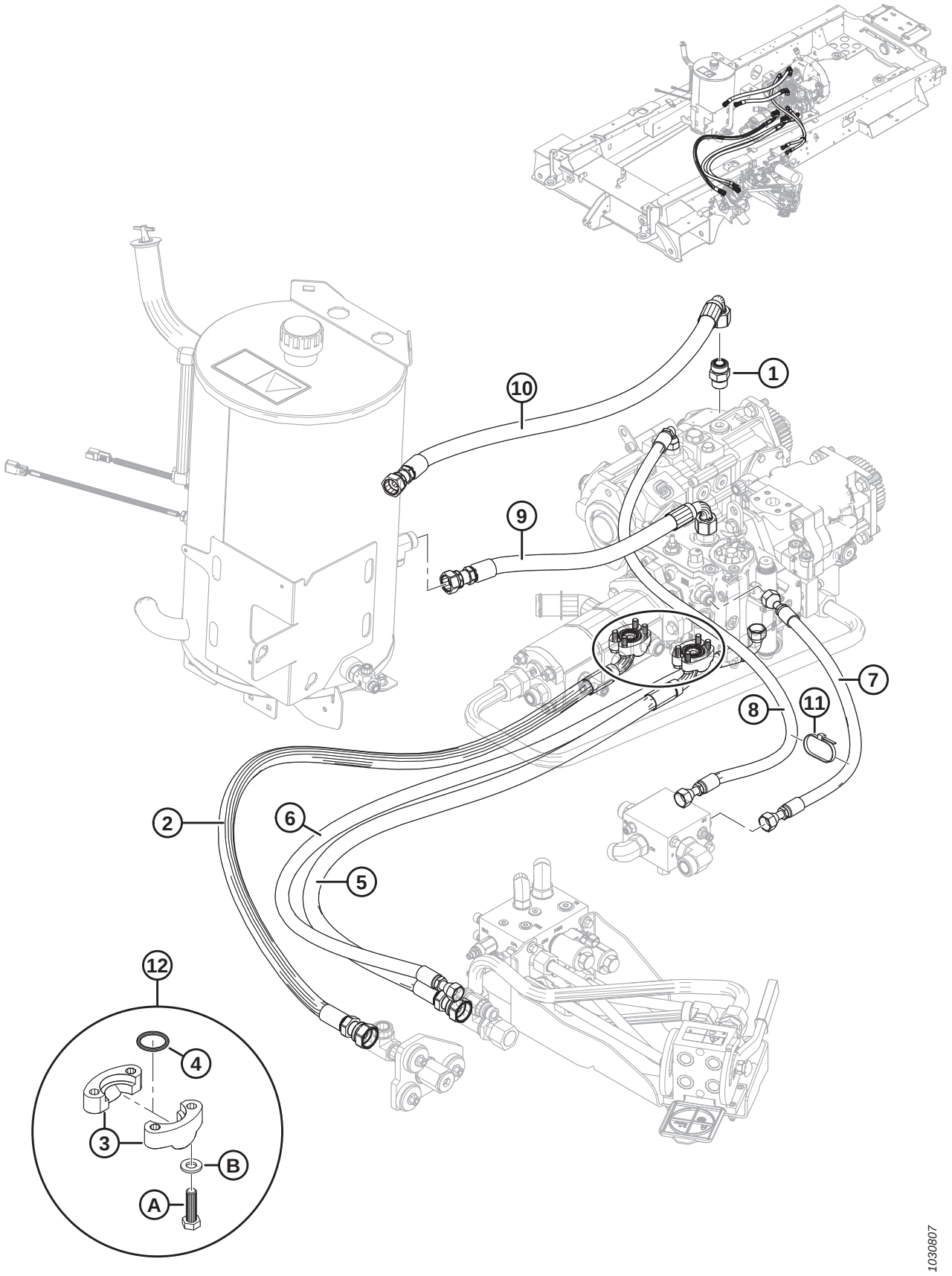

Ref	Part Number	Description	Qty	Serial Number
1	135788	FITTING – ADAPTER	1	
	30971	O-RING – SAE #12		
	135868	O-RING – #12 ORFS		
2	201835	HOSE – HYDRAULIC, 3/4 IN. I.D., 1570 MM LG	1	
3	194026	FLANGE – HALF SPLIT 3/4 IN., CODE 62	4	
4	150595	O-RING – 0.984 IN. I.D. X 0.139 IN. WALL	2	
5	203573	HOSE – HYDRAULIC, 3/4 IN. I.D., 1390 MM LG	1	
6	203574	HOSE – HYDRAULIC, 3/4 IN. I.D., 1680 MM LG	1	
7	203572	HOSE – HYDRAULIC, 1/2 IN. I.D., 650 MM LG	1	
8	201832	HOSE – HYDRAULIC, 1/2 IN. I.D., 1150 MM LG	1	
9	201734	HOSE – HYDRAULIC, 3/4 IN. I.D., 590 MM LG	1	
10	201735	HOSE – HYDRAULIC, 3/4 IN. I.D., 915 MM LG	1	
11	21763	FASTENER – CABLE TIE, BLACK, 160 MM LG	1	
12	320082	KIT – SPLIT FLANGE, 19 MM, CD62 [189]	2	
A	320081	BOLT – HEX HD M10 X 1.5 X 35-10.9-AA1J		
B	30655	WASHER – HARD M10-340HV-AB0C		

189. Kit includes O-ring (MD #150595), two half-split flanges (MD #194026), four bolts (MD #320081), and four washers (MD #30655).

91 Hydraulics – Traction Drive

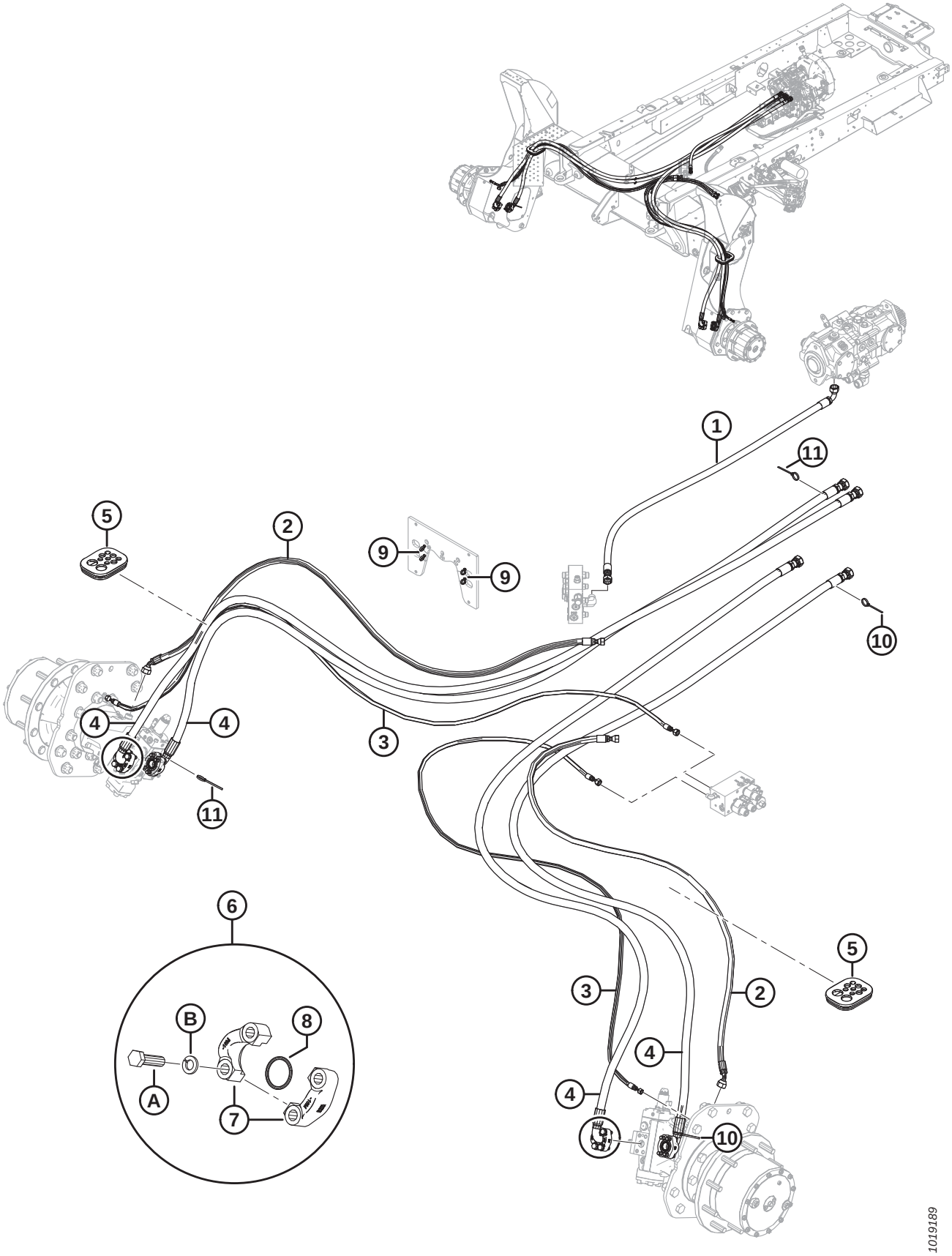

HYDRAULICS – TRACTION DRIVE

Ref	Part Number	Description	Qty	Serial Number
1	203937	HOSE – HYDRAULIC, 5/8 IN I.D., 1500 MM LG	1	
2	206184	HOSE – HYDRAULIC, 1/2 IN I.D., 2250 MM LG	2	
3	206623	HOSE – HYDRAULIC, 1/4 IN I.D., 2850 MM LG	2	
4	208579	HOSE – HYDRAULIC, 3/4 IN I.D., 3830 MM LG	4	
5	204760	GROMMET – LEG	2	
6	136838	FLANGE – SPLIT, CD 62 ISO 25 KIT	4	
7	136840	FLANGE – HALF SPLIT, CD 62 ISO 25	8	
8	112868	O-RING – 1.296 IN I.D. X 0.139 IN. WALL	4	
9	21763	FASTENER – CABLE TIE, BLACK, 160 MM LG	4	
10	40701	FASTENER – CABLE TIE, YELLOW	2	
11	40702	FASTENER – CABLE TIE, RED	2	
A	136881	BOLT – HEX HD M12 X 1.75 X 45-10.9-A3L		
B	30633	WASHER – LOC SPRING M12-CS-1055-1065-A2L		

92 Hydraulics – Control Lines

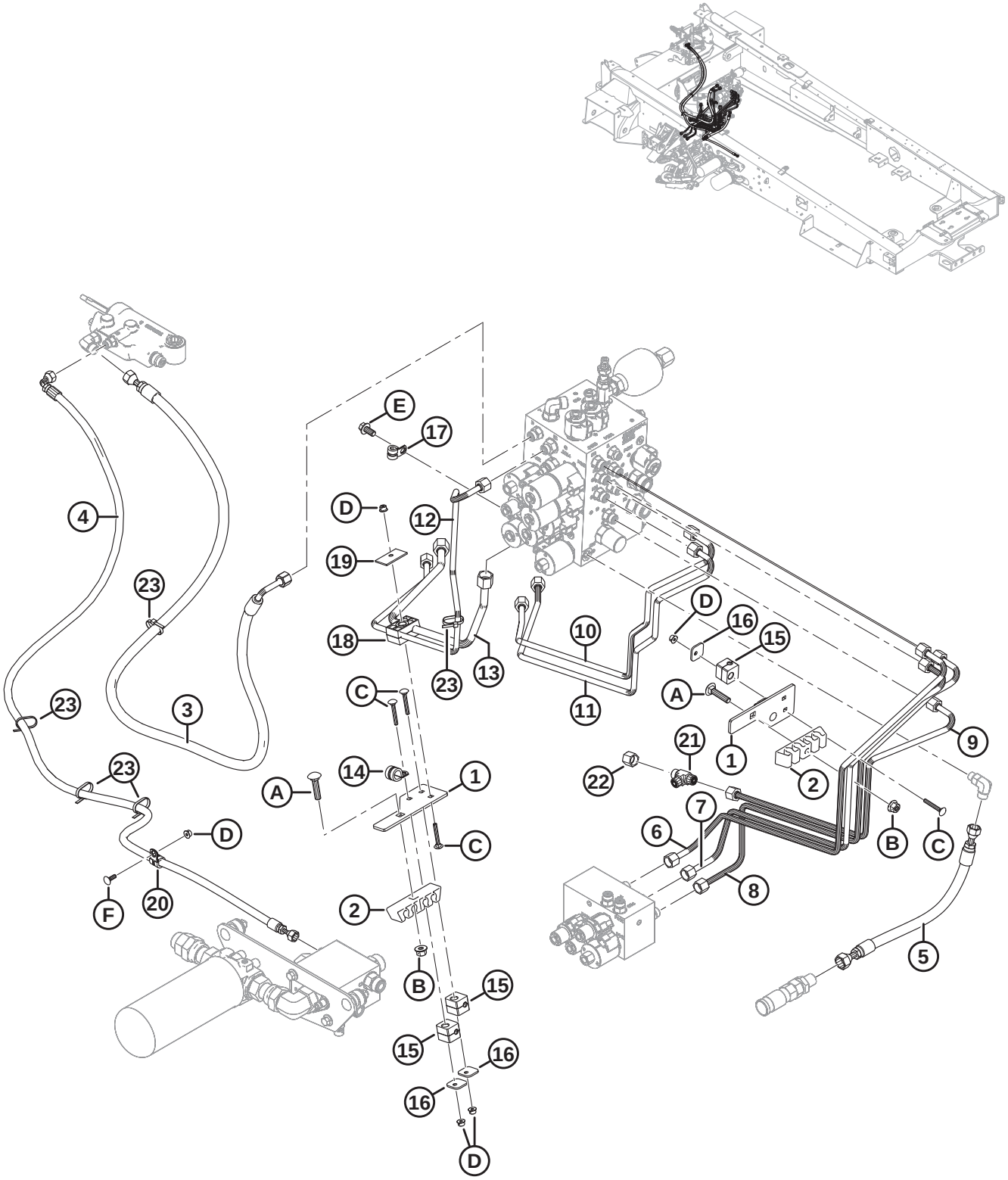

HYDRAULICS – CONTROL LINES

Ref	Part Number	Description	Qty	Serial Number
1	205356	PLATE – CLAMP MOUNT	2	
2	220478	CLAMP	2	
3	203979	HOSE – HYDRAULIC, 3/8 IN. I.D., 1700 MM LG	1	
4	203984	HOSE – HYDRAULIC, 1/4 IN. I.D., 1870 MM LG	1	
5	205273	HOSE – HYDRAULIC, 3/8 IN. I.D., 380 MM LG	1	
6	207425	LINE – HYDRAULIC, 3/8 IN. DIA	1	
7	203975	LINE – HYDRAULIC, 3/8 IN. DIA	1	
8	203974	LINE – HYDRAULIC, 3/8 IN. DIA	1	
9	207426	LINE – HYDRAULIC, 3/8 IN. DIA	1	
10	203966	LINE – HYDRAULIC, 3/8 IN. DIA	1	
11	203967	LINE – HYDRAULIC, 3/8 IN. DIA	1	
12	206208	LINE – HYDRAULIC, 3/8 IN. DIA	1	
13	207446	LINE – HYDRAULIC, 1/2 IN. DIA	1	
14	135716	CLAMP – INSULATED 5/8 IN.	1	
15	184304	CLAMP PAIR – TUBE 3/8 IN. DIA (PAIR)	4	
16	184305	CLAMP – COVER PLATE	4	
17	136410	CLAMP – INSULATED 3/8 IN.	1	
18	184307	CLAMP PAIR – TUBE 0.5 IN./0.375 IN. CLAMP	1	
19	184303	CLAMP – COVER PLATE	1	
20	135818	CLAMP – INSULATED 1/2 IN.	1	
21	136098	FITTING – TEE HYD	1	
	135865	O-RING – #6 ORFS		
22	136325	CAP – HYD SAE-6 ORFS	1	
23	21763	FASTENER – CABLE TIE, BLACK, 160 MM LG	5	
A	136421	BOLT – RHSN M10 X 1.5 X 45-8.8-A3L		
B	135799	NUT – HEX FLG CTR LOC M10 X 1.5-10-A3L		
C	136731	BOLT – RHSN M6 X 1 X 45-8.8-A2L		
D	152668	NUT – HEX FLG CTR LOC M6 X 1-8-A2L		
E	152655	BOLT – HEX FLG HD M10 X 1.5 X 20-8.8-A3L		
F	184641	BOLT – RHSN M6 X 1 X 20-8.8-A2L		

93 Hydraulics – Lift System

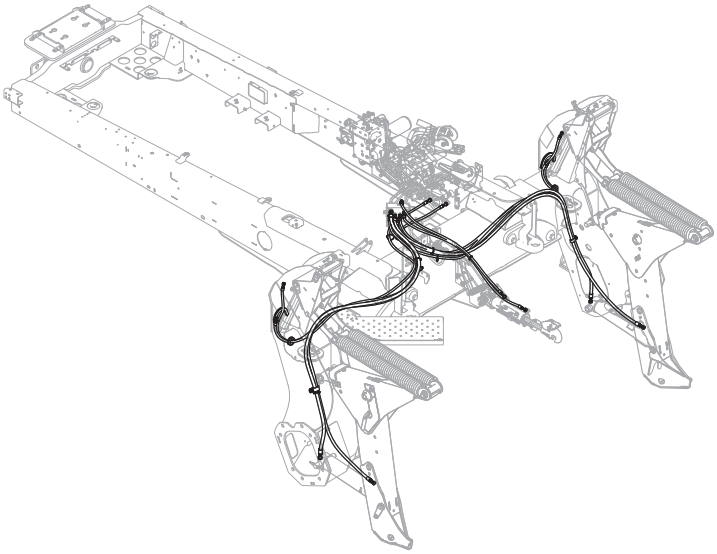

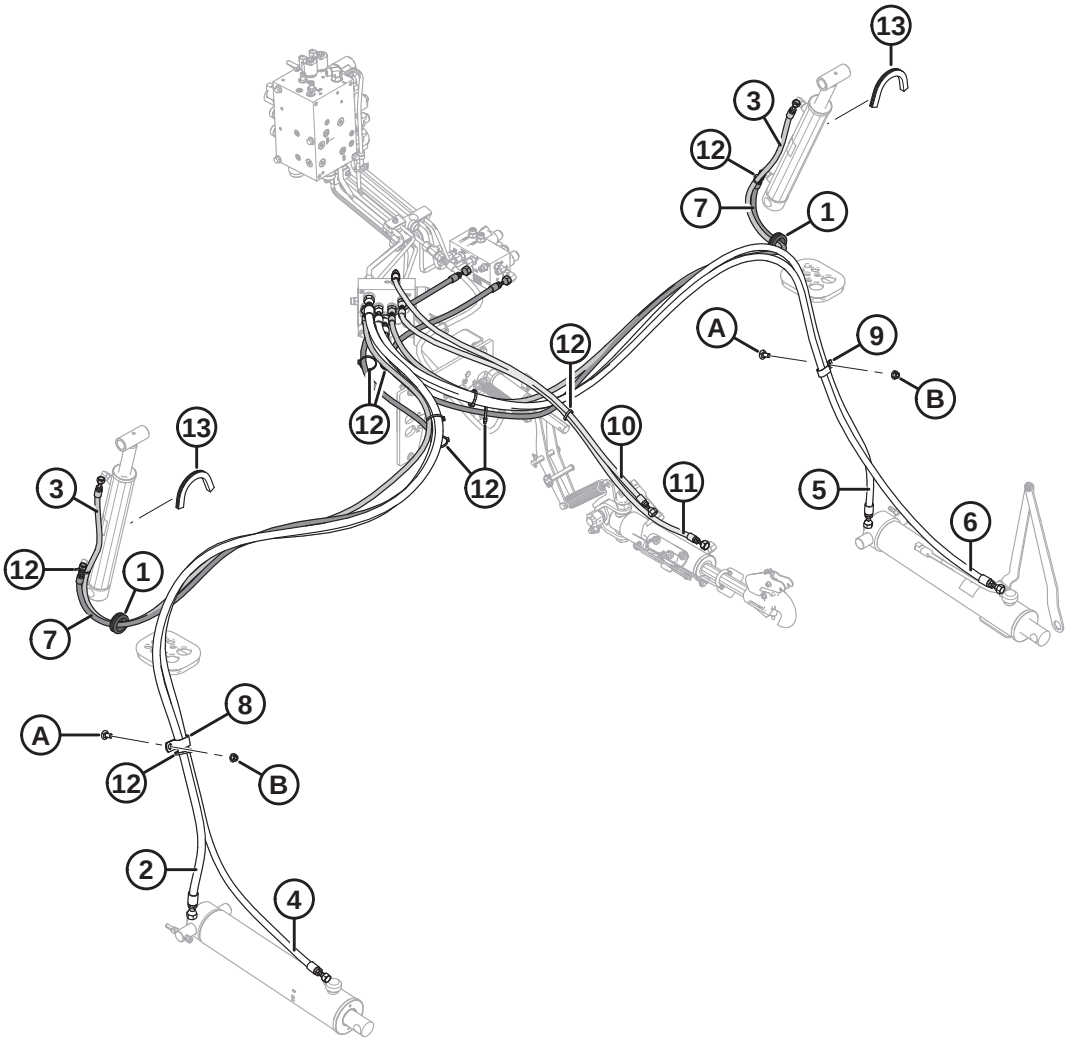

HYDRAULICS – LIFT SYSTEM

Ref	Part Number	Description	Qty	Serial Number
1	174149	GROMMET – 1.50 IN. I.D.	2	
2	206193	HOSE – HYDRAULIC, 1/2 IN. I.D., 2550 MM LG	1	
3	206195	HOSE – HYDRAULIC, 1/4 IN. I.D., 2250 MM LG	2	
4	206194	HOSE – HYDRAULIC, 3/8 IN. I.D., 2800 MM LG	1	
5	206196	HOSE – HYDRAULIC, 3/8 IN. I.D., 2500 MM LG	1	
6	208325	HOSE – HYDRAULIC, 3/8 IN. I.D., 2800 MM LG	1	
7	206192	HOSE – HYDRAULIC, 1/4 IN. I.D., 2420 MM LG	2	
8	103738	CLAMP – PVC INSULATED 13/16 IN. TUBE SIZE	1	
9	135235	CLAMP – DOUBLE HOSE INSULATED	1	
10	207454	HOSE – HYDRAULIC, 1/4 IN. I.D., 1200 MM LG	1	
11	207455	HOSE – HYDRAULIC, 1/4 IN. I.D., 1360 MM LG	1	
12	21763	FASTENER – CABLE TIE, BLACK, 160 MM LG	10	
13	141220	SEAL – EDGE TRIM	2	
A	135785	BOLT – RHSN M10 X 1.5 X 25-8.8-A3L		
B	135799	NUT – HEX FLG CTR LOC M10 X 1.5-10-A3L		

94 Hydraulics – Line Supports

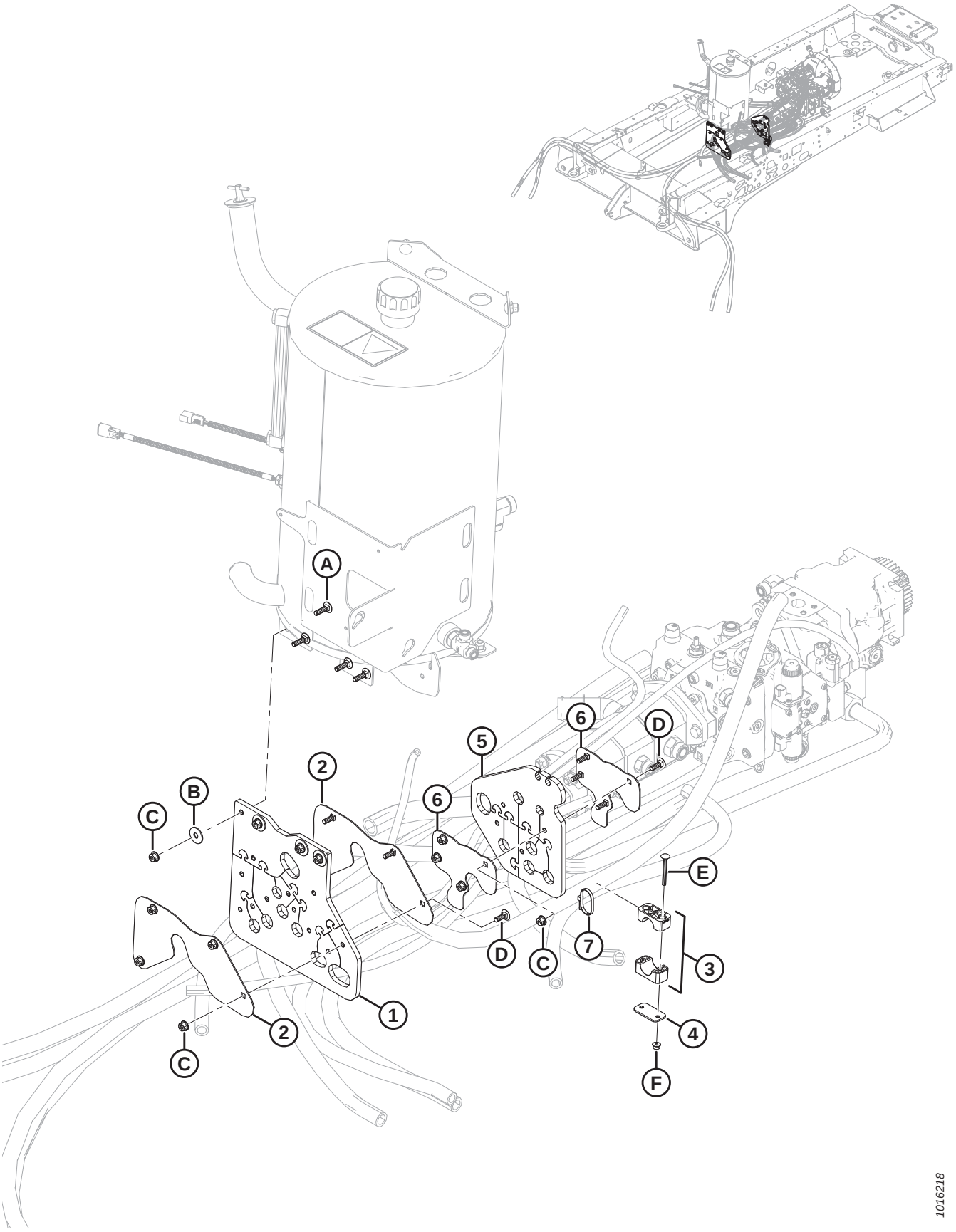

HYDRAULICS – LINE SUPPORTS

Ref	Part Number	Description	Qty	Serial Number
1	203132	STRAP – LINE SUPPORT	1	
2	203380	PLATE – ROUTING CLAMP	2	
3	136647	CLAMP – LINE	1	
4	136648	CLAMP – COVER PLATE	1	
5	306323	STRAP – LINE SUPPORT	1	
6	203647	PLATE – ROUTING CLAMP	2	
7	21763	FASTENER – CABLE TIE, BLACK, 160 MM LG	1	
A	190752	BOLT – RHSN M8 X 1.25 X 30-8.8-A2L		
B	19685	WASHER – FLAT		
C	135337	NUT – HEX FLG CTR LOC M8 X 1.25-8-A2L		
D	184648	BOLT – RHSN M8 X 1.25 X 25-8.8-A3L		
E	184645	BOLT – RHSN M6 X 1 X 60-8.8-A2L		
F	152668	NUT – HEX FLG CTR LOC M6 X 1-8-A2L		

95 Electrical – Chassis

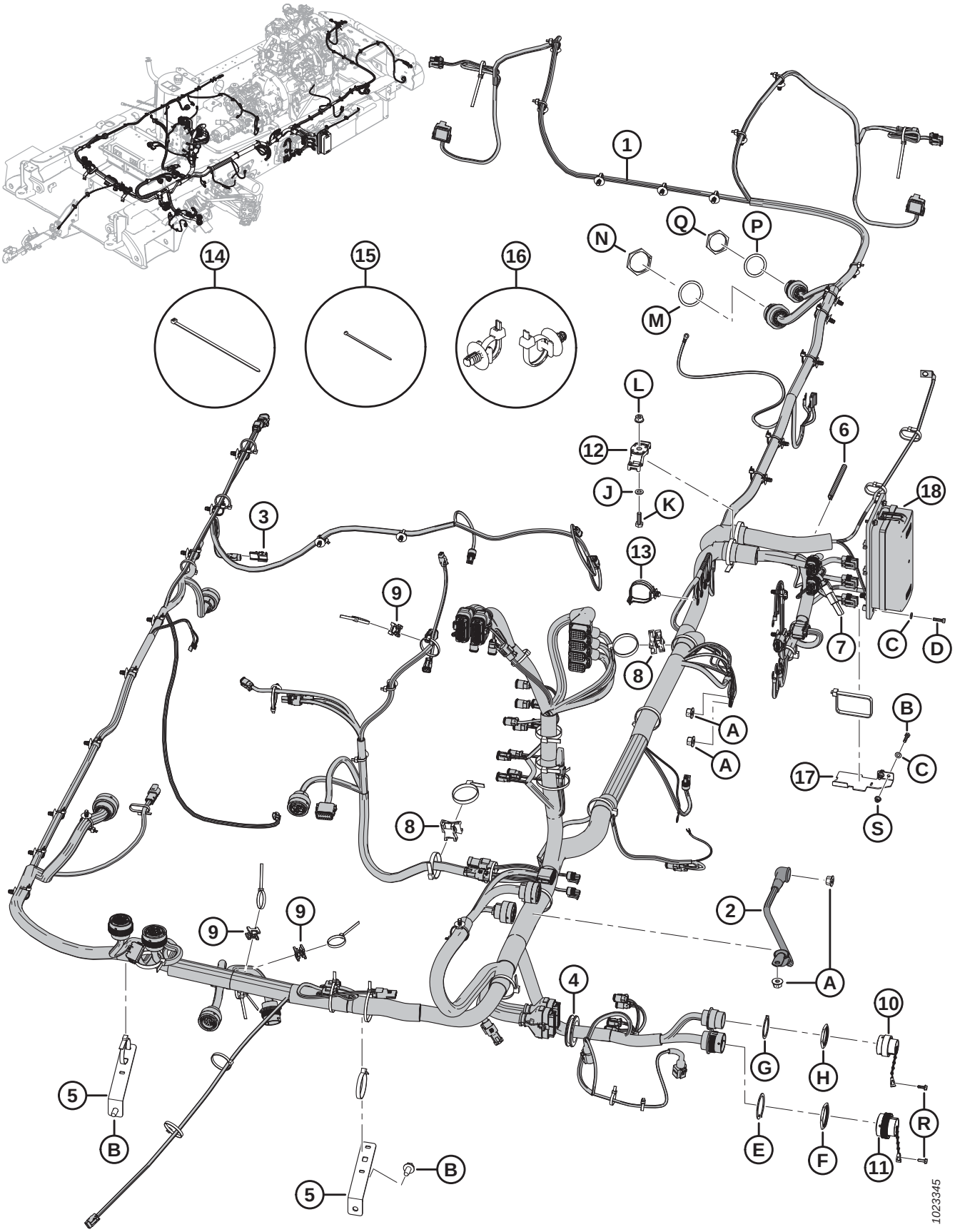

NOTE:

Contact your Dealer for information regarding software updates to the electronic modules. Your Dealer will have the necessary interface tools and access to the latest software upgrades. For specific electrical harness parts, refer to Electrical Connectors Parts Catalog (MD #169641).

Ref	Part Number	Description	Qty	Serial Number
1	**306450**	**HARNESS – CHASSIS, M1 SERIES**	**1**	
	208769	**RESISTOR PACK – 1K OHM** [190]		
	500470	CONNECTOR – DEUT, DT,3/M,J1939 (CAN TERMINATOR)		
2	201408	CABLE – GROUND, FRAME TO CAB	1	
3	134612	CLIP – RECEPTACLE MOUNT	1	
4	172899	GROMMET – 1.75 IN. I.D.	1	
5	207558	SUPPORT – HARNESS	2	
6	31889	MOULDING	1	
7	291262	CAPACITOR – TURN SIGNAL FILTER	1	
8	134443	SPACER – DUAL SADDLE, H.T. TYPE DSWS5	2	
9	134442	SPACER – DUAL SWIVEL SADDLE	3	
10	134803	CAP – PLUG, DEUTSCH, HDC36, SIZE 18	1	
11	134053	CAP – PLUG, HD30, SIZE 24	1	
12	134725	FASTENER – HIGH TORQUE, DBL MOUNT	1	
13	134714	FASTENER – FIR TREE MOUNT, W/ TIE	1	
14	30753	FASTENER – CABLE TIE, BLACK, 305 MM LG [191]	20	
15	21763	FASTENER – CABLE TIE, BLACK, 160 MM LG [191]	21	
16	136655	FASTENER – FIR TREE MOUNT W/ TIE, 200 MM LG [191]	31	
17	306007	BRACKET – HARNESS SUPPORT	1	
18	REF	MAIN FUSE BLOCK [192]		
A	135799	NUT – HEX FLG CTR LOC M10 X 1.5-10-A3L		
B	136209	SCREW – HEX WASHER HD M10 X 1.5 X 20-450HV-A3L		
C	184705	WASHER – FLAT M6-200HV-A2L		
D	184640	BOLT – HEX HD M5 X 0.8 X 20-8.8-A2L		
E	134011	WASHER – LOCK SPRING, DEUTSCH HD, SIZE 24		
F	134010	NUT – PANEL, HD30, SIZE 24		
G	134603	WASHER – LOCK, HD30, SIZE 18		
H	134602	NUT – PANEL, HD30, SIZE 18		
J	184708	WASHER – FLAT M8-200HV-A2L		
K	184652	BOLT – HEX HD TFL M8 X 1.25 X 25-8.8-A2L		
L	135337	NUT – HEX FLG CTR LOC M8 X 1.25-8-A2L		
M	134730	WASHER – LOCK, HDP20, SIZE 24		
N	134728	NUT – PANEL, HDP20, SIZE 24		
P	134729	WASHER – LOCK, HDP20, SIZE 18		
Q	134727	NUT – PANEL, HDP20, SIZE 18		

190. The resistor pack is used in two locations: cooling fan speed sensor pull up resistor and master controller addressing resistor.
191. Illustration shows fastener locations.
192. For service parts, refer to Section *96 Main Fuse Panel, page 221*.

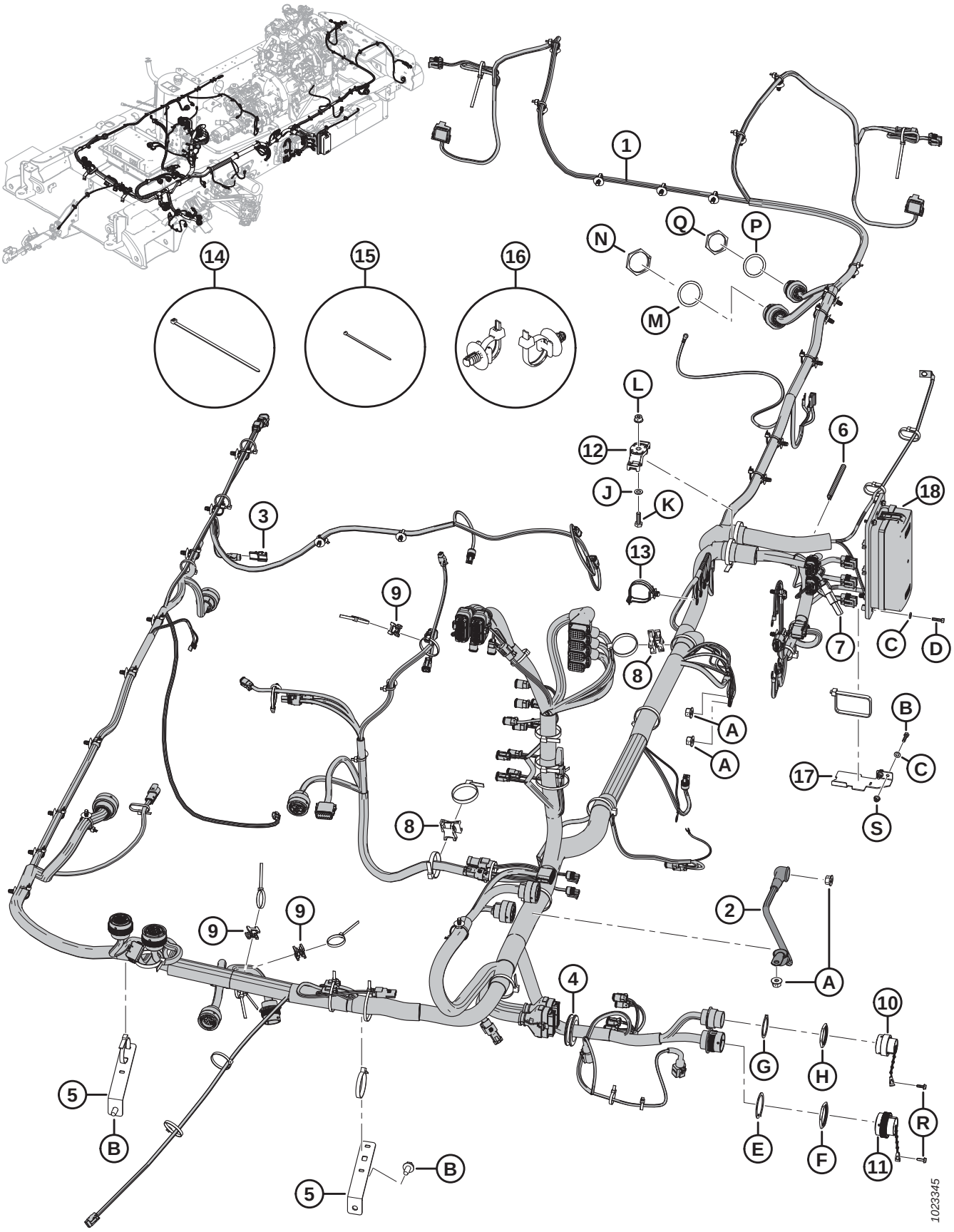
1
2
3
4
5
6
7
8
9
10
11
12
13
14
15
16
17
18
A
B
C
D
E
F
G
H
J
K
L
M
N
P
Q
R
S
1023345

Ref	Part Number	Description	Qty	Serial Number
R	21947	SCREW – SELF TAPPING HEX WASH HD #10 X 5/8 ZP		
S	136635	NUT – HEX FLG CTR LOC M5 X 0.8-8-AA1J		

96 Main Fuse Panel

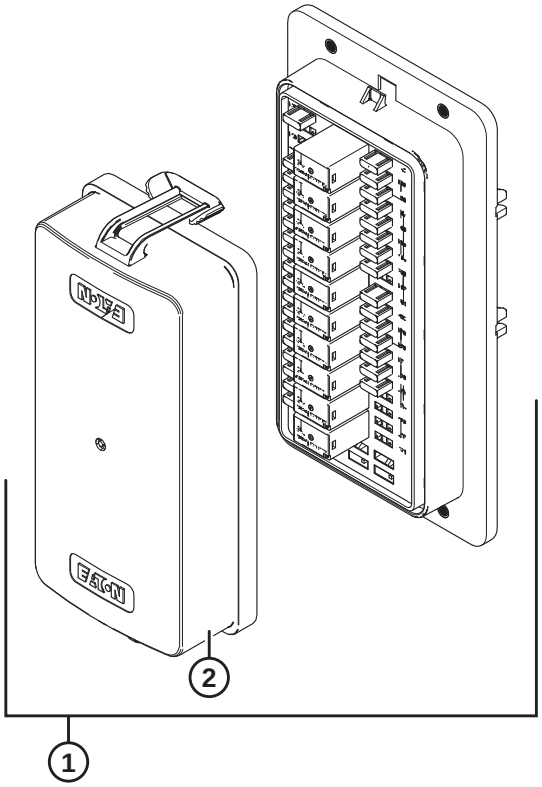

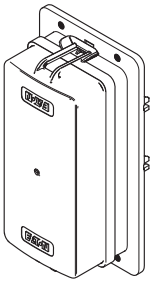

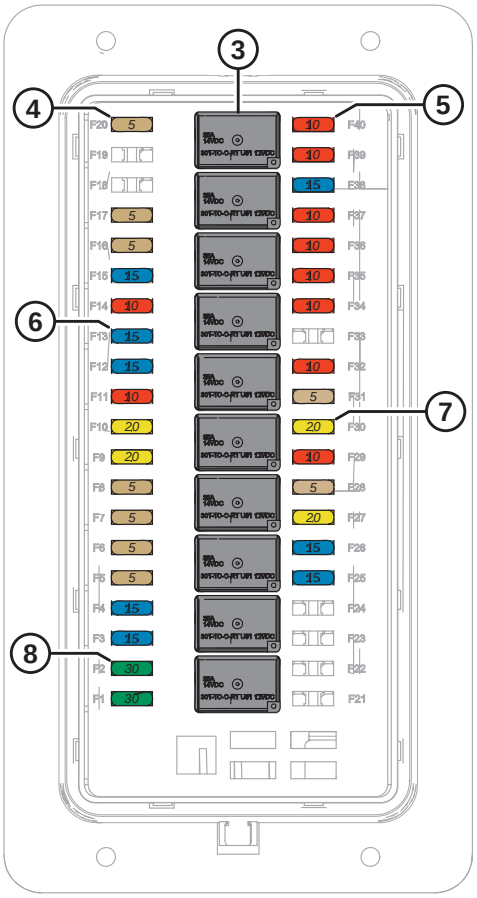

1030660

MAIN FUSE PANEL

Ref	Part Number	Description	Qty	Serial Number
1	205325	MODULE – REAR-FED FUSE AND RELAY [193]	1	
2	291131	COVER – FUSE PANEL	1	
3	134457	RELAY – MICRO ISO 280, 12 VDC	10	
4	134445	FUSE – ATM, MINI, 5 AMP (TAN)	9	
5	134446	FUSE – ATM, MINI, 10 AMP (RED)	10	
6	134447	FUSE – ATM, MINI, 15 AMP (BLUE)	8	
7	134448	FUSE – MINI, 20 AMP (YELLOW)	4	
8	134450	FUSE – MINI, 30 AMP (GREEN)	2	

193. Refer to Section *95 Electrical – Chassis, page 217*.

97 Electrical – Chassis Components

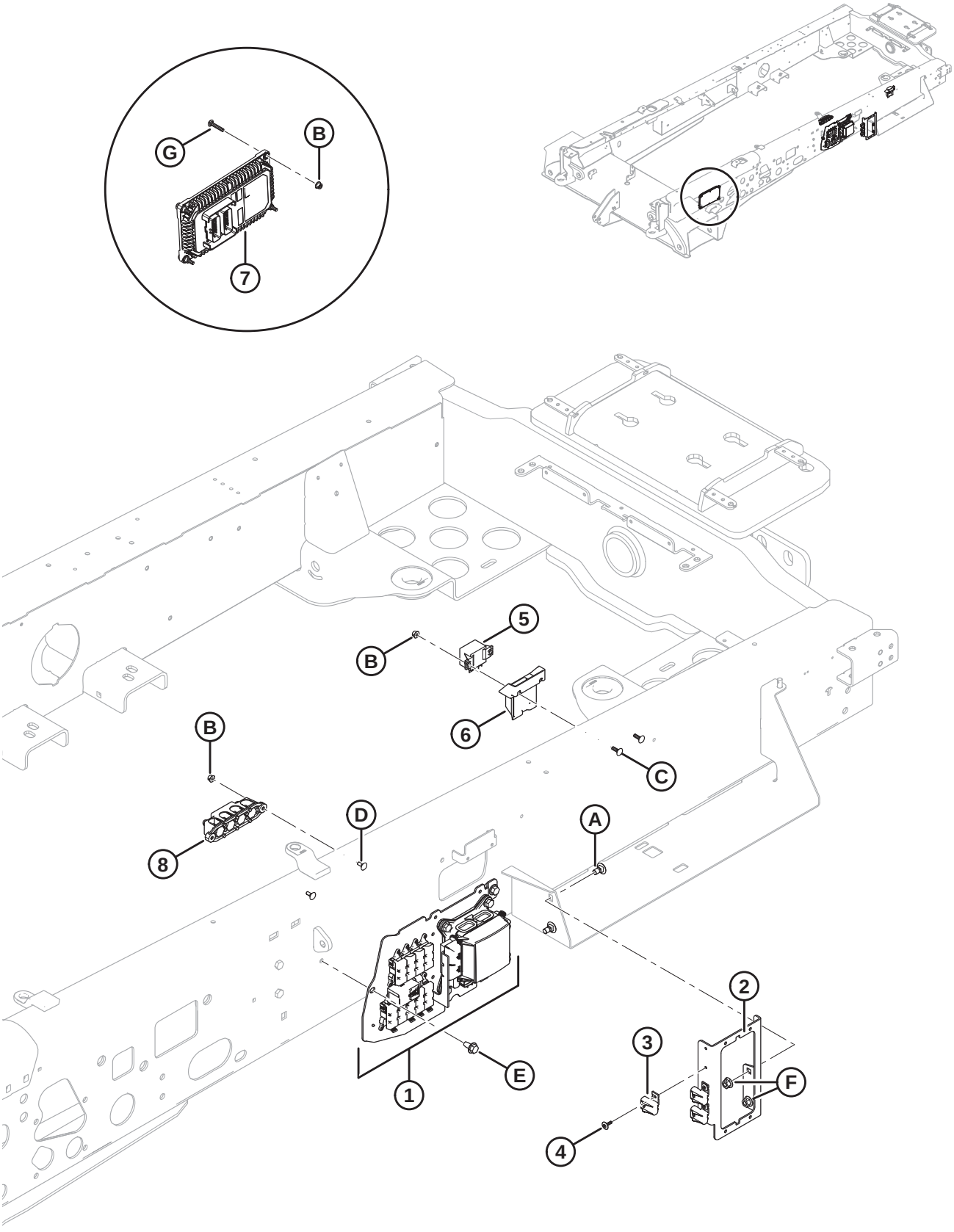

ELECTRICAL – CHASSIS COMPONENTS

Ref	Part Number	Description	Qty	Serial Number
1	REF	ASSY – PANEL, RELAY MODULE AND AMI FUSE BLOCK [194]		
2	209946	SUPPORT – FUSE BOX	1	
3	134523	COVER – ATO FUSE	3	
4	136536	RIVET – BLIND 3/16 IN. X 0.50 IN. BLACK	3	
5	111504	STARTER RELAY – 12V, 75A	1	
6	183258	SHIELD – STARTER RELAY	1	
7	201396	MODULE – EXTENSION MODULE	1	
8	134711	BUSS BAR – 4PT, M8, W/ COVER, BLACK	1	
A	136178	BOLT – RHSN M10 X 1.5 X 20-8.8-A3L		
B	152668	NUT – HEX FLG CTR LOC M6 X 1-8-A2L		
C	184641	BOLT – RHSN M6 X 1 X 20-8.8-A2L		
D	136748	BOLT – RHSN M6 X 1 X 16-8.8-A2L		
E	136209	SCREW – HEX WASHER HD M10 X 1.5 X 20-450HV-A3L		
F	135799	NUT – HEX FLG CTR LOC M10 X 1.5-10-A3L		
G	**184643**	**BOLT – RHSSN M6 X 1.0 X 35-8.8-AA1J**		

194. Refer to Section *98 Chassis Relay Module and Fuse Panel Assembly, page 225*.

98 Chassis Relay Module and Fuse Panel Assembly

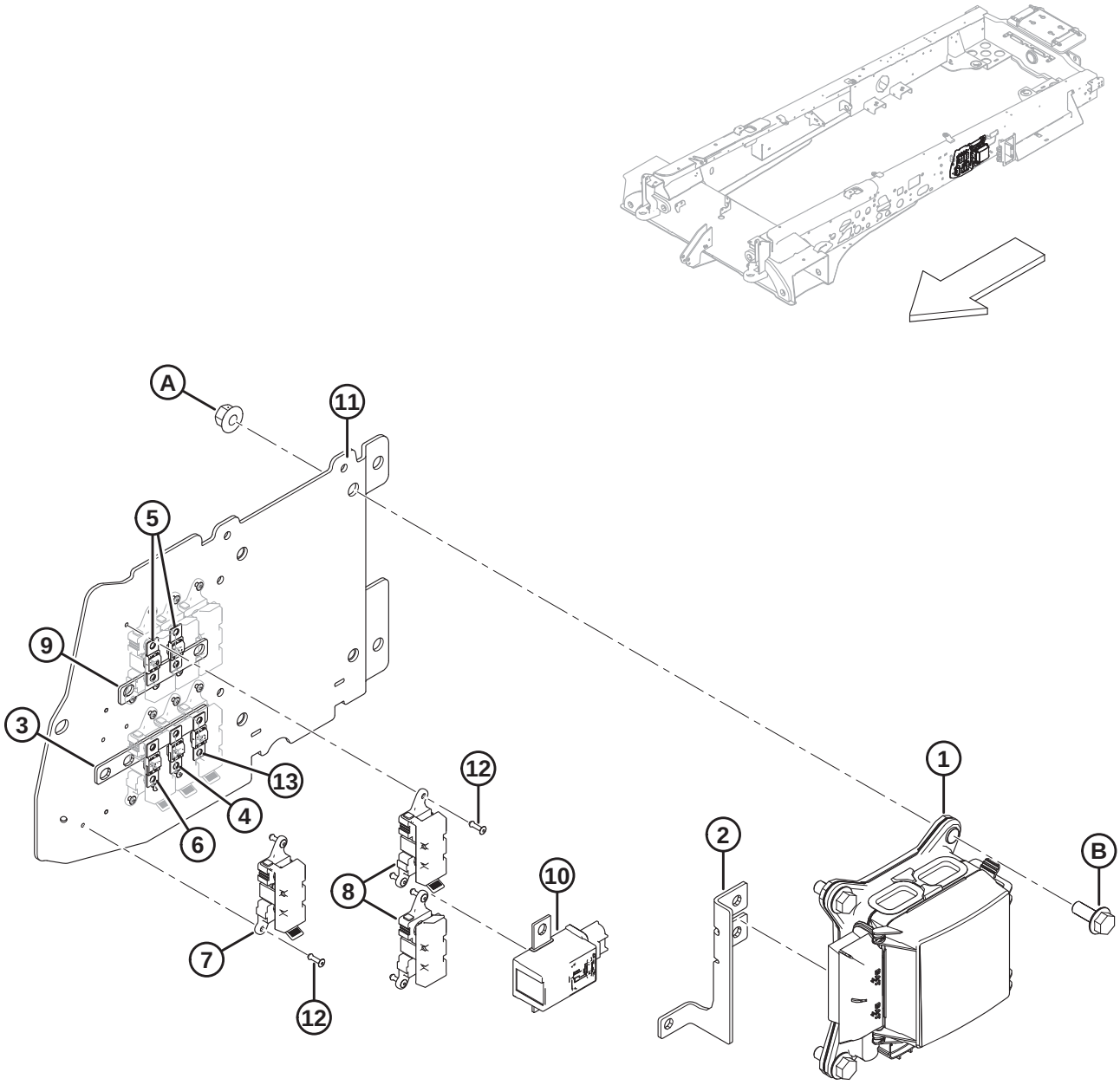

CHASSIS RELAY MODULE AND FUSE PANEL ASSEMBLY

Ref	Part Number	Description	Qty	Serial Number
1	208158	MODULE – RELAY MODULE, 12 RELAY [195]	1	
2	134713	BUSS BAR – RELAY MODULE INPUT POWER	1	
3	293042	BUSS BAR – LMI AMI 5 POSITION	1	
4	134684	FUSE – AMI, 125 AMPS, WHITE	1	
5	134653	FUSE – AMI, 50 AMPS, RED	2	
6	134655	FUSE – AMI, 100 AMPS, BLUE	1	
7	293037	MODULE – LMI, FUSE	7	
8	293038	MODULE – LMI, INPUT	2	
9	293041	BUSS BAR – LMI AMI 4 POSITION	1	
10	209013	RELAY – BAT DISCONNECT SW, BDS-A	1	
11	207395	SUPPORT – RELAY MODULE AND AMI FUSES	1	
12	184612	RIVET – ALUMINUM 1/8 IN. X 3/16 IN.-1/4 IN.	18	
13	134654	FUSE – AMI, 80 AMPS, WHITE	1	
A	135799	NUT – HEX FLG CTR LOC M10 X 1.5-10-A3L		
B	135783	BOLT – HEX HD FLANGE M10 X 1.5 X 25 LG ZP		

195. For service parts, refer to Section *99 Chassis Relay Module – Service Parts, page 227*.

99 Chassis Relay Module – Service Parts

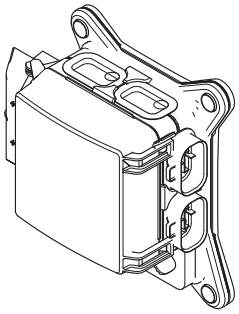

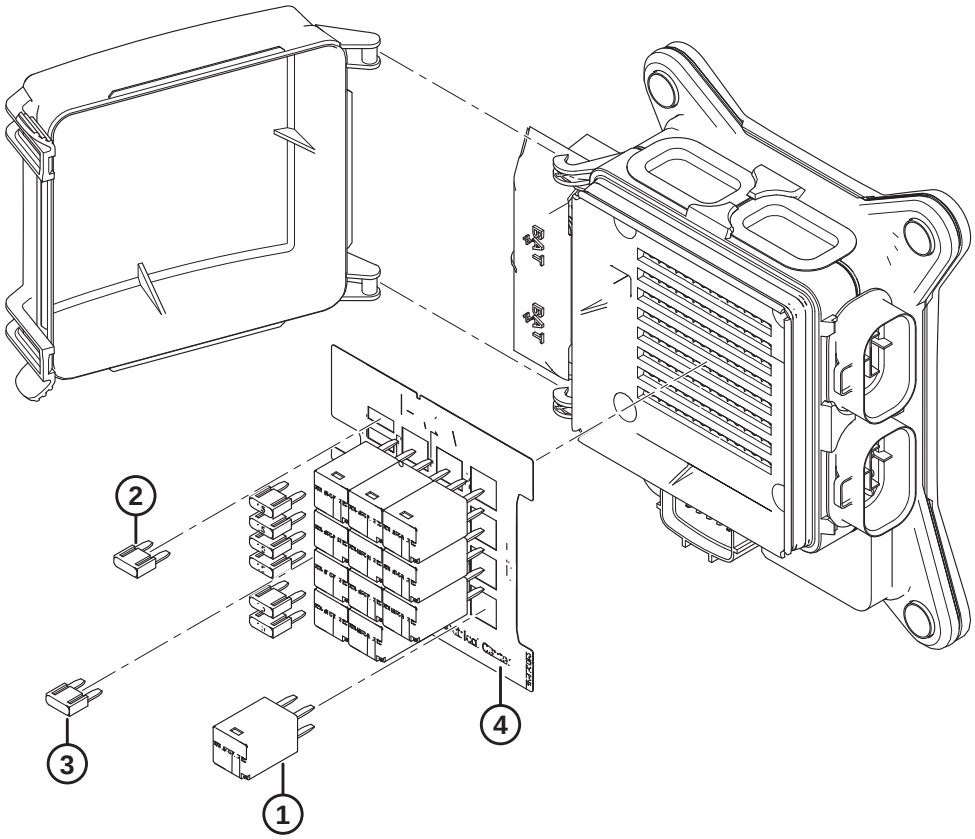

1037242

CHASSIS RELAY MODULE – SERVICE PARTS

Ref	Part Number	Description	Qty	Serial Number
	208158	MODULE – RELAY MODULE, 12 RELAY [196]		
1	134458	RELAY – ULTRA MICRO, ISO SPST	**12**	
2	134447	FUSE – ATM, MINI, 15 AMP, BLUE	**7**	
3	134446	FUSE – ATM, MINI, 10 AMP, RED	1	
4	NSS	DECAL – RELAY MODULE, 12 RELAY	1	

196. Refer to Section *98 Chassis Relay Module and Fuse Panel Assembly, page 225*.

100 Electrical – Battery and Cover

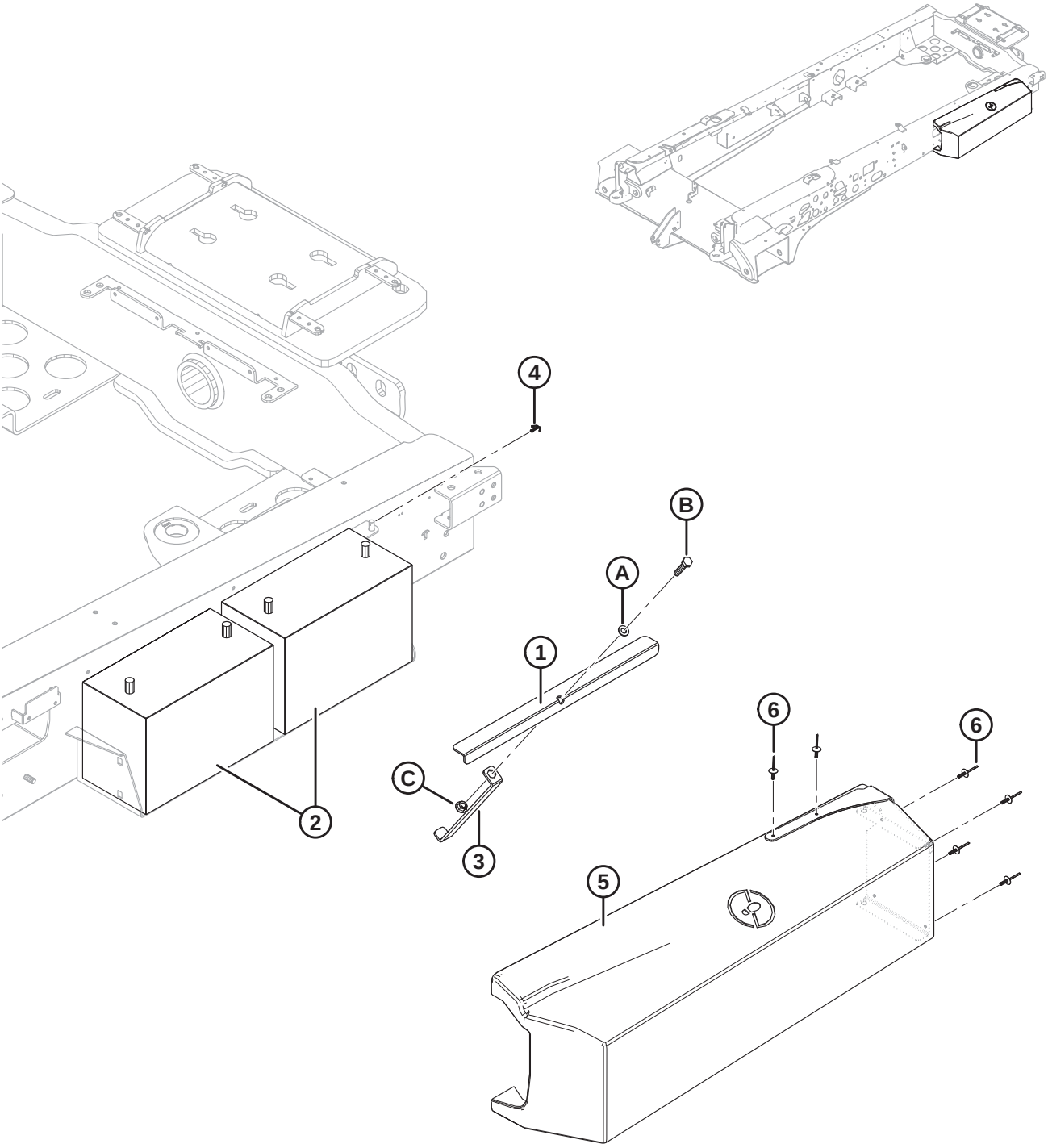

1020118

ELECTRICAL – BATTERY AND COVER

Ref	Part Number	Description	Qty	Serial Number
1	183115	ANGLE – BATTERY	1	
2	NSS	BATTERY – 12 V, 31A-760	2	
3	203930	STRAP – BATTERY	1	
4	18605	PIN – COTTER 1/8 DIA X 1 ZP	1	
5	209929	ASSEMBLY – BATTERY COVER [197]	1	
6	136536	RIVET – BLIND 3/16 IN. X 0.50 IN. BLACK	6	
A	184711	WASHER – FLAT REG M10-200HV-A3L		
B	136229	BOLT – HEX HD TFL M10 X 1.5 X 45 X SPCL-8.8-A3L		
C	135927	NUT – HEX SMTH FLG M10 X 1.5-8-A3L		

197. Includes battery cover, cover support, and six rivets (MD #136536).

101 Electrical – Battery Cables

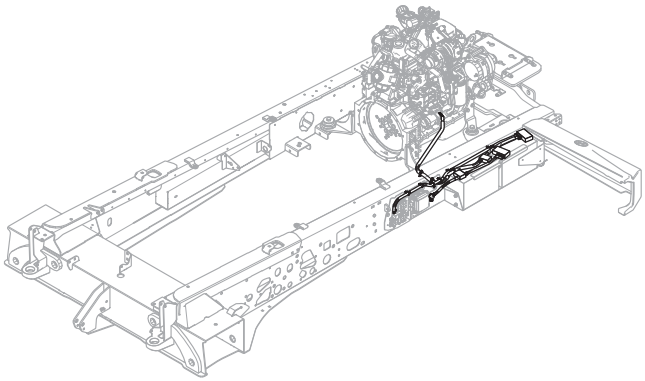

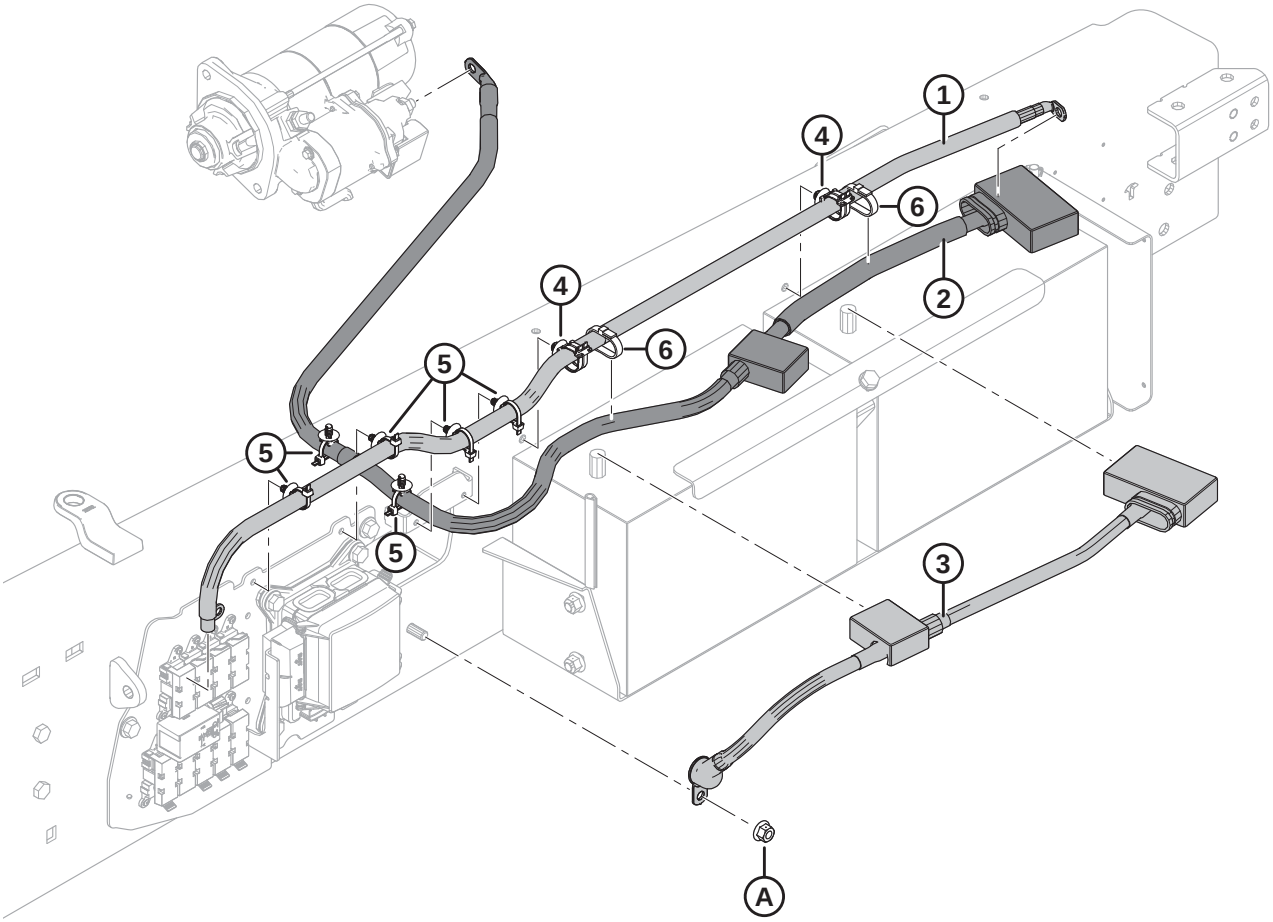

1023356

ELECTRICAL – BATTERY CABLES

Ref	Part Number	Description	Qty	Serial Number
1	207288	CABLE – BATTERY DISCONNECT	1	
2	207287	CABLE – DUAL BATTERY POS. (+)	1	
3	207286	CABLE – DUAL BATTERY NEG. (–)	1	
4	134714	FASTENER – FIR TREE MT, W/ TIE	2	
5	136655	FASTENER – FIR TREE MOUNT W/ CABLE TIE	6	
6	30753	FASTENER – CABLE TIE, BLACK, 305 MM LG	2	
A	135799	NUT – HEX FLG CTR LOC M10 X 1.5-10-A3L		

102 Electrical – Engine

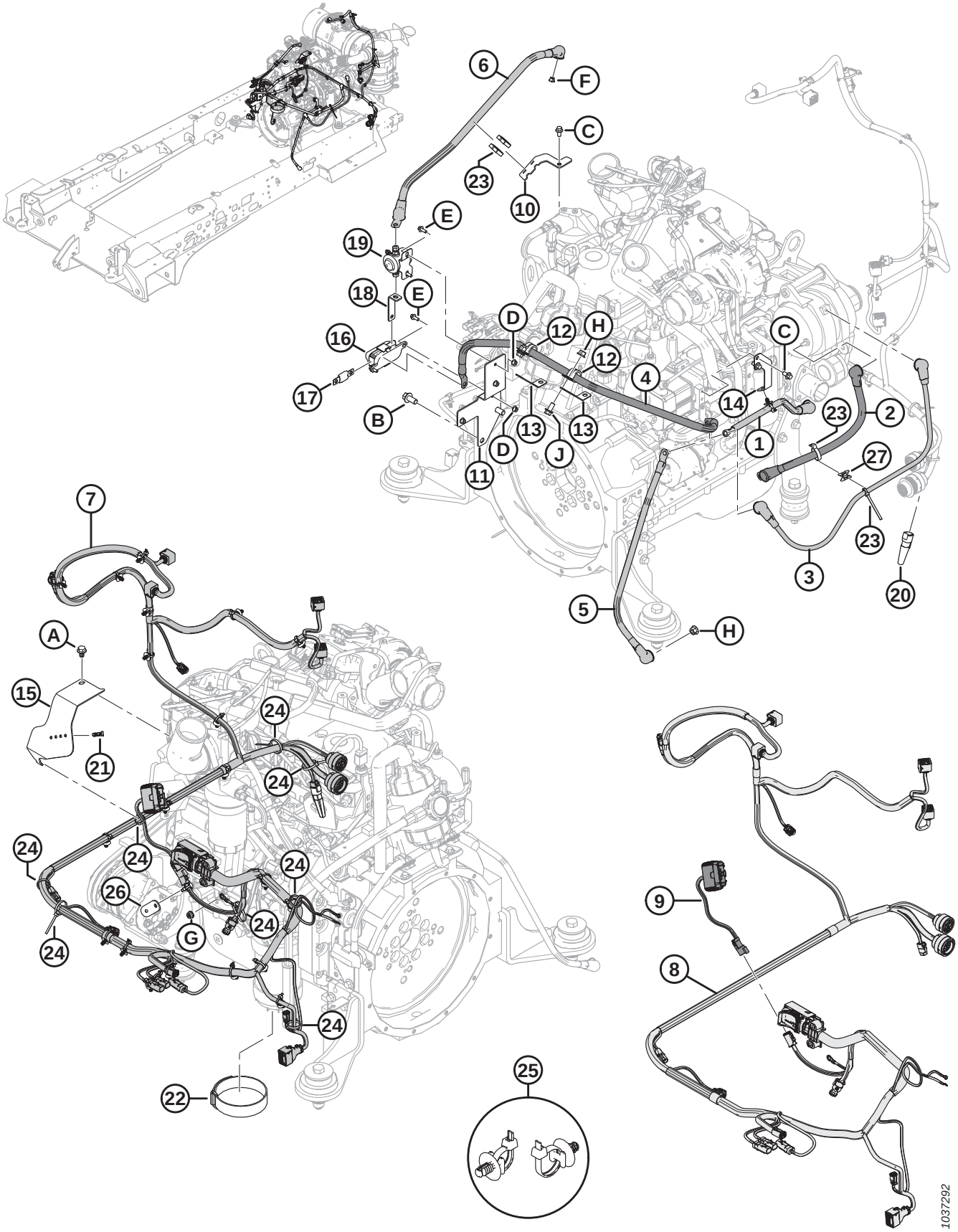

Ref	Part Number	Description	Qty	Serial Number
1	207993	CABLE – ENGINE BLOCK, GROUND	1	
2	209746	CABLE – STARTER TO ALT, RED (POSITIVE)	1	
	134748	COVER – BOOT, 2-2/0 GA, RED	2	
3	209747	CABLE – STARTER TO ALT, BLACK (GROUND)	1	
	134756	COVER – BOOT, 2-2/0 GA, BLACK	2	
4	207289	CABLE – GRID HTR FUSE	1	
5	205486	CABLE – STARTER GROUND	1	
6	207437	CABLE – GRID HEATER	1	
7	306515	ASSEMBLY – HARNESS, ENGINE, 2022–LATER [198]	1	421190–
	500470	CONNECTOR – DEUT, DT, 3/M, J1939 (CAN TERMINATOR)		
	207903	HARNESS – ENGINE, M1 SERIES, 2021–PRIOR [199]	1	–421189
	500470	CONNECTOR – DEUT, DT, 3/M, J1939 (CAN TERMINATOR)		
	207304	HARNESS – ENGINE, M1 SERIES, 2017–PRIOR [200]	A/R	
8	306511	HARNESS – ENGINE, M1 SERIES	1	
9	160705	HARNESS – ENGINE EXT	1	
10	208073	BRACKET – CABLE SUPPORT	1	
11	207456	SUPPORT – GRID HEATER RELAY	1	
12	209018	CLAMP – INSULATED 7/8 IN.	2	
13	207457	BRACKET – CABLE SUPPORT	2	
14	208074	BRACKET – CABLE SUPPORT	1	
15	310932	SUPPORT – HARNESS	1	
16	209736	HOLDER – FUSE	1	
17	200586	FUSE – AMG, 250 AMP, 35 VOLTS	1	
18	134708	BUSS BAR – GRID HEATER RELAY	1	
19	200585	RELAY – GRID HEATER, 12 VDC, 200 AMPS	1	
20	204956	RESISTOR PACK – COOLANT LEVEL	1	
21	134549	FASTENER – DOUBLE X-TREE CLIP	1	
22	134866	FASTENER – VELCRO STRAP, 400 MM	1	
23	30753	FASTENER – CABLE TIE, BLACK, 305 MM LG	4	
24	21763	FASTENER – CABLE TIE, BLACK, 160 MM LG	8	
25	136655	FASTENER – FIR TREE MOUNT W/ TIE, 200 MM LG [201]	23	
26	209754	SUPPORT – HARNESS	1	
27	134442	SPACER – DUAL SWIVEL SADDLE	1	

198. Engine harness assembly (MD #306515) is used for model year 2022 and later windrowers. Assembly includes engine harness (MD #306511) and engine extension harness (MD #160705). Refer to Section *7 Diesel Exhaust Fluid Plumbing, page 15* for extension harness (MD #207904).
199. Engine harness (MD #207903) is used for model year 2021 and prior windrowers. Was previously engine harness MD #207304, which has been superseded by engine harness MD #207903 and extension harness MD #207904. Refer to Section *7 Diesel Exhaust Fluid Plumbing, page 15* for extension harness.
200. For model year 2017 and prior windrowers, engine harness MD #207304 remains available for service only until stock is depleted. For model year 2018–2021 windrowers, order engine harness MD #207903 and extension harness MD #207904.
201. Illustration shows fastener locations.

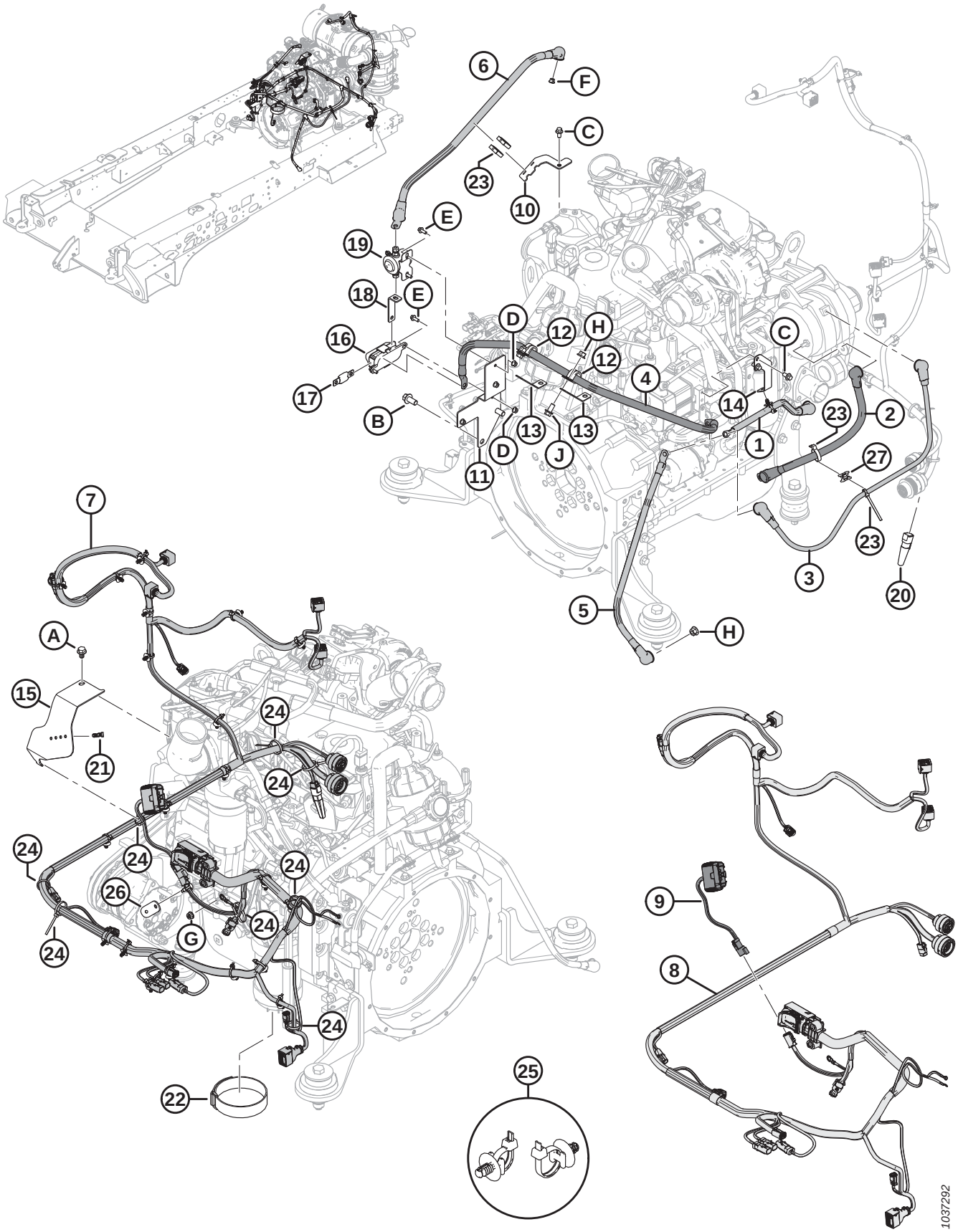
6
F
C
23
10
E
19
18
E
16
17
B
D
12
H
12
4
13
13
D
J
11
C
14
1
23
2
27
23
3
20
5
H
7
A
15
21
24
24
24
24
24
26
G
24
24
24
22
25
9
8
1037292

Ref	Part Number	Description	Qty	Serial Number
A	136151	BOLT – HEX FLG HD TFL M10 X 1.5 X 16-8.8-A3L		
B	136399	BOLT – HEX FLG HD TFL M12 X 1.75 X 25-8.8-A3L		
C	136485	BOLT – HEX FLG HD TFL M8 X 1.25 X 16-8.8-A3L		
D	152668	NUT – HEX FLG CTR LOC M6 X 1-8-A2L		
E	135959	BOLT – HEX FLG HD M6 X 1 X 16-10.9-A2L		
F	152668	NUT – HEX FLG CTR LOC M6 X 1-8-A2L		
G	135337	NUT – HEX FLG CTR LOC M8 X 1.25-8-A2L		
H	135799	NUT – HEX FLG CTR LOC M10 X 1.5-10-A3L		
J	152655	BOLT – HEX FLG HD M10 X 1.5 X 20-8.8-A3L		

103 Electrical – Firewall Modules

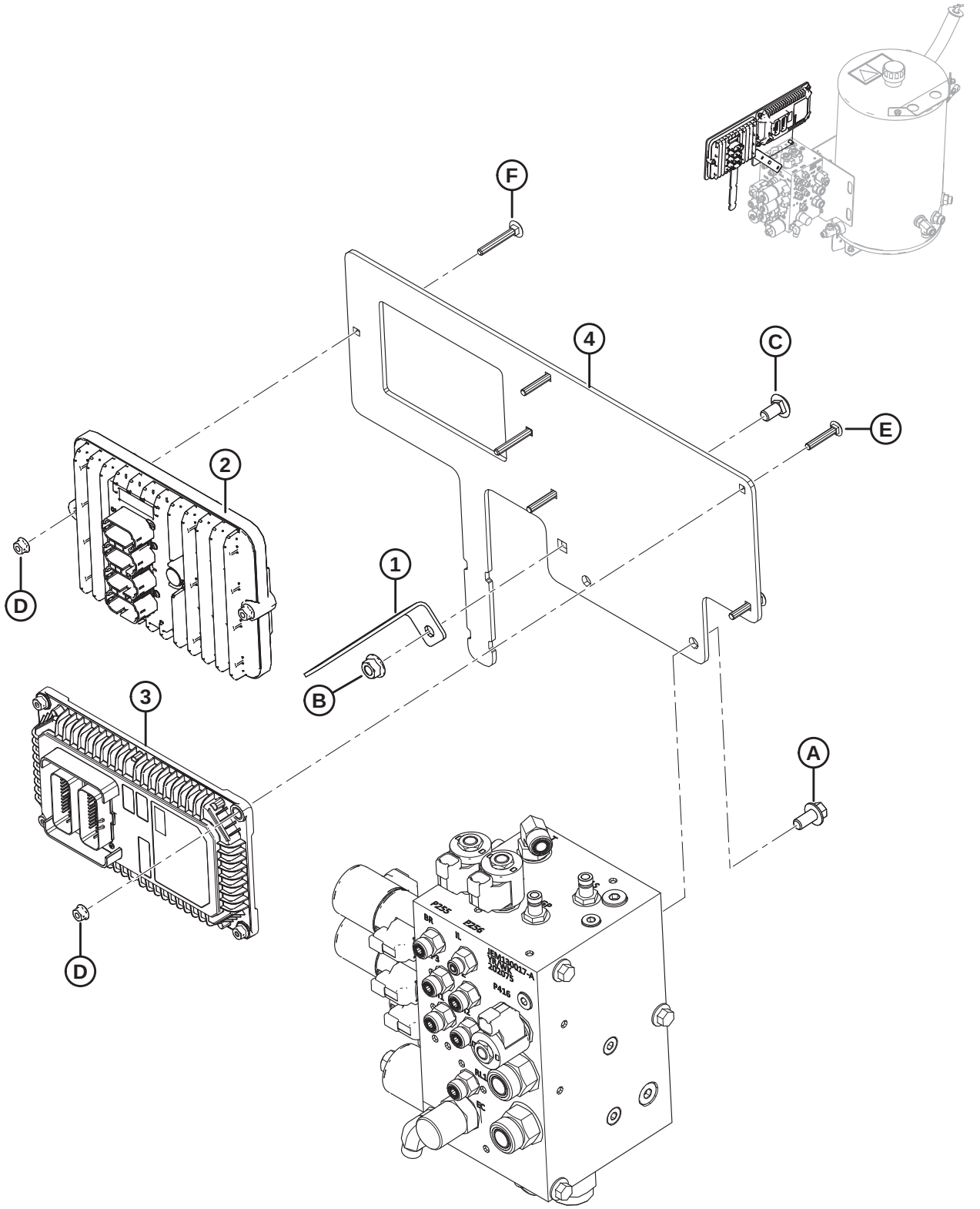

ELECTRICAL – FIREWALL MODULES

Ref	Part Number	Description	Qty	Serial Number
1	207856	SUPPORT – HARNESS	1	
2	306320	KIT – MASTER MODULE	1	
3	201396	MODULE – EXTENSION MODULE	1	
4	203204	PLATE – MODULE MOUNT	1	
A	152655	BOLT – HEX FLG HD M10 X 1.5 X 20-8.8-A3L		
B	135927	NUT – HEX SMTH FLG M10 X 1.5-8-A3L		
C	184657	BOLT – RHSSN M10 X 1.5 X 20-8.8-A3L		
D	152668	NUT – HEX FLG CTR LOC M6 X 1-8-A2L		
E	**184643**	**BOLT – RHSSN M6 X 1.0 X 35-8.8-A2L**		
F	**136731**	**BOLT – RHSN M6 X 1 X 45-8.8-AA1J**		

104 Electrical – Wheel Legs

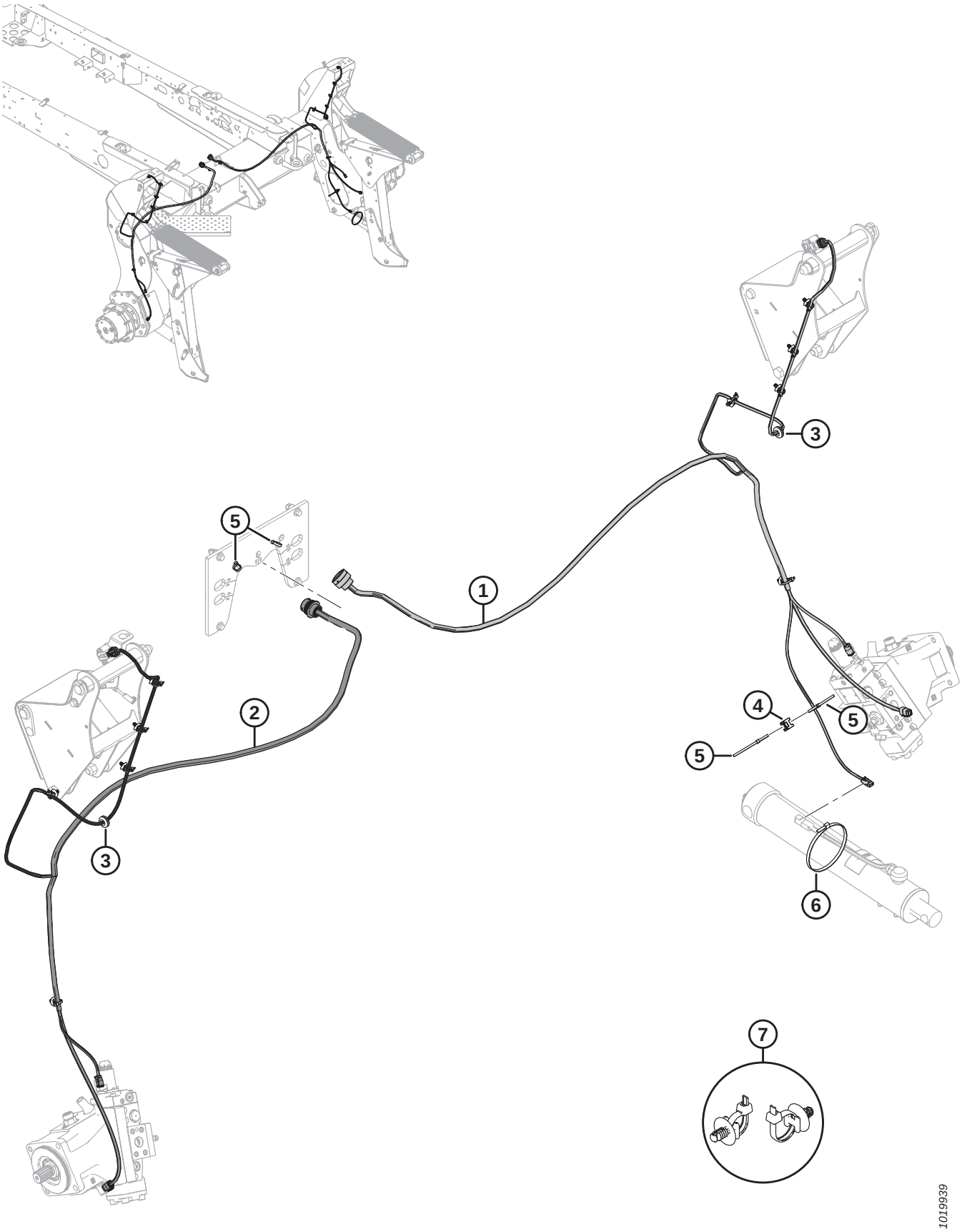

ELECTRICAL – WHEEL LEGS

Ref	Part Number	Description	Qty	Serial Number
1	207295	HARNESS – WHEEL LEG, LHS, M1-SERIES	1	
2	207296	HARNESS – WHEEL LEG, RHS, M1-SERIES	1	
3	206482	GROMMET – RUBBER	2	
4	134442	SPACER – DUAL SWIVEL SADDLE	1	
5	21763	FASTENER – CABLE TIE, BLACK, 160 MM LG	4	
6	30753	FASTENER – CABLE TIE, BLACK, 305 MM LG	1	
7	136655	FASTENER – FIR TREE MOUNT WITH CABLE TIE [202]	10	

202. Illustration shows fastener locations.

105 Decals – Safety

Ref	Part Number	Description	Qty	Serial Number
1	166234	DECAL – WARNING (TRAINING SEAT AND SEAT BELTS)		
2	166425	DECAL – DANGER		
3	166463	DECAL – TRANSPORT		
4	166837	DECAL – DANGER, FAN		
5	167502	DECAL – WARNING, PINCH HAZARD		
6	306179	DECAL – HEADER LOCK, LH		
	306180	DECAL – HEADER LOCK, RH		
7	306181	DECAL – HEADER LOCK, 2 PANEL		
8	166454	DECAL – READ MANUAL		
9	166829	DECAL – CAUTION, BALANCE		
10	166457	DECAL – WARNING, READ MANUAL, STEERING SERVICE		
11	166832	DECAL – HIGH PRESSURE FLUID		
12	166834	DECAL – WARNING, STARTER JUMP		
13	166835	DECAL – WARNING, BATT. EXPLODE		
14	166836	DECAL – WARNING, BATTERY BURN		
15	166838	DECAL – WARNING HOT SURFACE		
16	**306756**	**DECAL – NITRITE FREE** [203]		**421190–**
17	166824	DECAL – FILL RATE [204]		**–421189**
18	166839	DECAL – WARNING, BELT		
19	166843	DECAL – STEERING CONTROL		

203. For model year 2022 and later windrowers.
204. For model year 2021 and prior windrowers.

106 Decals – Information and Reflectors

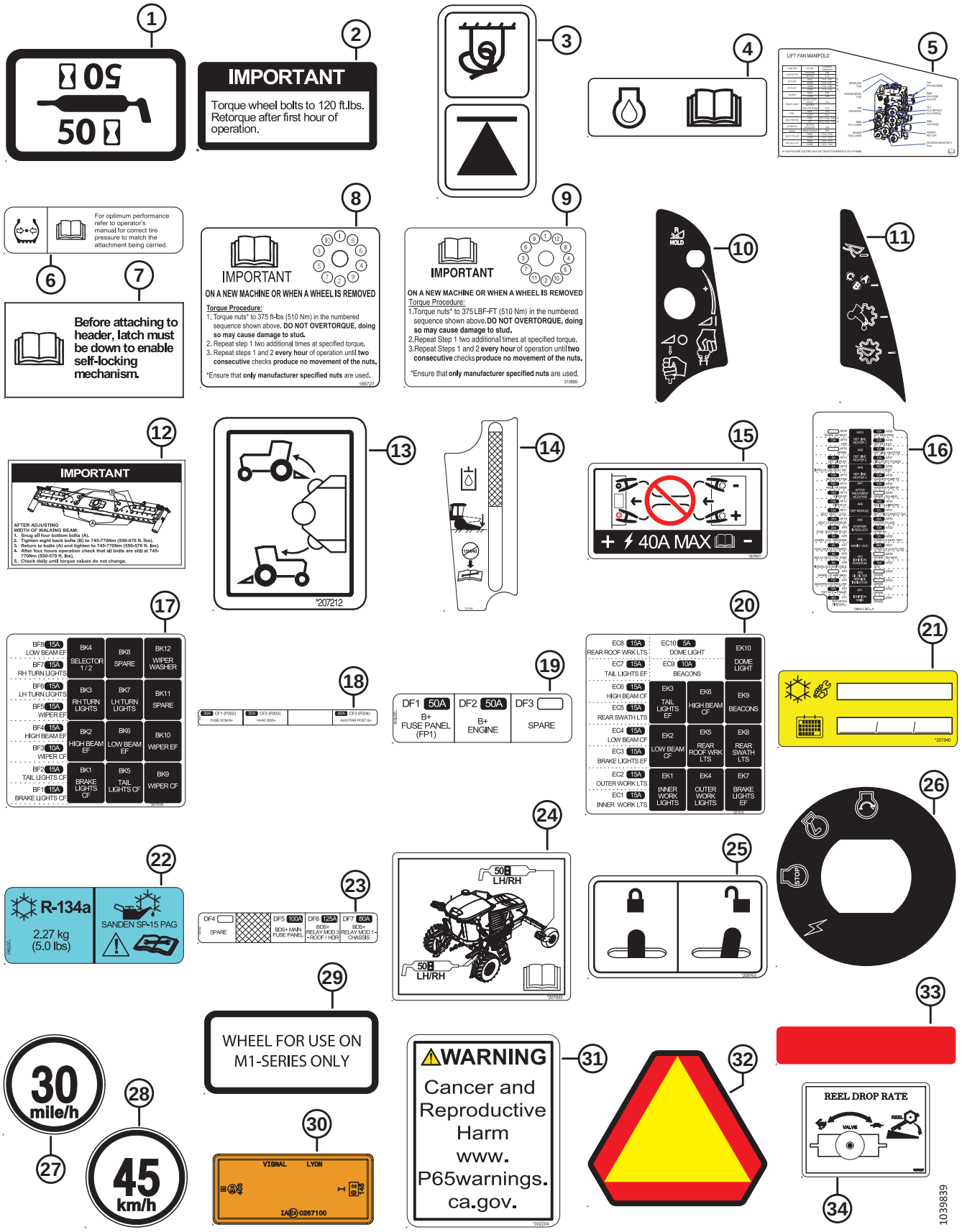

DECALS – INFORMATION AND REFLECTORS

Ref	Part Number	Description	Qty	Serial Number
1	23165	DECAL – 50 HR LUBE		
2	101375	DECAL – WHEEL BOLTS (CASTER WHEELS ONLY)		
3	252561	DECAL – TIE DOWN AND 'JACK HERE'		
4	110988	DECAL – ENGINE OIL		
5	306365	DECAL – LIFT MANIFOLD		
6	111221	DECAL – TIRE PRESSURE		
7	139723	DECAL – LATCH HANDLE		
8	166727	DECAL – BOLT TORQUE		
9	310689	DECAL – 12 BOLT TORQUE		
10	206778	DECAL – HEADER SWITCH		
11	206781	DECAL – FUNCTION SWITCHES		
12	207087	DECAL – IMPORTANT, WALKING BEAM BOLTS		
13	207212	DECAL – WASHER PUMP		
14	207248	DECAL – LEVEL		
15	207601	DECAL – AUX POWER		
16	306417	DECAL – FUSE, MAIN, ENGLISH, TAPE [205]		
17	207816	DECAL – FUSE, RELAY MODULE CHASSIS		
18	291465	DECAL – FUSE, ATO GROUP (2018–LATER)		321190–
	291203	DECAL – FUSE, ATO GROUP (2016–2017)		–321189
	207817	DECAL – FUSE, ATO GROUP (SERVICE ONLY)		
19	207818	DECAL – FUSE, AMI GROUP, UPPER		
20	207819	DECAL – FUSE, RELAY MODULE ROOF		
21	207840	DECAL – A/C SERVICE		
22	306118	DECAL – A/C INFO [206]		346190–
	207841	DECAL – A/C INFO [207]		–346189
23	291378	DECAL – FUSE, AMI GROUP, LOWER		
24	207933	DECAL – LUBRICATION		
25	208763	DECAL – LATCH, HOOD		
26	208807	DECAL – KEY SWITCH		
27	208900	DECAL – SIS, 30 MILE/H		
28	291028	DECAL – SIS, 45 KM/H		
29	291411	DECAL – M1 SERIES ONLY		
30	**346208**	**REFLECTOR – AMBER, ADHESIVE**		
31	302204	DECAL – CA PROPOSITION 65		
32	135378	REFLECTOR – SMV		
33	115145	REFLECTOR – FLUORESCENT RED-ORANGE		
	115146	REFLECTOR – AMBER		
	115147	REFLECTOR – RED		
34	**167897**	**DECAL – REEL DROP RATE**		

205. Includes main fuse panel decal and double-sided tape.
206. For model year 2019 and later.
207. For model year 2018 and prior.

107 Decals – Product Identification

Ref	Part Number	Description	Qty	Serial Number
1	163298	DECAL – FRONT CAB, MACDON		
2	208876	DECAL – HOOD, MACDON		
3	208034	PANEL – MACDON, S.S.		
4	208877	DECAL – HOOD		
5	167727	DECAL – TRIMBLE READY		
6	208920	DECAL – ULTRA GLIDE AND DUAL DIRECTION		
7	209770	DECAL – CROSSFLEX		
8	141513	DECAL – LOGO (70TH ANNIVERSARY) [208]		346190–371189
	141510	ASSEMBLY – DECAL [209]		346190–371189

208. For model year 2019.
209. For model year 2019. Includes logo decal (MD #141513) and black metal mounting plate.

108 (Option) Bluetooth Software Interface Module

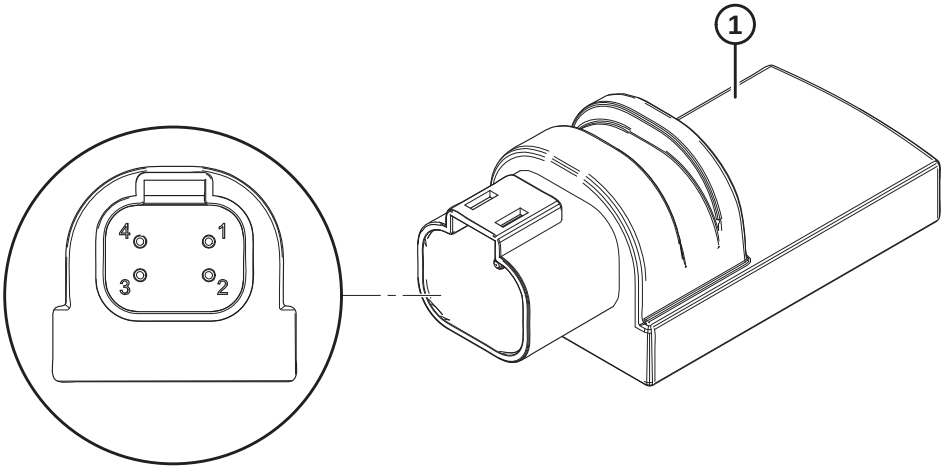

1022919

(OPTION) BLUETOOTH SOFTWARE INTERFACE MODULE

Ref	Part Number	Description	Qty	Serial Number
1	208845	KIT – BLUETOOTH SOFTWARE INTERFACE MODULE [210]		

210. Used for performing software updates on the master controller via Android or IOS based IQANgo App. Kit includes bluetooth module and instructions.

109 (Option) Center-Link Self-Alignment

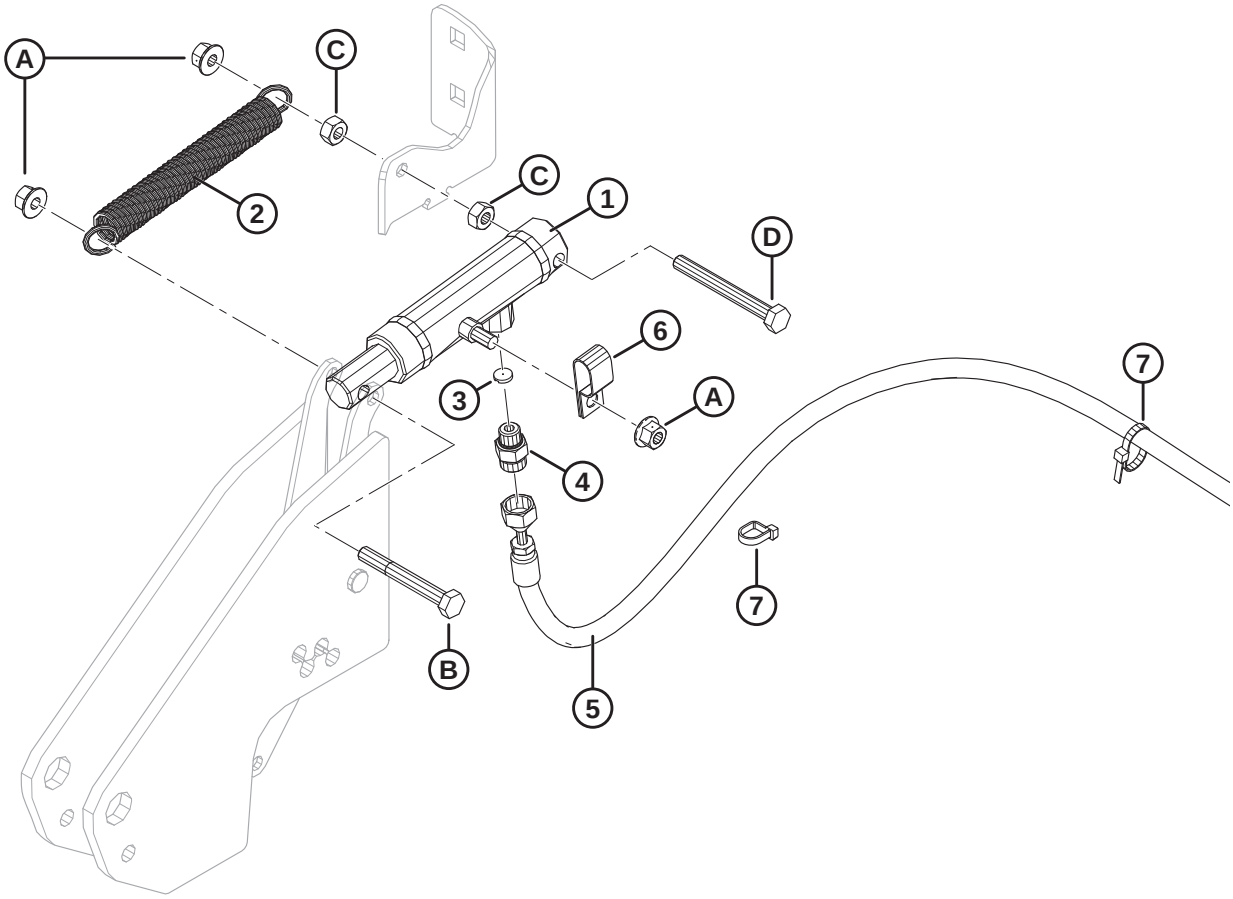

1015904

(OPTION) CENTER-LINK SELF-ALIGNMENT

Ref	Part Number	Description	Qty	Serial Number
	B6617	KIT – CENTER-LINK SELF-ALIGNMENT [211]		
1	252934	CYLINDER – HYDRAULIC	1	
	252940	SEAL KIT		
2	110977	SPRING – EXT	1	
3	111834	RESTRICTOR	1	
4	135778	FITTING – ADAPTER	1	
	50219	O-RING – #6 ORB		
	135865	O-RING – #6 ORFS		
5	203972	HOSE – HYDRAULIC, 1/4 IN I.D., 1050 MM LG	1	
6	135234	CLAMP – DOUBLE HOSE INSULATED	1	
7	21763	FASTENER – CABLE TIE, BLACK, 160 MM LG	2	
A	135799	NUT – HEX FLG CTR LOC M10 X 1.5-10-A3L		
B	108172	BOLT – HEX HD M10 X 1.5 X 65-8.8-A3L		
C	30505	NUT – HEX M10 X 1.5-10-A3L		
D	136454	BOLT – HEX HD TFL M10 X 1.5 X 90-8.8-A3L		

211. Kits are available through Whole Goods only.

110 (Option) Coolant Heater Kit

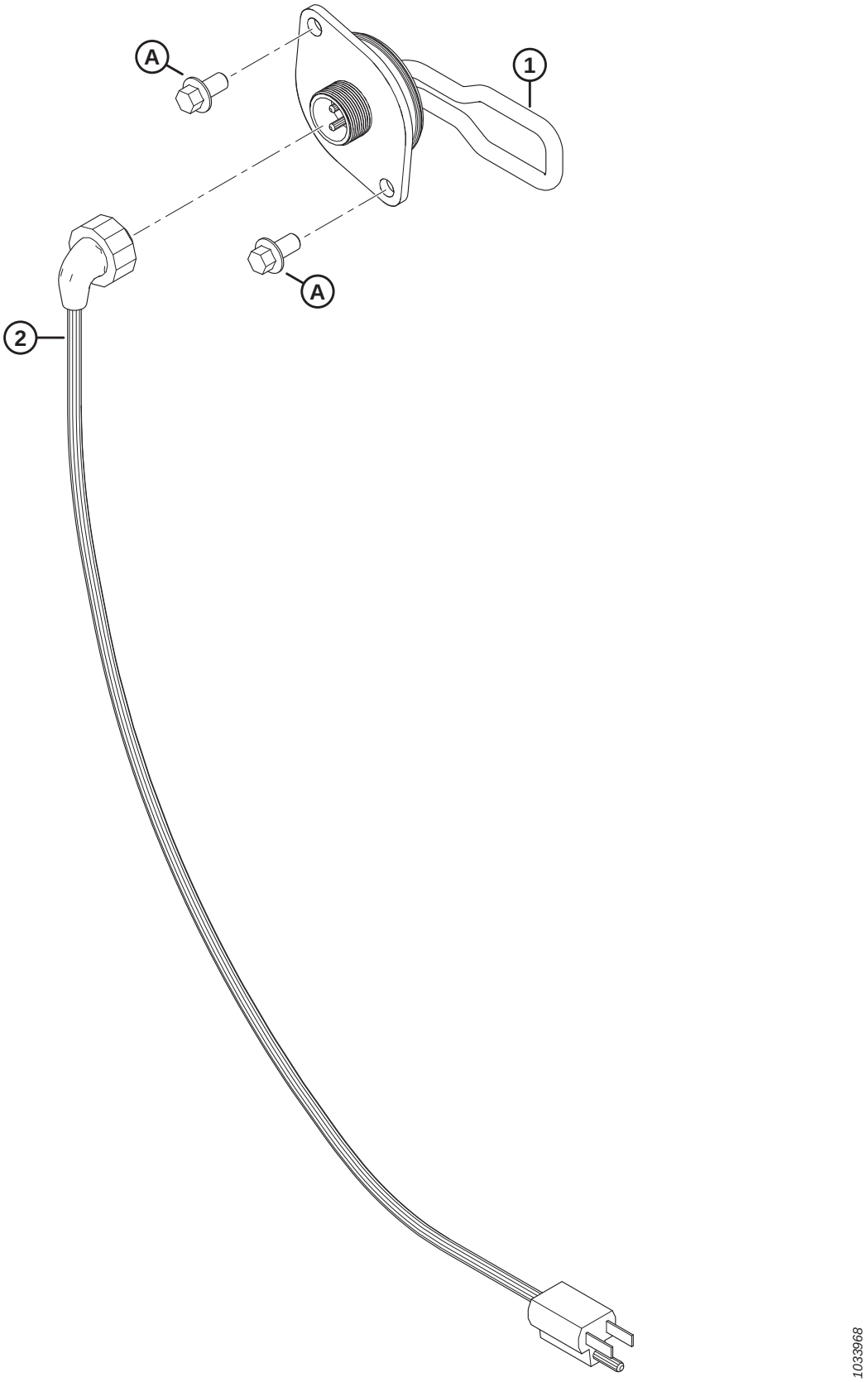

(OPTION) COOLANT HEATER KIT

Ref	Part Number	Description	Qty	Serial Number
	306351	KIT – COOLANT HTR 4 CYL [212]		
	B6979	KIT – COOLANT HTR 4 CYL [213]		
1	306346	HEATER – COOLANT 4 CYL	1	
2	306347	CABLE – COOLER HTR 4 CYL	1	
A	136485	BOLT – HEX FLG HD TFL M8 X 1.25 X 16-8.8-AA1J		

212. The kit is compatible with 4-cylinder Cummins engine. The kit provides improved cold weather starting capability. The kit includes all listed parts and instructions.
213. Kits are available through Whole Goods only.

111 (Option) Counterweights – Rear Ballast

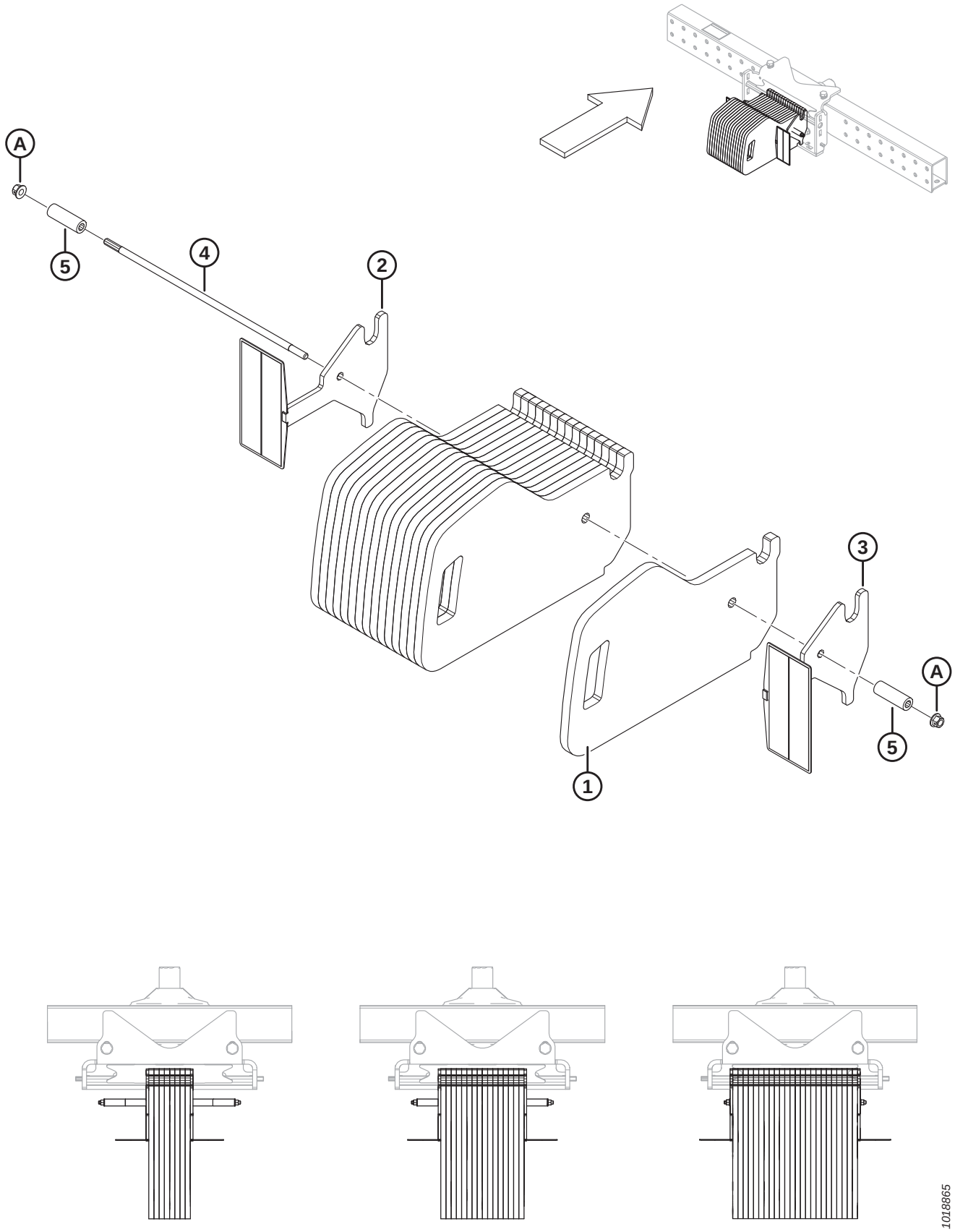

(OPTION) COUNTERWEIGHTS – REAR BALLAST

Ref	Part Number	Description	Qty	Serial Number
	B6053	KIT – COUNTERWEIGHTS, FIRST BUNDLE [214]		
	B6054	KIT – COUNTERWEIGHTS, ADDITIONAL BUNDLE [215]		
1	208268	WEIGHT – BLACK	8-24	
2	209836	BRACKET – WEIGHT, REFLECTOR, LH	1	
	115145	REFLECTOR – FLUORESCENT RED-ORANGE	1	
	115147	REFLECTOR – RED	1	
3	209837	BRACKET – WEIGHT, REFLECTOR, RH	1	
	115145	REFLECTOR – FLUORESCENT RED-ORANGE	1	
	115147	REFLECTOR – RED	1	
4	204443	ROD – CLAMP	1	
5	149168	SPACER	2-4	
A	136431	NUT – HEX FLG CTR LOC M12 X 1.75-10-A3L		

214. Includes eight counterweights (MD #208268), reflector weight brackets (MD #209836, 209837), one rod clamp (MD #204443), four spacers (MD #149168), and two nuts (MD #136431). Kits are available through Whole Goods only.
215. Includes eight counterweights (MD #208268) only. One, two, or three sets may be installed. Each set is 163 kg (360 lb.), and the total weight that can be installed is 490 kg (1080 lb.). Kits are available through Whole Goods only.

112 (Option) DWA Shut-Off Kit

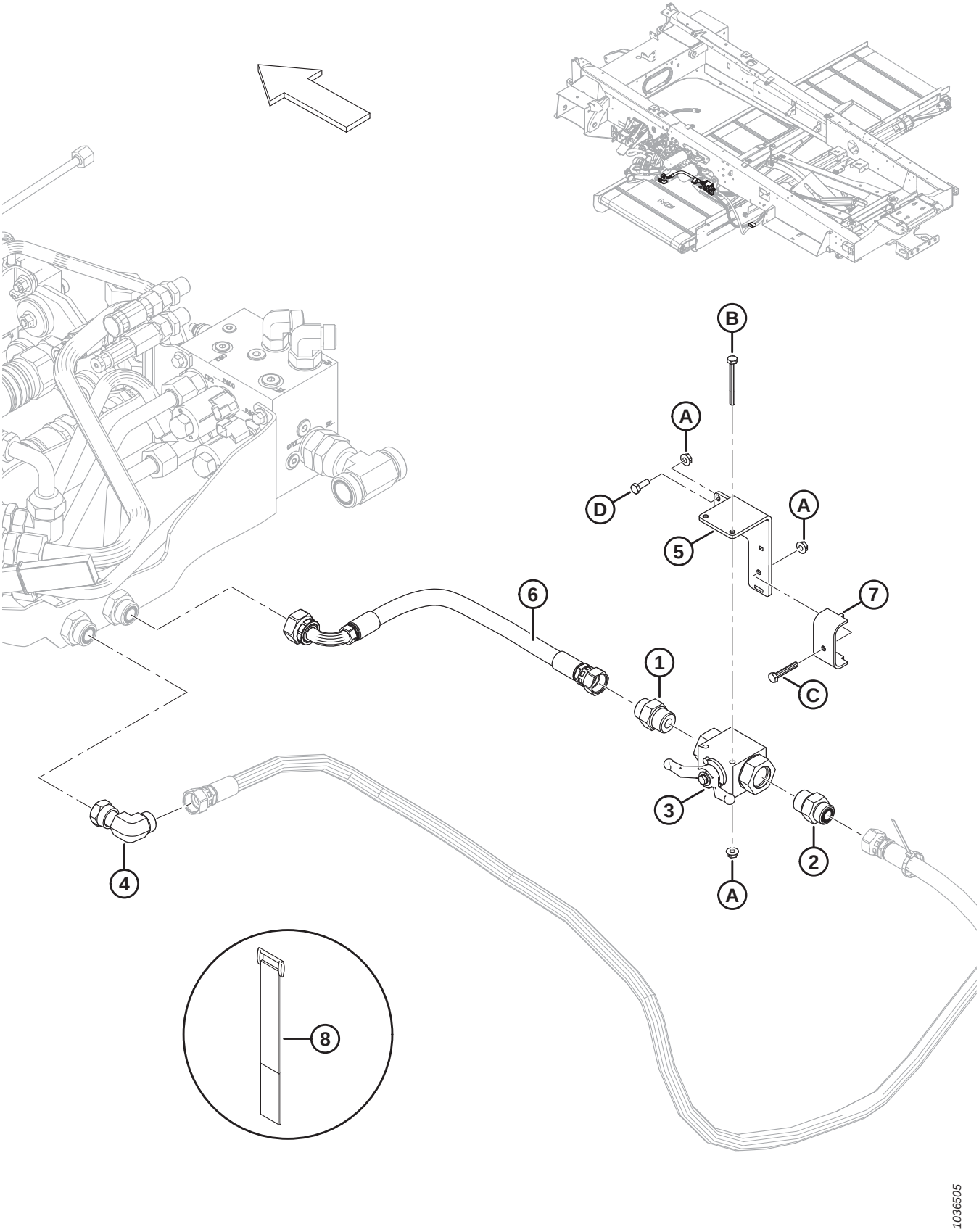

(OPTION) DWA SHUT-OFF KIT

Ref	Part Number	Description	Qty	Serial Number
	B9020	KIT – M1 DWA SHUT-OFF [216]		
1	135786	FITTING – ADAPTER	1	
	30971	O-RING – #12 ORB		
	135867	O-RING – #10 ORFS		
2	135786	FITTING – ADAPTER (2019 AND PRIOR DWA) [217]	1	–371189
	30971	O-RING – #12 ORB		
	135867	O-RING – #10 ORFS		
	135788	FITTING – ADAPTER (2020 AND LATER DWA) [218]	1	371190–
	30971	O-RING – #12 ORB		
	135868	O-RING – #12 ORFS		
3	294263	VALVE – BALL	1	
4	136846	FITTING – SWIVEL 90 DEG HYD 10-10	1	
5	299820	BRACKET – BV MOUNT, DWA	1	
6	299822	HOSE – HYD, 100R17, 0.5 IN. DIA, 430 MM LG	1	
7	299898	HOLDER – HOSES	1	
8	135444	FASTENER – CINCH STRAP 6 IN. LG	2	
A	135248	NUT – HEX FLG CTR LOC	5	
B	21854	BOLT – HEX HD 1/4 NC X 2.5 LG GR 5 ZP	2	
C	21574	BOLT – HEX HD 1/4 NC X 1.5 LG GR 5 ZP	1	
D	21566	BOLT – HEX HD 1/4 NC X 0.75 LG GR 5 ZP	2	

216. Kit includes all listed parts and instructions. Kits are available through Whole Goods only.
217. Service part for model year 2019 and prior Double Windrow Attachment (DWA).
218. Service part for model year 2020 and later Double Windrow Attachment (DWA).

113 (Option) Float Booster Spring

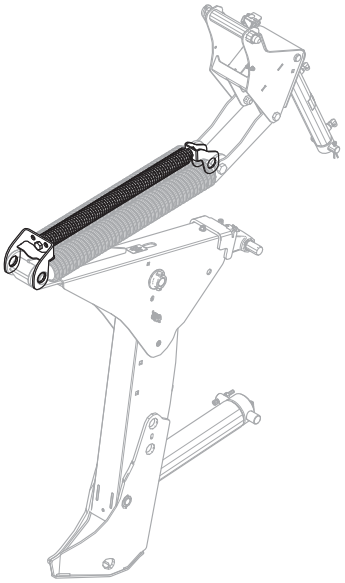

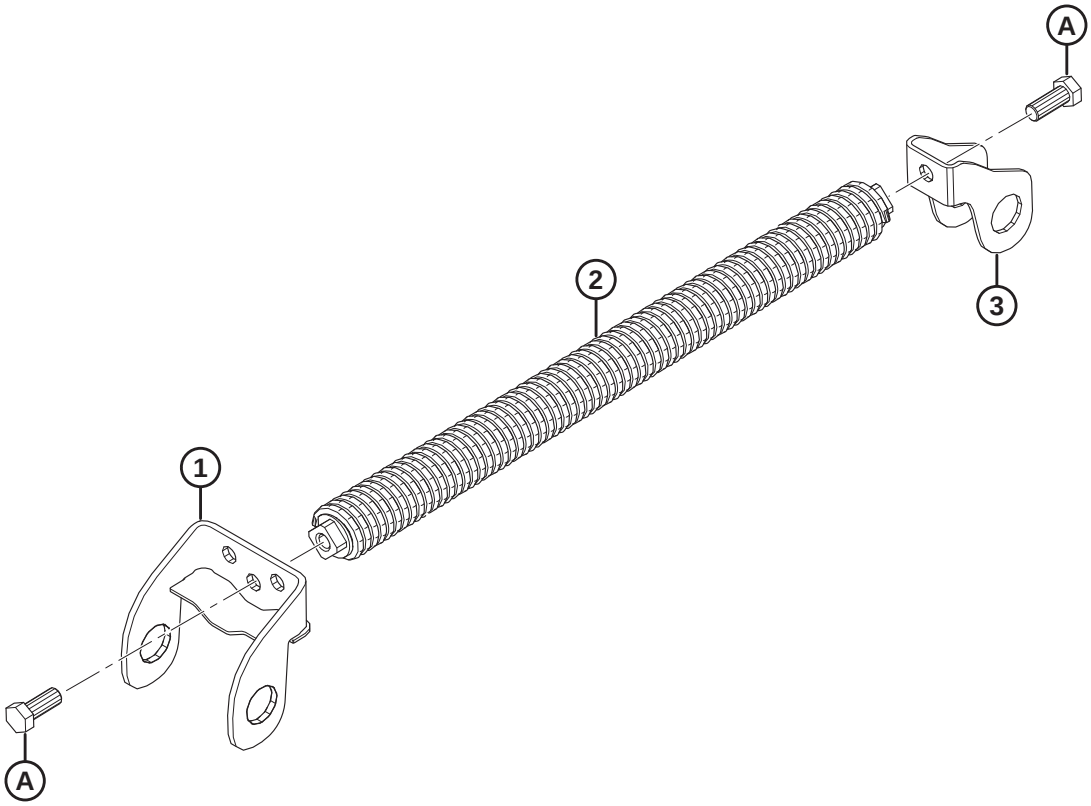

1015910

(OPTION) FLOAT BOOSTER SPRING

Ref	Part Number	Description	Qty	Serial Number
	B6047	KIT – FLOAT BOOSTER SPRING [219]		
1	206065	SUPPORT – SPRING, FRONT WELDT	2	
2	306122	ASSEMBLY – BOOSTER SPRING W/ INSERTS	2	
3	206447	CHANNEL – BOOSTER SPRING	2	
A	111528	BOLT – HEX HD TFL M16 X 2 X 40-8.8-A3L		

219. Kits are available through Whole Goods only.

114 (Option) Float Booster Spring Doubler

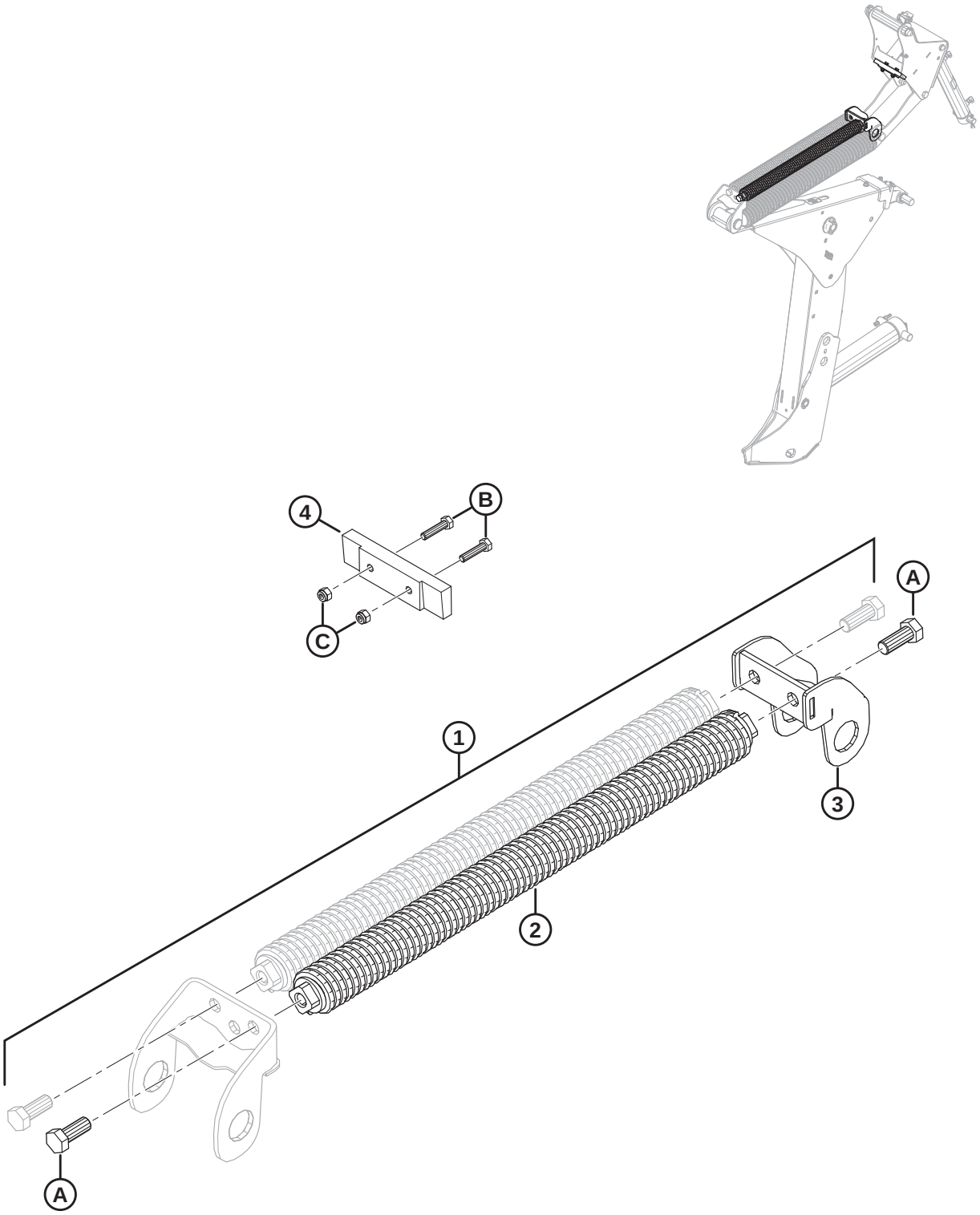

1033663

(OPTION) FLOAT BOOSTER SPRING DOUBLER

Ref	Part Number	Description	Qty	Serial Number
	B6106	KIT – FLOAT BOOSTER SPRING DOUBLER [220]		
1	REF	KIT – FLOAT BOOSTER SPRING [221]		
2	306122	ASSEMBLY – BOOSTER SPRING W/ INSERTS	2	
3	206424	SUPPORT – SPRING, REAR WELDT	2	
4	206432	PLATE – LINK STOPPER	2	
A	111528	BOLT – HEX HD TFL M16 X 2 X 40-8.8-A3L		
B	184654	BOLT – HEX HD M8 X 1.25 X 35-8.8-A2L		
C	184688	NUT – HEX NYLOC M8 X 1.25-8-A2L		

220. The kit is used in addition to auxillary suspension spring kit (MD #B6047) to add on a second booster spring. Kits are available through Whole Goods only.
221. Greyed out parts are included in auxillary suspension spring kit (MD #B6047). For service parts, refer to Section *113 (Option) Float Booster Spring, page 257*.

115 (Option) High Debris Cooler Intake

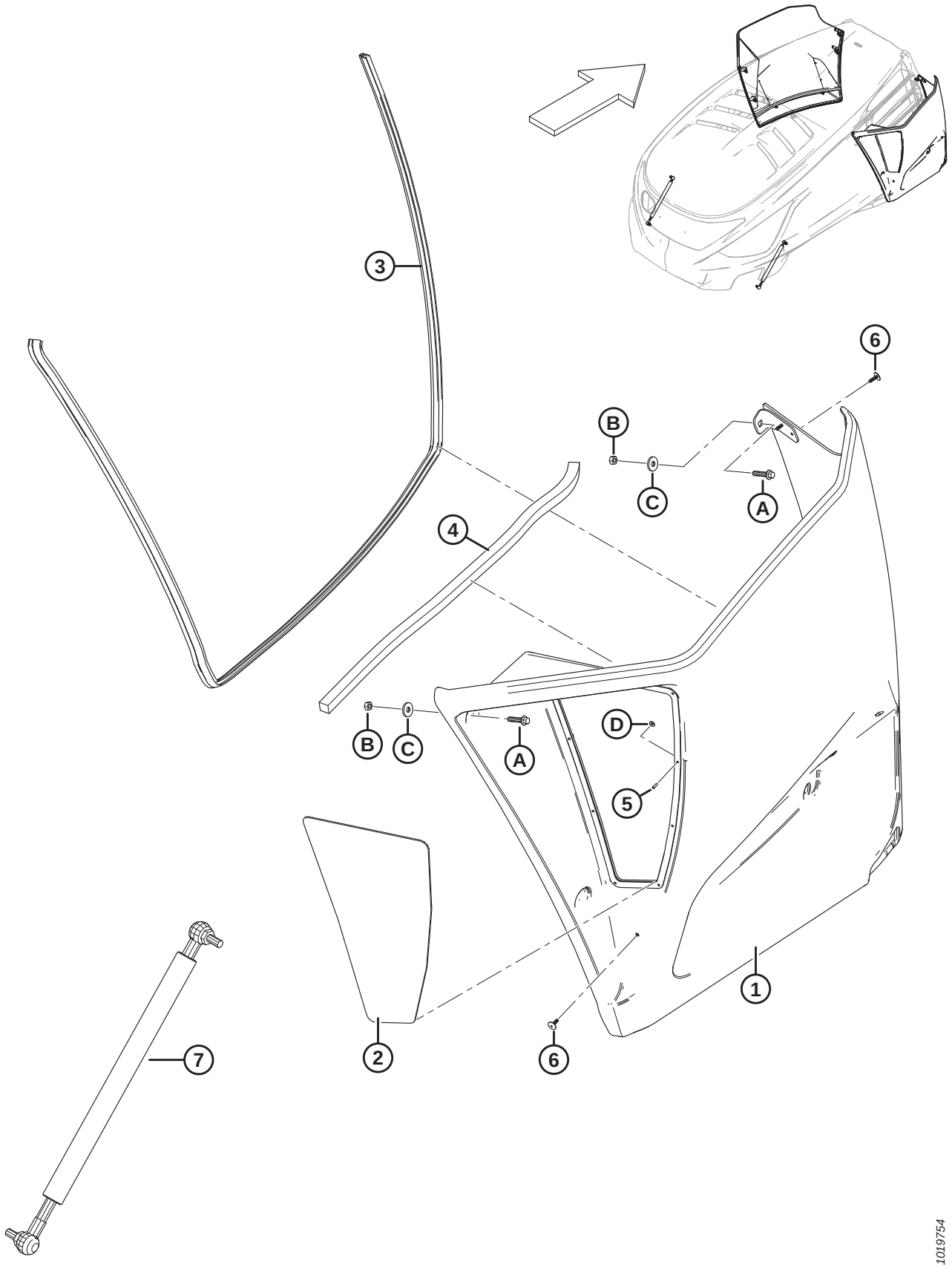

(OPTION) HIGH DEBRIS COOLER INTAKE

Ref	Part Number	Description	Qty	Serial Number
	B6055	KIT – HIGH DEBRIS COOLER INTAKE [222]		
1	291629	ASSEMBLY – AIR DUCT W/ GLASS, LH [223]	1	
	291630	ASSEMBLY – AIR DUCT W/ GLASS, RH [224]	1	
2	208397	WINDOW – GLASS, LH	1	
	208406	WINDOW – GLASS, RH	1	
3	208372	SEAL – BULB	2	
4	206863	SEAL – FOAM, 905 MM LG	2	
5	184613	RIVET – POP, 1/8 IN	18	
6	136536	RIVET – BLIND 3/16 IN X 0.5 IN, BLACK	20	
7	209689	CYLINDER – GAS, HOOD	2	
A	252396	BOLT – HEX FLG HD TFL M8 X 1.25 X 35-SS-BO		
B	184687	NUT – HEX M8 X 1.25-8-A2L		
C	208337	WASHER – RUBBER		
D	209584	WASHER – FLAT 0.125 IN. I.D. X 0.375 IN. O.D. ZP		

222. Kits are available through Whole Goods only.
223. Includes left window glass (MD #208397).
224. Includes right window glass (MD #208406).

116 (Option) Neutral Setting Service Kit

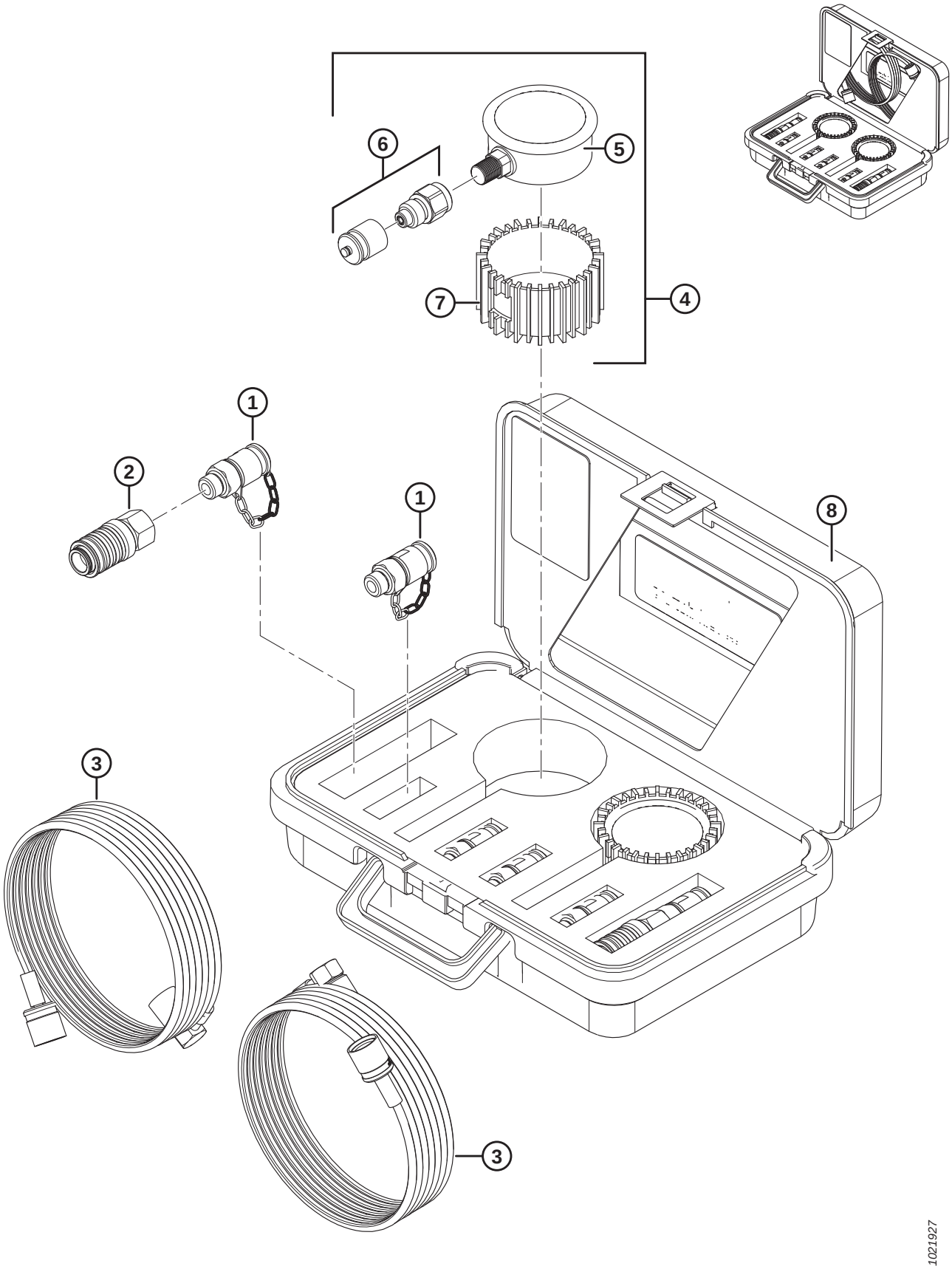

(OPTION) NEUTRAL SETTING SERVICE KIT

Ref	Part Number	Description	Qty	Serial Number
	183709	KIT – SERVICE, NEUTRAL SETTING [225]		
1	183525	FITTING – COUPLING HYD, M16 X 2	6	
2	252705	FITTING – COUPLING HYD	2	
3	183707	HOSE – HYD, DIAGNOSTIC	2	
4	183609	ASSY – GAUGE C/W FITTING AND BOOT [226]	2	
5	NSS	GAUGE – PRESSURE, 1000 PSI [227]	2	
6	183607	FITTING – ADAPTER C/W DUST CAP	2	
7	183608	BOOT – GAUGE PROTECTOR	2	
8	183708	CASE – CARRYING C/W FOAM, DECALS	1	

225. Includes all listed parts.
226. Includes pressure gauge (not sold separately), adapter fitting (MD #183607), and boot (MD #183608).
227. Not sold separately, service with gauge assembly (MD #183609).

117 (Option) Quick Couplers

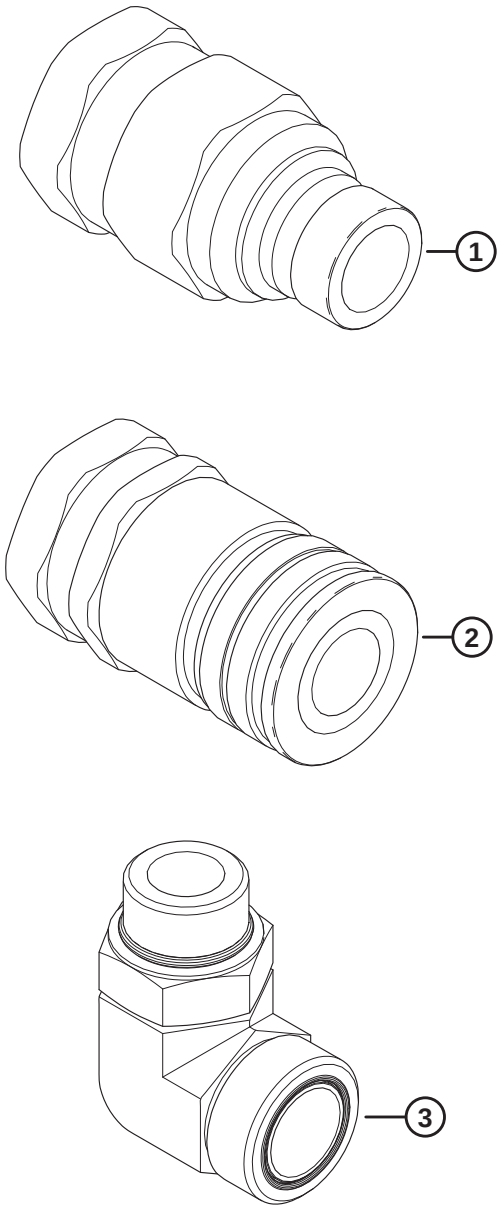

1019974

(OPTION) QUICK COUPLERS

NOTE:

Kit allows for fast connect and disconnect of hydraulic hoses between an R1 Series Disc Header and an M1170 Windrower. When converting a windrower configured with hard plumbed connections for an R1 Series Disc Header, two coupler kits (MD #B6277) are required.

Ref	Part Number	Description	Qty	Serial Number
	B6277	KIT – ROTARY QUICK COUPLER [228]		
1	136412	FITTING – COUPLING MALE, 1 IN.	1	
2	136413	FITTING – COUPLING FEMALE, 1 IN.	1	
3	136631	FITTING – ELBOW 90° HYDRAULIC	2	
	50220	O-RING – #16 ORB		
	135869	O-RING – #20 ORF		

228. The kit includes all listed parts and instructions. Kits are available through Whole Goods only.

118 (Option) Reel Drop Rate Adjustment

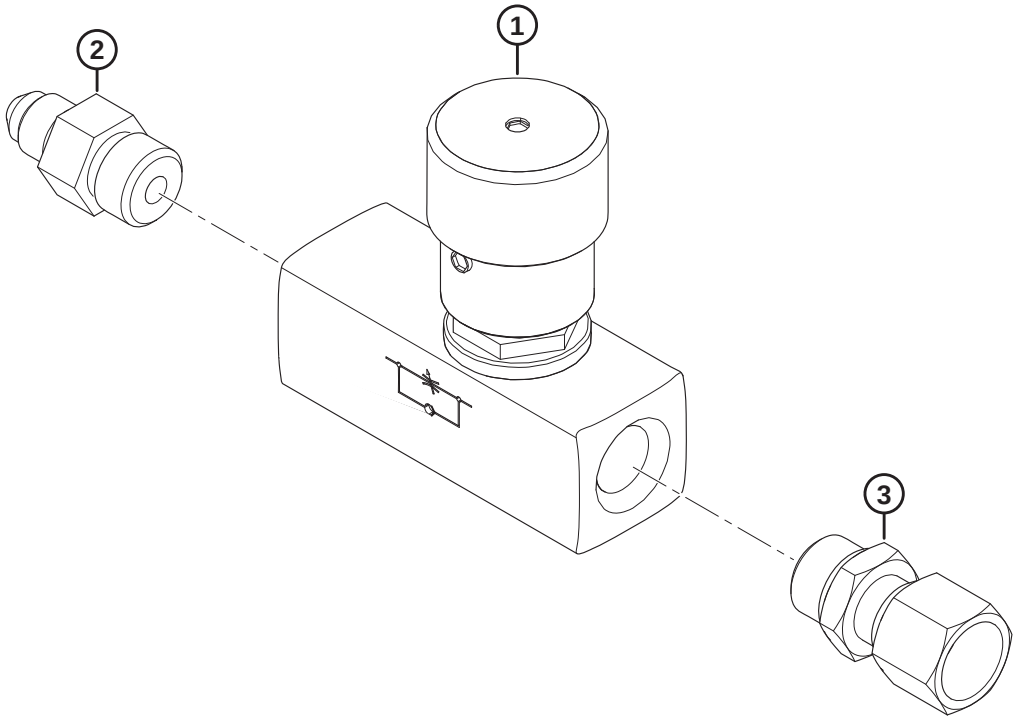

1034781

(OPTION) REEL DROP RATE ADJUSTMENT

NOTE:

Kit is used to add flow control to reel lift circuit of D1X and D1XL headers (featuring Hydraulic Hose Management System).

Ref	Part Number	Description	Qty	Serial Number
	306410	KIT – D1X, XL REEL DROP RATE ADJUSTMENT [229]		
1	183211	VALVE – HYD, FLOW CONTROL	1	
2	30524	FITTING – ADAPTER HYD	1	
3	135015	FITTING – ADAPTER HYD	1	
	167897	**DECAL – REEL DROP RATE** [230]	**1**	

229. Kit comes complete with all listed parts and instructions.
230. Refer to Section *106 Decals – Information and Reflectors, page 243*.

119 (Option) Service Filters Kit

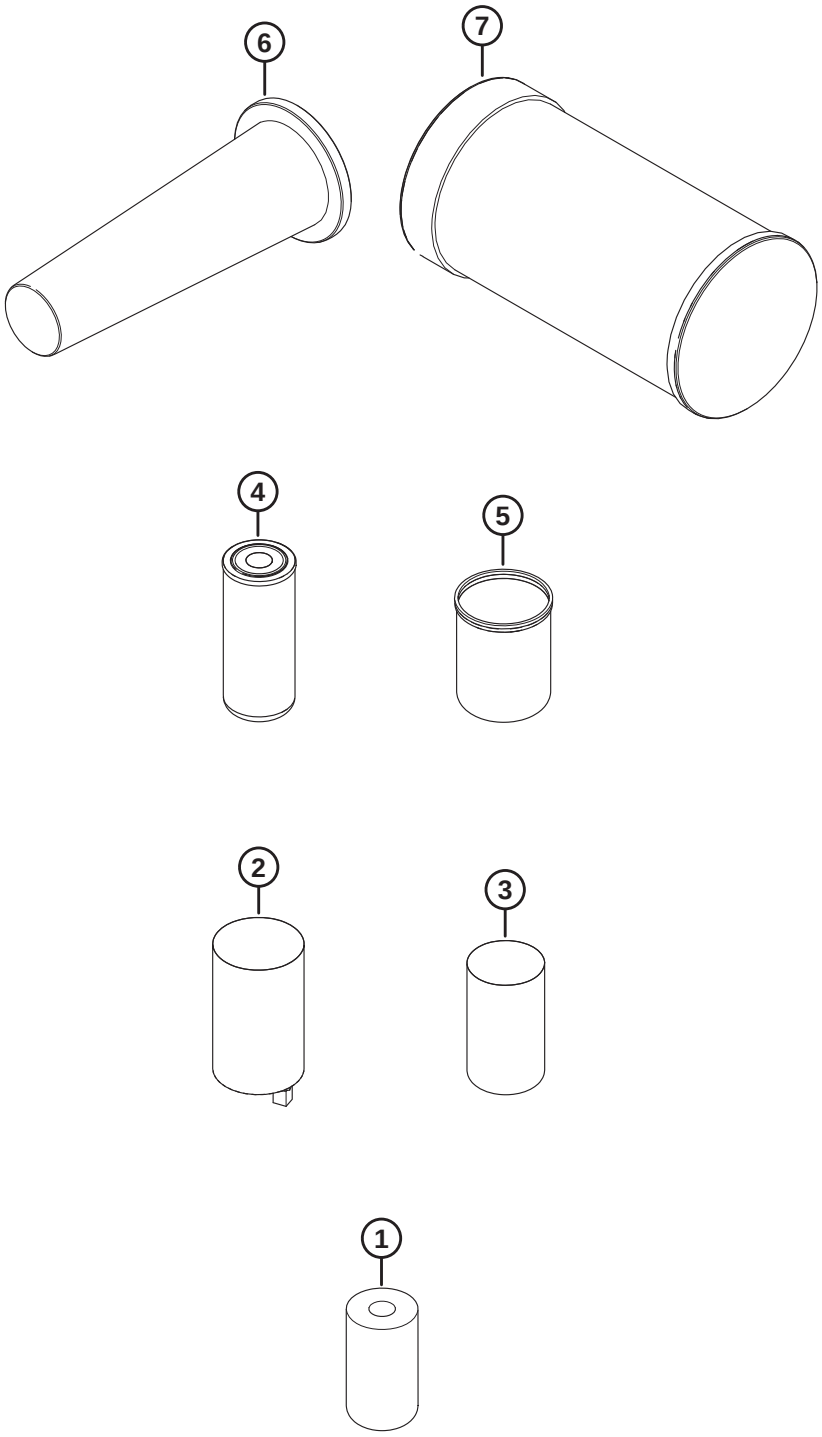

1019652

(OPTION) SERVICE FILTERS KIT

Ref	Part Number	Description	Qty	Serial Number
	208961	KIT – SERVICE FILTERS [231]		
1	111974	FILTER – OIL	1	
2	205028	FILTER – FUEL, PRIMARY	1	
3	205029	FILTER – FUEL, SECONDARY	1	
4	201713	ELEMENT – FILTER, HYDRAULIC	1	
5	320360	FILTER – HYD C/W 2X SEALS [232]	1	
6	111955	FILTER – AIR, SECONDARY	1	
7	111954	FILTER – AIR PRIMARY	1	

231. Kit includes all listed filters.
232. Includes hydraulic filter element (NSS), O-Ring (NSS), and instructions.

120 (Option) Trimble® Autopilot™ – Electrical and Display Mount (2018 and Prior)

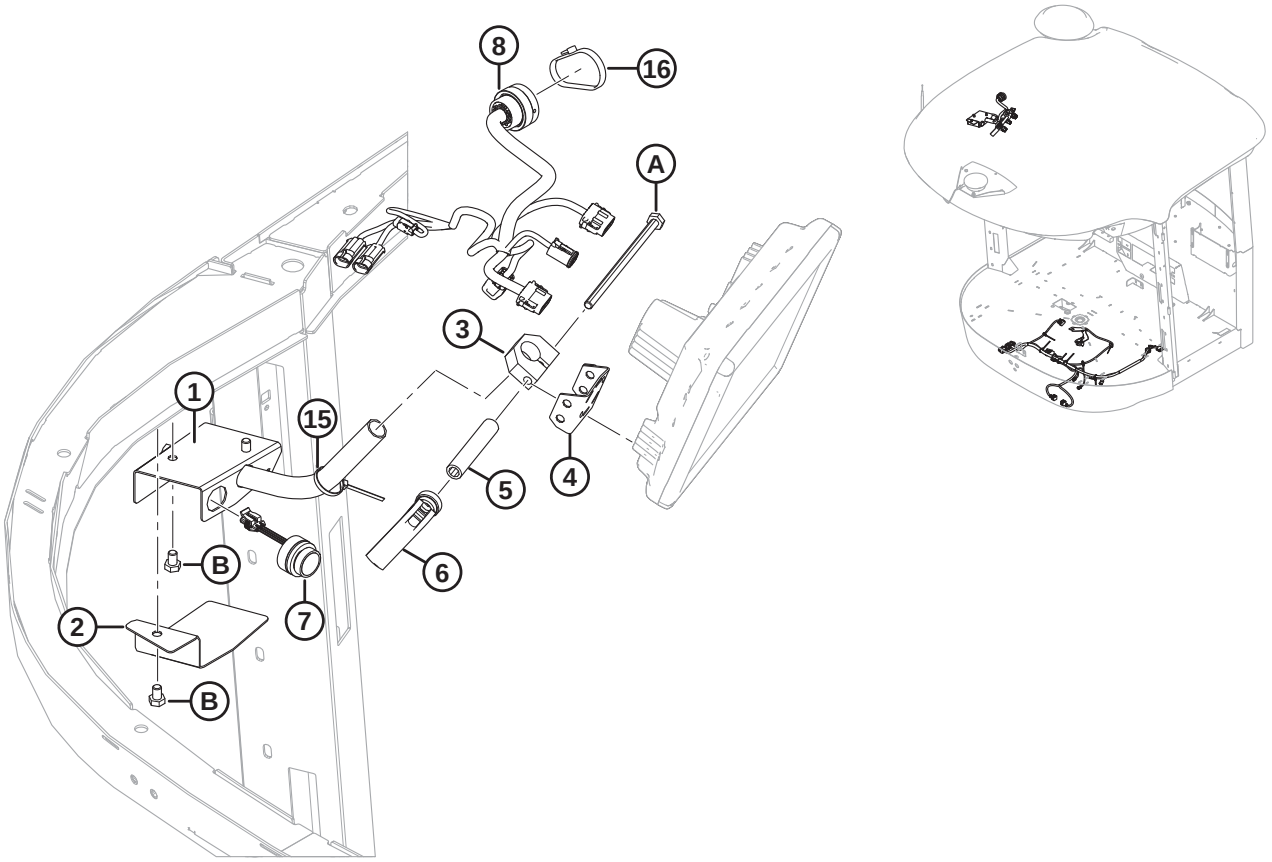

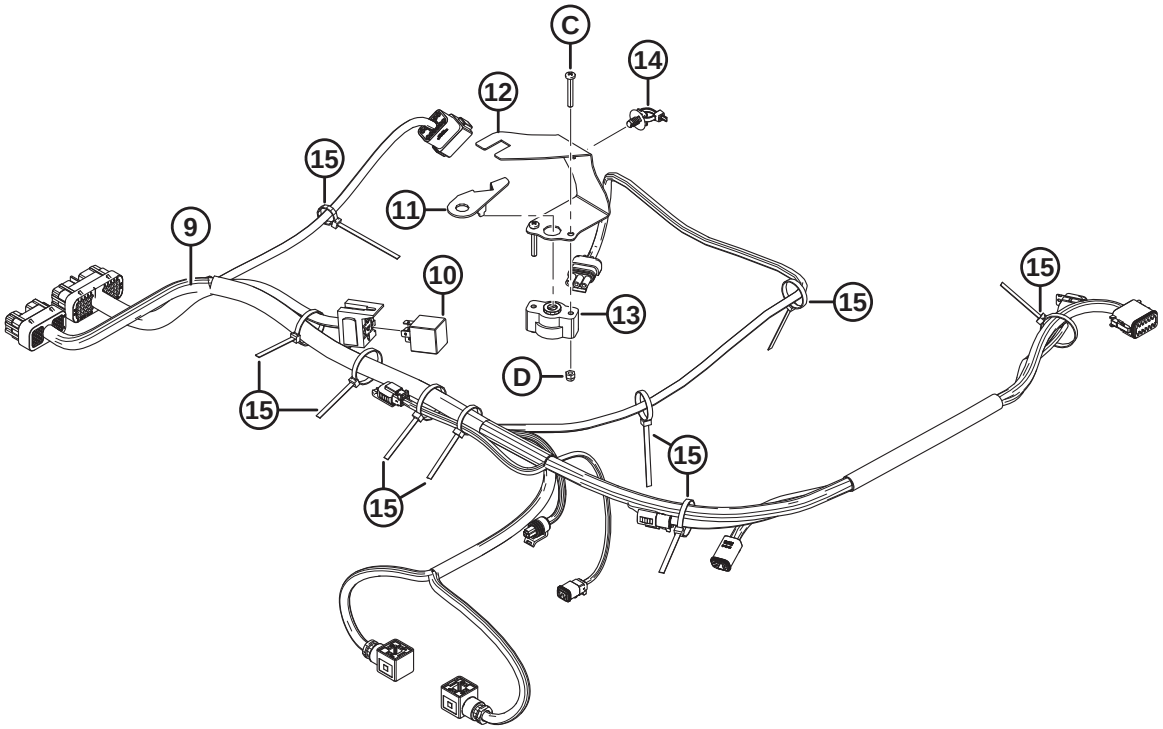

NOTE:

Trimble® Autopilot™ Ready kit MD #B5995 has been replaced by MD #B6601 for model year 2019–2022 and by MD #B9032 for model year 2023 and later. Model year 2016–2018 windrowers are still serviced by kit MD #B5995. For model year 2019–2022 windrowers, refer to Section *122 (Option) Trimble® Autopilot™ – Electrical (2019–2022), page 277*. For model year 2023 and later windrowers, refer to Section *123 (Option) Trimble® Autopilot™ – Electrical (2023), page 279*.

Ref	Part Number	Description	Qty	Serial Number
	B5995	KIT – TRIMBLE AUTOPILOT READY [233]		–346189
1	205592	SUPPORT WELDT GPS DISPLAY	1	–346189
2	206451	COVER – GPS SUPPORT	1	–346189
3	205600	CLAMP – GPS DISPLAY	1	–346189
4	205595	SUPPORT WELDT GPS DISPLAY	1	–346189
5	205598	SPACER – GPS DISPLAY	1	–346189
6	136696	LEVER	1	–346189
7	183316	BUZZER – SONALERT	1	–346189
8	209411	HARNESS – ADAPTER, TRIMBLE DISPLAY	1	–346189
9	207957	HARNESS – AUTOSTEER, TRIMBLE, GPS	1	–346189
10	30215	RELAY – MINI, 12VDC	1	–346189
11	208637	ADAPTER – STEERING SENSOR	1	–346189
12	208895	SUPPORT – SENSOR, STEERING	1	–346189
13	208894	SENSOR – ROTARY POSITION	1	–346189
14	136655	FASTENER – FIR TREE MOUNT W/ TIE, 200 MM LG	1	–346189
15	21763	FASTENER – CABLE TIE, BLACK, 160 MM LG	10	–346189
16	30753	FASTENER – CABLE TIE, BLACK, 305 MM LG	1	–346189
A	158658	BOLT – HEX HD M10 X 1.5 X 180-10.9-A3L		
B	50071	BOLT – HEX HD TFL M10 X 1.5 X 15-8.8-A3L		
C	136177	SCREW – PAN HD ISO 7045 M5 X 0.8 X 35-4.8-A2L		
D	197230	NUT – HEX NYLOC M5 X 0.8-8-A2L		

233. The kit includes all listed parts in this Section (Trimble® Autopilot™ – Electrical and Display Mount) and all listed parts in Section *121 (Option) Trimble® Autopilot™ – Hydraulics (2018 and Prior), page 273*. Kits are available through Whole Goods only.

121 (Option) Trimble® Autopilot™ – Hydraulics (2018 and Prior)

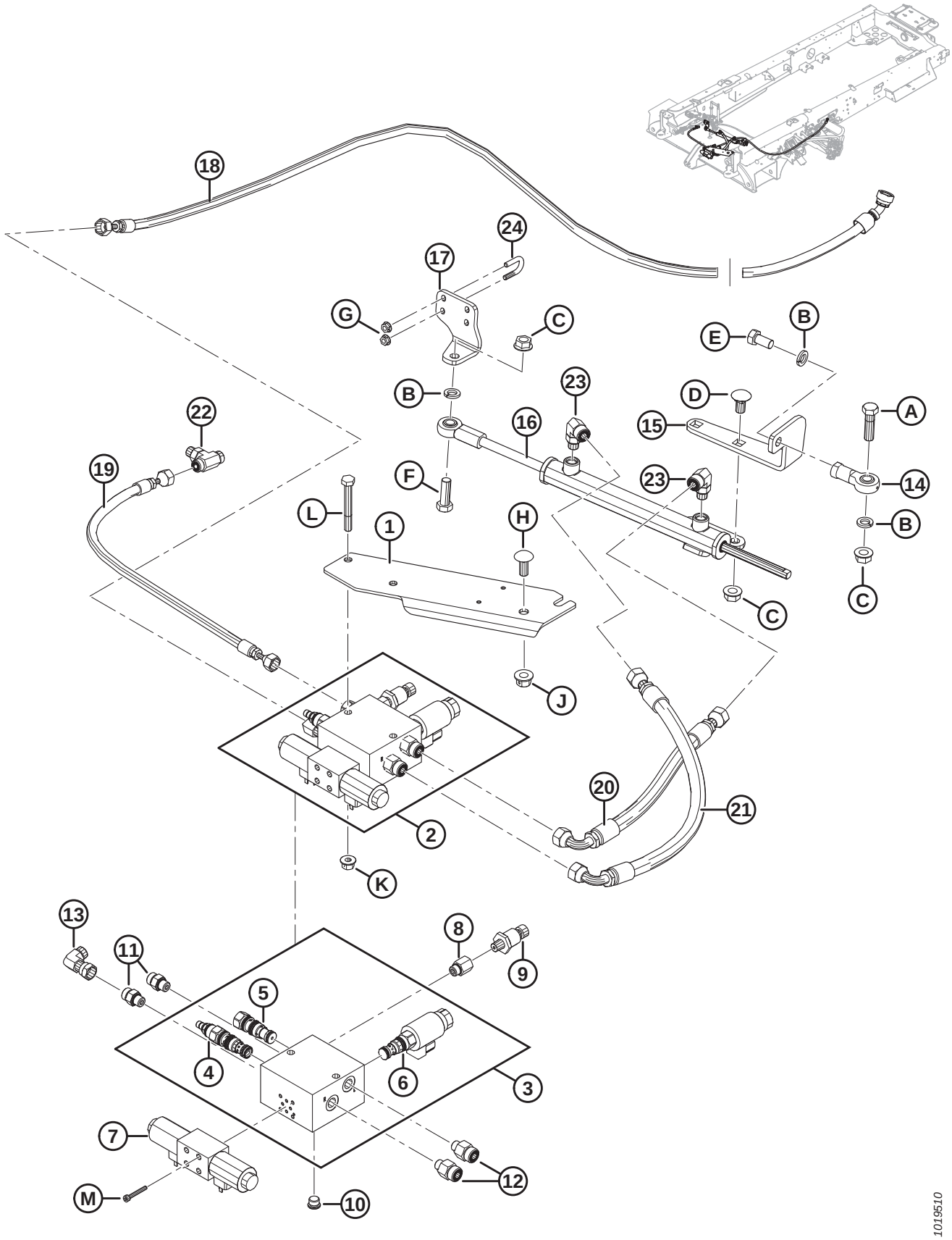

NOTE:

Trimble® Autopilot™ Ready kit MD #B5995 has been replaced by MD #B6601 for model year 2019–2022 and by MD #B9032 for model year 2023 and later. Model year 2016–2018 windrowers are still serviced by kit MD #B5995. For model year 2019–2022 windrowers, and for model year 2023 and later windrowers, refer to Section *124 (Option) Trimble® Autopilot™ – Hydraulics (2019 and Later), page 281*.

Ref	Part Number	Description	Qty	Serial Number
	B5995	KIT – TRIMBLE AUTOPILOT READY [234]		–346189
1	205092	SUPPORT – MANIFOLD MOUNT	1	–346189
2	205764	VALVE – STEERING MANIFOLD ASSY, COMPLETE [235]	1	–346189
3	**173656**	**VALVE – STEERING MANIFOLD ASSEMBLY** [236]	**1**	**–346189**
4	173040	VALVE – PRESSURE REDUCING/RELIEF	1	–346189
	173559	SEAL KIT		
5	173069	VALVE – DIRECTIONAL SHUTTLE	1	–346189
	173559	SEAL KIT		
6	173590	VALVE – DIRECTIONAL C/W COIL	1	–346189
	173560	SEAL KIT		
	173561	COIL		
7	173029	VALVE – PROPORTIONAL DIRECTIONAL	1	–346189
	173562	COIL		
	173563	RETAINER		
	173564	SEAL KIT		
8	53157	FITTING – ADAPTER HYD, C/W O-RING	1	–346189
9	173116	SENDER – PRESSURE 500 PSI	1	–346189
10	100577	PLUG – HEX SOCKET C/W O-RING	1	–346189
11	135778	FITTING – ADAPTER	2	–346189
	50219	O-RING – #6 ORB		
	135865	O-RING – #6 ORFS		
12	135779	FITTING – ADAPTER	2	–346189
	50219	O-RING – #6 ORB		
	135866	O-RING – #8 ORFS		
13	136249	FITTING – ELBOW 90° HYD	1	–346189
	135865	O-RING – #6 ORFS		
14	30083	JOINT – BALL	1	–346189
15	202268	SUPPORT – CYLINDER BALL JOINT	1	–346189
16	208650	CYLINDER – THROUGH ROD	1	–346189
	173575	SEAL KIT		
17	166468	SUPPORT – CYLINDER END	1	–346189
18	207821	HOSE – HYD, 1/4 IN I.D., 2000 MM LG	1	–346189
19	207822	HOSE – HYD, 1/4 IN I.D., 600 MM LG	1	–346189

234. The kit includes all listed parts in this Section (Trimble® Autopilot™ – Hydraulics) and all listed parts in Section *120 (Option) Trimble® Autopilot™ – Electrical and Display Mount (2018 and Prior), page 271*. Kits are available through Whole Goods only.
235. Includes #3–13 and hardware M.
236. Includes pressure relief valve (MD #173040), directional shuttle valve (MD #173069), and directional valve (MD #173590).

(OPTION) TRIMBLE® AUTOPILOT™ – HYDRAULICS (2018 AND PRIOR)

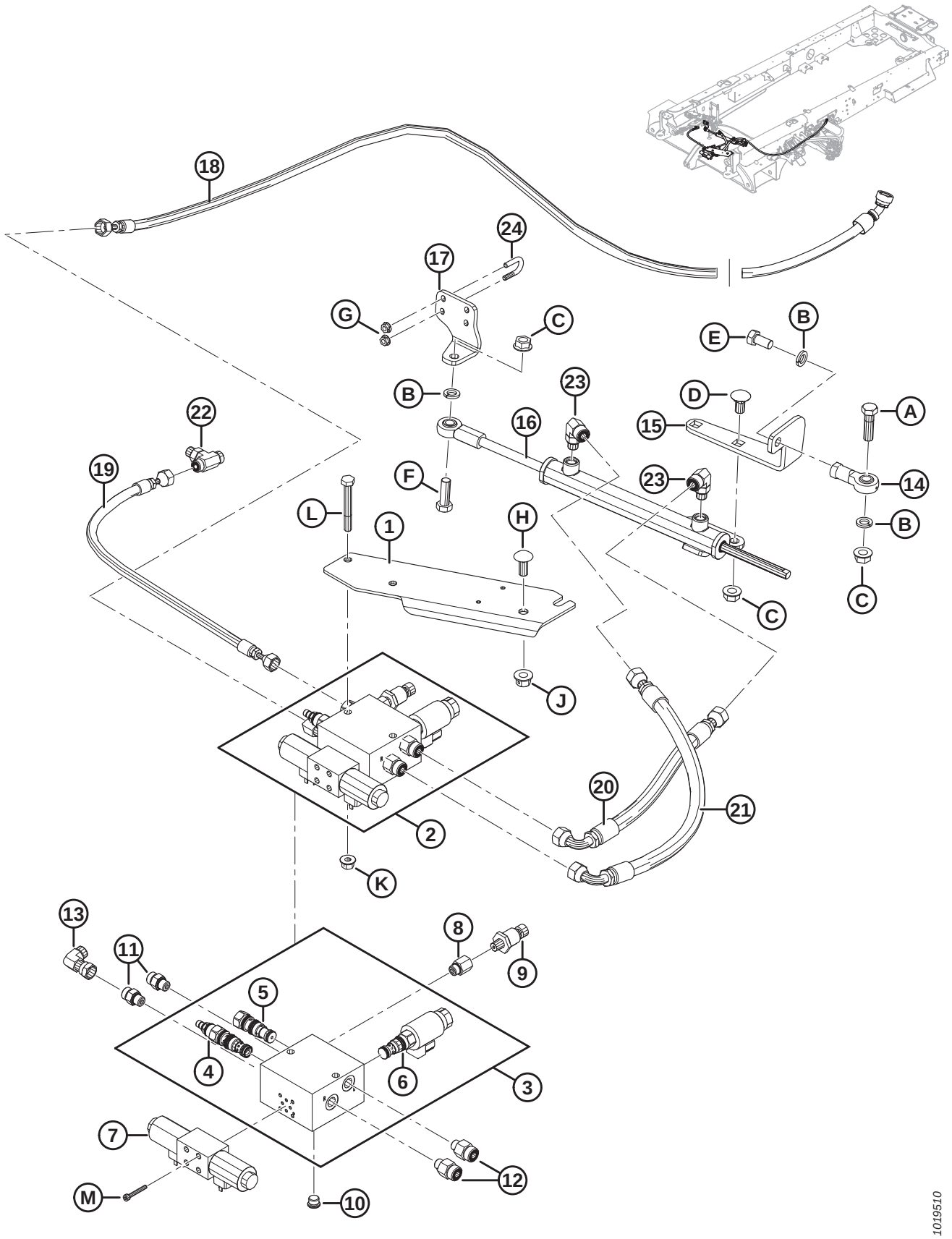

(OPTION) TRIMBLE® AUTOPILOT™ – HYDRAULICS (2018 AND PRIOR)

Ref	Part Number	Description	Qty	Serial Number
20	205483	HOSE – HYD, 1/2 IN I.D., 320 MM LG	1	–346189
21	202269	HOSE – HYD, 1/2 IN I.D., 500 MM LG	1	–346189
22	136566	FITTING – BRANCH TEE HYD 6-6 ORFS	1	–346189
	50219	O-RING – #6 ORB		
	135865	O-RING – #6 ORFS		
23	136238	FITTING – ELBOW 90° HYD	2	–346189
24	166469	U-BOLT	2	–346189
A	21565	BOLT – HH 1/2 NC X 1.75 LG GR 5 ZP		
B	18638	WASHER – REG. LOCK 1/2 IN. NOM. I.D. ZP		
C	50186	NUT – FLANGE LOCK SM FACE DT 0.500-13 UNC GR5		
D	21066	BOLT – RHSN 1/2-13 X 1-GR5-ZP		
E	30470	BOLT – HH 1/2 NF X 1.0 GR 5 ZP		
F	18723	BOLT – HH 1/2 NC X 1.5 LG TFL GR 5 ZP		
G	135248	NUT – FLG SMTH FACE 1/4-20 NC GR 5 ZP CTR LK DT THD		
H	152702	BOLT – RHSSN M12 X 1.75 X 30-8.8-A3L		
J	136431	NUT – HEX FLG CTR LOC M12 X 1.75-10-A3L		
K	135799	NUT – HEX FLG CTR LOC M10 X 1.5-10-A3L		
L	135657	BOLT – HEX HD M10 X 1.5 X 80-8.8-A3L		
M	320391	SCREW – HEX SOC HD #10-24 X 1.5 GR8-ZINC		

122 (Option) Trimble® Autopilot™ – Electrical (2019–2022)

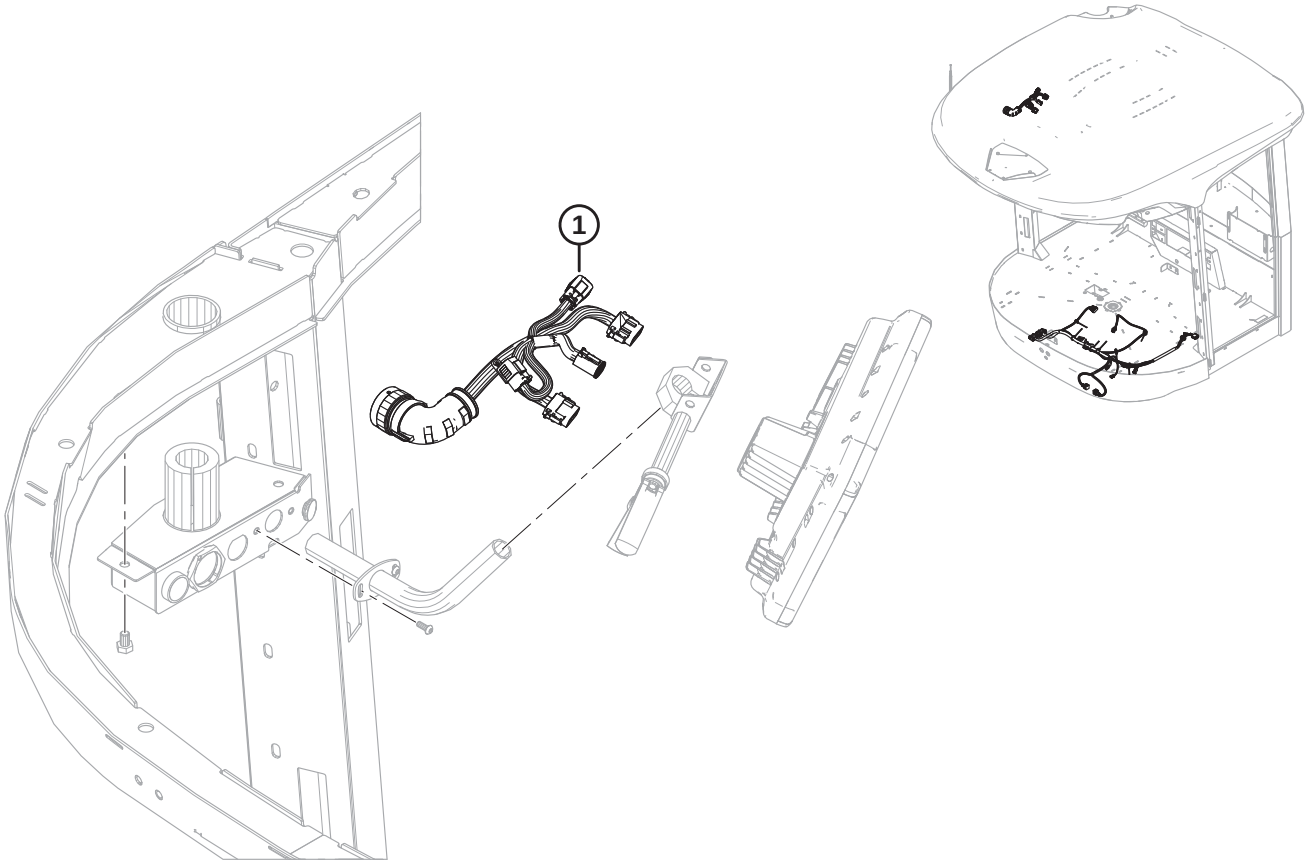

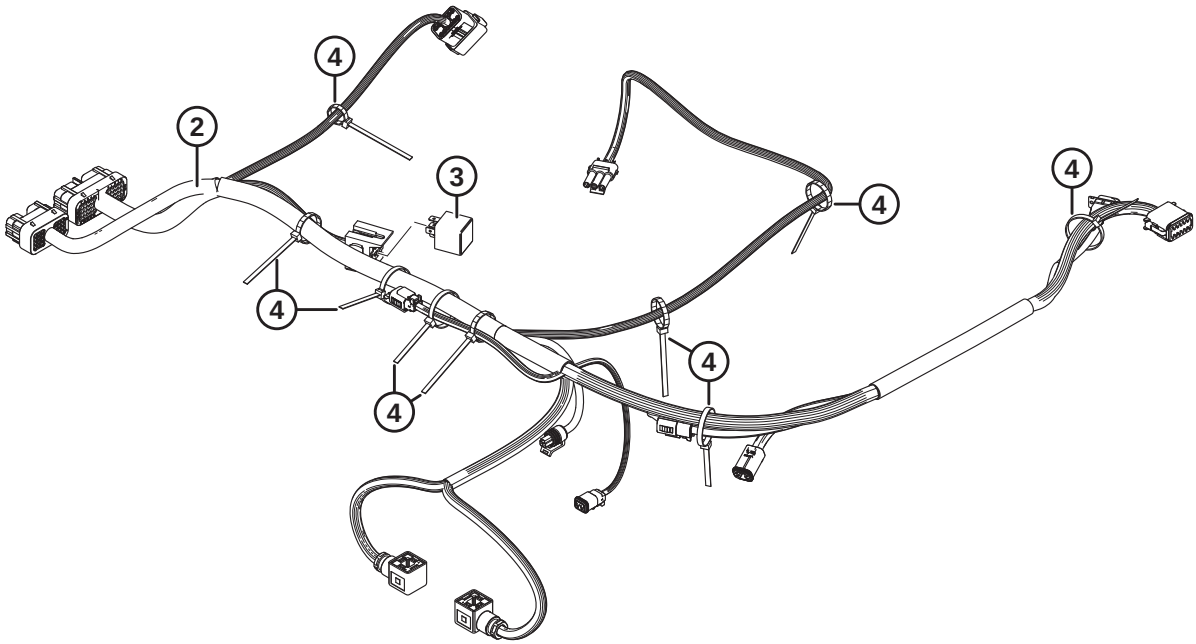

Ref	Part Number	Description	Qty	Serial Number
	B6601	KIT – TRIMBLE AUTOPILOT READY (MY 2019–2022) [237]		346190–451189
1	141493	HARNESS – ADAPTER, TRIMBLE DISPLAY	1	346190–451189
2	207957	HARNESS – AUTOSTEER, TRIMBLE, GPS	1	346190–451189
3	30215	RELAY – MINI, 12VDC	1	346190–451189
4	21763	FASTENER – CABLE TIE, BLACK, 160 MM LG	10	346190–451189

237. The kit includes all listed parts in this Section (Trimble® Autopilot™ – Electrical and Display Mount) and all listed parts in Section *124 (Option) Trimble® Autopilot™ – Hydraulics (2019 and Later), page 281*. Kits are available through Whole Goods only.

123 (Option) Trimble® Autopilot™ – Electrical (2023)

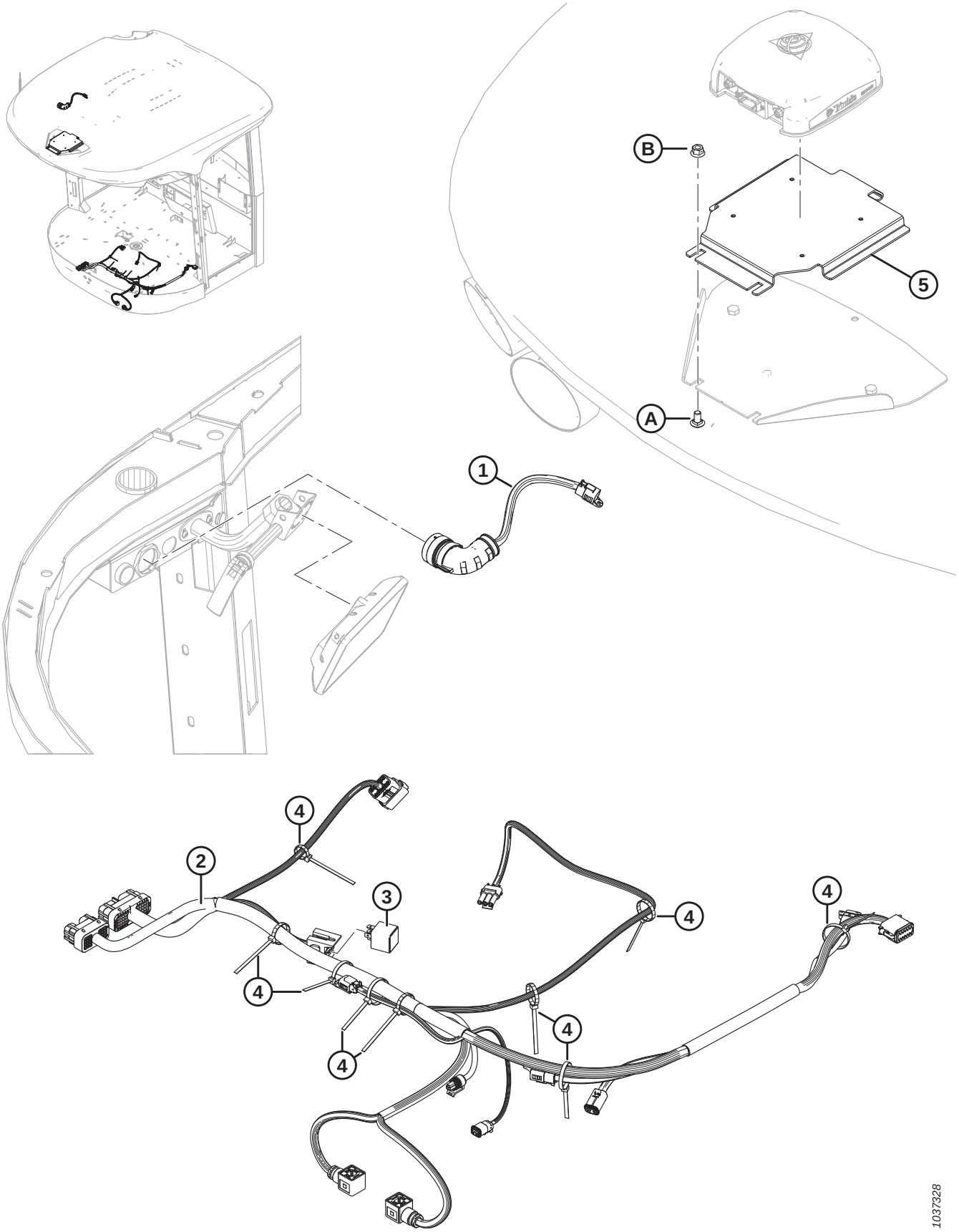

Ref	Part Number	Description	Qty	Serial Number
	B9032	KIT – TRIMBLE AUTOPILOT GFX (MY 2023) [238]		451190–
1	309045	HARNESS – POWER, GFX DISPLAY	1	451190–
2	207957	HARNESS – AUTOSTEER, TRIMBLE, GPS	1	451190–
3	30215	RELAY – MINI, 12VDC	1	451190–
4	21763	FASTENER – CABLE TIE, BLACK, 160 MM LG	10	451190–
5	309037	BRACKET – NAV-900 ANTENNA MOUNT	1	451190–
A	184657	BOLT – RHSSN M10 X 1.5 X 20-8.8-AA1J		
B	135799	NUT – HEX FLG CTR LOC M10 X 1.5-10		

238. The kit includes all listed parts in this Section and all listed parts in Section *124 (Option) Trimble® Autopilot™ – Hydraulics (2019 and Later), page 281*. Kits are available through Whole Goods only.

124 (Option) Trimble® Autopilot™ – Hydraulics (2019 and Later)

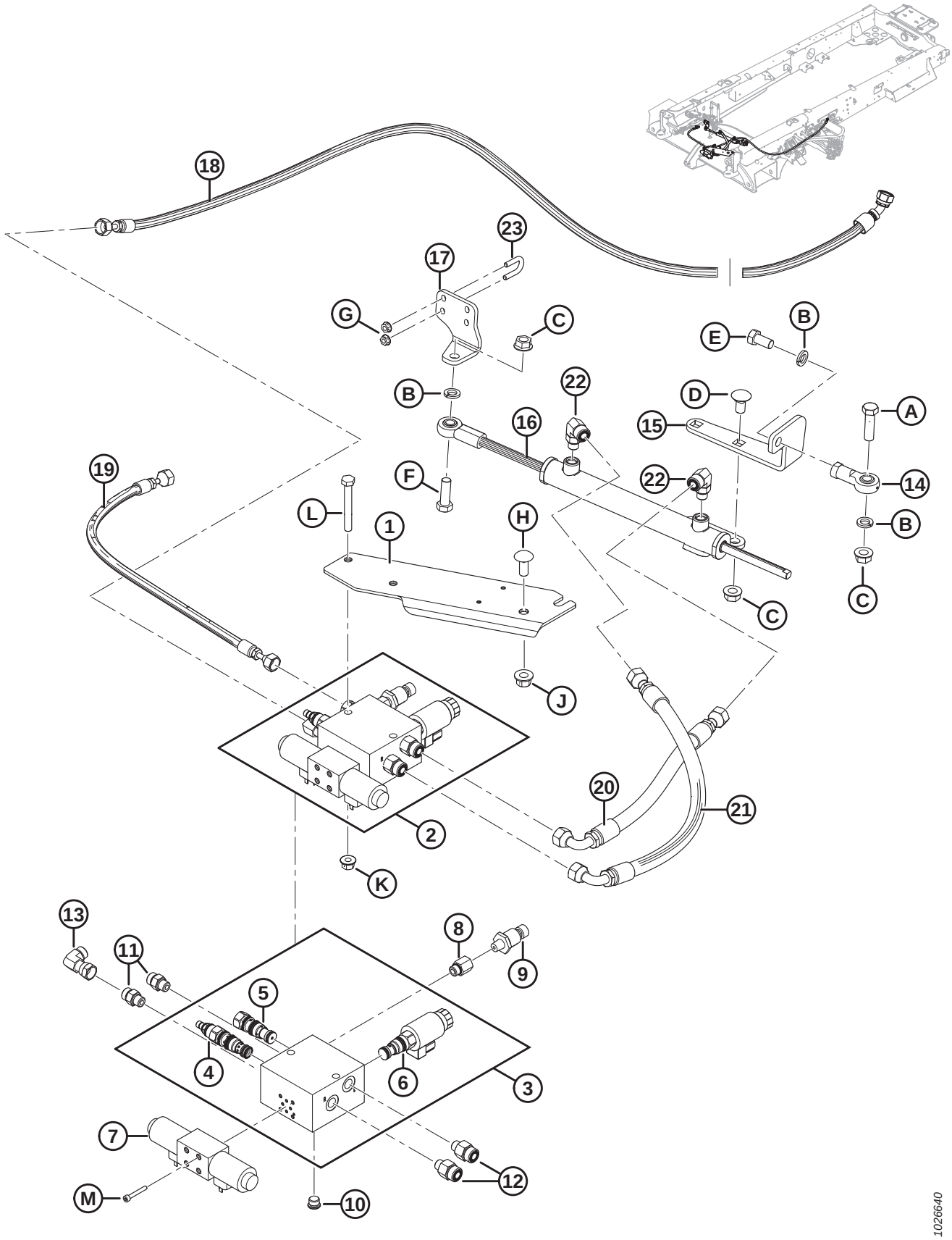

Ref	Part Number	Description	Qty	Serial Number
	B6601	KIT – TRIMBLE AUTOPILOT READY (MY 2019–2022) [239]		346190–451189
	B9032	KIT – TRIMBLE AUTOPILOT GFX (MY 2023) [240]		451190–
1	205092	SUPPORT – MANIFOLD MOUNT	1	346190–
2	205764	VALVE – STEERING MANIFOLD ASSY, COMPLETE [241]	1	346190–
3	**173656**	**VALVE – STEERING MANIFOLD ASSEMBLY** [242]	**1**	346190–
4	173040	VALVE – PRESSURE REDUCING/RELIEF	1	346190–
	173559	SEAL KIT		
5	173069	VALVE – DIRECTIONAL SHUTTLE	1	346190–
	173559	SEAL KIT		
6	173590	VALVE – DIRECTIONAL C/W COIL	1	346190–
	173560	SEAL KIT		
	173561	COIL		
7	173029	VALVE – PROPORTIONAL DIRECTIONAL	1	346190–
	173562	COIL		
	173563	RETAINER		
	173564	SEAL KIT		
8	53157	FITTING – ADAPTER HYD, C/W O-RING	1	346190–
9	173116	SENDER – PRESSURE 500 PSI	1	346190–
10	100577	PLUG – HEX SOCKET C/W O-RING	1	346190–
11	135778	FITTING – ADAPTER	2	346190–
	50219	O-RING – #6 ORB		
	135865	O-RING – #6 ORFS		
12	135779	FITTING – ADAPTER	2	346190–
	50219	O-RING – #6 ORB		
	135866	O-RING – #8 ORFS		
13	136249	FITTING – ELBOW 90° HYD	1	346190–
	135865	O-RING – #6 ORFS		
14	30083	JOINT – BALL	1	346190–
15	202268	SUPPORT – CYLINDER BALL JOINT	1	346190–
16	208650	CYLINDER – THROUGH ROD	1	346190–
	173575	SEAL KIT		
17	166468	SUPPORT – CYLINDER END	1	346190–
18	207821	HOSE – HYD, 1/4 IN I.D., 2000 MM LG	1	346190–
19	207822	HOSE – HYD, 1/4 IN I.D., 600 MM LG	1	346190–
20	205483	HOSE – HYD, 1/2 IN I.D., 320 MM LG	1	346190–
21	202269	HOSE – HYD, 1/2 IN I.D., 500 MM LG	1	346190–

239. The kit includes all listed parts in this Section (Trimble® Autopilot™ – Hydraulics) and all listed parts in Section *122 (Option) Trimble® Autopilot™ – Electrical (2019–2022), page 277*. Kits are available through Whole Goods only.
240. The kit includes all listed parts in this Section (Trimble® Autopilot™ – Hydraulics) and all listed parts in Section *123 (Option) Trimble® Autopilot™ – Electrical (2023), page 279*. Kits are available through Whole Goods only.
241. Includes #3–13 and hardware M.
242. Includes pressure relief valve (MD #173040), directional shuttle valve (MD #173069), and directional valve (MD #173590).

(OPTION) TRIMBLE® AUTOPILOT™ – HYDRAULICS (2019 AND LATER)

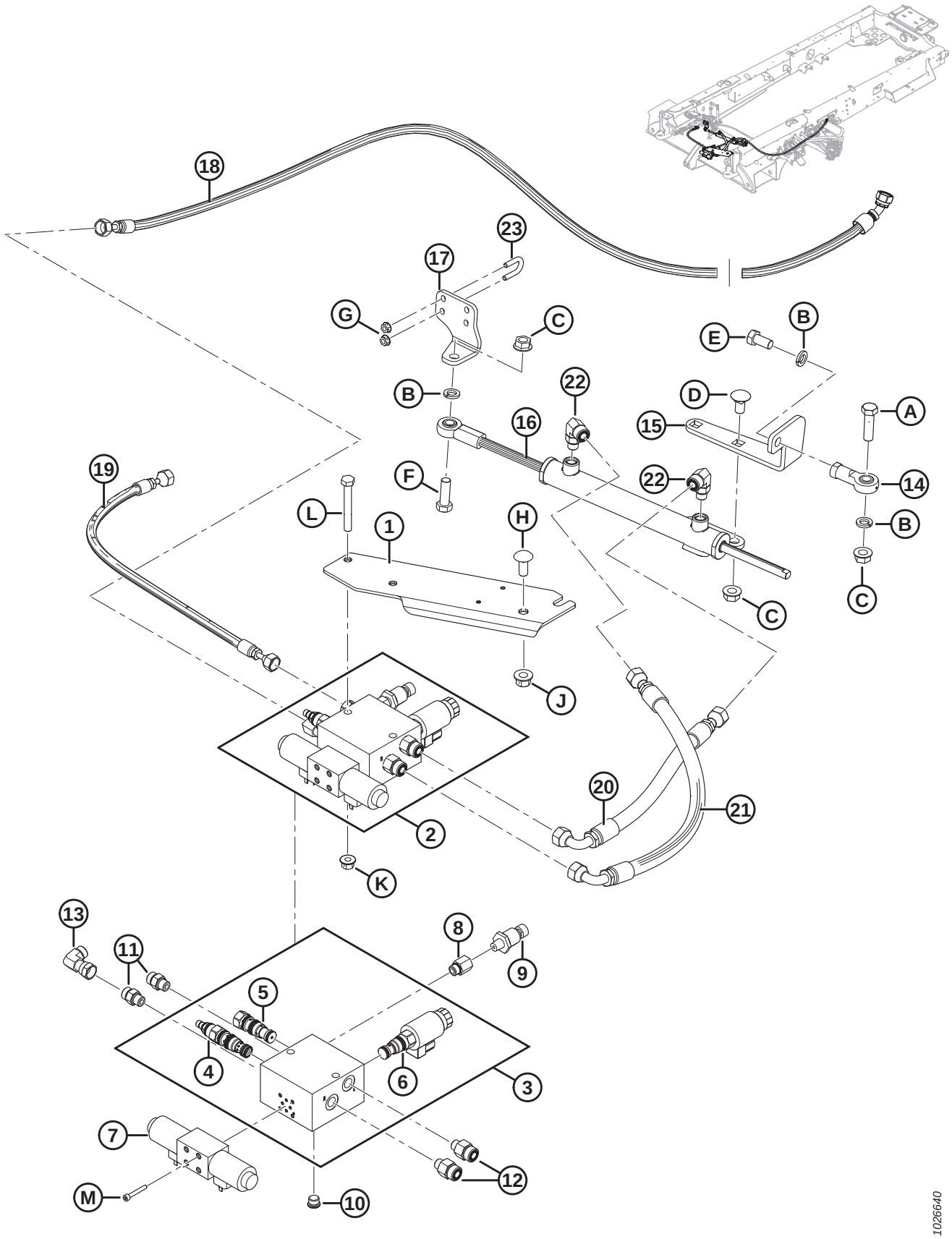

Ref	Part Number	Description	Qty	Serial Number
22	136238	FITTING – ELBOW 90° HYD	2	346190–
23	166469	U-BOLT	2	346190–
A	21565	BOLT – HH 1/2 NC X 1.75 LG GR 5 ZP		
B	18638	WASHER – REG. LOCK 1/2 IN. NOM. I.D. ZP		
C	50186	NUT – FLANGE LOCK SM FACE DT 0.500-13 UNC GR5		
D	21066	BOLT – RHSN 1/2-13 X 1-GR5-ZP		
E	30470	BOLT – HH 1/2 NF X 1.0 GR 5 ZP		
F	18723	BOLT – HH 1/2 NC X 1.5 LG TFL GR 5 ZP		
G	135248	NUT – FLG SMTH FACE 1/4-20 NC GR 5 ZP CTR LK DT THD		
H	152702	BOLT – RHSSN M12 X 1.75 X 30-8.8-A3L		
J	136431	NUT – HEX FLG CTR LOC M12 X 1.75-10-A3L		
K	135799	NUT – HEX FLG CTR LOC M10 X 1.5-10-A3L		
L	135657	BOLT – HEX HD M10 X 1.5 X 80-8.8-A3L		
M	320391	SCREW – HEX SOC HD #10-24 X 1.5 GR8-ZINC		

125 (Option) Trimble® EZ-Pilot® – Electrical and Display Mount (2018 and Prior)

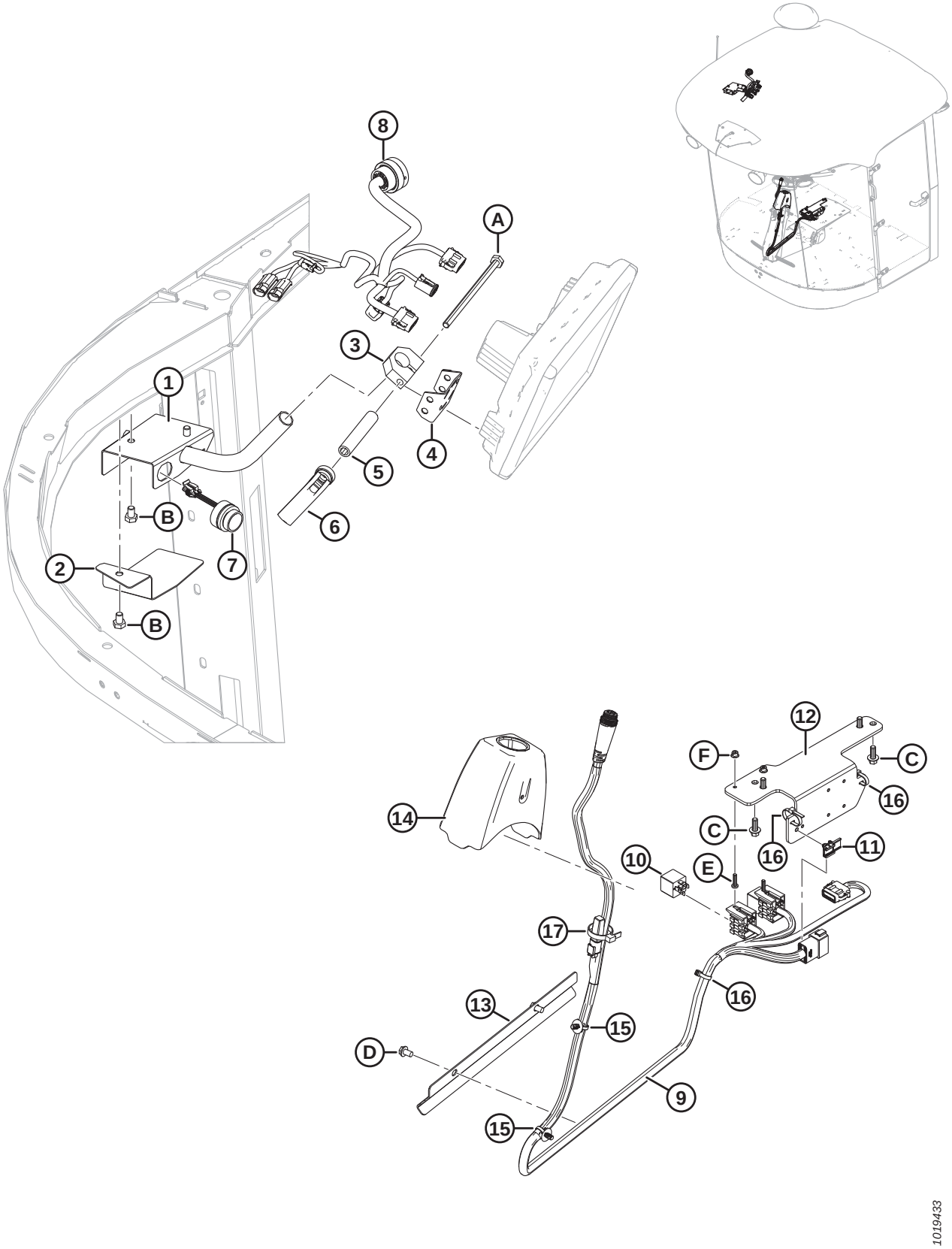

NOTE:

Trimble® EZ-Pilot® Ready kit MD #B5996 has been replaced by kit MD #B6602 for model year 2019–2022 and by kit MD #B9031 for model year 2023 and later. Model year 2016–2018 windrowers are still serviced by kit MD #B5996. For model year 2019–2022 windrowers, refer to Section *126 (Option) Trimble® EZ-Pilot® – Electrical (2019–2022), page 287*. For model year 2023 and later windrowers, refer to Section *127 (Option) Trimble® EZ-Pilot® – Electrical (2023), page 289*

Ref	Part Number	Description	Qty	Serial Number
	B5996	KIT – TRIMBLE EZ-PILOT READY [243]		–346189
1	205592	SUPPORT WELDT GPS DISPLAY	1	–346189
2	206451	COVER – GPS SUPPORT	1	–346189
3	205600	CLAMP – GPS DISPLAY	1	–346189
4	205595	SUPPORT WELDT GPS DISPLAY	1	–346189
5	205598	SPACER – GPS DISPLAY	1	–346189
6	136696	LEVER	1	–346189
7	183316	BUZZER – SONALERT	1	–346189
8	209411	HARNESS – ADAPTER, TRIMBLE DISPLAY	1	–346189
9	207956	HARNESS – EZ-PILOT GPS	1	–346189
10	30215	RELAY – MINI, 12 VDC	2	–346189
11	134612	CLIP – RECEPTACLE MOUNT	1	–346189
12	291054	SUPPORT – GPS MODULE	1	–346189
13	204769	GUIDE – WIRING	1	–346189
14	208815	TOP COVER – WITHOUT LIP	1	–346189
15	136655	FASTENER – FIR TREE MOUNT W/ TIE, 200 MM LG	2	–346189
16	21763	FASTENER – CABLE TIE, BLACK, 160 MM LG	3	–346189
17	30753	FASTENER – CABLE TIE, BLACK, 305 MM LG	1	–346189
A	158658	BOLT – HEX HD M10 X 1.5 X 180-10.9-A3L		
B	50071	BOLT – HEX HD TFL M10 X 1.5 X 15-8.8-A3L		
C	136300	BOLT – HEX FLG HD TFL M8 X 1.25 X 20-8.8-AA3L		
D	50124	SCREW – HEX WASHER HD THD CUTTING		
E	184640	BOLT – HEX HD M5 X 0.8 X 20-8.8-AA1J		
F	197230	NUT – HEX NYLOC M5 X 0.8-8-AA1J		

243. The kit includes all listed parts. Kits are available through Whole Goods only.

126 (Option) Trimble® EZ-Pilot® – Electrical (2019–2022)

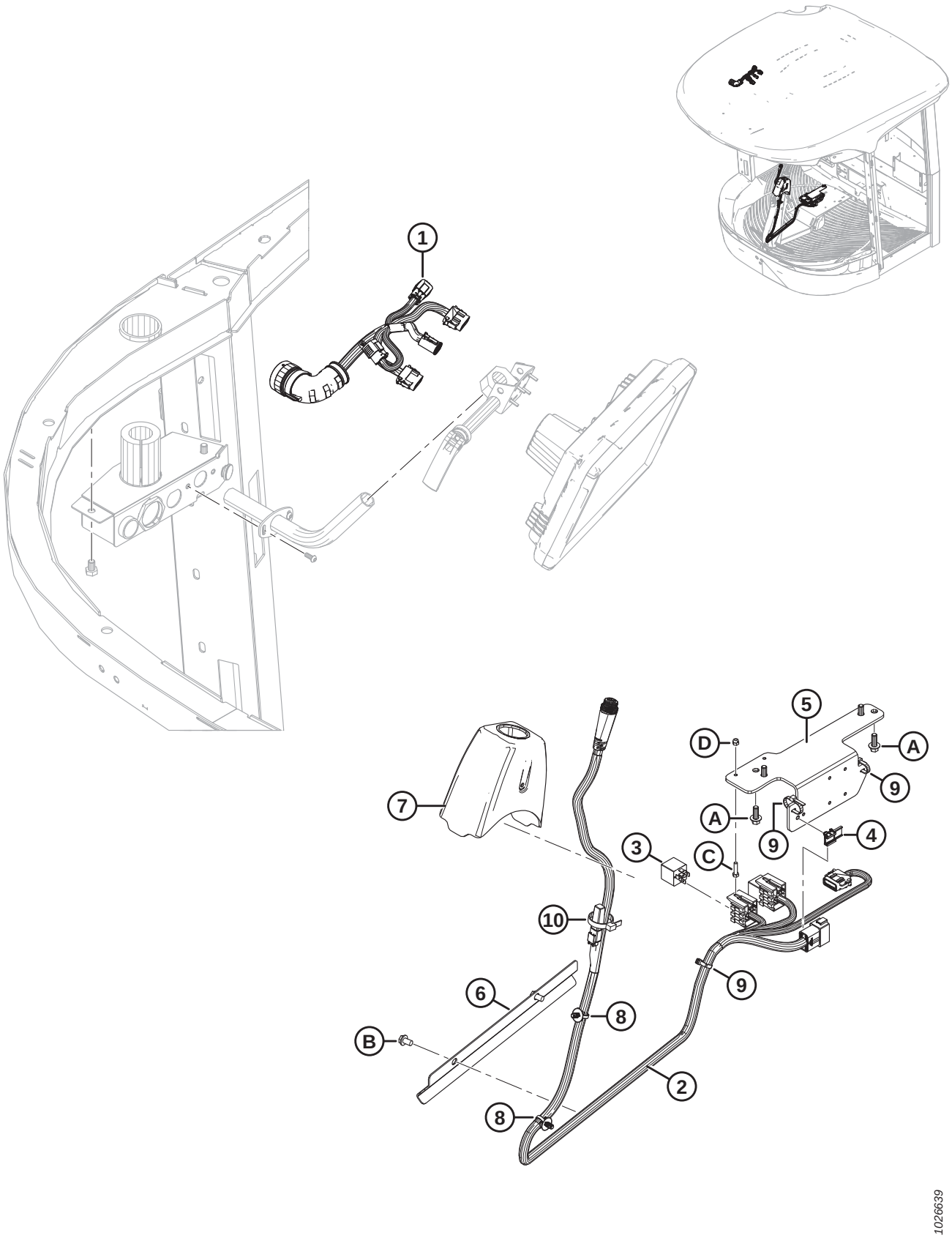

(OPTION) TRIMBLE® EZ-PILOT® – ELECTRICAL (2019–2022)

Ref	Part Number	Description	Qty	Serial Number
	B6602	KIT – TRIMBLE EZ-PILOT READY (MY 2019–2022) [244]		346190–451189
1	141493	HARNESS – ADAPTER, TRIMBLE DISPLAY	1	346190–451189
2	207956	HARNESS – EZ-PILOT GPS	1	346190–451189
3	30215	RELAY – MINI, 12 VDC	2	346190–451189
4	134612	CLIP – RECEPTACLE MOUNT	1	346190–451189
5	291054	SUPPORT – GPS MODULE	1	346190–451189
6	204769	GUIDE – WIRING	1	346190–451189
7	208815	TOP COVER – WITHOUT LIP	1	346190–451189
8	136655	FASTENER – FIR TREE MOUNT W/ TIE, 200 MM LG	2	346190–451189
9	21763	FASTENER – CABLE TIE, BLACK, 160 MM LG	3	346190–451189
10	30753	FASTENER – CABLE TIE, BLACK, 305 MM LG	1	346190–451189
A	136300	BOLT – HEX FLG HD TFL M8 X 1.25 X 20-8.8-AA3L		
B	50124	SCREW – HEX WASHER HD THD CUTTING		
C	184640	BOLT – HEX HD M5 X 0.8 X 20-8.8-A2L		
D	197230	NUT – HEX NYLOC M5 X 0.8-8-A2L		

244. The kit includes all listed parts. Kits are available through Whole Goods only.

127 (Option) Trimble® EZ-Pilot® – Electrical (2023)

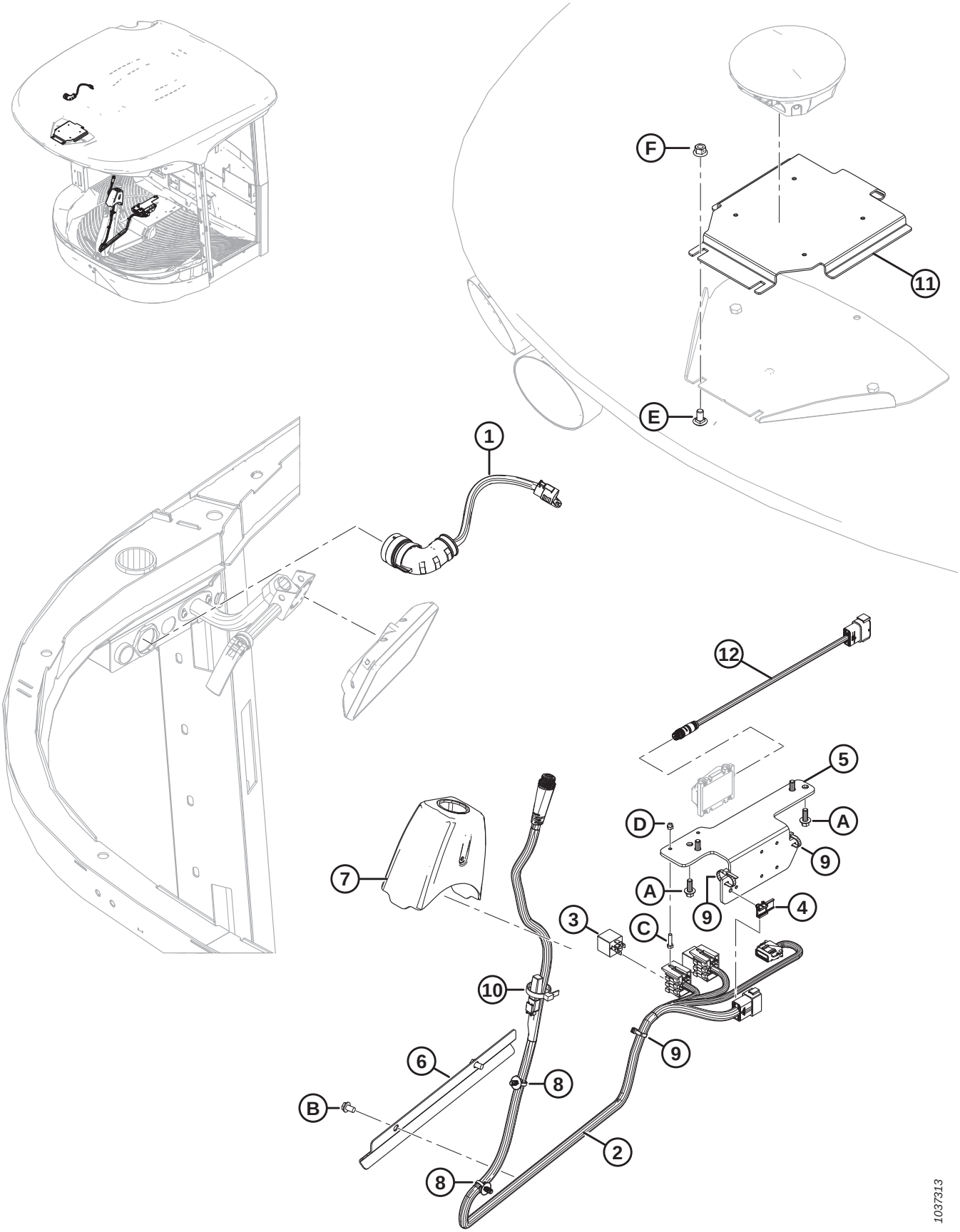

(OPTION) TRIMBLE® EZ-PILOT® – ELECTRICAL (2023)

Ref	Part Number	Description	Qty	Serial Number
	B9031	KIT – ELECTRIC MOTOR DRIVE READY, TRIMBLE GFX (MY 2023) [245]		451190–
1	309045	HARNESS – POWER, GFX DISPLAY	1	451190–
2	207956	HARNESS – EZ-PILOT GPS	1	451190–
3	30215	RELAY – MINI, 12 VDC	2	451190–
4	134612	CLIP – RECEPTACLE MOUNT	1	451190–
5	291054	SUPPORT – GPS MODULE	1	451190–
6	204769	GUIDE – WIRING	1	451190–
7	208815	TOP COVER – WITHOUT LIP	1	451190–
8	136655	FASTENER – FIR TREE MOUNT W/ TIE, 200 MM LG	2	451190–
9	21763	FASTENER – CABLE TIE, BLACK, 160 MM LG	3	451190–
10	30753	FASTENER – CABLE TIE, BLACK, 305 MM LG	1	451190–
11	309037	BRACKET – NAV-900 ANTENNA MOUNT	1	451190–
12	309057	HARNESS – ADAPTER, IMD-900	1	451190–
A	136300	BOLT – HEX FLG HD TFL M8 X 1.25 X 20-8.8-AA3L		
B	50124	SCREW – HEX WASHER HD THD CUTTING		
C	184640	BOLT – HEX HD M5 X 0.8 X 20-8.8-A2L		
D	197230	NUT – HEX NYLOC M5 X 0.8-8-A2L		
E	184657	BOLT – RHSSN M10 X 1.5 X 20-8.8-AA1J		
F	135799	NUT – HEX FLG CTR LOC M10 X 1.5-10		

245. The kit includes all listed parts. Kits are available through Whole Goods only.

128 (Option) Trimble® GFX Compatibility for M1 Series (2017–2022)

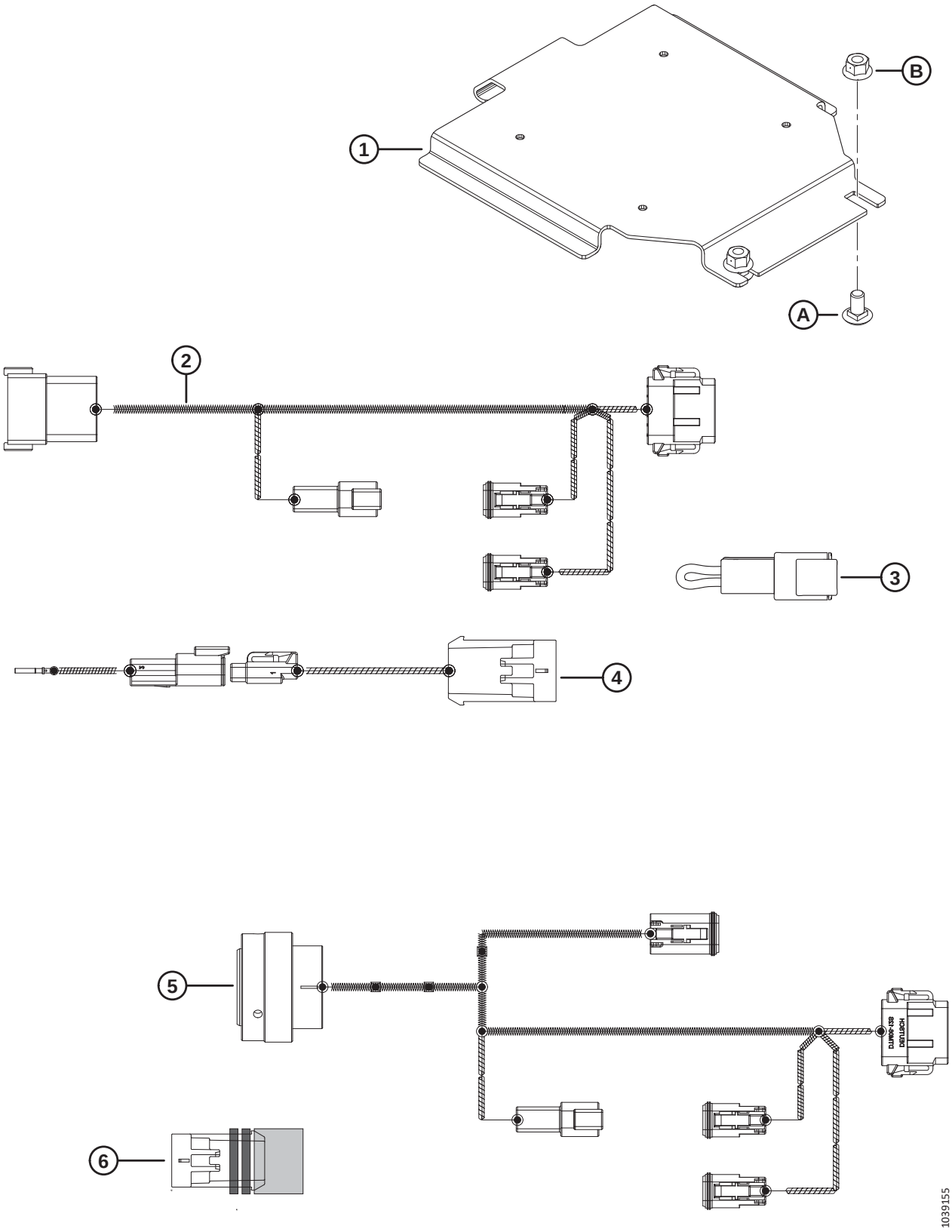

(OPTION) TRIMBLE® GFX COMPATIBILITY FOR M1 SERIES (2017–2022)

NOTE:

A Trimble® GFX Compatibility kit is required if using a Trimble® GFX display on model year 2017–2022 windrowers. Model year 2023 and later windrowers are compatible with GFX displays from the factory.

- B9004 is for model year 2017–2018 windrowers
- B9005 is for model year 2019–2022 windrowers

Ref	Part Number	Description	Qty	Serial Number
	B9004	KIT – M1 SERIES TRIMBLE GFX (2017–2018) [246]		–346189
	B9005	KIT – M1 SERIES TRIMBLE GFX (2019–2022) [247]		346190–451189
1	309037	BRACKET – NAV-900 ANTENNA MOUNT	1	
2	309035	HARNESS – ADAPTER, GFX AUTOPILOT (2017–2018) [248]	1	–346189
3	309043	JUMPER – TBC, GPS, M/M1 SERIES (2017–2018) [248]	1	–346189
4	309053	JUMPER – E STOP SWITCH (2017–2018) [248]	1	–346189
5	309034	HARNESS – GFX, EZ/AUTO-PILOT (2019–2022) [249]	1	346190–451189
6	309044	JUMPER – GPS, TBC (2019–2022) [249]	1	346190–451189
A	184657	BOLT – RHSSN M10 X 1.5 X 20-8.8-AA1J		
B	135799	NUT – HEX FLG CTR LOC M10 X 1.5-10		

246. Required if using a Trimble® GFX display on model year 2017–2018 windrowers. The kit includes adapter harness (MD #309035), jumper plug (MD #309043), E-stop switch jumper (MD #309053), mounting bracket (MD #309037), and hardware. Kits are available through Whole Goods only.
247. Required if using a Trimble® GFX display on model year 2019–2022 windrowers. The kit includes harness (MD #309034), jumper plug (MD #309044), mounting bracket (MD #309037), and hardware. Kits are available through Whole Goods only.
248. Included in B9004 (model year 2017–2018 windrowers).
249. Included in B9005 (model year 2019–2022 windrowers).

129 (Option) Trimble® TMX Compatibility Kits

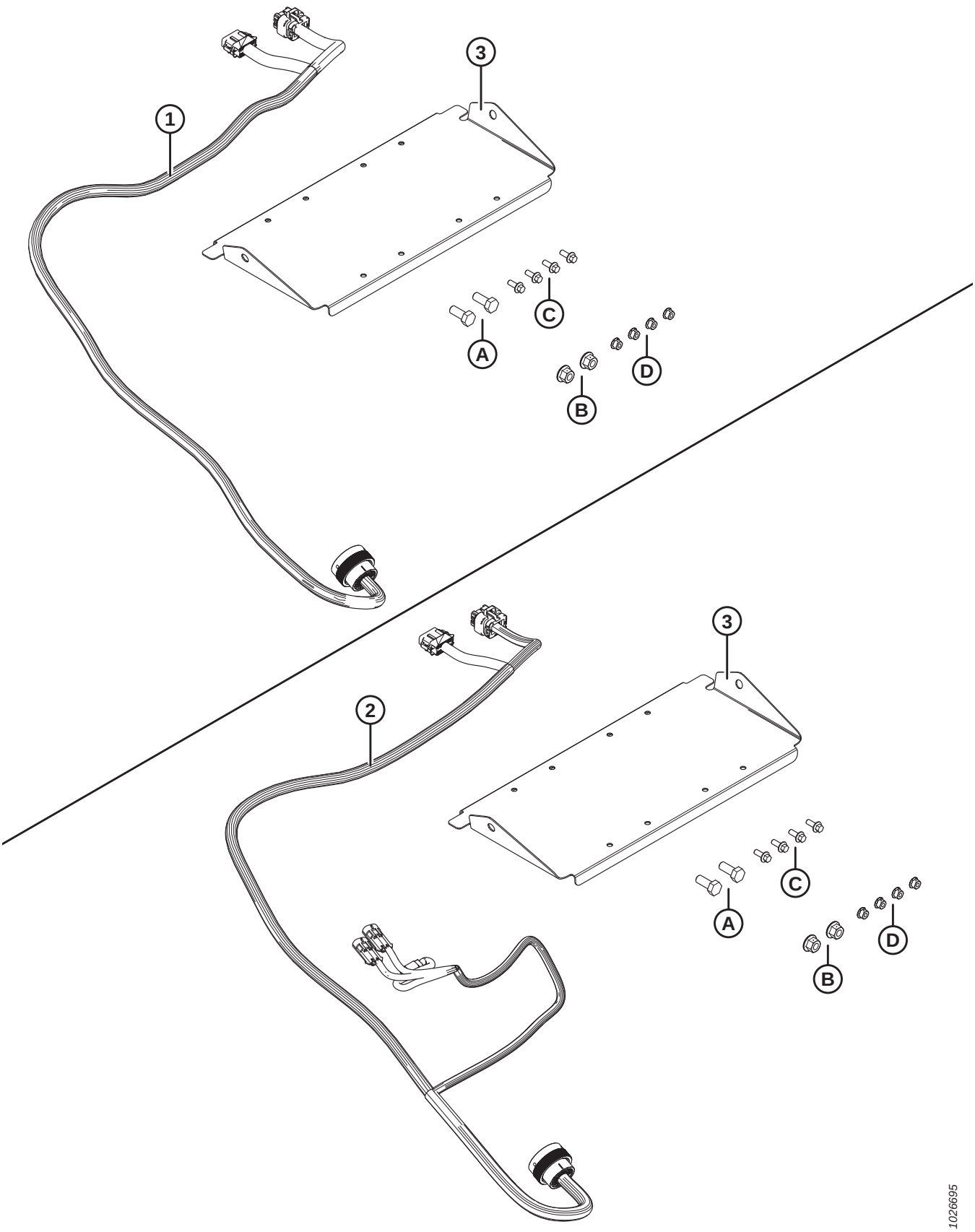

(OPTION) TRIMBLE® TMX COMPATIBILITY KITS

Ref	Part Number	Description	Qty	Serial Number
	141721	KIT – TRIMBLE TMX COMP (2019–LATER) [250]		
	141736	KIT – TRIMBLE TMX COMP, 2017/2018 [251]		
1	141492	HARNESS – ADAPTER, TRIMBLE TMX (2019–LATER)	1	
2	141224	HARNESS – ADAPTER, TRIMBLE TMX (2018–PRIOR)	1	
3	291610	SUPPORT – TM 200	1	
A	30627	BOLT – HEX HD TFL M10 X 1.5 X 25-8.8-A3L		
B	135799	NUT – HEX FLG CTR LOC M10 X 1.5-10		
C	135959	BOLT – HEX FLG HD M6 X 1 X 16-10.9-A2L		
D	152668	NUT – HEX FLG CTR LOC M6 X 1-8		

250. Includes adapter harness MD #141492, support MD #291610, hardware, and instructions.
251. Includes adapter harness MD #141224, support MD #291610, hardware, and instructions.

130 (Option) Aftermarket GPS Steering Wheel Kits

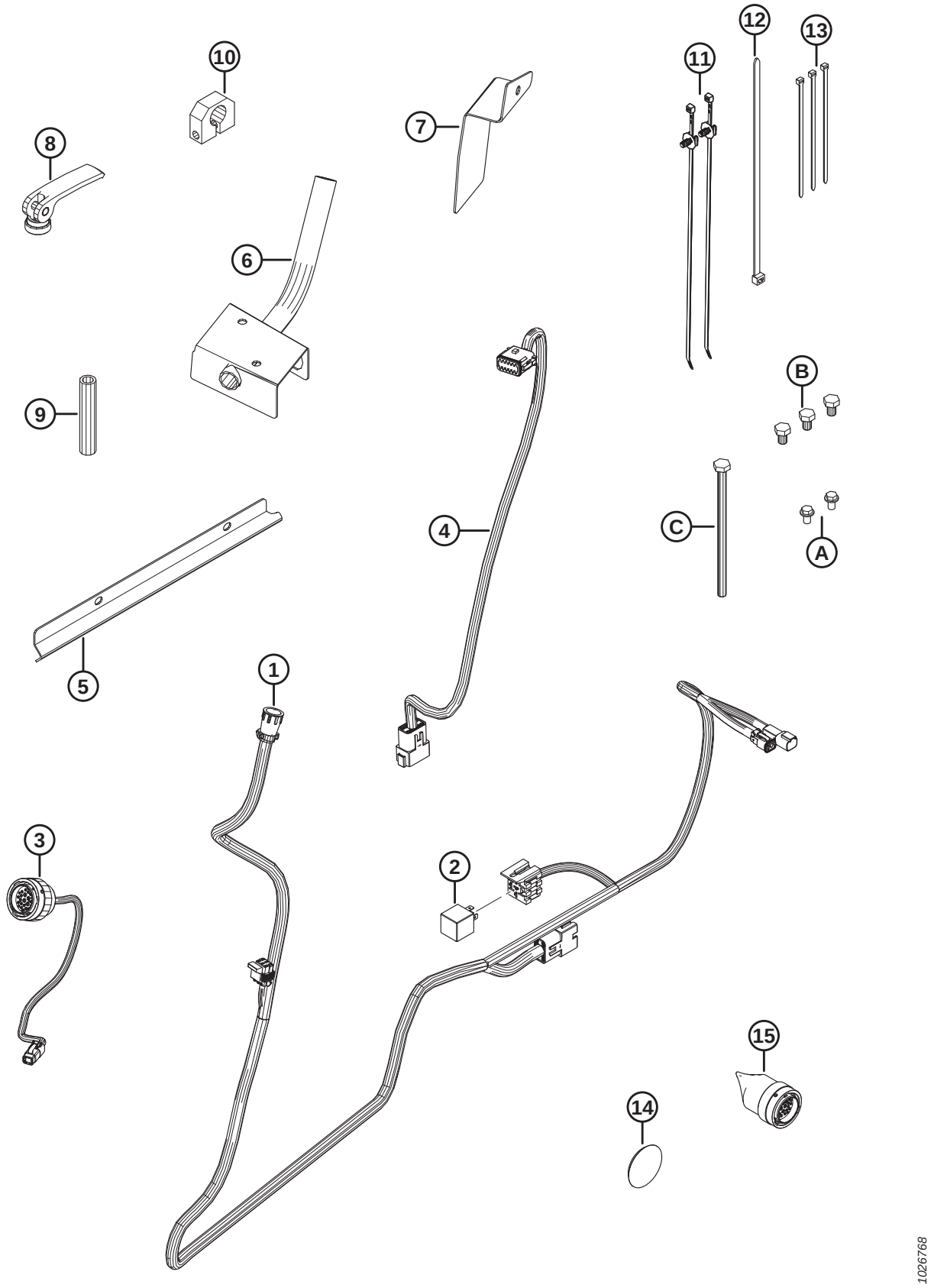

(OPTION) AFTERMARKET GPS STEERING WHEEL KITS

Ref	Part Number	Description	Qty	Serial Number
	309028	KIT – AFTERMARKET GPS ON WHEEL (2020 AND LATER) [252]		371190–
	141737	KIT – AFTERMARKET GPS ON WHEEL (2019) [253]		346190–371189
	141701	KIT – AFTERMARKET GPS ON WHEEL (2017/2018) [254]		–346189
1	209422	HARNESS – ATU	1	
2	30215	RELAY – MINI, 12 VDC	1	
3	207949	HARNESS – ADAPTER, JD E-STOP	1	
4	141490	HARNESS – EXT., ANTENNA W1	1	
5	204769	GUIDE – WIRING	1	
6	205592	SUPPORT WELDT – GPS DISPLAY	1	
7	206451	COVER – GPS SUPPORT	1	
8	136696	LEVER	1	
9	205598	SPACER – GPS DISPLAY	1	
10	306097	CLAMP – GPS DISPLAY	1	
11	136655	FASTENER – FIR TREE MT W/ TIE	2	
12	30753	FASTENER – CABLE TIE, BLACK, 305 MM LG	1	
13	21763	FASTENER – CABLE TIE, BLACK, 160 MM LG	3	
14	306074	CAP – GPS BULKHEAD	1	
15	309024	PLUG – ADAPTER, W1 (2020 AND LATER) [255]	1	371190–
	141497	PLUG – ADAPTER, W1 (2019 AND PRIOR) [256]	1	–371189
A	50124	SCREW – HEX WASHER HD THD CUTTING		
B	50071	BOLT – HEX HD TFL M10 X 1.5 X 15-8.8-AA1J		
C	158658	BOLT – HEX HD M10 X 1.5 X 180-10.9-AA1J		

252. Includes ATU harness (MD #209422), relay (MD #30215), wiring guide (MD #204769), cap (MD #306074), plug (MD #309024), screw (MD #50124), and instructions.
253. Includes ATU harness (MD #209422), relay (MD #30215), wiring guide (MD #204769), cap (MD #306074), plug (MD #141497), screw (MD #50124), and instructions.
254. Includes items #1–13, hardware A–C, and instructions.
255. For model year 2020 and later.
256. For model year 2019 and prior.

131 (Option) Weight Box

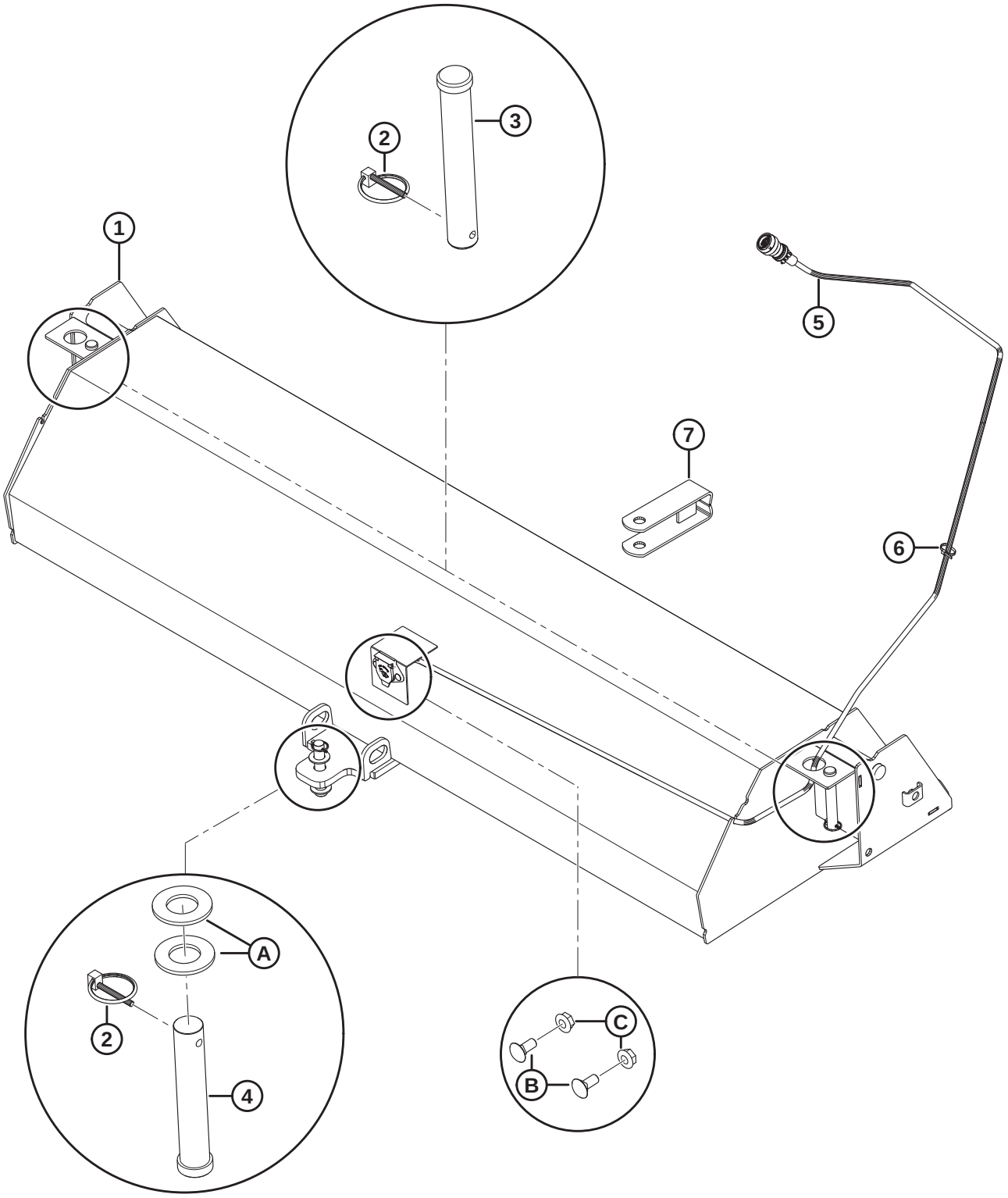

(OPTION) WEIGHT BOX

Ref	Part Number	Description	Qty	Serial Number
	B5238	KIT – WEIGHT BOX (C/W CONCRETE) [257]		
	B5240	KIT – WEIGHT BOX (LESS CONCRETE) [258]		
	B6048	KIT – HARNESS AND HITCH PIN FOR WEIGHT BOX [259]		
1	122080	FRAME – WEIGHT BOX WELDMENT	1	
2	102264	PIN – LYNCH 3/16 X 1 9/16 IN.	3	
3	112752	PIN – CLEVIS	2	
4	49341	PIN – CLEVIS	1	
5	208812	HARNESS – WEIGHT BOX (M1 SERIES)	1	
6	21763	FASTENER – CABLE TIE, BLACK, 160 MM LG	1	
7	113536	CLEVIS WELDT	1	
A	18603	WASHER – SAE FLAT 1 1/16 IN I.D. X 2.0 IN O.D. ZP		
B	21281	BOLT – RHSN 5/16 NC X 0.75 GR 5 ZP		
C	30280	NUT – FLG SIDE LK SMTH FACE 5/16 NC GR 5 ZP		

257. Kits are available through Whole Goods only.
258. For export orders, order Weight Box Less Concrete (MD #B5240). The weight box must be filled with concrete at destination as per supplied instructions. Kits are available through Whole Goods only.
259. Includes lynch pin (MD #102264), clevis pin (MD #49341), and hardware (MD #21281, 30280). Kits are available through Whole Goods only.

Index

5744 142
5745 142
7536 30
7674 144
9423 38
11695 6
13617 ..... 34, 136
14294 136
16652 2
17675 38
18599 130
18601 52
18602 138
18603 298
18604 54
18605 ..... 54, 230
18606 124
18609 30
18637 206
18638 ..... 276, 284
18639 142
18648 ..... 38, 124
18671 ..... 20, 24
18723 ..... 276, 284
18728 54
18810 140
19685 216
19739 ..... 6, 34, 124
20023 60
20214 138
21006 148
21032 ..... 72, 102
21046 10
21055 90
21066 ..... 276, 284
21153 24
21235 156
21264 206
21281 298
21357 24
21358 24
21565 ..... 150, 276, 284
21566 256
21574 256
21581 150
21762 138
21763 ..... 10, 16, 38, 46, 50, 54, 74, 90, 100, 108, 130, 132, 188, 208, 210, 212, 214, 216, 218, 234, 240, 250, 272, 278, 280, 286, 288, 290, 296, 298
21810 66
21854 256
21880 160
21947 220
21980 186
21995 ..... 152, 204
23050 42
23165 244
25321 130
28700 130
30045 ..... 142, 148
30083 ..... 274, 282
30191 164
30200 162
30203 ..... 162, 166
30205 ..... 162, 166
30215 ..... 74, 272, 278, 280, 286, 288, 290, 296
30228 102
30243 22
30278 170
30280 298
30346 142
30470 ..... 276, 284
30492 88
30500 60
30505 ..... 6, 30, 52, 138, 140, 250
30516 124
30524 268
30591 ..... 136, 178
30626 16
30627 ..... 6, 34, 142, 294
30628 ..... 42, 140
30632 ..... 30, 142
30633 ..... 138, 140, 210
30635 98
30655 ..... 86, 208
30659 138
30660 138
30682 ..... 140, 142
30715 98
30716 ..... 54, 138
30753 ..... 10, 108, 202, 204, 218, 232, 234, 240, 272, 286, 288, 290, 296
30971 ..... 50, 144, 148, 150, 152, 158, 160, 172, 180, 184, 186, 192, 204, 208, 256
31889 218
32247 138
35618 8
38854 142
39273 24
40701 ..... 144, 210
40702 ..... 16, 44, 108, 144, 210
42030 150
42039 140
42075 104
42080 ..... 60, 194

INDEX

42292 ..... 90, 92, 104
42415 ..... 70, 74, 90, 98
42469 108
42497 30
42765 162
44209 ..... 34, 150, 172, 176, 180, 192, 200
44210 ..... 50, 144, 148, 150, 158, 160, 180, 184, 186, 200
45155 194
45427 10
49341 298
49874 162
49879 164
50022 ..... 16, 108
50040 ..... 140, 142
50071 ..... 86, 90, 272, 286, 296
50124 ..... 286, 288, 290, 296
50139 ..... 34, 54
50140 6
50154 142
50155 150
50186 ..... 276, 284
50193 38
50219 ..... 38, 136, 140, 150, 158, 160, 172, 180, 182, 184, 192, 200, 250, 274, 276, 282
50220 ..... 150, 152, 176, 178, 180, 184, 186, 192, 266
50222 ..... 150, 170
50223 ..... 30, 136, 148, 158, 160, 182
50225 138
50230 ..... 166, 178
50231 162
53157 ..... 274, 282
100577 ..... 180, 200, 274, 282
101007 38
101375 244
101904 60
102264 298
103523 174
103738 214
108172 ..... 124, 250
109080 88
109081 88
109224 78
109312 130
109313 136
109350 124
109478 124
109479 124
109505 132
109585 98
109598 98
109603 ..... 54, 56
109611 124
109740 98
109750 ..... 130, 136
109751 124
109779 124
109797 88
109807 136
109812 ..... 114, 116
109818 136
109822 98
109850 ..... 114, 118
109855 114
109856 ..... 114, 116
109857 ..... 114, 116
109858 116
109859 ..... 114, 116
109860 ..... 114, 116, 118, 120
109861 ..... 114, 116
109862 ..... 114, 118
109865 116
109918 82
109968 ..... 114, 118
109971 ..... 114, 118
110267 ..... 70, 78
110584 22
110585 6
110817 ..... 54, 56
110853 30
110971 38
110977 ..... 140, 250
110988 244
110995 42
110996 42
111060 104
111093 ..... 162, 166
111099 162
111105 162
111216 24
111221 244
111258 162
111504 224
111511 142
111521 142
111528 ..... 142, 258, 260
111546 142
111599 140
111608 10
111665 142
111677 142
111772 142
111834 250
111895 ..... 50, 146
111896 146
111897 146
111898 146
111899 146
111900 146
111907 ..... 146, 154
111908 146

111909 146
111910 146
111911 146
111913 146
111914 146
111919 146
111935 156
111938 156
111939 156
111941 156
111942 156
111954 ..... 46, 270
111955 ..... 46, 270
111956 46
111957 46
111974 ..... 42, 270
111975 186
111978 176
111990 136
112475 ..... 26, 28
112625 38
112662 42
112692 ..... 16, 108
112727 30
112752 298
112789 30
112824 100
112866 206
112867 148
112868 ..... 206, 210
112916 30
113536 298
113799 80
115145 ..... 244, 254
115146 244
115147 ..... 244, 254
115148 ..... 72, 102
120901 22
122080 298
123071 30
129711 ..... 182, 190
129800 172
129801 172
129976 172
129977 172
132531 140
133820 190
133992 30
134003 ..... 6, 54
134010 ..... 132, 218
134011 ..... 90, 132, 218
134053 218
134056 148
134079 72
134442 ..... 10, 108, 218, 234, 240
134443 218
134445 222
134446 ..... 222, 228
134447 ..... 222, 228
134448 222
134450 222
134451 84
134452 84
134457 222
134458 ..... 84, 228
134523 224
134549 234
134572 74
134602 218
134603 218
134612 ..... 218, 286, 288, 290
134622 10
134623 10
134653 226
134654 226
134655 226
134679 84
134684 226
134705 ..... 54, 108
134706 90
134708 234
134711 224
134713 226
134714 ..... 218, 232
134716 132
134717 ..... 98, 132
134725 218
134727 ..... 12, 88, 90, 106, 218
134728 ..... 86, 90, 132, 218
134729 ..... 12, 88, 90, 106, 218
134730 ..... 86, 134, 218
134748 234
134756 234
134757 108
134758 16
134777 88
134778 88
134782 74
134803 218
134866 234
134929 86
135015 268
135155 ..... 94, 158
135156 140
135224 108
135234 250
135235 ..... 44, 214
135248 ..... 256, 276, 284
135280 52
135296 22

INDEX

135301 ..... 54, 98
135304 142
135312 176
135319 ..... 30, 52
135335 140
135336 6
135337 ..... 8, 12, 34, 36, 40, 78, 94, 98, 100, 124, 130, 138, 152, 174, 196, 204, 216, 218, 236
135369 150
135378 244
135386 176
135443 188
135444 256
135453 38
135460 142
135554 ..... 150, 152, 172, 176, 178, 184, 186, 192
135570 136
135587 ..... 158, 160, 184, 192
135657 ..... 4, 276, 284
135671 38
135691 42
135709 16
135716 ..... 60, 108, 212
135718 ..... 170, 172
135725 ..... 202, 204
135734 ..... 150, 184
135775 ..... 136, 182, 184
135776 192
135778 ..... 172, 182, 184, 192, 200, 250, 274, 282
135779 ..... 274, 282
135780 ..... 192, 200
135781 172
135783 ..... 108, 226
135785 ..... 8, 46, 54, 102, 124, 176, 186, 214
135786 ..... 144, 148, 152, 186, 256
135788 ..... 50, 148, 172, 180, 186, 192, 208, 256
135790 172
135791 ..... 150, 186, 192
135792 150
135793 180
135799 ..... 4, 6, 8, 10, 30, 34, 40, 42, 52, 54, 62, 64, 66, 80, 88, 90, 98, 102, 104, 126, 130, 138, 140, 170, 176, 178, 186, 198, 212, 214, 218, 224, 226, 232, 236, 250, 276, 280, 284, 290, 292, 294
135800 ..... 30, 34, 48
135818 212
135821 ..... 144, 180, 184
135852 ..... 18, 34, 40
135865 ..... 34, 38, 136, 172, 182, 184, 188, 192, 200, 212, 250, 274, 276, 282
135866 ..... 34, 50, 144, 150, 176, 186, 192, 200, 274, 282
135867 ..... 144, 148, 150, 152, 158, 160, 172, 176, 180, 184, 186, 200, 256
135868 ..... 50, 144, 148, 150, 152, 172, 178, 180, 184, 186, 192, 196, 204, 208, 256
135869 ..... 150, 170, 180, 266
135870 46
135889 172
135894 ..... 34, 40
135903 ..... 10, 138
135926 66
135927 ..... 18, 52, 66, 68, 108, 188, 230, 238
135957 ..... 30, 136, 140, 148, 158, 160, 182, 192
135959 ..... 38, 48, 70, 236, 294
136027 142
136036 ..... 6, 94
136089 ..... 148, 180, 200
136095 ..... 38, 182, 192
136097 188
136098 212
136108 ..... 30, 34, 142
136109 60
136110 60
136112 140
136113 32
136122 ..... 2, 30, 38, 158, 160
136124 38
136131 ..... 158, 160
136134 2
136135 42
136141 32
136148 80
136149 34
136151 ..... 4, 46, 236
136157 158
136158 ..... 158, 160
136167 50
136176 76
136177 ..... 70, 72, 138, 272
136178 ..... 6, 12, 62, 64, 66, 88, 108, 130, 138, 224
136183 ..... 138, 140
136188 ..... 8, 54, 56, 98
136195 176
136209 ..... 2, 18, 32, 44, 60, 72, 98, 218, 224
136211 ..... 6, 46, 98
136212 98
136220 ..... 34, 192, 200
136229 230
136238 ..... 276, 284
136239 140
136249 ..... 274, 282
136252 ..... 14, 80, 102
136254 172
136256 196
136257 ..... 180, 186
136258 150
136263 ..... 18, 130, 140
136282 186
136291 ..... 48, 52
136300 ..... 56, 286, 288, 290

136325 ..... 136, 184, 212
136326 188
136327 180
136362 178
136363 ..... 150, 170
136366 ..... 20, 22
136367 ..... 20, 22
136376 20
136385 24
136398 ..... 42, 46
136399 236
136403 180
136404 170
136410 212
136412 266
136413 266
136417 ..... 6, 66
136418 ..... 152, 192, 204
136420 38
136421 212
136422 30
136428 ..... 76, 78
136431 ..... 4, 6, 8, 10, 24, 38, 48, 52, 54, 56, 66, 94, 102, 130, 138, 140, 254, 276, 284
136440 ..... 66, 70, 94, 138
136442 188
136447 ..... 30, 182
136454 ..... 138, 250
136455 22
136460 170
136473 22
136476 32
136480 58
136485 ..... 52, 90, 100, 126, 130, 134, 236, 252
136495 ..... 52, 102
136496 12
136499 144
136501 ..... 144, 152, 204
136506 40
136508 176
136510 176
136524 170
136536 ..... 70, 224, 230, 262
136541 108
136558 142
136561 4
136566 ..... 136, 276
136572 66
136574 ..... 108, 188
136595 ..... 38, 66
136598 ..... 6, 54, 56
136620 46
136630 176
136631 266
136635 220
136638 50
136641 178
136646 50
136647 216
136648 216
136655 ..... 10, 16, 50, 74, 90, 100, 102, 136, 218, 232, 234, 240, 272, 286, 288, 290, 296
136662 10
136696 ..... 86, 272, 286, 296
136704 ..... 54, 56
136707 ..... 82, 106
136708 106
136709 106
136731 ..... 212, 238
136743 ..... 10, 44
136748 224
136767 172
136774 52
136809 ..... 152, 204
136824 66
136832 30
136838 210
136840 210
136846 256
136847 38
136848 38
136869 130
136881 210
136886 ..... 70, 86, 88, 126, 128
137375 150
138473 186
139134 30
139225 104
139292 ..... 4, 6
139722 178
139723 244
139724 38
139971 98
141184 34
141185 34
141186 74
141205 90
141220 214
141224 294
141283 66
141490 296
141492 294
141493 ..... 278, 288
141497 296
141510 246
141513 246
141701 296
141721 294
141736 294
141737 296

INDEX

144505 170
145392 50
148798 ..... 4, 24, 42
148799 ..... 6, 24
148800 ..... 108, 142
149168 254
150595 208
151974 170
152157 130
152192 ..... 4, 6
152193 8
152274 94
152439 4
152519 126
152520 ..... 22, 42
152655 ..... 8, 12, 18, 46, 52, 54, 60, 90, 98, 102, 108, 124, 174, 176, 178, 188, 198, 212, 236, 238
152668 ..... 36, 38, 52, 54, 56, 62, 66, 72, 82, 102, 212, 216, 224, 236, 238, 294
152670 90
152702 ..... 48, 276, 284
152730 6
152732 ..... 34, 40
152775 196
152779 ..... 66, 102, 138, 140
152863 ..... 54, 56
152947 ..... 170, 198
153151 172
153289 140
156848 38
156886 38
158174 ..... 180, 200
158635 30
158658 ..... 86, 272, 286, 296
158704 36
160275 124
160373 100
160414 80
160705 234
161378 130
162102 46
162104 148
162144 46
162212 156
162342 58
162436 ..... 26, 28
162444 60
162446 46
163158 162
163298 246
163310 30
163368 42
163373 34
163745 162
163746 162
163747 162
163753 162
163779 58
163904 58
163957 58
163976 46
166171 140
166234 242
166425 242
166454 242
166457 242
166463 242
166468 ..... 274, 282
166469 ..... 276, 284
166530 94
166539 94
166694 162
166727 244
166824 242
166829 242
166832 242
166834 242
166835 242
166836 242
166837 242
166838 242
166839 242
166843 242
166869 46
166998 16
167502 242
167709 50
167727 246
167884 102
167897 ..... 244, 268
167910 142
172899 ..... 108, 218
173029 ..... 274, 282
173040 ..... 274, 282
173069 ..... 274, 282
173116 ..... 274, 282
173559 ..... 274, 282
173560 ..... 274, 282
173561 ..... 274, 282
173562 ..... 274, 282
173563 ..... 274, 282
173564 ..... 274, 282
173575 ..... 274, 282
173590 ..... 274, 282
173656 ..... 274, 282
174149 214
176334 188
181511 22
183115 230
183150 116

INDEX

183166 136
183199 108
183202 ..... 106, 108
183209 94
183211 268
183258 224
183264 108
183265 108
183273 108
183315 74
183316 ..... 86, 272, 286
183386 106
183387 106
183392 106
183394 106
183395 106
183396 106
183397 106
183398 106
183443 108
183444 108
183448 106
183506 ..... 106, 108
183508 ..... 106, 108
183512 108
183524 150
183525 264
183543 34
183544 106
183602 168
183607 264
183608 264
183609 264
183707 264
183708 264
183709 264
183820 30
183821 30
183905 186
183913 136
183955 144
183957 148
184303 212
184304 212
184305 212
184307 212
184461 ..... 150, 158, 160, 184
184463 ..... 50, 144
184579 130
184583 52
184584 ..... 60, 124
184595 138
184596 8
184612 226
184613 262
184640 ..... 88, 218, 286, 288, 290
184641 ..... 212, 224
184642 ..... 52, 100
184643 ..... 224, 238
184645 216
184646 ..... 72, 102
184648 ..... 34, 124, 216
184649 88
184652 218
184654 ..... 130, 138, 260
184655 124
184656 130
184657 ..... 8, 10, 186, 238, 280, 290, 292
184658 ..... 90, 140, 176, 178
184659 140
184661 88
184662 ..... 4, 6, 8, 34, 138
184664 ..... 4, 8, 30, 40, 42, 138, 140
184665 ..... 8, 30, 46
184667 6
184669 140
184673 ..... 38, 140
184675 138
184679 42
184682 82
184683 36
184687 ..... 8, 124, 130, 138, 262
184688 ..... 6, 54, 126, 260
184692 90
184694 ..... 130, 138
184701 ..... 12, 70, 88
184705 218
184706 ..... 62, 66, 70, 82, 106
184708 ..... 16, 80, 218
184709 ..... 6, 8
184711 ..... 30, 46, 48, 54, 142, 230
184712 178
184714 8
184717 42
190752 ..... 54, 152, 204, 216
191489 ..... 12, 94, 130
191705 ..... 34, 192
194026 208
194033 206
194082 ..... 80, 90
197171 ..... 36, 100, 126
197224 12
197229 36
197230 ..... 36, 70, 82, 88, 138, 140, 272, 286, 288, 290
200114 42
200139 42
200273 50
200402 60
200585 234
200586 234

INDEX

200653 8
200699 10
200780 ..... 52, 74, 90
200783 96
200784 96
200890 96
200974 ..... 50, 88, 132, 140
201149 ..... 136, 140
201224 136
201299 130
201396 ..... 224, 238
201401 78
201408 218
201434 50
201488 110
201516 ..... 144, 146
201522 80
201523 ..... 148, 156
201589 104
201590 104
201595 98
201596 98
201598 ..... 54, 56
201622 20
201623 20
201638 50
201647 140
201648 140
201693 98
201701 136
201705 136
201707 80
201710 80
201711 178
201713 ..... 178, 270
201716 104
201722 206
201723 206
201732 ..... 202, 204
201733 206
201734 208
201735 208
201736 206
201737 206
201738 194
201739 194
201746 104
201750 80
201757 90
201759 194
201760 100
201762 ..... 202, 204
201763 ..... 202, 204
201828 74
201832 208
201835 208
201836 24
201838 90
201845 206
201859 90
201861 24
201886 90
201888 70
201948 108
202014 140
202015 140
202022 140
202041 98
202075 ..... 188, 190, 192
202189 104
202230 88
202264 100
202268 ..... 274, 282
202269 ..... 276, 282
202274 108
202275 108
202325 50
202446 46
202455 50
202456 130
202487 48
202492 124
202505 124
202515 124
202569 124
202584 100
202586 100
202604 90
202646 186
202654 130
202661 20
202714 196
202721 88
202732 60
202734 60
202779 124
202781 124
202783 124
202785 124
202827 42
202835 42
202838 42
202888 148
202896 22
202898 22
202903 206
202946 ..... 4, 8
202956 150
202991 196
202995 42

INDEX

203017 108
203018 108
203019 126
203020 124
203022 126
203029 124
203048 146
203098 48
203108 46
203132 216
203150 198
203151 56
203152 54
203153 54
203154 56
203187 4
203192 6
203201 6
203202 16
203204 238
203211 6
203213 6
203277 136
203293 44
203294 44
203295 60
203302 16
203337 ..... 172, 180
203340 ..... 178, 184
203350 ..... 4, 8
203373 48
203380 216
203389 54
203401 124
203402 16
203442 154
203501 136
203504 136
203505 136
203508 136
203509 136
203518 130
203543 124
203547 102
203548 102
203549 102
203550 88
203551 88
203554 42
203572 208
203573 208
203574 208
203578 16
203580 16
203584 16
203596 108
203597 108
203643 46
203647 216
203654 ..... 148, 154
203777 48
203817 38
203847 98
203860 98
203876 180
203927 60
203929 60
203930 230
203937 210
203940 198
203941 60
203966 212
203967 212
203972 250
203974 212
203975 212
203977 172
203978 172
203979 212
203984 212
204007 130
204010 130
204014 168
204018 16
204024 16
204025 16
204055 44
204080 10
204094 14
204097 14
204098 14
204101 14
204102 46
204174 130
204184 90
204187 130
204235 42
204354 136
204373 100
204374 100
204379 100
204429 20
204443 254
204538 20
204553 50
204568 10
204604 46
204656 48
204732 48
204748 124

INDEX

204760 210
204769 ..... 286, 288, 290, 296
204781 80
204784 50
204787 ..... 80, 104
204822 48
204847 196
204956 234
205009 26
205028 ..... 42, 270
205029 ..... 42, 270
205036 194
205065 80
205070 ..... 54, 56
205071 ..... 54, 56
205092 ..... 274, 282
205097 46
205125 ..... 148, 152
205159 50
205188 ..... 162, 166
205190 90
205191 90
205195 100
205201 50
205211 80
205213 ..... 202, 204
205242 60
205262 90
205263 16
205269 50
205273 212
205279 16
205317 ..... 202, 204
205325 222
205356 212
205366 42
205374 54
205396 74
205397 ..... 26, 28
205441 64
205442 110
205456 106
205473 10
205483 ..... 276, 282
205486 234
205572 100
205579 88
205592 ..... 272, 286, 296
205595 ..... 86, 272, 286
205598 ..... 86, 272, 286, 296
205600 ..... 272, 286
205614 66
205666 50
205739 100
205764 ..... 274, 282
205890 80
205892 80
205929 80
205936 30
205937 30
205939 30
205948 80
205950 94
205974 30
205979 30
206038 30
206040 128
206042 124
206060 172
206061 172
206065 258
206066 100
206071 80
206114 60
206116 58
206121 60
206160 34
206184 210
206192 214
206193 214
206194 214
206195 214
206196 214
206208 212
206248 98
206258 34
206324 34
206340 ..... 34, 38
206350 34
206424 260
206432 260
206434 8
206447 258
206451 ..... 272, 286, 296
206454 124
206459 112
206466 10
206482 ..... 10, 240
206548 38
206550 38
206559 38
206560 38
206562 38
206569 202
206592 60
206593 60
206609 142
206611 16
206623 210
206661 ..... 34, 38

206665 64
206679 50
206680 50
206709 4
206728 ..... 202, 204
206771 132
206772 132
206773 132
206774 132
206775 132
206776 132
206777 132
206778 244
206779 132
206780 132
206781 244
206783 132
206784 132
206785 132
206850 196
206863 262
206878 196
206896 50
206897 50
206899 50
206946 94
206966 124
207062 ..... 78, 112
207075 42
207087 244
207101 42
207128 80
207135 80
207145 128
207148 88
207149 88
207154 48
207166 48
207172 48
207191 88
207192 46
207209 100
207210 100
207212 244
207219 36
207225 106
207230 90
207233 136
207248 244
207250 136
207256 64
207257 64
207284 50
207286 232
207287 232
207288 232
207289 234
207291 90
207294 10
207295 240
207296 240
207304 234
207329 64
207346 ..... 150, 172
207347 178
207362 ..... 4, 6
207374 10
207378 16
207395 226
207400 90
207401 90
207406 ..... 26, 28
207409 26
207410 26
207414 42
207424 48
207425 212
207426 212
207427 172
207430 66
207435 46
207437 234
207445 14
207446 212
207447 50
207450 50
207452 50
207454 214
207455 214
207456 234
207457 ..... 108, 234
207458 178
207503 16
207504 16
207506 16
207510 16
207511 16
207534 14
207536 14
207539 124
207554 88
207558 218
207570 88
207580 130
207585 2
207587 8
207592 10
207601 244
207615 2
207616 2

INDEX

207617 2
207618 2
207619 2
207620 2
207621 2
207638 46
207646 36
207699 20
207709 98
207713 24
207727 66
207761 4
207763 4
207783 24
207807 146
207816 244
207817 244
207818 244
207819 244
207821 ..... 274, 282
207822 ..... 274, 282
207829 140
207830 140
207840 244
207841 244
207856 238
207868 64
207869 64
207870 64
207894 142
207899 58
207903 234
207904 16
207906 42
207914 130
207933 244
207949 296
207956 ..... 286, 288, 290
207957 ..... 272, 278, 280
207961 16
207962 16
207963 42
207970 70
207988 10
207993 234
208010 128
208013 128
208014 128
208015 128
208016 128
208019 34
208020 34
208034 246
208038 ..... 114, 116
208040 ..... 114, 116
208041 ..... 118, 120
208042 114
208043 118
208044 114
208045 118
208046 114
208047 118
208048 114
208049 ..... 114, 118
208050 ..... 114, 118
208051 ..... 114, 118
208052 ..... 114, 116
208053 ..... 118, 120
208054 118
208055 ..... 118, 120
208056 ..... 118, 120
208057 ..... 118, 120
208058 ..... 118, 120
208059 114
208060 118
208061 ..... 114, 118
208062 ..... 118, 120
208063 118
208064 ..... 118, 120
208073 234
208074 234
208075 108
208083 94
208089 100
208097 122
208098 122
208100 122
208102 122
208107 88
208109 106
208110 106
208111 106
208112 106
208114 106
208118 30
208124 98
208125 98
208126 ..... 114, 118
208134 98
208135 98
208144 98
208145 98
208158 ..... 226, 228
208160 ..... 80, 84
208167 148
208174 172
208179 106
208180 106
208181 106
208182 106

INDEX

208184 106
208185 106
208189 100
208190 100
208191 80
208192 ..... 78, 110
208216 142
208238 88
208239 88
208245 80
208254 98
208255 98
208262 2
208268 254
208276 186
208277 186
208278 186
208282 148
208284 148
208292 104
208321 64
208325 214
208330 158
208337 262
208340 2
208363 162
208371 88
208372 262
208397 262
208406 262
208411 196
208413 172
208424 156
208451 162
208452 162
208453 162
208462 162
208463 162
208464 162
208465 162
208466 162
208467 162
208468 162
208473 154
208484 176
208486 176
208487 176
208502 70
208503 70
208504 70
208506 56
208507 56
208508 56
208509 54
208510 54
208512 54
208513 54
208521 50
208523 52
208528 ..... 54, 56
208529 ..... 54, 56
208530 52
208531 54
208533 54
208541 56
208542 176
208547 54
208551 176
208552 176
208553 54
208554 56
208555 56
208556 ..... 54, 56
208562 62
208576 46
208579 210
208611 6
208637 ..... 136, 272
208650 ..... 274, 282
208664 30
208667 38
208685 80
208686 24
208687 24
208719 66
208740 168
208741 168
208742 168
208743 168
208744 168
208745 168
208746 168
208747 168
208748 168
208751 168
208752 168
208758 16
208759 16
208763 244
208769 218
208770 124
208783 ..... 130, 132
208784 106
208806 124
208807 244
208808 132
208810 132
208811 132
208812 298
208815 ..... 286, 288, 290

INDEX

208845 248
208860 62
208876 246
208877 246
208894 ..... 136, 272
208895 ..... 136, 272
208900 244
208917 14
208919 158
208920 246
208961 270
208973 22
208979 22
208989 132
209013 226
209018 ..... 188, 234
209032 ..... 108, 188
209044 190
209045 ..... 182, 190
209063 172
209069 ..... 152, 204
209104 ..... 152, 204
209109 ..... 152, 204
209209 130
209225 46
209287 42
209374 142
209385 140
209388 34
209389 34
209393 34
209410 38
209411 ..... 272, 286
209422 296
209476 88
209520 46
209521 124
209570 132
209571 132
209584 262
209598 142
209613 98
209643 10
209650 6
209681 10
209688 68
209689 262
209693 10
209697 130
209712 24
209719 ..... 4, 8
209722 8
209736 234
209746 234
209747 234
209754 234
209770 246
209782 172
209787 98
209789 34
209790 34
209792 70
209802 72
209803 72
209811 6
209812 186
209813 50
209816 2
209833 10
209836 254
209837 254
209841 90
209856 70
209865 38
209867 16
209899 10
209904 ..... 4, 8
209917 88
209918 80
209924 136
209929 230
209930 102
209931 102
209932 ..... 4, 8
209933 4
209946 224
209947 62
209949 62
209950 ..... 176, 182
209951 182
209972 48
209979 38
209989 102
209991 102
209997 48
220478 212
220908 ..... 180, 190
232233 196
232271 92
232659 36
243541 172
243604 174
243615 172
243632 172
243637 172
243905 172
243906 172
243995 170
248643 36
252170 90

INDEX

252178 74
252179 88
252189 90
252190 176
252200 130
252201 88
252203 ..... 14, 82
252206 170
252234 82
252235 80
252236 80
252237 74
252244 ..... 158, 160
252247 ..... 90, 106
252254 80
252263 ..... 158, 160
252270 124
252284 ..... 62, 64
252292 8
252318 180
252319 ..... 182, 190
252320 190
252321 190
252322 180
252323 184
252324 ..... 192, 200
252325 ..... 180, 192
252327 ..... 180, 192
252330 200
252331 190
252332 190
252333 190
252334 190
252336 190
252337 190
252338 180
252339 ..... 182, 190
252340 190
252341 190
252342 190
252343 ..... 182, 190
252344 190
252345 190
252347 ..... 180, 192
252348 ..... 180, 192
252349 190
252350 ..... 182, 190
252352 ..... 190, 200
252353 190
252354 190
252355 ..... 180, 190
252356 184
252357 180
252358 190
252359 182
252360 ..... 182, 190
252361 ..... 182, 190
252363 180
252364 190
252365 140
252376 154
252381 154
252382 154
252383 154
252384 154
252385 154
252386 154
252387 154
252388 154
252389 154
252391 154
252396 262
252533 22
252561 244
252585 82
252613 88
252662 188
252667 52
252698 148
252705 264
252706 134
252707 134
252708 134
252807 ..... 76, 78
252934 250
252940 250
252968 90
253635 170
253783 174
253905 170
271083 10
271094 8
271146 10
271184 10
271208 6
271238 10
271251 8
271254 8
271271 10
279003 50
279150 4
291025 6
291028 244
291030 ..... 4, 8
291038 102
291054 ..... 286, 288, 290
291073 70
291113 102
291114 72
291131 222

INDEX

291158 14
291159 14
291160 14
291161 14
291162 14
291192 24
291203 244
291215 6
291262 218
291264 104
291268 ..... 54, 56
291378 244
291411 244
291430 94
291464 112
291465 244
291484 36
291485 36
291486 80
291487 80
291489 80
291490 80
291503 80
291527 20
291583 74
291584 74
291589 180
291608 62
291609 62
291610 294
291629 262
291630 262
291675 206
291724 102
291795 64
291796 64
291799 62
291937 64
293037 226
293038 226
293041 226
293042 226
293129 80
294263 256
299820 256
299822 256
299898 256
302204 244
306001 130
306007 218
306012 86
306013 86
306024 62
306074 296
306077 140
306097 ..... 86, 296
306106 30
306113 142
306118 244
306119 60
306120 60
306122 ..... 258, 260
306166 ..... 198, 200
306170 ..... 158, 160, 168
306177 86
306179 242
306180 242
306181 242
306182 78
306192 30
306193 30
306248 188
306252 188
306255 4
306267 136
306271 136
306272 ..... 148, 152
306320 238
306323 ..... 152, 216
306346 252
306347 252
306351 252
306359 ..... 148, 152
306360 130
306365 244
306386 ..... 158, 162
306393 162
306394 162
306395 162
306410 268
306417 244
306423 38
306426 38
306450 218
306453 80
306465 78
306504 108
306511 234
306515 234
306522 ..... 104, 106
306523 106
306528 146
306539 100
306579 4
306596 98
306600 96
306601 96
306602 96
306616 74
306617 74

306620 50
306647 60
306670 162
306671 162
306672 162
306673 162
306692 94
306756 242
306796 50
309023 74
309024 296
309028 296
309032 74
309034 292
309035 292
309037 ..... 280, 290, 292
309043 292
309044 292
309045 ..... 280, 290
309046 74
309053 292
309056 74
309057 290
309058 184
310001 10
310119 70
310120 70
310366 ..... 160, 166
310556 28
310634 106
310661 166
310662 166
310663 166
310666 166
310667 166
310668 166
310669 166
310670 166
310672 166
310674 166
310675 166
310676 166
310677 166
310678 166
310681 166
310682 166
310683 166
310684 166
310685 166
310686 166
310687 166
310688 160
310689 244
310704 48
310818 60
310880 4
310883 8
310932 234
320081 208
320082 208
320126 188
320200 160
320202 ..... 150, 152
320206 46
320238 ..... 150, 152
320326 180
320360 ..... 170, 270
320391 ..... 276, 284
346060 ..... 114, 118
346061 122
346132 96
346208 244
346230 130
346232 130
346254 ..... 110, 122
346255 ..... 112, 122
346256 ..... 110, 114
346257 ..... 112, 118
500470 ..... 90, 132, 218, 234

B

B5238 298
B5240 298
B5995 ..... 272, 274
B5996 286
B6012 26
B6013 26
B6016 24
B6047 258
B6048 298
B6053 254
B6054 254
B6055 262
B6106 260
B6277 266
B6601 ..... 278, 282
B6602 288
B6617 250
B6834 28
B6889 78
B6979 252
B9004 292
B9005 292
B9020 256
B9031 290
B9032 ..... 280, 282

MacDon

CUSTOMERS
MacDon.com

DEALERS
Portal.MacDon.com

Trademarks of products are the marks of their respective manufacturers and/or distributors.

Printed in Canada