FD2 Series FlexDraper® Header with FM200 Float Module

Parts Catalog

215940 Revision A

Original Instruction

Featuring MacDon FLEX-FLOAT Technology®

The Harvesting Specialists.

FD2 Series FlexDraper® Header with FM200 Float Module

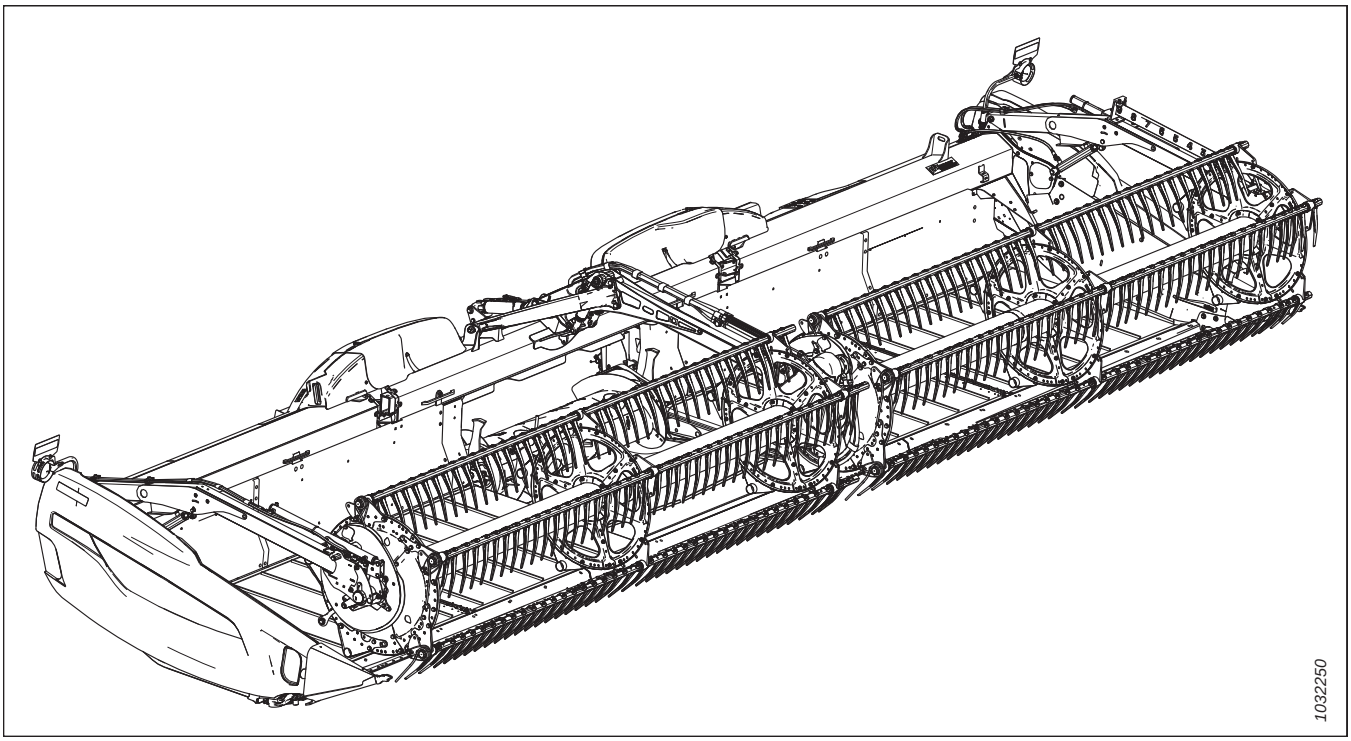

Published: August 2022

NOTE:

Keep your MacDon publications up-to-date. The most current English version can be downloaded from our website (*www.macdon.com*) or from our Dealer-only site (*https://portal.macdon.com*) (login required).

Czech, French, German, Portuguese, Russian, and Spanish translations of this manual can be ordered from MacDon, downloaded from the MacDon Dealer Portal (*https://portal.macdon.com*) (login required), or downloaded from the MacDon website (*http://www.macdon.com*).

© 2022 MacDon Industries, Ltd.

The information in this publication is based on the information available and in effect at the time of printing. MacDon Industries, Ltd. makes no representation or warranty of any kind, whether expressed or implied, with respect to the information in this publication. MacDon Industries, Ltd. reserves the right to make changes at any time without notice.

Introduction

This Parts Catalog lists all the replacement parts that can be ordered for a MacDon FD2 Series FlexDraper® Combine Header (Sections 1–149) and a FM200 Float Module (Sections 150–217).

When ordering, be sure the complete and proper part number is given. Some parts vary with header size; be sure you are ordering the correct part number for your unit.

Bold text is used to indicate updates made at the current revision level. With each new revision of the catalog, previous revisions are returned to regular text.

Electrical connectors used on MacDon products are available for sale but not listed in this catalog. For the list of available connectors, refer to the Electrical Connectors Parts Catalog (MD #169641).

In this catalog, right and left are determined from the operator's seated position in the combine. An arrow is sometimes used in illustrations to indicate forward position.

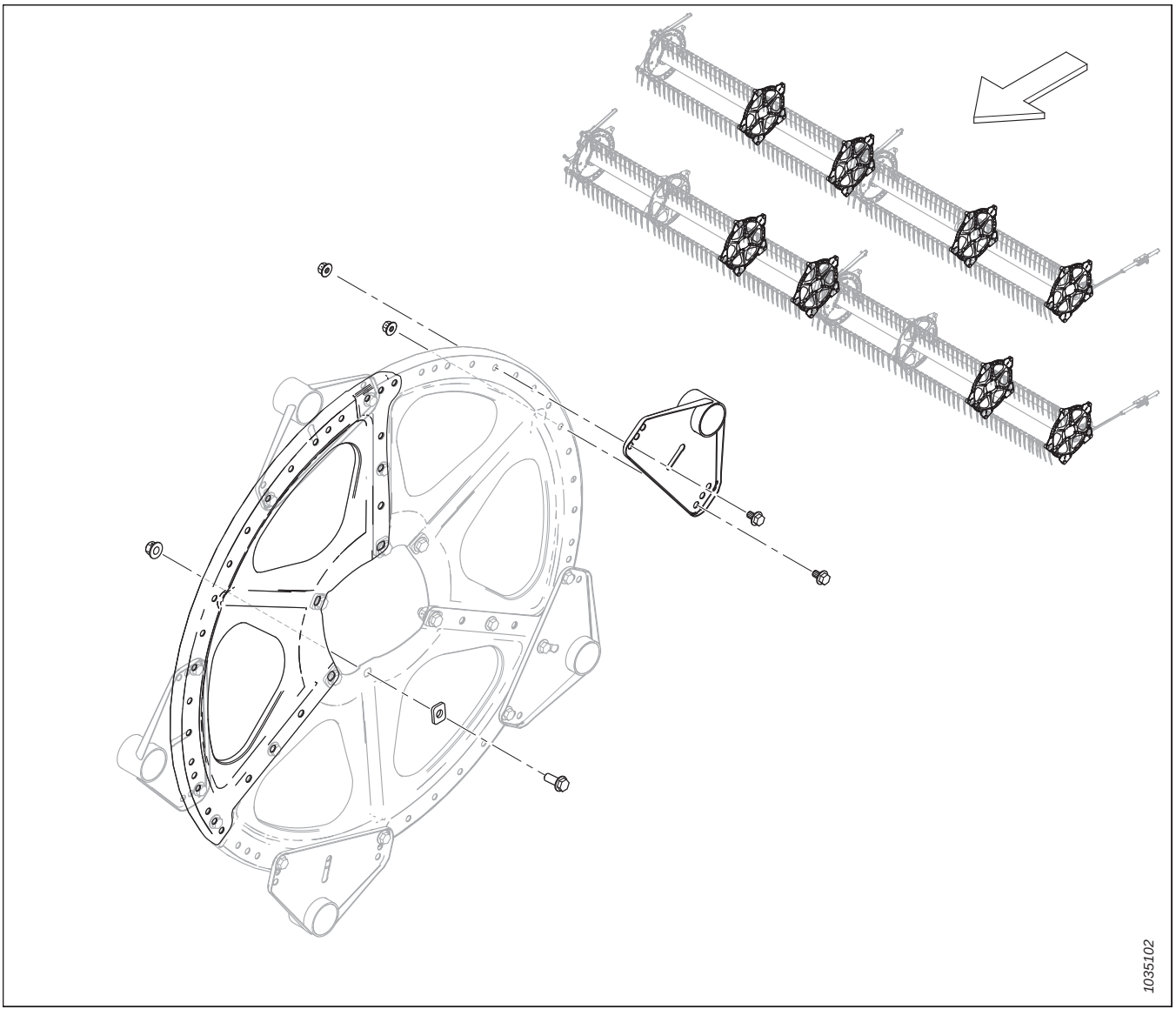

Abbreviations

A/R – as required (quantity varies)	ASSY – assembly	BHRN – button head rib neck
BV – ball valve	CCW – counterclockwise	CON – conical (spring washer)
CSK – countersink	C/W – complete with	CW – clockwise
DBLE – double	DK – double knife	DR – double reel
DT – distorted thread	FLG – flange	GA – gauge
GR – grade	GS – grass seed	HD – head
HDR – header	HFA – hydraulic fore-aft	HH – hex head
HNBR – hydrogenated nitrile butadiene rubber	HYD – hydraulic	I.D. – inside diameter
IP – internal plus (torx plus)	KP – knife pressure	KR – knife return
LG – long	LH – left hand (determined from Operator's position, facing forward)	LK – lock
MACH – machine	MD – MacDon	MFA – manual fore-aft
MY – model year	NC – national coarse thread	NF – national fine thread
NSS – not sold separately	NT – narrow transport	O.D. – outside diameter
OPT – optional	PO – pilot operated	PT – pull-type (mower conditioner)
RC – roller chain	REF – reference, part number called up elsewhere in catalog	REG – regular
RH – right hand (determined from Operator's position, facing forward)	RHSN – round head, square neck or square neck carriage bolt	RHSSN – round head, short, square neck
RTD – rotating tine drum	SAE – Society of Automotive Engineers (part produced to comply with)	SD – side draper
SER – serrated	SK – single knife	SKT HD – socket head
SMTH – smooth	SMV – slow moving vehicle	SOCK – socket
SP – self-propelled (windrower) header	SPCL – special	SPH – spherical
SPI – serrations per inch (knife Sections)	SR – single reel	STL – steel (stainless)
STR – standard	STVR – Stover	TFL – thread full length
THD – thread	TR – triple reel	UCA – upper cross auger
UDK – untimed double knife	UNC – unified coarse thread	UNEF – unified extra fine thread
UNF – unified fine thread	UNS – unified special thread series	VK – veritcal knife
WF – wide frame	ZP – zinc plated	

Serial Number Breaks

The side of the serial number on which the dash (–) appears determines whether the part is used "up to" or "after" the serial number given.

Example:

- –451189 Used on machines up to and including serial number 451189
- 451190– Used on machines including and after serial number 451190

Summary of Changes – FD2 Series and FM200 (215940 Rev. A)

This list covers changes made since the last revision (215550 Rev. B).

Section	Summary of Change	Internal Use Only
2 Header Frame End Panels, page 3	Superseded end panels 313492 and 313498 with end panels 340306 and 340318; added insulators 340193 and plates 340215, removed washers 30632. Superseded header adjuster tool 258781 with header adjuster tool kit 360361. Replaced bolt 136151 with screw 136640. Updated illustration from 1034729 to 1039294 to show changes.	ECN 61858
	Added footnotes to insulator 340193 and plate 340215 for clarity.	Parts
3 Manual Case, Retaining Pin, and Knife Storage, page 5	Superseded manual case support 313911 with support 360175. Updated illustration from 1034741 to 1039340 to show changes.	ECN 62511
	Added FD225 manual case support 360176 and bolt 136151. Updated illustration from 1039340 to 1039364 to show changes.	ECN 62506
	Removed Torx socket 164009 from parts list and illustration. Socket 164009 has been discontinued and is no longer shipped with the manual cases.	ECN 62840
6 Divider Rods and Storage, page 11	Superseded rod storage support 289715 with support 360127.	ECN 62410
7 Endshields – MacDon, page 13	Replaced black endshields 313611 and 313612 with endshields 360554 and 360555; added 230 mm red reflector 165524 to the parts list. Replaced red endshields 313613 and 313614 with endshields 360552 and 360448, refer to Section *8 Endshields – Case, page 15*.	ECN 62781
8 Endshields – Case, page 15	Added new section for Case endshields with new illustration 1039649.	ECN 62781
9 Endshields – New Holland, page 17	Added new section for New Holland endshields with new illustration 1039650.	ECN 62781
11 Draper, page 21	Added 25-foot draper kit 319088 to the parts list.	ECN 62089
12 Draper – Backsheet Panels (FD225), page 23	Added new section for FD225 backsheet panels with new illustration 1039393.	ECN 62089
13 Draper – Backsheet Panels (FD230, FD235, FD240, and FD241), page 25	Added backsheet support 319375. Replaced screw 320190 with screw 320290. Updated illustration from 1031196 to 1039169 to show changes.	ECN 60128
	Superseded inboard support 275575 with inboard support 319366, added a footnote for clarity. Replaced screw 136209 with screw 101897. Replaced washer 30632 with washer 18637.	ECN 60153
	Superseded backsheet support 319375 with 360509, added screw 320190 to secure the support to the backsheet. Updated illustration 1039169 to show changes.	ECN 63190
14 Draper – Backsheet Panels (FD245 and FD250), page 27	Superseded inboard support 275575 with inboard support 319366, added a footnote for clarity. Replaced screw 136209 with screw 101897. Replaced washer 30632 with washer 18637.	ECN 60153
	Replaced screw 320190 with screw 320290.	ECN 60128
	Superseded backsheet support 319375 with 360509, added screw 320190 to secure the support to the backsheet. Updated illustration from 1036708 to 1039455 to show changes.	ECN 63190

Section	Summary of Change	Internal Use Only
15 Draper – Tensioner, page 29	Superseded idler roller arms 275248 (RH) and 275899 (LH) with idler roller arms 319708 (RH) and 319707 (LH). Updated illustration from 1034762 to 1039330 to show changes.	ECN 62838
	Corrected quantities throughout the list; some quantities reflected only one side of the header, while others reflected quantities for both sides of the header.	Publications
17 Draper – Decks and Tracks (FD225), page 33	Added new section for FD225 draper decks and tracks with new illustration 1039398.	ECN 62013 ECN 62089
18 Draper – Decks and Tracks (FD230, FD235, FD240, and FD241), page 35	Replaced screw 320190 with screw 320290.	ECN 60128
	Added standard plastic track 360841, short plastic track 360150, angled plastic track 360151, draper track shim 340681, and bolt 136824. Added footnotes and serial number breaks for clarity. Updated illustration from 1031198 to 1039401 to show changes.	ECN 62013
19 Draper – Decks and Tracks (FD245 and FD250), page 37	Added standard plastic track 360841, angled plastic track 360151, draper track shim 340681, and bolt 136824. Added footnotes and serial number breaks for clarity. Updated illustration from 1036725 to 1039407 to show changes.	ECN 62013
20 Draper – Seals (FD225), page 39	Added new section for FD25 draper seals with new illustration 1039420.	ECN 62007
21 Draper – Seals (FD230, FD235, and FD240), page 41	Replaced rivnut 320204 with rivnut 320448.	ECN 63022
22 Draper – Seals (FD241, FD245, and FD250), page 43	Replaced rivnut 320204 with rivnut 320448.	ECN 63022
24 Balance Linkage, page 47	Superseded compression link tube 229553 with tube 319474.	ECN 61079
	Added FD225 bellcrank 335851 and FD225 balance channel plate 340672 to the parts list.	ECN 62010
	Superseded flex pin keeper plate 229050 with plate 330622. Updated illustration from 1036479 to 1039339 to show changes.	ECN 63065
26 Flex Linkage Shield – Single Reel (FD225) and Double Reel (FD230, FD235, FD240, and FD241), page 55	Updated the chapter title to include single reel (FD225).	Matrix 360177
	Superseded flex position gauge 258982 with flex position gauge 360299.	ECN 62811
	Superseded shield mounting bracket 283704 with shield bracket assembly 323773. Replaced nyloc nuts 252807 with rivnuts 320448, replaced bolt 152655 with screw 320336. Updated illustration from 1038754 to 1039358 to show changes.	ECN 62924
27 Flex Linkage Shield – Triple Reel (FD240), page 57	Superseded flex position gauge 258982 with flex position gauge 360299.	ECN 62811
	Superseded shield mounting bracket 283704 with shield bracket assembly 323773. Replaced nyloc nuts 252807 with rivnuts 320448, replaced bolt 152655 with screw 320336. Updated illustration from 1038755 to 1039359 to show changes.	ECN 62924
28 Flex Linkage Shield – Triple Reel (FD245 and FD250), page 59	Superseded flex position gauge 258982 with flex position gauge 360299.	ECN 62811
	Superseded shield mounting bracket 283704 with shield bracket assembly 323773. Replaced nyloc nuts 252807 with rivnuts 320448, replaced bolt 152655 with screw 320336. Updated illustration from 1038920 to 1039360 to show changes.	ECN 62924

Section	Summary of Change	Internal Use Only
29 Guards, Hold-Downs, and Cutterbar Shoes – Single Knife, Pointed (FD225, FD230, FD235, and FD240), page 61	Updated the chapter title to include FD225 and revised footnotes to include FD225 quantities. Added 25-foot SK pointed guards kit 286668 to the parts list.	Matrix 360177 SPEC 286364
31 Guards, Hold-Downs, and Cutterbar Shoes – Single Knife, PlugFree™ (FD225, FD230, FD235, and FD240), page 65	Updated the chapter title to include FD225 and revised footnotes to include FD225 quantities. Added 25-foot SK PlugFree guards kit 286679 to the parts list.	Matrix 360177 SPEC 286365
33 Knives – Single-Knife Headers, Coarse-Tooth Sections (FD225), page 69	Added new section for FD225 knives with new illustration 1039416.	Matrix 360177
35 Knives – Double-Knife Headers, Coarse-Tooth Sections (FD235 and FD240), page 73	Superseded RH coarse knife tail segments 286569 and 286570 with 286865 and 286866. Superseded DK coarse knife kits 286604 and 284605 with kits 286886 and 286887. Superseded coarse center kit 286473 with kit 286861. Superseded fine center kit 286474 with kit 286862. Superseded ultra coarse center kit 286635 with kit 286863. Updated illustration from 1031992 to 1039750 to show fourth top countersunk section on the right tail knife segment.	ECN 62803
36 Knives – Double-Knife Headers, Coarse-Tooth Sections (FD241), page 77	Superseded RH coarse knife tail segment 286570 with 286866. Superseded DK coarse knife kit 286606 with kit 286888. Superseded coarse center kit 286473 with kit 286861. Superseded fine center kit 286474 with kit 286862. Superseded ultra coarse center kit 286635 with kit 286863. Updated illustration from 1032766 to 1039751 to show fourth top countersunk section on the right tail knife segment.	ECN 62803
37 Knives – Double-Knife Headers, Coarse-Tooth Sections (FD245), page 81	Superseded RH coarse knife tail segment 286571 with 286867. Superseded DK coarse knife kit 286607 with kit 286889. Superseded coarse center kit 286473 with kit 286861. Superseded fine center kit 286474 with kit 286862. Superseded ultra coarse center kit 286635 with kit 286863. Updated illustration from 1034987 to 1039752 to show fourth top countersunk section on the right tail knife segment.	ECN 62803
38 Knives – Double-Knife Headers, Coarse-Tooth Sections (FD250), page 85	Superseded RH coarse knife tail segment 286572 with 286868. Superseded DK coarse knife kit 286608 with kit 286890. Superseded coarse center kit 286473 with kit 286861. Superseded fine center kit 286474 with kit 286862. Superseded ultra coarse center kit 286635 with kit 286863. Updated illustration from 1031993 to 1039753 to show fourth top countersunk section on the right tail knife segment.	ECN 62803
44 Reel Support Arm and Lift Cylinders – Outer Arms, Single Reel, page 99	Added new section with new illustration 1039370.	ECN 62041 ECN 62634
45 Reel Support Arm and Lift Cylinders – Outer Arms, Double and Triple Reel, page 101	Revised footnote on arm 311949; superseded reel entanglement decal 313726 with decal 360541.	ECN 63008
46 Reel Arm Components – Right Arm, Single Reel (FD225), page 103	Added new section with new illustration 1039863.	Matrix 360177 ECN 61201

Section	Summary of Change	Internal Use Only
51 Reel Arm Components – Left Arm (FD225, FD230, FD235, FD240, FD241, FD245, and FD250), page 113	Updated the chapter title to include FD225.	Matrix 360177
52 Reel – Drive, Right Arm, Single Reel, page 115	Added new section with new illustration 1039676.	Matrix 360177 ECN 61201
53 Reel – Drive, Center Arm, Double Reel and Triple Reel, page 119	Updated the chapter title for clarity.	Tech Pubs
56 Reel – Tine Tube, page 127	Added FD225 narrow tine tubes 360201 and wide tine tubes 360199. Revised footnotes and quantities throughout to include FD225 quantities. Updated illustration from 1032268 to 1039687 to show single-reel header configuration.	ECN 61201 ECN 62546
	Revised descriptions and footnotes on crank arms 228319 and 273877 for clarity.	Engineering Product Support
	Superseded LH plastic fingers 311524 (package of 10) with LH plastic fingers 360540 (package of 10).	ECN 62722
57 Reel Discs – Cam End and Linkage (FD225, FD230, FD235, FD240, FD241, FD245, and FD250), page 131	Updated the chapter title to include FD225. Updated illustration from 1032208 to 1039689.	ECN 61201
58 Reel Discs – Mid Span, Cam Side (FD225, FD235, FD240, FD241, FD245, and FD250), page 133	Updated the chapter title to include FD225. Updated illustration from 1032209 to 1039691.	ECN 61201
59 Reel Discs – Mid Span, Tail Side (FD225, FD230, FD235, FD240, FD241, FD245, and FD250), page 135	Updated the chapter title to include FD225. Updated illustration from 1038905 to 1039693.	ECN 61201
60 Reel Discs – Tail End (FD225, FD230, FD235, FD240, FD241, FD245, and FD250), page 137	Updated the chapter title to include FD225. Updated illustration from 1038904 to 1039695.	ECN 61201
61 Reel – Center Tubes, Single Reel, page 139	Added new section for FD225 reel center tube with new illustration 1039380.	ECN 62770
68 Skid Shoes – End and Center, page 153	Added footnotes for FD225 quantities.	ECN 62090
71 Hydraulics – Knife Drive, Single and Double Knife, Left Side (FD225, FD230, FD235, FD240, FD241, and FD245), page 159	Updated the chapter title to include FD225. Added FD225 hydraulic lines 283231, 283232, and 283233. Updated footnotes throughout to include FD225 quantities.	ECN 62040
75 Hydraulics – Draper Drive (FD225, FD230, FD235, FD240, and FD241), page 173	Updated the chapter title to include FD225.	ECN 62040
77 Hydraulics – Lift and Fore-Aft, Single Reel, Left Arm (FD225), page 177	Added new section for FD225 lift and fore-aft hydraulics with new illustration 1039571.	ECN 62042

Section	Summary of Change	Internal Use Only
78 Hydraulics – Lift and Fore-Aft, Single Reel, Right Arm (FD225), page 179	Added new section for FD225 lift and fore-aft hydraulics with new illustration 1039580.	ECN 62042
87 Hydraulics – Upper Cross Auger, page 201	Added FD225 UCA hydraulics bundle B7338 to the parts list.	ECN 62040
	Added FD225 hydraulic lines 323354 and 323354 to the parts list.	ECN 63026
88 Hydraulics – Reel Drive, Single Reel, page 203	Added new section for FD225 single-reel drive hydraulics with new illustration 1039593.	ECN 62042 ECN 62899
89 Hydraulics – Reel Drive, Double and Triple Reel, page 205	Revised the chapter title for clarity. Superseded hydraulic lines 283089 and 283090 with lines 323428 and 323429, added reel drive steel lines kit 323808 to service previous production.	ECN 62899
90 Hydraulics – ContourMax™, Contour Wheels (FD225 and FD230), page 207	Added FD225 ContourMax Plumbing Package bundle B7340 to the parts list.	ECN 62040
	Added FD225 hydraulic lines 323350, 323351, 323352, and 323353 to the parts list.	ECN 63026
93 Hydraulics – VertiBlade™ Vertical Knife (FD225, FD230, FD235, FD241, and FD245), page 217	Added FD225 VertiBlade Plumbing Package bundle B7339 to the parts list.	ECN 62040
	Added FD225 hydraulic lines 323826, 323827, 323828, and 323829 to the parts list.	ECN 63026
95 Hydraulic Line Covers (FD225) , page 223	Added new section with new illustration 1039344.	ECN 62009 ECN 62924
96 Hydraulic Line Covers (FD230, FD235, and FD240), page 225	Reversed part numbers for items #2 and #4; long plastic hydraulic cover should be 323172 and LH hydraulic manifold cover should be 283963.	Publications
	Superseded LH hydraulic manifold cover 283693 with cover 323795. Superseded cover mounting connector bracket 311513 with connector bracket assembly 323722. Removed locknuts and added rivnuts 320448, replaced bolt 152655 with screw 320336. Updated illustration from 1038752 to 1039348 to show changes.	ECN 62924
97 Hydraulic Line Covers (FD241, FD245, and FD250), page 227	Superseded LH hydraulic manifold cover 283693 with cover 323795. Superseded cover mounting connector bracket 311513 with connector bracket assembly 323722. Removed locknuts and added rivnuts 320448, replaced bolt 152655 with screw 320336. Updated illustration from 1038753 to 1039349 to show changes.	ECN 62924
98 Electrical – Harness (FD225), page 229	Added new section for FD225 electrical harness parts with new illustration 1039460.	ECN 61187
99 Electrical – Harness (FD230, FD235, FD240, FD241, FD245, and FD250), page 231	Superseded main harnesses 323140, 323141, 323037, 323139, 323038, and 323045 with main harnesses 323207, 323208, 323210, 323209, 323211, and 323212. Updated illustration from 1038788 to 1039633 to clarify extension harness routing for MY2021/2022 triple-reel FD240.	ECN 61187
102 Electrical – Reel Fore-Aft Sensor, page 237	Added missing sensor support plate 340183. Updated illustration from 1034429 to 1039142 to show changes.	Parts
103 Electrical – Reel Speed Sensor, AGCO and CLAAS, page 239	Revised the description of reel speed sensor disc 228473. Added hex jam nut 7674 to the parts list (was previously NSS).	ECN 63044
104 Electrical – Reel Speed Sensor, John Deere, page 241	Revised the description of reel speed sensor disc 228471.	ECN 63044

Section	Summary of Change	Internal Use Only
105 Electrical – Reel Speed Sensor, Rostselmash, page 243	Added new section for Rostselmash reel speed sensor parts with new illustration 1039514.	ECN 63044
106 Decals and Reflectors – FD2 Series, page 245	Added cam latch decal 340164, updated illustration from 1038583 to 1039686.	ECN 61075
	Added 230 mm red reflector 165524 to the parts list.	ECN 62781
	Superseded reel entanglement decal 313726 with decal 360541.	ECN 63008
	Added 100-hour grease decal 115759 to the parts list (item #8).	ECN 63277
107 Decals – Product Identification, page 247	Added FD225 model number decals 340304 and 340305. Updated illustration from 1035035 to 1039290 to show changes.	ECN 61693
108 Decals – Product Identification, Case, page 249	Added new section for Case product identification decals with new illustration 1039658.	ECN 62781
109 Decals – Product Identification, New Holland, page 251	Added new section for New Holland product identification decals with new illustration 1039659.	ECN 62781
114 (Option) ContourMax™ – Outer Contour Wheels, page 261	Superseded ContourMax Contour Wheels kit B7335 with kit B7389.	ECN 62724
115 (Option) ContourMax™ – Inner Contour Wheels, page 265	Superseded ContourMax Contour Wheels kit B7335 with kit B7389. Superseded indicator bracket 340703 and height indicator 313447 with ContourMax Gauge Service kit 360358. Added footnotes for clarity.	ECN 62724
	Revised footnote on assembly 323478; replaced 250-hour grease decal 323516 with 100-hour grease decal 115759.	ECN 63277
116 (Option) ContourMax™ – Gauge Service Kit, page 269	Added new section for ContourMax Gauge Service kit 360358 with new illustration 1039500.	ECN 62724
117 (Option) ContourMax™ – Height Sensing – John Deere X9 Series, page 271	Discontinued ContourMax Indicator kit B7349 and added ContourMax Gauge Service Kit 360358.	ECN 62724
	Updated illustration from 1038919 to 1039283 to show locations of bolt 184662 (hardware A), nut 135799 (hardware B), and nut 320218 (hardware L).	Publications
122 (Option) Endshield Conversion Kits, page 287	Added new section for endshield conversion kits with new illustration 1039667.	ECN 62956
124 (Option) Four-Point Guard Kits, Single Knife, page 293	Added new section for single-knife four-point guard kits with new illustration 1039619.	ECN 62217
125 (Option) Four-Point Guard Kits, Double Knife, page 295	Added new section for double-knife four-point guard kits with new illustration 1039618.	ECN 62217
128 (Option) Reel Tine Tube Conversion Kits – Double Reel, 5 Bat to 6 Bat, page 301	Added new section for double-reel, 5 bat to 6 bat tine tube conversion kits B7357–B7359 with new illustration 1039714.	ECN 62535
129 (Option) Reel Tine Tube Conversion Kits – Double Reel, 6 Bat to 9 Bat, page 305	Added new section for double-reel, 6 bat to 9 bat tine tube conversion kit B7362 with new illustration 1039715.	ECN 62535
133 (Option) Service Kit – Pointed Guards, Coarse Knives, page 315	Added bundle B7155 to the parts list.	ECN 62799
134 (Option) Service Kit – PlugFree™ Guards, Coarse Knives, page 317	Added bundle B7156 to the parts list.	ECN 62799

Section	Summary of Change	Internal Use Only
135 (Option) Service Kit Plus – Single Knife, page 319	Superseded LH angled plastic fingers 311524 with fingers 360540.	ECN 62799
136 (Option) Service Kit Plus – Double Knife, page 321	Superseded LH angled plastic fingers 311524 with fingers 360540. Superseded coarse center kit 286473 with kit 286861, updated illustration from 1039589 to 1039755 to show added knife section and hardware.	ECN 62799
142 (Option) Sunflower Attachment – Base Kit – Pans and Supports, page 337	Added bolt 136339 and nut 136342 to the parts list. Updated illustration from 1038872 to 1039704 to show how end pans are secured to the header.	ECN 63376
146 (Option) Upper Cross Auger – Two-Piece Auger (FD225, FD230, FD235, and FD241), page 345	Added FD225 UCA kit B6413 and FD225 augers 233654 and 233655 to the parts list.	B6413 ECN 62091
150 Frame Components – Float Module, page 359	Superseded feed auger side cover 347558 with kit 357512. Added kit 357512 service parts to the parts list and updated the illustration from 1036532 to 1039478 to show changes.	ECN 62628
152 Pump Assembly, page 363	Added cross-reference to new pump assembly service parts section.	ECN 60591
153 Integrated Pump – Service Parts, page 365	Added new section for pump assembly 337774 service parts with new illustration 1039434.	ECN 60591
155 Input Drive Assembly, page 373	Replaced non-serviceable part number 328196 with NSS.	Parts
	Added bolt 320180. Updated illustration from 1034466 to 1039341 to show changes.	ECN 63056
158 Input Driveline Conversion Kits, page 383	Added new section for driveline conversion kits B7312 and B7317 with new illustration 1039521.	ECN 61789 ECN 63044
159 Auger Drum and Internal Components, page 385	Added complete feed auger assembly 322372 to the parts list.	Parts
170 Feed Deck – Frame, Pivot Pins, and Front Support, page 415	Superseded feed deck assembly 347456 with assembly 357386. Superseded carrier frame 295378 with frame 347665.	ECN 62559
174 Hydraulics – Center-Link and Header Tilt / Reel Fore-Aft, page 423	Removed edge trim seal 162116 and added cinch strap 295927. Updated illustration from 1038294 to 1039337 to show changes.	ECN 63068
	Added a new section for Case and New Holland FM200 to combine cab electrical parts with new illustration 1039723.	Parts
181 Decals and Reflectors – FM200, page 441	Added wrench return safety decal 360655. Updated illustration from 1038652 to 1039342 to show changes.	ECN 63204
	Superseded float setting decal 337475 with 360716. Updated illustration 1039342 to show changes.	ECN 63304
182 Challenger®, Massey Ferguson®, and Gleaner® – Float Module Completion, page 443	Superseded feed auger top cover 328356 with top cover 357195.	ECN 62628
185 IDEAL™ Series – Float Module Completion, page 451	Superseded feed auger top cover 328356 with top cover 357195.	ECN 62628
188 Case – Float Module Completion, page 459	Superseded feed auger top cover 328356 with top cover 357195.	ECN 62628

Section	Summary of Change	Internal Use Only
190 Case IH 2300/2500 Series – Float Module Completion, page 463	Added new section for Case IH 2300/2500 float module completion with new illustration 1039533.	ECN 61789
191 Case IH 2300/2500 Series – Hydraulic/Electrical Completion, page 465	Added new section for Case IH 2300/2500 hydraulic/electrical completion with new illustration 1039536.	ECN 61789
192 CLAAS – Float Module Completion, page 467	Added washer 184714 to bolt 184675. Updated illustration to show changes.	ECN 62595
	Superseded feed auger top cover 328356 with top cover 357195.	ECN 62628
	Superseded pivot lever 347569 with lever 304669. Updated illustration from 1036830 to 1039300 to show changes.	ECN 63222
193 CLAAS – Hydraulic/Electrical Completion (2022 and Prior), page 469	Added washer 184711 to list of service parts for CLAAS selector valve 328548.	ECN 60926
	Superseded coupler support 314580 with support 347954.	ECN 61979
	Added a cross reference to the CLAAS integration kit. Integration kit is available as an option for model year 2022 and prior machines, but is are now offered as a standard option for model year 2023 and later machines.	ECN 62841
	Superseded CLAAS hydraulic/electrical completion bundle B7058 with electrical completion bundle B7405 and hydraulic completion bundle B7406. Revised the chapter title and footnotes for clarity.	ECN 62959
	Added part descriptions for valve driver module, lock washer, and panel nut to reference item #28 and revised the associated footnote for clarity. Added diode pack 283215 to the parts list and illustration. Updated illustration from 1038828 to 1039482 to show changes.	Engineering
194 CLAAS – Hydraulic Completion (2023 and Later), page 473	Added new section for model year 2023 and later CLAAS hydraulic completion with new illustration 1039495. Superseded CLAAS hydraulic/electrical completion bundle B7058 with electrical completion bundle B7405 and hydraulic completion bundle B7406 for model year 2023.	ECN 62959
195 CLAAS – Electrical Completion (2023 and Later), page 477	Added new section for model year 2023 and later CLAAS electrical completion with new illustration 1039492. Superseded CLAAS hydraulic/electrical completion bundle B7058 with electrical completion bundle B7405 and hydraulic completion bundle B7406 for model year 2023.	ECN 62841 ECN 62959
197 John Deere S Series – Float Module Completion, page 481	Superseded feed auger top cover 328356 with top cover 357195.	ECN 62628
199 John Deere T Series – Float Module Completion, page 487	Superseded feed auger top cover 328356 with top cover 357195.	ECN 62628
200 John Deere X9 Series – Float Module Completion, page 489	Superseded feed auger top cover 328356 with top cover 357195.	ECN 62628
202 John Deere X9 Series – Electrical Completion, page 495	Added header ID plugs 357046, 357047, and 357050–357054 at plug P213A on completion harness 347560. Updated illustration from 1038694 to 1039630 to show changes.	UECN 31491 UECN 31492 ECN 62191 ECN 63367 ECN 63388

Section	Summary of Change	Internal Use Only
203 New Holland CR Wide – Float Module Completion, page 497	Superseded feed auger top cover 328356 with top cover 357195.	ECN 62628
208 New Holland 10 Volt Auto Header Height Control Adapter Kit, page 507	Added new section for New Holland 10 Volt adapter kit B7241 with new illustration 1039669.	ECN 59665 Product Support
209 Rostselmash – Float Module Completion, page 509	Added new section for Rostselmash float module completion with new illustration 1039525.	ECN 63044
210 Rostselmash – Hydraulic/ Electrical Completion, page 511	Added new section for Rostselmash hydraulic/electrical completion with new illustration 1039524.	ECN 63044
213 (Option) FM200 Fillers and Links, page 517	Superseded feed auger side cover 347558 with kit 357512. Added kit 357512 service parts to the parts list and updated the illustration from 1038716 to 1039547.	ECN 62628
215 (Option) Integration Kit – CLAAS, page 521	Added diode pack 283215 as a service part for harness 337119.	Engineering

Introduction i
Abbreviations ii
Serial Number Breaks iii
Summary of Changes – FD2 Series and FM200 (215940 Rev. A) iv

1 Header Frame Components 1
2 Header Frame End Panels 3
3 Manual Case, Retaining Pin, and Knife Storage 5
4 Transition Pan 7
5 Divider Cones 9
6 Divider Rods and Storage 11
7 Endshields – MacDon 13
8 Endshields – Case 15
9 Endshields – New Holland 17
10 Endshield Mount Components 19
11 Draper 21
12 Draper – Backsheet Panels (FD225) 23
13 Draper – Backsheet Panels (FD230, FD235, FD240, and FD241) 25
14 Draper – Backsheet Panels (FD245 and FD250) 27
15 Draper – Tensioner 29
16 Draper – Drive Roller 31
17 Draper – Decks and Tracks (FD225) 33
18 Draper – Decks and Tracks (FD230, FD235, FD240, and FD241) 35
19 Draper – Decks and Tracks (FD245 and FD250) 37
20 Draper – Seals (FD225) 39
21 Draper – Seals (FD230, FD235, and FD240) 41
22 Draper – Seals (FD241, FD245, and FD250) 43
23 Draper Deflectors – Narrow 45
24 Balance Linkage 47
25 Flex Linkage Shield – Backtube Hinge 53
26 Flex Linkage Shield – Single Reel (FD225) and Double Reel (FD230, FD235, FD240, and FD241) 55
27 Flex Linkage Shield – Triple Reel (FD240) 57
28 Flex Linkage Shield – Triple Reel (FD245 and FD250) 59
29 Guards, Hold-Downs, and Cutterbar Shoes – Single Knife, Pointed (FD225, FD230, FD235, and FD240) 61
30 Guards, Hold-Downs, and Cutterbar Shoes – Double Knife, Pointed (FD235, FD240, FD241, FD245, and FD250) 63
31 Guards, Hold-Downs, and Cutterbar Shoes – Single Knife, PlugFree™ (FD225, FD230, FD235, and FD240) 65
32 Guards, Hold-Downs, and Cutterbar Shoes – Double Knife, PlugFree™ (FD240, FD241, FD245, and FD250) 67
33 Knives – Single-Knife Headers, Coarse-Tooth Sections (FD225) 69
34 Knives – Single-Knife Headers, Coarse-Tooth Sections (FD230, FD235, and FD240) 71
35 Knives – Double-Knife Headers, Coarse-Tooth Sections (FD235 and FD240) 73
36 Knives – Double-Knife Headers, Coarse-Tooth Sections (FD241) 77
37 Knives – Double-Knife Headers, Coarse-Tooth Sections (FD245) 81
38 Knives – Double-Knife Headers, Coarse-Tooth Sections (FD250) 85
39 Knife Drive – Single and Double Knife 89

40 Knife Drive Box 91
41 Reel Support Arm and Lift Cylinders – Center Arm (FD230, FD235, FD240, and FD241) 93
42 Reel Support Arm and Lift Cylinders – Center Arm, Right Side (FD240, FD245, and FD250) 95
43 Reel Support Arm and Lift Cylinders – Center Arm, Left Side (FD240, FD245, and FD250) 97
44 Reel Support Arm and Lift Cylinders – Outer Arms, Single Reel 99
45 Reel Support Arm and Lift Cylinders – Outer Arms, Double and Triple Reel 101
46 Reel Arm Components – Right Arm, Single Reel (FD225) 103
47 Reel Arm Components – Right Arm, Double Reel (FD230, FD235, FD240, and FD241) 105
48 Reel Arm Components – Right Arm, Triple Reel (FD240, FD245, and FD250) 107
49 Reel Arm Components – Center Arm (FD230, FD235, FD240, FD241, FD245, and FD250) 109
50 Reel Arm Components – Center Right Arm, Triple Reel (FD240, FD245, and FD250) 111
51 Reel Arm Components – Left Arm (FD225, FD230, FD235, FD240, FD241, FD245, and FD250) 113
52 Reel – Drive, Right Arm, Single Reel 115
53 Reel – Drive, Center Arm, Double Reel and Triple Reel 119
54 Reel – Cam Components, Right Arm 123
55 Reel – Cam Components, Center Right Arm, Triple Reel (FD240, FD245, and FD250) 125
56 Reel – Tine Tube 127
57 Reel Discs – Cam End and Linkage (FD225, FD230, FD235, FD240, FD241, FD245, and FD250) 131
58 Reel Discs – Mid Span, Cam Side (FD225, FD235, FD240, FD241, FD245, and FD250) 133
59 Reel Discs – Mid Span, Tail Side (FD225, FD230, FD235, FD240, FD241, FD245, and FD250) 135
60 Reel Discs – Tail End (FD225, FD230, FD235, FD240, FD241, FD245, and FD250) 137
61 Reel – Center Tubes, Single Reel 139
62 Reel – Center Tubes, Double Reel 141
63 Reel – Center Tubes, Triple Reel 143
64 Reel – Endshields, Cam End, Inboard 145
65 Reel – Endshields, Cam End, Outboard 147
66 Reel – Endshields, Tail End, Inboard 149
67 Reel – Endshields, Tail End, Outboard 151
68 Skid Shoes – End and Center 153
69 Hydraulics – Manifold Fittings and Fasteners 155
70 Hydraulics – Manifold Plugs 157
71 Hydraulics – Knife Drive, Single and Double Knife, Left Side (FD225, FD230, FD235, FD240, FD241, and FD245) 159
72 Hydraulics – Knife Drive, Double Knife, Left Side (FD250) 163
73 Hydraulics – Knife Drive, Double Knife, Right Side (FD235, FD240, and FD241) 165
74 Hydraulics – Knife Drive, Double Knife, Right Side (FD245 and FD250) 169
75 Hydraulics – Draper Drive (FD225, FD230, FD235, FD240, and FD241) 173
76 Hydraulics – Draper Drive (FD245 and FD250) 175
77 Hydraulics – Lift and Fore-Aft, Single Reel, Left Arm (FD225) 177
78 Hydraulics – Lift and Fore-Aft, Single Reel, Right Arm (FD225) 179
79 Hydraulics – Lift and Fore-Aft, Double Reel, Left Arm (FD230, FD235, FD240, and FD241) 181
80 Hydraulics – Lift and Fore-Aft, Double Reel, Center Arm (FD230, FD235, FD240, and FD241) 183
81 Hydraulics – Lift and Fore-Aft, Double Reel, Right Arm (FD230 and FD235) 185

82 Hydraulics – Lift and Fore-Aft, Double Reel, Right Arm (FD240 and FD241) 187
83 Hydraulics – Lift and Fore-Aft, Triple Reel, Left Arm (FD240, FD245, and FD250) 191
84 Hydraulics – Lift and Fore-Aft, Triple Reel, Center Arm, Left Side (FD240, FD245, and FD250) 193
85 Hydraulics – Lift and Fore-Aft, Triple Reel, Center Arm, Right Side (FD240, FD245, and FD250) 195
86 Hydraulics – Lift and Fore-Aft, Triple Reel, Right Arm (FD240, FD245, and FD250) 197
87 Hydraulics – Upper Cross Auger 201
88 Hydraulics – Reel Drive, Single Reel 203
89 Hydraulics – Reel Drive, Double and Triple Reel 205
90 Hydraulics – ContourMax™, Contour Wheels (FD225 and FD230) 207
91 Hydraulics – ContourMax™, Contour Wheels (FD235) 211
92 Hydraulics – ContourMax™, Contour Wheels (FD240, FD241, FD245, and FD250) 213
93 Hydraulics – VertiBlade™ Vertical Knife (FD225, FD230, FD235, FD241, and FD245) 217
94 Hydraulics – VertiBlade™ Vertical Knife (FD250) 221
95 Hydraulic Line Covers (FD225) 223
96 Hydraulic Line Covers (FD230, FD235, and FD240) 225
97 Hydraulic Line Covers (FD241, FD245, and FD250) 227
98 Electrical – Harness (FD225) 229
99 Electrical – Harness (FD230, FD235, FD240, FD241, FD245, and FD250) 231
100 Electrical – Clearance Lights 233
101 Electrical – Reel Height Sensor 235
102 Electrical – Reel Fore-Aft Sensor 237
103 Electrical – Reel Speed Sensor, AGCO and CLAAS 239
104 Electrical – Reel Speed Sensor, John Deere 241
105 Electrical – Reel Speed Sensor, Rostselmash 243
106 Decals and Reflectors – FD2 Series 245
107 Decals – Product Identification 247
108 Decals – Product Identification, Case 249
109 Decals – Product Identification, New Holland 251
110 Decals – French 253
111 Decals – Portuguese 255
112 Decals – Russian 257
113 Decals – Spanish 259
114 (Option) ContourMax™ – Outer Contour Wheels 261
115 (Option) ContourMax™ – Inner Contour Wheels 265
116 (Option) ContourMax™ – Gauge Service Kit 269
117 (Option) ContourMax™ – Height Sensing – John Deere X9 Series 271
118 (Option) Crop Lifters and Storage Rack 273
119 (Option) Divider Storage Bracket 275
120 (Option) EasyMove™ – Slow Speed Transport, Base Kit and Stabilizer Wheels 277
121 (Option) EasyMove™ – Slow Speed Transport, Wheels, Tires, and Tow Poles 283
122 (Option) Endshield Conversion Kits 287
123 (Option) Floating Crop Dividers 289
124 (Option) Four-Point Guard Kits, Single Knife 293

125 (Option) Four-Point Guard Kits, Double Knife 295
126 (Option) Header Tilt Foot Switch 297
127 (Option) High Wear Skid Shoes 299
128 (Option) Reel Tine Tube Conversion Kits – Double Reel, 5 Bat to 6 Bat 301
129 (Option) Reel Tine Tube Conversion Kits – Double Reel, 6 Bat to 9 Bat 305
130 (Option) Reel – Two Speed 309
131 (Option) Rice Divider Rods 311
132 (Option) Rock Retarder Kit 313
133 (Option) Service Kit – Pointed Guards, Coarse Knives 315
134 (Option) Service Kit – PlugFree™ Guards, Coarse Knives 317
135 (Option) Service Kit Plus – Single Knife 319
136 (Option) Service Kit Plus – Double Knife 321
137 (Option) Side Hill Stabilizer Kit 323
138 (Option) Stabilizer Wheels 325
139 (Option) Steel Finger Kit 329
140 (Option) Stubble Lights 331
141 (Option) Sunflower Attachment – Base Kit – Lean Bar and Deflectors 333
142 (Option) Sunflower Attachment – Base Kit – Pans and Supports 337
143 (Option) Sunflower Attachment – Deflector Kits (Double Reel) 339
144 (Option) Sunflower Attachment – Deflector Kits (Triple Reel) 341
145 (Option) Sunflower Attachment – Pans 343
146 (Option) Upper Cross Auger – Two-Piece Auger (FD225, FD230, FD235, and FD241) 345
147 (Option) Upper Cross Auger – Three-Piece Auger (FD240, FD245, and FD250) 349
148 (Option) VertiBlade™ Vertical Knife Kit 353
149 (Option) VertiBlade™ Vertical Knife Components 355
150 Frame Components – Float Module 359
151 Pump, Gearbox, and Input Drive 361
152 Pump Assembly 363
153 Integrated Pump – Service Parts 365
154 Gearbox Assembly 369
155 Input Drive Assembly 373
156 Input Driveline and Support 377
157 Input Driveline and Support – High Angle 379
158 Input Driveline Conversion Kits 383
159 Auger Drum and Internal Components 385
160 Auger Assembly – Right Arm 387
161 Auger Assembly – Left Arm 391
162 Auger – Float Linkage 395
163 Auger Completion 397
164 Auger Conversion Kits – Fingers and Flighting 399
165 Auger – Grease Lines 401
166 Float Linkage and Float Setting and Measuring 403
167 Float Springs 407

168 Float Module Attaching and Filler Components – FM200 to FD2 Series (2021 and Prior) 409
169 Float Module Attaching and Filler Components – FM200 to FD2 Series (2022 and Later) 413
170 Feed Deck – Frame, Pivot Pins, and Front Support 415
171 Feed Deck – Draper 417
172 Feed Deck – Drive/Idler Roller and Tensioner 419
173 Feed Deck – Pans and Fillers 421
174 Hydraulics – Center-Link and Header Tilt / Reel Fore-Aft 423
175 Hydraulics – Feed Deck 427
176 Hydraulics – Suction and Return 429
177 Hydraulics – Double Reel, Float Module to Header Manifold 431
178 Hydraulics – Triple Reel, Float Module to Header Manifold 433
179 Electrical – Base 435
180 Electrical – FM200 to Combine Cab 437
181 Decals and Reflectors – FM200 441
182 Challenger®, Massey Ferguson®, and Gleaner® – Float Module Completion 443
183 Gleaner® – Ultra Narrow Deflector Completion 445
184 Challenger®, Massey Ferguson®, and Gleaner® – Hydraulic/Electrical Completion 447
185 IDEAL™ Series – Float Module Completion 451
186 IDEAL™ Series – Hydraulic/Electrical Completion 453
187 Challenger®, Massey Ferguson®, and IDEAL™ Series – Auger Completion 457
188 Case – Float Module Completion 459
189 Case – Hydraulic/Electrical Completion 461
190 Case IH 2300/2500 Series – Float Module Completion 463
191 Case IH 2300/2500 Series – Hydraulic/Electrical Completion 465
192 CLAAS – Float Module Completion 467
193 CLAAS – Hydraulic/Electrical Completion (2022 and Prior) 469
194 CLAAS – Hydraulic Completion (2023 and Later) 473
195 CLAAS – Electrical Completion (2023 and Later) 477
196 CLAAS – Auger Completion 479
197 John Deere S Series – Float Module Completion 481
198 John Deere S and T Series – Hydraulic/Electrical Completion 483
199 John Deere T Series – Float Module Completion 487
200 John Deere X9 Series – Float Module Completion 489
201 John Deere X9 Series – Hydraulic Completion 491
202 John Deere X9 Series – Electrical Completion 495
203 New Holland CR Wide – Float Module Completion 497
204 New Holland CR Wide – Hydraulic/Electrical Completion 499
205 New Holland CR Wide – Auger Completion 501
206 New Holland CR Wide – Flighting Completion 503
207 New Holland CR Wide – Deflector Completion 505
208 New Holland 10 Volt Auto Header Height Control Adapter Kit 507
209 Rostselmash – Float Module Completion 509
210 Rostselmash – Hydraulic/Electrical Completion 511

211 (Option) Auger Flighting Kits 513
212 (Option) FM200 Full Interface Filler – FD2 Series 515
213 (Option) FM200 Fillers and Links 517
214 (Option) Hillside Extension 519
215 (Option) Integration Kit – CLAAS 521
216 (Option) Integration Kit – John Deere 523
217 (Option) Stripper Bars 525
Index 528

1 Header Frame Components

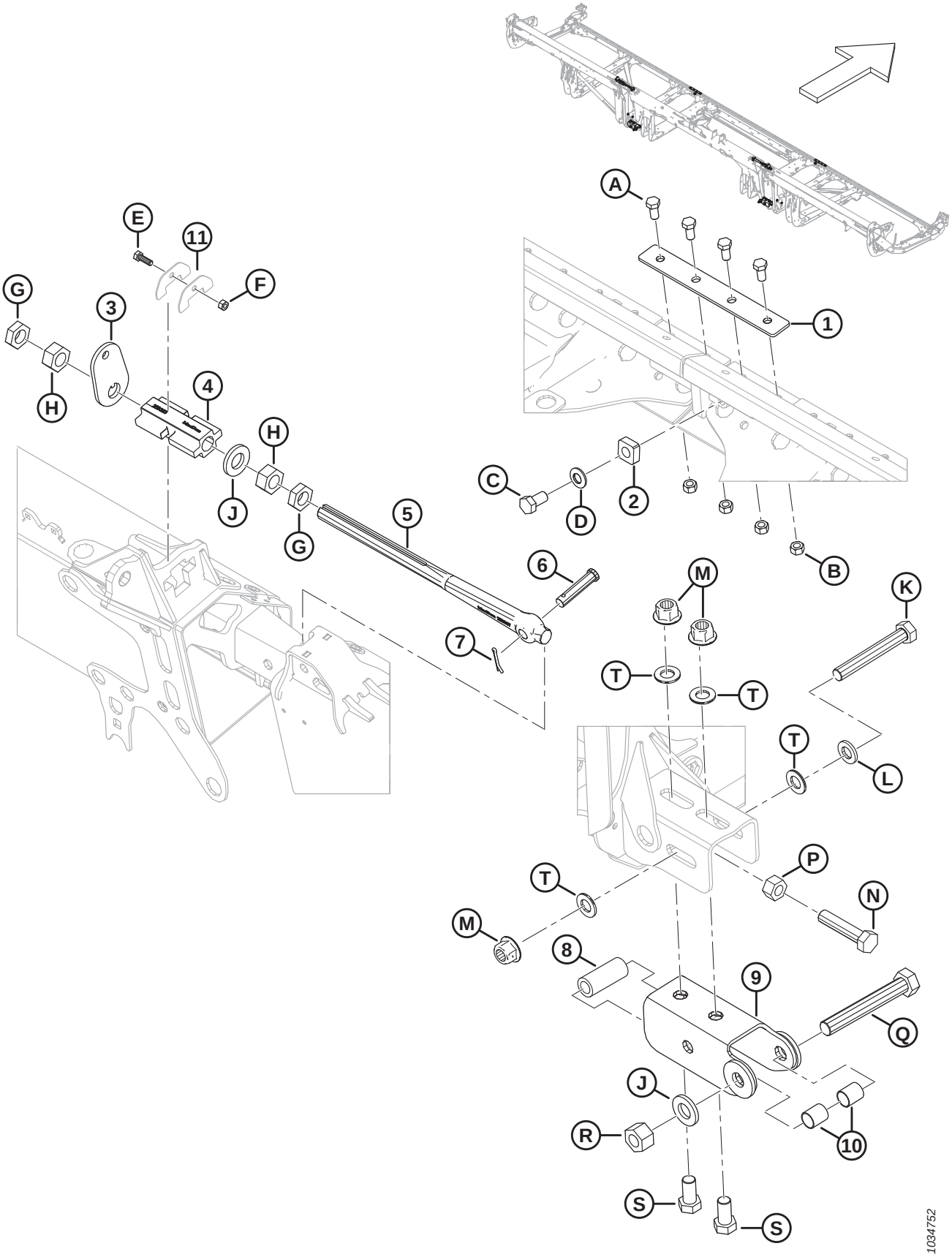

HEADER FRAME COMPONENTS

Ref	Part Number	Description	Qty	Serial Number
1	288438	BAR	2	
2	266277	STOP – HINGE	2	
3	258835	WASHER – WING LOCK	2	
4	258383	LOCK – MACHINED WING LOCK	2	
5	258637	LINK – LOCK LINK ADJ	2	
6	18704	PIN – CLEVIS, 15 MM X 68 MM OAL	2	
7	18607	PIN – COTTER 5/32 DIA X 1.5 ZP	2	
8	52129	SPACER	2	
9	312704	CHANNEL WELDT	2	
10	258843	BUSHING	4	
11	NSS	PLATE – LOCK LINK RETAINER	4	
A	50155	BOLT – HEX HD TFL M12 X 1.75 X 25-8.8-AA1J		
B	184694	NUT – HEX M12 X 1.75-8-AA1J		
C	136143	BOLT – HEX HD TFL M16 X 2 X 30-10.9-AA1J		
D	184718	WASHER – CON SPRING M16 STL SAE 1050-1075		
E	184652	BOLT – HEX HD TFL M8 X 1.25 X 25-8.8-AA1J		
F	30856	NUT – HEX M8 X 1.25-9-AA1J		
G	136513	NUT – HEX THIN FINE M24 X 1.5-8-AA1J		
H	136512	NUT – HEX FINE M24 X 1.5-8-AA1J		
J	31774	WASHER – FLAT 1-1/8-30HRC-AC0C		
K	136887	BOLT – HEX HD M20 X 2.5 X 140-10.9		
L	21540	WASHER – HARD ASTM F436M20-340HV-AB2C		
M	136122	NUT – HEX FLG CTR LOC M20 X 2.5-10-AA1J		
N	320169	BOLT – HEX HD TFL M20 X 2.5 X 90-8.8-ZINC		
P	136124	NUT – HEX M20 X 2.5-10-AA1J		
Q	320171	BOLT – HEX HD M24 X 3 X 160-10.9-ZINC		
R	136848	NUT – HEX TOP LOC M24 X 3-10-AA1J		
S	252303	BOLT – HEX HD TFL M20 X 2.5 X 40-10.9-A3L		
T	136701	WASHER – NORDLOCK M20		

2 Header Frame End Panels

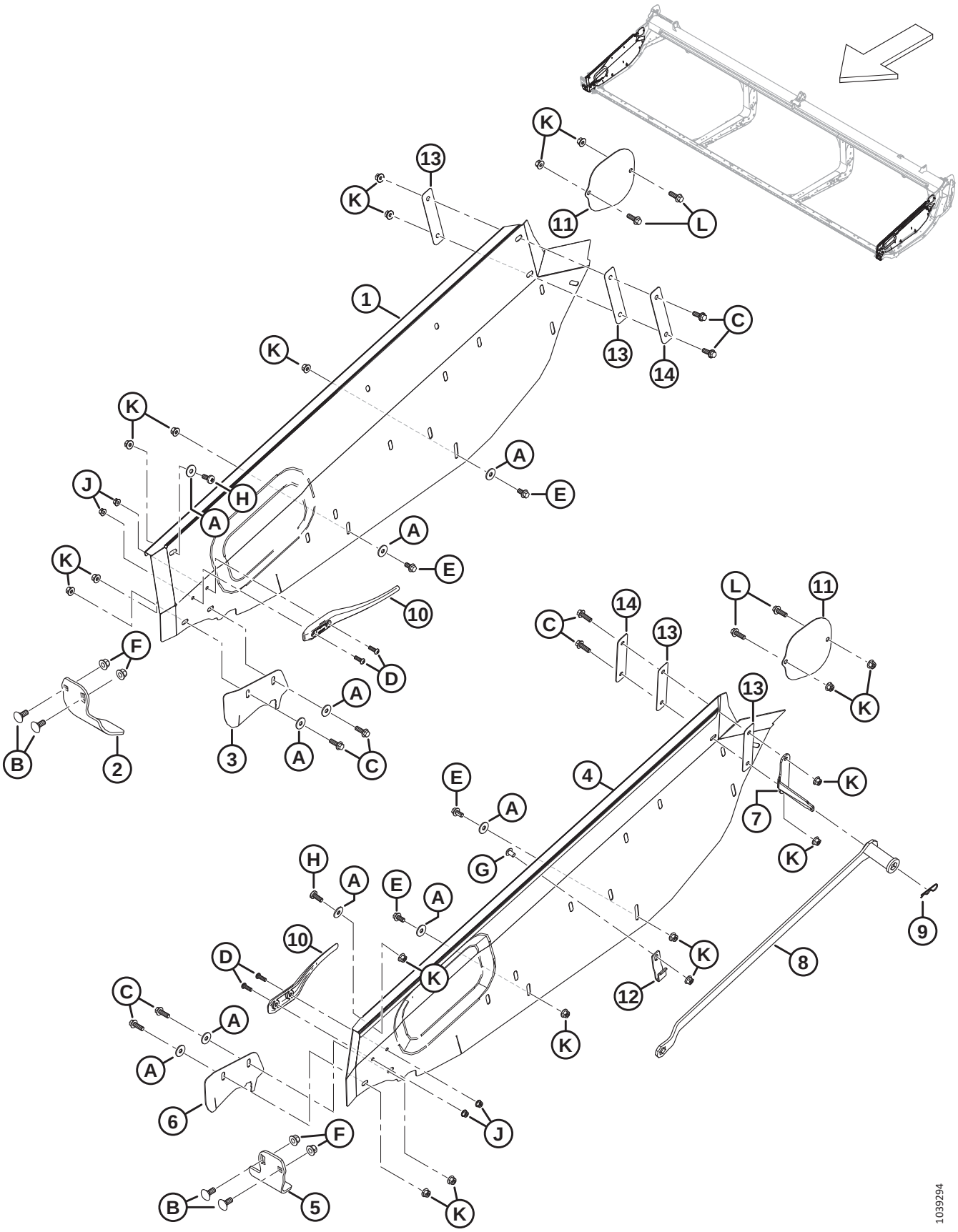

HEADER FRAME END PANELS

Ref	Part Number	Description	Qty	Serial Number
1	**340318**	**END PANEL – RH**	**1**	
2	289358	GUARD – RH KNIFE HEAD	1	
3	289349	COVER – RH KNIFE OPENING [1]	1	
4	**340306**	**END PANEL – LH**	**1**	
5	289220	GUARD – LH KNIFE HEAD	1	
6	289341	COVER – LH KNIFE OPENING [1]	1	
7	340122	BRACKET – WRENCH HOLDER	1	
8	**360361**	**TOOL – HEADER ADJUSTER WELDT** [2]	**1**	
9	13125	PIN – HAIR	1	
10	289742	DEFLECTOR – FINGER	2	
11	289261	SHIELD – UCA COVER	2	
12	340113	RETAINER – WRENCH FRONT	1	
13	**340193**	**INSULATOR – HEADER PANELS** [3]	**4**	
14	**340215**	**PLATE** [4]	**2**	
A	184712	WASHER – FLAT LARGE M10-200HV		
B	184667	BOLT – RHSN M12 X 1.75 X 30-8.8-ZINC		
C	184665	BOLT – HEX FLG HD M10 X 1.5 X 30-10.9-AA1J		
D	184649	SCREW – HEX SOC BTN HD M8 X 1.25 X 25		
E	152655	BOLT – HEX FLG HD M10 X 1.5 X 20-8.8-AA1J		
F	136431	NUT – HEX FLG CTR LOC M12 X 1.75-10		
G	**136640**	**SCREW – TORX TRUSS HD M10 X 1.5 X 16 X SPCL-8.8-AA1J**		
H	320304	SCREW – TORX TRUSS HD M10 X 1.5 X 25-SPCL-8.8-ZINC		
J	135337	NUT – HEX FLG CTR LK M8 X 1.25-8-AA1J		
K	135799	NUT – HEX FLG CTR LOC M10 X 1.5-10		
L	184661	BOLT – HEX HD TFL M10 X 1.5 X 30-8.8-AA1J		

1. Not recommended in all conditions. Used primarily in rice and fine grasses to keep crop from getting caught in the delivery opening.
2. Kit includes header adjuster tool (NSS) and instructions.
3. Two plastic washers (MD #150819) were previously used on the inboard side of the end panel.
4. Two large flat washers (MD #184712) were previously used on the inboard side of the end panels, between plastic washers (MD #150819) and M10 hex bolt (MD #184665).

3 Manual Case, Retaining Pin, and Knife Storage

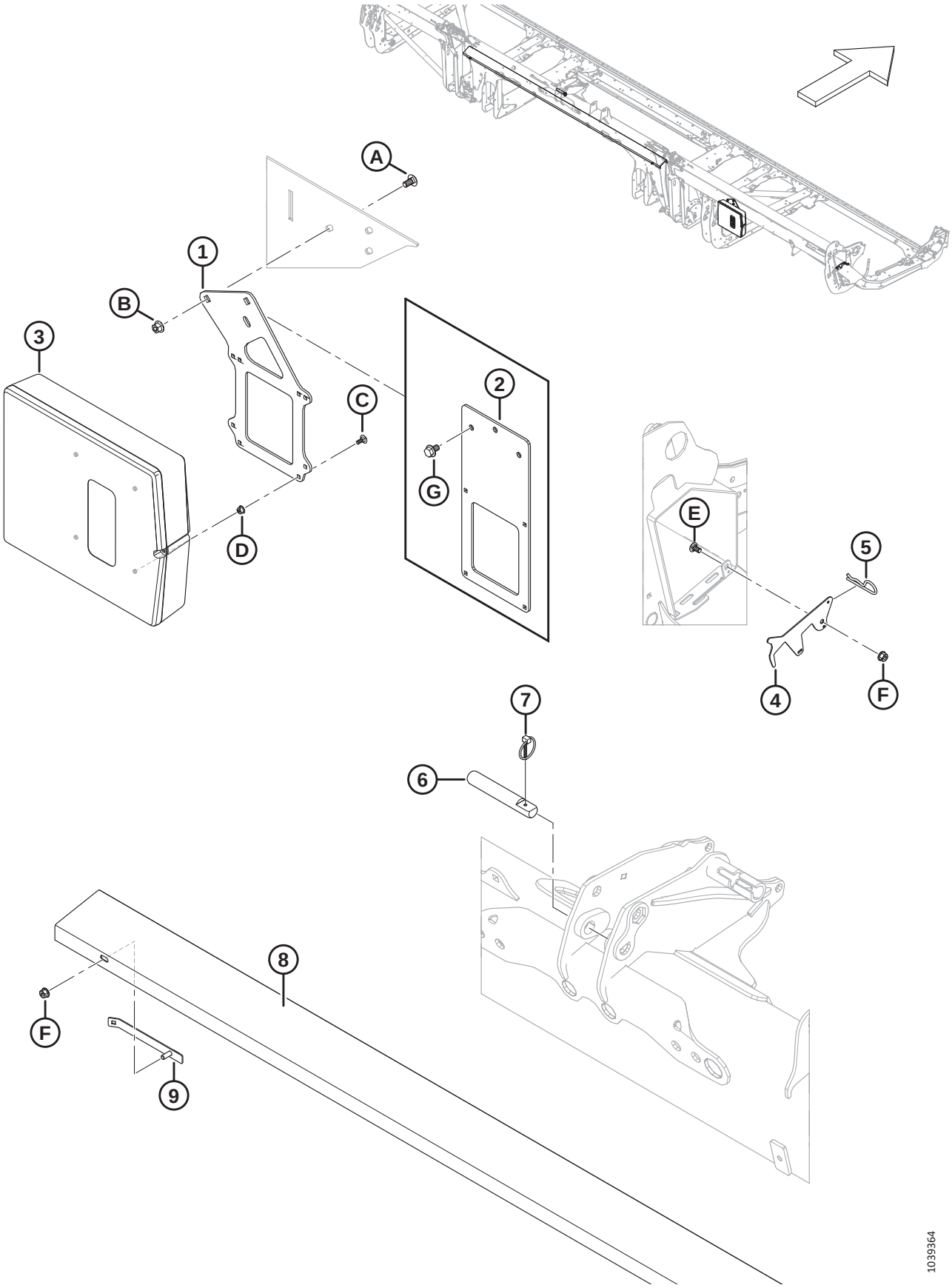

Ref	Part Number	Description	Qty	Serial Number
1	**360175**	**SUPPORT – MANUAL CASE** [5]	**1**	
2	**360176**	**SUPPORT – MANUAL CASE (FD225)** [6]	**1**	
3	220107	CASE – MANUAL	1	
4	286741	LATCH – RETAINER, KNIFE STORAGE	1	
5	13125	PIN – HAIR	1	
6	313734	PIN – CENTER LINK [7]	1	
7	102264	PIN – LYNCH 3/16 X 1 9/16 IN	1	
8	286502	SUPPORT – SPARE KNIFE, SHORT (**FD225**, FD230, FD235, FD240, FD241)	1	
	286503	SUPPORT – SPARE KNIFE, LONG (FD245 AND FD250)	1	
9	286725	RETAINER WELDMENT, SPARE KNIFE SUPPORT	2	
A	184657	BOLT – RHSSN M10 X 1.5 X 20-8.8-AA1J		
B	135799	NUT – HEX FLG CTR LOC M10 X 1.5-10		
C	136748	BOLT – RHSN M6 X 1 X 16-8.8-ZINC		
D	152668	NUT – HEX FLG CTR LOC M6 X 1-8		
E	191489	BOLT – RHSSN TFL M8 X 1.25 X 16-8.8-AA1J		
F	135337	NUT – HEX FLG CTR LK M8 X 1.25-8-AA1J		
G	**136151**	**BOLT – HEX FLG HD TFL M10 X 1.5 X 16-8.8-AA1J** [6]		

5. All headers except FD225.
6. FD225 headers only.
7. The center-link pin is used to hold the cylinder from the FM200 center-link; refer to Section *174 Hydraulics – Center-Link and Header Tilt / Reel Fore-Aft, page 423*.

4 Transition Pan

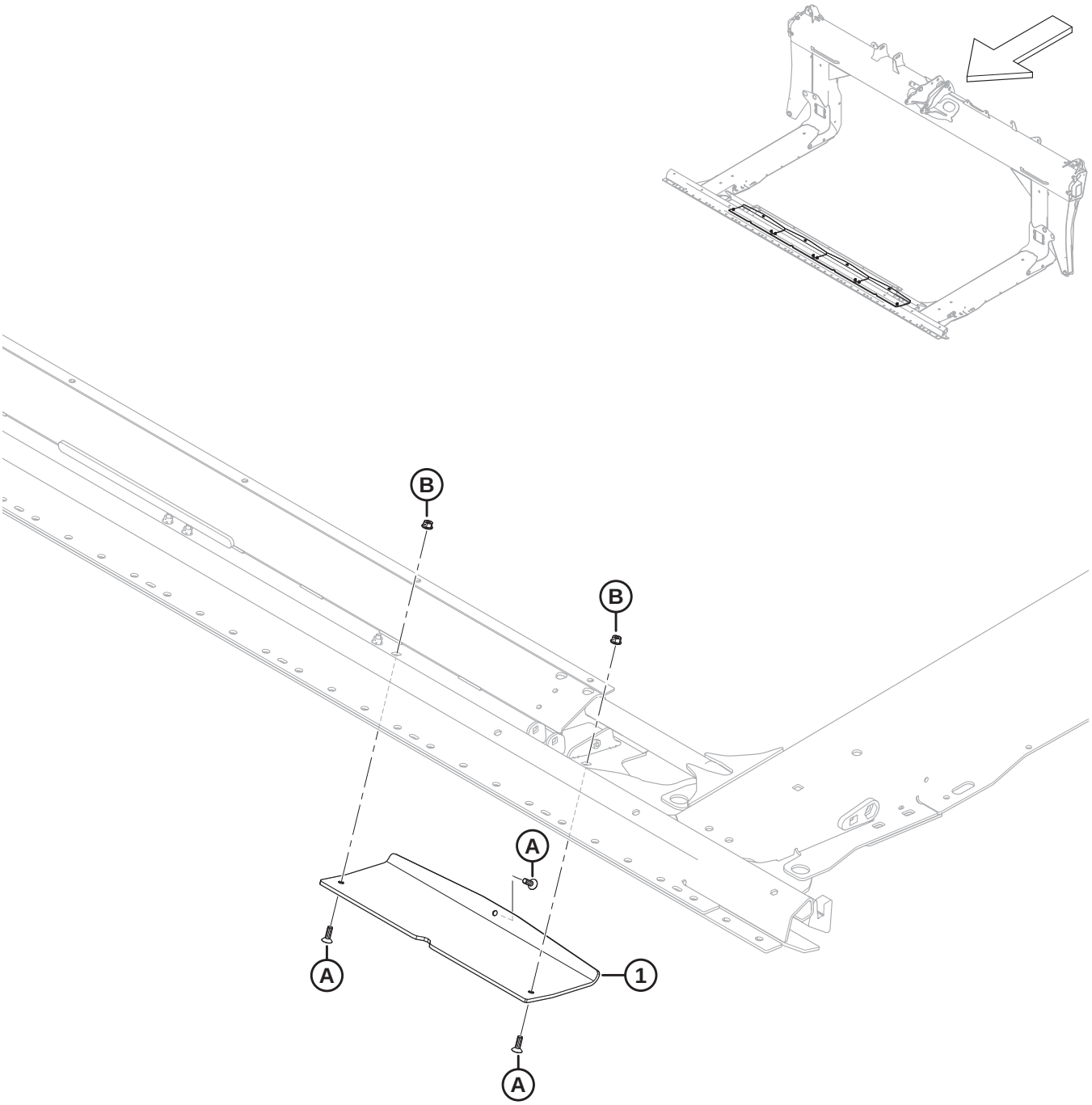

1032288

TRANSITION PAN

Ref	Part Number	Description	Qty	Serial Number
1	276202	SHOE – TRANSITION PAN SKID	4	
A	136492	SCREW – HEX SOC CSK HD TFL M8 X 1.25 X 25-10.9-AA1J		
B	135337	NUT – HEX FLG CTR LK M8 X 1.25-8-AA1J		

5 Divider Cones

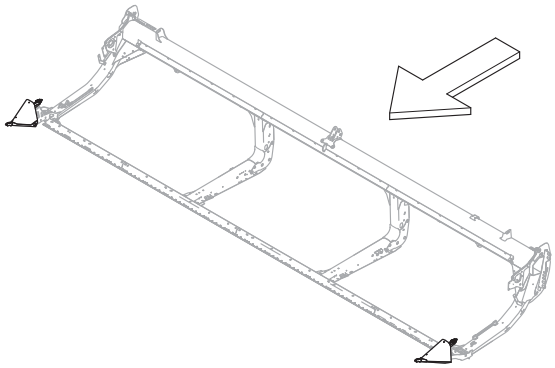

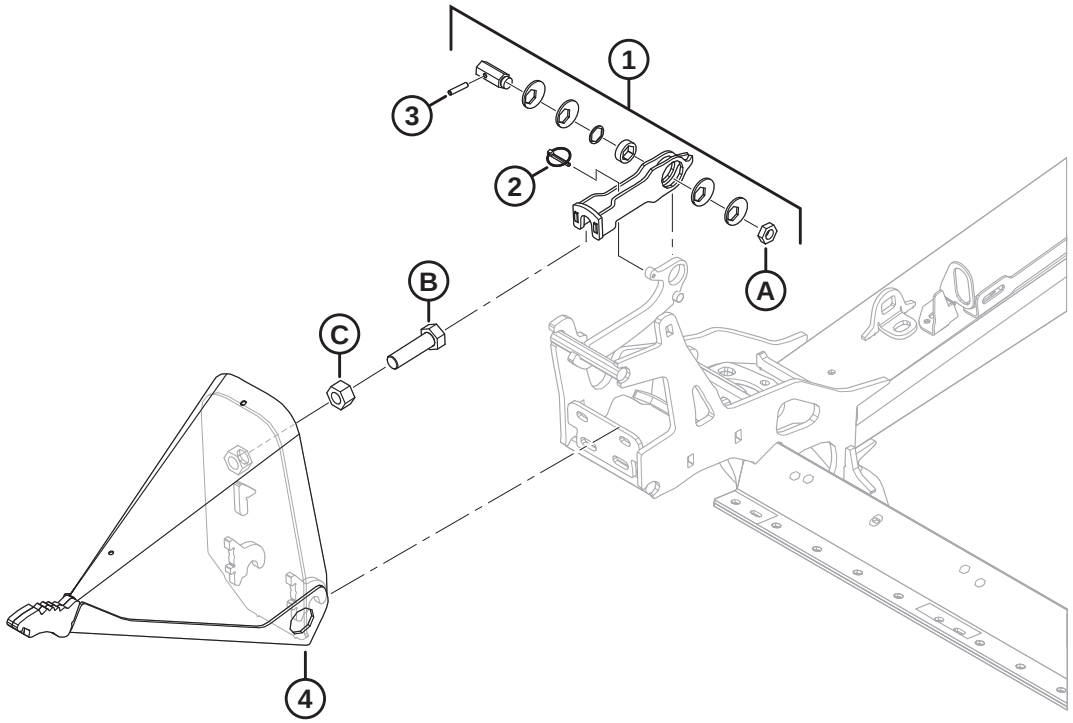

1032287

DIVIDER CONES

Ref	Part Number	Description	Qty	Serial Number
1	313767	KIT – DIVIDER LATCH [8]	2	
2	50193	PIN – LYNCH	2	
3	16266	PIN – SPRING 1/4 DIA X 1.25 LG	2	
4	289235	DIVIDER ASSEMBLY – LH [9]	1	
	289359	DIVIDER ASSEMBLY – RH [9]	1	
A	320218	NUT – HEX THIN M16 X 2-SPCL-5-ZINC		
B	136339	BOLT – HEX HD FINE TFL M20 X 1.5 X 70 X 8.8-ZINC		
C	136342	NUT – HEX FINE M20 X 1.5 X 10-AA3L		

8. The Divider Latch Kit includes latch (NSS), lynch pin (MD #50193), spring pin (MD #16266), eccentric disc (NSS), bushing (NSS), hexagonal shaft (NSS), shim (NSS), latch (NSS), decals (MD #289762, MD #289763), and nut (MD #320218).
9. Includes bolt (MD #136339) and nut (MD #136342).

6 Divider Rods and Storage

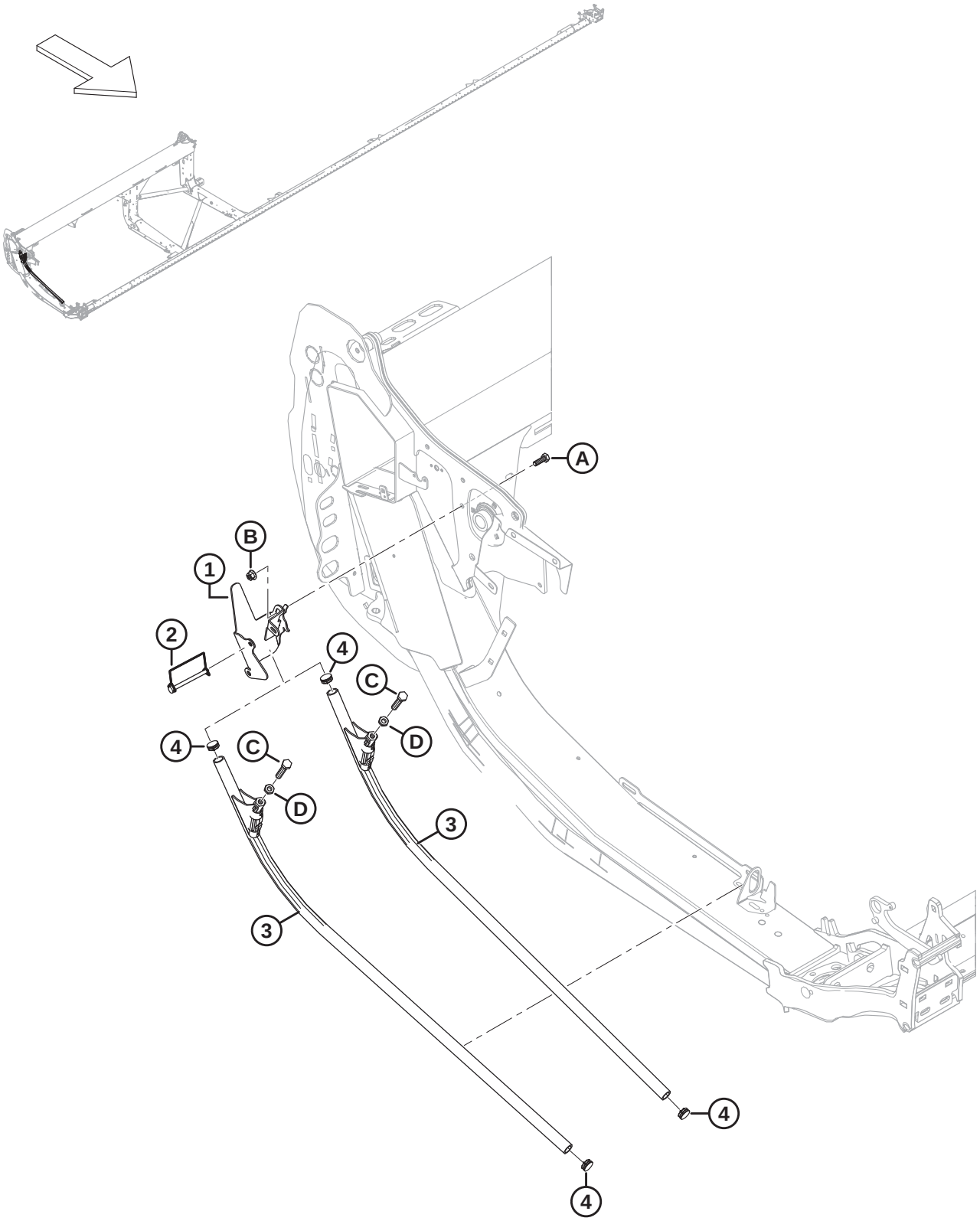

DIVIDER RODS AND STORAGE

Ref	Part Number	Description	Qty	Serial Number
1	**360127**	**SUPPORT WELDT – ROD STORAGE**	**1**	
2	136749	PIN – LYNCH	1	
3	289654	DIVIDER – ROD ASSY [10]	2	
4	335301	PLUG – PLASTIC, SNAP-IN	2	
A	184661	BOLT – HEX HD TFL M10 X 1.5 X 30-8.8-AA1J		
B	135799	NUT – HEX FLG CTR LOC M10 X 1.5-10		
C	252541	BOLT – HEX HD TFL M12 X 1.75 X 65-8.8-AA3L		
D	184696	NUT – HEX THIN M12 X 1.75-05-AA1J		

10. Includes bolt (MD #252541), nut (MD #184696), and two plugs (MD #335301).

7 Endshields – MacDon

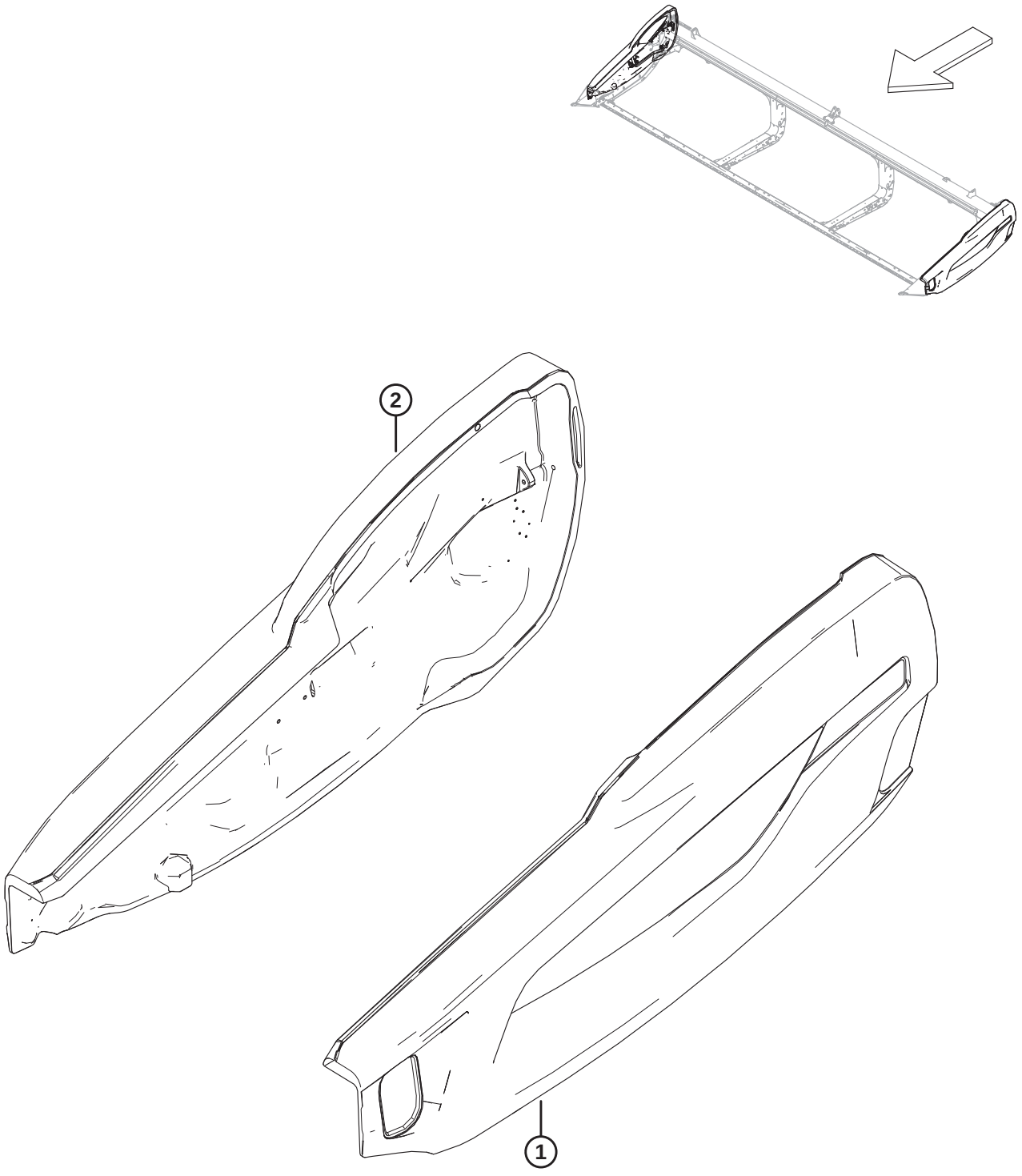

1034956

Ref	Part Number	Description	Qty	Serial Number
1	**360554**	**SHIELD ASSY – BLACK, LH** [11]	**1**	
2	**360555**	**SHIELD ASSY – BLACK, RH** [11]	**1**	
	165524	**REFLECTOR – RED, 230 MM** [12]		

11. Refer to Section *107 Decals – Product Identification, page 247* for product identification decals.
12. Refer to Section *106 Decals and Reflectors – FD2 Series, page 245*. This reflector is used on the right endshield only.

8 Endshields – Case

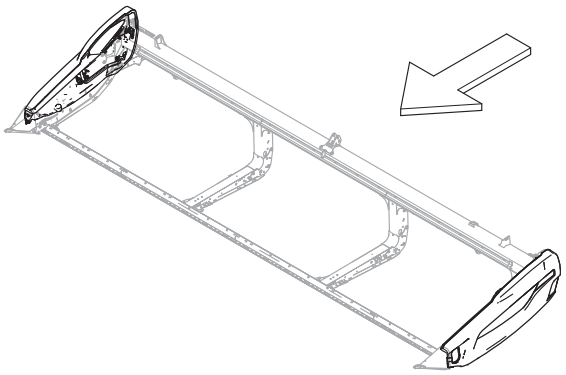

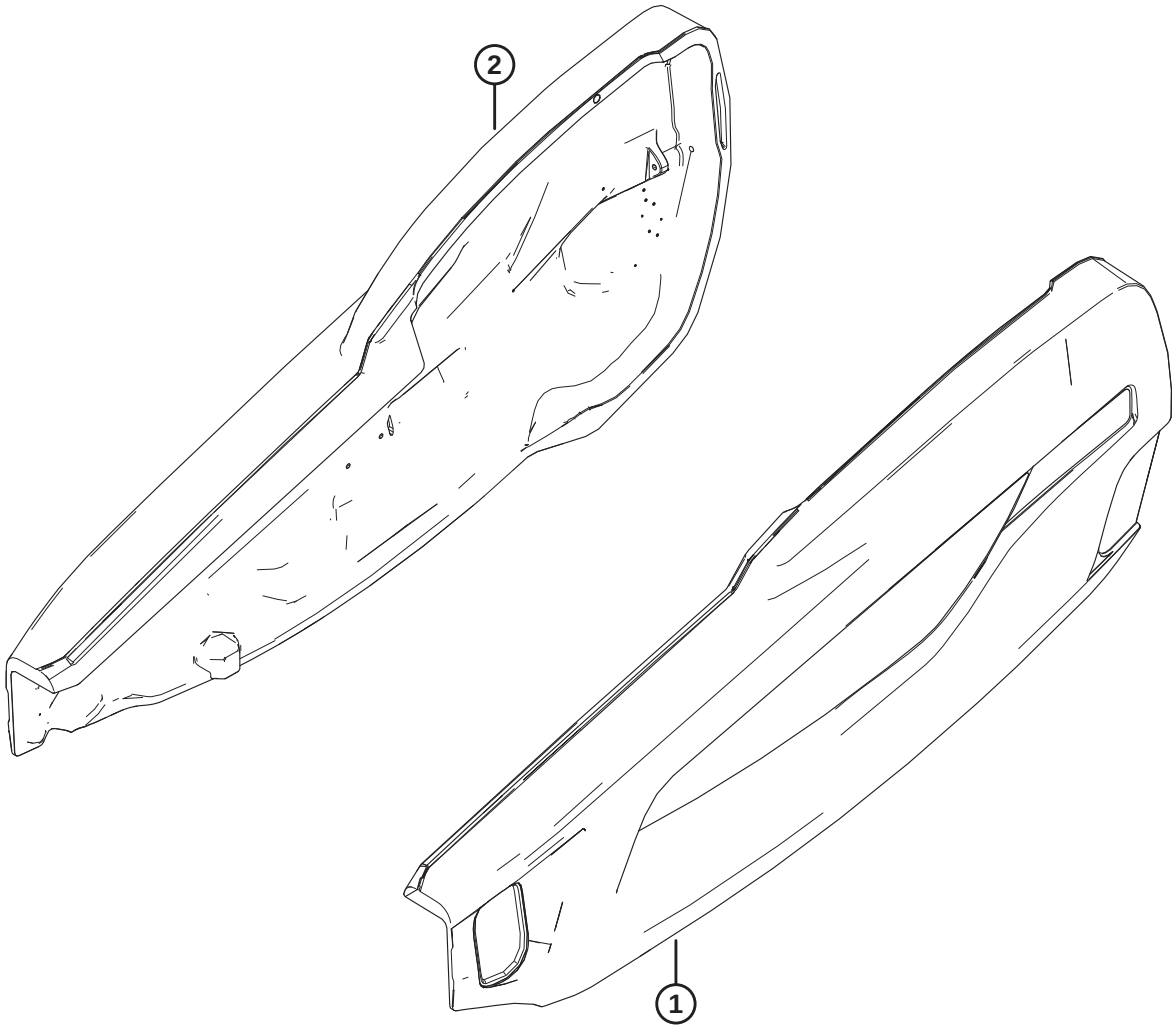

1039649

Ref	Part Number	Description	Qty	Serial Number
1	**360552**	**SHIELD ASSY – CIH AG RED, LH** [13]	**1**	
2	**360448**	**SHIELD ASSY – CIH AG RED, RH** [13]	**1**	
	165524	**REFLECTOR – RED, 230 MM** [14]		

13. Refer to Section *108 Decals – Product Identification, Case, page 249* for product identification decals.
14. Refer to Section *106 Decals and Reflectors – FD2 Series, page 245*. This reflector is used on the right endshield only.

9 Endshields – New Holland

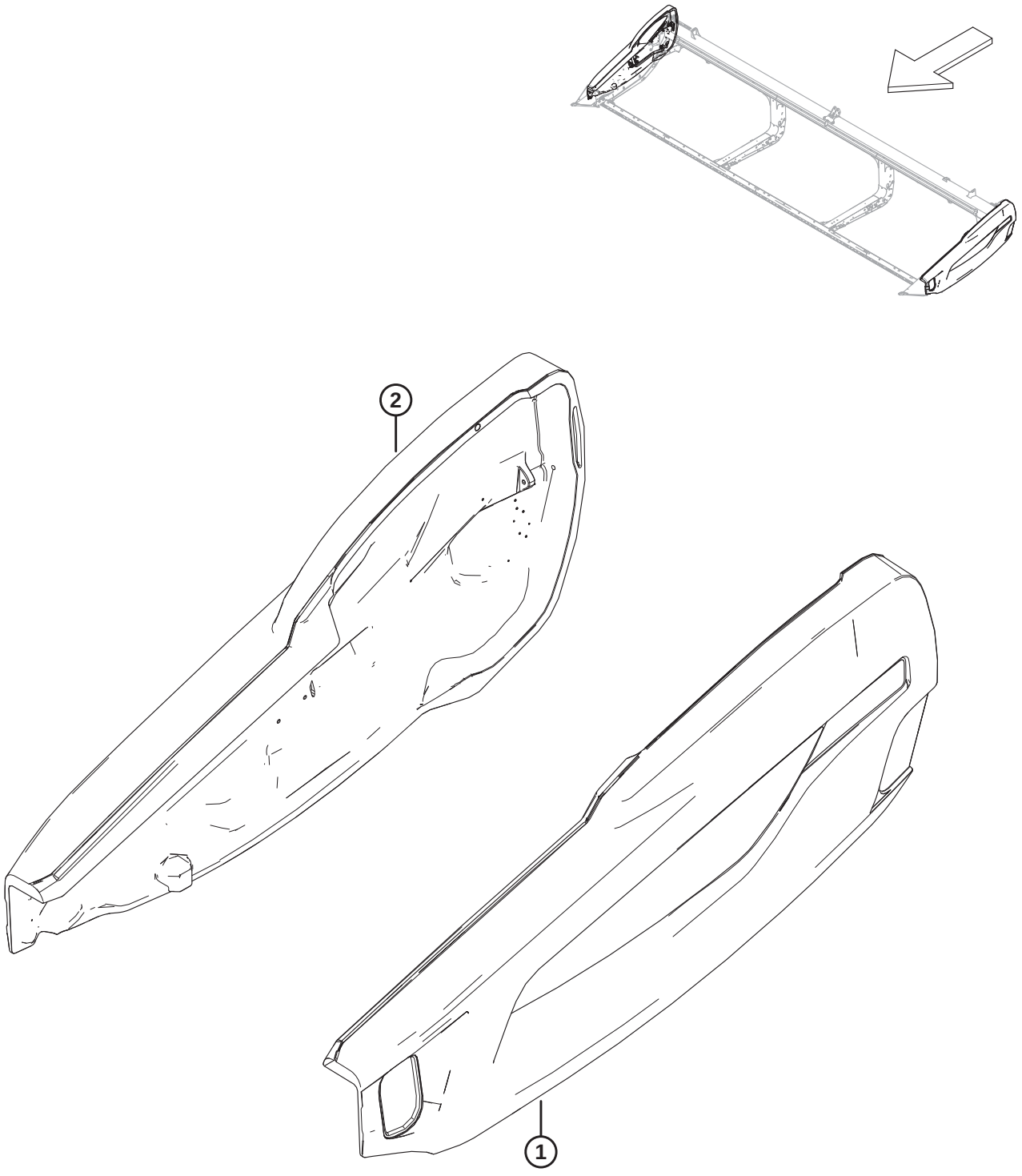

1039650

Ref	Part Number	Description	Qty	Serial Number
1	**360553**	**SHIELD ASSY – NH YELLOW, LH** [15]	**1**	
2	**360449**	**SHIELD ASSY – NH YELLOW, RH** [15]	**1**	
	165524	**REFLECTOR – RED, 230 MM** [16]		

15. Refer to Section *109 Decals – Product Identification, New Holland, page 251* for product identification decals.
16. Refer to Section *106 Decals and Reflectors – FD2 Series, page 245*. This reflector is used on the right endshield only.

10 Endshield Mount Components

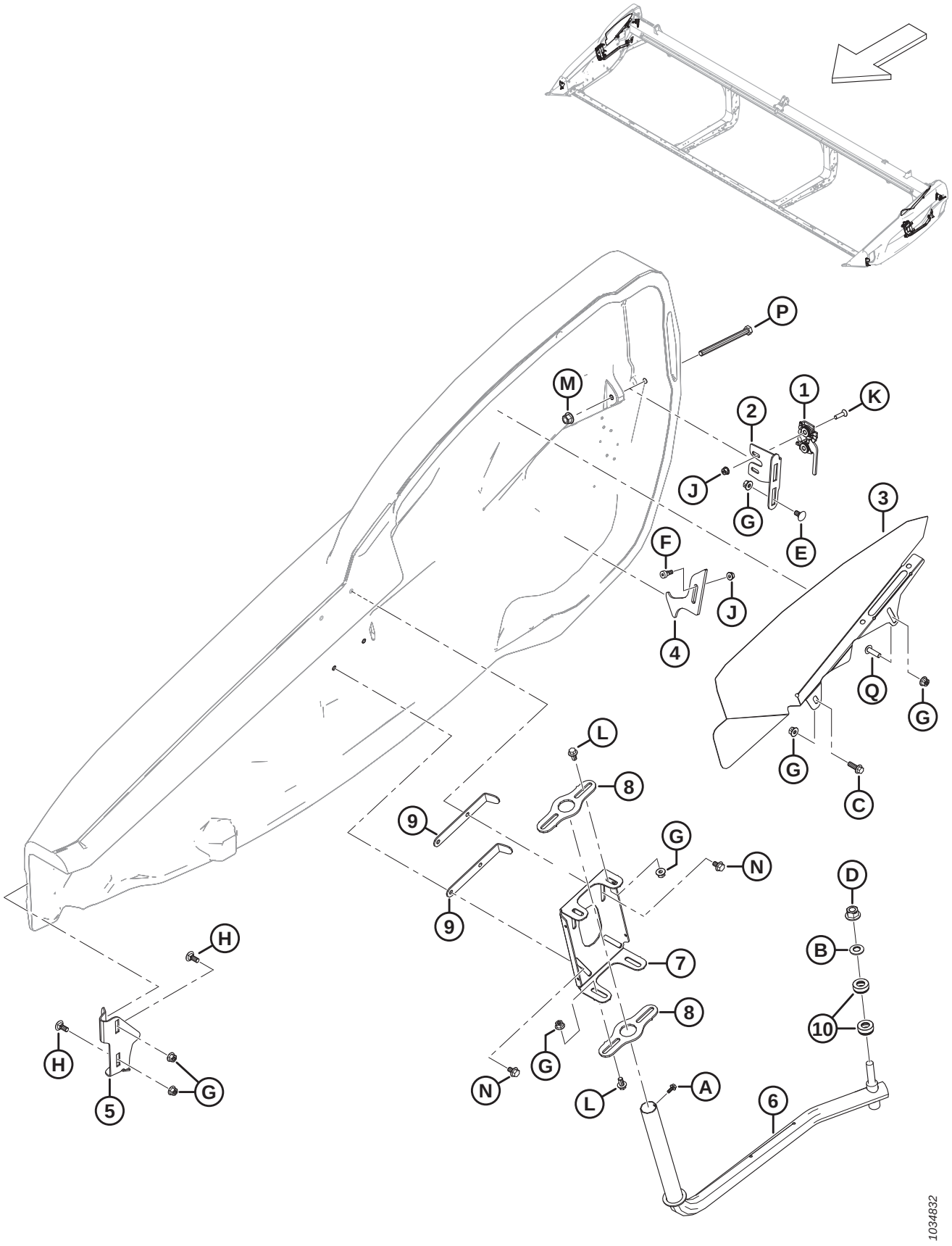

ENDSHIELD MOUNT COMPONENTS

Ref	Part Number	Description	Qty	Serial Number
1	289925	LATCH – RH 2 STAGE	1	
	289924	LATCH – LH 2 STAGE	1	
2	289621	SUPPORT – RH LATCH	1	
	289618	SUPPORT – LH LATCH	1	
3	340714	SHIELD – RH NECK	1	
	340111	SHIELD – LH NECK	1	
4	289519	LATCH – RH	1	
	289520	LATCH – LH	1	
5	289483	SUPPORT – RH FRONT	1	
	289380	SUPPORT – LH FRONT	1	
6	289439	ARM – RH WELDT	1	
	289375	ARM – LH WELDT	1	
7	313432	PIVOT – SHIELD RH	1	
	313303	PIVOT – SHIELD LH	1	
8	313304	PIVOT	4	
9	313783	RETAINER	4	
10	289487	BEARING – THRUST	4	
A	252284	SCREW – HEX WSHR HD M6 X 1 X 16-450HV		
B	184718	WASHER – CON SPRING M16 STL SAE 1050-1075		
C	184665	BOLT – HEX FLG HD M10 X 1.5 X 30-10.9-AA1J		
D	136736	NUT – HEX FLG TOP LOCK M16 X 1.5-10-AA2L		
E	136178	BOLT – RHSN M10 X 1.5 X 20-8.8-AA1J		
F	135894	SCREW – HEX SOC HD SHLDR M10		
G	135799	NUT – HEX FLG CTR LOC M10 X 1.5-10		
H	135785	BOLT – RHSN M10 X 1.5 X 25-8.8-AA1J		
J	135337	NUT – HEX FLG CTR LK M8 X 1.25-8-AA1J		
K	135336	SCREW – CSK MCH M8 X 1.25 X 30 GR5 AA1J		
L	152655	BOLT – HEX FLG HD M10 X 1.5 X 20-8.8-AA1J		
M	136431	NUT – HEX FLG CTR LOC M12 X 1.75-10		
N	136231	BOLT – HEX SER FLG HD M10 X 1.5 X 16 X SPCL-8.8		
P	135696	BOLT – HEX HD M12 X 1.75 X 150-8.8-AA1J		
Q	320327	SCREW – TORX TRUSS HD M10 X 1.5 X 35-SPCL-8.8-ZINC		

11 Draper

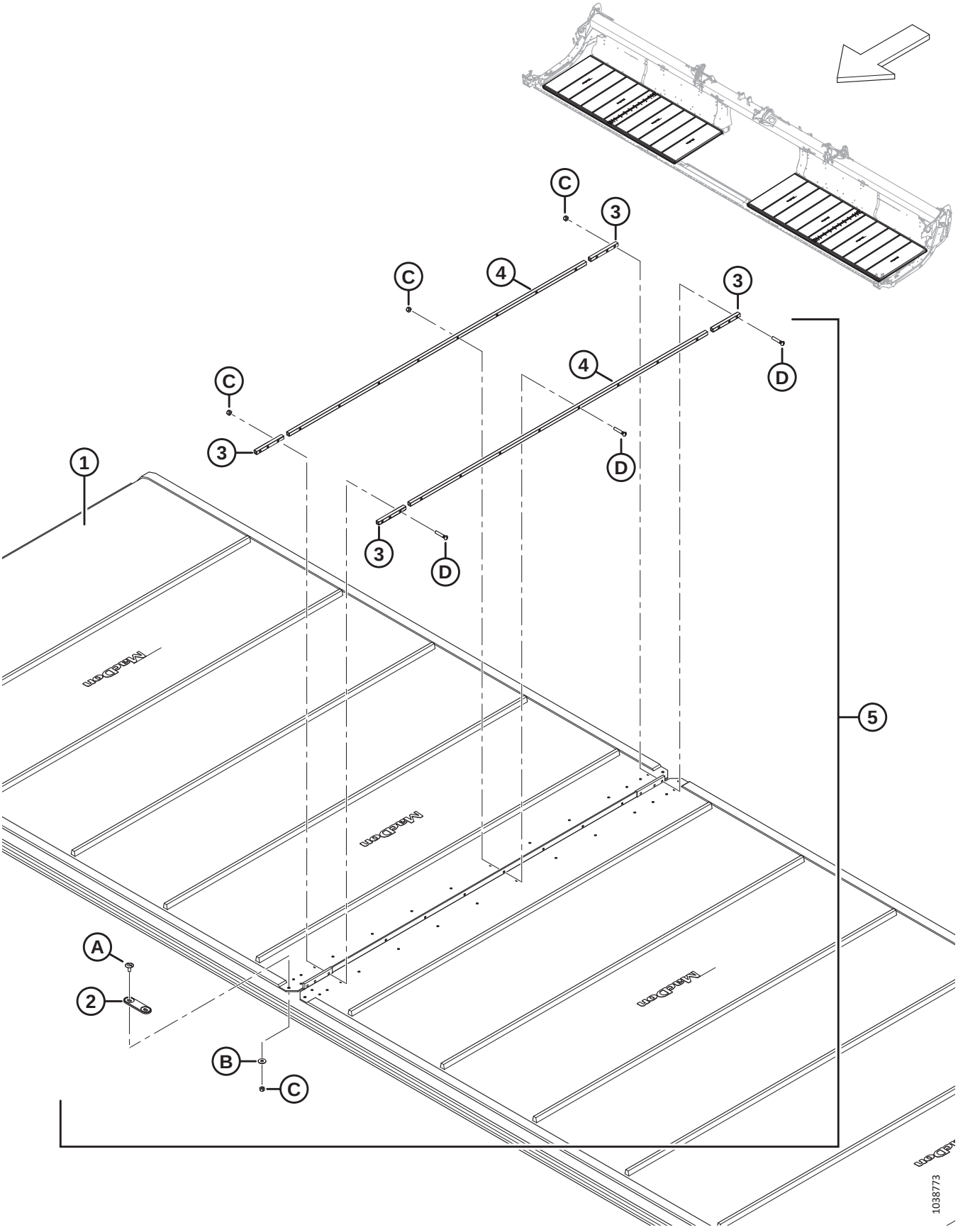

Ref	Part Number	Description	Qty	Serial Number
1	**319088**	**KIT – DRAPER 25 FT, 50 INCH WIDE** [17]	**2**	
	319099	KIT – DRAPER 30 FT, 50 INCH WIDE [17]	2	
	319100	KIT – DRAPER 35 FT, 50 INCH WIDE [17]	2	
	319101	KIT – DRAPER 40 FT, 50 INCH WIDE [17]	2	
	319102	KIT – DRAPER 41 FT, 50 INCH WIDE [17]	2	
	319103	KIT – DRAPER 45 FT, 50 INCH WIDE [17]	2	
	319104	KIT – DRAPER 50 FT, 50 INCH WIDE	2	
	319105	KIT – DRAPER REPAIR 50 INCH, 500 MM (19.7 IN.) LG [18]	A/R	
	319540	KIT – BULK DRAPER 50 IN. [19]	OPT	
2	319662	CONNECTOR – BRIDGE	2	
3	NSS	BAR – CONNECTOR DRAPER HEM [20]	8	
	319347	KIT – DRAPER CONNECTOR 50 INCH, HEM [21]	A/R	
4	NSS	BAR – CONNECTOR DRAPER CENTER [22]	4	
	319346	KIT – DRAPER CONNECTOR 50 INCH, CENTER [23]	A/R	
5	319095	KIT – DRAPER CONNECTOR 50 INCH [24]	2	
A	320148	SCREW – TRUSS SLT HD M6 X 1.0 16-SPCL-8.8-ZINC		
B	184706	WASHER – FLAT LARGE M6-200HV		
C	286479	NUT – CTR LOC CSK M6 X 1 50PK [25]		
D	319345	KIT – SCREW M6 X 34 C/W NUT 30PK [26]		

17. The kit includes draper (NSS) and draper connector kit (MD #319095).
18. The kit includes draper repair piece (NSS) and two draper connector kits (MD #319095).
19. The kit includes a bulk draper roll and instructions.
20. Not sold separately (NSS). Order either the draper hem connector kit (MD #319347) or the draper connector kit (MD #319095).
21. The kit includes two draper hem connector bars (NSS) and hardware (MD #226259 and MD #320240).
22. Not sold separately (NSS). Order either the draper center connector kit (MD #319346) or the draper connector kit (MD #319095).
23. The kit includes two draper center connector bars (NSS) and hardware (MD #226259 and MD #320240).
24. One kit per side; Includes two draper center connector bars (NSS), four draper hem connector bars (NSS), bridge connector (MD #319662), and hardware.
25. The kit includes 50 nuts.
26. The kit includes 30 screws and 30 nuts.

12 Draper – Backsheet Panels (FD225)

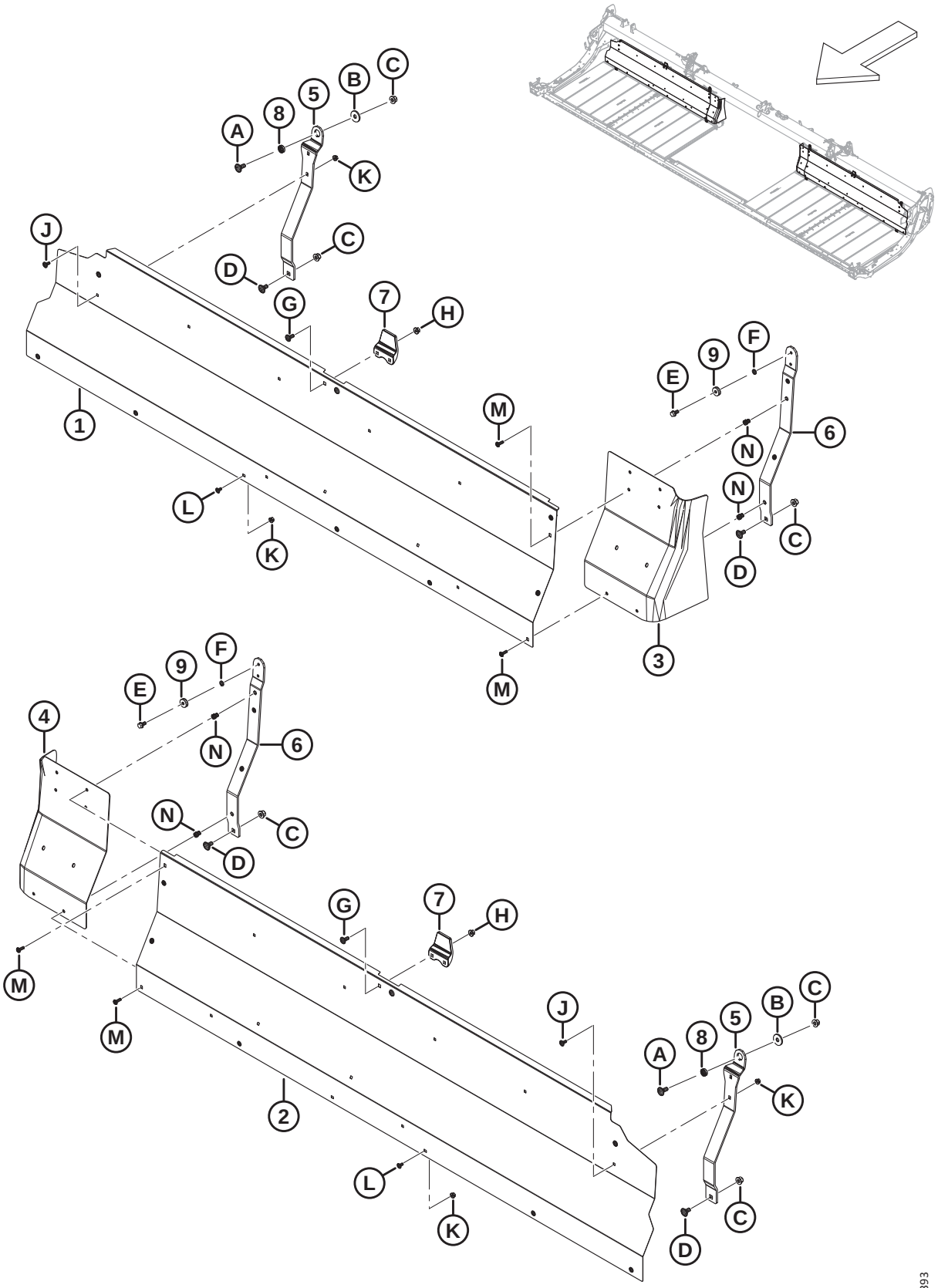

DRAPER – BACKSHEET PANELS (FD225)

Ref	Part Number	Description	Qty	Serial Number
1	275405	PANEL – BACKSHEET 25 FT RH	1	
2	275404	PANEL – BACKSHEET 25 FT LH	1	
3	319223	EXTENSION – BACKSHEET RH	1	
4	319222	EXTENSION – BACKSHEET LH	1	
5	319394	SUPPORT – DECK FLEX OUTBOARD	2	
6	319366	SUPPORT – DECK FLEX INBOARD [27]	2	
7	145840	GUIDE – BACKSHEET	2	
8	275563	SPACER – SPECIAL ROTATION	2	
9	18867	BEARING – BALL CYL OD C/W TWO SEALS	2	
A	184667	BOLT – RHSN M12 X 1.75 X 30-8.8-ZINC		
B	275623	WASHER – FLAT		
C	136431	NUT – HEX FLG CTR LOC M12 X 1.75-10		
D	135903	BOLT – RHSN M12 X 1.75 X 25-8.8-ZINC		
E	101897	SCREW – HEX WASH HD 3/8 NC X 3/4		
F	18637	WASHER – REG. LOCK 3/8 IN. NOM. I.D.		
G	135785	BOLT – RHSN M10 X 1.5 X 25-8.8-AA1J		
H	135799	NUT – HEX FLG CTR LOC M10 X 1.5-10		
J	197171	BOLT – RHSN M8 X 1.25 X 20-8.8-ZINC		
K	135337	NUT – HEX FLG CTR LK M8 X 1.25-8-AA1J		
L	191489	BOLT – RHSSN TFL M8 X 1.25 X 16-8.8-AA1J		
M	320290	SCREW – TORX TRUSS HD M8 X 1.25 X 25-SPCL-8.8-ZINC		
N	320181	RIVNUT – M8 X 1.25 HEX 3.8-7.9		

27. The kit includes inboard flex deck support assembly (NSS) and screw (MD #101897).

13 Draper – Backsheet Panels (FD230, FD235, FD240, and FD241)

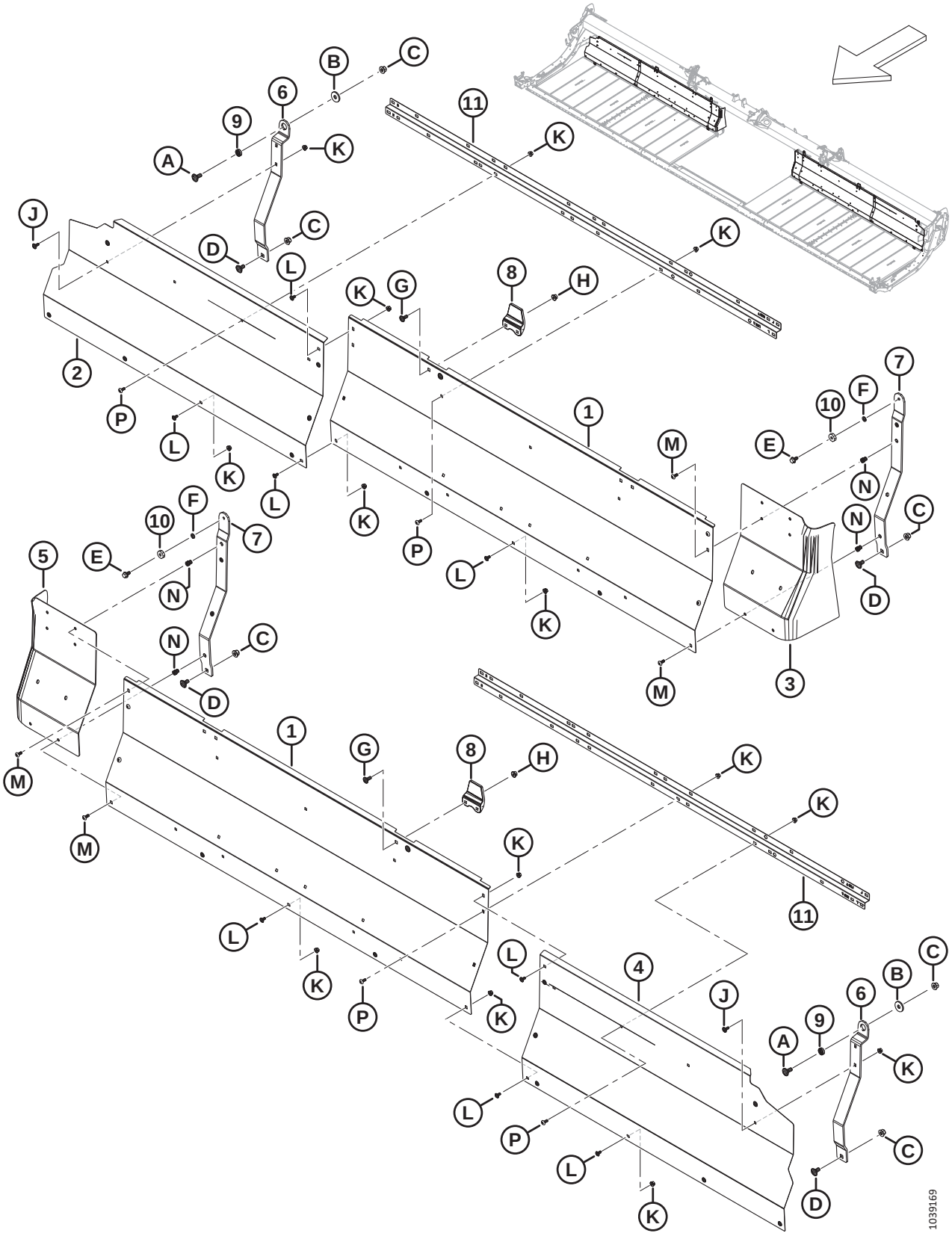

Ref	Part Number	Description	Qty	Serial Number
1	275837	PANEL – BACKSHEET 30, 35, 40, 41 FT INNER	2	
2	275461	PANEL – BACKSHEET 30 FT RH OUTER	1	
	275320	PANEL – BACKSHEET 35 FT RH OUTER	1	
	275287	PANEL – BACKSHEET 40 FT RH OUTER	1	
	275484	PANEL – BACKSHEET 41 FT RH OUTER	1	
3	319223	EXTENSION – BACKSHEET RH	1	
4	275460	PANEL – BACKSHEET 30 FT LH OUTER	1	
	275319	PANEL – BACKSHEET 35 FT LH OUTER	1	
	275286	PANEL – BACKSHEET 40 FT LH OUTER	1	
	275483	PANEL – BACKSHEET 41 FT LH OUTER	1	
5	319222	EXTENSION – BACKSHEET LH	1	
6	319394	SUPPORT – DECK FLEX OUTBOARD	2	
7	**319366**	**SUPPORT – DECK FLEX INBOARD** [28]	**2**	
8	145840	GUIDE – BACKSHEET	2	
9	275563	SPACER – SPECIAL ROTATION	2	
10	18867	BEARING – BALL CYL OD C/W TWO SEALS	2	
11	**360509**	**SUPPORT – BACKSHEET**	**2**	
A	184667	BOLT – RHSN M12 X 1.75 X 30-8.8-ZINC		
B	275623	WASHER – FLAT		
C	136431	NUT – HEX FLG CTR LOC M12 X 1.75-10		
D	135903	BOLT – RHSN M12 X 1.75 X 25-8.8-ZINC		
E	**101897**	**SCREW – HEX WASH HD 3/8 NC X 3/4**		
F	**18637**	**WASHER – REG. LOCK 3/8 IN. NOM. I.D.**		
G	135785	BOLT – RHSN M10 X 1.5 X 25-8.8-AA1J		
H	135799	NUT – HEX FLG CTR LOC M10 X 1.5-10		
J	197171	BOLT – RHSN M8 X 1.25 X 20-8.8-ZINC		
K	135337	NUT – HEX FLG CTR LK M8 X 1.25-8-AA1J		
L	191489	BOLT – RHSSN TFL M8 X 1.25 X 16-8.8-AA1J		
M	**320290**	**SCREW – TORX TRUSS HD M8 X 1.25 X 25-SPCL-8.8-ZINC**		
N	320181	RIVNUT – M8 X 1.25 HEX 3.8-7.9		
P	**320190**	**SCREW – TORX TRUSS HD M8 X 1.25 X 20-SPCL-8.8-ZINC**		

28. The kit includes inboard flex deck support assembly (NSS) and screw (MD #101897).

14 Draper – Backsheet Panels (FD245 and FD250)

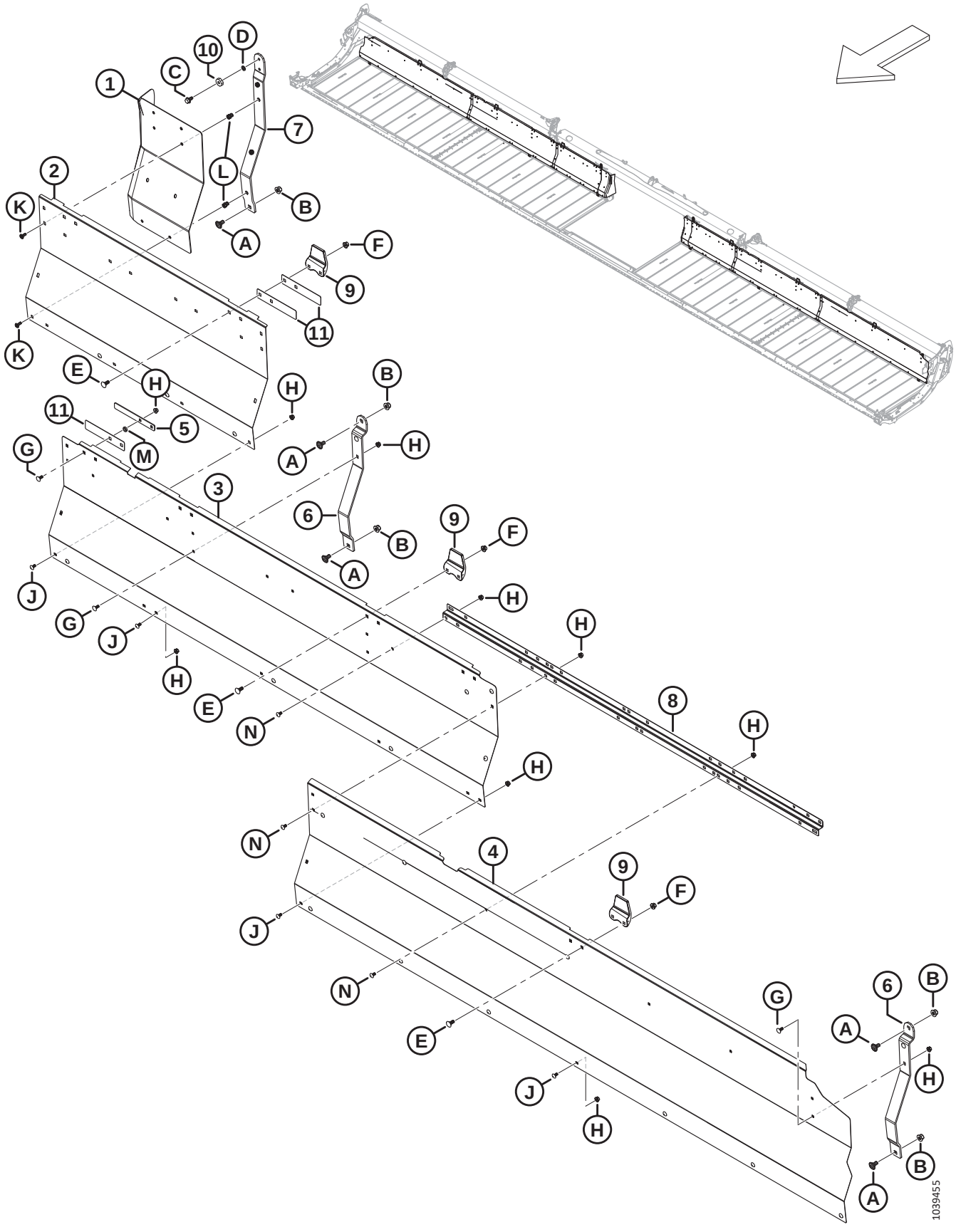

Ref	Part Number	Description	Qty	Serial Number
1	319222	EXTENSION – BACKSHEET LH	1	
	319223	EXTENSION – BACKSHEET RH	1	
2	275965	PANEL – BACKSHEET LH/RH INBOARD	2	
3	275676	PANEL – BACKSHEET LH/RH MIDDLE	2	
4	275319	PANEL – BACKSHEET 45 FT LH OUTER	1	
	275320	PANEL – BACKSHEET 45 FT RH OUTER	1	
	275286	PANEL – BACKSHEET 50 FT LH OUTER	1	
	275287	PANEL – BACKSHEET 50 FT RH OUTER	1	
5	319404	PLATE – RETAINER BACKSHEET	2	
6	275675	SUPPORT – DECK	4	
7	**319366**	**SUPPORT – DECK FLEX INBOARD** [29]	**2**	
8	**360509**	**SUPPORT – BACKSHEET**	**2**	
9	145840	GUIDE – BACKSHEET	6	
10	18867	BEARING – BALL CYL OD C/W TWO SEALS	2	
11	319403	PLATE – GUIDE BACKSHEET	6	
A	135903	BOLT – RHSN M12 X 1.75 X 25-8.8-ZINC		
B	136431	NUT – HEX FLG CTR LOC M12 X 1.75-10		
C	**101897**	**SCREW – HEX WASH HD 3/8 NC X 3/4**		
D	**18637**	**WASHER – REG. LOCK 3/8 IN. NOM. I.D.**		
E	135785	BOLT – RHSN M10 X 1.5 X 25-8.8-AA1J		
F	135799	NUT – HEX FLG CTR LOC M10 X 1.5-10		
G	197171	BOLT – RHSN M8 X 1.25 X 20-8.8-ZINC		
H	135337	NUT – HEX FLG CTR LK M8 X 1.25-8-AA1J		
J	191489	BOLT – RHSSN TFL M8 X 1.25 X 16-8.8-AA1J		
K	**320290**	**SCREW – TORX TRUSS HD M8 X 1.25 X 25-SPCL-8.8-ZINC**		
L	320181	RIVNUT – M8 X 1.25 HEX 3.8-7.9		
M	255930	WASHER – FLAT		
N	**320190**	**SCREW – TORX TRUSS HD M8 X 1.25 X 20-SPCL-8.8-ZINC**		

29. The kit includes inboard flex deck support assembly (NSS) and screw (MD #101897).

15 Draper – Tensioner

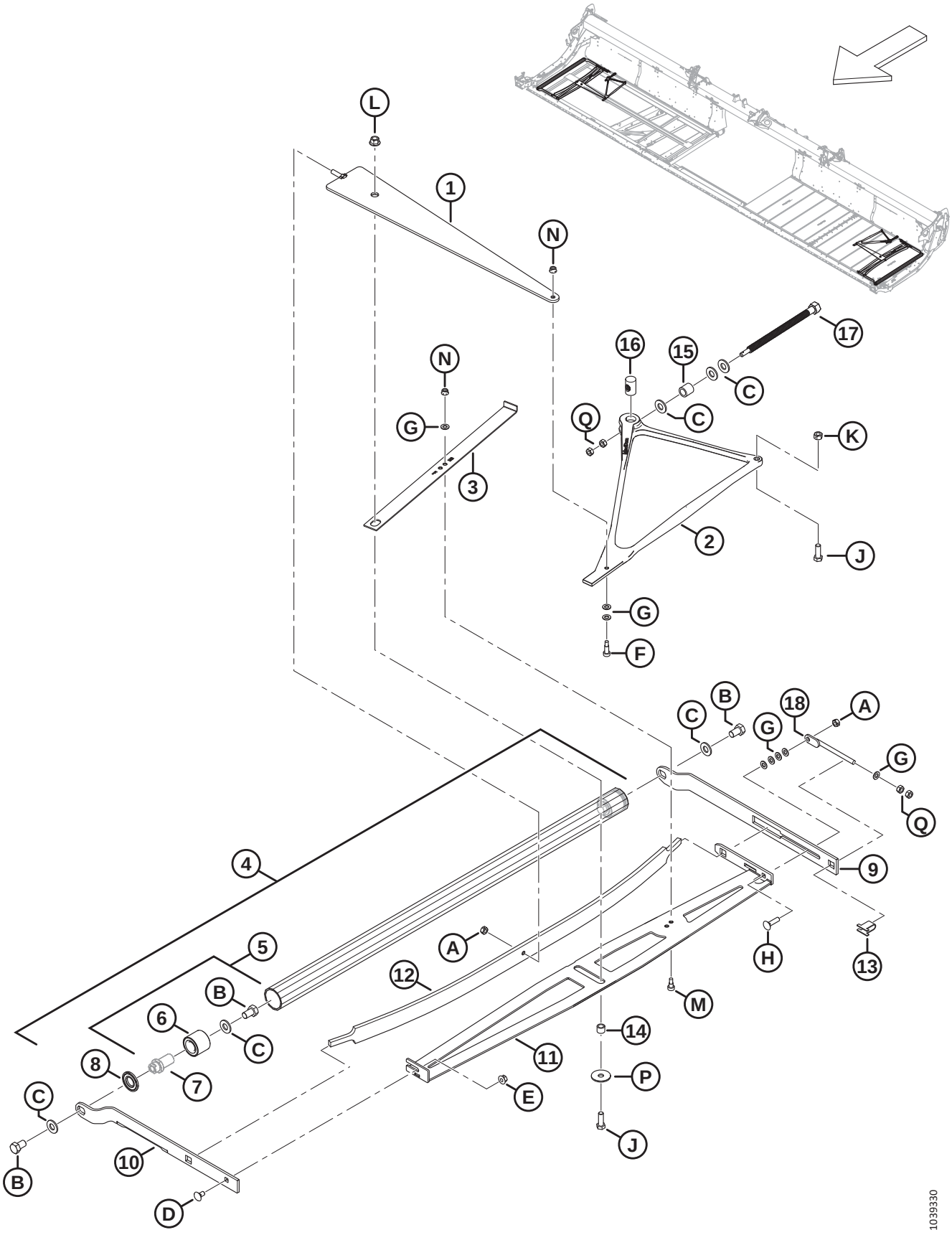

DRAPER – TENSIONER

Ref	Part Number	Description	Qty	Serial Number
1	319051	MEMBER – COMPRESSION WELDT	**2**	
2	275902	CASTING – TENSIONER BELLCRANK	**2**	
3	275877	INDICATOR – TENSIONER	**2**	
4	275211	IDLER ROLLER ASSY SERVICE [30]	**2**	
5	165735	PIN ASSY – DRAPER ROLLER [31]	**4**	
6	132607	BEARING – DOUBLE ROW BALL 52 OD X 25 BORE	**4**	
7	NSS	PIN [32]		
8	120845	SEAL – NILOS LSTO STEEL DISK	**4**	
9	275324	ARM – IDLER ROLLER REAR	**2**	
10	**319708**	**ARM – RH FRONT IDLER ROLLER**	**1**	
	319707	**ARM – LH FRONT IDLER ROLLER**	**1**	
11	275375	MEMBER – RH STABILIZER WELDT	1	
	275348	MEMBER – LH STABILIZER WELDT	1	
12	227747	SPRING – LEAF	**2**	
13	275232	SUPPORT – ADJUSTER SCREW	**2**	
14	132531	SPACER	**2**	
15	227656	SPACER – TENSIONER BOLT	**2**	
16	275879	NUT – SPECIAL LEAD-SCREW	**2**	
17	320167	BOLT – HEX HD M16 X 4.0-SPCL-8.8-AA1J	**2**	
18	227914	BOLT – ADJUSTER WELDT	**2**	
A	320206	NUT – HEX CTR LOC M10 X 1.5-8-ZINC		
B	145249	BOLT – HEX HD TFL 5/8-18 X 1.0 GR5-AA1J		
C	30441	WASHER – HARDENED ASTM F436 5/8		
D	135785	BOLT – RHSN M10 X 1.5 X 25-8.8-AA1J		
E	135799	NUT – HEX FLG CTR LOC M10 X 1.5-10		
F	197275	SCREW – HEX SOC HD SHLDR M10 X 20		
G	184711	WASHER – FLAT REG M10-200HV-AA1J		
H	152732	BOLT – RHSN M10 X 1.5 X 40-8.8-AA1J		
J	152730	BOLT – HEX HD TFL M12 X 1.75 X 35-10.9-AA1J		
K	136759	NUT – HEX CTR LOC M12 X 1.75-8-AA1J		
L	136431	NUT – HEX FLG CTR LOC M12 X 1.75-10		
M	135894	SCREW – HEX SOC HD SHLDR M10		
N	135337	NUT – HEX FLG CTR LK M8 X 1.25-8-AA1J		
P	42592	WASHER – FLAT		
Q	30505	NUT – HEX M10 X 1.5-10-AA1J		

30. Includes two pin assemblies (MD #165735) and two seals (MD #120845).
31. Includes pin (NSS), bearing (MD #132607), and hardware (MD #30441, MD #145249).
32. Not sold separately; included in pin assembly MD #165735.

16 Draper – Drive Roller

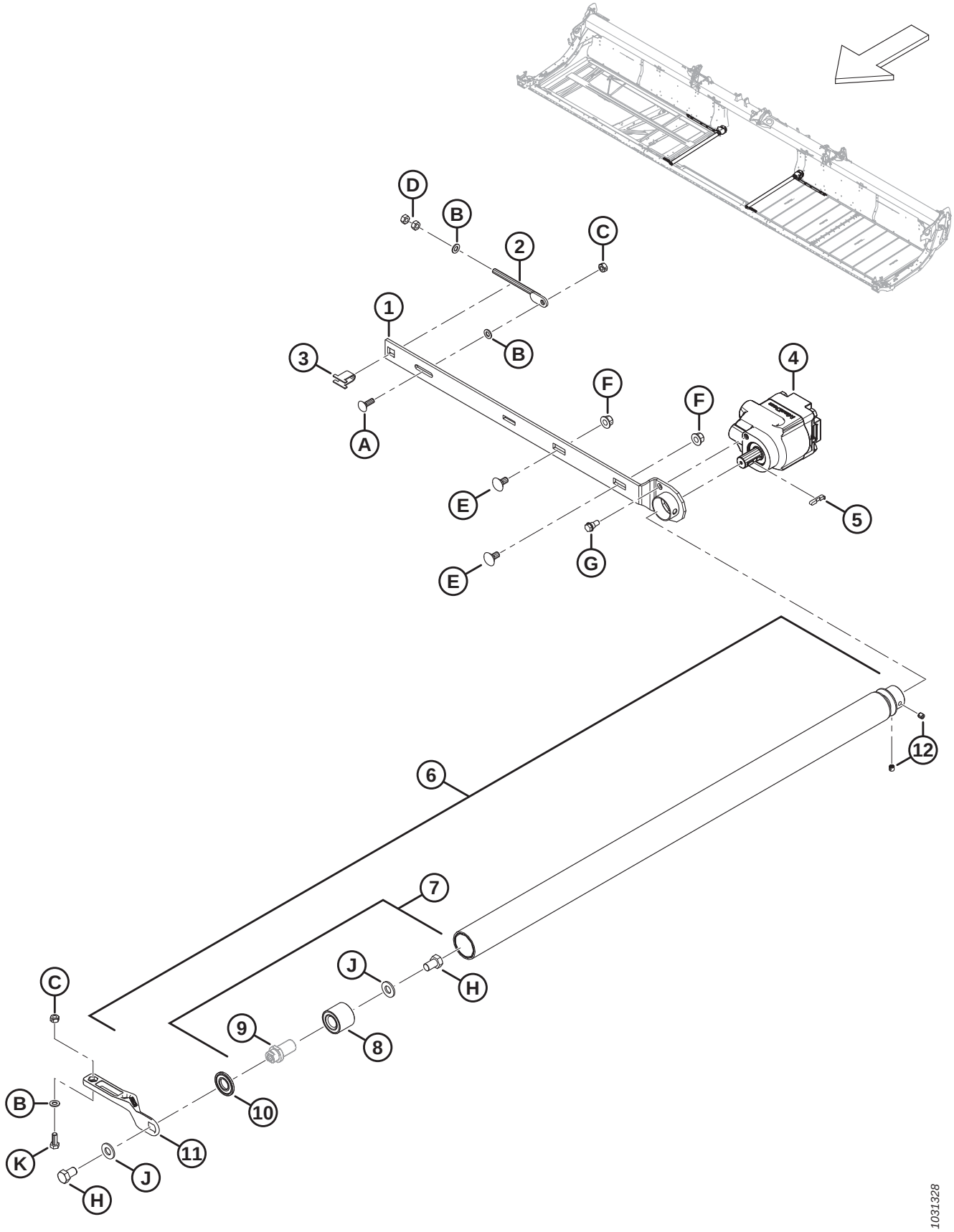

DRAPER – DRIVE ROLLER

Ref	Part Number	Description	Qty	Serial Number
1	275332	ARM – DRIVE ROLLER WELDT	1	
2	227914	BOLT – ADJUSTER WELDT	1	
3	275232	SUPPORT – ADJUSTER SCREW	1	
4	275860	MOTOR – HYD GEAR DRAPER DRIVE	1	
	319583	SEAL KIT – DRAPER DRIVE MOTOR		
5	275864	KEY – DRAPER DRIVE MOTOR	1	
6	319191	DRIVE ROLLER ASSY SERVICE [33]	1	
7	165735	PIN ASSY – DRAPER ROLLER [34]	1	
8	132607	BEARING – DOUBLE ROW BALL 52 OD X 25 BORE	1	
9	NSS	PIN [35]		
10	120845	SEAL – NILOS LSTO STEEL DISK	1	
11	319265	CASTING – RH/LH FRONT DRIVE ARM	2	
12	320182	SCREW – SET SOC M10 X 1.5 X 10-8.8-BO	2	
A	184662	BOLT – RHSN TFL M10 X 1.5 X 30-8.8-AA1J		
B	184711	WASHER – FLAT REG M10-200HV-AA1J		
C	320206	NUT – HEX CTR LOC M10 X 1.5-8-ZINC		
D	30505	NUT – HEX M10 X 1.5-10-AA1J		
E	135903	BOLT – RHSN M12 X 1.75 X 25-8.8-ZINC		
F	136431	NUT – HEX FLG CTR LOC M12 X 1.75-10		
G	172259	BOLT – SHOULDER .375-16 UNC-AA1J		
H	145249	BOLT – HEX HD TFL 5/8-18 X 1.0 GR5-AA1J		
J	30441	WASHER – HARDENED ASTM F436 5/8		
K	30627	BOLT – HEX HD TFL M10 X 1.5 X 25-8.8-A3L		

33. Includes vulcanized roller (NSS), pin assembly (MD #165735), seal (MD #120845), and two set screws (MD #320182).
34. Includes pin (NSS), bearing (MD #132607), and hardware (MD #30441, MD #145249).
35. Not sold separately; included in pin assembly (MD #165735).

17 Draper – Decks and Tracks (FD225)

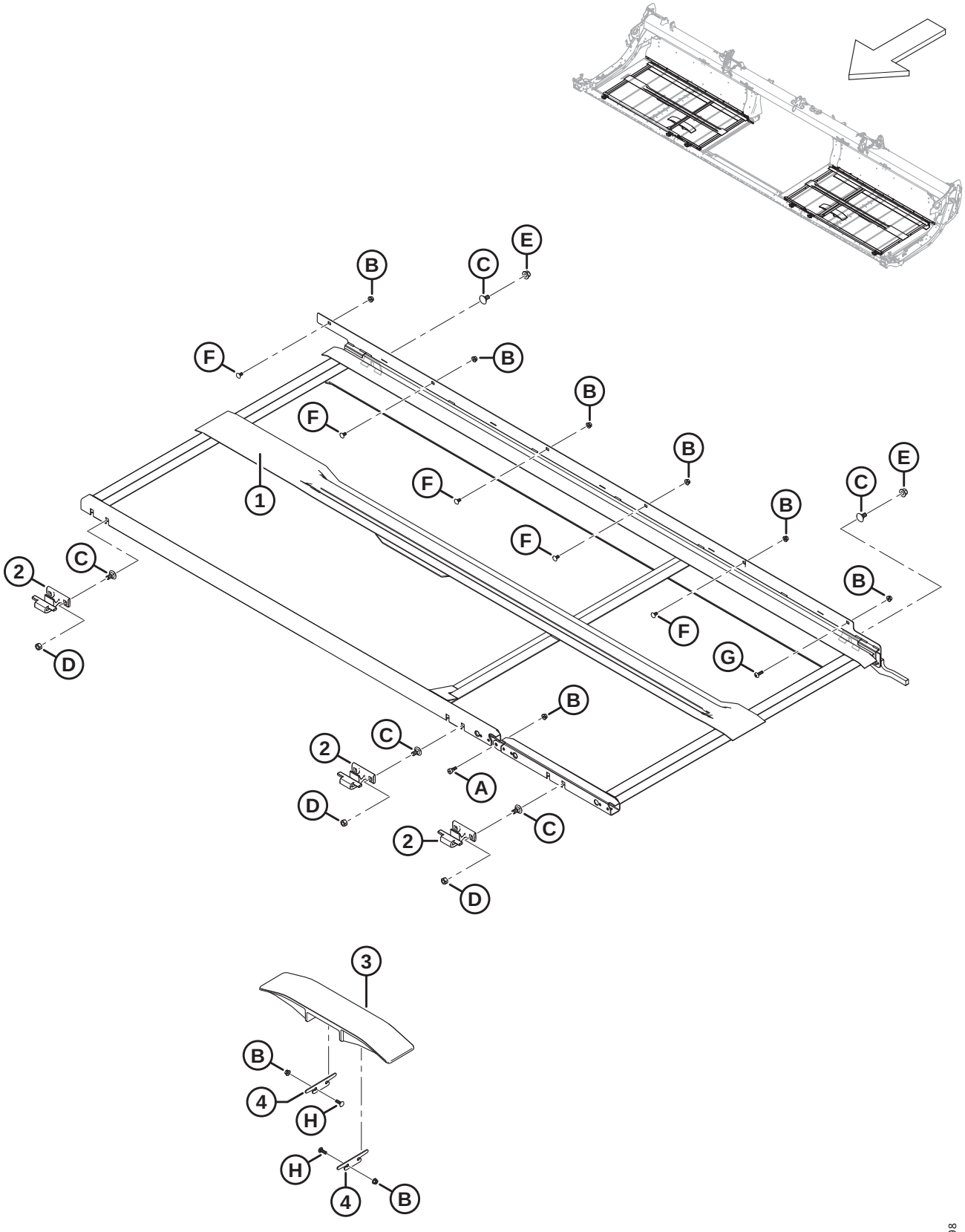

Ref	Part Number	Description	Qty	Serial Number
1	319588	DECK WELDT – 25 FT RH FLEX	1	
	319587	DECK WELDT – 25 FT LH FLEX	1	
2	319225	CASTING – DECK FRONT HOOK	6	
3	340841	TRACK – STANDARD PLASTIC	2	
4	340681	SHIM – DRAPER TRACK	4	
A	135894	SCREW – HEX SOC HD SHLDR M10		
B	135337	NUT – HEX FLG CTR LK M8 X 1.25-8-AA1J		
C	135903	BOLT – RHSN M12 X 1.75 X 25-8.8-ZINC		
D	136759	NUT – HEX CTR LOC M12 X 1.75-8-AA1J		
E	136431	NUT – HEX FLG CTR LOC M12 X 1.75-10		
F	191489	BOLT – RHSSN TFL M8 X 1.25 X 16-8.8-AA1J		
G	320290	SCREW – TORX TRUSS HD M8 X 1.25 X 25-SPCL-8.8-ZINC		
H	136824	BOLT – RHSSN M8 X 1.25 X 25-8.8-AA1J		

18 Draper – Decks and Tracks (FD230, FD235, FD240, and FD241)

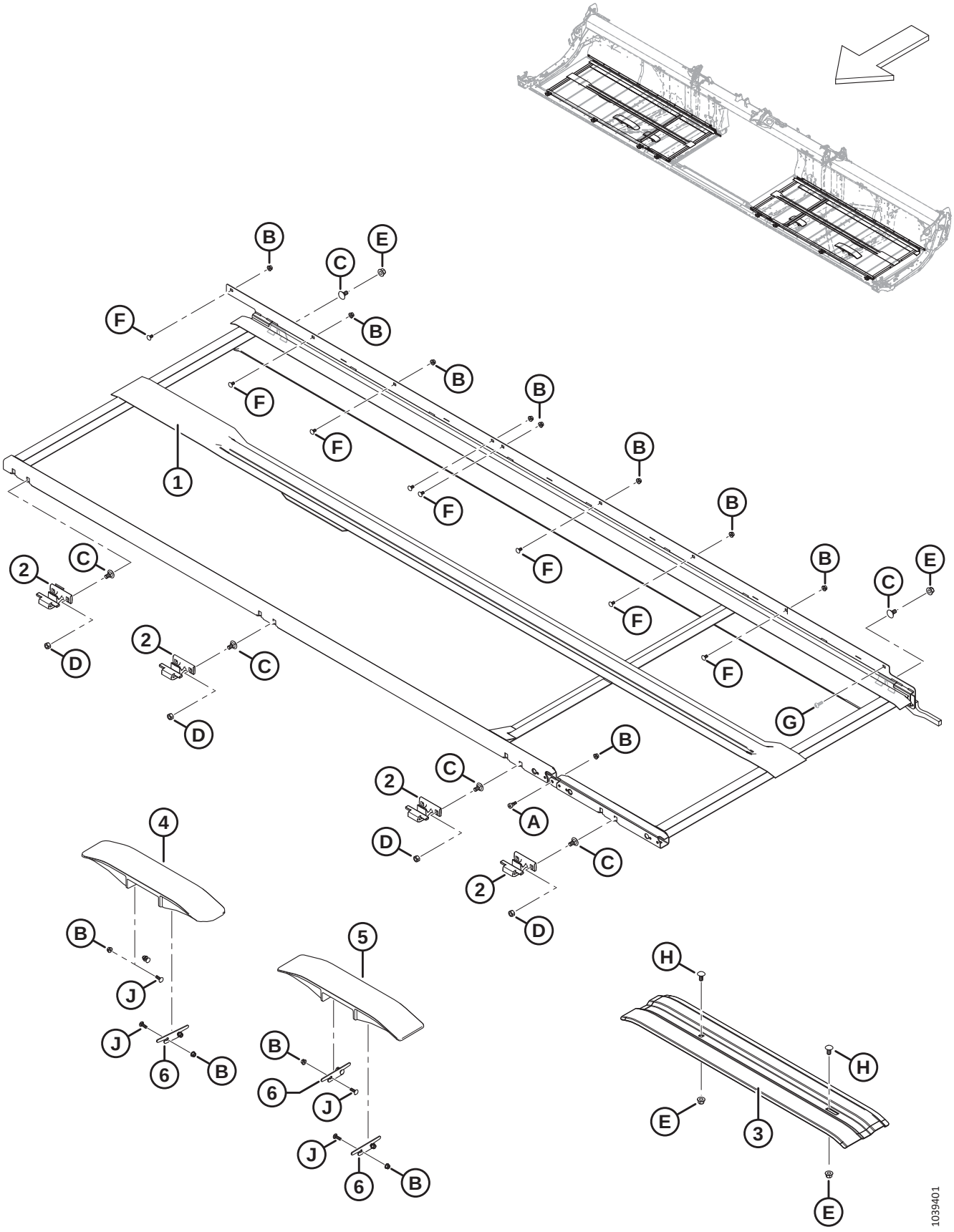

Ref	Part Number	Description	Qty	Serial Number
1	275266	DECK WELDT – 30 FT RH FLEX	1	
	275265	DECK WELDT – 30 FT LH FLEX	1	
	275505	DECK WELDT – 35 FT RH FLEX	1	
	275504	DECK WELDT – 35 FT LH FLEX	1	
	275199	DECK WELDT – 40 FT RH FLEX	1	
	275200	DECK WELDT – 40 FT LH FLEX	1	
	275514	DECK WELDT – 41 FT RH FLEX	1	
	275513	DECK WELDT – 41 FT LH FLEX	1	
2	319225	CASTING – DECK FRONT HOOK [36]		
3	319376	SUPPORT – LOWER DRAPER TRACK (RH FD230, FD235 ONLY) [37]	**A/R**	**–451189**
	319378	SUPPORT – LOWER DRAPER TRACK (RH FD240, FD241 ONLY) [37]	**A/R**	**–451189**
	319228	SUPPORT – LOWER DRAPER TRACK (LH FD230 ONLY) [37]	**A/R**	**–451189**
	319377	SUPPORT – LOWER DRAPER TRACK (LH FD235, FD240, FD241 ONLY) [37]	**A/R**	**–451189**
4	**360151**	**TRACK – ANGLED PLASTIC**	**1**	**451190–**
5	**340841**	**TRACK – STANDARD PLASTIC** [38]		**451190–**
	360150	**TRACK – SHORT PLASTIC (FD230 ONLY)** [39]		**451190–**
6	**340681**	**SHIM – DRAPER TRACK**	**6**	**451190–**
A	135894	SCREW – HEX SOC HD SHLDR M10		
B	135337	NUT – HEX FLG CTR LK M8 X 1.25-8-AA1J		
C	135903	BOLT – RHSN M12 X 1.75 X 25-8.8-ZINC		
D	136759	NUT – HEX CTR LOC M12 X 1.75-8-AA1J		
E	136431	NUT – HEX FLG CTR LOC M12 X 1.75-10		
F	191489	BOLT – RHSSN TFL M8 X 1.25 X 16-8.8-AA1J		
G	**320290**	**SCREW – TORX TRUSS HD M8 X 1.25 X 25-SPCL-8.8-ZINC**		
H	152439	BOLT – RHSSN M12 X 1.75 X 25-8.8-AA1J		
J	**136824**	**BOLT – RHSSN M8 X 1.25 X 25-8.8-AA1J**		

36. Quantities: FD230 = 8, FD235 = 10, FD240 = 10, and FD241 = 10.
37. Service part only for model year 2022 and prior headers.
38. Quantities: FD230 = 1, FD235 = 3, FD240 = 3, and FD241 = 3.
39. Short plastic tracks are used on the inboard header frame legs for FD230 headers only. Quantities: FD230 = 2.

19 Draper – Decks and Tracks (FD245 and FD250)

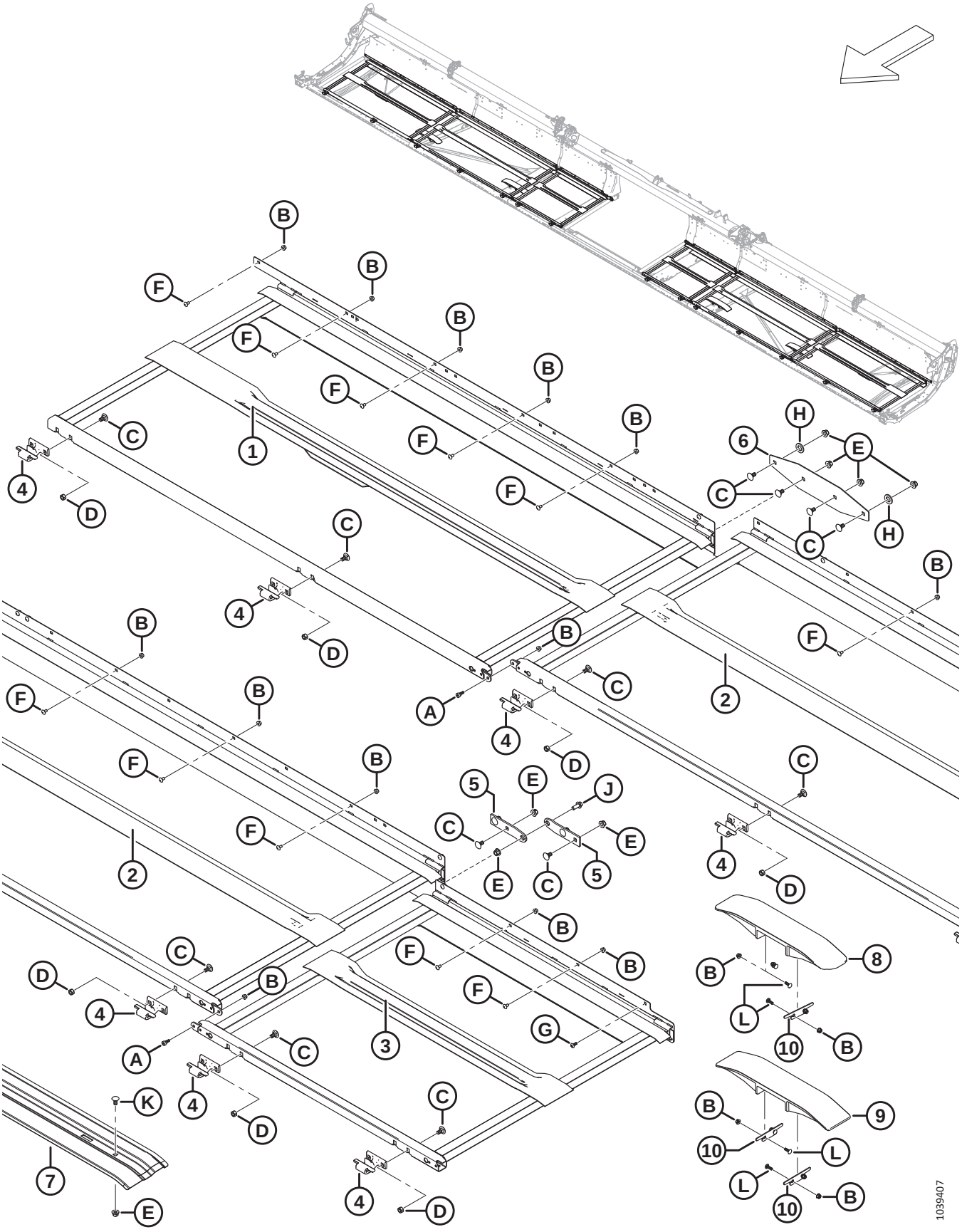

Ref	Part Number	Description	Qty	Serial Number
1	275770	DECK WELDT – RH OUTBOARD	1	
	275960	DECK WELDT – LH OUTBOARD	1	
2	275779	DECK WELDT – 45 FT MIDDLE	2	
	275954	DECK WELDT – 50 FT MIDDLE	2	
3	275641	DECK WELDT – RH INBOARD	1	
	275640	DECK WELDT – LH INBOARD	1	
4	319225	CASTING – DECK FRONT HOOK	14	
5	275688	HINGE – WIDE FRAME DECK	4	
6	275690	PLATE – DECK FRAME JOINT	2	
7	319377	SUPPORT – DRAPER TRACK (RH FD245) [40]	**A/R**	**–451189**
	319378	SUPPORT – DRAPER TRACK (LH FD245) [41]	**A/R**	**–451189**
	319287	SUPPORT – DRAPER TRACK (FD250) [42]	**A/R**	**–451189**
8	**360151**	**TRACK – ANGLED PLASTIC**	**1**	**451190–**
9	**340841**	**TRACK – STANDARD PLASTIC**	**3**	**451190–**
10	**340681**	**SHIM – DRAPER TRACK**	**6**	**451190–**
A	135894	SCREW – HEX SOC HD SHLDR M10		
B	135337	NUT – HEX FLG CTR LK M8 X 1.25-8-AA1J		
C	135903	BOLT – RHSN M12 X 1.75 X 25-8.8-ZINC		
D	136759	NUT – HEX CTR LOC M12 X 1.75-8-AA1J		
E	136431	NUT – HEX FLG CTR LOC M12 X 1.75-10		
F	191489	BOLT – RHSSN TFL M8 X 1.25 X 16-8.8-AA1J		
G	320290	SCREW – TORX TRUSS HD M8 X 1.25 X 25-SPCL-8.8-ZINC		
H	112130	WASHER – HARD ASTM F4363/4 IN. NOM. ID AB0C		
J	148798	BOLT – HEX FLG HD M12 X 1.75 X 30-10.9-AA1J		
K	152439	BOLT – RHSSN M12 X 1.75 X 25-8.8-AA1J		
L	**136824**	**BOLT – RHSSN M8 X 1.25 X 25-8.8-AA1J**		

40. RH draper track support for model year 2022 and prior FD245 headers.
41. LH draper track support for model year 2022 and prior FD245 headers.
42. RH and LH draper track support for model year 2022 and prior FD250 headers.

20 Draper – Seals (FD225)

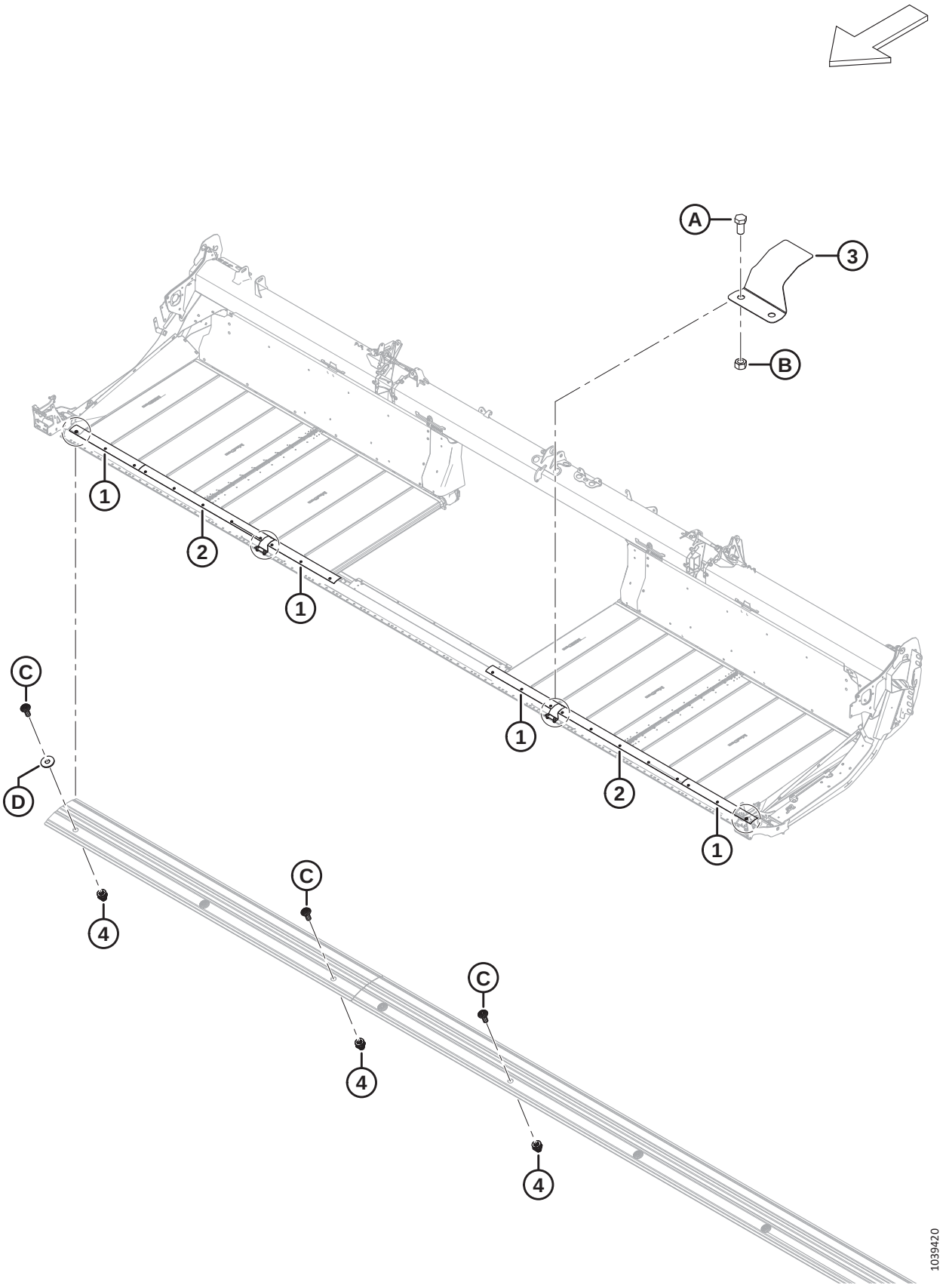

DRAPER – SEALS (FD225)

Ref	Part Number	Description	Qty	Serial Number
1	**319231**	**PLATE – CUTTERBAR SEAL**	**2**	
2	**319229**	**PLATE – CUTTERBAR SEAL**	**4**	
3	**319180**	**COVER – CUTTERBAR HINGE**	**2**	
4	**320448**	**RIVNUT – M8 X 1.25 HEX**	**22**	
A	**50155**	**BOLT – HEX HD TFL M12 X 1.75 X 25-8.8-AA1J**		
B	**184694**	**NUT – HEX M12 X 1.75-8-AA1J**		
C	**320190**	**SCREW – TORX TRUSS HD M8 X 1.25 X 20-SPCL-8.8-ZINC**		
D	**184709**	**WASHER – FLAT LARGE M8-200HV**		

21 Draper – Seals (FD230, FD235, and FD240)

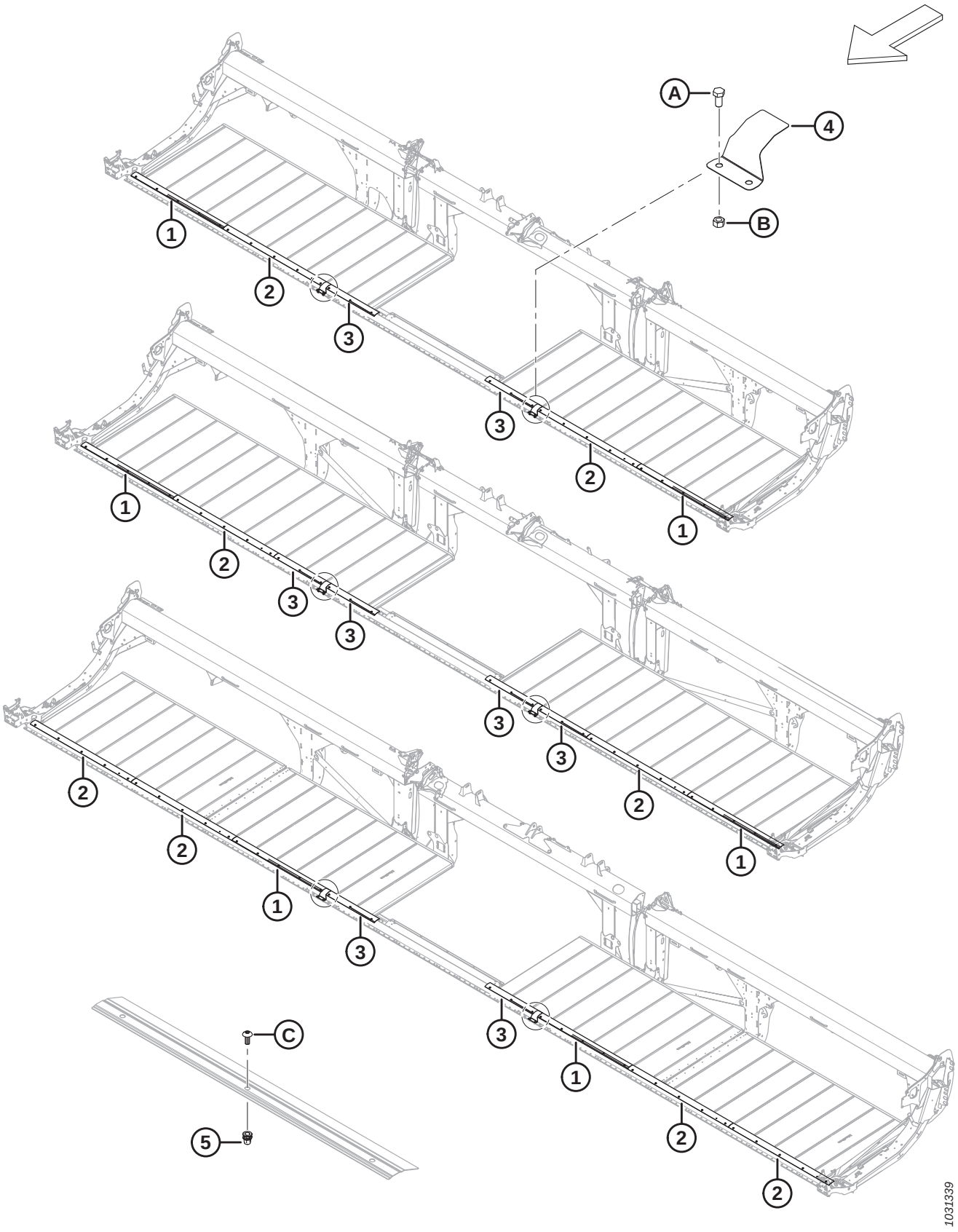

Ref	Part Number	Description	Qty	Serial Number
1	319231	PLATE – CUTTERBAR SEAL [43]		
2	319230	PLATE – CUTTERBAR SEAL [44]		
3	319229	PLATE – CUTTERBAR SEAL [45]		
4	319180	COVER – CUTTERBAR HINGE	2	
5	**320448**	**RIVNUT – M8 X 1.25 HEX** [46]		
A	50155	BOLT – HEX HD TFL M12 X 1.75 X 25-8.8-AA1J		
B	184694	NUT – HEX M12 X 1.75-8-AA1J		
C	320190	SCREW – TORX TRUSS HD M8 X 1.25 X 20-SPCL-8.8-ZINC		

43. Quantities: FD230 = 2, FD235 = 2, and FD240 = 2.
44. Quantities: FD230 = 2, FD235 = 2, and FD240 = 4.
45. Quantities: FD230 = 2, FD235 = 4, and FD240 = 2.
46. Quantities: FD230 = 26, FD235 = 32, and FD240 = 36.

22 Draper – Seals (FD241, FD245, and FD250)

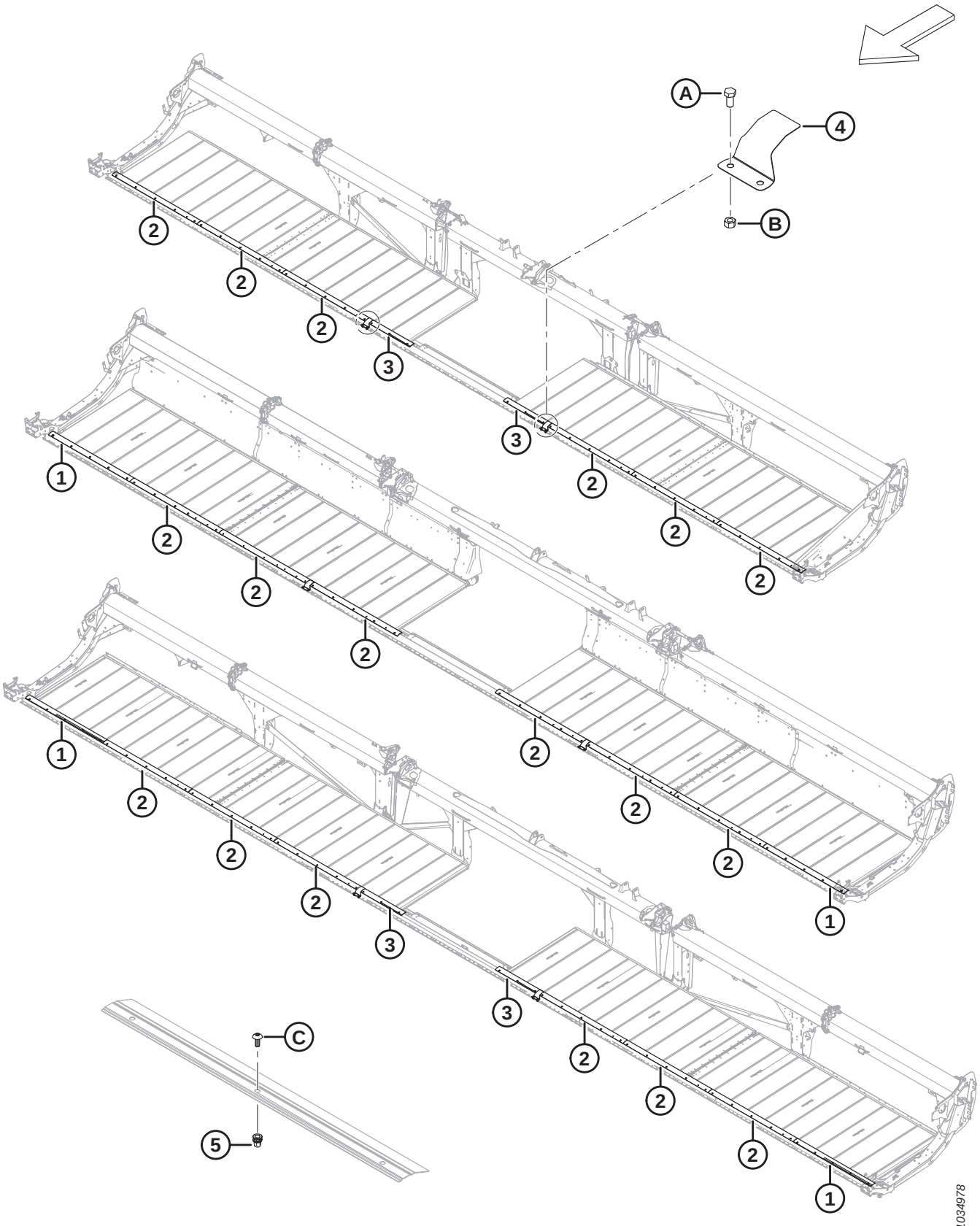

DRAPER – SEALS (FD241, FD245, AND FD250)

Ref	Part Number	Description	Qty	Serial Number
1	319231	PLATE – CUTTERBAR SEAL [47]		
2	319230	PLATE – CUTTERBAR SEAL [48]		
3	319229	PLATE – CUTTERBAR SEAL [49]		
4	319180	COVER – CUTTERBAR HINGE	2	
5	**320448**	**RIVNUT – M8 X 1.25 HEX** [50]		
A	50155	BOLT – HEX HD TFL M12 X 1.75 X 25-8.8-AA1J		
B	184694	NUT – HEX M12 X 1.75-8-AA1J		
C	320190	SCREW – TORX TRUSS HD M8 X 1.25 X 20-SPCL-8.8-ZINC		

47. Quantities: FD241 = 0, FD245 = 2, and FD250 = 2.
48. Quantities: FD241 = 6, FD245 = 6, and FD250 = 6.
49. Quantities: FD241 = 2, FD245 = 0, and FD250 = 2.
50. Quantities: FD241 = 36, FD245 = 40, and FD250 = 46.

23 Draper Deflectors – Narrow

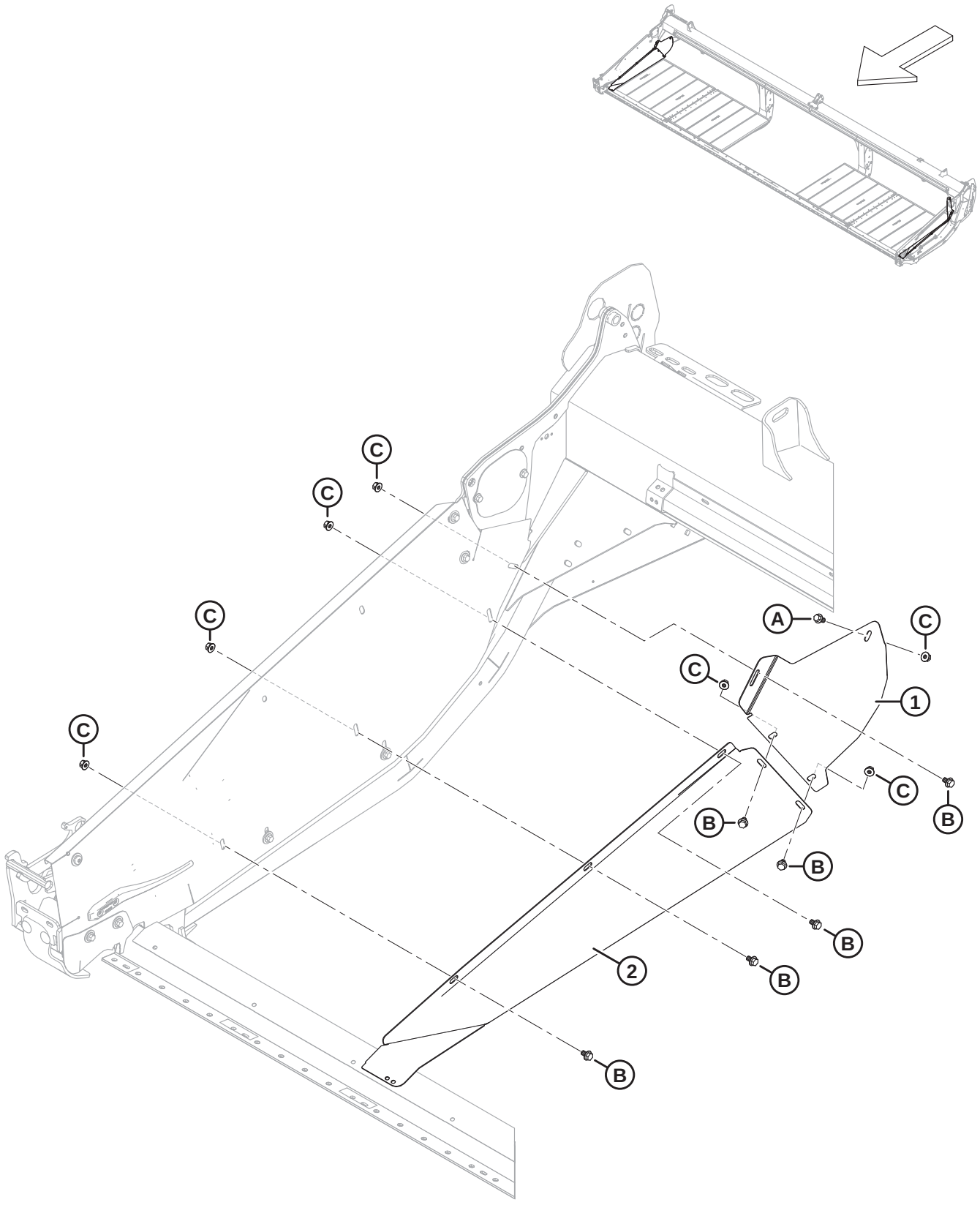

DRAPER DEFLECTORS – NARROW

Ref	Part Number	Description	Qty	Serial Number
1	289357	DEFLECTOR – RH NARROW REAR	1	
	289347	DEFLECTOR – LH NARROW REAR	1	
2	289356	DEFLECTOR – RH NARROW FRONT	1	
	289346	DEFLECTOR – LH NARROW FRONT	1	
A	152655	BOLT – HEX FLG HD M10 X 1.5 X 20-8.8-AA1J		
B	136151	BOLT – HEX FLG HD TFL M10 X 1.5 X 16-8.8-AA1J		
C	135799	NUT – HEX FLG CTR LOC M10 X 1.5-10		

24 Balance Linkage

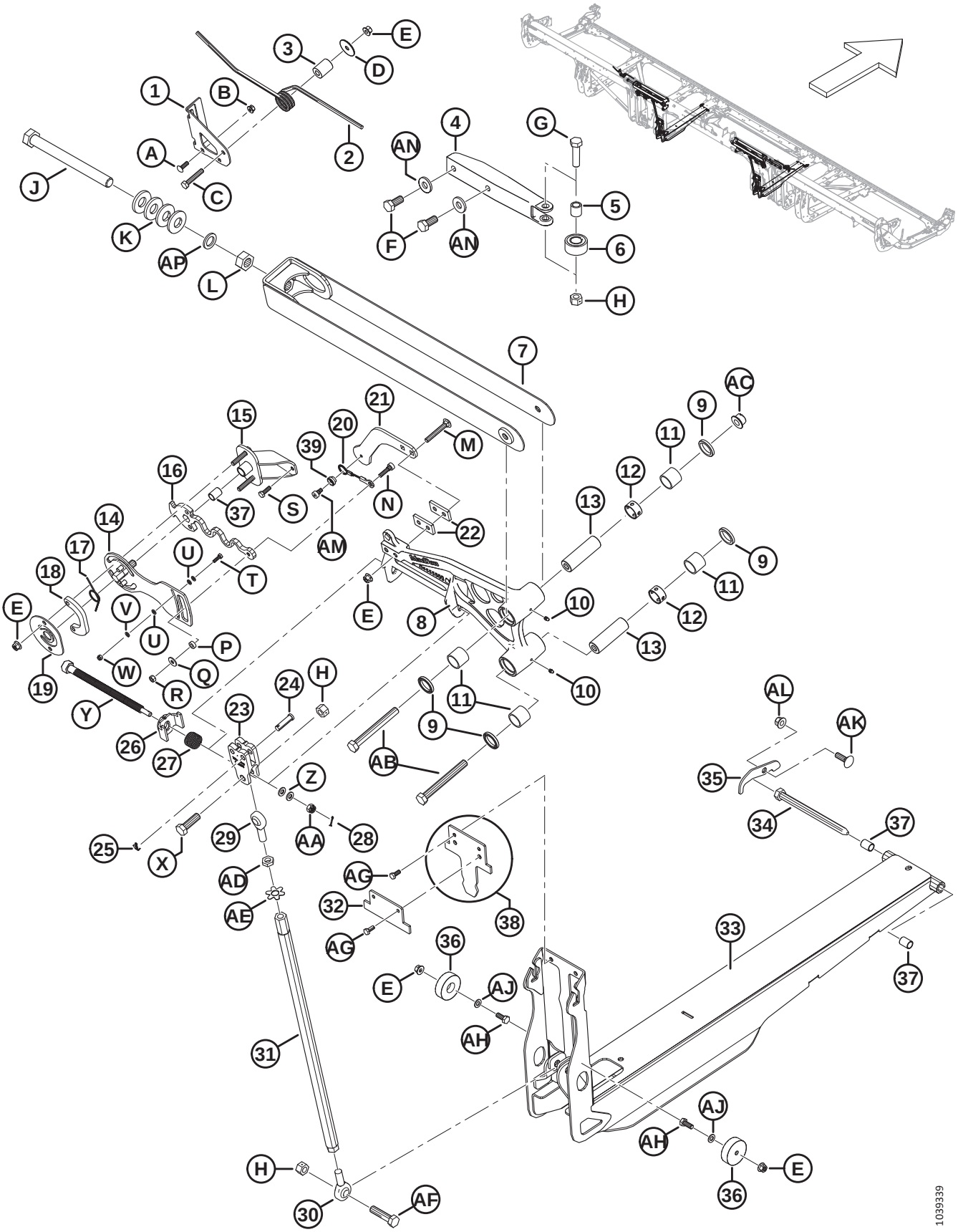

BALANCE LINKAGE

Ref	Part Number	Description	Qty	Serial Number
1	258740	BRACKET – BOLT ON WING LOCK	2	
2	258582	SPRING – WING LOCK	2	
3	258585	SPACER – WING LOCK	2	
4	258627	CASTING – WING STABILIZER MACH	2	
5	229340	BUSHING – WING STABILIZER	2	
6	258041	BEARING – CAM FOLLOWER	2	
7	319508	SUPPORT – TOP LINK WELDT (FD225–FD241) [51]	2	
	258346	SUPPORT – TOP LINK WELDT (FD230–FD241) [52]	2	
	319509	SUPPORT – WIDE TOP LINK WELDT (FD245–FD250) [53]	2	
	258399	SUPPORT – WIDE TOP LINK WELDT (FD245–FD250) [54]	2	
8	**335851**	**BELLCRANK – 25 FT SUB ASSY** [55]	**2**	
	258850	BELLCRANK – 30 FT SUB ASSY [55]	2	
	258849	BELLCRANK – 35 FT SUB ASSY [55]	2	
	258829	BELLCRANK – 40 FT DR SUB ASSY [55]	2	
	258831	BELLCRANK – LH 41 FT SUB ASSY [55]	1	
	258829	BELLCRANK – RH 41 FT SUB ASSY [55]	1	
	258953	BELLCRANK – 40 FT TR SUB ASSY [55]	2	
	258963	BELLCRANK – LH 45 FT SUB ASSY [55]	1	
	258969	BELLCRANK – RH 45 FT SUB ASSY [55]	1	
	258901	BELLCRANK – LH 50 FT SUB ASSY [55]	1	
	258905	BELLCRANK – RH 50 FT SUB ASSY [55]	1	
9	113222	SEAL	8	
10	18671	FITTING – LUBE 1/4 - 28 UNF	4	
11	100500	BEARING – NEEDLE	8	
12	258481	SPACER – BELL CRANK	4	
13	258298	PIN – BELL CRANK	4	
14	258815	PLATE WELDT – FLEX CHECKER	2	
15	258757	ASSY – FLEX CHECKER PIVOT [56]	2	
16	258817	SPRING – FLEX CHECKER	2	
17	258940	SPRING – FLEX ADJUSTER	2	
18	258823	PLATE – FLEX CHECKER SPACER	2	
19	258822	PLATE – FLEX CHECKER RETAINER	2	
20	258986	CABLE – FLEX CHECKER	2	
21	258622	BRACKET – FLEX MEASUREMENT	2	
22	340897	PLATE – FLEX CHECKER SPACER	4	
23	258384	CLEVIS – MACHINED FLEX ADJUSTER	2	
24	184977	PIN – CLEVIS 1/2 IN X 1 3/4 IN ZP	4	
25	18605	PIN – COTTER 1/8 DIA X 1 ZP	4	

51. For FD225 and model year 2022 FD230–FD241 headers only.
52. For model year 2021 FD230–FD241 headers only.
53. For model year 2022 FD245–FD250 headers only.
54. For model year 2021 FD245–FD250 headers only.
55. Includes four seals (MD #113222), two lube fittings (MD #18671), four needle bearings (MD #100500), and two bell crank spacers (MD #258481).
56. Includes bushing (MD #258391).

BALANCE LINKAGE

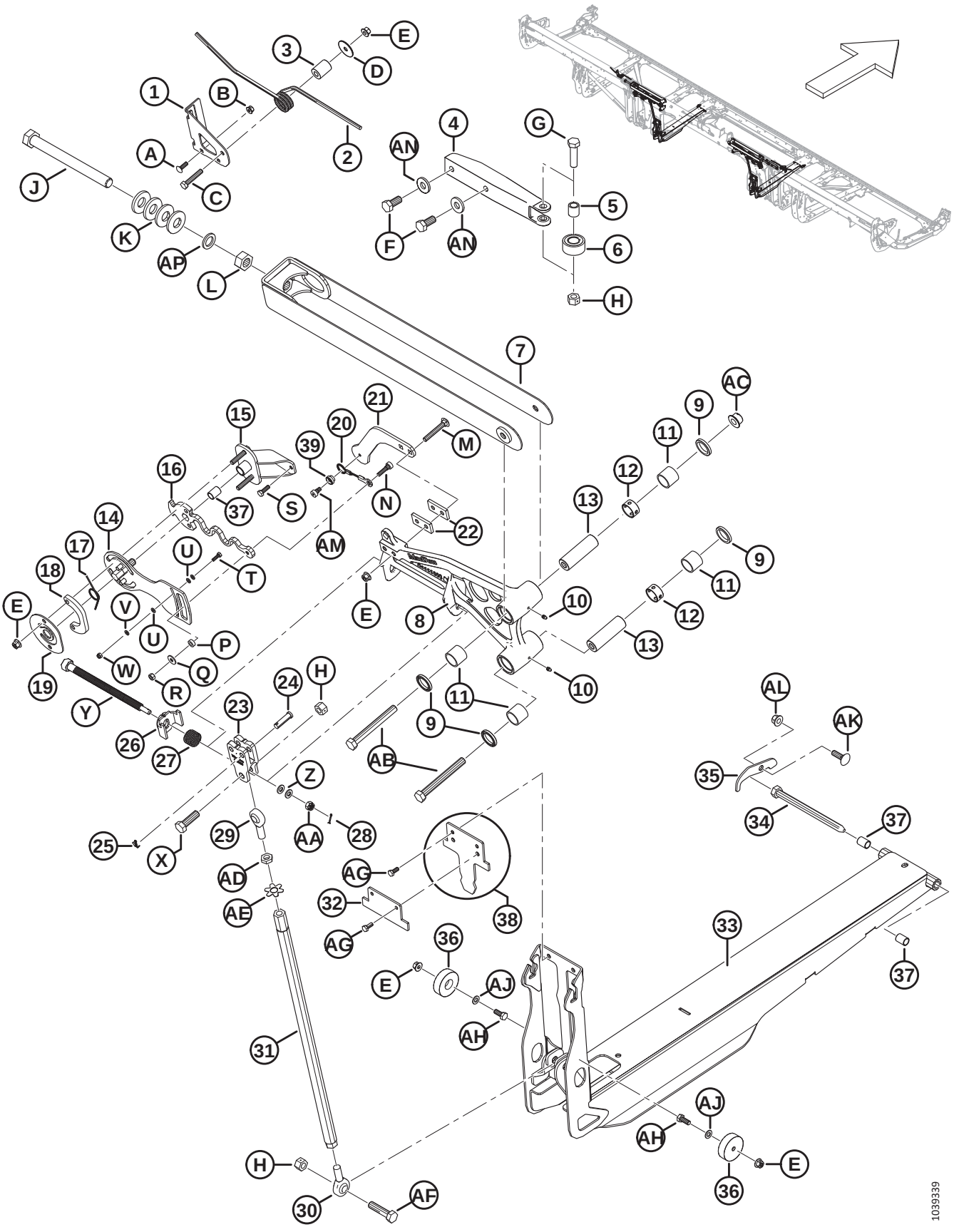

BALANCE LINKAGE

Ref	Part Number	Description	Qty	Serial Number
26	258761	WELDT – FLEX ADJUSTMENT LOCK	2	
27	258373	SPRING – BELL CRANK LOCK	2	
28	18604	PIN – COTTER 3/32 DIA X 3/4 ZP	2	
29	320109	ROD END – LINK, RH THREAD	2	
30	320110	ROD END – LINK, LH THREAD	2	
31	**319474**	**TUBE WELDT – COMPRESSION LINK**	**2**	
32	**340672**	**PLATE – 25 FT BALANCE CHAN STOP** [57]	**2**	
	258601	PLATE – FLEX FROWN LIMITER [58]	2	
33	319542	BALANCE CHANNEL – C/W BUSHINGS	2	
34	174418	PIN – HEX HD 5/8 X 8.5 LG-AA1J	2	
35	**330622**	**PLATE – FLEX PIN KEEPER**	**2**	
36	258791	GUIDE – PLASTIC	4	
37	258391	BUSHING	6	
38	258602	STOP – 30 FT FLEX LIMITER WELDT (FD230 ONLY) [59]	2	
39	258980	LOCK – FLEX CHECKING CABLE		
A	136824	BOLT – RHSSN M8 X 1.25 X 25-8.8-AA1J		
B	135337	NUT – HEX FLG CTR LK M8 X 1.25-8-AA1J		
C	152193	BOLT – HEX HD M10 X 1.5 X 55 X 8.8-AA1J		
D	258586	WASHER		
E	135799	NUT – HEX FLG CTR LOC M10 X 1.5-10		
F	136137	BOLT – HEX HD TFL M16 X 2 X 35-8.8-AA1J		
G	136141	BOLT – HEX HD M16 X 2 X 60-8.8-AA1J		
H	136476	NUT – HEX CTR LOC M16 X 2-8		
J	320108	BOLT – HEX HD FINE M24 X 1.5 X 250-SPCL-10.9-AA1J		
K	320236	WASHER – CONICAL SPRING, M24-FLAKE		
L	136512	NUT – HEX FINE M24 X 1.5-8-AA1J		
M	136495	BOLT – RHSN M10 X 1.5 X 70-8.8-AA1J		
N	320160	SCREW – HEX SOC HD SHLDR M10 X 7-M8 X 1.25 X 27-SPCL		
P	258846	WASHER		
Q	184709	WASHER – FLAT LARGE M8-200HV		
R	30856	NUT – HEX M8 X 1.25-9-AA1J		
S	136057	BOLT – HEX HD TFL M8 X 1.25 X 25-10.9-AA1J		
T	184646	BOLT – HEX HD TFL M6 X 1 X 20-8.8-AA1J		
U	184705	WASHER – FLAT M6-200HV-AA1J		
V	30631	WASHER – LOCK SPRING M6		
W	184685	NUT – HEX NYLOC M6 X 1-8-AA1J		
X	184681	BOLT – HEX HD M16 X 2 X 50-8.8-AA1J		
Y	320167	BOLT – HEX HD M16 X 4.0-SPCL-8.8-AA1J		
Z	30655	WASHER – HARD M10-340HV-AB0C		
AA	258758	NUT – HEX SLOTTED M10 X 1.5-8-AA1J		

57. FD225 headers only.
58. Plate attaches directly to balance channel (MD #258558) on double-reel FD240 headers. Plate does not exist for triple-reel FD240, FD245, and FD250 headers.
59. Stop is only present on FD230 headers.

BALANCE LINKAGE

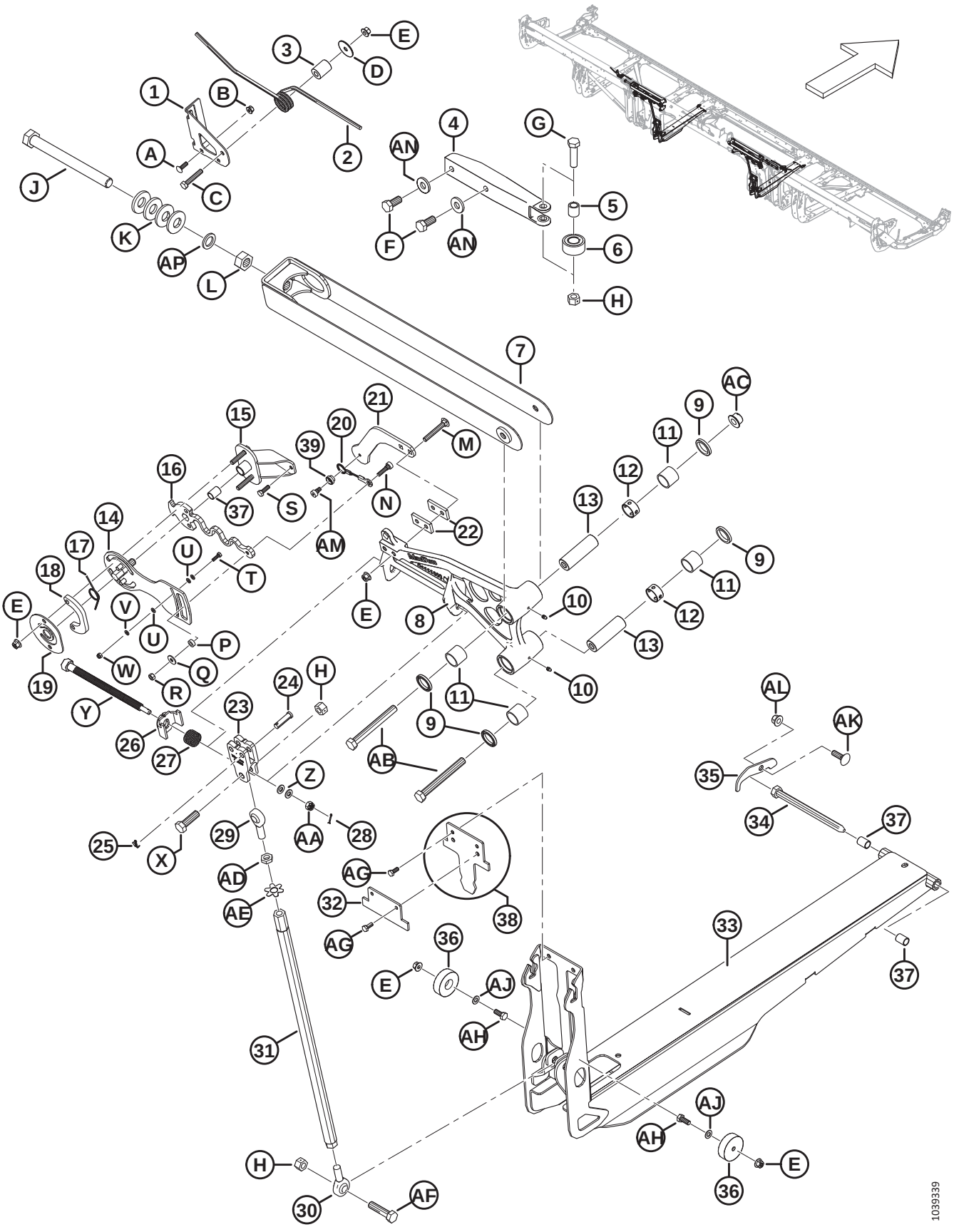

BALANCE LINKAGE

Ref	Part Number	Description	Qty	Serial Number
AB	184677	BOLT – HEX HD M16 X 2 X 140-8.8-AA1J		
AC	152520	NUT – HEX FLG TECH LK M16 X 2-10-AA1J		
AD	136473	NUT – HEX THIN M16 X 2-05-AA1J		
AE	229064	WASHER – M16 TAB		
AF	320199	BOLT – HEX HD M16 X 2 X 65-8.8-ZINC		
AG	30715	BOLT – HEX HD TFL M8 X 1.25 X 20-8.8-AA1J		
AH	30627	BOLT – HEX HD TFL M10 X 1.5 X 25-8.8-A3L		
AJ	184711	WASHER – FLAT REG M10-200HV-AA1J		
AK	135900	BOLT – RHSN TFL M12 X 1.75 X 40-8.8-ZINC		
AL	136431	NUT – HEX FLG CTR LOC M12 X 1.75-10		
AM	320161	SCREW – HEX SOC HD SHLDR M10 X 7-M8 X 1.25 X 9-SPCL		
AN	22072	WASHER – FLAT		
AP	320251	WASHER – FLAT, M24-ZINC		

25 Flex Linkage Shield – Backtube Hinge

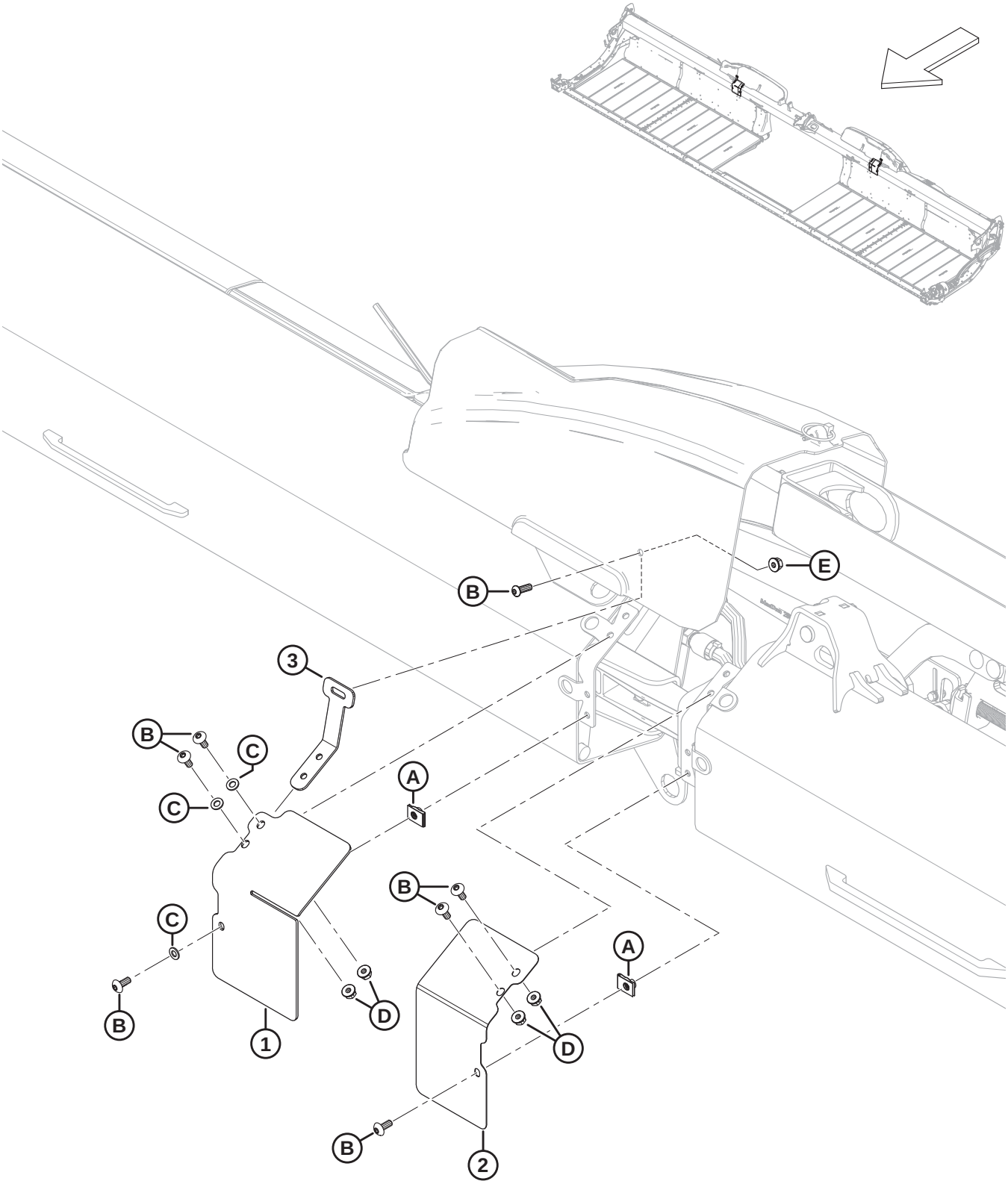

FLEX LINKAGE SHIELD – BACKTUBE HINGE

Ref	Part Number	Description	Qty	Serial Number
1	323086	SHIELD – FRONT TRANSITION, RH WING	1	
	323082	SHIELD – FRONT TRANSITION, LH WING	1	
2	323087	SHIELD – FRONT TRANSITION, RH WING	1	
	323083	SHIELD – FRONT TRANSITION, LH WING	1	
3	258837	BRACKET – FLEX WING SHIELD	2	
A	252839	NUT – CLIP ON M8		
B	320190	SCREW – TORX TRUSS HD M8 X 1.25 X 20-SPCL-8.8-ZINC		
C	184708	WASHER – FLAT M8-200HV-AA1J		
D	135337	NUT – HEX FLG CTR LK M8 X 1.25-8-AA1J		
E	135337	NUT – HEX FLG CTR LK M8 X 1.25-8-AA1J		

26 Flex Linkage Shield – Single Reel (FD225) and Double Reel (FD230, FD235, FD240, and FD241)

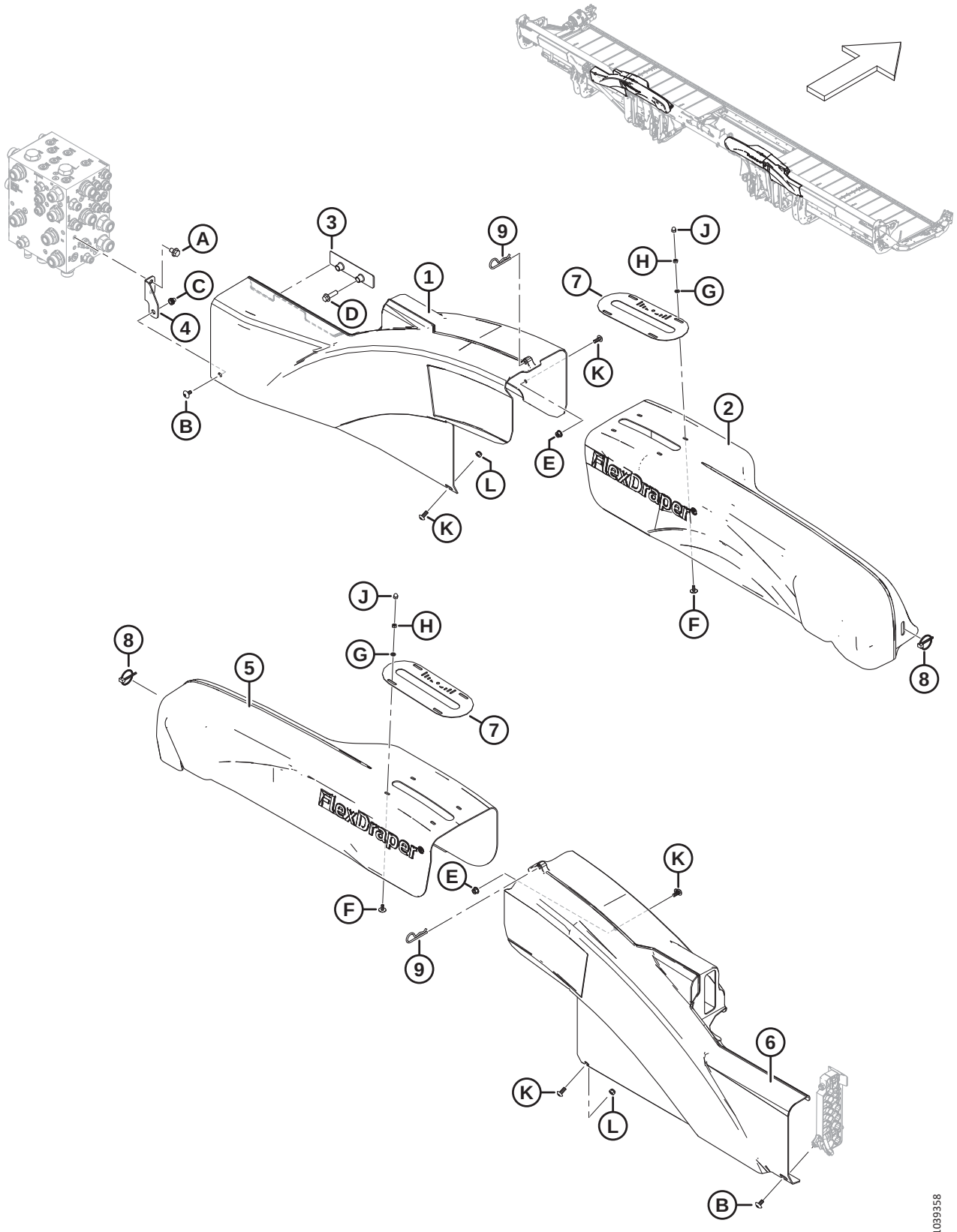

Ref	Part Number	Description	Qty	Serial Number
1	323032	SHIELD – LH WING	1	
2	258997	SHIELD – LH NF DR BELLCRANK	1	
3	283849	BRACKET – HYD COVER SUPPORT	1	
4	**323773**	**ASSY – RH SHIELD BRACKET** [60]	**1**	
5	258998	SHIELD – RH NF DR BELLCRANK	1	
6	323051	SHIELD – RH WING	1	
7	**360299**	**GAUGE – FLEX POSITION**	**2**	
8	102264	PIN – LYNCH 3/16 X 1 9/16 IN.	2	
9	13125	PIN – HAIR	2	
A	136151	BOLT – HEX FLG HD TFL M10 X 1.5 X 16-8.8-AA1J		
B	**320336**	**SCREW – TORX TRUSS HD M8 X 1.25 X 16-SPCL-8.8-AA1T**		
C	**320448**	**RIVNUT – M8 X 1.25 HEX**		
D	136211	BOLT – HEX FLG HD M10 X 1.5 X 35-8.8-AA1J		
E	135337	NUT – HEX FLG CTR LK M8 X 1.25-8-AA1J		
F	320148	SCREW – TRUSS SLT HD M6 X 1.0 X 16-SPCL-8.8-ZINC		
G	184705	WASHER – FLAT M6-200HV-AA1J		
H	184683	NUT – HEX ISO 4032 M6 X 1-8-ZINC		
J	320246	NUT – ACORN M6 X 1.0-8-ZINC		
K	320190	SCREW – TORX TRUSS HD M8 X 1.25 X 20-SPCL-8.8-ZINC		
L	184688	NUT – HEX NYLOC M8 X 1.25-8-AA1J		

60. The assembly includes RH shield mounting bracket (NSS) and rivnut (MD #320448). Model year 2022 and prior machines with superseded bracket (MD #283704) used M10 bolt (MD #152655) and nyloc nuts (MD #252807) to secure the LH wing shield to the shield bracket. For model year 2023 and later machines, or for machines that have been serviced with shield bracket assembly (MD #323773), order M8 screw (MD #320336).

27 Flex Linkage Shield – Triple Reel (FD240)

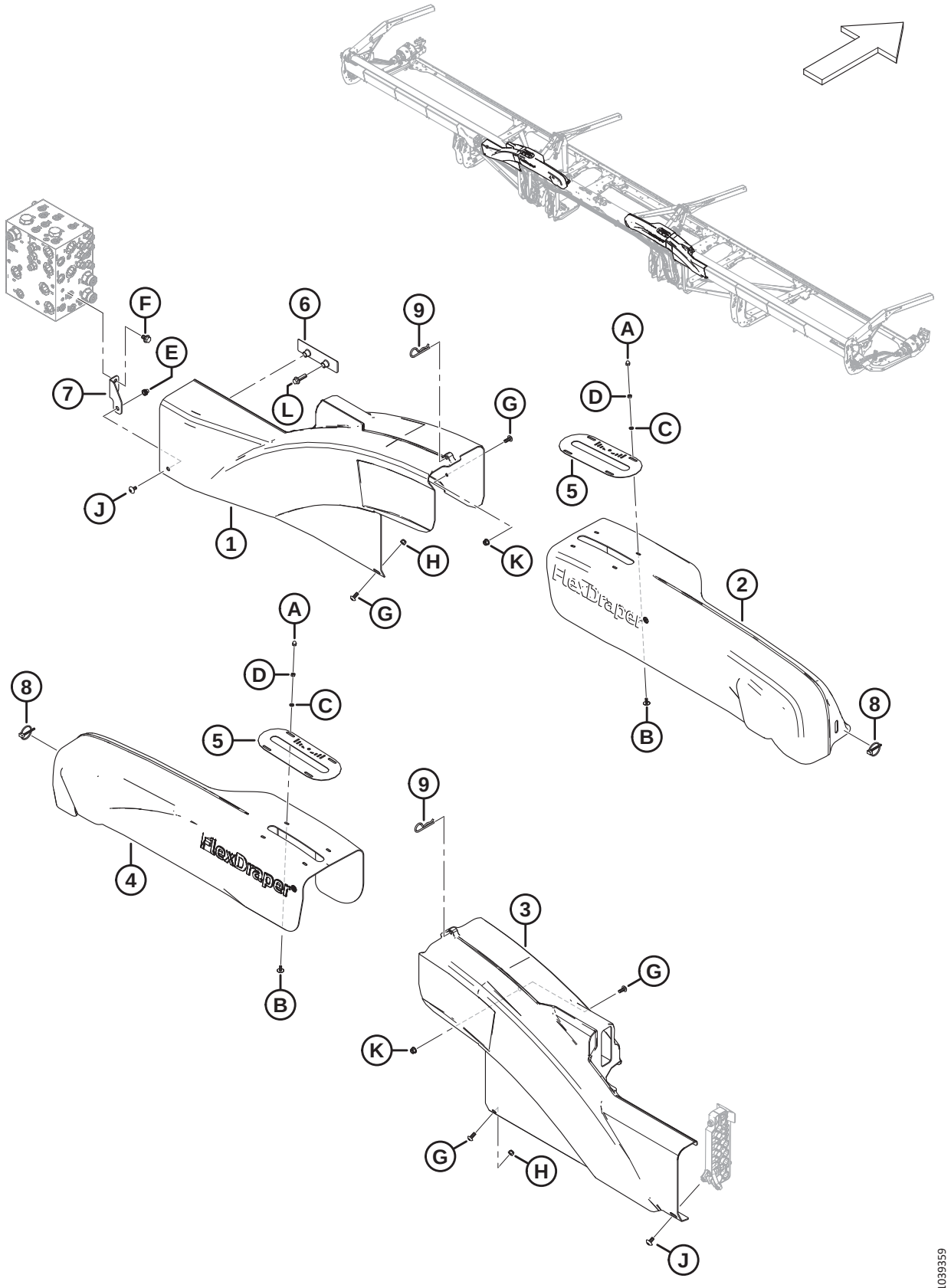

FLEX LINKAGE SHIELD – TRIPLE REEL (FD240)

Ref	Part Number	Description	Qty	Serial Number
1	323032	SHIELD – LH WING	1	
2	323157	SHIELD – LH NF TR BELLCRANK	1	
3	323051	SHIELD – RH WING	1	
4	323158	SHIELD – RH NF TR BELLCRANK	1	
5	**360299**	**GAUGE – FLEX POSITION**	**2**	
6	283849	BRACKET – HYD COVER SUPPORT	1	
7	**323773**	**ASSY – RH SHIELD BRACKET** [61]	**1**	
8	102264	PIN – LYNCH 3/16 X 1 9/16 IN.	2	
9	13125	PIN – HAIR	2	
A	320246	NUT – ACORN M6 X 1.0-8-ZINC		
B	320148	SCREW – TRUSS SLT HD M6 X 1.0 X 16-SPCL-8.8-ZINC		
C	184705	WASHER – FLAT M6-200HV-AA1J		
D	184683	NUT – HEX ISO 4032 M6 X 1-8-ZINC		
E	**320448**	**RIVNUT – M8 X 1.25 HEX**		
F	136151	BOLT – HEX FLG HD TFL M10 X 1.5 X 16-8.8-AA1J		
G	320190	SCREW – TORX TRUSS HD M8 X 1.25 X 20-SPCL-8.8-ZINC		
H	184688	NUT – HEX NYLOC M8 X 1.25-8-AA1J		
J	**320336**	**SCREW – TORX TRUSS HD M8 X 1.25 X 16-SPCL-8.8-AA1T**		
K	135337	NUT – HEX FLG CTR LK M8 X 1.25-8-AA1J		
L	136211	BOLT – HEX FLG HD M10 X 1.5 X 35-8.8-AA1J		

61. The assembly includes RH shield mounting bracket (NSS) and rivnut (MD #320448). Model year 2022 and prior machines with superseded bracket (MD #283704) used M10 bolt (MD #152655) and nyloc nuts (MD #252807) to secure the LH wing shield to the shield bracket. For model year 2023 and later machines, or for machines that have been serviced with shield bracket assembly (MD #323773), order M8 screw (MD #320336).

28 Flex Linkage Shield – Triple Reel (FD245 and FD250)

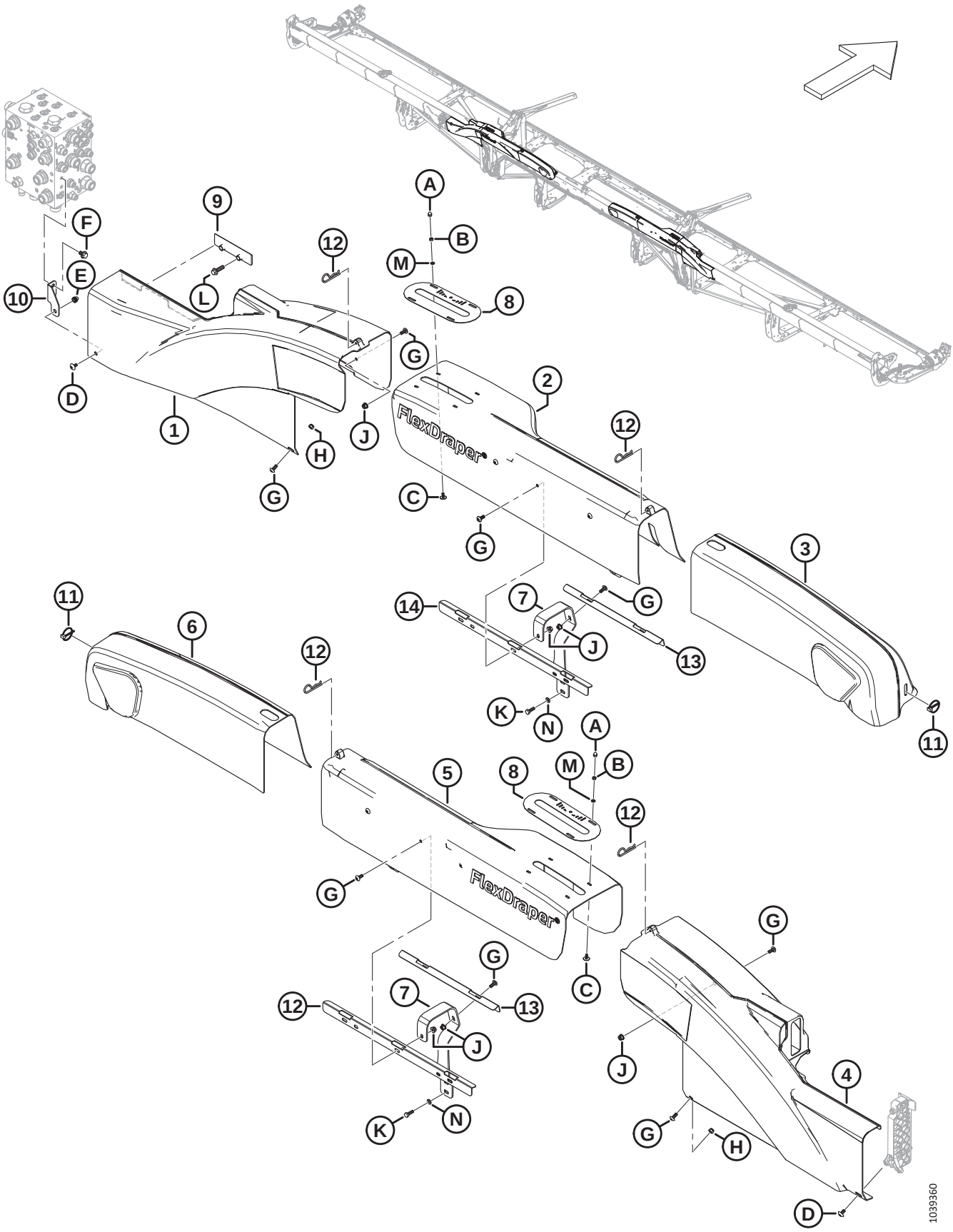

FLEX LINKAGE SHIELD – TRIPLE REEL (FD245 AND FD250)

Ref	Part Number	Description	Qty	Serial Number
1	323032	SHIELD – LH WING	1	
2	319563	SHIELD – WF TR LH FLEX LINKAGE	1	
3	258893	SHIELD – TR LH FLEX LINKAGE	1	
4	323051	SHIELD – RH WING	1	
5	319564	SHIELD – WF TR RH FLEX LINKAGE	1	
6	258932	SHIELD – TR RH FLEX LINKAGE	1	
7	319550	BRACKET – LINKAGE SHIELD	4	
8	**360299**	**GAUGE – FLEX POSITION**	**2**	
9	283849	BRACKET – HYD COVER SUPPORT	1	
10	**323773**	**ASSY – RH SHIELD BRACKET** [62]	**1**	
11	102264	PIN – LYNCH 3/16 X 1 9/16 IN.	2	
12	13125	PIN – HAIR	4	
13	319548	BRACE – TR SHIELDS	2	
14	319549	BRACE – TR SHIELDS FRONT	2	
A	320246	NUT – ACORN M6 X 1.0-8-ZINC		
B	184683	NUT – HEX ISO 4032 M6 X 1-8-AA1J		
C	320148	SCREW – TRUSS SLT HD M6 X 1.0 X 16-SPCL-8.8-ZINC		
D	**320336**	**SCREW – TORX TRUSS HD M8 X 1.25 X 16-SPCL-8.8-AA1T**		
E	**320448**	**RIVNUT – M8 X 1.25 HEX**		
F	136151	BOLT – HEX FLG HD TFL M10 X 1.5 X 16-8.8-AA1J		
G	320190	SCREW – TORX TRUSS HD M8 X 1.25 X 20-SPCL-8.8-ZINC		
H	184688	NUT – HEX NYLOC M8 X 1.25-8-AA1J		
J	135337	NUT – HEX FLG CTR LK M8 X 1.25-8-AA1J		
K	136057	BOLT – HEX HD TFL M8 X 1.25 X 25-10.9-AA1J		
L	136211	BOLT – HEX FLG HD M10 X 1.5 X 35-8.8-AA1J		
M	184705	WASHER – FLAT M6-200HV-AA1J		
N	184708	WASHER – FLAT M8-200HV-AA1J		

62. The assembly includes RH shield mounting bracket (NSS) and rivnut (MD #320448). Model year 2022 and prior machines with superseded bracket (MD #283704) used M10 bolt (MD #152655) and nyloc nuts (MD #252807) to secure the LH wing shield to the shield bracket. For model year 2023 and later machines, or for machines that have been serviced with shield bracket assembly (MD #323773), order M8 screw (MD #320336).

29 Guards, Hold-Downs, and Cutterbar Shoes – Single Knife, Pointed (FD225, FD230, FD235, and FD240)

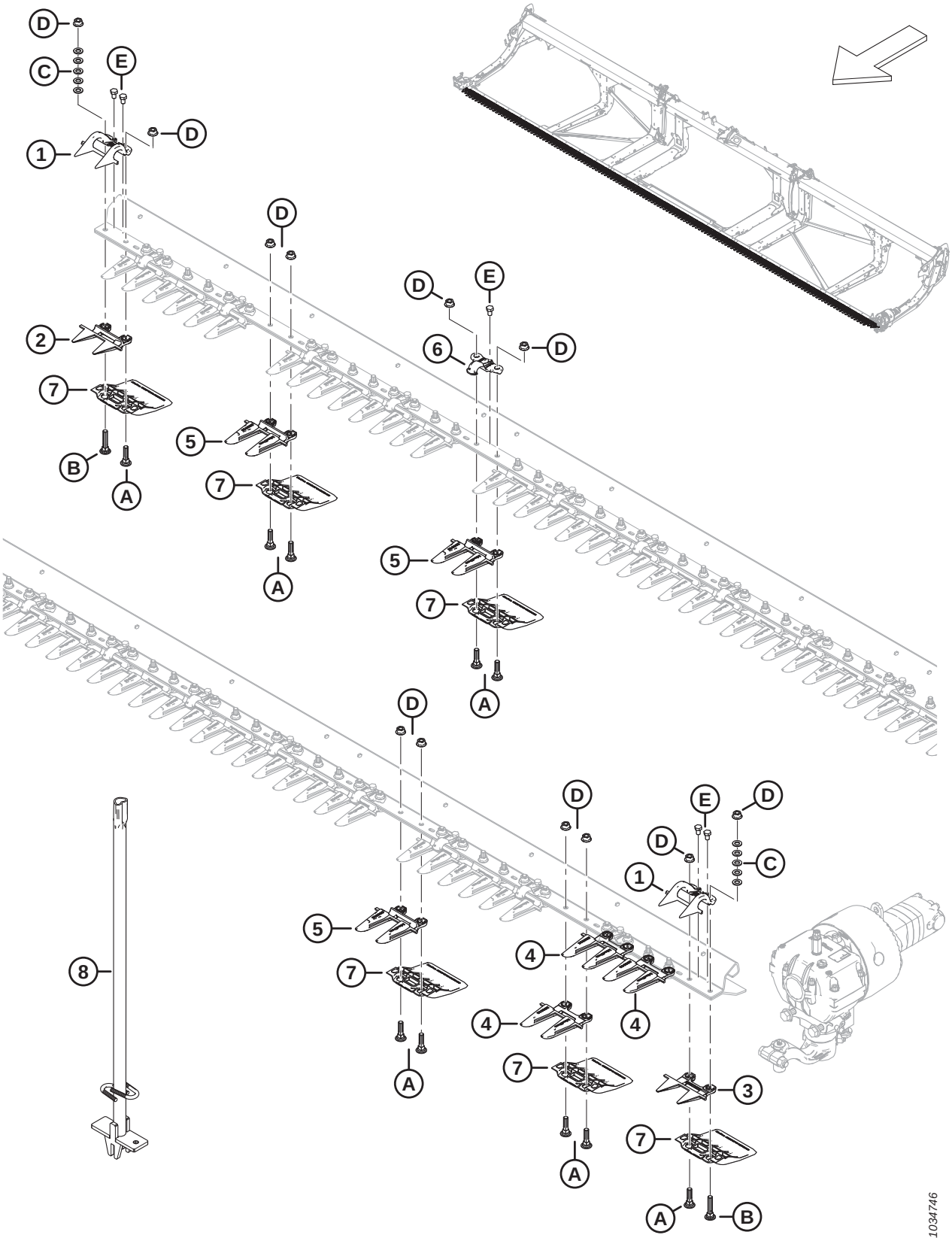

Ref	Part Number	Description	Qty	Serial Number
	286668	**KIT – POINTED GUARDS 25 FT SK** [63]	**A/R**	
	286669	KIT – POINTED GUARDS 30 FT SK [64]	A/R	
	286670	KIT – POINTED GUARDS 35 FT SK [65]	A/R	
	286671	KIT – POINTED GUARDS 40 FT SK [66]	A/R	
1	286331	HOLD-DOWN – PLUG FREE END	2	
2	286318	KNIFE GUARD – PLUG FREE SHORT	1	
3	286319	KNIFE GUARD – PLUG FREE END	1	
4	286316	KNIFE GUARD – POINTED END	3	
5	286315	KNIFE GUARD – POINTED [67]		
6	286329	HOLD-DOWN – POINTED [68]		
7	286257	SHOE – WEARPLATE CUTTERBAR [69]		
8	286705	TOOL – WELDT	A/R	
A	226295	BOLT – RHSN SPCL M12 X 47-8.8		
B	226280	BOLT – RHSN SPCL M12 X 60-8.8		
C	184714	WASHER – FLAT REG M12-300HV		
D	136036	NUT – HEX SM FLG M12 X 1.75-8-AA1J		
E	136005	BOLT – HEX HD FINE TFL M10 X 1.25 X 16-8.8-AA1J		

63. The kit includes 45 pointed guards (MD #286315), 3 pointed end guards (MD #286316), 1 PlugFree guard (MD #286318), and 1 PlugFree end guard (MD #286319).
64. The kit includes 55 pointed guards (MD #286315), 3 pointed end guards (MD #286316), 1 PlugFree guard (MD #286318), and 1 PlugFree end guard (MD #286319).
65. The kit includes 65 pointed guards (MD #286315), 3 pointed end guards (MD #286316), 1 PlugFree guard (MD #286318), and 1 PlugFree end guard (MD #286319).
66. The kit includes 75 pointed guards (MD #286315), 3 pointed end guards (MD #286316), 1 PlugFree guard (MD #286318), and 1 PlugFree end guard (MD #286319).
67. Quantities: FD225 = 45, FD230 = 55, FD235 = 65, and FD240 = 75.
68. Quantities: FD225 = 24, FD230 = 29, FD235 = 34, and FD240 = 39.
69. Quantities: FD225 = 50, FD230 = 60, FD235 = 70, and FD240 = 80.

30 Guards, Hold-Downs, and Cutterbar Shoes – Double Knife, Pointed (FD235, FD240, FD241, FD245, and FD250)

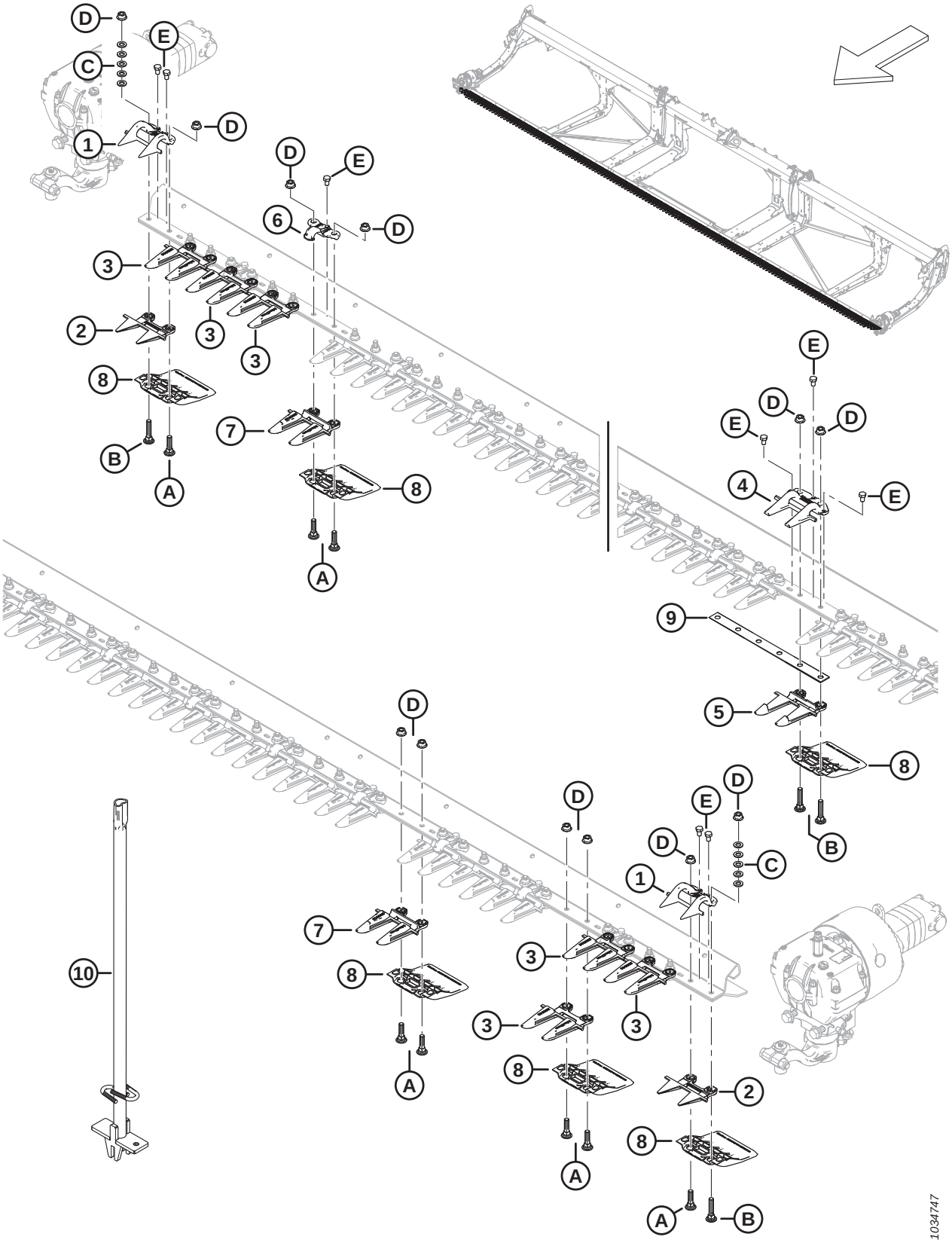

GUARDS, HOLD-DOWNS, AND CUTTERBAR SHOES – DOUBLE KNIFE, POINTED (FD235, FD240, FD241, FD245, AND FD250)

Ref	Part Number	Description	Qty	Serial Number
	286663	KIT – POINTED GUARDS 35 FT DK [70]	A/R	
	286664	KIT – POINTED GUARDS 40 FT DK [71]	A/R	
	286665	KIT – POINTED GUARDS 41 FT DK [72]	A/R	
	286666	KIT – POINTED GUARDS 45 FT DK [73]	A/R	
	286667	KIT – POINTED GUARDS 50 FT DK [74]	A/R	
1	286331	HOLD-DOWN – PLUG FREE END	2	
2	286319	KNIFE GUARD – PLUG FREE END	2	
3	286316	KNIFE GUARD – POINTED END	6	
4	286332	HOLD-DOWN – POINTED CENTER	1	
5	286317	KNIFE GUARD – POINTED CENTER	1	
6	286329	HOLD-DOWN – POINTED [75]		
7	286315	KNIFE GUARD – POINTED [76]		
8	286257	SHOE – WEARPLATE CUTTERBAR [77]		
9	226861	SHIM – DK OVERLAP	1	
10	286705	TOOL – WELDT	A/R	
A	226295	BOLT – RHSN SPCL M12 X 47-8.8		
B	226280	BOLT – RHSN SPCL M12 X 60-8.8		
C	184714	WASHER – FLAT REG M12-300HV		
D	136036	NUT – HEX SM FLG M12 X 1.75-8-AA1J		
E	136005	BOLT – HEX HD FINE TFL M10 X 1.25 X 16-8.8-AA1J		

70. The kit includes 61 pointed guards (MD #286315), 6 pointed end guards (MD #286316), 1 pointed center guard (MD #286317), 2 PlugFree end guards (MD #286319), and 1 pointed center hold-down (MD #286332).
71. The kit includes 71 pointed guards (MD #286315), 6 pointed end guards (MD #286316), 1 pointed center guard (MD #286317), 2 PlugFree end guards (MD #286319), and 1 pointed center hold-down (MD #286332).
72. The kit includes 73 pointed guards (MD #286315), 6 pointed end guards (MD #286316), 1 pointed center guard (MD #286317), 2 PlugFree end guards (MD #286319), and 1 pointed center hold-down (MD #286332).
73. The kit includes 81 pointed guards (MD #286315), 6 pointed end guards (MD #286316), 1 pointed center guard (MD #286317), 2 PlugFree end guards (MD #286319), and 1 pointed center hold-down (MD #286332).
74. The kit includes 91 pointed guards (MD #286315), 6 pointed end guards (MD #286316), 1 pointed center guard (MD #286317), 2 PlugFree end guards (MD #286319), and 1 pointed center hold-down (MD #286332).
75. Quantities: FD235 = 34, FD240 = 38, FD241 = 39, FD245 = 44, and FD250 = 48.
76. Quantities: FD235 = 61, FD240 = 71, FD241 = 73, FD245 = 81, and FD250 = 91.
77. Quantities: FD235 = 70, FD240 = 80, FD241 = 82, FD245 = 90, and FD250 = 100.

31 Guards, Hold-Downs, and Cutterbar Shoes – Single Knife, PlugFree™ (FD225, FD230, FD235, and FD240)

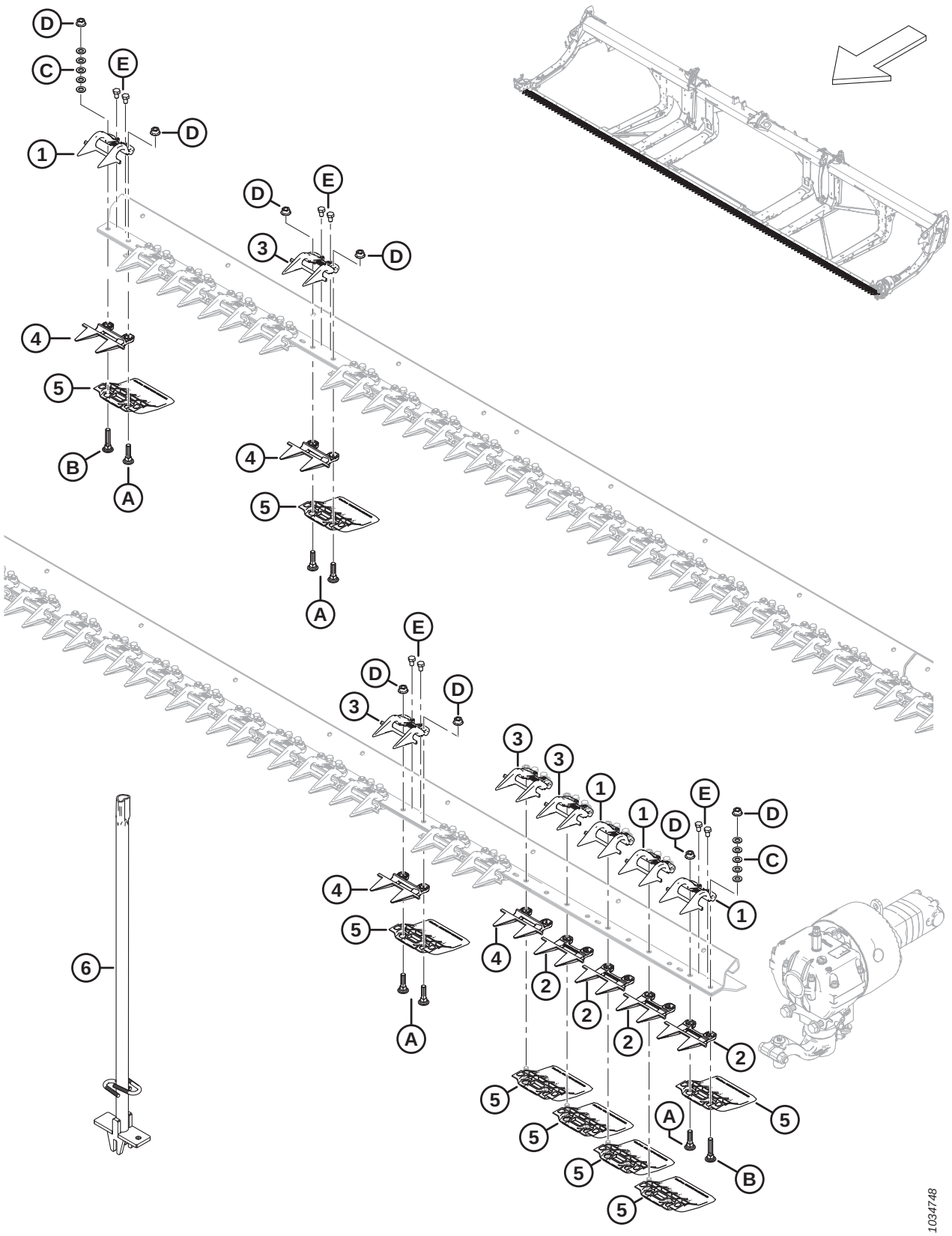

Ref	Part Number	Description	Qty	Serial Number
	286679	**KIT – PLUGFREE GUARDS 25 FT SK** [78]	**A/R**	
	286680	KIT – PLUGFREE GUARDS 30 FT SK [79]	A/R	
	286681	KIT – PLUGFREE GUARDS 35 FT SK [80]	A/R	
	286682	KIT – PLUGFREE GUARDS 40 FT SK [81]	A/R	
1	286331	HOLD-DOWN – PLUG FREE END	4	
2	286319	KNIFE GUARD – PLUG FREE END	4	
3	286330	HOLD-DOWN – PLUG FREE [82]		
4	286318	KNIFE GUARD – PLUG FREE SHORT [82]		
5	286257	SHOE – WEARPLATE CUTTERBAR [83]		
6	286705	TOOL – WELDT	A/R	
A	226295	BOLT – RHSN SPCL M12 X 47-8.8		
B	226280	BOLT – RHSN SPCL M12 X 60-8.8		
C	184714	WASHER – FLAT REG M12-300HV		
D	136036	NUT – HEX SM FLG M12 X 1.75-8-AA1J		
E	136005	BOLT – HEX HD FINE TFL M10 X 1.25 X 16-8.8-AA1J		

78. The kit includes 46 PlugFree guards (MD #286318) and 4 end guards (MD #286319).
79. The kit includes 56 PlugFree guards (MD #286318) and 4 end guards (MD #286319).
80. The kit includes 66 PlugFree guards (MD #286318) and 4 end guards (MD #286319).
81. The kit includes 76 PlugFree guards (MD #286318) and 4 end guards (MD #286319).
82. Quantities: FD225 = 46, FD230 = 56, FD235 = 66, and FD240 = 76.
83. Quantities: FD225 = 50, FD230 = 60, FD235 = 70, and FD240 = 80.

32 Guards, Hold-Downs, and Cutterbar Shoes – Double Knife, PlugFree™ (FD240, FD241, FD245, and FD250)

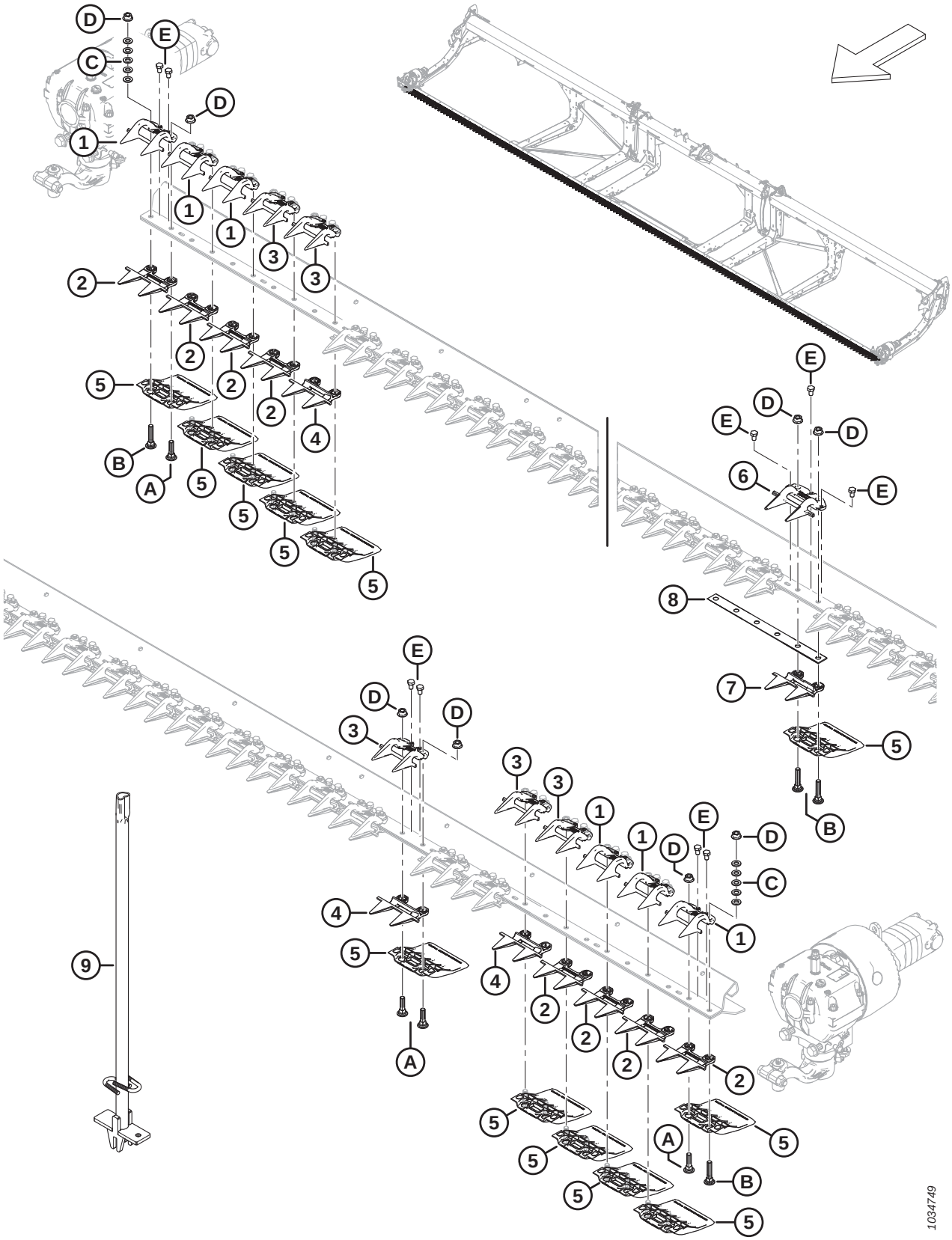

Ref	Part Number	Description	Qty	Serial Number
	286673	KIT – PLUGFREE GUARDS 30 FT DK [84]	A/R	
	286674	KIT – PLUGFREE GUARDS 35 FT DK [85]	A/R	
	286675	KIT – PLUGFREE GUARDS 40 FT DK [86]	A/R	
	286676	KIT – PLUGFREE GUARDS 41 FT DK [87]	A/R	
	286677	KIT – PLUGFREE GUARDS 45 FT DK [88]	A/R	
	286678	KIT – PLUGFREE GUARDS 50 FT DK [89]	A/R	
1	286331	HOLD-DOWN – PLUG FREE END	6	
2	286319	KNIFE GUARD – PLUG FREE END	8	
3	286330	HOLD-DOWN – PLUG FREE [90]		
4	286318	KNIFE GUARD – PLUG FREE SHORT [91]		
5	286257	SHOE – WEARPLATE CUTTERBAR [92]		
6	286333	HOLD-DOWN – PLUG FREE CENTER	1	
7	286320	KNIFE GUARD – PLUG FREE CENTER	1	
8	226861	SHIM – DK OVERLAP	1	
9	286705	TOOL – WELDT	A/R	
A	226295	BOLT – RHSN SPCL M12 X 47-8.8		
B	226280	BOLT – RHSN SPCL M12 X 60-8.8		
C	184714	WASHER – FLAT REG M12-300HV		
D	136036	NUT – HEX SM FLG M12 X 1.75-8-AA1J		
E	136005	BOLT – HEX HD FINE TFL M10 X 1.25 X 16-8.8-AA1J		

84. The kit includes 51 PlugFree guards (MD #286318), 8 end guards (MD #286319), 1 center guard (MD #286320), and 1 center hold-down (MD #286333).
85. The kit includes 61 PlugFree guards (MD #286318), 8 end guards (MD #286319), 1 center guard (MD #286320), and 1 center hold-down (MD #286333).
86. The kit includes 71 PlugFree guards (MD #286318), 8 end guards (MD #286319), 1 center guard (MD #286320), and 1 center hold-down (MD #286333).
87. The kit includes 73 PlugFree guards (MD #286318), 8 end guards (MD #286319), 1 center guard (MD #286320), and 1 center hold-down (MD #286333).
88. The kit includes 81 PlugFree guards (MD #286318), 8 end guards (MD #286319), 1 center guard (MD #286320), and 1 center hold-down (MD #286333).
89. The kit includes 91 PlugFree guards (MD #286318), 8 end guards (MD #286319), 1 center guard (MD #286320), and 1 center hold-down (MD #286333).
90. Quantities: FD240 = 73, FD241 = 75, FD245 = 83, and FD250 = 93.
91. Quantities: FD240 = 71, FD241 = 73, FD245 = 81, and FD250 = 91.
92. Quantities: FD240 = 80, FD241 = 82, FD245 = 90, and FD250 = 100.

33 Knives – Single-Knife Headers, Coarse-Tooth Sections (FD225)

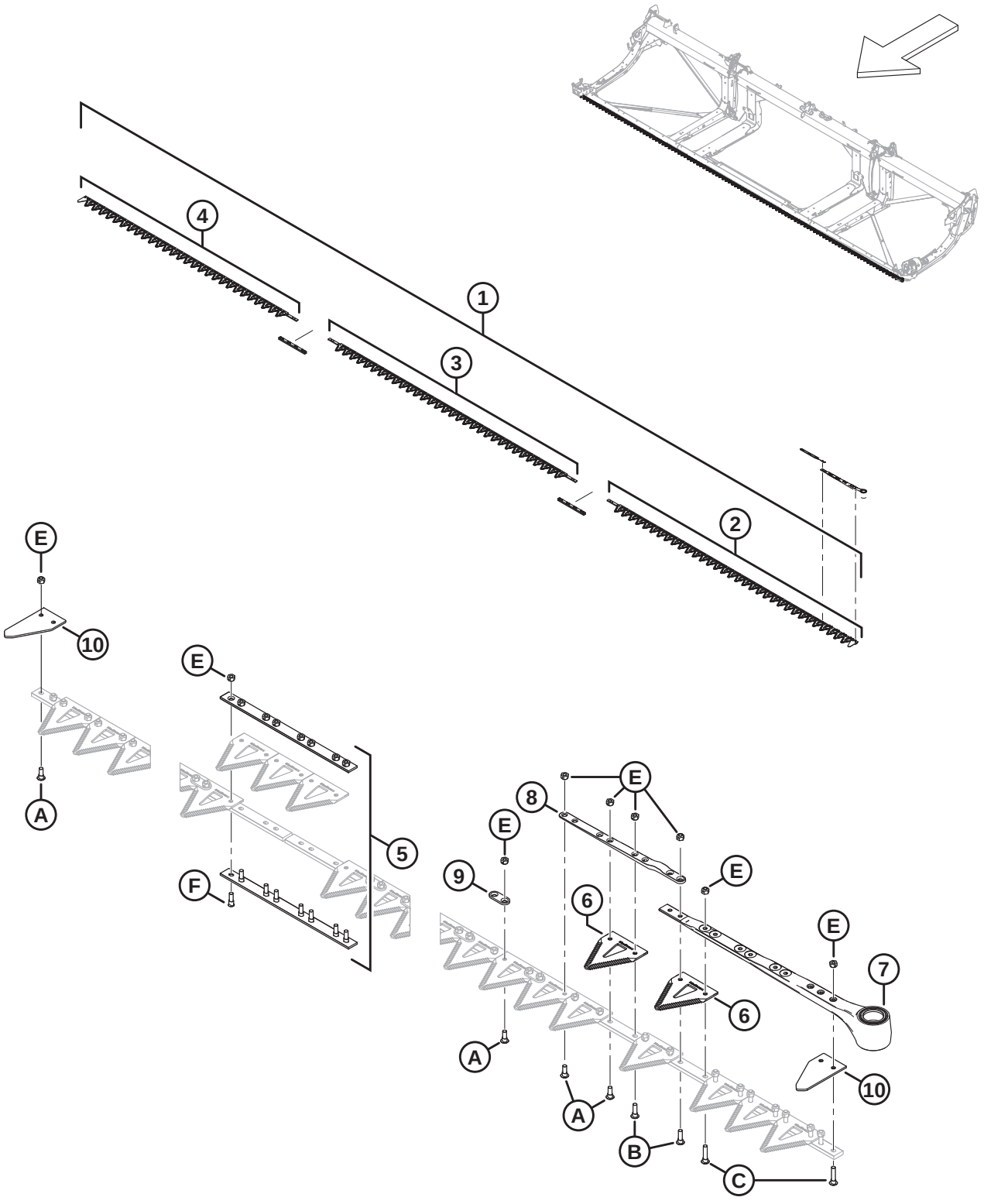

1039416

Ref	Part Number	Description	Qty	Serial Number
1	286597	KIT – KNIFE 25 FT SK COARSE [93]	1	
2	286562	KNIFE – HEAD SEGMENT LH COARSE 2676 MM	1	
3	286564	KNIFE – CENTER SEGMENT COARSE 2663 MM	1	
4	286566	KNIFE – TAIL SEGMENT SK COARSE 2295 MM	1	
5	286493	KIT – KNIFE SPLICE	2	
6	286461	SECTION – CLEARCUT COARSE (25 PACK)		
	286462	SECTION – CLEARCUT FINE (25 PACK)	OPT	
	286627	SECTION – CLEARCUT ULTRA COARSE (25 PACK)	OPT	
7	226941	KNIFE HEAD ASSEMBLY	1	
	115670	O-RING – 1.78 X 34.64	1	
	113937	DISC	1	
	113222	SEAL KIT	1	
	100500	BEARING – NEEDLE	1	
8	286440	BAR – FORGED	1	
9	286481	BAR – REINFORCEMENT (25 PACK)		
10	226983	SECTION – END	2	
A	286475	SCREW – M6 X 18 MM, C/W NUT (50 PACK)		
B	286476	SCREW – M6 X 22 MM, C/W NUT (25 PACK)		
C	286477	SCREW – M6 X 29 MM, C/W NUT (25 PACK)		
D	286478	SCREW – CSK M6 X 14 MM, C/W NUT (25 PACK)		
E	286479	NUT – CTR LOC CSK M6 X 1 (50 PACK)		
F	286621	SCREW – CSK M6 X 22 MM, C/W NUT (25 PACK)		

93. The kit includes one ClearCut coarse section, 25 pack (MD #286461), two knife splice kits (MD #286493), one LH coarse knife head segment (MD #286562), one center coarse knife segment (MD #286564), and one tail coarse knife segment (MD #286566).

34 Knives – Single-Knife Headers, Coarse-Tooth Sections (FD230, FD235, and FD240)

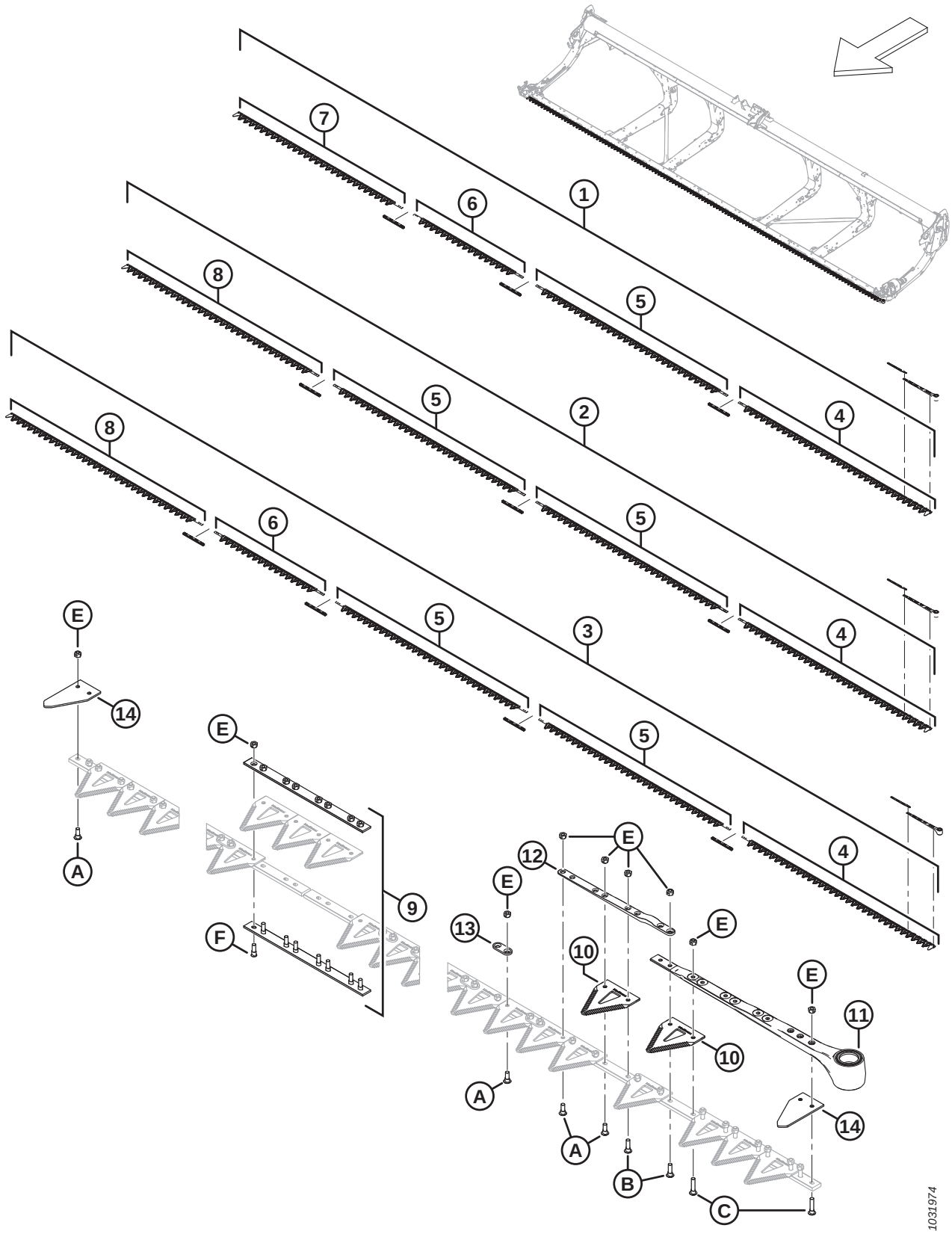

Ref	Part Number	Description	Qty	Serial Number
1	286598	KIT – KNIFE 30 FT SK COARSE [94]	1	
2	286599	KIT – KNIFE 35 FT SK COARSE [95]	1	
3	286600	KIT – KNIFE 40 FT SK COARSE [96]	1	
4	286562	KNIFE – HEAD SEGMENT LH COARSE 2676 MM	1	
5	286564	KNIFE – CENTER SEGMENT COARSE 2663 MM [97]		
6	286565	KNIFE – CENTER SEGMENT COARSE 1520 MM [98]		
7	286566	KNIFE – TAIL SEGMENT SK COARSE 2295 MM [99]		
8	286567	KNIFE – TAIL SEGMENT SK COARSE 2676 MM [100]		
9	286493	KIT – KNIFE SPLICE [101]		
10	286461	SECTION – CLEARCUT COARSE (25 PACK)		
	286462	SECTION – CLEARCUT FINE (25 PACK)	OPT	
	286627	SECTION – CLEARCUT ULTRA COARSE (25 PACK)	OPT	
11	226941	KNIFE HEAD ASSEMBLY	1	
	115670	O-RING – 1.78 X 34.64	1	
	113937	DISC	1	
	113222	SEAL KIT	1	
	100500	BEARING – NEEDLE	1	
12	286440	BAR – FORGED	1	
13	286481	BAR – REINFORCEMENT (25 PACK)		
14	226983	SECTION – END	2	
A	286475	SCREW – M6 X 18 MM, C/W NUT (50 PACK)		
B	286476	SCREW – M6 X 22 MM, C/W NUT (25 PACK)		
C	286477	SCREW – M6 X 29 MM, C/W NUT (25 PACK)		
D	286478	SCREW – CSK M6 X 14 MM, C/W NUT (25 PACK)		
E	286479	NUT – CTR LOC CSK M6 X 1 (50 PACK)		
F	286621	SCREW – CSK M6 X 22 MM, C/W NUT (25 PACK)		

94. The kit includes one ClearCut coarse section, 25 pack (MD #286461), three knife splice kits (MD #286493), one LH coarse knife head segment (MD #286562), one center coarse knife segment (MD #286564), one center coarse knife segment (MD #286565), and one tail coarse knife segment (MD #286566).
95. The kit includes one ClearCut coarse section, 25 pack (MD #286461), three knife splice kits (MD #286493), one LH coarse knife head segment (MD #286562), two center coarse knife segments (MD #286564), and one tail coarse knife segment (MD #286567).
96. The kit includes one ClearCut coarse section, 25 pack (MD #286461), four knife splice kits (MD #286493), one LH coarse knife head segment (MD #286562), two center coarse knife segments (MD #286564), one center coarse knife segment (MD #286565), and one tail coarse knife segment (MD #286567).
97. Quantities: FD230 = 1, FD235 = 2, and FD240 = 2.
98. Quantities: FD230 = 1, FD235 = 0, and FD240 = 1.
99. Quantities: FD230 = 1, FD235 = 0, and FD240 = 0.
100. Quantities: FD230 = 0, FD235 = 1, and FD240 = 1.
101. Quantities: FD230 = 3, FD235 = 3, and FD240 = 4.

35 Knives – Double-Knife Headers, Coarse-Tooth Sections (FD235 and FD240)

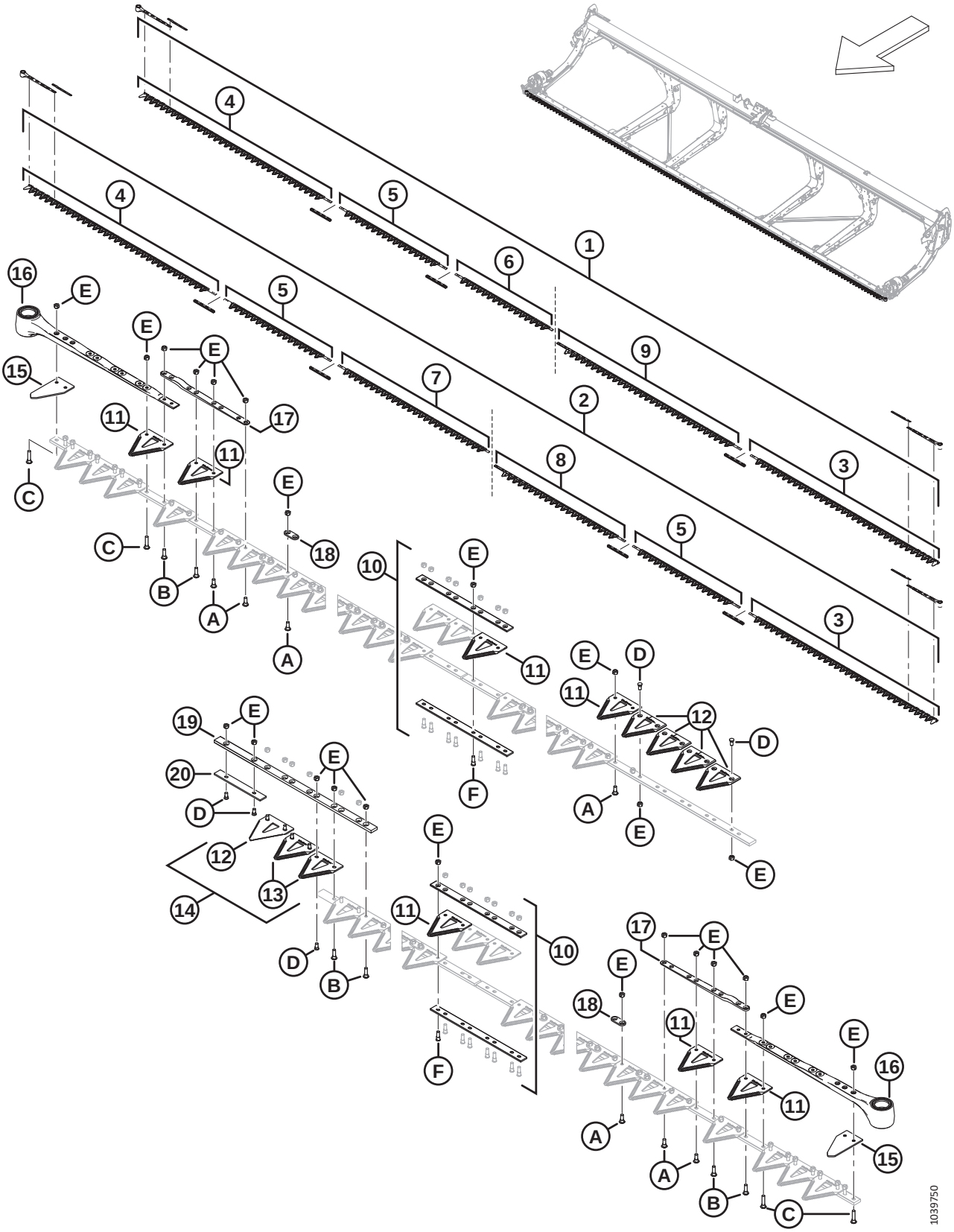

Ref	Part Number	Description	Qty	Serial Number
1	**286886**	**KIT – KNIFE 35 FT DK COARSE** [102]	**1**	
2	**286887**	**KIT – KNIFE 40 FT DK COARSE** [103]	**1**	
3	286562	KNIFE – HEAD SEGMENT LH COARSE 2676 MM	1	
4	286563	KNIFE – HEAD SEGMENT RH COARSE 2676 MM	1	
5	286565	KNIFE – CENTER SEGMENT COARSE 1520 MM [104]		
6	**286865**	**KNIFE – TAIL SEGMENT RH COARSE 1385 MM** [105]		
7	**286866**	**KNIFE – TAIL SEGMENT RH COARSE 2147 MM** [106]		
8	286574	KNIFE – TAIL SEGMENT LH COARSE 1856 MM [106]		
9	286575	KNIFE – TAIL SEGMENT LH COARSE 2618 MM [105]		
10	286493	KIT – KNIFE SPLICE [107]		
11	286461	SECTION – CLEARCUT COARSE (25 PACK)		
	286462	SECTION – CLEARCUT FINE (25 PACK)	OPT	
	286627	SECTION – CLEARCUT ULTRA COARSE (25 PACK)	OPT	
12	286463	SECTION – CLEARCUT COARSE TOP CSK (10 PACK)		
	286465	SECTION – CLEARCUT FINE TOP CSK (10 PACK)	OPT	
	286628	SECTION – CLEARCUT ULTRA COARSE TOP CSK (10 PACK)	OPT	
13	286464	SECTION – CLEARCUT COARSE BOTTOM CSK (10 PACK)		
	286466	SECTION – CLEARCUT FINE BOTTOM CSK (10 PACK)	OPT	
	286629	SECTION – CLEARCUT ULTRA COARSE BOTTOM CSK (10 PACK)	OPT	
14	**286861**	**KIT – CLEARCUT COARSE CENTER** [108]		
	286862	**KIT – CLEARCUT FINE CENTER** [109]	**OPT**	
	286863	**KIT – CLEARCUT ULTRA COARSE CENTER** [110]	**OPT**	
15	226983	SECTION – END	2	
16	226941	KNIFE HEAD ASSEMBLY	1	
	115670	O-RING – 1.78 X 34.64	1	
	113937	DISC	1	
	113222	SEAL KIT	1	
	100500	BEARING – NEEDLE	1	

102. The kit includes one ClearCut coarse section, 25 pack (MD #286461), three knife splice kits (MD #286493), one LH coarse knife head segment (MD #286562), one RH coarse knife head segment (MD #286563), one center coarse knife segment (MD #286565), one RH tail coarse knife segment (MD #286865), and one LH tail coarse knife segment (MD #286575).
103. The kit includes one ClearCut coarse section, 25 pack (MD #286461), four knife splice kits (MD #286493), one LH coarse knife head segment (MD #286562), one RH coarse knife head segment (MD #286563), two center coarse knife segments (MD #286565), one RH tail coarse knife segment (MD #286866), and one LH tail coarse knife segment (MD #286574).
104. Quantities: FD235 = 1 and FD240 = 2.
105. Quantities: FD235 = 1 and FD240 = 0.
106. Quantities: FD235 = 0 and FD240 = 1.
107. The kit includes bottom splice bar (NSS), top splice bar (NSS), eight screws (MD #286314), and eight nuts (MD #226259). Quantities: FD235 = 3 and FD240 = 4.
108. The kit includes five ClearCut coarse top CSK sections (NSS), two ClearCut coarse bottom CSK sections (NSS), and hardware.
109. The kit includes five ClearCut fine top CSK sections (NSS), two ClearCut fine bottom CSK sections (NSS), and hardware.
110. The kit includes five ClearCut ultra coarse top CSK sections (NSS), two ClearCut ultra coarse bottom CSK sections (NSS), and hardware.

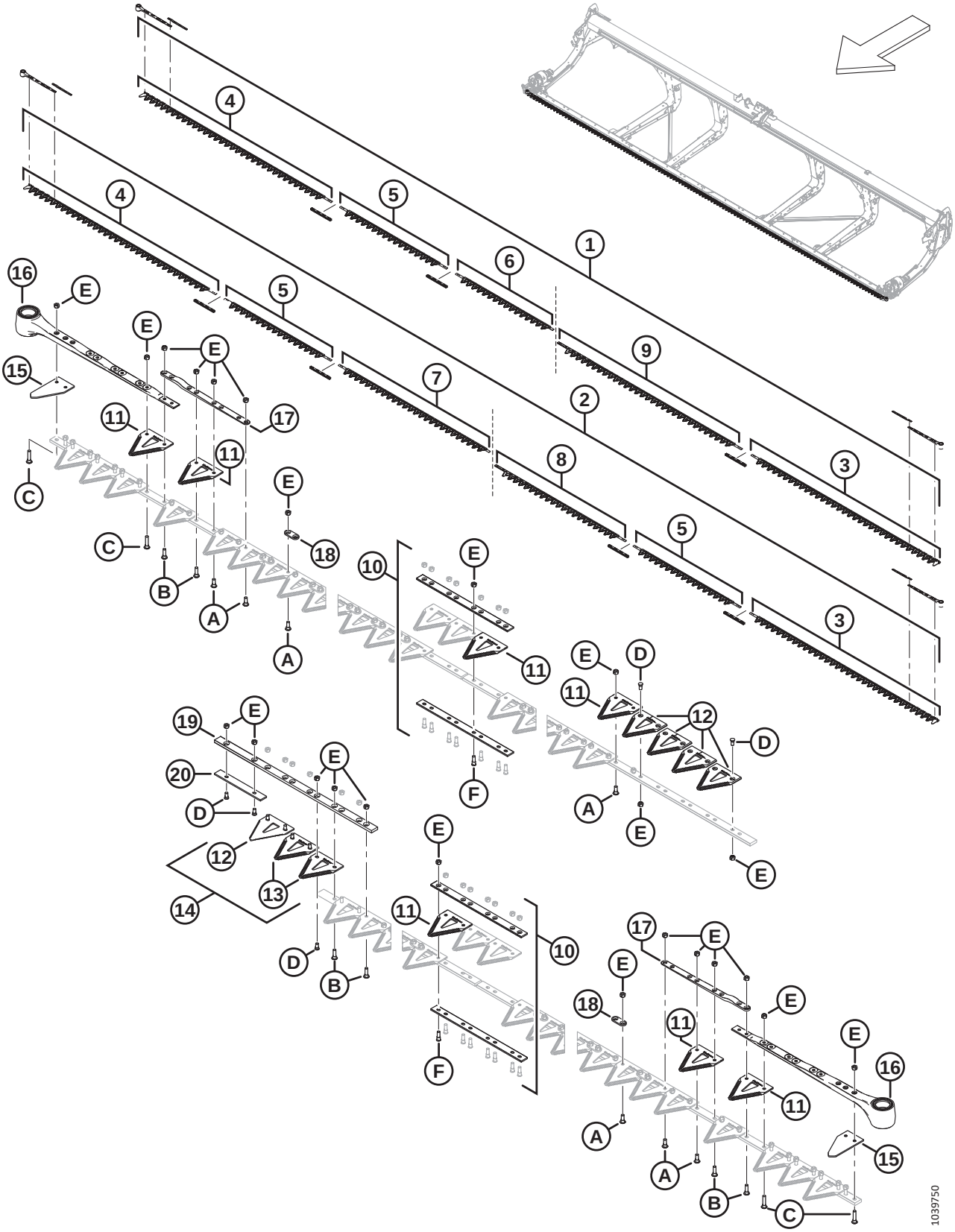
1039750

Ref	Part Number	Description	Qty	Serial Number
17	286440	BAR – FORGED	1	
18	286481	BAR – REINFORCEMENT (25 PACK)		
19	286362	BAR – KNIFE OVERLAP GUIDE	1	
20	286363	BAR – WEAR	1	
A	286475	SCREW – M6 X 18 MM, C/W NUT (50 PACK)		
B	286476	SCREW – M6 X 22 MM, C/W NUT (25 PACK)		
C	286477	SCREW – M6 X 29 MM, C/W NUT (25 PACK)		
D	286478	SCREW – CSK M6 X 14 MM, C/W NUT (25 PACK)		
E	286479	NUT – CTR LOC CSK M6 X 1 (50 PACK)		
F	286621	SCREW – CSK M6 X 22 MM, C/W NUT (25 PACK)		

36 Knives – Double-Knife Headers, Coarse-Tooth Sections (FD241)

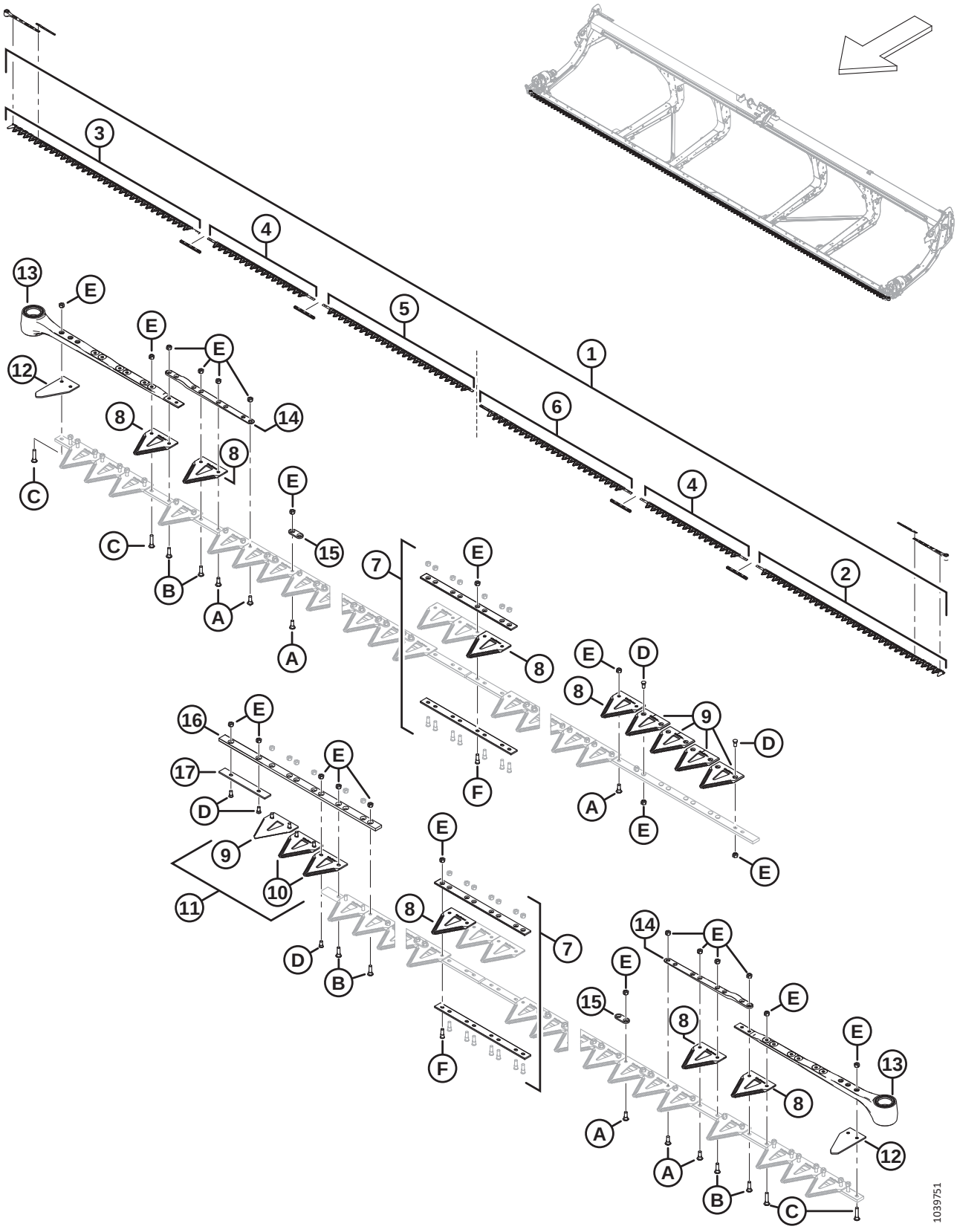

Ref	Part Number	Description	Qty	Serial Number
1	**286888**	**KIT – KNIFE 41 FT DK COARSE** [111]	**1**	
2	286562	KNIFE – HEAD SEGMENT LH COARSE 2676 MM	1	
3	286563	KNIFE – HEAD SEGMENT RH COARSE 2676 MM	1	
4	286565	KNIFE – CENTER SEGMENT COARSE 1520 MM	2	
5	**286866**	**KNIFE – TAIL SEGMENT RH COARSE 2147 MM**	**1**	
6	286576	KNIFE – TAIL SEGMENT LH COARSE 2161 MM	1	
7	286493	KIT – KNIFE SPLICE [112]	4	
8	286461	SECTION – CLEARCUT COARSE (25 PACK)		
	286462	SECTION – CLEARCUT FINE (25 PACK)	OPT	
	286627	SECTION – CLEARCUT ULTRA COARSE (25 PACK)	OPT	
9	286463	SECTION – CLEARCUT COARSE TOP CSK (10 PACK)		
	286465	SECTION – CLEARCUT FINE TOP CSK (10 PACK)	OPT	
	286628	SECTION – CLEARCUT ULTRA COARSE TOP CSK (10 PACK)	OPT	
10	286464	SECTION – CLEARCUT COARSE BOTTOM CSK (10 PACK)		
	286466	SECTION – CLEARCUT FINE BOTTOM CSK (10 PACK)	OPT	
	286629	SECTION – CLEARCUT ULTRA COARSE BOTTOM CSK (10 PACK)	OPT	
11	**286861**	**KIT – CLEARCUT COARSE CENTER** [113]		
	286862	**KIT – CLEARCUT FINE CENTER** [114]	**OPT**	
	286863	**KIT – CLEARCUT ULTRA COARSE CENTER** [115]	**OPT**	
12	226983	SECTION – END	2	
13	226941	KNIFE HEAD ASSEMBLY	2	
	115670	O-RING – 1.78 X 34.64		
	113937	DISC		
	113222	SEAL KIT		
	100500	BEARING – NEEDLE		
14	286440	BAR – FORGED	2	
15	286481	BAR – REINFORCEMENT (25 PACK)	2	
16	286362	BAR – KNIFE OVERLAP GUIDE	1	
17	286363	BAR – WEAR	1	
A	286475	SCREW – M6 X 18 MM, C/W NUT (50 PACK)		
B	286476	SCREW – M6 X 22 MM, C/W NUT (25 PACK)		
C	286477	SCREW – M6 X 29 MM, C/W NUT (25 PACK)		
D	286478	SCREW – CSK M6 X 14 MM, C/W NUT (25 PACK)		

111. The kit includes one ClearCut coarse section, 25 pack (MD #286461), four knife splice kits (MD #286493), one LH coarse knife head segment (MD #286562), one RH coarse knife head segment (MD #286563), two center coarse knife segments (MD #286565), one RH tail coarse knife segment (MD #286866), and one LH tail coarse knife segment (MD #286576).
112. The kit includes bottom splice bar (NSS), top splice bar (NSS), eight screws (MD #286314), and eight nuts (MD #226259).
113. The kit includes five ClearCut coarse top CSK sections (NSS), two ClearCut coarse bottom CSK sections (NSS), and hardware.
114. The kit includes five ClearCut fine top CSK sections (NSS), two ClearCut fine bottom CSK sections (NSS), and hardware.
115. The kit includes five ClearCut ultra coarse top CSK sections (NSS), two ClearCut ultra coarse bottom CSK sections (NSS), and hardware.

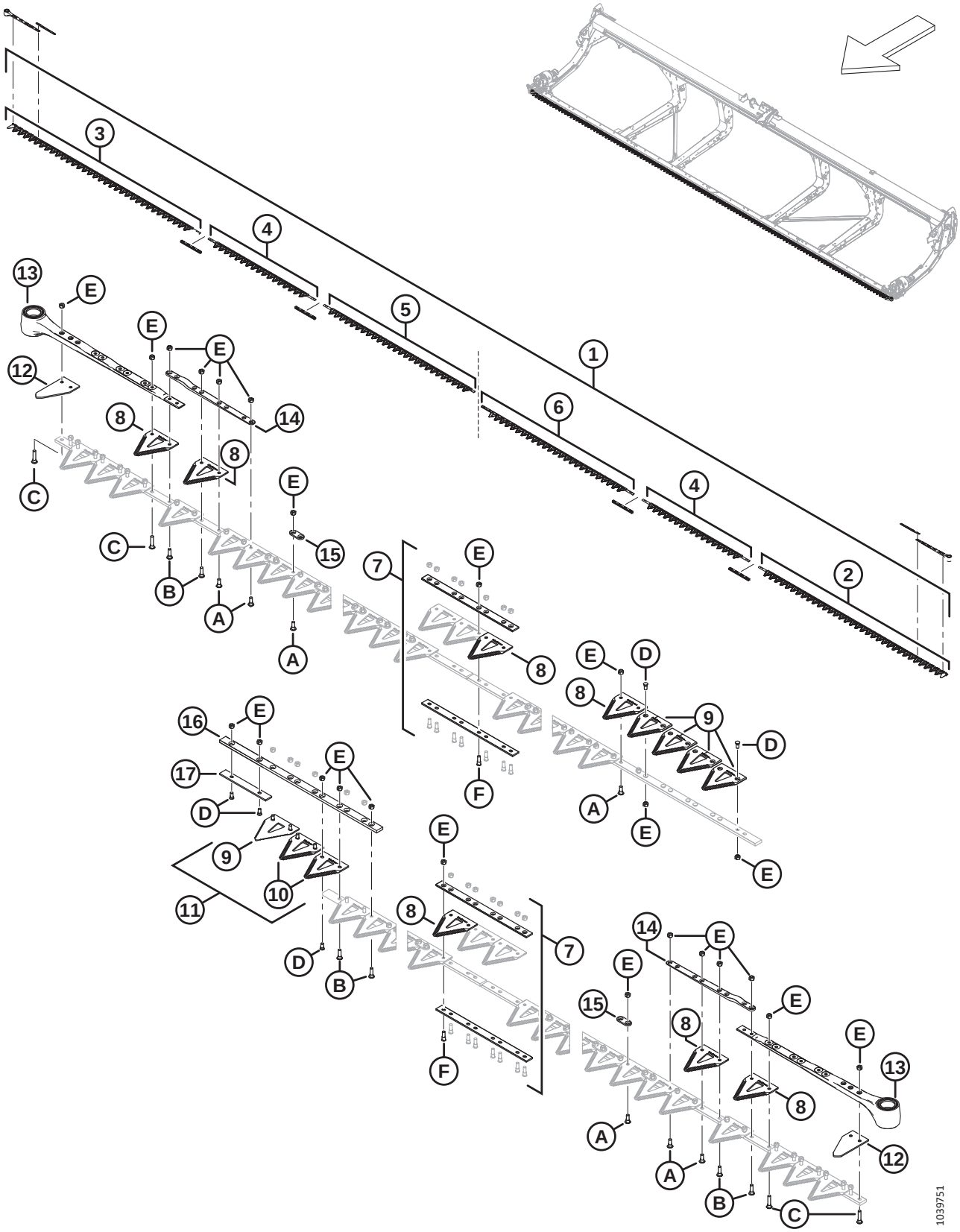
1039751

Ref	Part Number	Description	Qty	Serial Number
E	286479	NUT – CTR LOC CSK M6 X 1 (50 PACK)		
F	286621	SCREW – CSK M6 X 22 MM, C/W NUT (25 PACK)		

37 Knives – Double-Knife Headers, Coarse-Tooth Sections (FD245)

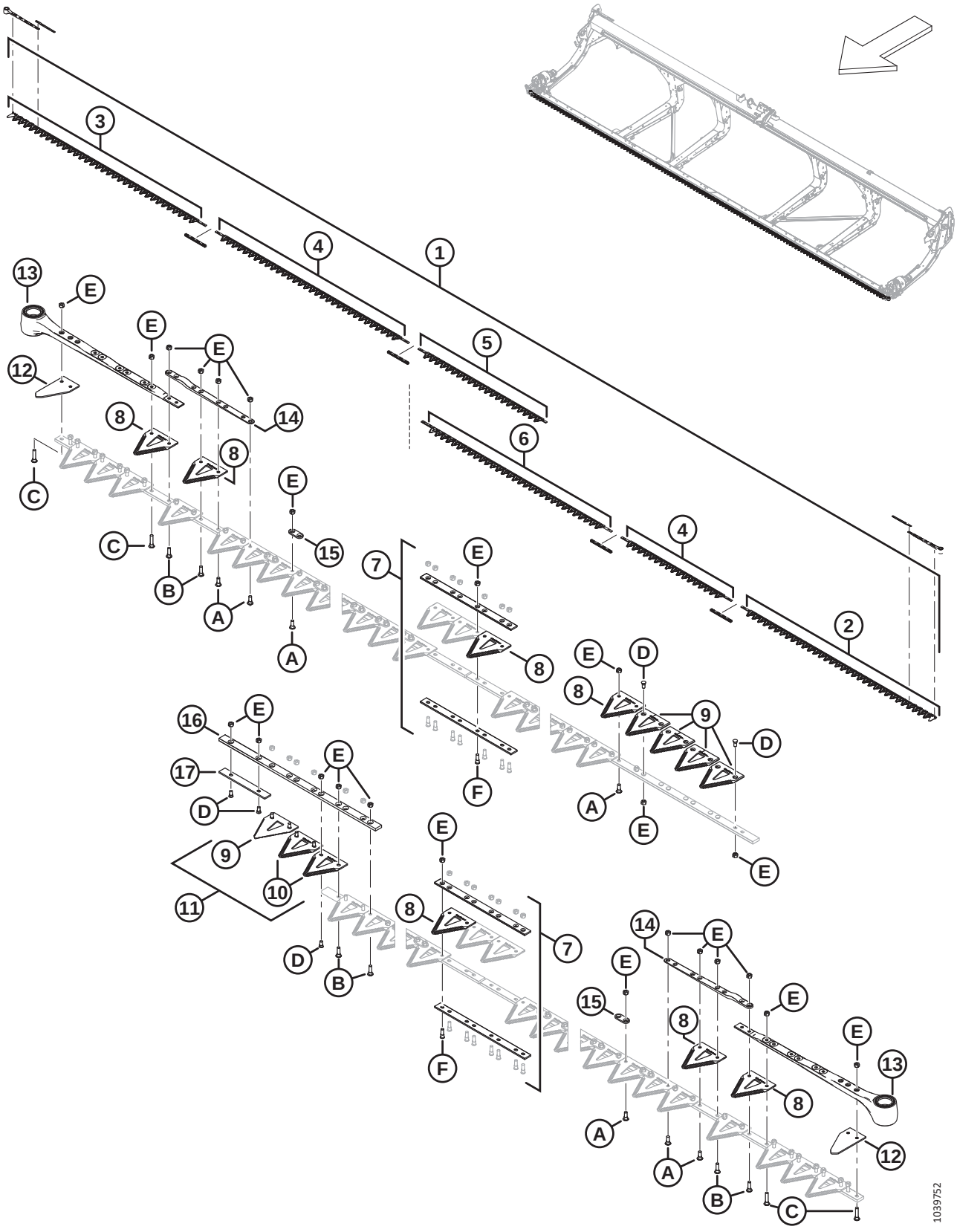

Ref	Part Number	Description	Qty	Serial Number
1	**286889**	**KIT – KNIFE 45 FT DK COARSE** [116]	**1**	
2	286562	KNIFE – HEAD SEGMENT LH COARSE 2676 MM	1	
3	286563	KNIFE – HEAD SEGMENT RH COARSE 2676 MM	1	
4	286564	KNIFE – CENTER SEGMENT COARSE 2663 MM	1	
	286565	KNIFE – CENTER SEGMENT COARSE 1520 MM	1	
5	**286867**	**KNIFE – TAIL SEGMENT RH COARSE 1766 MM**	**1**	
6	286575	KNIFE – TAIL SEGMENT LH COARSE 2618 MM	1	
7	286493	KIT – KNIFE SPLICE [117]	4	
8	286461	SECTION – CLEARCUT COARSE (25 PACK)		
	286462	SECTION – CLEARCUT FINE (25 PACK)	OPT	
	286627	SECTION – CLEARCUT ULTRA COARSE (25 PACK)	OPT	
9	286463	SECTION – CLEARCUT COARSE TOP CSK (10 PACK)		
	286465	SECTION – CLEARCUT FINE TOP CSK (10 PACK)	OPT	
	286628	SECTION – CLEARCUT ULTRA COARSE TOP CSK (10 PACK)	OPT	
10	286464	SECTION – CLEARCUT COARSE BOTTOM CSK (10 PACK)		
	286466	SECTION – CLEARCUT FINE BOTTOM CSK (10 PACK)	OPT	
	286629	SECTION – CLEARCUT ULTRA COARSE BOTTOM CSK (10 PACK)	OPT	
11	**286861**	**KIT – CLEARCUT COARSE CENTER** [118]		
	286862	**KIT – CLEARCUT FINE CENTER** [119]	**OPT**	
	286863	**KIT – CLEARCUT ULTRA COARSE CENTER** [120]	**OPT**	
12	226983	SECTION – END	2	
13	226941	KNIFE HEAD ASSEMBLY	2	
	115670	O-RING – 1.78 X 34.64		
	113937	DISC		
	113222	SEAL KIT		
	100500	BEARING – NEEDLE		
14	286440	BAR – FORGED	2	
15	286481	BAR – REINFORCEMENT (25 PACK)	2	
16	286362	BAR – KNIFE OVERLAP GUIDE	1	
17	286363	BAR – WEAR	1	
A	286475	SCREW – M6 X 18 MM, C/W NUT (50 PACK)		
B	286476	SCREW – M6 X 22 MM, C/W NUT (25 PACK)		
C	286477	SCREW – M6 X 29 MM, C/W NUT (25 PACK)		

116. The kit includes one ClearCut coarse section, 25 pack (MD #286461), four knife splice kits (MD #286493), one LH coarse knife head segment (MD #286562), one RH coarse knife head segment (MD #286563), one center coarse knife segment (2663 mm) (MD #286564), one center coarse knife segment (1520 mm) (MD #286565), one RH tail coarse knife segment (MD #286867), and one LH tail coarse knife segment (MD #286575).
117. The kit includes bottom splice bar (NSS), top splice bar (NSS), eight screws (MD #286314), and eight nuts (MD #226259).
118. The kit includes five ClearCut coarse top CSK sections (NSS), two ClearCut coarse bottom CSK sections (NSS), and hardware.
119. The kit includes five ClearCut fine top CSK sections (NSS), two ClearCut fine bottom CSK sections (NSS), and hardware.
120. The kit includes five ClearCut ultra coarse top CSK sections (NSS), two ClearCut ultra coarse bottom CSK sections (NSS), and hardware.

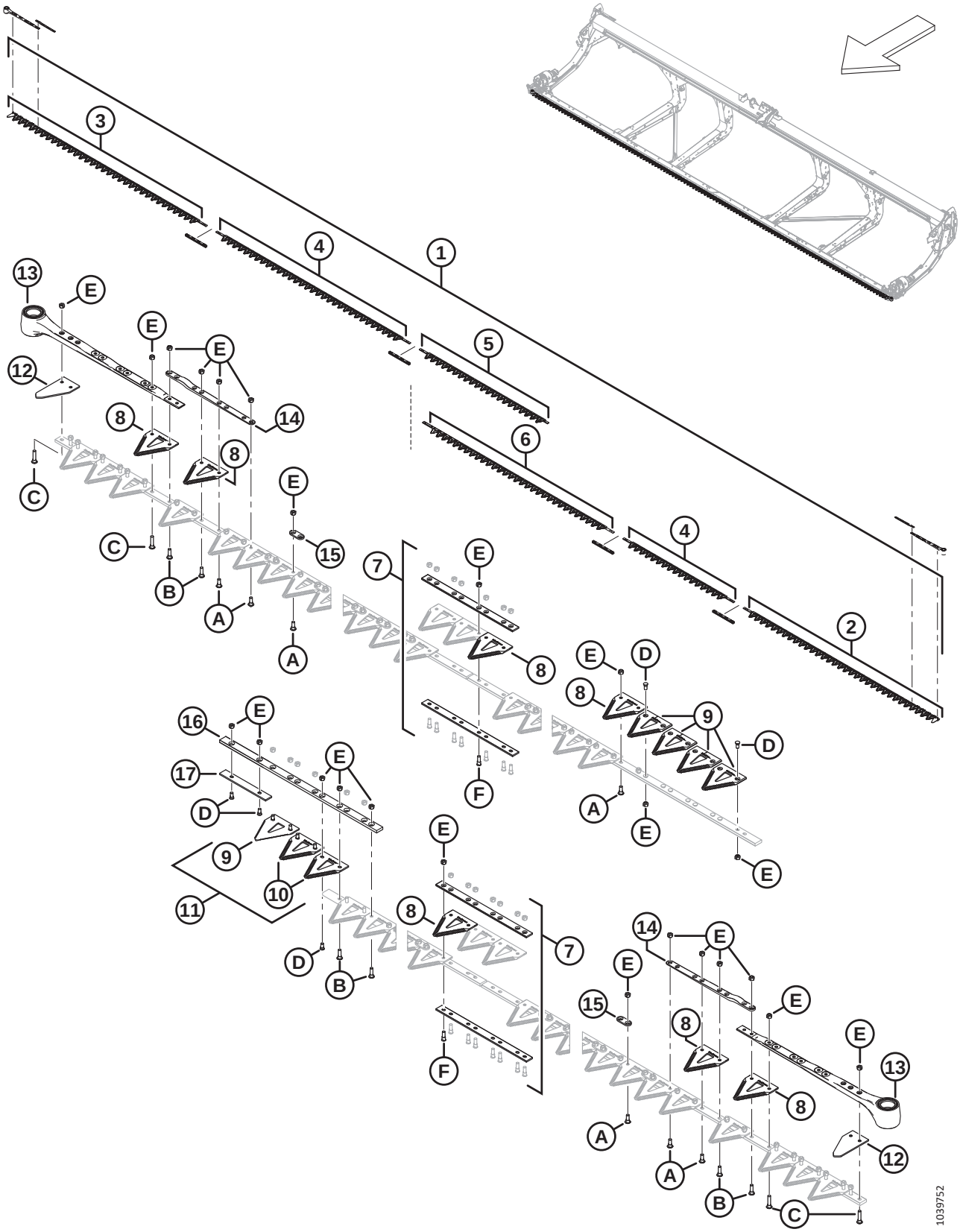
1039752

Ref	Part Number	Description	Qty	Serial Number
D	286478	SCREW – CSK M6 X 14 MM, C/W NUT (25 PACK)		
E	286479	NUT – CTR LOC CSK M6 X 1 (50 PACK)		
F	286621	SCREW – CSK M6 X 22 MM, C/W NUT (25 PACK)		

38 Knives – Double-Knife Headers, Coarse-Tooth Sections (FD250)

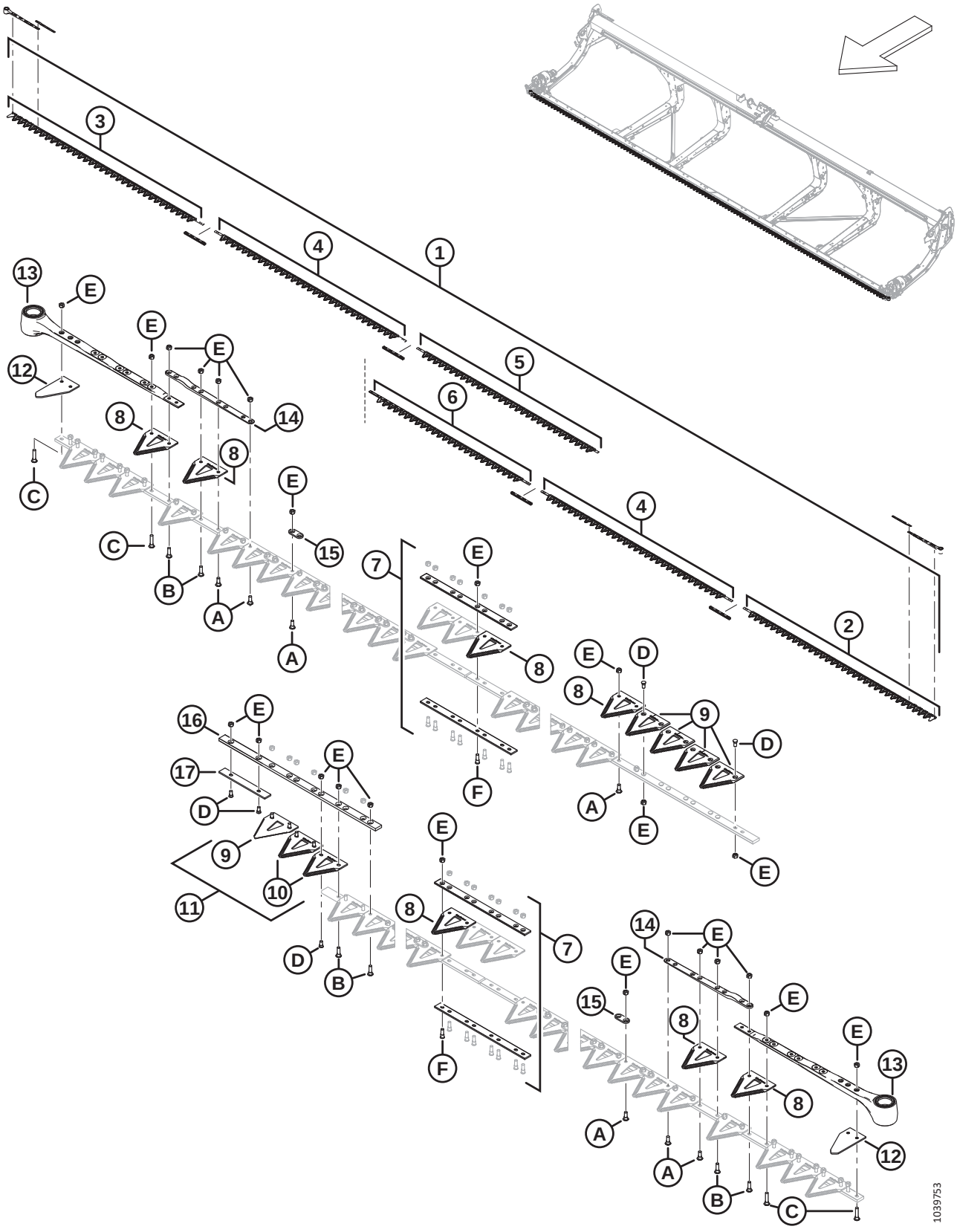

Ref	Part Number	Description	Qty	Serial Number
1	**286890**	**KIT – KNIFE 50 FT DK COARSE** [121]	**1**	
2	286562	KNIFE – HEAD SEGMENT LH COARSE 2676 MM	1	
3	286563	KNIFE – HEAD SEGMENT RH COARSE 2676 MM	1	
4	286564	KNIFE – CENTER SEGMENT COARSE 2663 MM	2	
5	**286868**	**KNIFE – TAIL SEGMENT RH COARSE 2528 MM**	**1**	
6	286578	KNIFE – TAIL SEGMENT LH COARSE 2237 MM	1	
7	286493	KIT – KNIFE SPLICE [122]	4	
8	286461	SECTION – CLEARCUT COARSE (25 PACK)		
	286462	SECTION – CLEARCUT FINE (25 PACK)	OPT	
	286627	SECTION – CLEARCUT ULTRA COARSE (25 PACK)	OPT	
9	286463	SECTION – CLEARCUT COARSE TOP CSK (10 PACK)		
	286465	SECTION – CLEARCUT FINE TOP CSK (10 PACK)	OPT	
	286628	SECTION – CLEARCUT ULTRA COARSE TOP CSK (10 PACK)	OPT	
10	286464	SECTION – CLEARCUT COARSE BOTTOM CSK (10 PACK)		
	286466	SECTION – CLEARCUT FINE BOTTOM CSK (10 PACK)	OPT	
	286629	SECTION – CLEARCUT ULTRA COARSE BOTTOM CSK (10 PACK)	OPT	
11	**286861**	**KIT – CLEARCUT COARSE CENTER** [123]		
	286862	**KIT – CLEARCUT FINE CENTER** [124]	**OPT**	
	286863	**KIT – CLEARCUT ULTRA COARSE CENTER** [125]	**OPT**	
12	226983	SECTION – END	2	
13	226941	KNIFE HEAD ASSEMBLY	2	
	115670	O-RING – 1.78 X 34.64		
	113937	DISC		
	113222	SEAL KIT		
	100500	BEARING – NEEDLE		
14	286440	BAR – FORGED	2	
15	286481	BAR – REINFORCEMENT (25 PACK)	2	
16	286362	BAR – KNIFE OVERLAP GUIDE	1	
17	286363	BAR – WEAR	1	
A	286475	SCREW – M6 X 18 MM, C/W NUT (50 PACK)		
B	286476	SCREW – M6 X 22 MM, C/W NUT (25 PACK)		
C	286477	SCREW – M6 X 29 MM, C/W NUT (25 PACK)		
D	286478	SCREW – CSK M6 X 14 MM, C/W NUT (25 PACK)		

121. The kit includes one ClearCut coarse section, 25 pack (MD #286461), four knife splice kits (MD #286493), one LH coarse knife head segment (MD #286562), one RH coarse knife head segment (MD #286563), two center coarse knife segments (MD #286564), one RH tail coarse knife segment (MD #286868), and one LH tail coarse knife segment (MD #286578).
122. The kit includes bottom splice bar (NSS), top splice bar (NSS), eight screws (MD #286314), and eight nuts (MD #226259).
123. The kit includes five ClearCut coarse top CSK sections (NSS), two ClearCut coarse bottom CSK sections (NSS), and hardware.
124. The kit includes five ClearCut fine top CSK sections (NSS), two ClearCut fine bottom CSK sections (NSS), and hardware.
125. The kit includes five ClearCut ultra coarse top CSK sections (NSS), two ClearCut ultra coarse bottom CSK sections (NSS), and hardware.

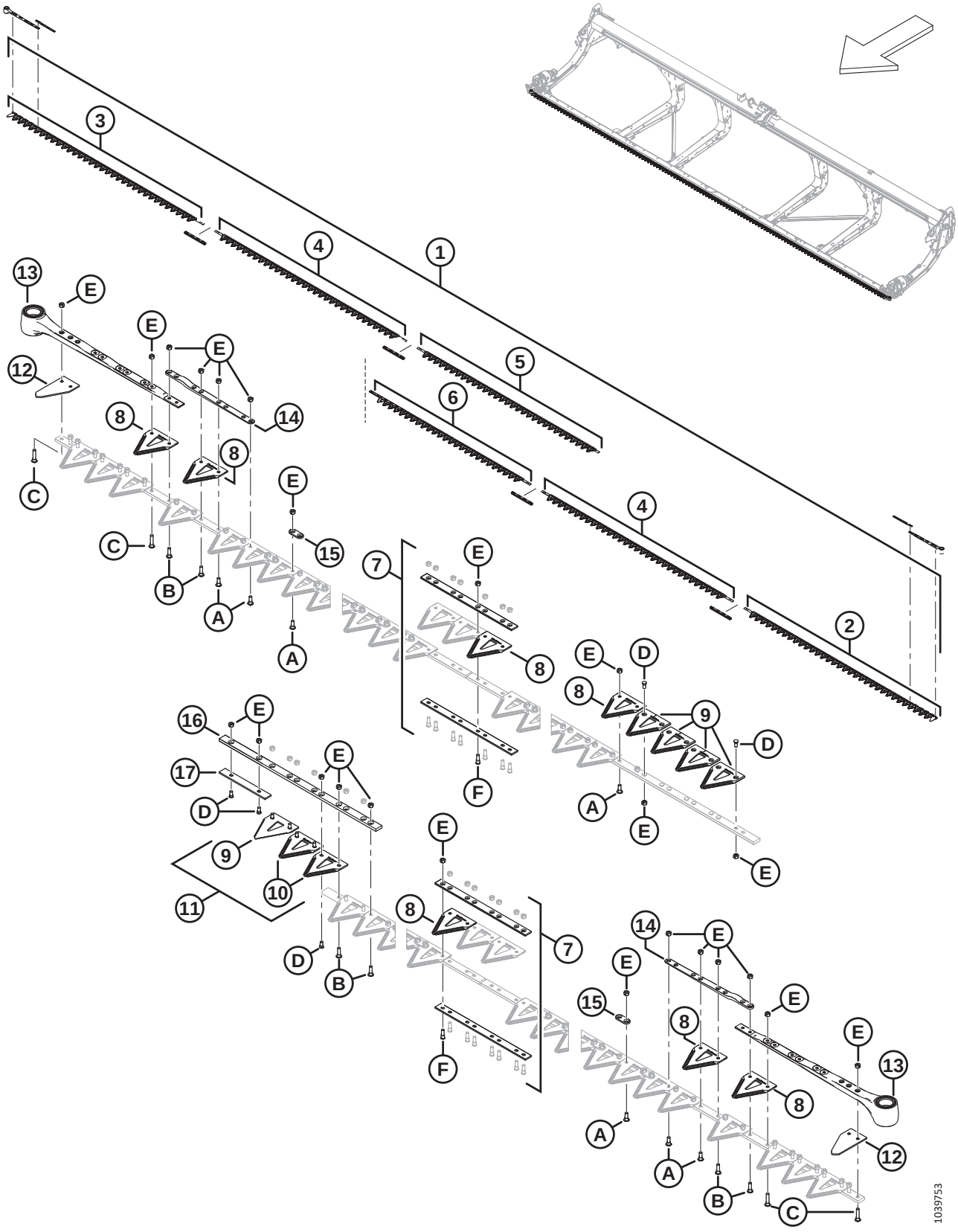
1039753

Ref	Part Number	Description	Qty	Serial Number
E	286479	NUT – CTR LOC CSK M6 X 1 (50 PACK)		
F	286621	SCREW – CSK M6 X 22 MM, C/W NUT (25 PACK)		

39 Knife Drive – Single and Double Knife

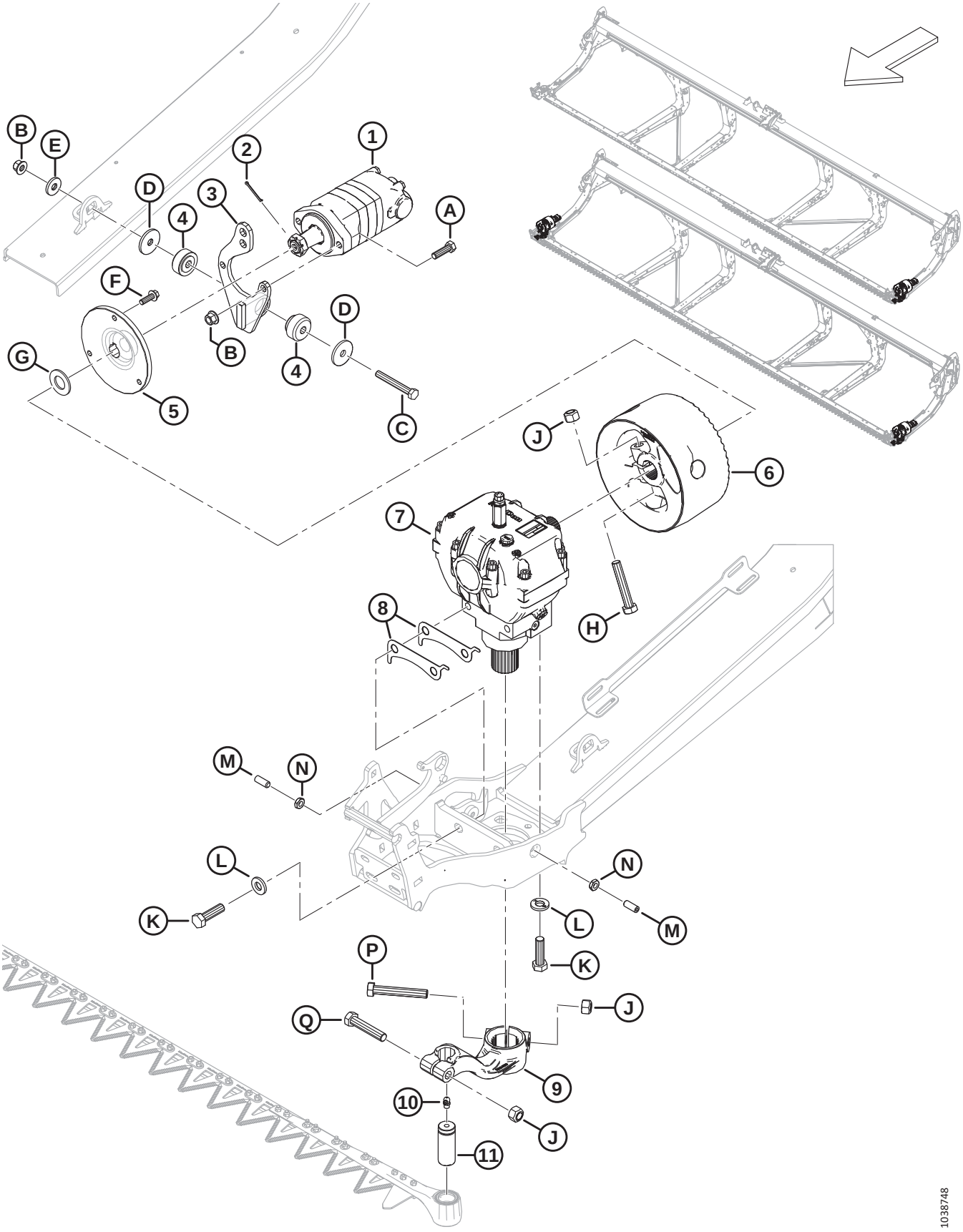

Ref	Part Number	Description	Qty	Serial Number
1	283002	MOTOR – EATON 2000 100 CC [126]	1	
	174304	SEAL KIT – EATON 2000 MOTOR		
	137375	NUT – SLTD JAM 1.0 -20 UNEF		
2	18606	PIN – COTTER 1/8 DIA X 1.5 ZP	1	
3	286354	SUPPORT – WELDT SAE-A MOTOR	1	
4	143107	BUSHING – RUBBER [127]	1	
5	286087	HUB – MACHINED	1	
6	286703	FLYWHEEL – KNIFE DRIVE C/W DECAL	1	
7	286089	DRIVE – KNIFE [128]	1	
8	226400	SHIM – KNIFE DRIVE BOX [129]		
9	226926	ARM – LH KNIFE DRIVE C/W DECAL	1	
	226927	ARM – RH KNIFE DRIVE C/W DECAL (DOUBLE KNIFE ONLY)	1	
10	21194	FITTING – LUBRICATION 90° 1/8 NPT	1	
11	113229	PIN – SICKLE HEAD	1	
A	184669	BOLT – HEX HD M12 X 1.75 X 40-8.8-AA1J	2	
B	136431	NUT – HEX FLG CTR LOC M12 X 1.75-10	3	
C	184673	BOLT – HEX HD M12 X 1.75 X 90-10.9-AA1J	1	
D	11695	WASHER – FLAT	2	
E	4761	WASHER – FLAT	1	
F	184665	BOLT – HEX FLG HD M10 X 1.5 X 30-10.9-AA1J	3	
G	18603	WASHER – FLAT SAE 1 1/16 ID X 2.0 IN OD AA1J	1	
H	320214	BOLT – HEX HD M16 X 2 X 90-10.9-ZINC	1	
J	320026	NUT – HEX TOP LOCK M16 X 2-10-ZINC	3	
K	320311	BOLT – HEX HD M16 X 2 X 55-12.9-ZINC	4	
L	120901	WASHER – HARD L9 SPCL 5/8-82/85 HR 15N-AB0C	4	
M	320089	SCREW – SET M12 X 1.75 X 30 [130]	2	
N	184696	NUT – HEX THIN M12 X 1.75-05-AA1J	2	
P	320215	BOLT – HEX HD M16 X 2 X 100-10.9-ZINC	1	
Q	152602	BOLT – HEX HD M16 X 2 X 80-10.9-AA1J	1	

126. Motor includes seal kit (MD #174304), key, and slotted nut (MD #137375).
127. The rubber bushing (MD #143107) includes both halves shown in the illustration.
128. For repair parts, refer to Section *40 Knife Drive Box, page 91*.
129. Shim quantity can be 0 to 4. Shim quantity is adjustable for assembly clearances.
130. Set screw is used to adjust knife drive (MD #286089) left to right within the specified tolerance. Tighten lock nut (MD #184696) once knife drive has been adjusted correctly.

40 Knife Drive Box

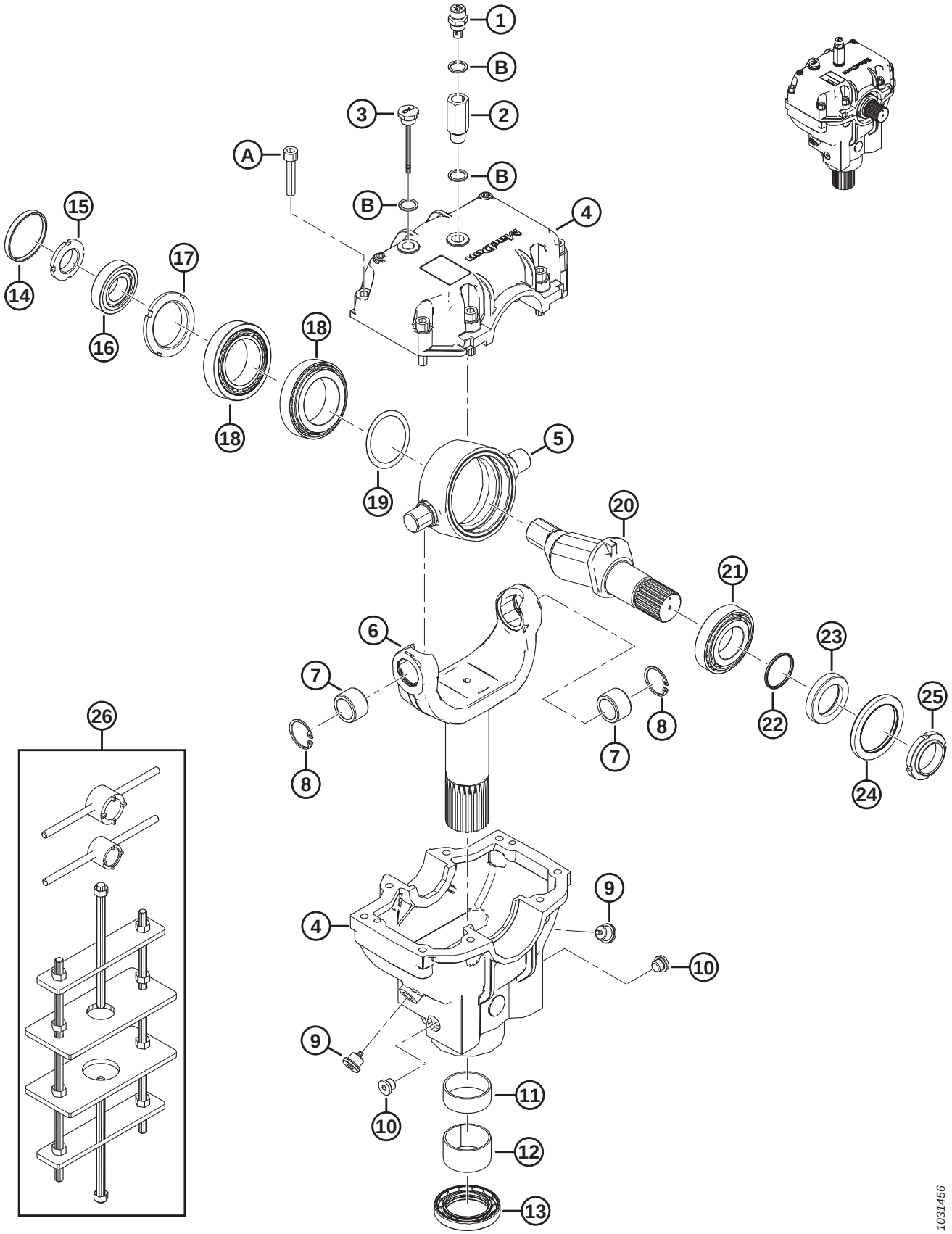

KNIFE DRIVE BOX

Ref	Part Number	Description	Qty	Serial Number
	286089	DRIVE – KNIFE		
1	286489	PLUG – BREATHER	1	
2	257089	EXTENSION	1	
3	286490	PLUG – LEVEL	1	
4	286485	CASTING – KNIFE DRIVE BOX [131]	1	
5	100721	PIVOT	1	
6	286483	YOKE	1	
7	100723	BUSHING – BRONZE	2	
8	100722	RING – RETAINING INTERNAL	2	
9	286488	PLUG – DRAIN	2	
10	252423	PLUG – DRAIN	2	
11	100726	BUSHING – STEEL	1	
12	286486	BUSHING – STEEL	1	
13	286445	SEAL – OIL	1	
14	100719	CAP – DUST	1	
15	100718	NUT – SPECIAL LOCK M30 X 1.5 CLASS 8.8	1	
16	100717	ASSSEMBLY – BEARING (CUP AND CONE)	1	
17	100715	NUT – SPECIAL LOCK M55 X 2 CLASS 8.8	1	
18	100720	ASSEMBLY – BEARING (CUP AND CONE)	2	
19	113152	KIT – SHIM	1	
20	100710	SHAFT	1	
21	100714	BEARING – ASSEMBLY CUP AND CONE	1	
22	100712	O-RING – 2.62 X 40.95	1	
23	102629	SPACER	1	
24	102630	SEAL – OIL (DOUBLE LIP)	1	
25	100709	NUT – SPECIAL M40 X 1.5 CLASS 8.8	1	
26	139003	KIT – WOBBLE BOX TOOL [132]	A/R	
A	113153	SCREW – HEX SOC HD M10 X 1.5 X 50-8.8-BO		
B	257054	WASHER – COPPER		

131. Knife drive box casting Includes top and bottom knife drive box castings and eight screws (MD #113153).
132. The kit includes large socket tool, small socket tool, and wobble box jig frame.

41 Reel Support Arm and Lift Cylinders – Center Arm (FD230, FD235, FD240, and FD241)

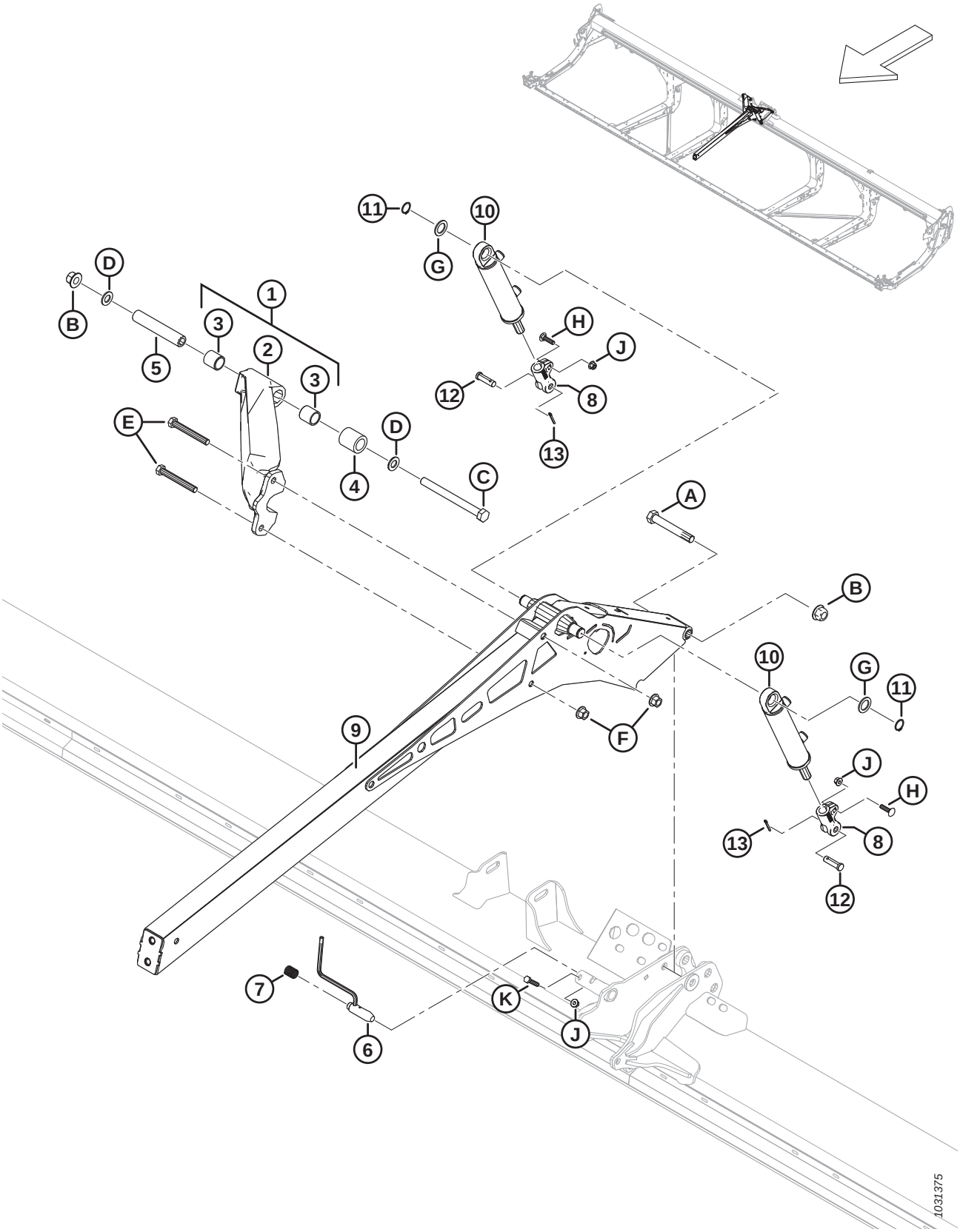

Ref	Part Number	Description	Qty	Serial Number
1	311627	BRACE – SUB ASSY C/W BUSHINGS [133]	1	
2	273798	BRACE – MACHINED	1	
3	311613	BUSHING	2	
4	311612	SPACER – BRACE REEL PIVOT	1	
5	311611	TUBE – PIVOT REEL BRACE	1	
6	273680	WELDT – PIN	1	
7	289880	SPRING – COMPRESSION	1	
8	273860	CLEVIS – CYL END MACHINED	2	
9	273795	ARM – CENTER WELDT	1	
10	273790	CYLINDER – HYD	2	
	311285	SEAL KIT		
11	30144	RING – EXT RETAINING	2	
12	18621	PIN – CLEVIS	2	
13	18648	PIN – COTTER 3/16 DIA X 1.25 ZP	2	
A	320196	BOLT – HEX HD M20 X 2.5 X 140-SPCL-10.9-ZINC		
B	136122	NUT – HEX FLG CTR LOC M20 X 2.5-10-AA1J		
C	252581	BOLT – HEX HD M20 X 2.5 X 220-10.9-AA1J		
D	136701	WASHER – NORDLOCK M20		
E	320168	BOLT – HEX HD M16 X 2 X 125-8.8-ZINC		
F	136440	NUT – HEX FLG CTR LK M16 X 2-10-AA1J		
G	156178	WASHER – THRUST		
H	152732	BOLT – RHSN M10 X 1.5 X 40-8.8-AA1J		
J	135799	NUT – HEX FLG CTR LOC M10 X 1.5-10		
K	30629	BOLT – HEX HD M10 X 1.5 X 50-8.8-A3L		

133. Includes machined brace (MD #273798) and two bushings (MD #311613).

42 Reel Support Arm and Lift Cylinders – Center Arm, Right Side (FD240, FD245, and FD250)

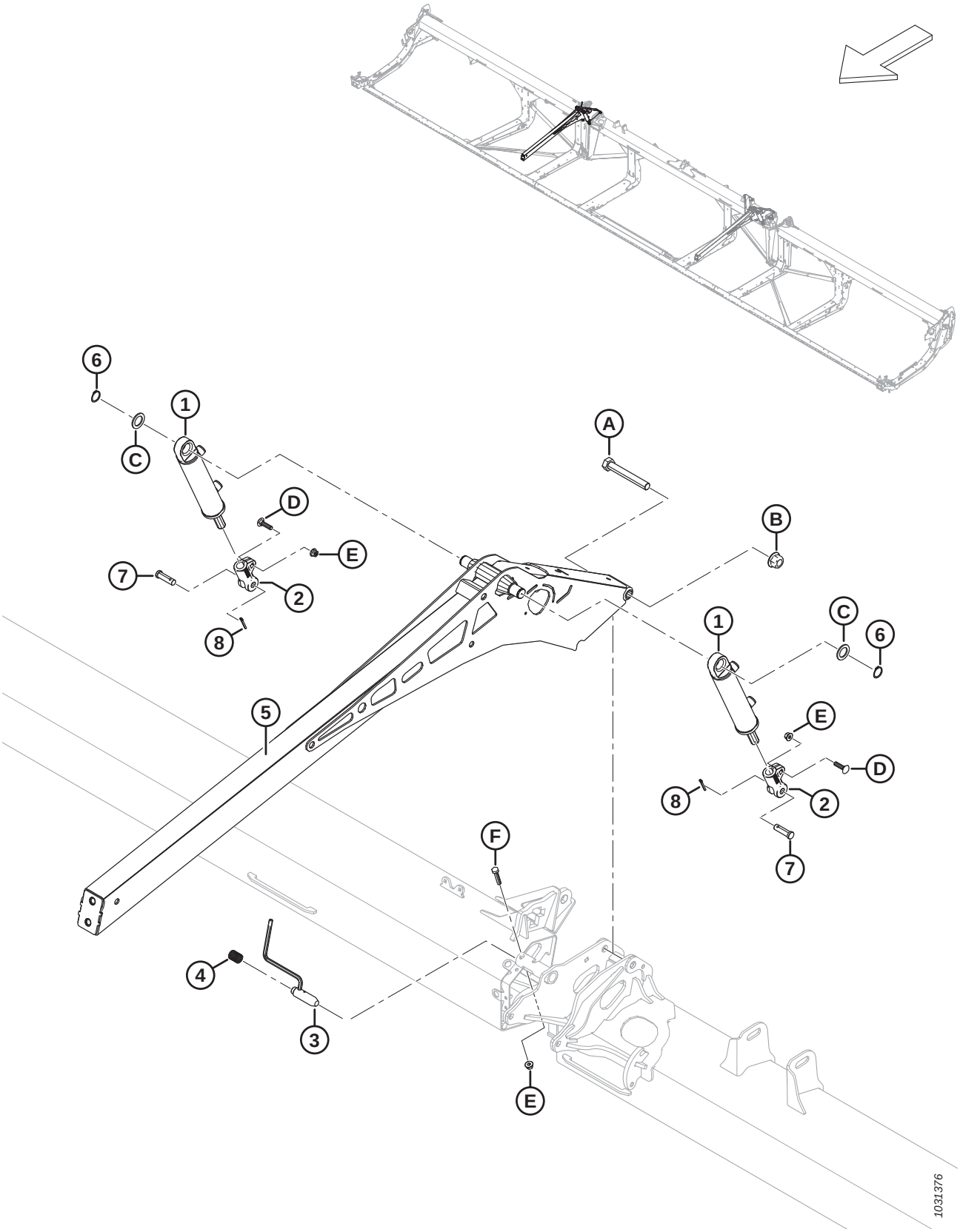

REEL SUPPORT ARM AND LIFT CYLINDERS – CENTER ARM, RIGHT SIDE (FD240, FD245, AND FD250)

Ref	Part Number	Description	Qty	Serial Number
1	273790	CYLINDER – HYD	2	
	311285	SEAL KIT		
2	273860	CLEVIS – CYL END MACHINED	2	
3	273680	WELDT – PIN	1	
4	289880	SPRING – COMPRESSION	1	
5	273795	ARM – CENTER WELDT	2	
6	30144	RING – EXT RETAINING	2	
7	18621	PIN – CLEVIS	2	
8	18648	PIN – COTTER 3/16 DIA X 1.25 ZP	2	
A	320196	BOLT – HEX HD M20 X 2.5 X 140-SPCL-10.9-ZINC	2	
B	136122	NUT – HEX FLG CTR LOC M20 X 2.5-10-AA1J	3	
C	156178	WASHER – THRUST	4	
D	152732	BOLT – RHSN M10 X 1.5 X 40-8.8-AA1J	4	
E	135799	NUT – HEX FLG CTR LOC M10 X 1.5-10	6	
F	30629	BOLT – HEX HD M10 X 1.5 X 50-8.8-A3L	2	

43 Reel Support Arm and Lift Cylinders – Center Arm, Left Side (FD240, FD245, and FD250)

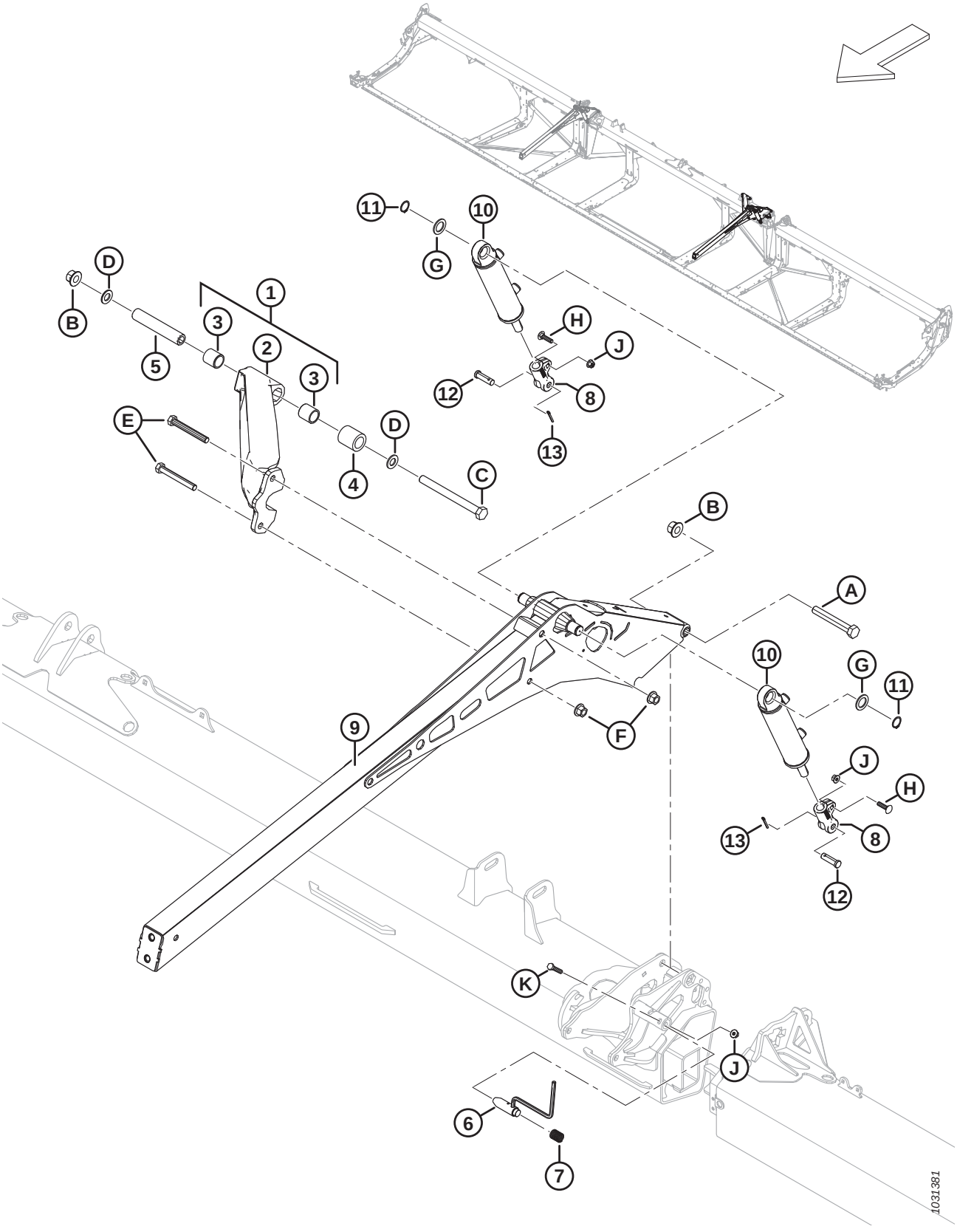

REEL SUPPORT ARM AND LIFT CYLINDERS – CENTER ARM, LEFT SIDE (FD240, FD245, AND FD250)

Ref	Part Number	Description	Qty	Serial Number
1	311627	BRACE – SUB ASSY C/W BUSHINGS [134]	1	
2	273798	BRACE – MACHINED	1	
3	311613	BUSHING	2	
4	311612	SPACER – BRACE REEL PIVOT	1	
5	311611	TUBE – PIVOT REEL BRACE	1	
6	273680	WELDT – PIN	1	
7	289880	SPRING – COMPRESSION	1	
8	273860	CLEVIS – CYL END MACHINED	2	
9	273795	ARM – CENTER WELDT	1	
10	273791	CYLINDER – HYD	2	
	313794	SEAL KIT		
11	30144	RING – EXT RETAINING	2	
12	18621	PIN – CLEVIS	2	
13	18648	PIN – COTTER 3/16 DIA X 1.25 ZP	2	
A	320196	BOLT – HEX HD M20 X 2.5 X 140-SPCL-10.9-ZINC		
B	136122	NUT – HEX FLG CTR LOC M20 X 2.5-10-AA1J		
C	252581	BOLT – HEX HD M20 X 2.5 X 220-10.9-AA1J		
D	136701	WASHER – NORDLOCK M20		
E	320168	BOLT – HEX HD M16 X 2 X 125-8.8-ZINC		
F	136440	NUT – HEX FLG CTR LK M16 X 2-10-AA1J		
G	156178	WASHER – THRUST		
H	152732	BOLT – RHSN M10 X 1.5 X 40-8.8-AA1J		
J	135799	NUT – HEX FLG CTR LOC M10 X 1.5-10		
K	30629	BOLT – HEX HD M10 X 1.5 X 50-8.8-A3L		

134. Assembly includes machined brace (MD #273798) and two bushings (MD #311613).

44 Reel Support Arm and Lift Cylinders – Outer Arms, Single Reel

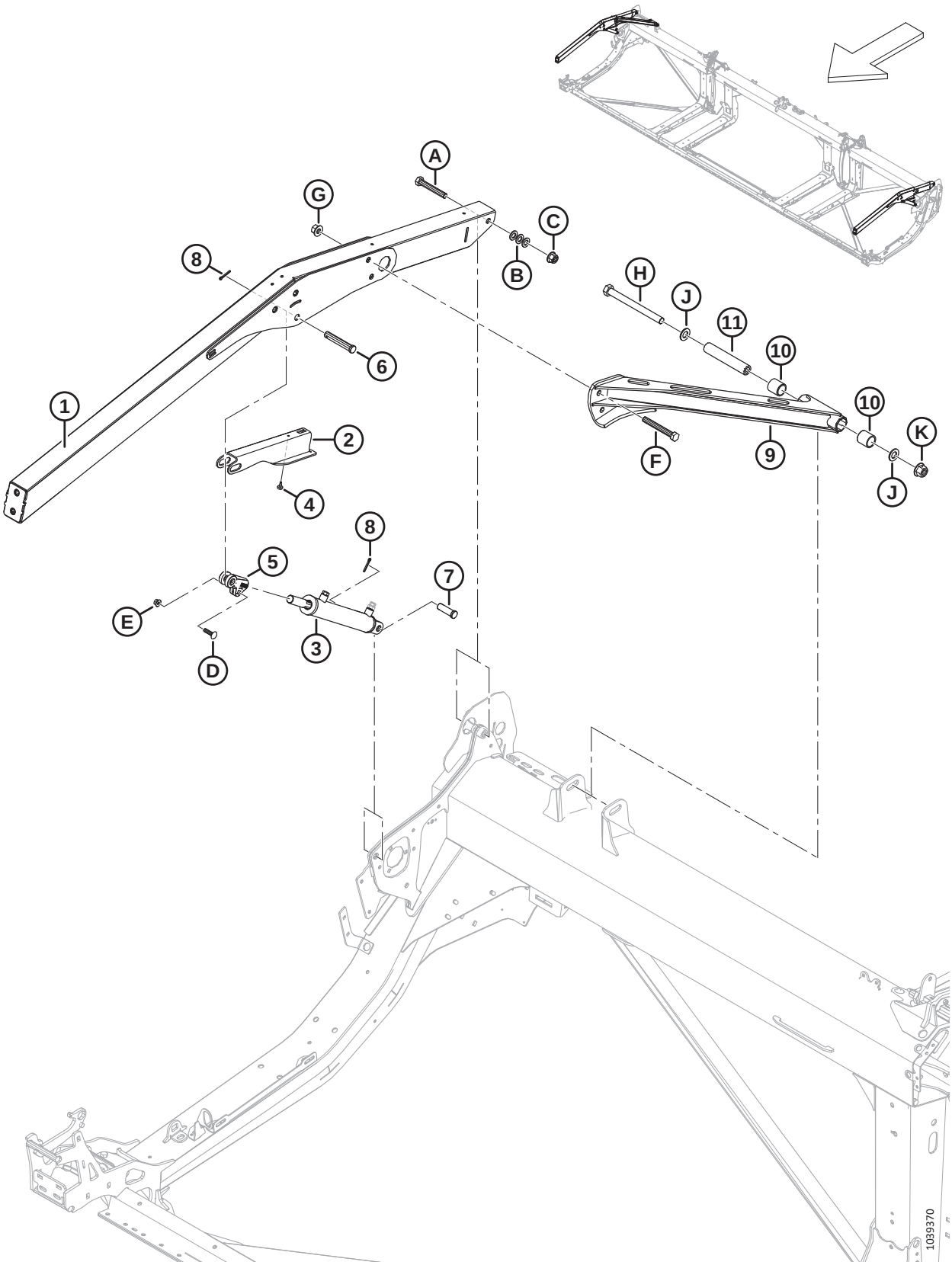

Ref	Part Number	Description	Qty	Serial Number
1	360035	ASSY – SR OUTER ARM W/ DECAL [135]	2	
2	340191	SUPPORT – REEL PROP	2	
3	273788	CYLINDER – HYD (RH) [136]	1	
	323687	SEAL KIT		
	273789	CYLINDER – HYD (LH) [136]	1	
	323688	SEAL KIT		
	174879	BREATHER – ORB #6		
4	273653	BUMPER – RUBBER	2	
5	228338	CLEVIS – CYL END MACHINED	2	
6	18629	PIN – CLEVIS	2	
7	18626	PIN – CLEVIS (RH) [137]	1	
	322970	PIN – CLEVIS 3/4 X 1-31/32 (LH) [137]	1	
8	18648	PIN – COTTER 3/16 DIA X 1.25 ZP	4	
9	340648	BRACE – SR W/ BUSHINGS [138]	1	
10	311613	BUSHING	2	
11	311611	TUBE – PIVOT REEL BRACE	1	
A	136310	BOLT – HEX HD M16 X 2 X 105-SPCL-8.8-AA1J		
B	184717	WASHER – FLAT REG M16-200HV-AA1J		
C	152520	NUT – HEX FLG TECH LK M16 X 2-10-AA1J		
D	152732	BOLT – RHSN M10 X 1.5 X 40-8.8-AA1J		
E	135799	NUT – HEX FLG CTR LOC M10 X 1.5-10		
F	320168	BOLT – HEX HD M16 X 2 X 125-8.8-AA1J		
G	136440	NUT – HEX FLG CTR LK M16 X 2-10-AA1J		
H	252581	BOLT – HEX HD M20 X 2.5 X 220-10.9-AA1J		
J	136701	WASHER – NORDLOCK M20		
K	136122	NUT – HEX FLG CTR LOC M20 X 2.5-10-AA1J		

135. Arm includes two reel entanglement hazard decals (MD #360541).
136. For RH cylinder (MD #273788), order seal kit (MD #323687); for LH cylinder (MD #273789), order seal kit (MD #323688).
137. To secure the RH cylinder to the right endsheet, use clevis pin (MD #18626); to secure the LH cylinder to the left endsheet, use clevis pin (MD #322970).
138. The brace includes two bushings (MD #311613).

45 Reel Support Arm and Lift Cylinders – Outer Arms, Double and Triple Reel

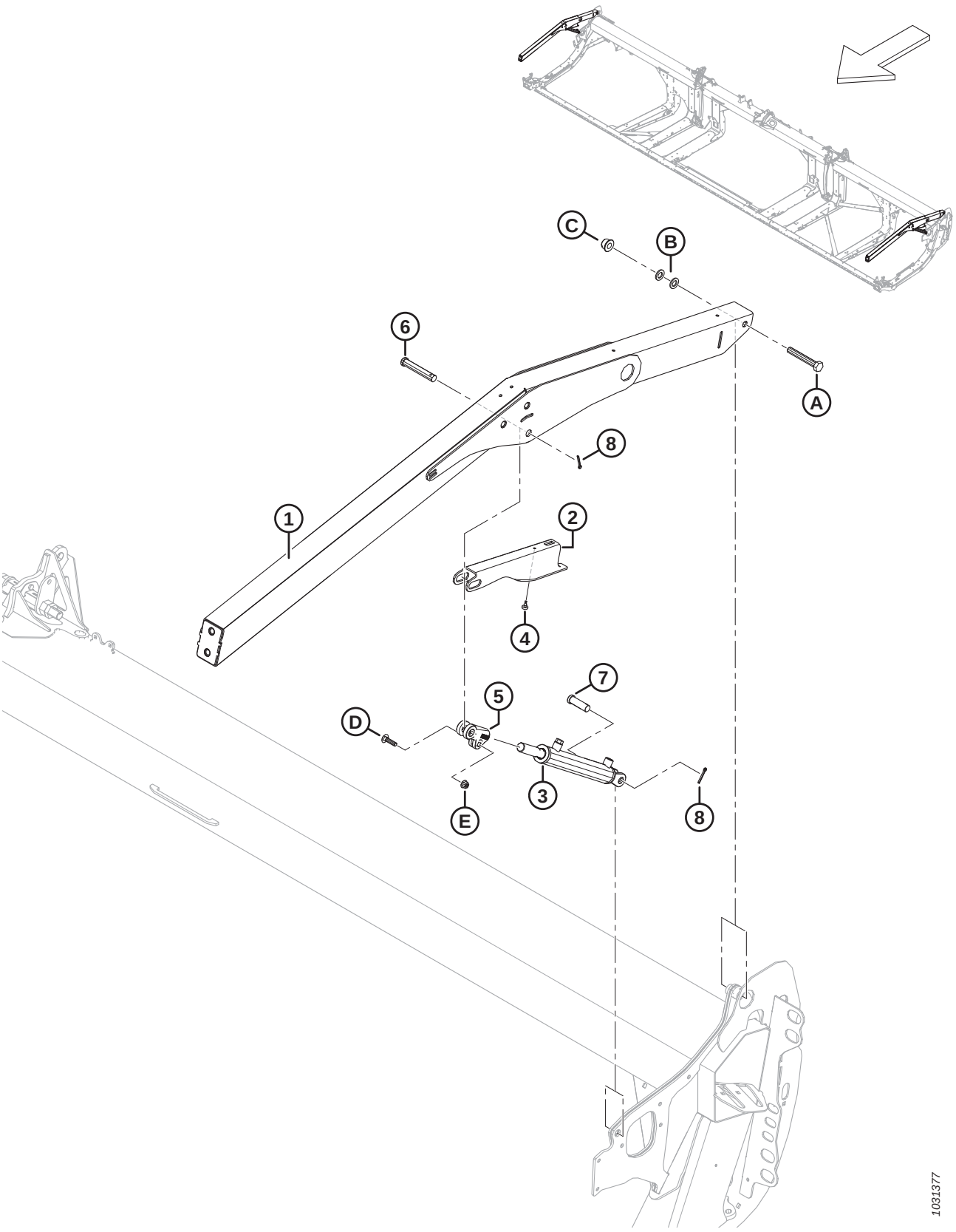

Ref	Part Number	Description	Qty	Serial Number
1	311949	ARM – OUTER W/ DECAL [139]	2	
2	340191	SUPPORT – REEL PROP	2	
3	273787	CYLINDER – HYD	2	
	311284	SEAL KIT		
	174879	BREATHER – ORB #6		
4	273653	BUMPER – RUBBER	2	
5	228338	CLEVIS – CYL END MACHINED	2	
6	18629	PIN – CLEVIS	2	
7	18626	PIN – CLEVIS	2	
8	18648	PIN – COTTER 3/16 DIA X 1.25 ZP	4	
A	136310	BOLT – HEX HD M16 X 2 X 105-SPCL-8.8-AA1J		
B	184717	WASHER – FLAT REG M16-200HV-AA1J		
C	152520	NUT – HEX FLG TECH LK M16 X 2-10-AA1J		
D	152732	BOLT – RHSN M10 X 1.5 X 40-8.8-AA1J		
E	135799	NUT – HEX FLG CTR LOC M10 X 1.5-10		

139. Arm includes two reel entanglement hazard decals (MD #360541).

46 Reel Arm Components – Right Arm, Single Reel (FD225)

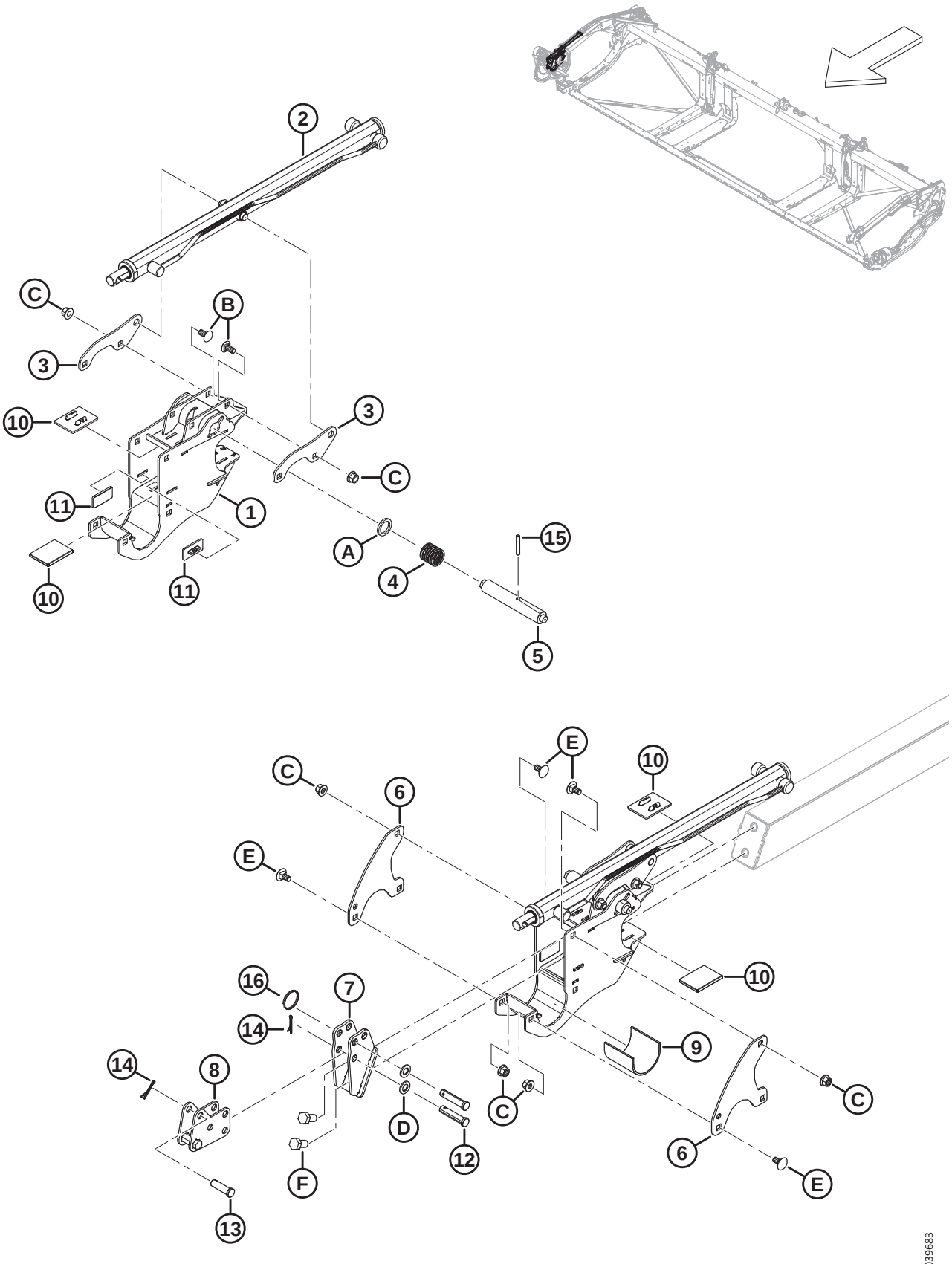

REEL ARM COMPONENTS – RIGHT ARM, SINGLE REEL (FD225)

Ref	Part Number	Description	Qty	Serial Number
1	340224	SUPPORT – REEL C/W DECAL	1	
2	273283	CYLINDER – FORE AFT [140]	1	
	313964	SEAL KIT		
3	273138	LUG	2	
4	273861	SPRING – COMP - LEFT HAND HELIX	1	
5	273278	PIN – CAM LATCH, DRIVES RH	1	
6	273122	PLATE – REEL RETAINER	2	
7	311237	SUPPORT – FRONT ANCHOR WELDT	1	
8	311238	ANCHOR – FORE AFT SUB WELDT	1	
9	228381	SLEEVE – REEL HUB SUPPORT	1	
10	273831	PAD – REEL DRIVE WEAR	4	
11	273777	PAD – REEL DRIVE WEAR	2	
12	18704	PIN – CLEVIS, 15 MM X 68 MM OAL	2	
13	18621	PIN – CLEVIS, 15 MM X 50 MM OAL	1	
14	18607	PIN – COTTER 5/32 DIA X 1.5 ZP	2	
15	16681	PIN – SPRING 5/16 DIA X 2.0 LG	1	
16	320207	RING – SPLIT	1	
A	273304	WASHER – CAM LATCH		
B	152439	BOLT – RHSSN M12 X 1.75 X 25-8.8-AA1J		
C	136431	NUT – HEX FLG CTR LOC M12 X 1.75-10		
D	184717	WASHER – FLAT REG M16-200HV-AA1J		
E	135903	BOLT – RHSN M12 X 1.75 X 25-8.8-ZINC		
F	136143	BOLT – HEX HD TFL M16 X 2 X 30-10.9-AA1J		

140. Right arm, single reel only.

47 Reel Arm Components – Right Arm, Double Reel (FD230, FD235, FD240, and FD241)

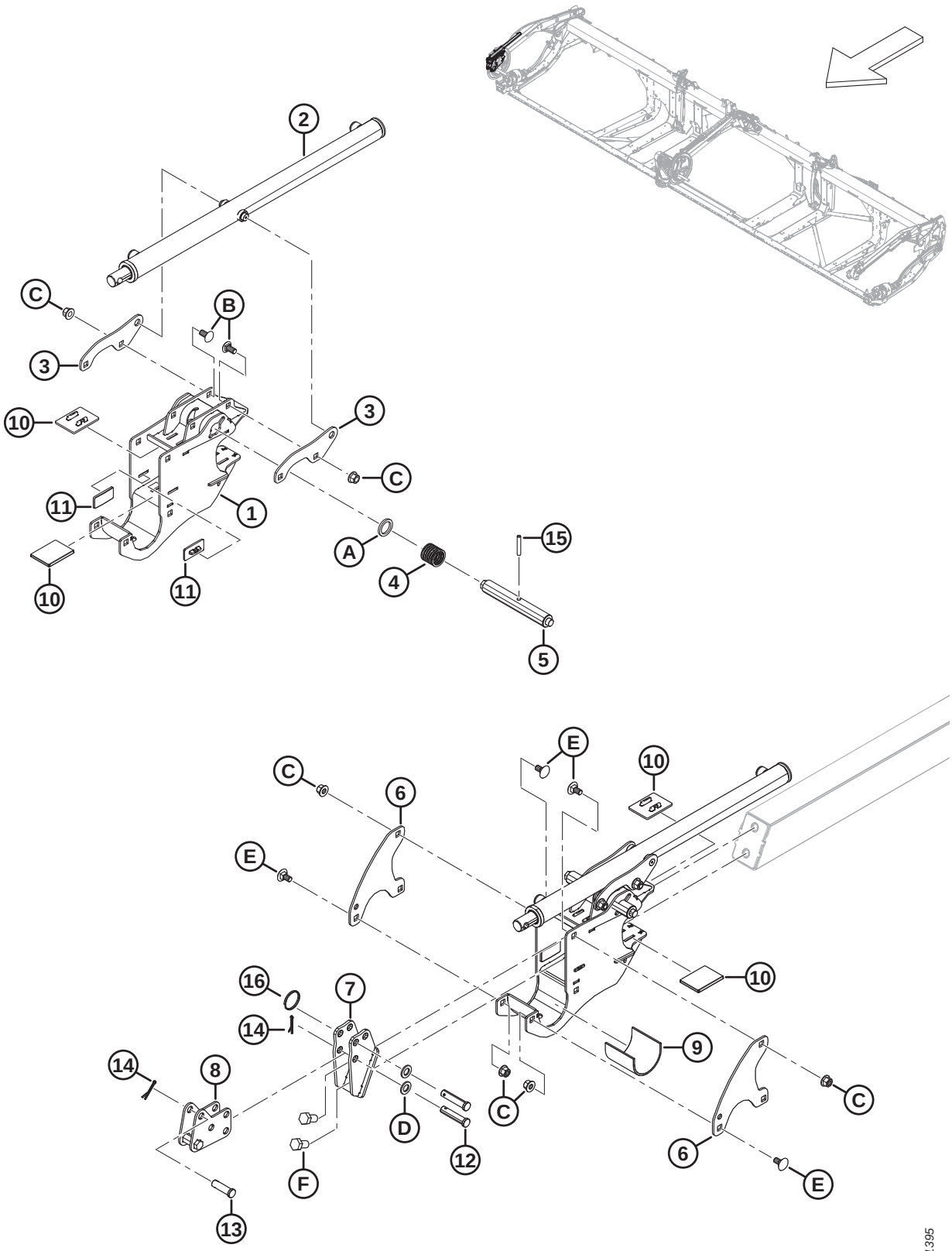

REEL ARM COMPONENTS – RIGHT ARM, DOUBLE REEL (FD230, FD235, FD240, AND FD241)

Ref	Part Number	Description	Qty	Serial Number
1	340224	SUPPORT – REEL CENTER C/W DECAL	1	
2	273284	CYLINDER – FORE AFT (RIGHT ARM ONLY)	1	
	313964	SEAL KIT		
3	273138	LUG	2	
4	273861	SPRING – COMP - LEFT HAND HELIX	1	
5	273281	PIN – CAM LATCH RH CAMS	1	
6	273122	PLATE – REEL RETAINER	2	
7	311237	SUPPORT – FRONT ANCHOR WELDT	1	
8	311238	ANCHOR – FORE AFT SUB WELDT	1	
9	228381	SLEEVE – REEL HUB SUPPORT	1	
10	273831	PAD – REEL DRIVE WEAR	4	
11	273777	PAD – REEL DRIVE WEAR	2	
12	18704	PIN – CLEVIS, 15 MM X 68 MM OAL	2	
13	18621	PIN – CLEVIS, 15 MM X 50 MM OAL	1	
14	18607	PIN – COTTER 5/32 DIA X 1.5 ZP	3	
15	16681	PIN – SPRING 5/16 DIA X 2.0 LG	1	
16	320207	RING – SPLIT	1	
A	273304	WASHER – CAM LATCH		
B	152439	BOLT – RHSSN M12 X 1.75 X 25-8.8-AA1J		
C	136431	NUT – HEX FLG CTR LOC M12 X 1.75-10		
D	184717	WASHER – FLAT REG M16-200HV-AA1J		
E	135903	BOLT – RHSN M12 X 1.75 X 25-8.8-ZINC		
F	136143	BOLT – HEX HD TFL M16 X 2 X 30-10.9-AA1J		

48 Reel Arm Components – Right Arm, Triple Reel (FD240, FD245, and FD250)

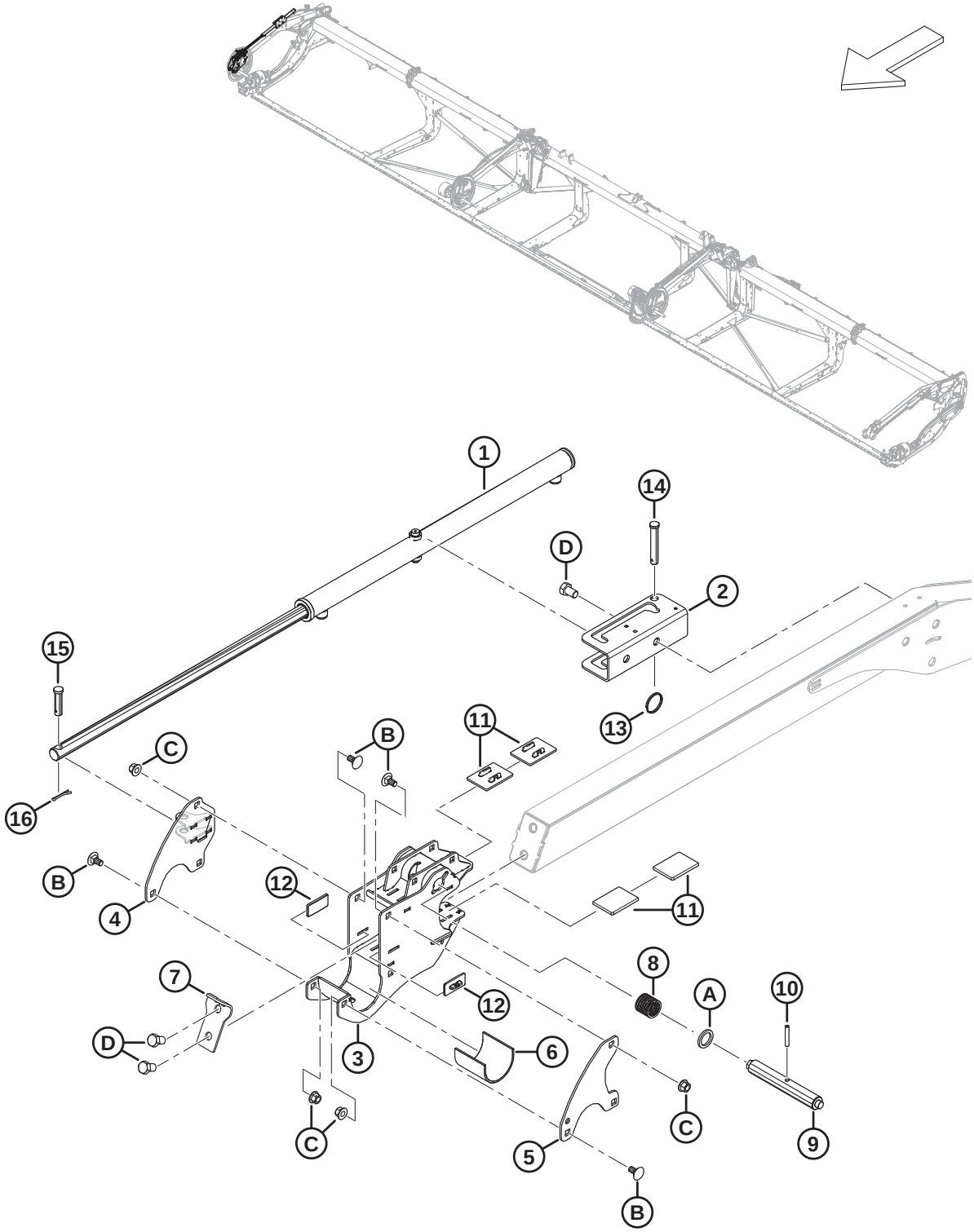

REEL ARM COMPONENTS – RIGHT ARM, TRIPLE REEL (FD240, FD245, AND FD250)

Ref	Part Number	Description	Qty	Serial Number
1	273284	CYLINDER – FORE AFT	1	
	313964	SEAL KIT		
2	273637	BRACKET – CYLINDER MOUNT	1	
3	340224	SUPPORT – REEL CENTER C/W DECAL	1	
4	340571	BRACKET WELDT – FORE AFT RH CAM	1	
5	273122	PLATE – REEL RETAINER	1	
6	228381	SLEEVE – REEL HUB SUPPORT	1	
7	311359	PLATE – STOP REEL	1	
8	273861	SPRING – COMP - LEFT HAND HELIX	1	
9	273281	PIN – CAM LATCH RH CAMS	1	
10	16681	PIN – SPRING 5/16 DIA X 2.0 LG	1	
11	273831	PAD – REEL DRIVE WEAR	4	
12	273777	PAD – REEL DRIVE WEAR	2	
13	320207	RING – SPLIT	1	
14	19958	PIN – CLEVIS	1	
15	103879	PIN – CLEVIS	1	
16	18607	PIN – COTTER 5/32 DIA X 1.5 ZP	1	
A	273304	WASHER – CAM LATCH		
B	135903	BOLT – RHSN M12 X 1.75 X 25-8.8-ZINC		
C	136431	NUT – HEX FLG CTR LOC M12 X 1.75-10		
D	136143	BOLT – HEX HD TFL M16 X 2 X 30-10.9-AA1J		

49 Reel Arm Components – Center Arm (FD230, FD235, FD240, FD241, FD245, and FD250)

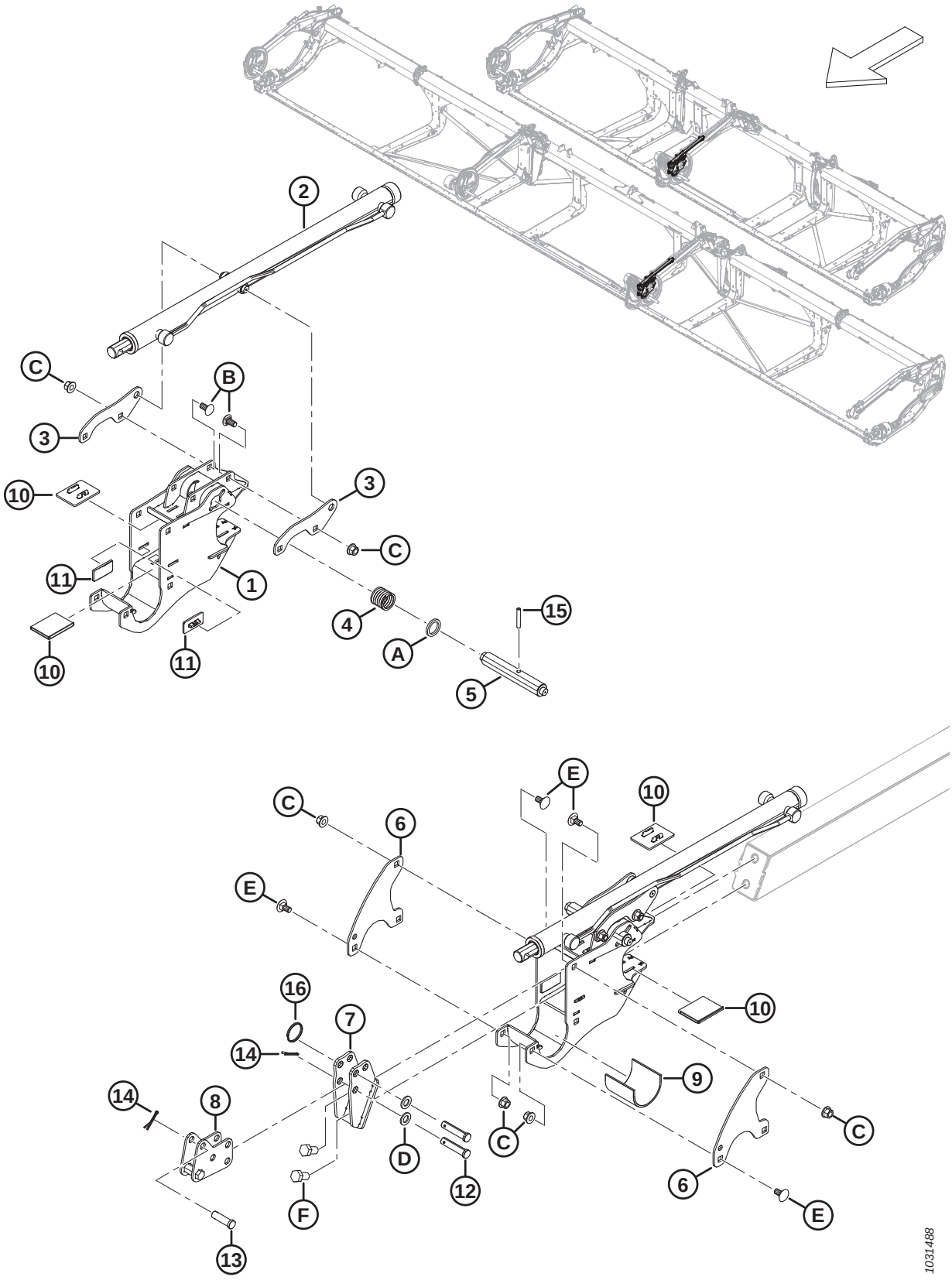

REEL ARM COMPONENTS – CENTER ARM (FD230, FD235, FD240, FD241, FD245, AND FD250)

Ref	Part Number	Description	Qty	Serial Number
1	340224	SUPPORT – REEL CENTER C/W DECAL	1	
2	273283	CYLINDER – FORE AFT	1	
	313964	SEAL KIT		
3	273138	LUG	2	
4	273861	SPRING – COMP - LEFT HAND HELIX	1	
5	273278	PIN – CAM LATCH-DRIVES AND RH CTR	1	
6	273122	PLATE – REEL RETAINER	2	
7	311237	SUPPORT – FRONT ANCHOR WELDT	1	
8	311238	ANCHOR – FORE AFT SUB WELDT	1	
9	228381	SLEEVE – REEL HUB SUPPORT	1	
10	273831	PAD – REEL DRIVE WEAR	4	
11	273777	PAD – REEL DRIVE WEAR	2	
12	18704	PIN – CLEVIS, 15 MM X 68 MM OAL	2	
13	18621	PIN – CLEVIS, 15 MM X 50 MM OAL	1	
14	18607	PIN – COTTER 5/32 DIA X 1.5 ZP	3	
15	16681	PIN – SPRING 5/16 DIA X 2.0 LG	1	
16	320207	RING – SPLIT	1	
A	273304	WASHER – CAM LATCH		
B	152439	BOLT – RHSSN M12 X 1.75 X 25-8.8-AA1J		
C	136431	NUT – HEX FLG CTR LOC M12 X 1.75-10		
D	184717	WASHER – FLAT REG M16-200HV-AA1J		
E	135903	BOLT – RHSN M12 X 1.75 X 25-8.8-ZINC		
F	136143	BOLT – HEX HD TFL M16 X 2 X 30-10.9-AA1J		

50 Reel Arm Components – Center Right Arm, Triple Reel (FD240, FD245, and FD250)

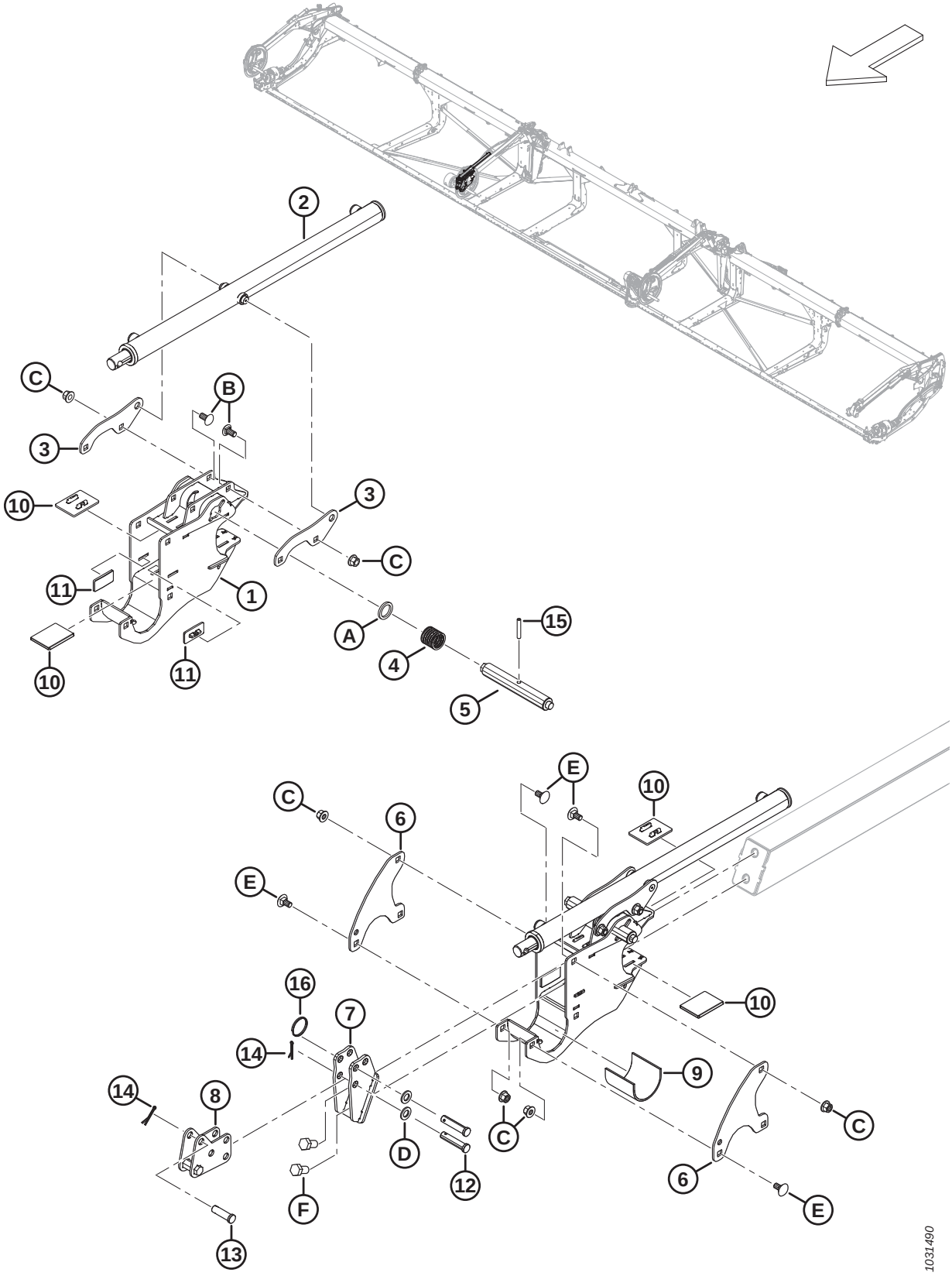

REEL ARM COMPONENTS – CENTER RIGHT ARM, TRIPLE REEL (FD240, FD245, AND FD250)

Ref	Part Number	Description	Qty	Serial Number
1	340224	SUPPORT – REEL CENTER C/W DECAL	1	
2	273284	CYLINDER – FORE AFT	1	
	313964	SEAL KIT		
3	273138	LUG	2	
4	273861	SPRING – COMP - LEFT HAND HELIX	1	
5	273278	PIN – CAM LATCH-DRIVES AND RH CTR	1	
6	273122	PLATE – REEL RETAINER	2	
7	311237	SUPPORT – FRONT ANCHOR WELDT	1	
8	311238	ANCHOR – FORE AFT SUB WELDT	1	
9	228381	SLEEVE – REEL HUB SUPPORT	1	
10	273831	PAD – REEL DRIVE WEAR	4	
11	273777	PAD – REEL DRIVE WEAR	2	
12	18704	PIN – CLEVIS, 15 MM X 68 MM OAL	2	
13	18621	PIN – CLEVIS, 15 MM X 50 MM OAL	1	
14	18607	PIN – COTTER 5/32 DIA X 1.5 ZP	3	
15	16681	PIN – SPRING 5/16 DIA X 2.0 LG	1	
16	320207	RING – SPLIT	1	
A	273304	WASHER – CAM LATCH		
B	152439	BOLT – RHSSN M12 X 1.75 X 25-8.8-AA1J		
C	136431	NUT – HEX FLG CTR LOC M12 X 1.75-10		
D	184717	WASHER – FLAT REG M16-200HV-AA1J		
E	135903	BOLT – RHSN M12 X 1.75 X 25-8.8-ZINC		
F	136143	BOLT – HEX HD TFL M16 X 2 X 30-10.9-AA1J		

51 Reel Arm Components – Left Arm (FD225, FD230, FD235, FD240, FD241, FD245, and FD250)

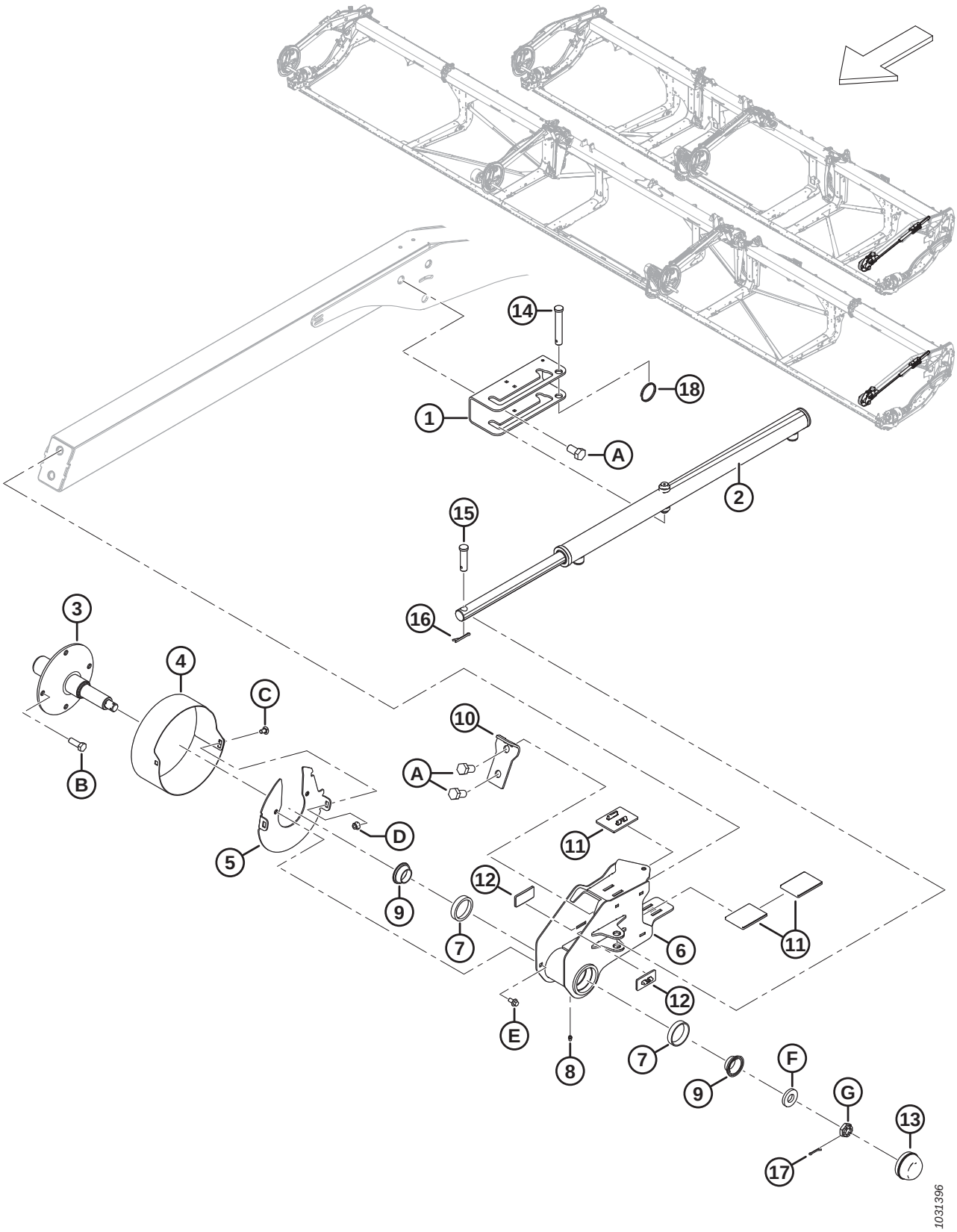

REEL ARM COMPONENTS – LEFT ARM (FD225, FD230, FD235, FD240, FD241, FD245, AND FD250)

Ref	Part Number	Description	Qty	Serial Number
1	273637	BRACKET – CYLINDER MOUNT	1	
2	273284	CYLINDER – FORE AFT	1	
	313964	SEAL KIT		
3	228322	SHAFT – TAIL MACHINED	1	
4	273309	SHIELD – LH REEL TAIL END	1	
5	311632	DISC – WELDMENT	1	
6	273772	TAIL END REEL SUPPORT – C/W CUPS [141]	1	
7	164215	BEARING – CUP ROLLER	2	
8	18671	FITTING – LUBE 1/4 - 28 UNF	1	
9	164216	BEARING – CONE C/W SEAL	2	
10	311359	PLATE – STOP REEL	1	
11	273831	PAD – REEL DRIVE WEAR	3	
12	273777	PAD – REEL DRIVE WEAR	2	
13	30520	CAP – DUST	1	
14	19958	PIN – CLEVIS	1	
15	103879	PIN – CLEVIS	1	
16	18607	PIN – COTTER 5/32 DIA X 1.5 ZP	2	
17	18605	PIN – COTTER 1/8 DIA X 1 ZP	1	
18	320207	RING – SPLIT	1	
A	136143	BOLT – HEX HD TFL M16 X 2 X 30-10.9-AA1J		
B	152730	BOLT – HEX HD TFL M12 X 1.75 X 35-10.9-AA1J		
C	191489	BOLT – RHSSN TFL M8 X 1.25 X 16-8.8-AA1J		
D	135337	NUT – HEX FLG CTR LK M8 X 1.25-8-AA1J		
E	136485	BOLT – HEX FLG HD TFL M8 X 1.25 X 16-8.8-AA1J		
F	16235	WASHER – FLAT		
G	136445	NUT – HEX SLTD FINE M20 X 1.5-SPCL-22HA-ZINC		

141. The tail end reel support includes lube fitting (MD #18671) and two cup roller bearings (MD #164215).

52 Reel – Drive, Right Arm, Single Reel

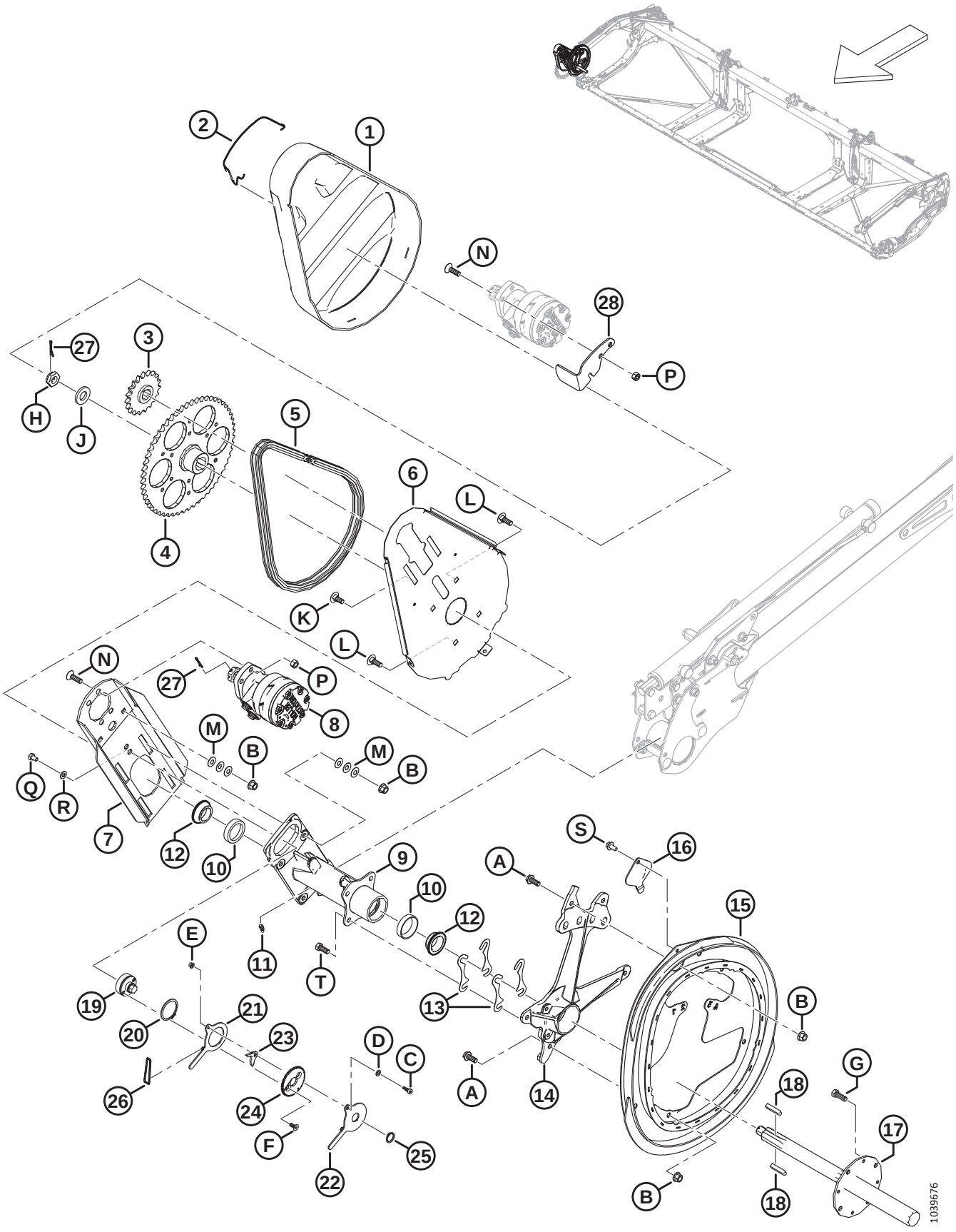

Ref	Part Number	Description	Qty	Serial Number
1	228614	COVER – REEL DRIVE SR	1	
2	228611	SPRING – REEL DRIVE COVER	1	
3	273875	SPROCKET – RC 60, 19 TOOTH	1	
4	228299	SPROCKET – MACHINING 56 TOOTH	1	
5	273907	CHAIN – RC 60 ENDLESS 76 LINKS	1	
	273963	CHAIN – RC C/W CONNECTOR 76 LINKS	OPT	
6	228604	SUPPORT – REEL DRIVE BACKPLATE	1	
7	360144	PLATE – MOTOR MOUNT W/ GRAPHITE	1	
8	273258	MOTOR – HYD-15.9 CU.IN. 506 SERIES [142]	1	
	273259	SEAL KIT [143]		
	273078	MOTOR – HYD-260 CC HIGH CAPACITY BEARING [144]	OPT	
	311620	SEAL KIT [145]		
	137375	NUT – SLTD JAM 1.0-20 UNEF		
9	273758	HUB – REEL DRIVE [146]	1	
10	164214	BEARING – CUP	2	
11	21301	FITTING – LUBRICATION	1	
12	164213	BEARING – CONE C/W SEAL	2	
13	164061	SHIM – HUB TO CAM	4	
14	228292	SUPPORT – CAM MACHINING	1	
15	273926	CAM – WELDMENT	1	
16	137476	COVER – CAM BEARING ACCESS	1	
17	228301	SHAFT – REEL DRIVE MACHINED	1	
18	137721	KEY – REEL DRIVE SHAFT	2	
19	228460	TIGHTENER – CHAIN	1	
20	111521	RING – RETAINING	1	
21	228478	ARM – INNER	1	
22	228479	ARM – OUTER	1	
23	228485	LATCH	1	
24	228477	DISC – LOCK	1	
25	191353	RING – RETAINING EXTERNAL	1	
26	136882	O-RING – 3.5 X 40.5	1	
27	18607	PIN – COTTER 5/32 DIA X 1.5 ZP	2	
28	360186	RETAINER – COVER	1	
A	320180	BOLT – HEX FLG HD M12 X 1.75 X 30-SPCL-8.8-AA1J		
B	136431	NUT – HEX FLG CTR LOC M12 X 1.75-10		
C	197135	SCREW – HEX SOC HD SHLDR M8 X 10		
D	184708	WASHER – FLAT M8-200HV-AA1J		
E	152668	NUT – HEX FLG CTR LOC M6 X 1-8		
F	136592	SCREW – HEX SOC CSK HD TFL M8 X 1.25 X 20-8.8-ZINC		

142. Standard factory-installed motor.
143. Seal kit for standard motor (MD #273258).
144. Optional high capacity motor for high reel loads.
145. Seal kit for optional high capacity motor (MD #273078).
146. Hub includes two cup bearings (MD #164214) and lubrication fitting (MD #21301).

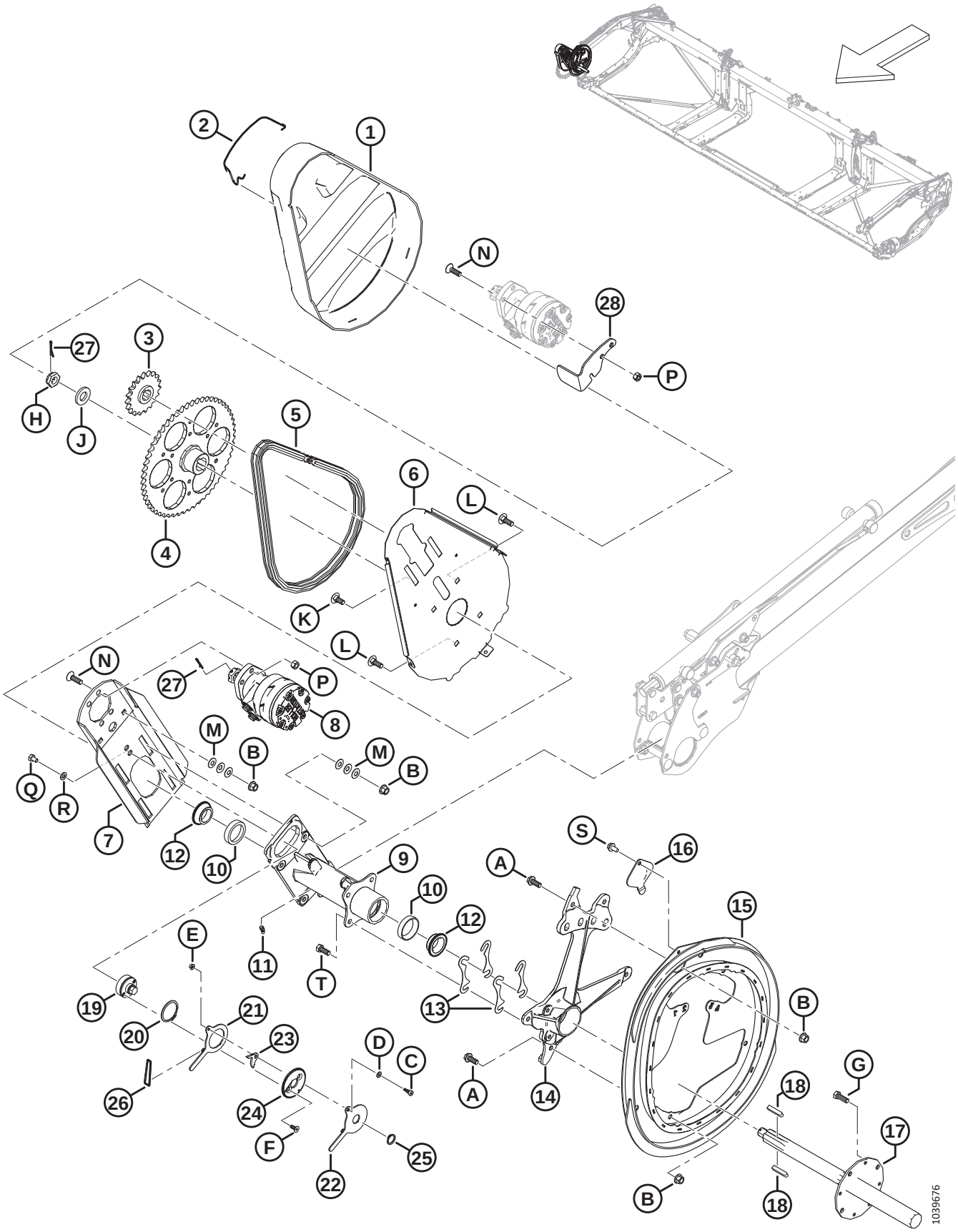
1039676

Ref	Part Number	Description	Qty	Serial Number
G	152730	BOLT – HEX HD TFL M12 X 1.75 X 35-10.9-AA1J		
H	136446	NUT – HEX SLTD FINE M24 X 1.5-SPCL-22HA-ZINC		
J	31774	WASHER – FLAT 1-1/8-30HRC-AC0C		
K	184667	BOLT – RHSN M12 X 1.75 X 30-8.8-ZINC		
L	136291	BOLT – RHSN TFL M12 X 1.75 X 35-8.8-ZINC		
M	136702	WASHER – CON SPRING M12-ZINC		
N	136401	SCREW – CSK HEX SOC M12 X 1.75 X 40-10.9-AA1J		
P	136759	NUT – HEX CTR LOC M12 X 1.75-8-AA1J		
Q	136842	BOLT – HEX HD TFL M10 X 1.5 X 16-8.8-ZINC		
R	30655	WASHER – HARD M10-340HV-AB0C		
S	136209	SCREW – HEX WSHR M10 X 1.5X20-450HV		
T	30630	BOLT – HEX HD TFL M12 X 1.75 X 30-8.8-A3L		

53 Reel – Drive, Center Arm, Double Reel and Triple Reel

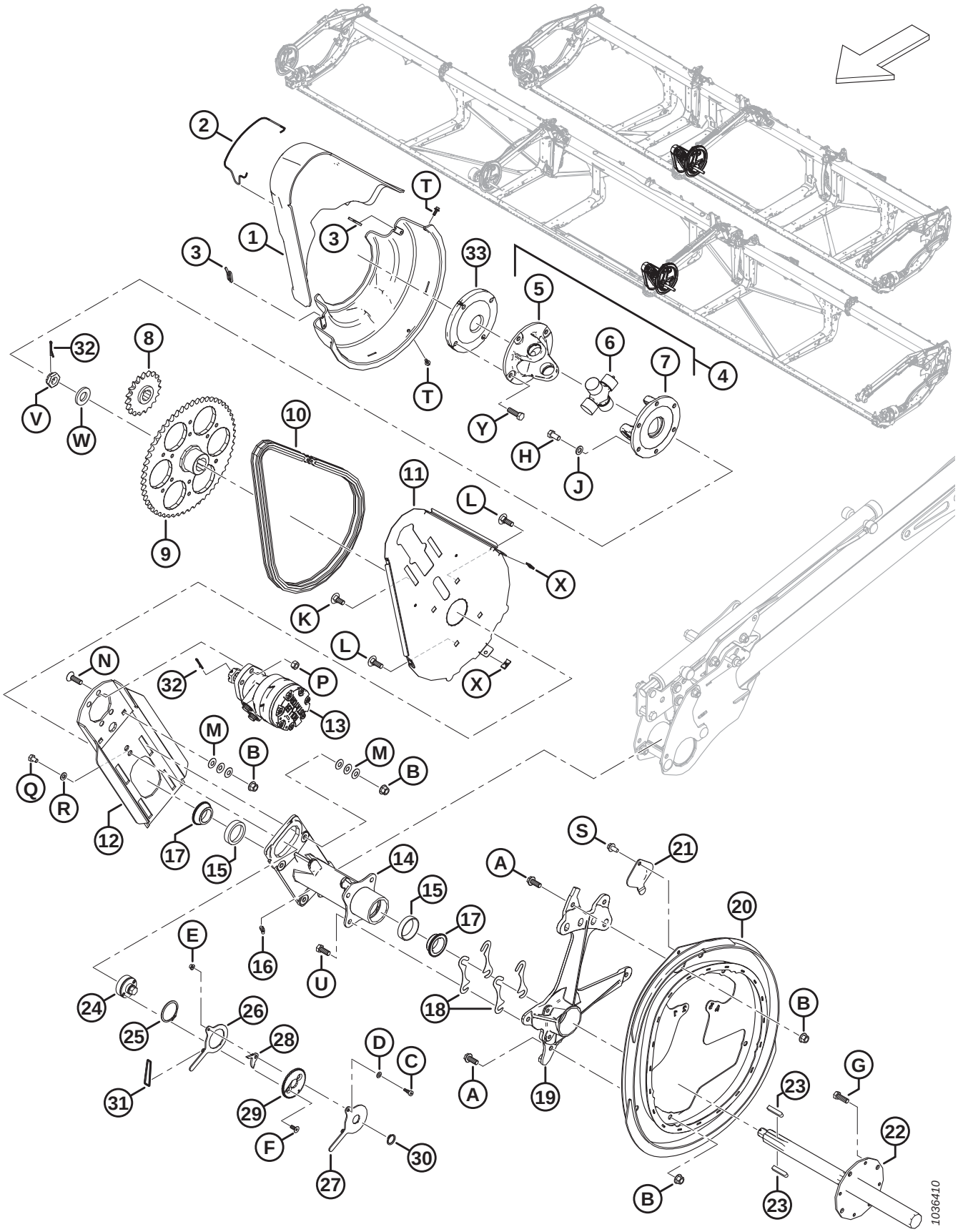

Ref	Part Number	Description	Qty	Serial Number
1	228619	COVER SET – CENTER REEL DRIVE [147]	1	
2	228611	SPRING – REEL DRIVE COVER	1	
3	228848	CLIP – COVER DUAL REEL DRIVE	2	
4	228382	REEL DRIVE U-JOINT [148]	1	
5	228384	YOKE – FLANGE 4 BOLT	1	
6	137825	CROSS JOURNAL ASSEMBLY	1	
7	228385	YOKE – FLANGE 6 BOLT	1	
8	273875	SPROCKET – RC 60, 19 TOOTH	1	
9	228299	SPROCKET – MACHINING 56 TOOTH	1	
10	273907	CHAIN – RC 60 ENDLESS 76 LINKS	1	
	273963	CHAIN – RC C/W CONNECTOR 76 LINKS	OPT	
11	228604	SUPPORT – REEL DRIVE BACKPLATE	1	
12	340216	PLATE – MOTOR MOUNT W/ GRAPHITE	1	
13	273258	MOTOR – HYD-15.9 CU.IN. 506 SERIES [149]	1	
	273259	SEAL KIT [150]		
	273078	MOTOR – HYD-260 CC HIGH CAPACITY BEARING [151]	OPT	
	311620	SEAL KIT [152]		
	137375	NUT – SLTD JAM 1.0-20 UNEF		
14	273758	HUB – REEL DRIVE [153]	1	
15	164214	BEARING – CUP	2	
16	21301	FITTING – LUBRICATION	1	
17	164213	BEARING – CONE C/W SEAL	2	
18	164061	SHIM – HUB TO CAM	4	
19	228292	SUPPORT – CAM MACHINING	1	
20	273926	CAM – WELDMENT	1	
21	137476	COVER – CAM BEARING ACCESS	1	
22	228301	SHAFT – REEL DRIVE MACHINED	1	
23	137721	KEY – REEL DRIVE SHAFT	2	
24	228460	TIGHTENER – CHAIN	1	
25	111521	RING – RETAINING	1	
26	228478	ARM – INNER	1	
27	228479	ARM – OUTER	1	
28	228485	LATCH	1	
29	228477	DISC – LOCK	1	
30	191353	RING – RETAINING EXTERNAL	1	
31	136882	O-RING – 3.5 X 40.5	1	
32	18607	PIN – COTTER 5/32 DIA X 1.5 ZP	2	

147. Set includes upper and lower drive reel covers.
148. U-joint includes cross journal assembly (MD #137825), four bolt flange yoke (MD #228384), and six bolt flange yoke (MD #228385).
149. Standard factory-installed motor.
150. Seal kit for standard motor (MD #273258).
151. Optional high capacity motor for high reel loads.
152. Seal kit for optional high capacity motor (MD #273078).
153. Hub includes two cup bearings (MD #164214) and lubrication fitting (MD #21301).

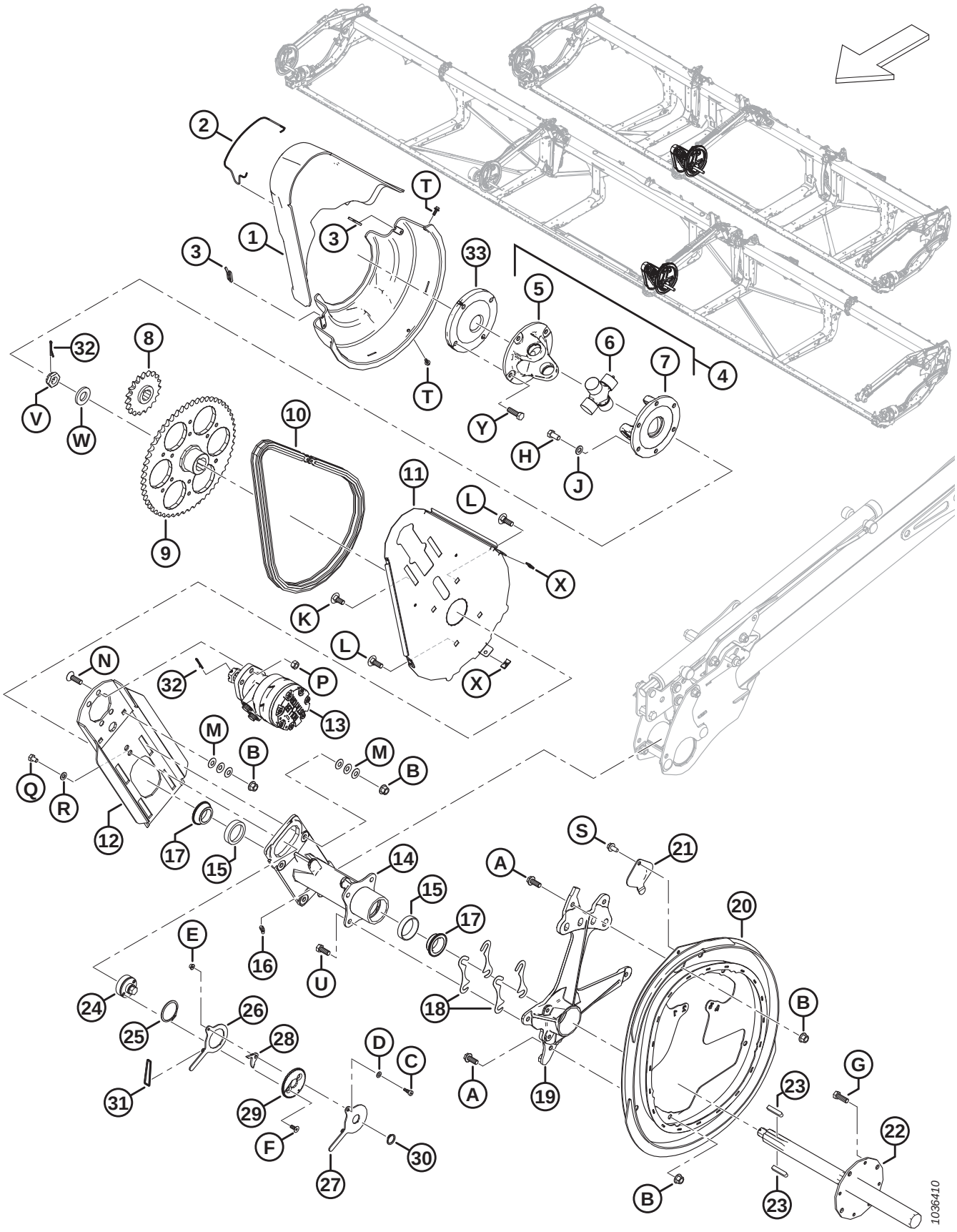
1036410

Ref	Part Number	Description	Qty	Serial Number
33	273576	DISC – SHIM TRIPLE REEL [154]	1	
A	320180	BOLT – HEX FLG HD M12 X 1.75 X 30-SPCL-8.8-AA1J		
B	136431	NUT – HEX FLG CTR LOC M12 X 1.75-10		
C	197135	SCREW – HEX SOC HD SHLDR M8 X 10		
D	184708	WASHER – FLAT M8-200HV-AA1J		
E	152668	NUT – HEX FLG CTR LOC M6 X 1-8		
F	136592	SCREW – HEX SOC CSK HD TFL M8 X 1.25 X 20-8.8-ZINC		
G	152730	BOLT – HEX HD TFL M12 X 1.75 X 35-10.9-AA1J		
H	50155	BOLT – HEX HD TFL M12 X 1.75 X 25-8.8-AA1J		
J	184714	WASHER – FLAT REG M12-300HV		
K	184667	BOLT – RHSN M12 X 1.75 X 30-8.8-ZINC		
L	136291	BOLT – RHSN TFL M12 X 1.75 X 35-8.8-ZINC		
M	136702	WASHER – CON SPRING M12-ZINC		
N	136401	SCREW – CSK HEX SOC M12 X 1.75 X 40-10.9-AA1J		
P	136759	NUT – HEX CTR LOC M12 X 1.75-8-AA1J		
Q	136842	BOLT – HEX HD TFL M10 X 1.5 X 16-8.8-ZINC		
R	30655	WASHER – HARD M10-340HV-AB0C		
S	136209	SCREW – HEX WSHR M10 X 1.5X20-450HV		
T	135959	BOLT – HEX FLG HD M6 X 1 X 16-10.9-AA1J		
U	30630	BOLT – HEX HD TFL M12 X 1.75 X 30-8.8-A3L		
V	136446	NUT – HEX SLTD FINE M24 X 1.5-SPCL-22HA-ZINC		
W	31774	WASHER – FLAT 1-1/8-30HRC-AC0C		
X	136443	NUT – SPRING "U" TYPE M6 X 1		
Y	152730	BOLT – HEX HD TFL M12 X 1.75 X 35-10.9-AA1J [155]		
	184669	BOLT – HEX HD M12 X 1.75 X 40-8.8-AA1J [154]		

154. Triple-reel headers only.
155. Double-reel headers only.

54 Reel – Cam Components, Right Arm

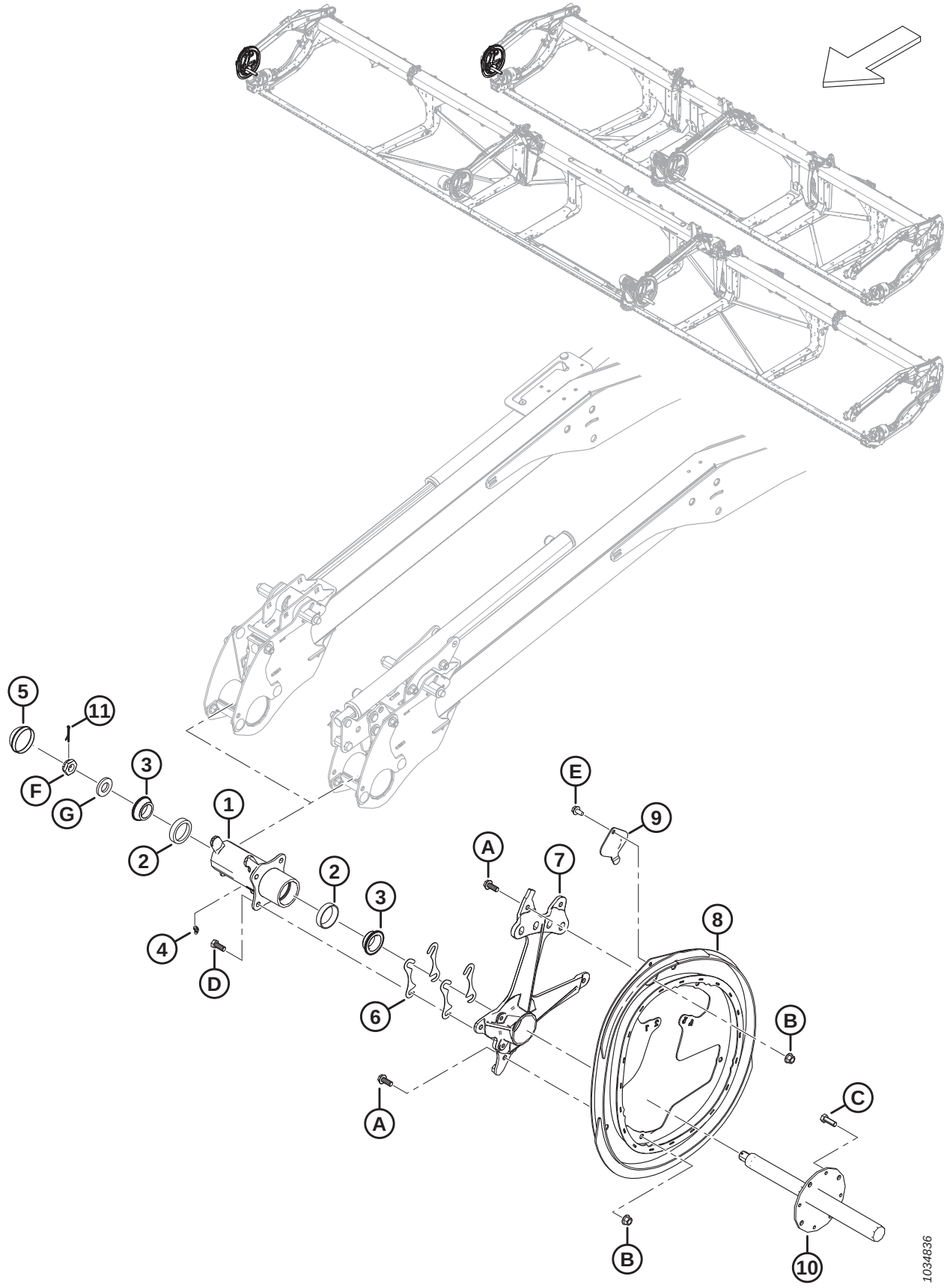

REEL – CAM COMPONENTS, RIGHT ARM

Ref	Part Number	Description	Qty	Serial Number
1	273759	HUB ASSEMBLY – RH CAM [156]	1	
2	164214	BEARING – CUP	2	
3	164213	BEARING – CONE C/W SEAL	2	
4	21301	FITTING – LUBRICATION	1	
5	140250	CAP – DUST	1	
6	164061	SHIM – HUB TO CAM	4	
7	228292	SUPPORT – CAM MACHINING	1	
8	273926	CAM – WELDMENT	1	
9	137476	COVER – CAM BEARING ACCESS	1	
10	228302	SHAFT – MACHINED RH REEL	1	
11	18607	PIN – COTTER 5/32 DIA X 1.5 ZP	1	
A	320180	BOLT – HEX FLG HD M12 X 1.75 X 30-SPCL-8.8-AA1J		
B	136431	NUT – HEX FLG CTR LOC M12 X 1.75-10		
C	152730	BOLT – HEX HD TFL M12 X 1.75 X 35-10.9-AA1J		
D	30630	BOLT – HEX HD TFL M12 X 1.75 X 30-8.8-A3L		
E	136209	SCREW – HEX WSHR M10 X 1.5 X 20-450HV		
F	136446	NUT – HEX SLTD FINE M24 X 1.5-SPCL-22HA-ZINC		
G	31774	WASHER – FLAT 1-1/8-30 HRC-AC0C		

156. The hub assembly includes two bearing cups (MD #164214) and lubrication fitting (MD #21301).

55 Reel – Cam Components, Center Right Arm, Triple Reel (FD240, FD245, and FD250)

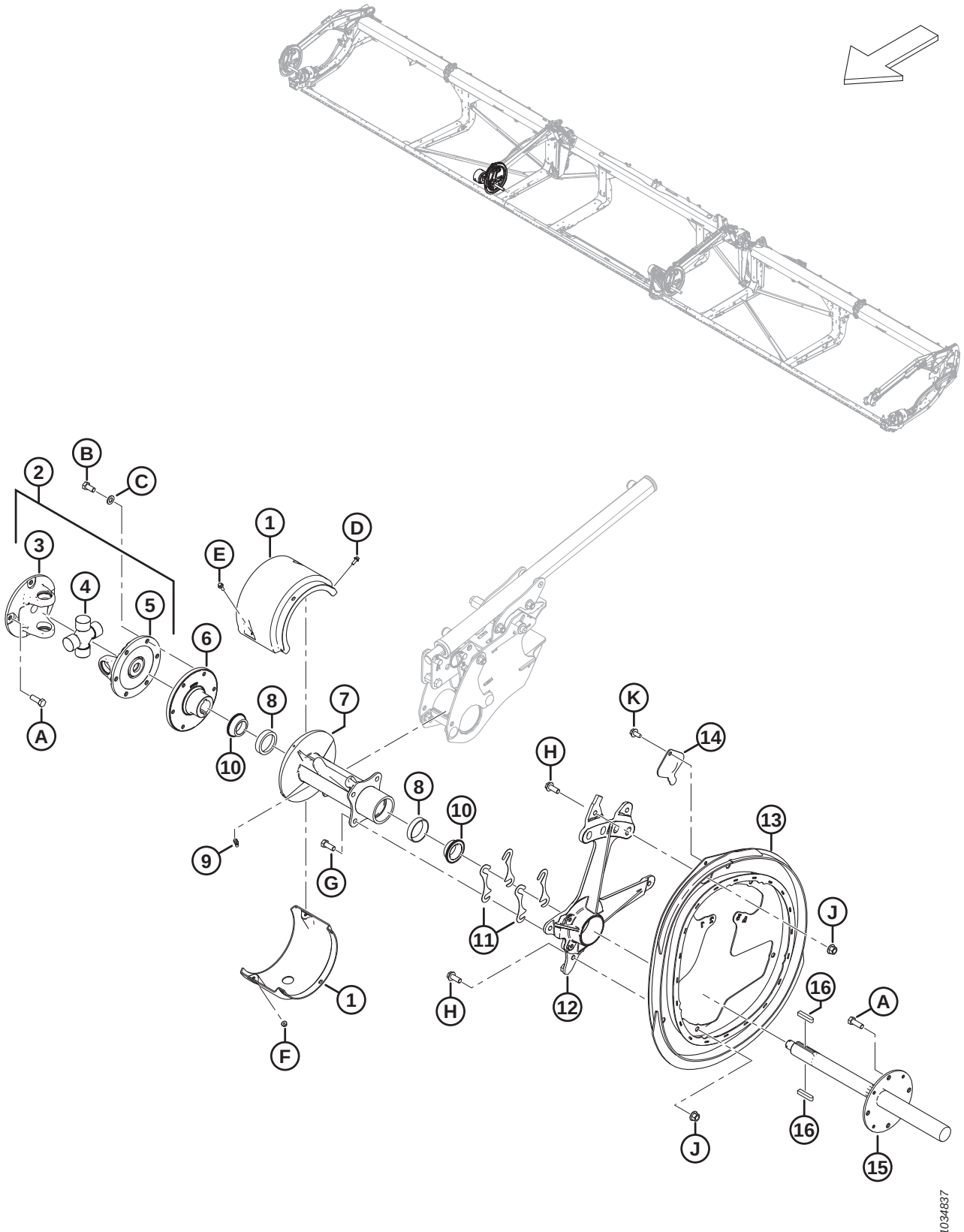

REEL – CAM COMPONENTS, CENTER RIGHT ARM, TRIPLE REEL (FD240, FD245, AND FD250)

Ref	Part Number	Description	Qty	Serial Number
1	311724	COVER SET – TRIPLE REEL [157]	1	
2	228382	REEL DRIVE U-JOINT [158]	1	
3	228384	YOKE – FLANGE 4 BOLT	1	
4	137825	CROSS JOURNAL ASSEMBLY	1	
5	228385	YOKE – FLANGE 6 BOLT	1	
6	273770	HUB – MACHINING U-JOINT MT-TR	1	
7	273760	HUB – TRC W/ BEARING CUPS [159]	1	
8	164214	BEARING – CUP	2	
9	21301	FITTING – LUBRICATION	1	
10	164213	BEARING – CONE C/W SEAL	2	
11	164061	SHIM – HUB TO CAM	4	
12	228292	SUPPORT – CAM MACHINING	1	
13	273926	CAM – WELDMENT	1	
14	137476	COVER – CAM BEARING ACCESS	1	
15	228301	SHAFT – REEL DRIVE MACHINED	1	
16	137721	KEY – REEL DRIVE SHAFT	2	
A	152730	BOLT – HEX HD TFL M12 X 1.75 X 35-10.9-AA1J		
B	50155	BOLT – HEX HD TFL M12 X 1.75 X 25-8.8-AA1J		
C	184714	WASHER – FLAT REG M12-300HV		
D	252639	BOLT – HEX FLG HD M6 X 1 X 16 X SPCL-8.8-AA2L		
E	136324	BOLT – HEX FLG HD TFL M6 X 1 X 20-10.9-AA1J		
F	152668	NUT – HEX FLG CTR LOC M6 X 1-8		
G	30630	BOLT – HEX HD TFL M12 X 1.75 X 30-8.8-A3L		
H	320180	BOLT – HEX FLG HD M12 X 1.75 X 30-SPCL-8.8-AA1J		
J	136431	NUT – HEX FLG CTR LOC M12 X 1.75-10		
K	136209	SCREW – HEX WSHR M10 X 1.5 X 20-450HV		

157. Set includes top and bottom triple-reel covers.
158. U-joint includes cross journal assembly (MD #137825), four bolt flange yoke (MD #228384), and six bolt flange yoke (MD #228385).
159. Hub includes two bearing cups (MD #164214) and lubrication fitting (MD #21301).

56 Reel – Tine Tube

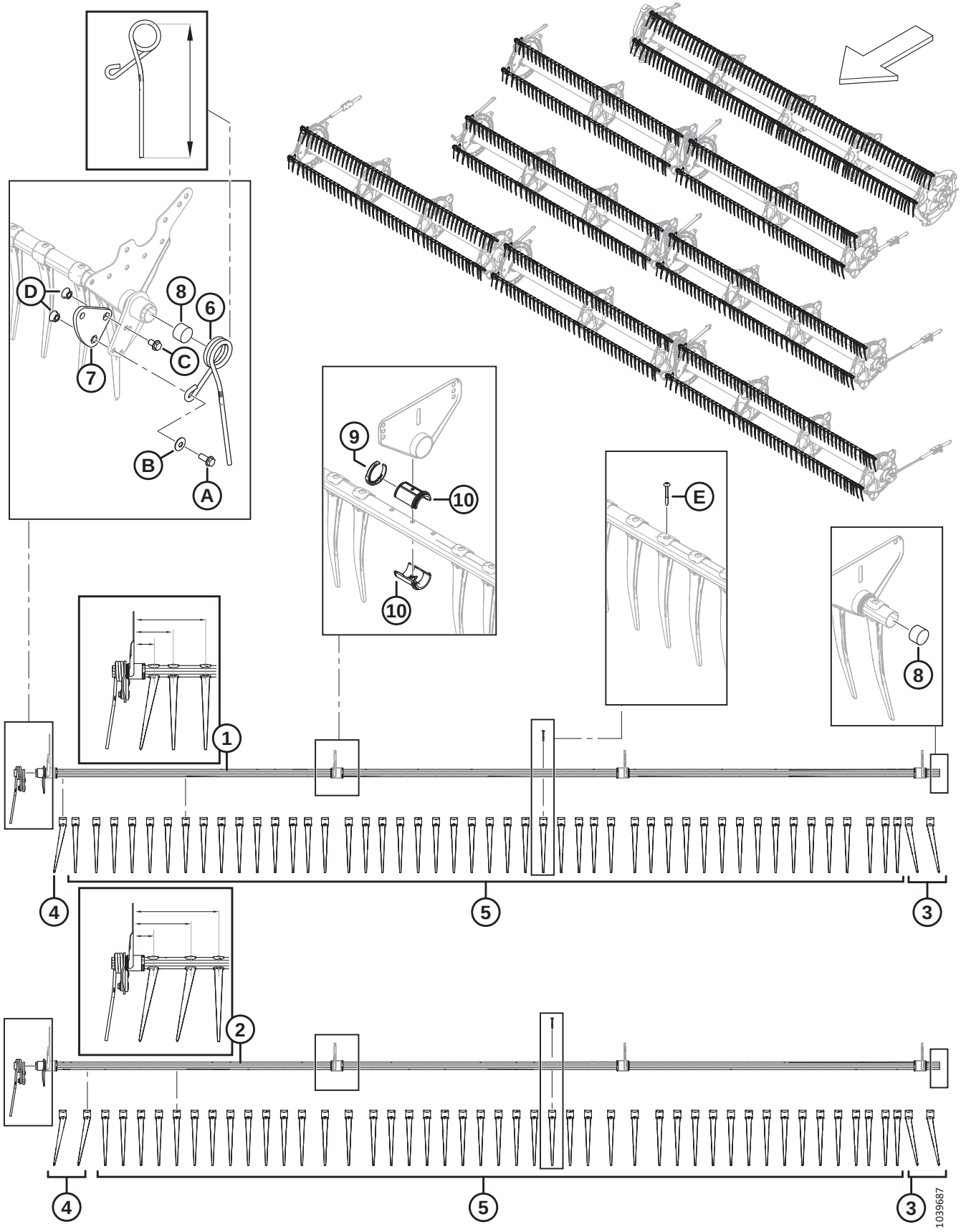

NOTE:

Finger configuration varies for narrow or wide and left, right, and center tine tubes.

Ref	Part Number	Description	Qty	Serial Number
1	**360201**	**TINE TUBE WELDT – 25 FT SR NARROW** [160]	**3**	
	311368	TINE TUBE WELDT – 30 FT DR NARROW [160]	6	
	311207	TINE TUBE WELDT – 35 FT DR NARROW [160]	6	
	311190	TINE TUBE WELDT – 40 FT DR NARROW [160]	6	
	311303	TINE TUBE WELDT – 41 FT DR NARROW [160]	6	
	311408	TINE TUBE WELDT – 40 FT TR AND 45 FT TR NARROW [160]	6	
	311745	TINE TUBE WELDT – 40 FT TR NARROW (CENTER) [160]	3	
	311675	TINE TUBE WELDT – 50 FT TR NARROW [160]	6	
	311408	TINE TUBE WELDT – 45 FT TR AND 50 FT TR NARROW (CENTER) [160]	3	
2	**360199**	**TINE TUBE WELDT – 25 FT SR WIDE** [160]	**2**	
	311365	TINE TUBE WELDT – 30 FT DR WIDE [160]	4	
	311210	TINE TUBE WELDT – 35 FT DR WIDE [160]	4	
	311193	TINE TUBE WELDT – 40 FT DR WIDE [160]	4	
	311306	TINE TUBE WELDT – 41 FT DR WIDE [160]	4	
	311405	TINE TUBE WELDT – 40 FT TR AND 45 FT TR WIDE [160]	4	
	311746	TINE TUBE WELDT – 40 FT TR WIDE (CENTER) [160]	2	
	311676	TINE TUBE WELDT – 50 FT TR WIDE [160]	4	
	311405	TINE TUBE WELDT – 45 FT TR AND 50 FT TR WIDE (CENTER) [160]	2	
3	**360540**	**FINGER – PLASTIC, LH ANGLED (10 PACK)**	**A/R**	
4	311523	FINGER – PLASTIC, RH ANGLED (10 PACK)	A/R	
5	174849	FINGER – PLASTIC, STRAIGHT (10 PACK) [161]		
6	311327	FINGER – CAM END BENT, LH REEL (315 MM LG) [162]	1	
	311325	FINGER – CAM END OUTBOARD, RH REEL (305 MM LG) [162]	1	
7	228319	ARM – CRANK MACHINING **(SR, DR)** [163]	1	
	273877	ARM – CRANK MACHINING **(TR)** [164]	1	
8	137980	PLUG – TINE TUBE	2	
9	220941	CLAMP – TINE TUBE BUSHING, CENTER RIB (5 PACK)	A/R	
10	220939	TINE TUBE BUSHING (25 PACK)	A/R	

160. Narrow or wide tine tubes can be distinguished from the first three fingers of the RH side. Narrow tine tubes have one RH angled finger (MD #311523) followed by two straight fingers (MD #174849) and measure 76 mm, 146 mm, and 265 mm as illustrated. Wide tine tubes have two RH angled fingers (MD #311523) followed by one straight finger (MD #174849) and measure 76 mm, 214 mm, and 315 mm as illustrated.
161. Quantities per tine tube (LH/RH/Center): NARROW – FD230 = 40/41/0, FD235 = 47/48/0, FD240 DR = 55/56/0, FD240 TR = 40/41/26, FD241 = 56/57/0, FD245 = 40/41/41, and FD250 = 47/48/41. WIDE – FD230 = 37/38/0, FD235 = 44/45/0, FD240 DR = 51/52/0, FD240 TR = 37/38/23, FD241 = 52/54/0, FD245 = 37/38/38, and FD250 = 44/45/38. Quantities per tine tube (single reel): NARROW – FD225 = 70. WIDE – FD225 = 71.
162. There are two lengths of finger that can be ordered. The finger at the RH side of the reel is shorter than fingers at the center of the header. The correct finger must be installed in the correct position to prevent damage. Determine the proper length (315 or 305 mm) of a finger by measuring the finger from the inside top loop to the finger tip as shown in illustration.
163. Steel; for single- and double-reel headers only.
164. Aluminum; for triple-reel headers only.

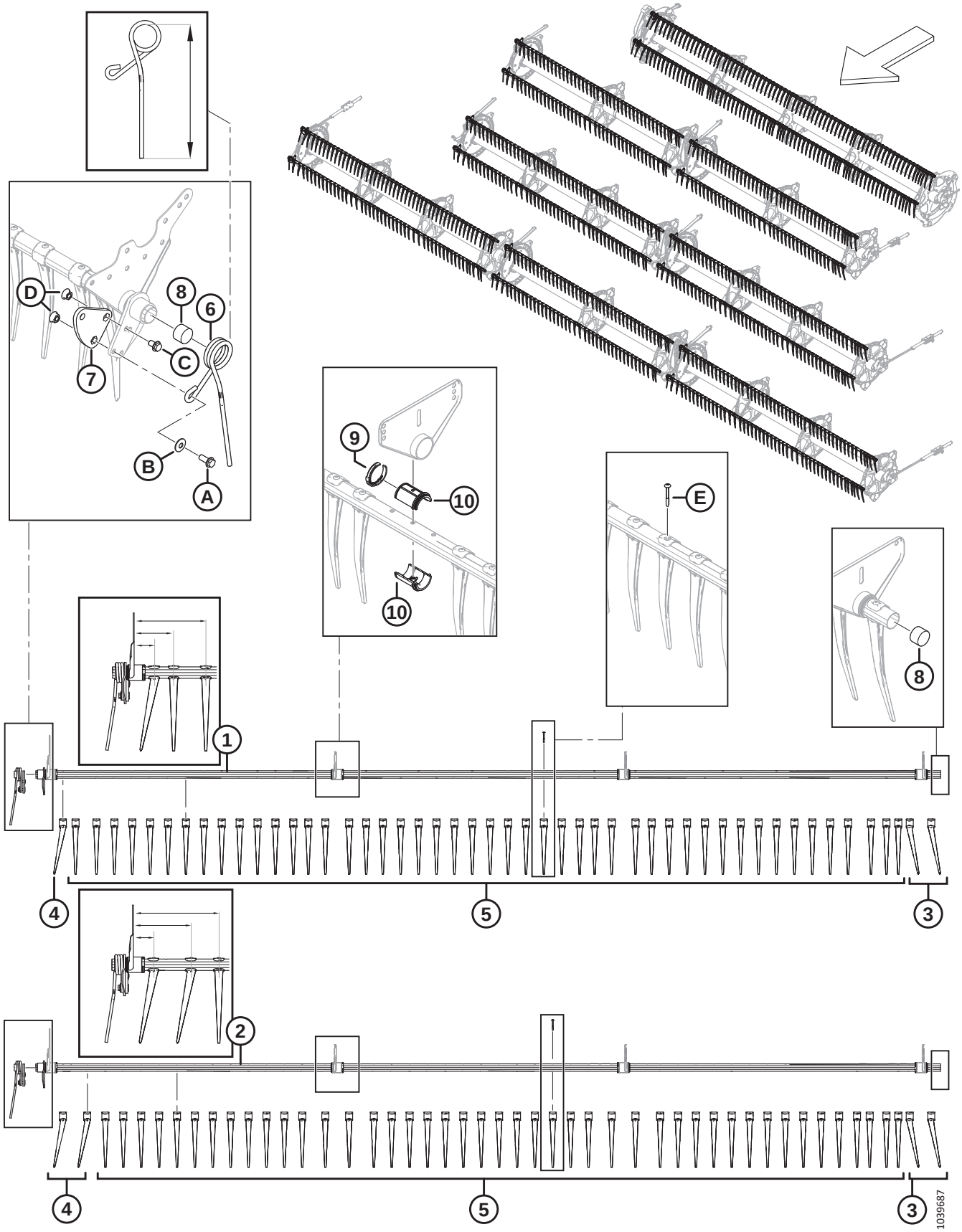
D
8
6
C
7
B
A
9
10
10
E
8
1
4
5
3
2
4
5
3
1039687

Ref	Part Number	Description	Qty	Serial Number
A	320192	BOLT – HEX FLG HD M12 X 1.75 X 30-SPCL-8.8-AA1J		
B	184597	WASHER – CON SPRING M12-AA1J [165]		
C	320187	BOLT – HEX FLG HD M12 X 1.75 X 20-SPCL-8.8-AA1J		
D	184697	NUT – HEX SER FLG M12 X 1.75-8-AA1J		
E	252687	SCREW – 48° PLASTITE TWIN HELIX		

165. Be sure to note the orientation of washer (MD #184597). The concave (inward facing) surface of the washer should be installed facing away from the tine tube crank arm assembly.

57 Reel Discs – Cam End and Linkage (FD225, FD230, FD235, FD240, FD241, FD245, and FD250)

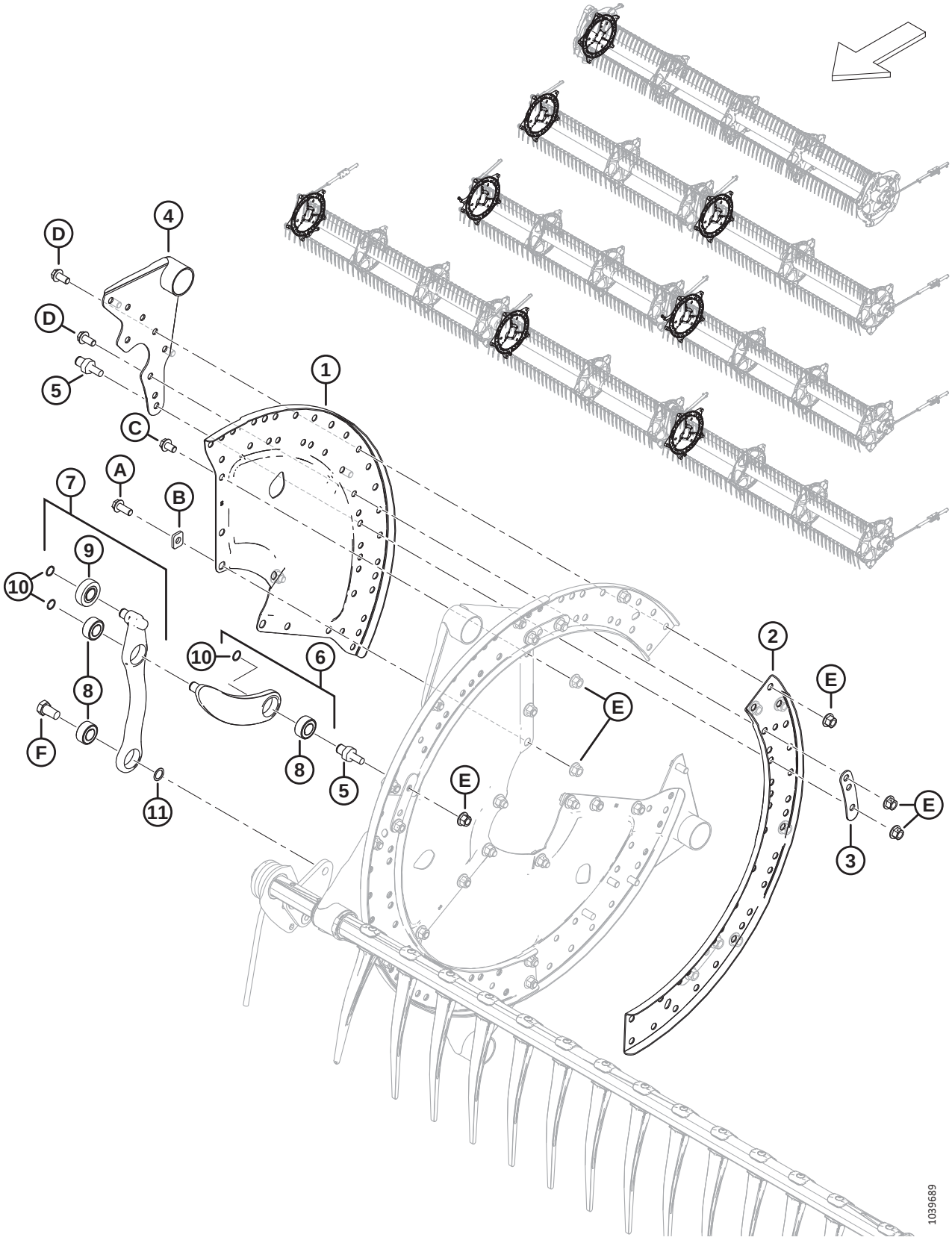

Ref	Part Number	Description	Qty	Serial Number
1	273373	SECTOR – CAM END	3	
2	273376	CHANNEL – CAM DISC	3	
3	311672	STRAP	5	
4	335924	ARM WELDT – CAM END	5	
5	340146	STUD (FOR LINKAGE)	5	
6	311615	ARM – ASSEMBLY [166]	5	
7	311617	ARM – TINE CONTROL ASSY [167]	5	
8	273347	BEARING	A/R	
9	273524	BEARING – CAM FOLLOWER	A/R	
10	273536	RING – RETAINING	10	
11	137529	SHIM – CRANK BEARING		
A	320180	BOLT – HEX FLG HD M12 X 1.75 X 30-SPCL-8.8-AA1J		
B	273666	WASHER		
C	320179	BOLT – HEX FLG HD TFL M12 X 1.75 X 20-SPCL-8.8-AA1J		
D	320175	BOLT – HEX FLG HD TFL M12 X 1.75 X 25-SPCL-8.8-AA1J		
E	136431	NUT – HEX FLG CTR LOC M12 X 1.75-10		
F	228316	BOLT – HEX HD M16 X 1.5 X 15-SPCL-8.8-AA1J		

166. The arm assembly includes arm (NSS), bearing (MD #273347), and retaining ring (MD #273536).
167. The tine control assembly includes arm (NSS), cam follower bearing (MD #273524), two bearings (MD #273347), and retaining ring (MD #273536).

58 Reel Discs – Mid Span, Cam Side (FD225, FD235, FD240, FD241, FD245, and FD250)

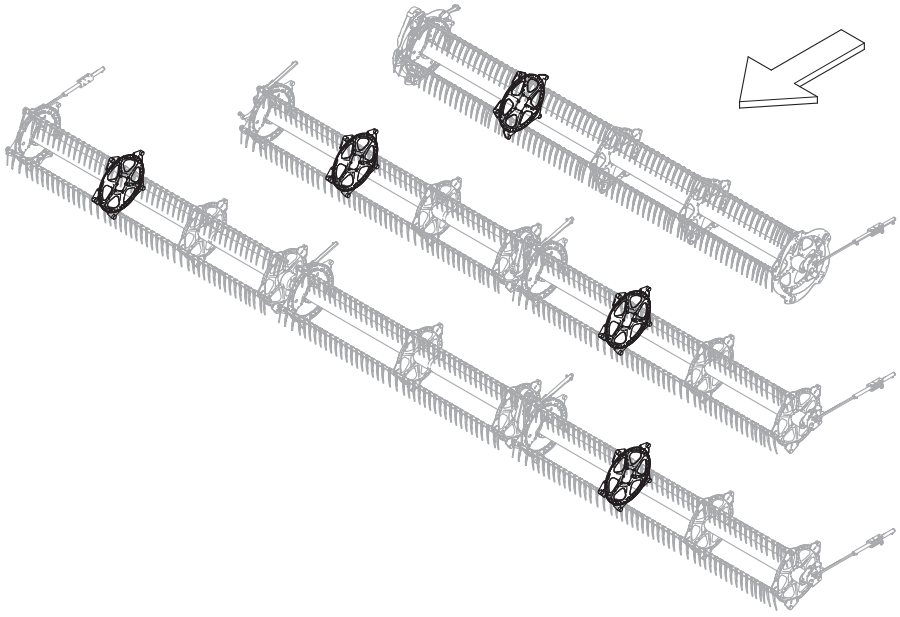

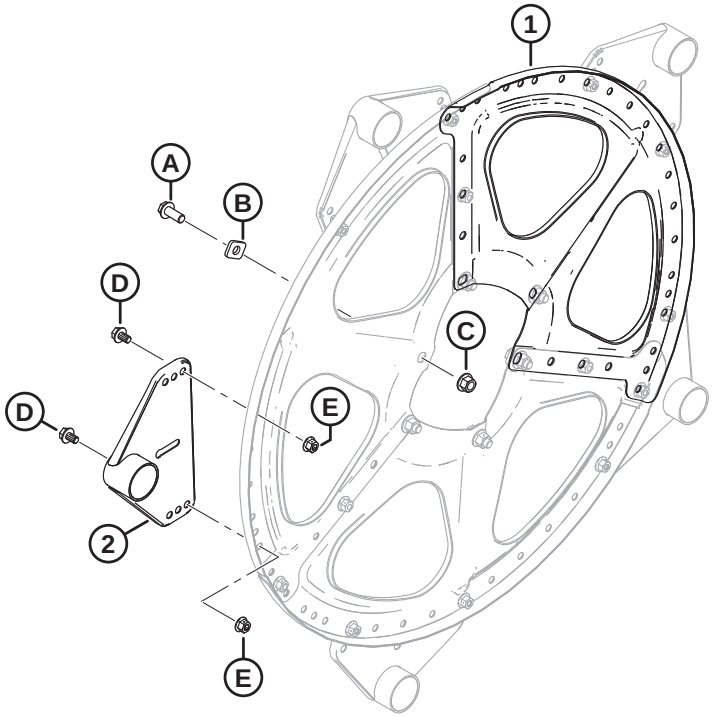

1039691

REEL DISCS – MID SPAN, CAM SIDE (FD225, FD235, FD240, FD241, FD245, AND FD250)

Ref	Part Number	Description	Qty	Serial Number
1	273375	SECTOR – MID SPAN AND TAIL END	3	
2	273523	ARM WELDT – MID SPAN	5	
A	320180	BOLT – HEX FLG HD M12 X 1.75 X 30-SPCL-8.8-AA1J		
B	273666	WASHER		
C	136431	NUT – HEX FLG CTR LOC M12 X 1.75-10		
D	136151	BOLT – HEX FLG HD TFL M10 X 1.5 X 16-8.8-AA1J		
E	135799	NUT – HEX FLG CTR LOC M10 X 1.5-10		

59 Reel Discs – Mid Span, Tail Side (FD225, FD230, FD235, FD240, FD241, FD245, and FD250)

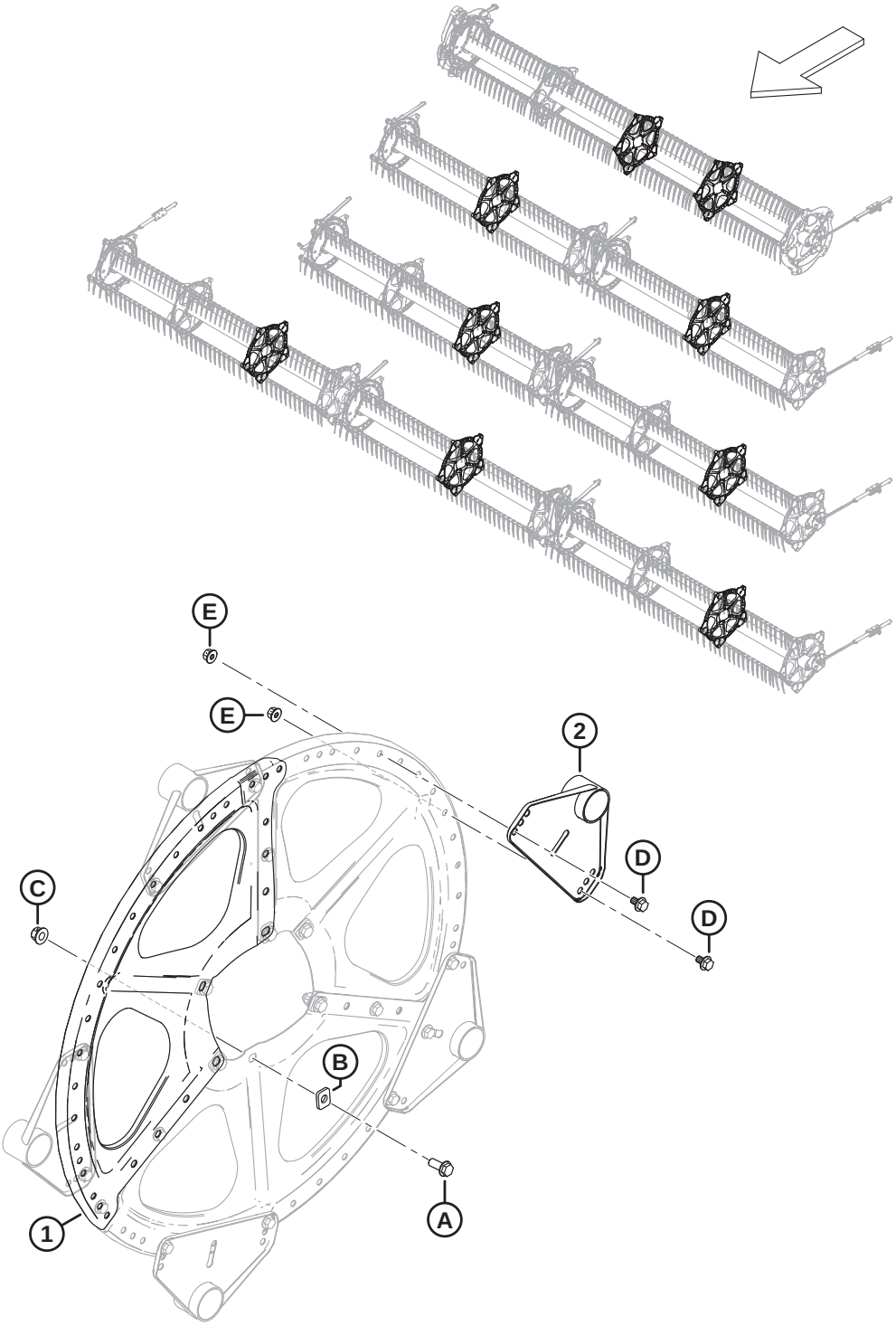

1039693

REEL DISCS – MID SPAN, TAIL SIDE (FD225, FD230, FD235, FD240, FD241, FD245, AND FD250)

Ref	Part Number	Description	Qty	Serial Number
1	273375	SECTOR – MID SPAN AND TAIL END	3	
2	273523	ARM WELDT – MID SPAN	5	
A	320180	BOLT – HEX FLG HD M12 X 1.75 X 30-SPCL-8.8-AA1J		
B	273666	WASHER		
C	136431	NUT – HEX FLG CTR LOC M12 X 1.75-10		
D	136151	BOLT – HEX FLG HD TFL M10 X 1.5 X 16-8.8-AA1J		
E	135799	NUT – HEX FLG CTR LOC M10 X 1.5-10		

60 Reel Discs – Tail End (FD225, FD230, FD235, FD240, FD241, FD245, and FD250)

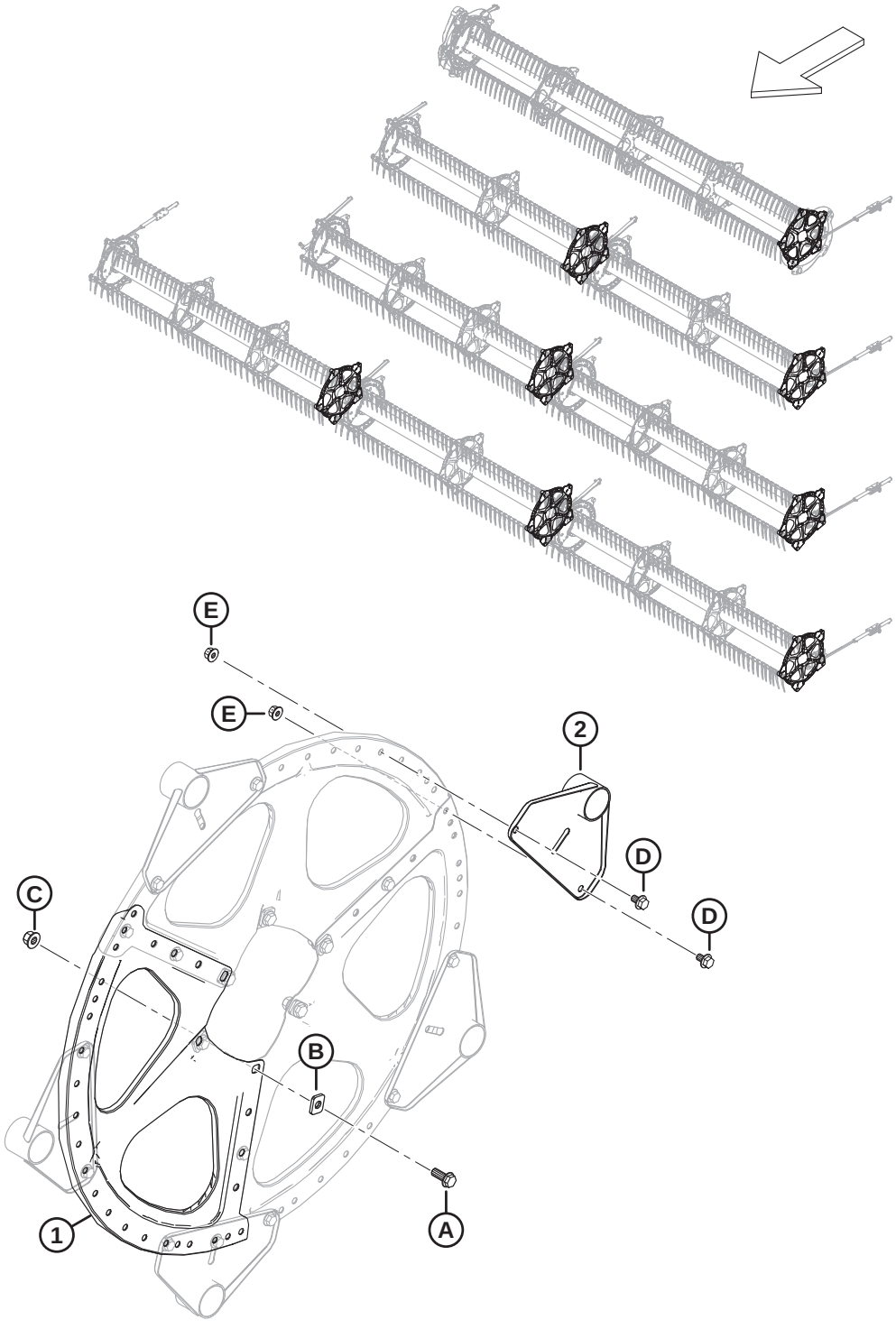

REEL DISCS – TAIL END (FD225, FD230, FD235, FD240, FD241, FD245, AND FD250)

Ref	Part Number	Description	Qty	Serial Number
1	273375	SECTOR – MID SPAN AND TAIL END	3	
2	311347	ARM WELDT – TAIL END	5	
A	320180	BOLT – HEX FLG HD M12 X 1.75 X 30-SPCL-8.8-AA1J		
B	273666	WASHER		
C	136431	NUT – HEX FLG CTR LOC M12 X 1.75-10		
D	136151	BOLT – HEX FLG HD TFL M10 X 1.5 X 16-8.8-AA1J		
E	135799	NUT – HEX FLG CTR LOC M10 X 1.5-10		

61 Reel – Center Tubes, Single Reel

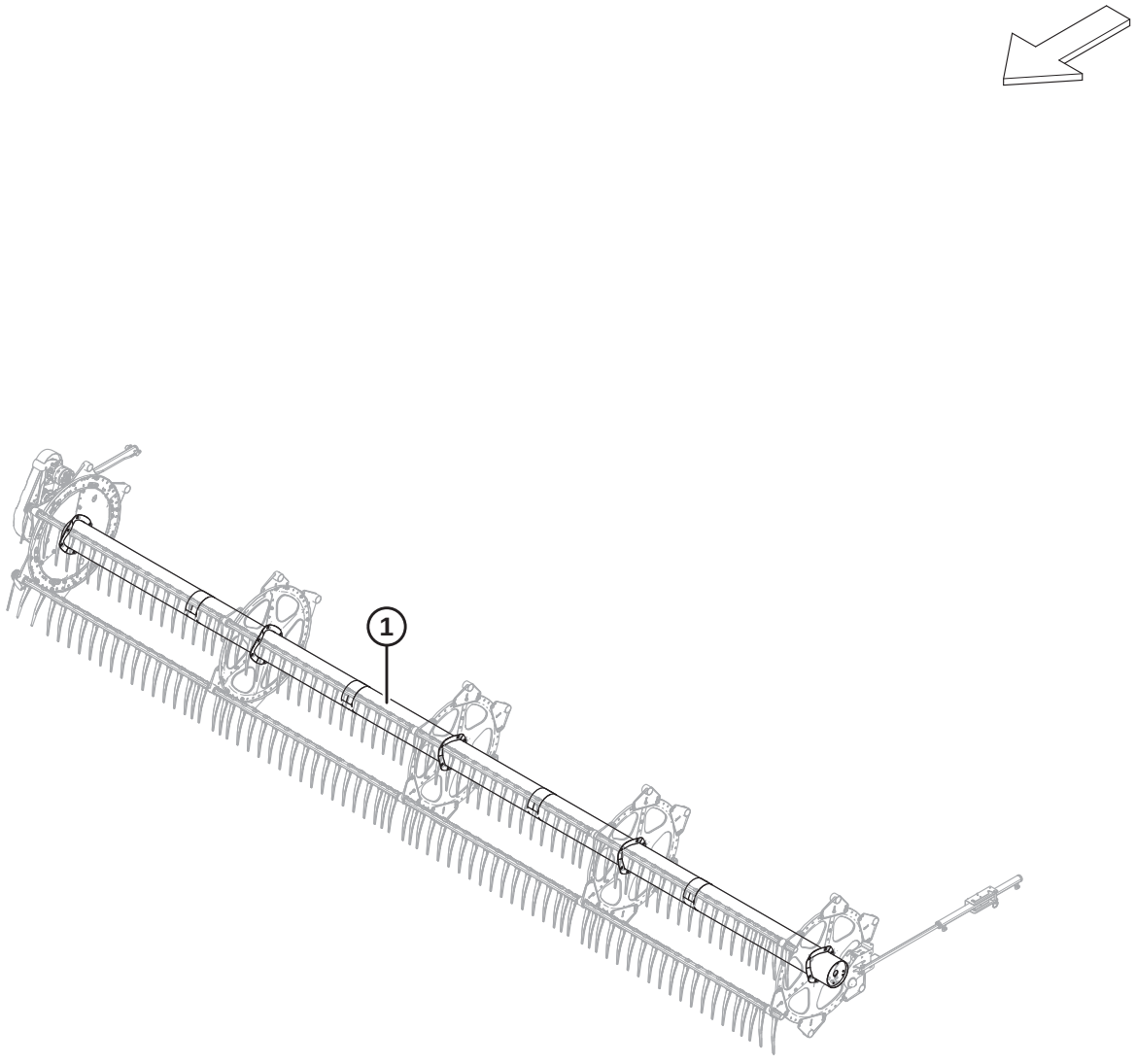

1039380

Ref	Part Number	Description	Qty	Serial Number
1	**360376**	**CENTER TUBE – W/ DECALS, 25 FT (AMBER, RED-ORANGE DECALS)** [168]	**1**	

168. FD225 single reel.

62 Reel – Center Tubes, Double Reel

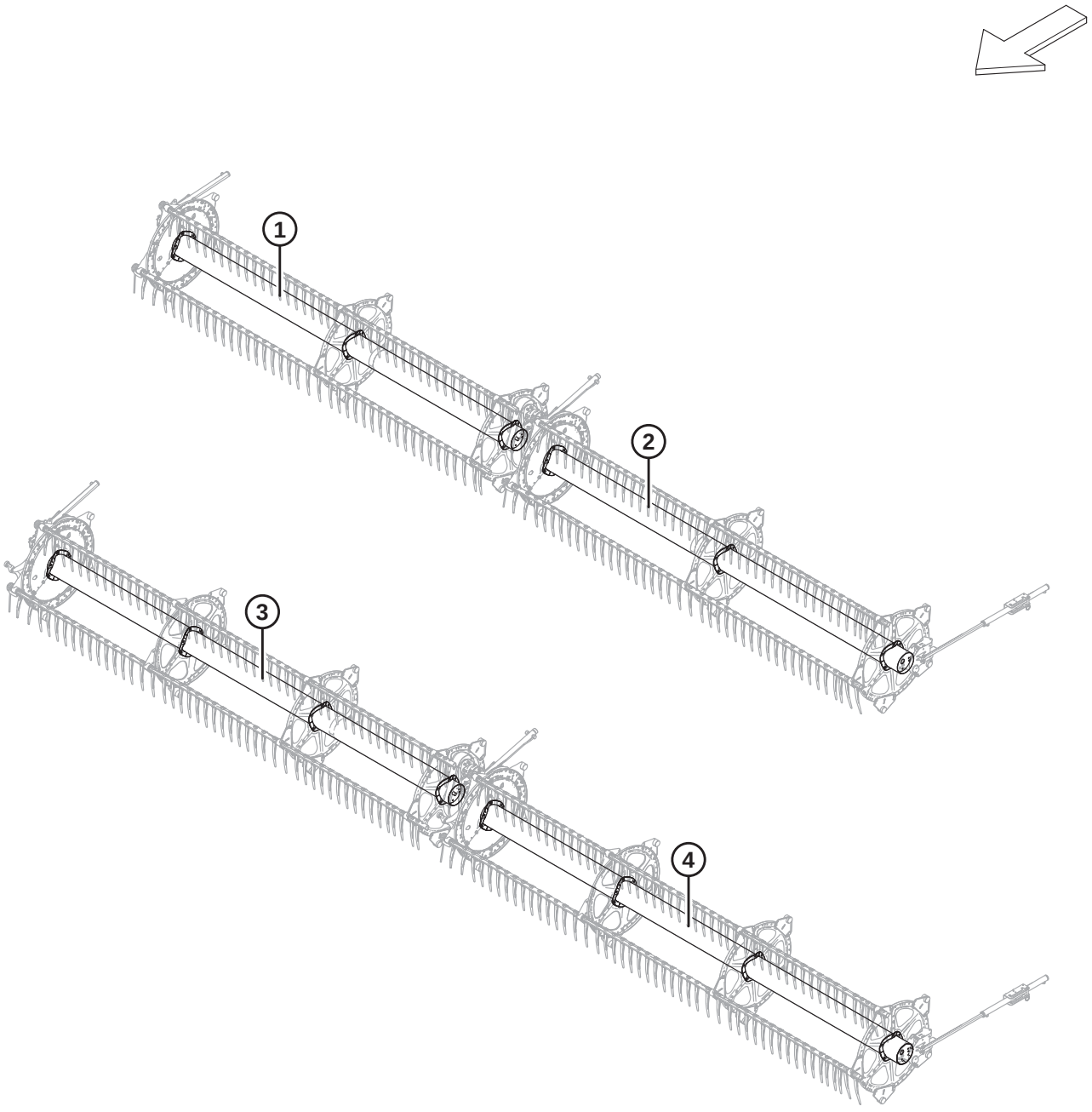

1038508

Ref	Part Number	Description	Qty	Serial Number
1	311644	CENTER TUBE – W/ DECALS, 30 FT (AMBER, RED-ORANGE DECALS) 169	1	
2	311643	CENTER TUBE – W/ DECALS, 30 FT (AMBER, RED-ORANGE DECALS) 170	1	
3	311646	CENTER TUBE – W/ DECALS, 35 FT (AMBER, RED-ORANGE DECALS) 171	1	
	311195	CENTER TUBE – W/ DECALS, 40 FT (AMBER DECALS) 172	1	
	311648	CENTER TUBE – W/ DECALS, 41 FT (AMBER, RED-ORANGE DECALS) 173	1	
4	311645	CENTER TUBE – W/ DECALS, 35 FT (AMBER, RED-ORANGE DECALS) 174	1	
	311658	CENTER TUBE – W/ DECALS, 40 FT (AMBER, RED-ORANGE DECALS) 175	1	
	311647	CENTER TUBE – W/ DECALS, 41 FT (AMBER, RED-ORANGE DECALS) 176	1	

169. FD230 RH double reel.
170. FD230 LH double reel.
171. FD235 RH double reel.
172. FD240 RH double reel.
173. FD241 RH double reel.
174. FD235 LH double reel.
175. FD240 LH double reel.
176. FD241 LH double reel.

63 Reel – Center Tubes, Triple Reel

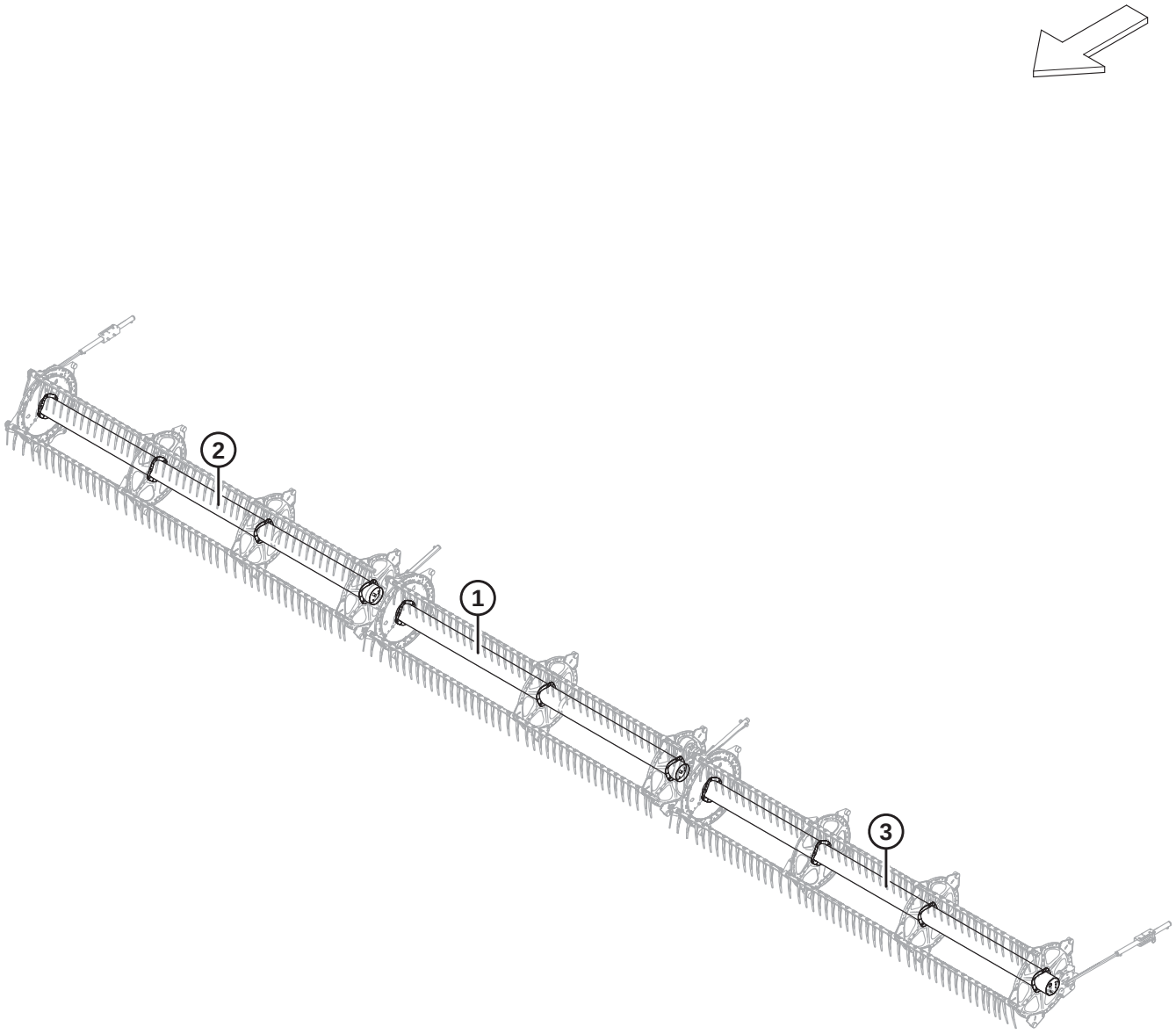

1038505

Ref	Part Number	Description	Qty	Serial Number
1	311644	CENTER TUBE – W/ DECALS, 45 AND 50 FT (AMBER, RED-ORANGE DECALS) [177]	1	
	311038	CENTER TUBE – W/ DECALS, 40 FT (AMBER DECALS [178]	1	
2	311646	CENTER TUBE – W/ DECALS, 50 FT (AMBER, RED-ORANGE DECALS) [179]	1	
	311644	CENTER TUBE – W/ DECALS, 40 AND 45 FT (AMBER, RED-ORANGE DECALS) [180]	1	
3	311645	CENTER TUBE – W/ DECALS, 50 FT (AMBER, RED-ORANGE DECALS) [181]	1	
	311643	CENTER TUBE – W/ DECALS, 40 AND 45 FT (AMBER, RED-ORANGE DECALS) [182]	1	

177. FD245 and FD250 center triple reel.
178. FD240 center triple reel.
179. FD250 RH triple reel.
180. FD240 RH triple reel and FD245 RH triple reel.
181. FD250 LH triple reel.
182. FD240 LH triple reel and FD245 LH triple reel.

64 Reel – Endshields, Cam End, Inboard

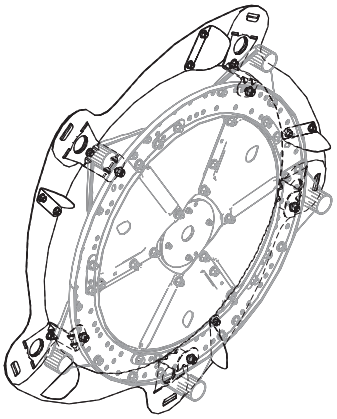

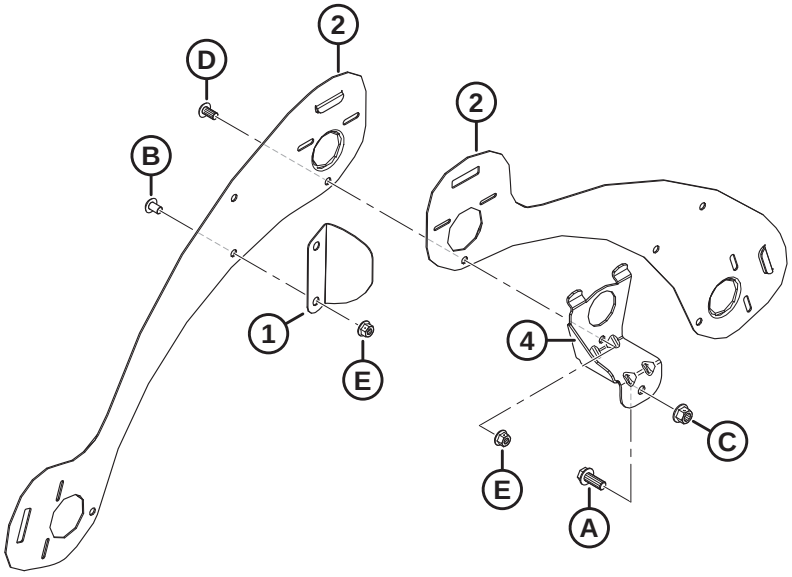

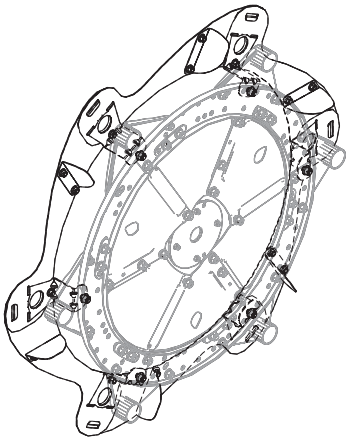

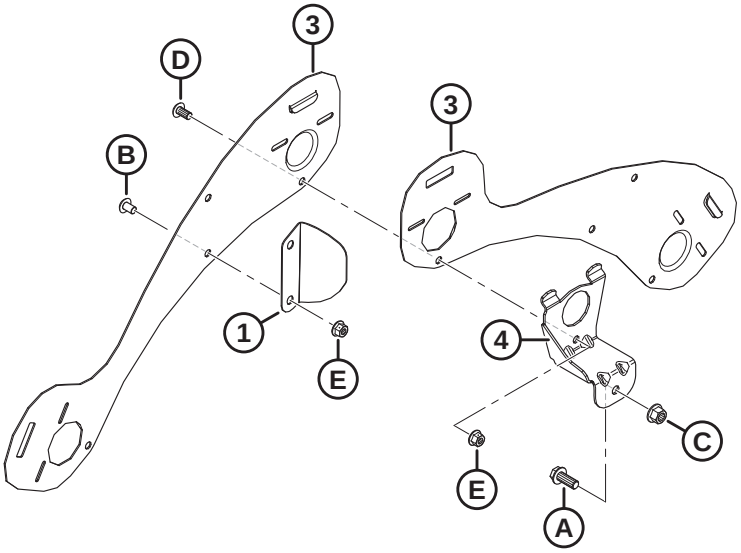

1036485

NOTE:

Illustration; TOP: 5 bat, BOTTOM: 6 bat.

Ref	Part Number	Description	Qty	Serial Number
1	311906	DEFLECTOR – CAM INBOARD [183]		
2	273823	SHIELD – 5 BAT LH REEL CAM END	5	
3	273813	SHIELD – 6 BAT LH REEL CAM END	6	
4	311964	SUPPORT – WELDT CAM END [183]		
A	320180	BOLT – HEX FLG HD M12 X 1.75 X 30-SPCL-8.8-ZINC		
B	136640	SCREW – TORX TRUSS HD M10 X 1.5 X 16 X SPCL-8.8-AA1J		
C	136431	NUT – HEX FLG CTR LOC M12 X 1.75-10		
D	136395	SCREW – TORX TRUSS HD M10 X 1.5 X 20 X SPCL-8.8-A3L		
E	135799	NUT – HEX FLG CTR LOC M10 X 1.5-10		

183. Quantities: 5 bat = 5, 6 bat = 6.

65 Reel – Endshields, Cam End, Outboard

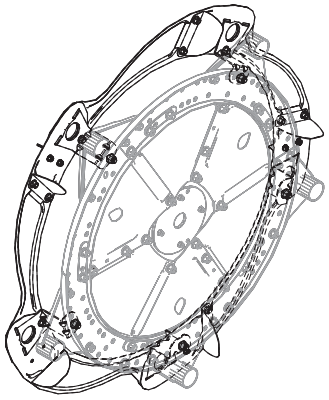

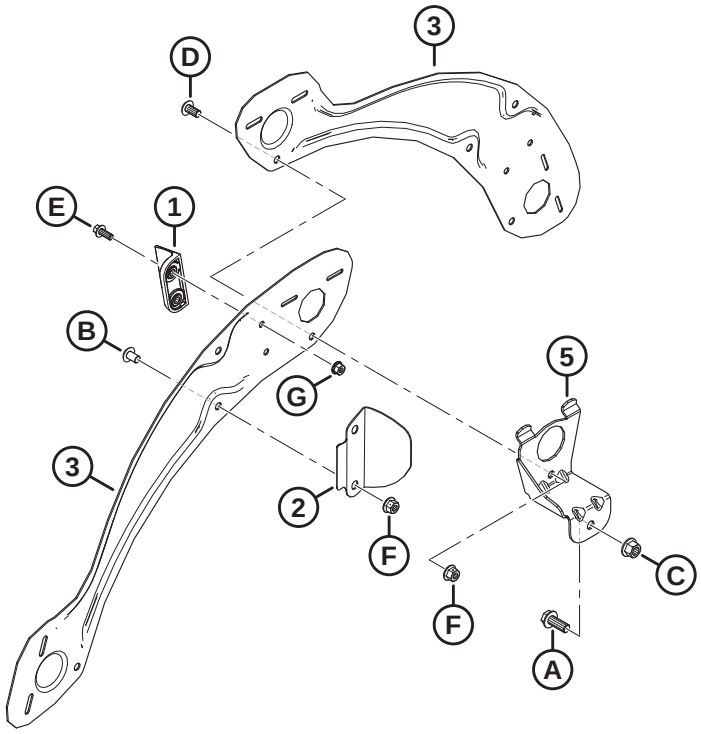

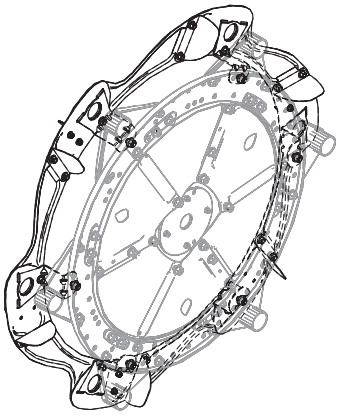

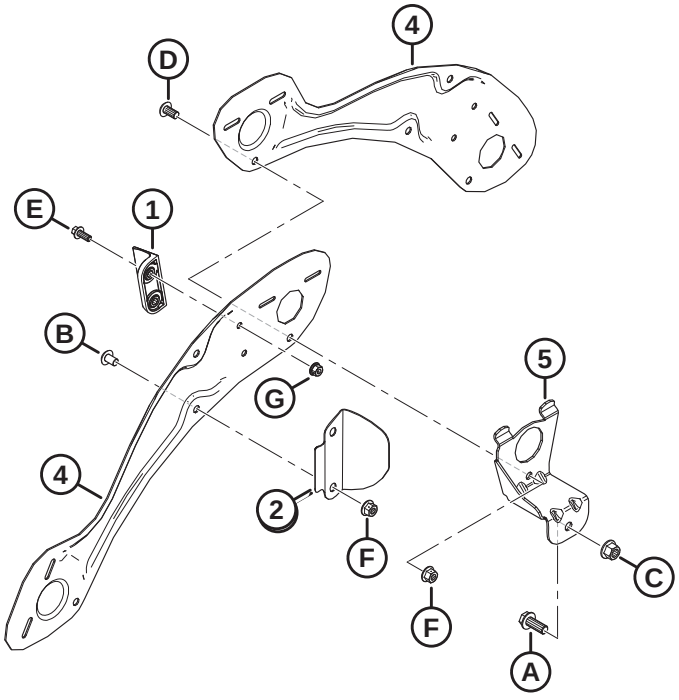

1036486

NOTE:

Illustration; TOP: 5 bat, BOTTOM: 6 bat.

Ref	Part Number	Description	Qty	Serial Number
1	313035	PADDLE – REEL END, HYTREL	3	
2	311729	DEFLECTOR – CAM OUTBOARD [184]		
3	311694	SHIELD – OUTBOARD RH 5 BAT	5	
4	311752	SHIELD – OUTBOARD RH 6 BAT	6	
5	311964	SUPPORT – WELDT CAM END [184]		
A	320180	BOLT – HEX FLG HD M12 X 1.75 X 30-SPCL-8.8-ZINC		
B	136640	SCREW – TORX TRUSS HD M10 X 1.5 X 16 X SPCL-8.8-AA1J		
C	136431	NUT – HEX FLG CTR LOC M12 X 1.75-10		
D	136395	SCREW – TORX TRUSS HD M10 X 1.5 X 20 X SPCL-8.8-A3L		
E	136300	BOLT – HEX FLG HD TFL M8 X 1.25 X 20-8.8-AA3L		
F	135799	NUT – HEX FLG CTR LOC M10 X 1.5-10		
G	135337	NUT – HEX FLG CTR LK M8 X 1.25-8-AA1J		

184. Quantities: 5 bat = 5, 6 bat = 6.

66 Reel – Endshields, Tail End, Inboard

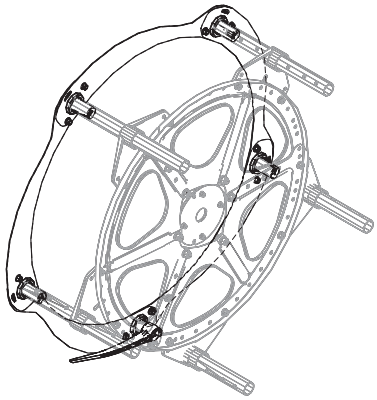

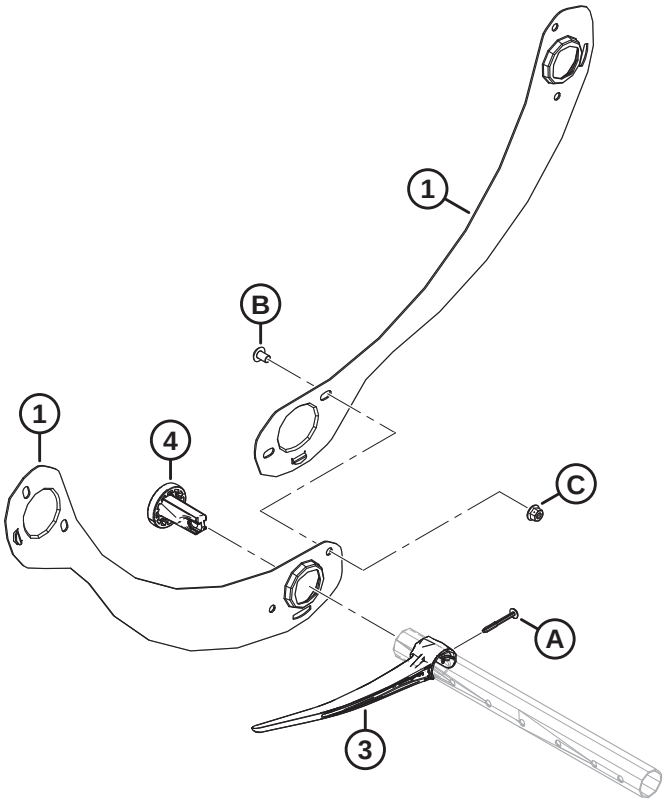

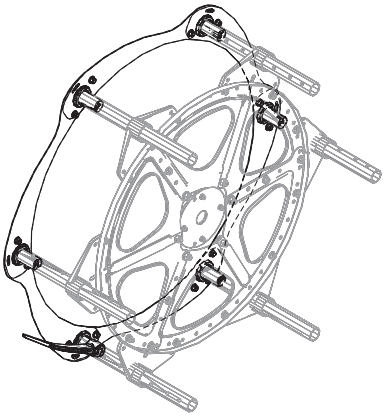

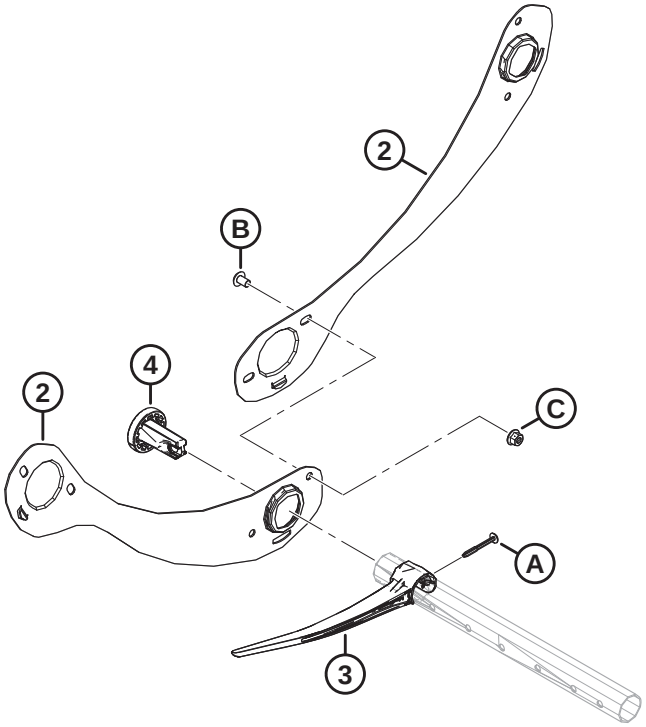

1036769

NOTE:

Illustration; TOP: 5 bat, BOTTOM: 6 bat.

Ref	Part Number	Description	Qty	Serial Number
1	311795	SHIELD – 5 BAT RH REEL, TAIL END	5	
2	311822	SHIELD – 6 BAT RH REEL TAIL END	6	
3	311524	FINGER – PLASTIC, LH ANGLED (10 PACK) [185]		
4	273968	BUSHING – ENDSHIELD	5	
A	252687	SCREW – 48° PLASTITE TWIN HELIX		
B	136640	SCREW – TORX TRUSS HD M10 X1.5 X 16 X SPCL-8.8-AA1J		
C	135799	NUT – HEX FLG CTR LOC M10 X 1.5-10		

185. Quantities: 5 bat = 5, 6 bat = 6.

67 Reel – Endshields, Tail End, Outboard

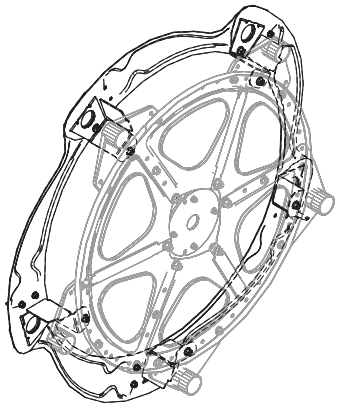

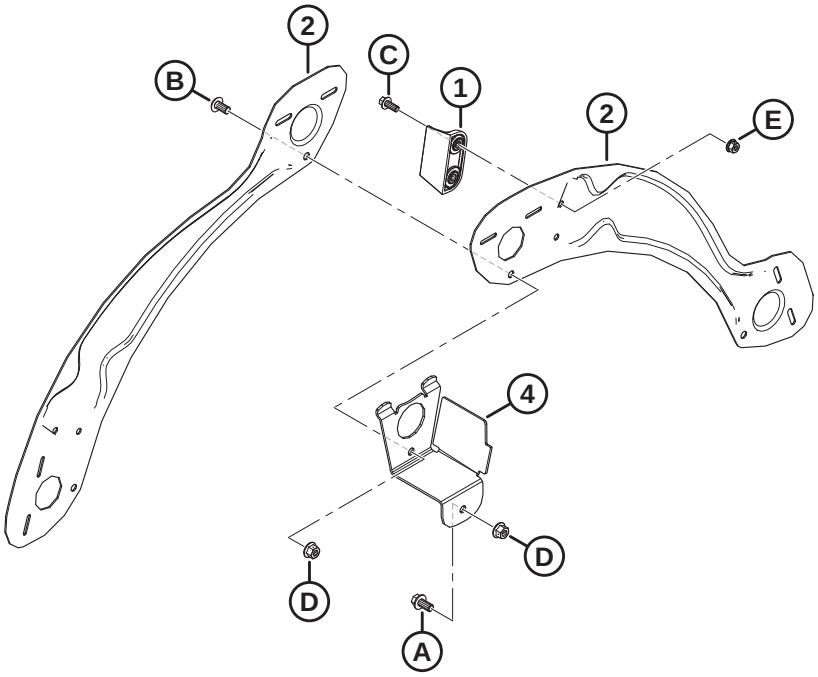

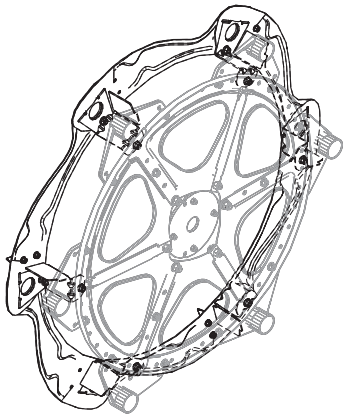

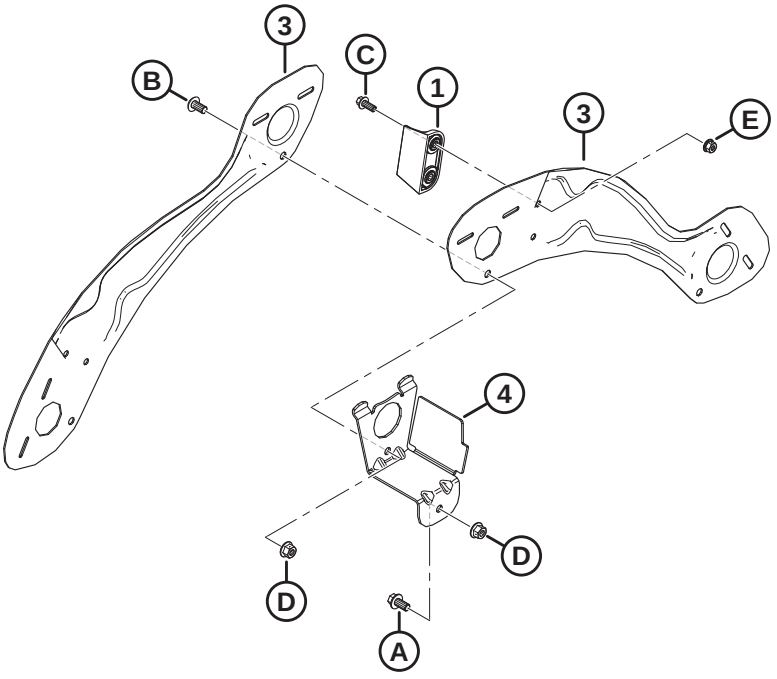

1036771

NOTE:

Illustration; TOP: 5 bat, BOTTOM: 6 bat.

Ref	Part Number	Description	Qty	Serial Number
1	313035	PADDLE – REEL END, HYTREL	3	
2	311695	SHIELD – OUTBOARD LH 5 BAT	5	
3	311753	SHIELD – OUTBOARD LH 6 BAT	6	
4	311965	SUPPORT – WELDT TAIL END [186]		
A	152655	BOLT – HEX FLG HD M10 X 1.5 X 20-8.8-AA1J		
B	136395	SCREW – TORX TRUSS HD M10 X 1.5 X 20 X SPCL-8.8-A3L		
C	136300	BOLT – HEX FLG HD TFL M8 X 1.25 X 20-8.8-AA3L		
D	135799	NUT – HEX FLG CTR LOC M10 X 1.5-10		
E	135337	NUT – HEX FLG CTR LK M8 X 1.25-8-AA1J		

186. Quantities: 5 bat = 5, 6 bat = 6.

68 Skid Shoes – End and Center

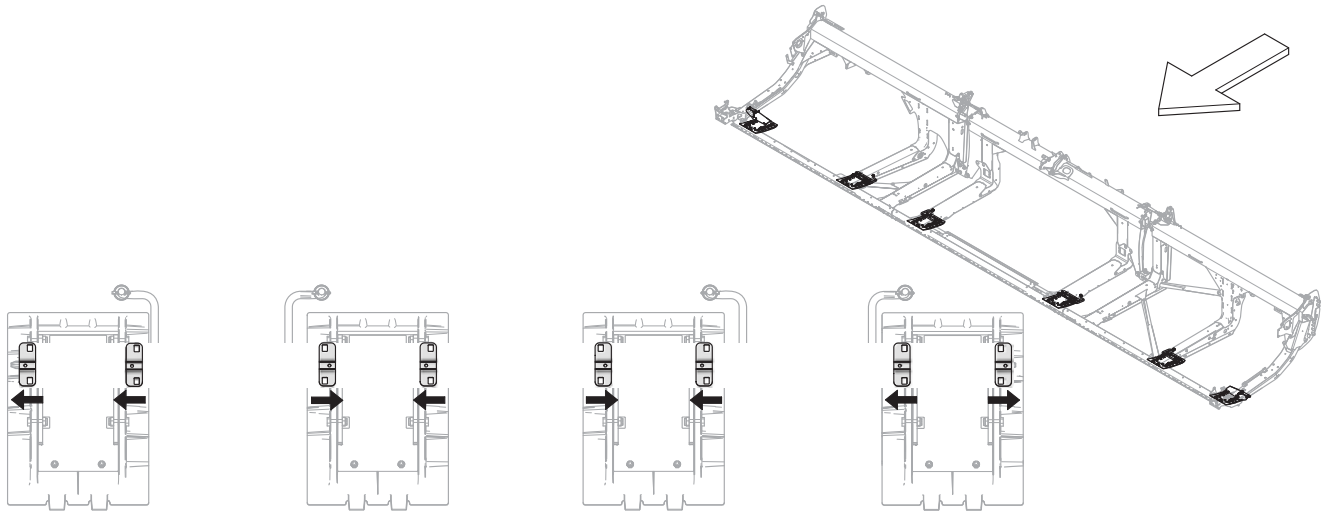

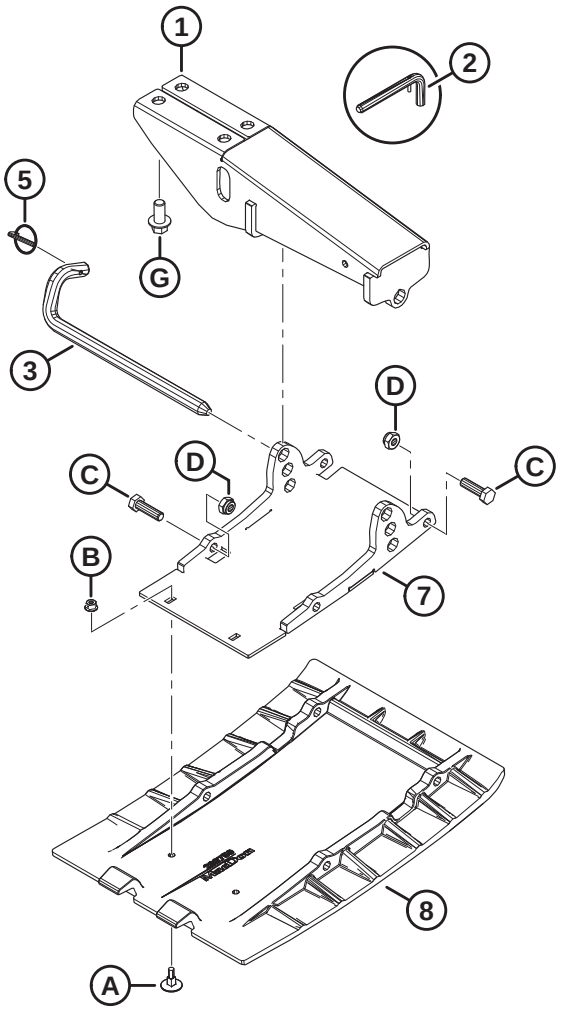

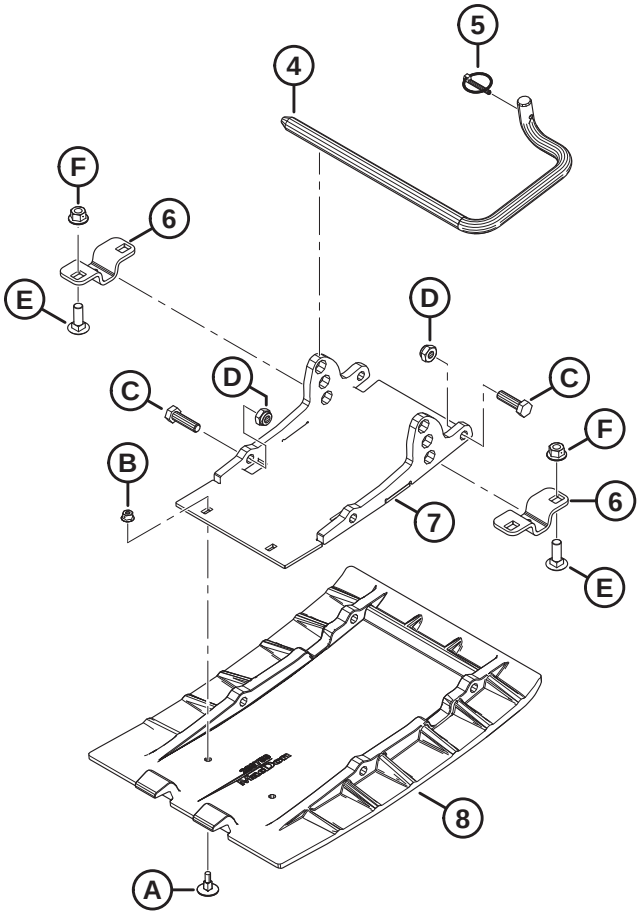

1036404

SKID SHOES – END AND CENTER

Ref	Part Number	Description	Qty	Serial Number
1	312680	MOUNT WELDT – SKID SHOE (END)	2	
	312777	KIT – OUTER SHOE MOUNT C/W PIN [187]	A/R	
2	313965	ASSY – PIN (SERVICE ONLY) [188]	A/R	
3	312675	ROD – ENGAGING	2	
	312777	KIT – OUTER SHOE MOUNT C/W PIN [187]	A/R	
4	165588	ROD – ENGAGING RH [189]	2	
	165168	ROD – ENGAGING LH [189]	2	
5	50193	PIN – LYNCH [190]	6	
6	232806	BRACKET – SHOE SUPPORT [191]	8	
7	289869	SUPPORT WELDT – PLATE [190]	6	
8	289759	SHOE – WEARPLATE, POLYETHYLENE [190]	6	
A	252176	BOLT – ELEV CSK M6 X 1 X 23-8.8		
B	152668	NUT – HEX FLG CTR LOC M6 X 1-8		
C	30628	BOLT – HEX HD M10 X 1.5 X 35-8.8-AA1J		
D	184692	NUT – HEX NYLOC M10 X 1.5-8-AA1J		
E	184662	BOLT – RHSN TFL M10 X 1.5 X 30-8.8-AA1J		
F	135799	NUT – HEX FLG CTR LOC M10 X 1.5-10		
G	136399	BOLT – HEX FLG HD TFL M12 X 1.75 X 25-8.8-AA1J		

187. The kit includes end skid shoe mount (MD #312680), engaging rod (MD #312675), and lynch pin (MD #50193). Kit is used to service headers with superseded mounts (MD #251872) and superseded rods (MD #232674).
188. Pin assembly includes lock pin (MD #23370) and spring pin (MD #30907). Pin assembly (MD #313965) remains available for service only.
189. Right engaging rod is shown in the illustration. Quantities of RH engaging rod (MD #165588) and LH engaging rod (MD #165168) are one of each for FD225 headers, and two of each for FD230–FD250 headers.
190. Quantities: FD225 = 4, FD230–FD250 = 6.
191. Orientation of this bracket varies, be sure to install as per shown for each center skid shoe. Compare location of small hole with arrows. Quantities: FD225 = 4, FD230–FD250 = 8.

69 Hydraulics – Manifold Fittings and Fasteners

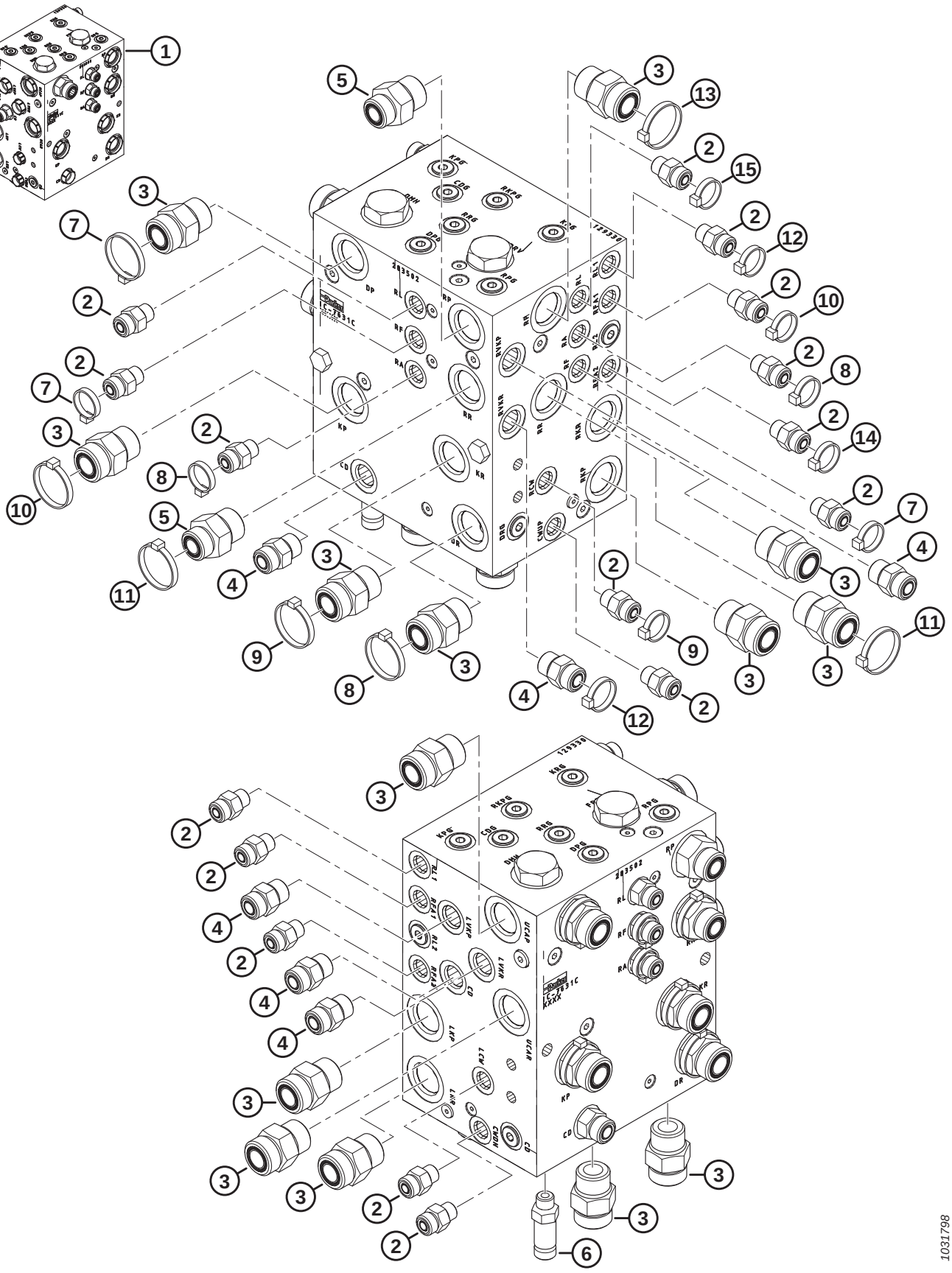

Ref	Part Number	Description	Qty	Serial Number
1	283502	MANIFOLD ASSY – DK UNTIMED	A/R	
2	135778	FITTING – ADAPTER	15	
	50219	O-RING – Ø1.98 X Ø11.89		
	135865	O-RING – Ø1.78 X Ø9.25		
3	135788	FITTING – ADAPTER	14	
	30971	O-RING – Ø2.95 X Ø23.47		
	135868	O-RING – Ø1.78 X Ø18.77		
4	135780	FITTING – ADAPTER	6	
	44209	O-RING – Ø2.21 X Ø16.36		
	135866	O-RING – Ø1.78 X Ø12.42		
5	135786	FITTING – ADAPTER	2	
	30971	O-RING – Ø2.95 X Ø23.47		
	135867	O-RING – Ø1.78 X Ø15.60		
6	252902	FITTING – HYD CONNECTOR, LONG	1	
	50219	O-RING – Ø1.98 X Ø11.89		
	135865	O-RING – Ø1.78 X Ø9.25		
7	49227	FASTENER – CABLE TIE,, GREEN	3	
8	40702	FASTENER – CABLE TIE, RED	3	
9	40703	FASTENER – CABLE TIE, BLUE	2	
10	40704	FASTENER – CABLE TIE, ORANGE	2	
11	40701	FASTENER – CABLE TIE, YELLOW	2	
12	252795	FASTENER – CABLE TIE, PINK	2	
13	49232	FASTENER – CABLE TIE, WHITE	1	
14	135266	FASTENER – CABLE TIE, LIGHT BLUE	1	
15	21763	FASTENER – CABLE TIE, BLACK	1	

70 Hydraulics – Manifold Plugs

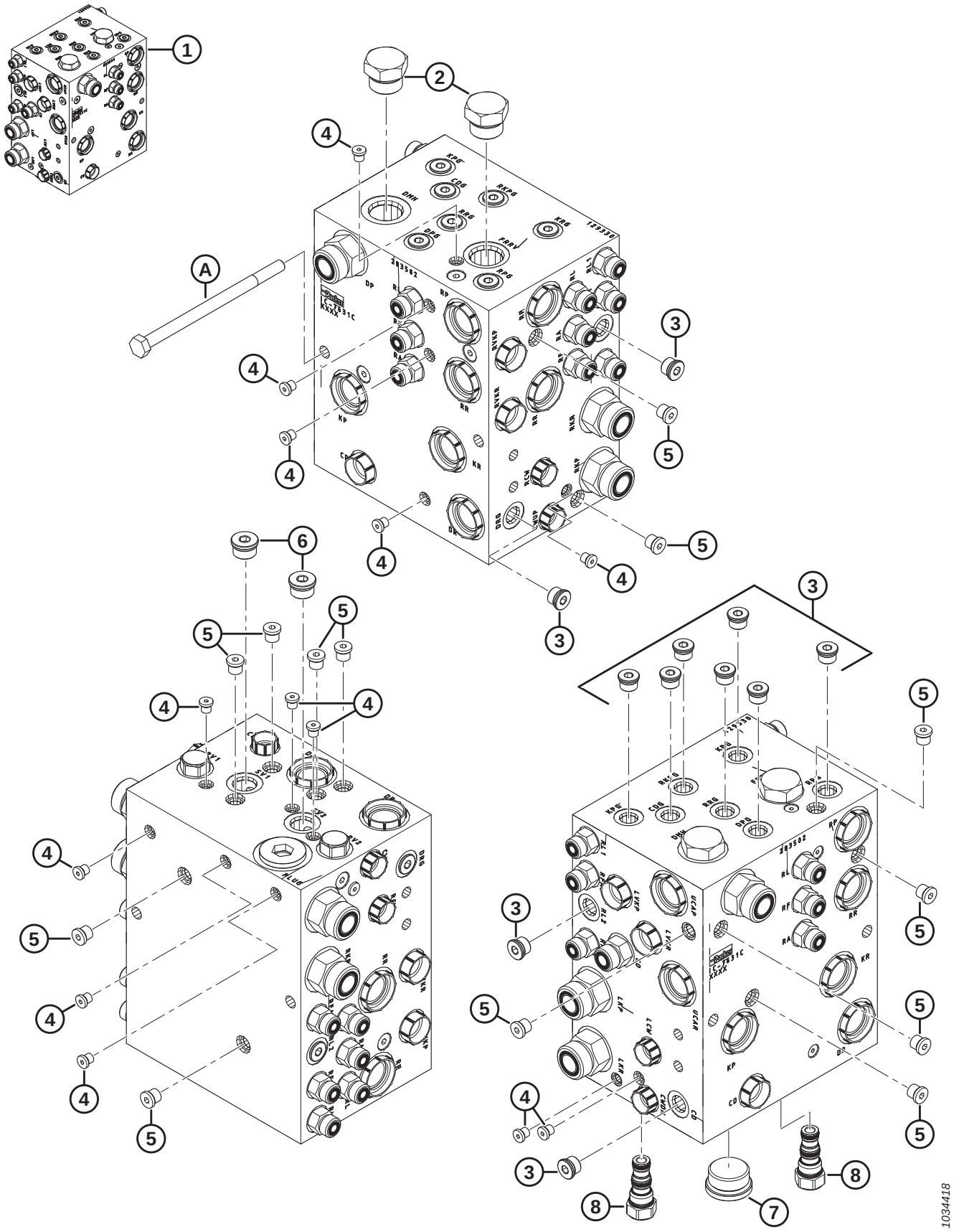

HYDRAULICS – MANIFOLD PLUGS

Ref	Part Number	Description	Qty	Serial Number
1	283502	MANIFOLD ASSY – DK UNTIMED	A/R	
2	103575	PLUG – HEX C/W O-RING	2	
3	100577	PLUG – HEX SOCKET C/W O-RING	11	
	50219	O-RING – Ø1.98 X Ø11.89		
4	135952	PLUG – HEX SOCKET C/W O-RING	13	
5	102711	PLUG – HEX SOCKET C/W O-RING	13	
6	158174	PLUG – HEX SOCKET C/W O-RING	2	
	44209	O-RING – Ø2.21 X Ø16.36		
7	136524	PLUG – HEX SOCKET	1	
	50220	O-RING – Ø2.95 X Ø29.74		
8	283567	PLUG – CAVITY	2	
	283569	SEAL KIT		
A	136850	BOLT – HEX HD M10 X 1.5 X 160-8.8-AA1J		

71 Hydraulics – Knife Drive, Single and Double Knife, Left Side (FD225, FD230, FD235, FD240, FD241, and FD245)

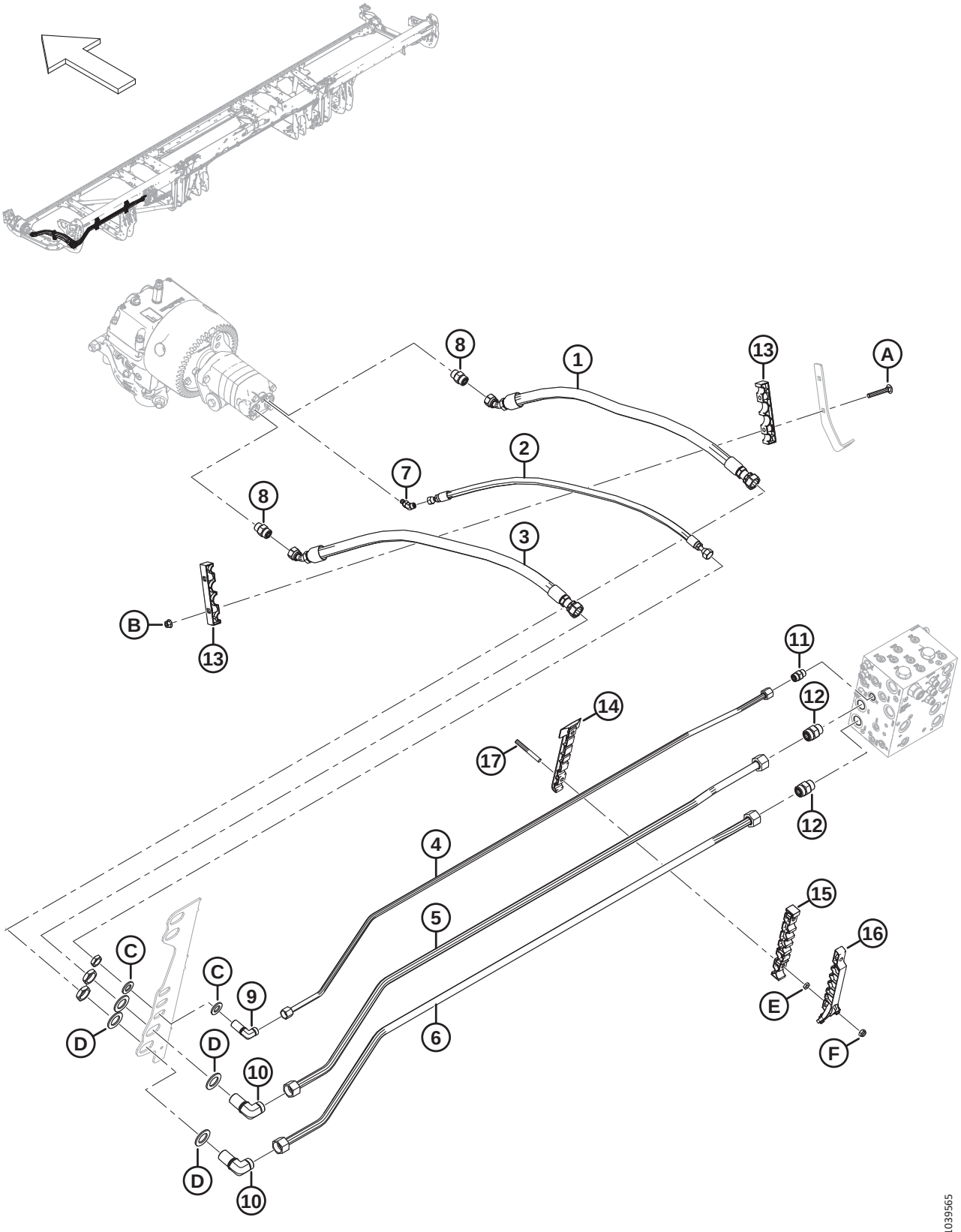

Ref	Part Number	Description	Qty	Serial Number
1	283063	HOSE – HYD	1	
2	283065	HOSE – HYD	1	
3	283202	HOSE – HYD	1	
4	**283233**	**LINE – HYDRAULIC (FD225)**	**1**	
	283048	LINE – HYDRAULIC (FD230)	1	
	283201	LINE – HYDRAULIC (FD235)	1	
	283411	LINE – HYDRAULIC (FD240)	1	
	283458	LINE – HYDRAULIC (FD241)	1	
	283411	LINE – HYDRAULIC (FD245)	1	
5	**283232**	**LINE – HYDRAULIC (FD225)**	**1**	
	283047	LINE – HYDRAULIC (FD230)	1	
	283104	LINE – HYDRAULIC (FD235)	1	
	283410	LINE – HYDRAULIC (FD240)	1	
	283457	LINE – HYDRAULIC (FD241)	1	
	283410	LINE – HYDRAULIC (FD245)	1	
6	**283231**	**LINE – HYDRAULIC (FD225)**	**1**	
	283046	LINE – HYDRAULIC (FD230)	1	
	283102	LINE – HYDRAULIC (FD235)	1	
	283409	LINE – HYDRAULIC (FD240)	1	
	283456	LINE – HYDRAULIC (FD241)	1	
	283409	LINE – HYDRAULIC (FD245)	1	
7	252307	FITTING – ELBOW 45° HYD	1	
	50223	O-RING – Ø1.83 X Ø8.92		
	135957	O-RING – Ø1.78 X Ø7.65		
8	184461	FITTING – ADAPTER HYD	2	
	44210	O-RING – Ø2.46 X Ø19.18		
	135867	O-RING – Ø1.78 X Ø15.60		
9	136244	FITTING – ELBOW 90° BULKHEAD HYD [192]	1	
	135866	O-RING – Ø1.78 X Ø12.42		
10	136245	FITTING – ELBOW 90° BULKHEAD HYD [192]	2	
	135868	O-RING – Ø1.78 X Ø18.77		
11	135780	FITTING – ADAPTER	1	
	44209	O-RING – Ø2.21 X Ø16.36		
	135866	O-RING – Ø1.78 X Ø12.42		
12	135788	FITTING – ADAPTER	2	
	30971	O-RING – Ø2.95 X Ø23.47		
	135868	O-RING – Ø1.78 X Ø18.77		
13	283984	CLAMP – LINE KNIFE	2	
14	283797	CLAMP – LINE BOTTOM LH [193]		

192. The fitting includes a securing nut.
193. Quantities: FD225 = 1, FD230 = 2, FD235 = 3, FD240 = 4, FD241 = 4, and FD245 = 4.

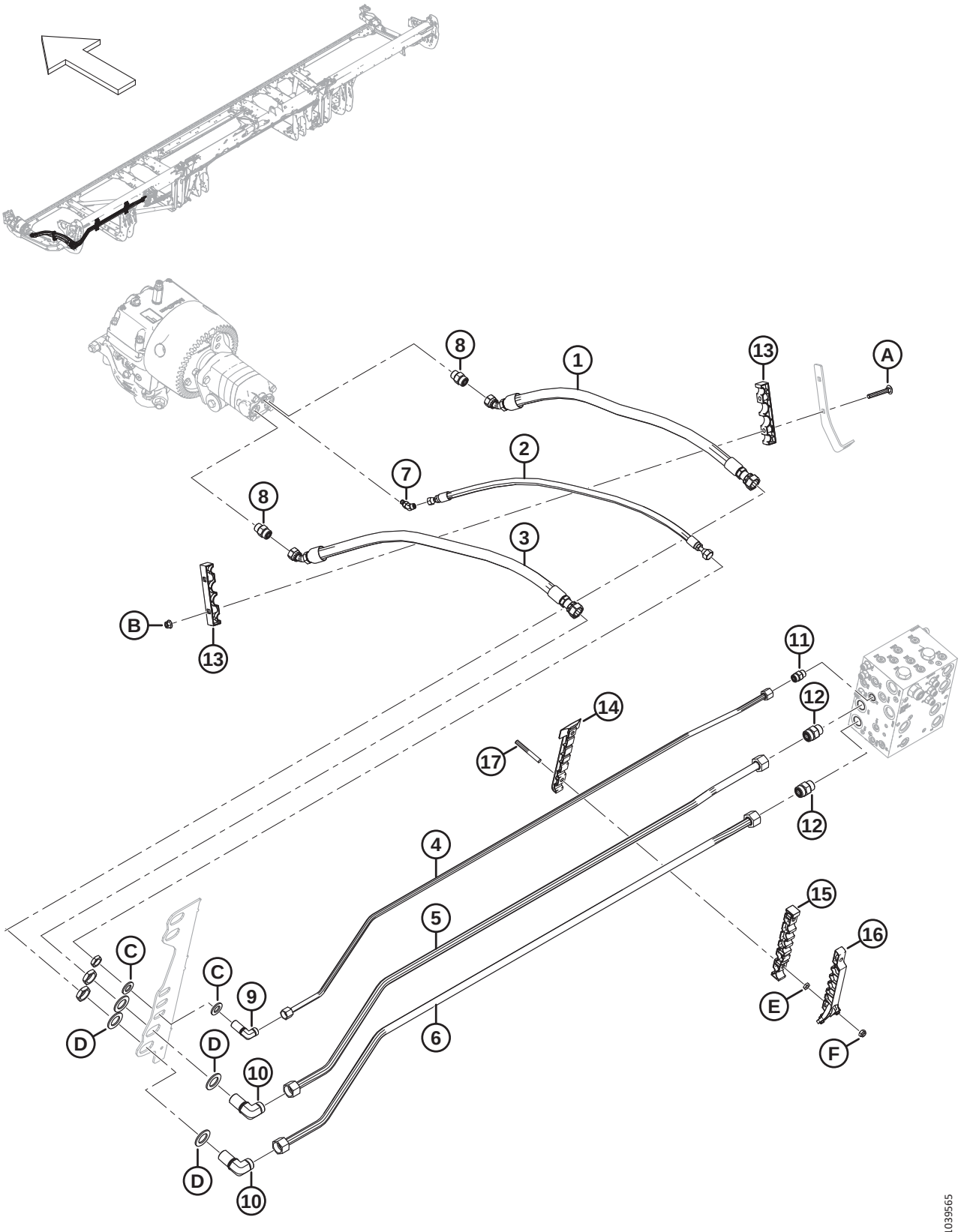
8
1
13
A
2
7
8
3
B
13
11
12
14
17
12
4
5
6
15
16
E
F
C
C
9
D
D
10
D
10
1039565

Ref	Part Number	Description	Qty	Serial Number
15	283807	CLAMP – LINE MIDDLE LH [193]		
16	311233	CLAMP – LINE TOP LH [193]		
17	312654	STUD – THRD CLAMP PATCH WING [194]		
A	136495	BOLT – RHSN M10 X 1.5 X 70-8.8-AA1J	2	
B	135799	NUT – HEX FLG CTR LOC M10 X 1.5-10	2	
C	18601	WASHER – FLAT SAE	2	
D	136355	WASHER – FLAT 2.0 IN OD ZP	4	
E	136442	NUT – HEX THIN M10 X 1.5-05-AA1J		
F	184692	NUT – HEX NYLOC M10 X 1.5-8-AA1J		

194. Quantities: FD225 = 2, FD230 = 4, FD235 = 6, FD240 = 8, FD241 = 8, and FD245 = 8.

72 Hydraulics – Knife Drive, Double Knife, Left Side (FD250)

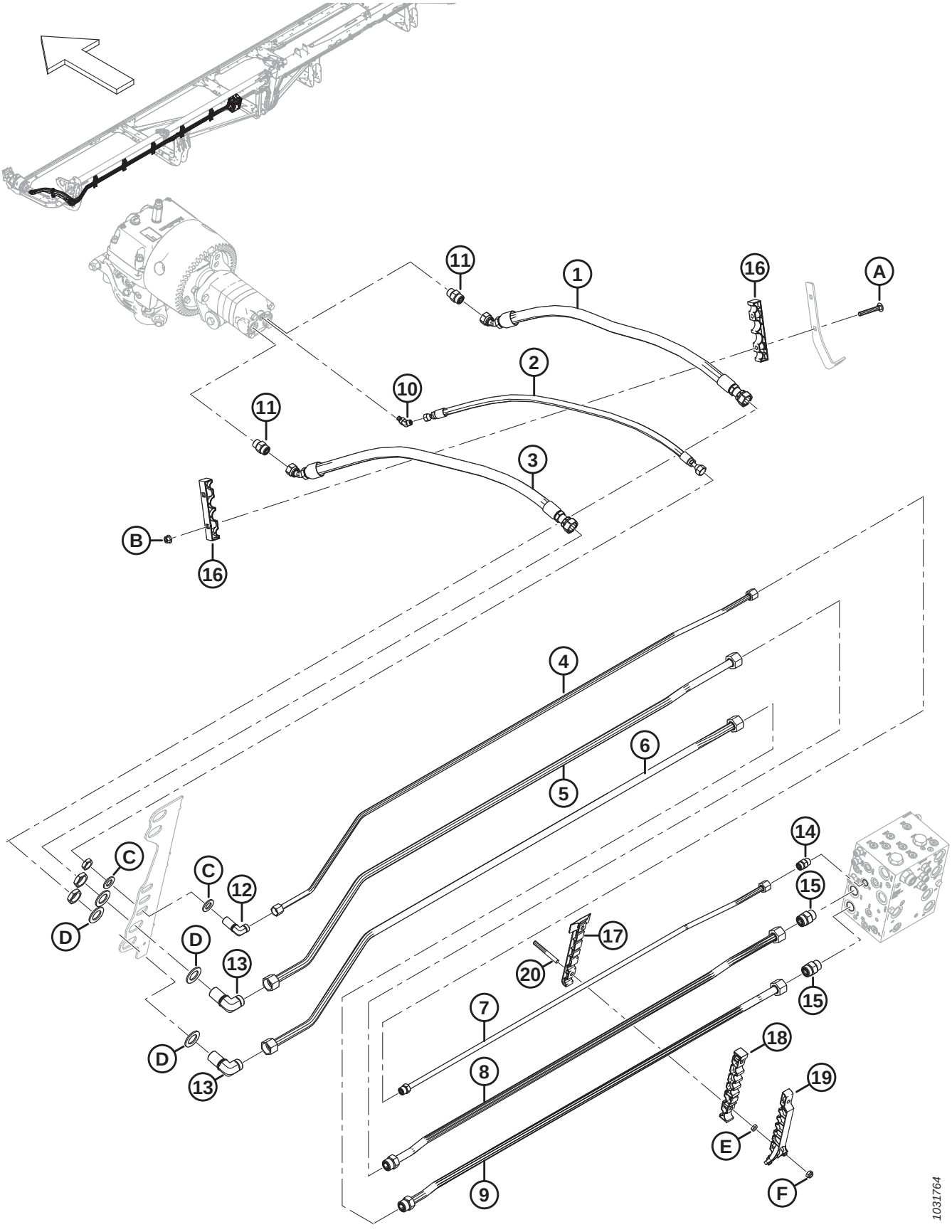

Ref	Part Number	Description	Qty	Serial Number
1	283063	HOSE – HYD	1	
2	283065	HOSE – HYD	1	
3	283202	HOSE – HYD	1	
4	283465	LINE – HYDRAULIC (FD250)	1	
5	283464	LINE – HYDRAULIC (FD250)	1	
6	283463	LINE – HYDRAULIC (FD250)	1	
7	283174	LINE – HYDRAULIC (FD250)	1	
	135866	O-RING – Ø1.78 X Ø12.42		
8	283173	LINE – HYDRAULIC (FD250)	1	
	135868	O-RING – Ø1.78 X Ø18.77		
9	283172	LINE – HYDRAULIC (FD250)	1	
	135868	O-RING – Ø1.78 X Ø18.77		
10	252307	FITTING – ELBOW 45° HYD	1	
	50223	O-RING – Ø1.83 X Ø8.92		
	135957	O-RING – Ø1.78 X Ø7.65		
11	184461	FITTING – ADAPTER HYD	2	
	44210	O-RING – Ø2.46 X Ø19.18		
	135867	O-RING – Ø1.78 X Ø15.60		
12	136244	FITTING – ELBOW 90° BULKHEAD HYD [195]	1	
	135866	O-RING – Ø1.78 X Ø12.42		
13	136245	FITTING – ELBOW 90° BULKHEAD HYD [195]	2	
	135868	O-RING – Ø1.78 X Ø18.77		
14	135780	FITTING – ADAPTER	1	
	44209	O-RING – Ø2.21 X Ø16.36		
	135866	O-RING – Ø1.78 X Ø12.42		
15	135788	FITTING – ADAPTER	2	
	30971	O-RING – Ø2.95 X Ø23.47		
	135868	O-RING – Ø1.78 X Ø18.77		
16	283984	CLAMP – LINE KNIFE	2	
17	283797	CLAMP – LINE BOTTOM LH	5	
18	283807	CLAMP – LINE MIDDLE LH	5	
19	311233	CLAMP – LINE TOP LH	5	
20	312654	STUD – THRD CLAMP PATCH WING	10	
A	136495	BOLT – RHSN M10 X 1.5 X 70-8.8-AA1J	2	
B	135799	NUT – HEX FLG CTR LOC M10 X 1.5-10	2	
C	18601	WASHER – FLAT SAE	2	
D	136355	WASHER – FLAT 2.0 IN OD ZP	4	
E	136442	NUT – HEX THIN M10 X 1.5-05-AA1J		
F	184692	NUT – HEX NYLOC M10 X 1.5-8-AA1J		

195. The fitting includes a securing nut.

73 Hydraulics – Knife Drive, Double Knife, Right Side (FD235, FD240, and FD241)

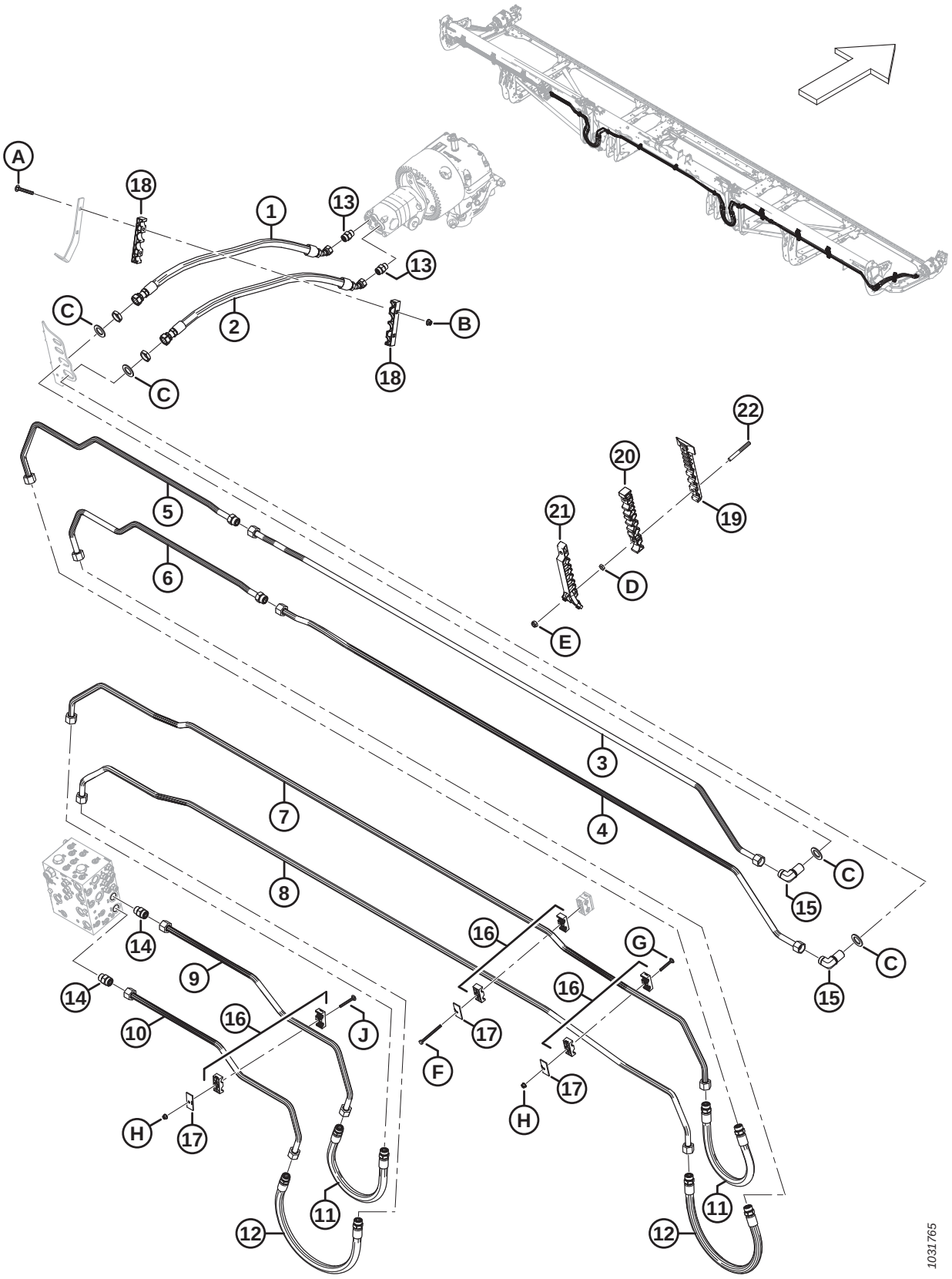

Ref	Part Number	Description	Qty	Serial Number
1	283202	HOSE – HYD	1	
2	283063	HOSE – HYD	1	
3	283413	LINE – HYDRAULIC (FD235–FD241)	1	
4	283412	LINE – HYDRAULIC (FD235–FD241)	1	
5	283203	LINE – HYDRAULIC (FD235)	1	
	283422	LINE – HYDRAULIC (FD240)	1	
	283427	LINE – HYDRAULIC (FD241)	1	
	135868	O-RING – Ø1.78 X Ø18.77		
6	283204	LINE – HYDRAULIC (FD235)	1	
	283421	LINE – HYDRAULIC (FD240)	1	
	283426	LINE – HYDRAULIC (FD241)	1	
	135868	O-RING – Ø1.78 X Ø18.77		
7	283036	LINE – HYDRAULIC (FD235–FD241)	1	
8	283035	LINE – HYDRAULIC (FD235–FD241)	1	
9	283069	LINE – HYDRAULIC (FD235–FD241)	1	
10	283068	LINE – HYDRAULIC (FD235–FD241)	1	
11	283070	HOSE – HYD	2	
	135868	O-RING – Ø1.78 X Ø18.77		
12	283378	HOSE – HYD	2	
	135868	O-RING – Ø1.78 X Ø18.77		
13	184461	FITTING – ADAPTER HYD	2	
	44210	O-RING Ø2.46 X Ø19.18		
	135867	O-RING Ø1.78 X Ø15.60		
14	135788	FITTING – ADAPTER	2	
	30971	O-RING – Ø2.95 X Ø23.47		
	135868	O-RING – Ø1.78 X Ø18.77		
15	136245	FITTING – ELBOW 90° BULKHEAD HYD [196]	2	
	135868	O-RING – Ø1.78 X Ø18.77		
16	232397	CLAMP – ASSY [197]	6	
17	232233	CLAMP – COVER PLATE	6	
18	283984	CLAMP – LINE KNIFE	2	
19	283797	CLAMP – LINE BOTTOM LH		
20	283807	CLAMP – LINE MIDDLE LH		
21	311233	CLAMP – LINE TOP LH		
22	312654	STUD – THRD CLAMP PATCH WING		
A	136495	BOLT – RHSN M10 X 1.5 X 70-8.8-AA1J		
B	135799	NUT – HEX FLG CTR LOC M10 X 1.5-10		
C	136355	WASHER – FLAT 2.0 IN OD ZP		
D	136442	NUT – HEX THIN M10 X 1.5-05-AA1J		
E	184692	NUT – HEX NYLOC M10 X 1.5-8-AA1J		

196. The fitting includes a securing nut (NSS).
197. The clamp assembly includes two clamp halves (NSS). It does NOT include the cover plate or hardware.

HYDRAULICS – KNIFE DRIVE, DOUBLE KNIFE, RIGHT SIDE (FD235, FD240, AND FD241)

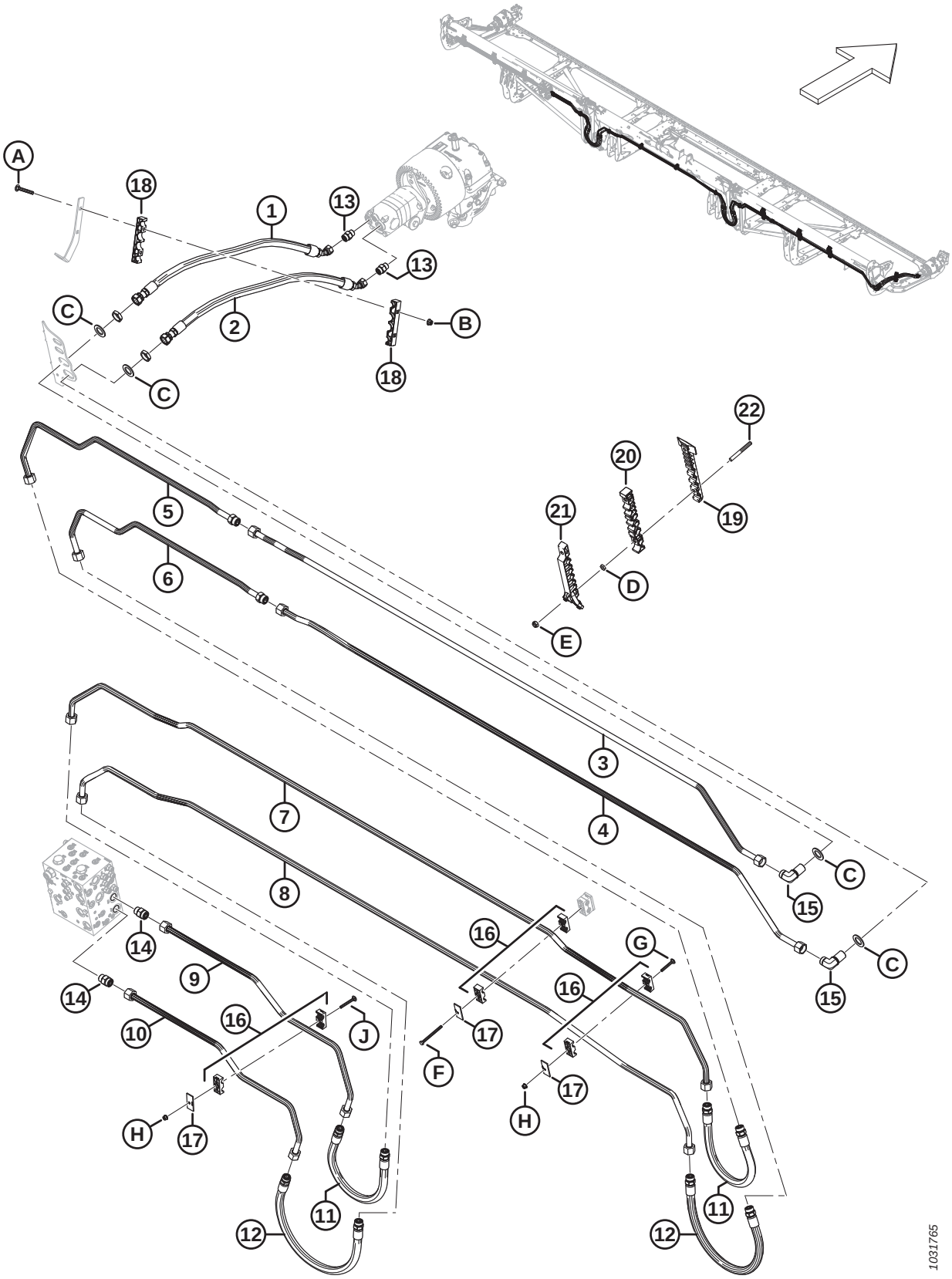

Ref	Part Number	Description	Qty	Serial Number
F	252002	BOLT – HEX HD M8 X 1.25 X 100-8.8-AA1J		
G	136486	BOLT – RHSN M8 X 1.25 X 60-8.8-AA1J		
H	135337	NUT – HEX FLG CTR LK M8 X 1.25-8-AA1J		
J	136779	BOLT – RHSN M8 X 1.25 X 70-8.8-AA1J		

74 Hydraulics – Knife Drive, Double Knife, Right Side (FD245 and FD250)

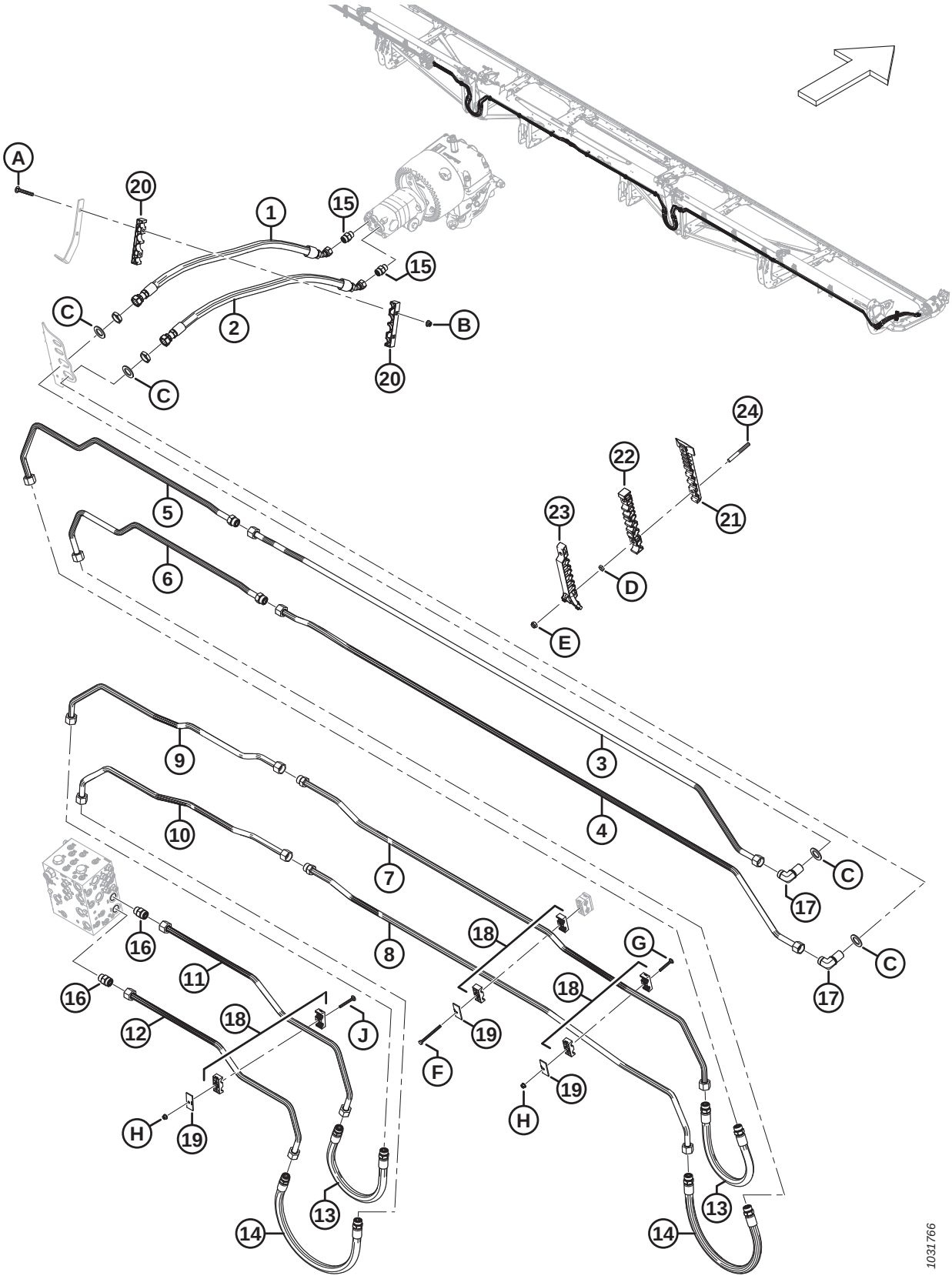

Ref	Part Number	Description	Qty	Serial Number
1	283202	HOSE – HYD	1	
2	283063	HOSE – HYD	1	
3	283413	LINE – HYDRAULIC (FD245 AND FD250)	1	
4	283412	LINE – HYDRAULIC (FD245 AND FD250)	1	
5	283422	LINE – HYDRAULIC (FD245)	1	
	283176	LINE – HYDRAULIC (FD250)	1	
	135868	O-RING – Ø1.78 X Ø18.77		
6	283421	LINE – HYDRAULIC (FD245)	1	
	283175	LINE – HYDRAULIC (FD250)	1	
	135868	O-RING – Ø1.78 X Ø18.77		
7	283443	LINE – HYDRAULIC (FD245 AND FD250)	1	
	135868	O-RING – Ø1.78 X Ø18.77		
8	283441	LINE – HYDRAULIC (FD245 AND FD250)	1	
	135868	O-RING – Ø1.78 X Ø18.77		
9	283442	LINE – HYDRAULIC (FD245 AND FD250)	1	
10	283440	LINE – HYDRAULIC (FD245 AND FD250)	1	
11	283069	LINE – HYDRAULIC (FD245 AND FD250)	1	
12	283068	LINE – HYDRAULIC (FD245 AND FD250)	1	
13	283070	HOSE – HYD	2	
	135868	O-RING – Ø1.78 X Ø18.77		
14	283378	HOSE – HYD	2	
	135868	O-RING – Ø1.78 X Ø18.77		
15	184461	FITTING – ADAPTER HYD	2	
	44210	O-RING Ø2.46 X Ø19.18		
	135867	O-RING Ø1.78 X Ø15.60		
16	135788	FITTING – ADAPTER	2	
	30971	O-RING – Ø2.95 X Ø23.47		
	135868	O-RING – Ø1.78 X Ø18.77		
17	136245	FITTING – ELBOW 90° BULKHEAD HYD [198]	2	
	135868	O-RING – Ø1.78 X Ø18.77		
18	232397	CLAMP – ASSY [199]	6	
19	232233	CLAMP – COVER PLATE	6	
20	283984	CLAMP – LINE KNIFE	2	
21	283797	CLAMP – LINE BOTTOM LH [200]		
22	283807	CLAMP – LINE MIDDLE LH [200]		
23	311233	CLAMP – LINE TOP LH [200]		
24	312654	STUD – THRD CLAMP PATCH WING [201]		
A	136495	BOLT – RHSN M10 X 1.5 X 70-8.8-AA1J		

198. The fitting includes a securing nut (NSS).
199. The clamp assembly includes two clamp halves (NSS). It does NOT include the cover plate or hardware.
200. Quantities: FD245 = 4 and FD250 = 4.
201. Quantities: FD245 = 8 and FD250 = 8.

HYDRAULICS – KNIFE DRIVE, DOUBLE KNIFE, RIGHT SIDE (FD245 AND FD250)

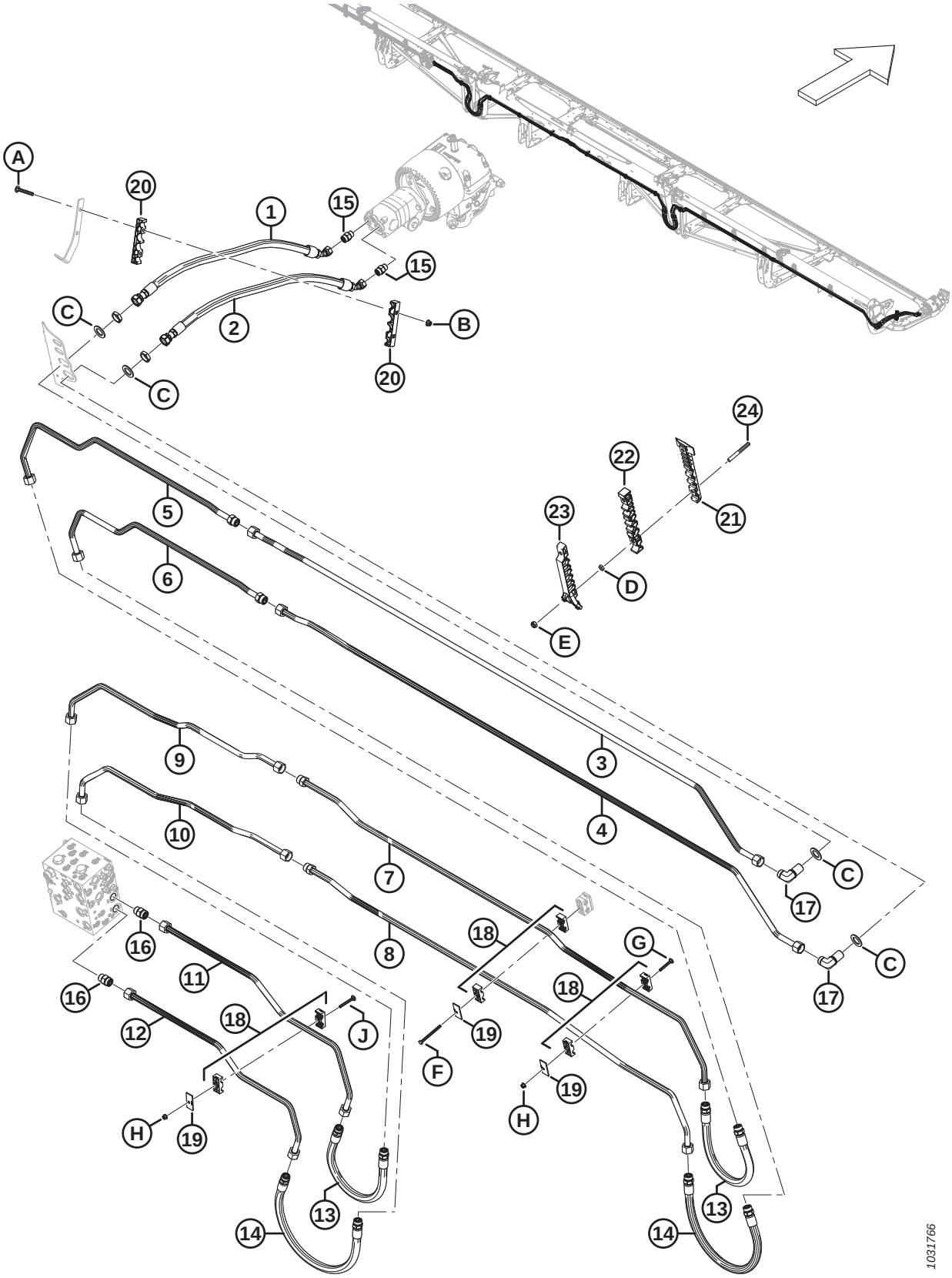

Ref	Part Number	Description	Qty	Serial Number
B	135799	NUT – HEX FLG CTR LOC M10 X 1.5-10		
C	136355	WASHER – FLAT 2.0 IN OD ZP		
D	136442	NUT – HEX THIN M10 X 1.5-05-AA1J		
E	184692	NUT – HEX NYLOC M10 X 1.5-8-AA1J		
F	252002	BOLT – HEX HD M8 X 1.25 X 100-8.8-AA1J		
G	136486	BOLT – RHSN M8 X 1.25 X 60-8.8-AA1J		
H	135337	NUT – HEX FLG CTR LK M8 X 1.25-8-AA1J		
J	136779	BOLT – RHSN M8 X 1.25 X 70-8.8-AA1J		

75 Hydraulics – Draper Drive (FD225, FD230, FD235, FD240, and FD241)

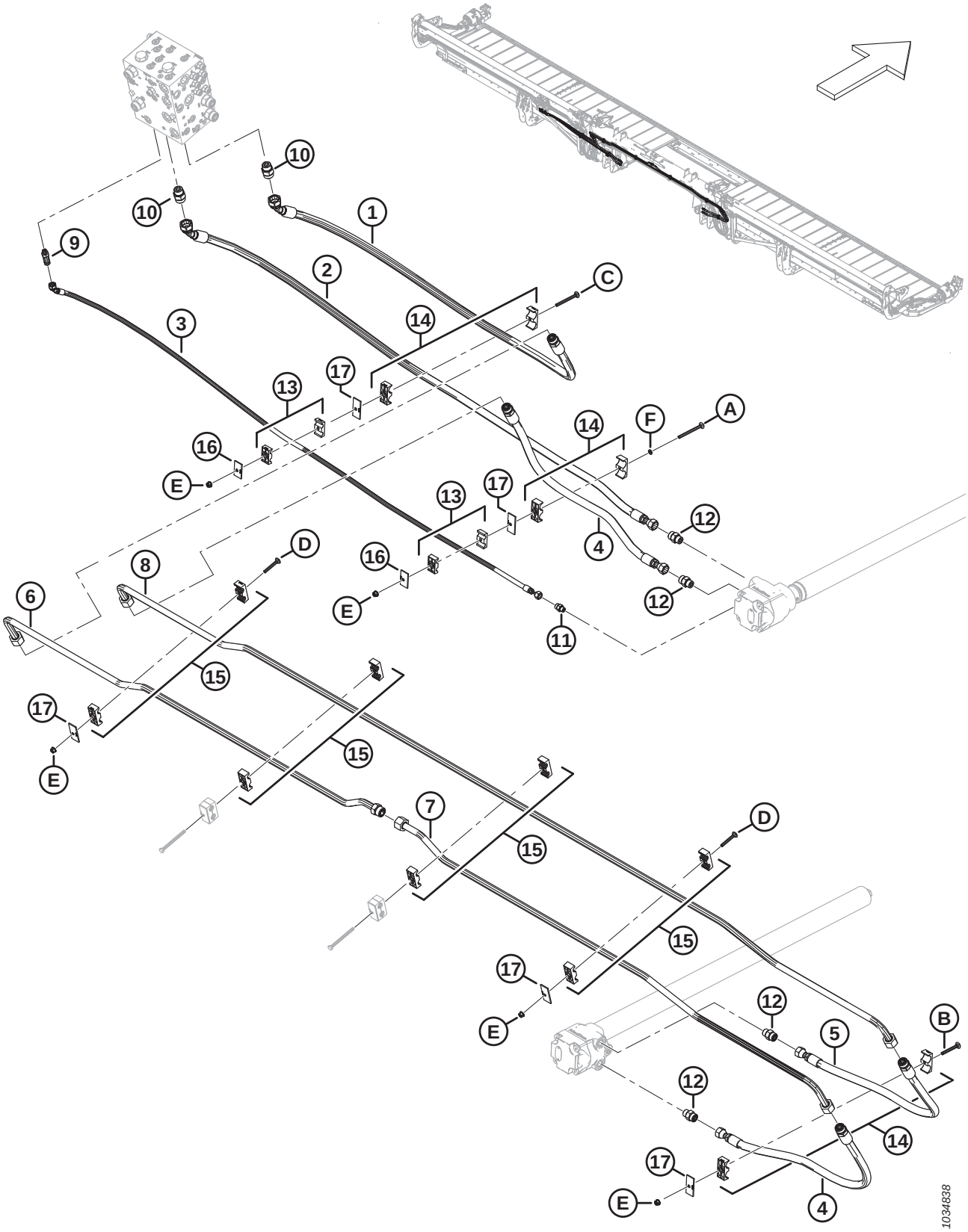

Ref	Part Number	Description	Qty	Serial Number
1	283099	HOSE – HYD	1	
	135868	O-RING – Ø1.78 X Ø18.77		
2	283098	HOSE – HYD	1	
3	283109	HOSE – HYD	1	
4	283091	HOSE – HYD	2	
	135868	O-RING – Ø1.78 X Ø18.77		
5	283108	HOSE – HYD	1	
	135868	O-RING – Ø1.78 X Ø18.77		
6	283038	LINE – HYDRAULIC	1	
	135868	O-RING – Ø1.78 X Ø18.77		
7	283039	LINE – HYDRAULIC	1	
8	283037	LINE – HYDRAULIC	1	
9	252902	FITTING – HYD CONNECTOR, LONG (CD)	1	
	50219	O-RING – Ø1.98 X Ø11.89		
	135865	O-RING – Ø1.78 X Ø9.25		
10	135788	FITTING – ADAPTER (DP, DR)	2	
	30971	O-RING – Ø2.95 X Ø23.47		
	135868	O-RING – Ø1.78 X Ø18.77		
11	135778	FITTING – ADAPTER	1	
	50219	O-RING – Ø1.98 X Ø11.89		
	135865	O-RING – Ø1.78 X Ø9.25		
12	184461	FITTING – ADAPTER HYD	4	
	44210	O-RING – Ø2.46 X Ø19.18		
	135867	O-RING – Ø1.78 X Ø15.60		
13	232395	CLAMP – ASSY [202]	2	
14	232219	CLAMP – ASSY [202]	3	
15	232397	CLAMP – ASSY [202]	4	
16	184303	CLAMP – COVER PLATE	2	
17	232233	CLAMP – COVER PLATE	5	
A	320274	BOLT – RHSN SPCL M8 X 1.25 X 100-8.8-ZINC		
B	136779	BOLT – RHSN M8 X 1.25 X 70-8.8-AA1J		
C	136746	BOLT – RHSN M8 X 1.25 X 90-8.8-AA1J		
D	136486	BOLT – RHSN M8 X 1.25 X 60-8.8-AA1J		
E	135337	NUT – HEX FLG CTR LK M8 X 1.25-8-AA1J		
F	184721	WASHER – NYLON RETAINING 1/4 IN.		

202. The clamp assembly includes two clamp halves (NSS). It does NOT include the cover plate or hardware.

76 Hydraulics – Draper Drive (FD245 and FD250)

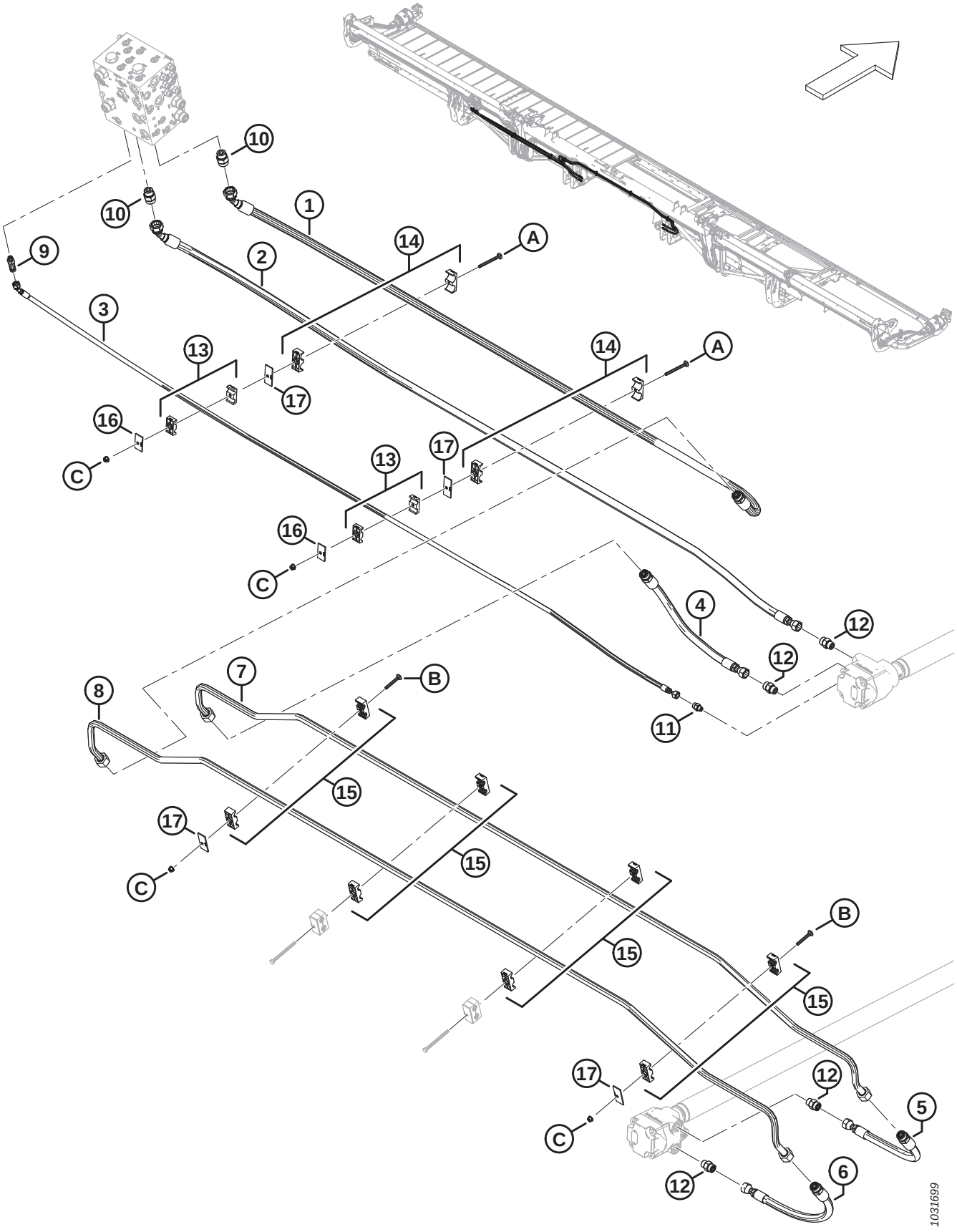

Ref	Part Number	Description	Qty	Serial Number
1	283562	HOSE – HYD	1	
	135868	O-RING – Ø1.78 X Ø18.77		
2	283561	HOSE – HYD	1	
3	283566	HOSE – HYD	1	
4	283563	HOSE – HYD	1	
	135868	O-RING – Ø1.78 X Ø18.77		
5	283564	HOSE – HYD	1	
	135868	O-RING – Ø1.78 X Ø18.77		
6	283565	HOSE – HYD	1	
	135868	O-RING – Ø1.78 X Ø18.77		
7	283508	LINE – HYDRAULIC	1	
8	283509	LINE – HYDRAULIC	1	
9	252902	FITTING – HYD CONNECTOR, LONG	1	
	50219	O-RING – Ø1.98 X Ø11.89		
	135865	O-RING – Ø1.78 X Ø9.25		
10	135788	FITTING – ADAPTER	2	
	30971	O-RING – Ø2.95 X Ø23.47		
	135868	O-RING – Ø1.78 X Ø18.77		
11	135778	FITTING – ADAPTER	1	
	50219	O-RING – Ø1.98 X Ø11.89		
	135865	O-RING – Ø1.78 X Ø9.25		
12	184461	FITTING – ADAPTER HYD	4	
	44210	O-RING – Ø2.46 X Ø19.18		
	135867	O-RING – Ø1.78 X Ø15.60		
13	232395	CLAMP – ASSY [203]	2	
14	232219	CLAMP – ASSY [203]	2	
15	232397	CLAMP – ASSY [203]	4	
16	184303	CLAMP – COVER PLATE	2	
17	232233	CLAMP – COVER PLATE	4	
A	136746	BOLT – RHSN M8 X 1.25 X 90-8.8-AA1J	2	
B	136486	BOLT – RHSN M8 X 1.25 X 60-8.8-AA1J	2	
C	135337	NUT – HEX FLG CTR LK M8 X 1.25-8-AA1J	4	

203. The clamp assembly includes two clamp halves (NSS). It does NOT include the cover plate or hardware.

77 Hydraulics – Lift and Fore-Aft, Single Reel, Left Arm (FD225)

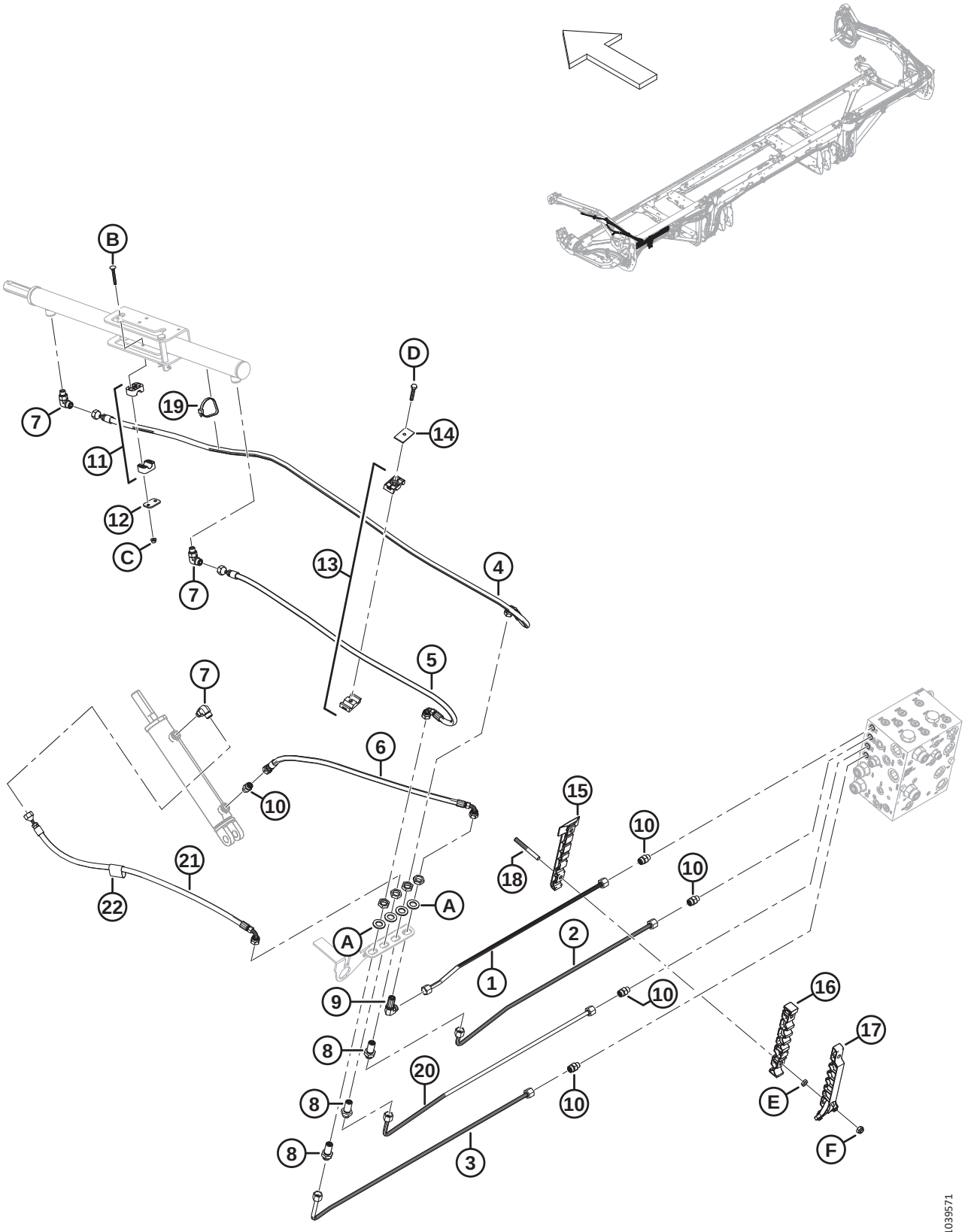

Ref	Part Number	Description	Qty	Serial Number
1	283249	LINE – HYDRAULIC (FD225)	1	
2	283248	LINE – HYDRAULIC (FD225)	1	
3	283246	LINE – HYDRAULIC (FD225)	1	
4	283057	HOSE – HYD	1	
5	283058	HOSE – HYD	1	
6	283059	HOSE – HYD	1	
7	136095	FITTING – ELBOW 90° HYD	3	
8	136145	FITTING – BULKHEAD UNION HYD [204]	3	
9	136150	FITTING – ELBOW 90° BLKHD HYD [204]	1	
10	135778	FITTING – ADAPTER	5	
11	283791	CLAMP – ASSY [205]	1	
12	255461	PLATE – COVER	1	
13	232395	CLAMP – ASSY [205]	1	
14	184303	CLAMP – COVER PLATE	1	
15	283797	CLAMP – LINE BOTTOM LH	1	
16	283807	CLAMP – LINE MIDDLE LH	1	
17	311233	CLAMP – LINE TOP LH	1	
18	312654	STUD – THRD CLAMP PATCH WING	2	
19	30753	FASTENER – CABLE TIE, BLACK	1	
20	283247	LINE – HYDRAULIC (FD225)	1	
21	283060	HOSE – HYD	1	
22	135443	CINCH STRAP – 4 IN. LG	1	
A	136540	WASHER – FLAT		
B	184644	BOLT – RHSN M6 X 1 X 50-8.8-ZINC		
C	152668	NUT – HEX FLG CTR LOC M6 X 1-8		
D	30660	BOLT – HEX HD M8 X 1.25 X 45-8.8-AA1J		
E	136442	NUT – HEX THIN M10 X 1.5-05-AA1J		
F	184692	NUT – HEX NYLOC M10 X 1.5-8-AA1J		

204. The fitting includes a securing nut (NSS).
205. The clamp assembly includes two clamp halves (NSS). It does NOT include the cover plate or hardware.

78 Hydraulics – Lift and Fore-Aft, Single Reel, Right Arm (FD225)

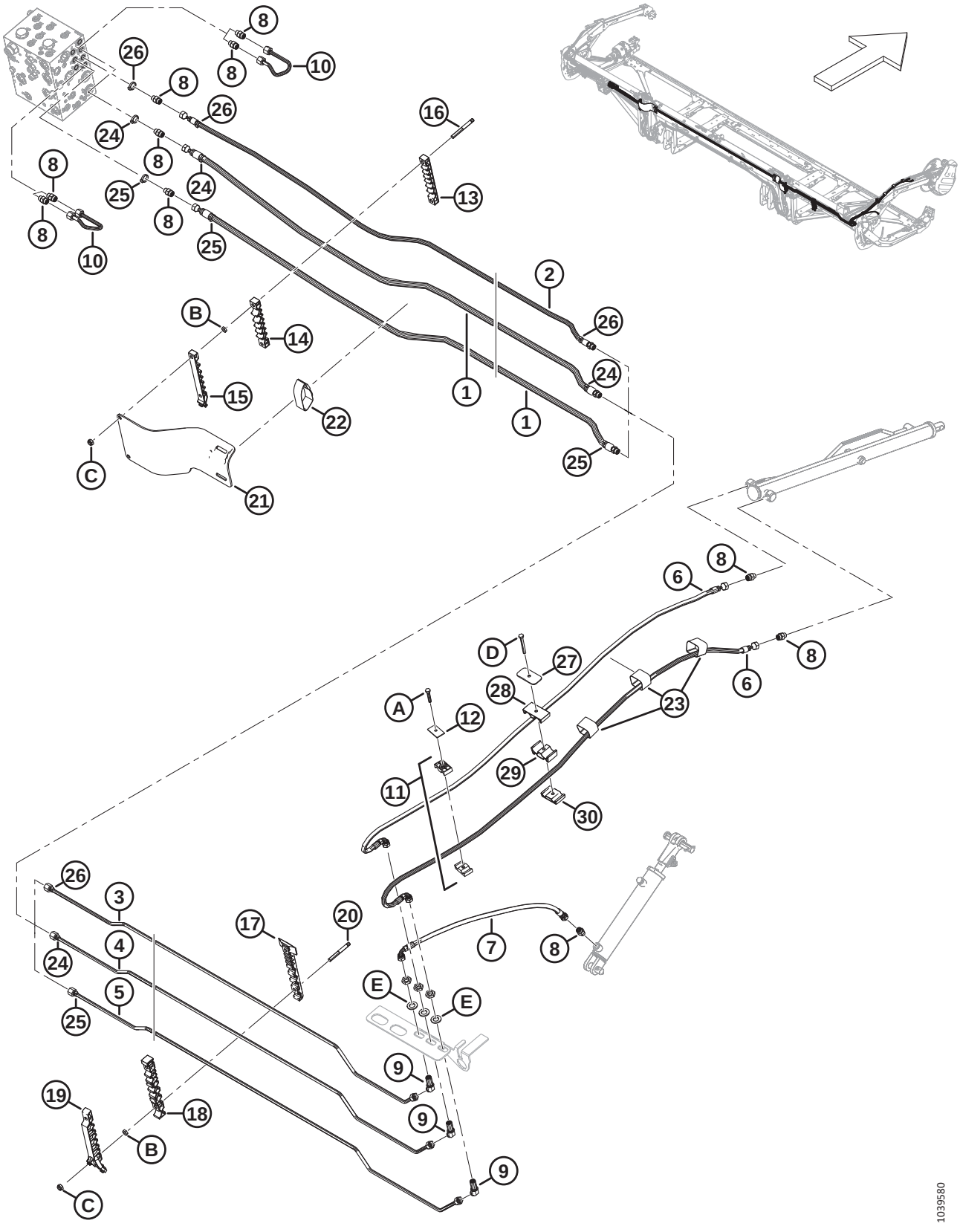

Ref	Part Number	Description	Qty	Serial Number
1	283096	HOSE – HYD	2	
	135865	O-RING Ø1.78 X Ø9.25		
2	323356	HOSE – HYD	1	
3	323343	LINE – HYDRAULIC (FD225)	1	
4	323344	LINE – HYDRAULIC (FD225)	1	
5	323345	LINE – HYDRAULIC (FD225)	1	
6	283327	HOSE – HYD	2	
7	283059	HOSE – HYD	1	
8	135778	FITTING – ADAPTER	10	
9	136146	FITTING – ELBOW 45° BLKHD HYD [206]	3	
10	283251	LINE – HYDRAULIC	2	
11	232395	CLAMP – ASSY [207]	1	
12	184303	CLAMP – COVER PLATE	1	
13	283909	CLAMP – LINE TOP FLEX LH	1	
	283906	CLAMP – LINE TOP FLEX RH	1	
14	283910	CLAMP – LINE MIDDLE FLEX LH	1	
	283907	CLAMP – LINE MIDDLE FLEX RH	1	
15	311461	CLAMP – LINE TOP FLEX LH	1	
	311462	CLAMP – LINE TOP FLEX RH	1	
16	312655	STUD – THRD CLAMP PATCH BLACK	2	
17	283820	CLAMP – LINE BOTTOM RH	1	
18	283818	CLAMP – LINE MIDDLE RH	1	
19	311451	CLAMP – LINE TOP RH	1	
20	312654	STUD – THRD CLAMP PATCH WING	4	
21	311354	SHIELD – HOSE TRANSITION LH	1	
	311360	SHIELD – HOSE TRANSITION RH	1	
22	170851	CINCH STRAP – 10 IN. LG	2	
23	135444	CINCH STRAP – 4 IN. LG	3	
24	40704	CABLE TIE – ORANGE	4	
25	40702	CABLE TIE – RED	4	
26	21763	CABLE TIE – BLACK	4	
27	323023	PLATE – CLAMP CENTER REEL ARM	1	
28	283989	PLATE – HOSE REEL TOP	1	
29	283988	PLATE – HOSE REEL MIDDLE	1	
30	283987	PLATE – HOSE REEL BOTTOM	1	
A	30660	BOLT – HEX HD M8 X 1.25 X 45-8.8-AA1J		
B	136442	NUT – HEX THIN M10 X 1.5-05-AA1J		
C	184692	NUT – HEX NYLOC M10 X 1.5-8-AA1J		
D	184656	BOLT – HEX HD M8 X 1.25 X 70-8.8-AA1J		
E	136540	WASHER – FLAT		

206. The fitting includes a securing nut (NSS).
207. The clamp assembly includes two clamp halves (NSS). It does NOT include the cover plate or hardware.

79 Hydraulics – Lift and Fore-Aft, Double Reel, Left Arm (FD230, FD235, FD240, and FD241)

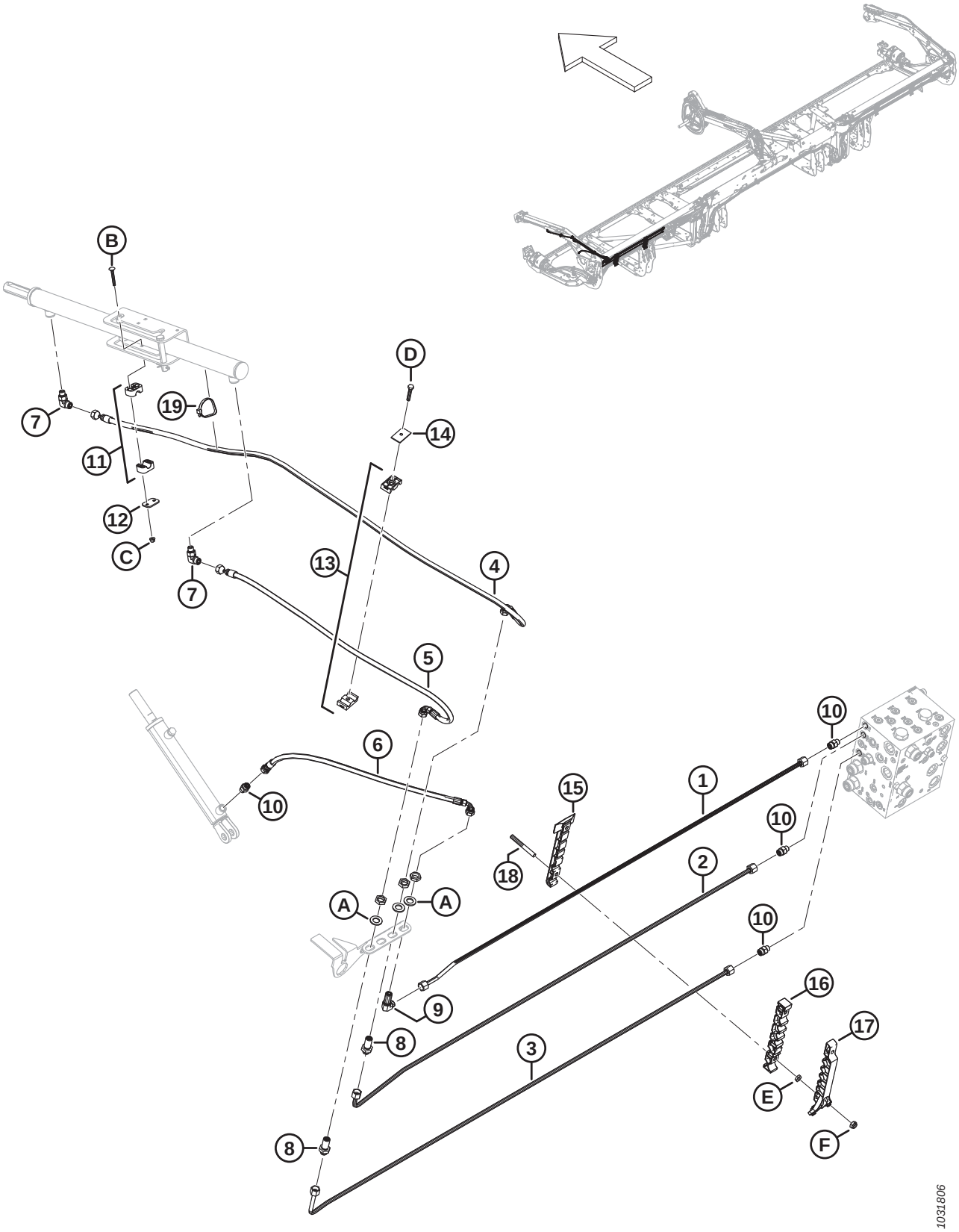

Ref	Part Number	Description	Qty	Serial Number
1	283056	LINE – HYDRAULIC (FD230)	1	
	283144	LINE – HYDRAULIC (FD235)	1	
	283420	LINE – HYDRAULIC (FD240)	1	
	283183	LINE – HYDRAULIC (FD241)	1	
2	283055	LINE – HYDRAULIC (FD230)	1	
	283143	LINE – HYDRAULIC (FD235)	1	
	283419	LINE – HYDRAULIC (FD240)	1	
	283182	LINE – HYDRAULIC (FD241)	1	
3	283053	LINE – HYDRAULIC (FD230)	1	
	283141	LINE – HYDRAULIC (FD235)	1	
	283417	LINE – HYDRAULIC (FD240)	1	
	283180	LINE – HYDRAULIC (FD241)	1	
4	283057	HOSE – HYD (FD230–FD241)	1	
5	283058	HOSE – HYD (FD230–FD241)	1	
6	283059	HOSE – HYD (FD230–FD241)	1	
7	136095	FITTING – ELBOW 90° HYD	2	
8	136145	FITTING – BULKHEAD UNION HYD [208]	2	
9	136150	FITTING – ELBOW 90° BLKHD HYD [208]	1	
10	135778	FITTING – ADAPTER	4	
11	283791	CLAMP – ASSY [209]	1	
12	255461	PLATE – COVER	1	
13	232395	CLAMP – ASSY [209]	1	
14	184303	CLAMP – COVER PLATE	1	
15	283797	CLAMP – LINE BOTTOM LH [210]		
16	283807	CLAMP – LINE MIDDLE LH [210]		
17	311233	CLAMP – LINE TOP LH [210]		
18	312654	STUD – THRD CLAMP PATCH WING [211]		
19	30753	FASTENER – CABLE TIE, BLACK	1	
A	136540	WASHER – FLAT		
B	184644	BOLT – RHSN M6 X 1 X 50-8.8-ZINC		
C	152668	NUT – HEX FLG CTR LOC M6 X 1-8		
D	30660	BOLT – HEX HD M8 X 1.25 X 45-8.8-AA1J		
E	136442	NUT – HEX THIN M10 X 1.5-05-AA1J		
F	184692	NUT – HEX NYLOC M10 X 1.5-8-AA1J		

208. The fitting includes a securing nut (NSS).
209. The clamp assembly includes two clamp halves (NSS). It does NOT include the cover plate or hardware.
210. Quantities: FD230 = 2, FD235 = 3, FD240 = 4, and FD241 = 4.
211. Quantities: FD230 = 4, FD235 = 6, FD240 = 8, and FD241 = 8.

80 Hydraulics – Lift and Fore-Aft, Double Reel, Center Arm (FD230, FD235, FD240, and FD241)

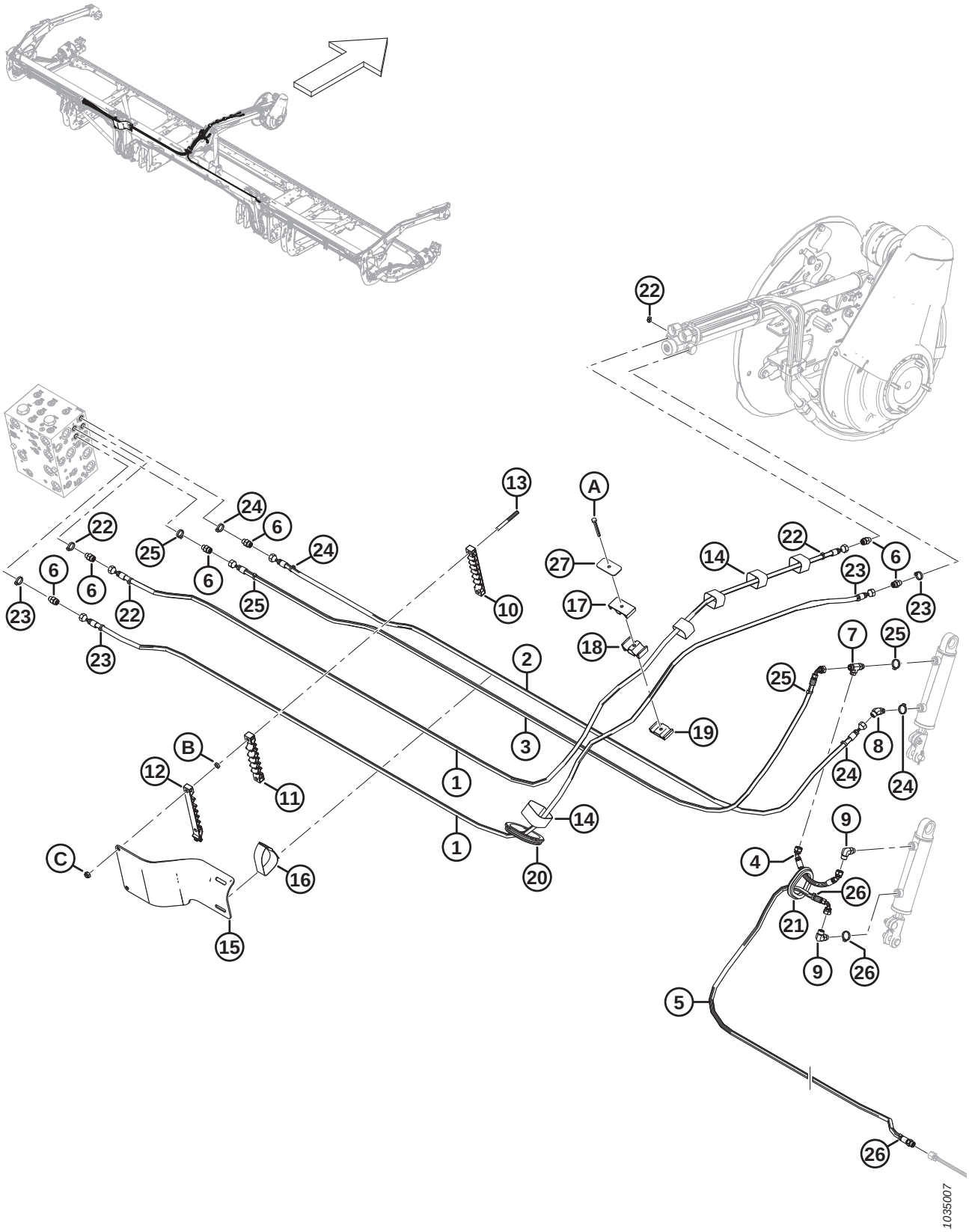

Ref	Part Number	Description	Qty	Serial Number
1	323660	HOSE – HYD, 1/4 IN ID, 4230 MM LG, 100R17	2	
2	323659	HOSE – HYD, 1/4 IN ID, 3060 MM LG, 100R17	1	
3	323661	HOSE – HYD, 1/4 IN ID, 3215 MM LG, 100R17	1	
4	283785	HOSE – HYD, 1/4 IN ID, 240 MM LG, 100R17	1	
5	323663	HOSE – HYD, 1/4 IN ID, 2750 MM LG, 100R17	1	
	135865	O-RING Ø1.78 X Ø9.25		
6	135778	FITTING – ADAPTER	6	
7	136240	FITTING – TEE HYD	1	
8	136144	FITTING – ELBOW 45° HYD	1	
9	136095	FITTING – ELBOW 90° HYD	2	
10	283909	CLAMP – LINE BOTTOM FLEX LH	1	
11	283910	CLAMP – LINE MIDDLE FLEX LH	1	
12	311461	CLAMP – LINE TOP FLEX LH	1	
13	312655	STUD – THRD CLAMP PATCH BLACK	2	
14	135444	CINCH STRAP – 6 IN. LG	5	
15	311354	SHIELD – HOSE TRANSITION LH	1	
16	295929	CINCH STRAP – 12 IN. LG	1	
17	283989	CLAMP – HOSE REEL TOP	1	
18	283988	CLAMP – HOSE REEL MIDDLE	1	
19	283987	CLAMP – HOSE REEL BOTTOM	1	
20	125377	GROMMET – 91 MM I.D.	1	
21	283889	GROMMET – RUBBER	1	
22	40704	FASTENER – CABLE TIE, ORANGE	4	
23	40702	FASTENER – CABLE TIE, RED	4	
24	252795	FASTENER – CABLE TIE, PINK	4	
25	21763	FASTENER – CABLE TIE, BLACK	4	
26	252794	FASTENER – CABLE TIE, PURPLE	3	
27	323023	PLATE – CLAMP CENTER REEL ARM	1	
A	184656	BOLT – HEX HD M8 X 1.25 X 70-8.8-AA1J		
B	136442	NUT – HEX THIN M10 X 1.5-05-AA1J		
C	184692	NUT – HEX NYLOC M10 X 1.5-8-AA1J		

81 Hydraulics – Lift and Fore-Aft, Double Reel, Right Arm (FD230 and FD235)

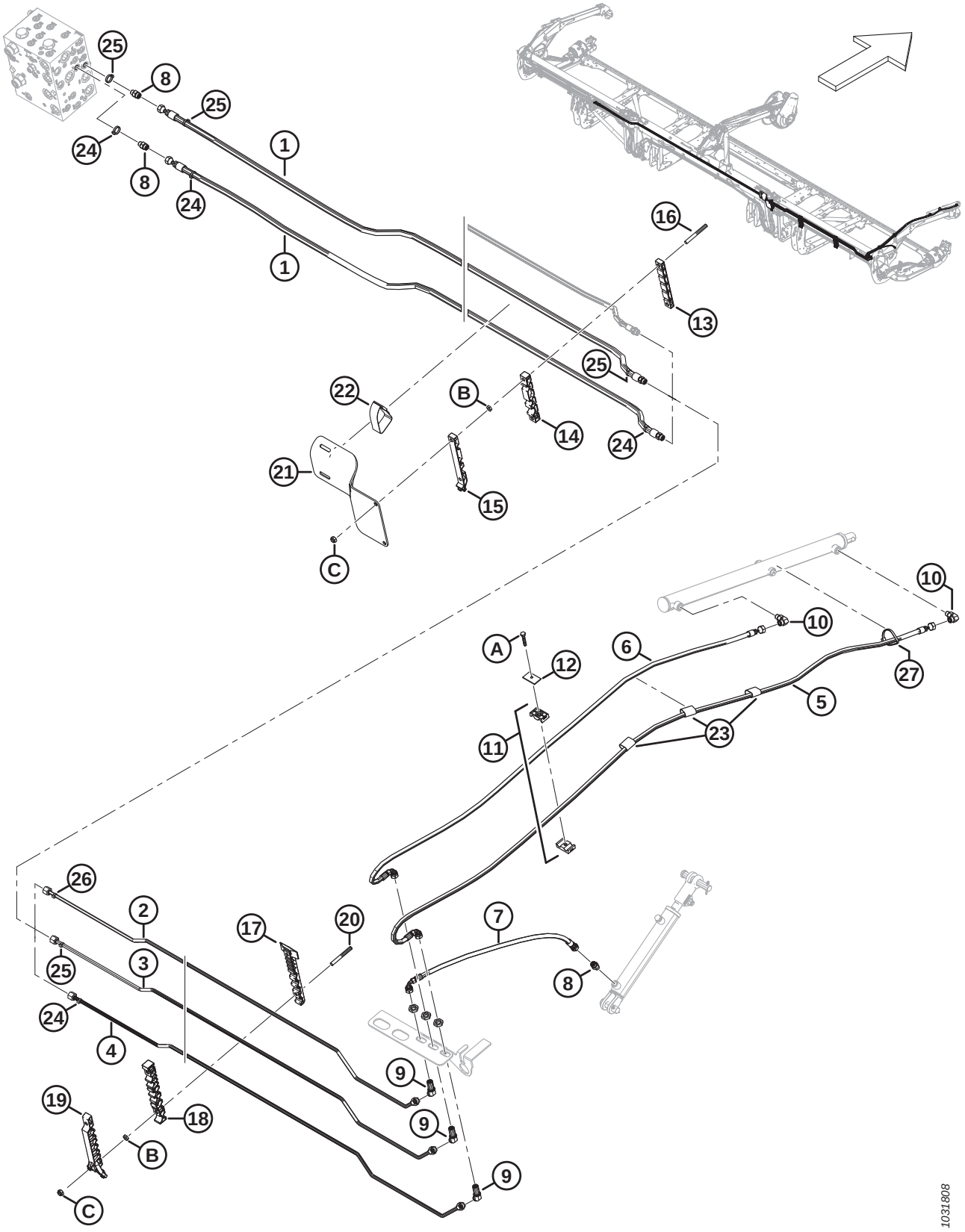

Ref	Part Number	Description	Qty	Serial Number
1	283096	HOSE – HYD	2	
	135865	O-RING Ø1.78 X Ø9.25		
2	283078	LINE – HYDRAULIC (FD230)	1	
	283145	LINE – HYDRAULIC (FD235)	1	
3	283079	LINE – HYDRAULIC (FD230)	1	
	283146	LINE – HYDRAULIC (FD235)	1	
4	283080	LINE – HYDRAULIC (FD230)	1	
	283147	LINE – HYDRAULIC (FD235)	1	
5	283074	HOSE – HYD	1	
6	283075	HOSE – HYD	1	
7	283059	HOSE – HYD	1	
8	135778	FITTING – ADAPTER	3	
9	136146	FITTING – ELBOW 45° BLKHD HYD [212]	3	
10	136095	FITTING – ELBOW 90° HYD	2	
11	232395	CLAMP – ASSY [213]	2	
12	184303	CLAMP – COVER PLATE	2	
13	283906	CLAMP – LINE TOP FLEX RH	1	
14	283907	CLAMP – LINE MIDDLE FLEX RH	1	
15	311462	CLAMP – LINE TOP FLEX RH	1	
16	312655	STUD – THRD CLAMP PATCH BLACK	2	
17	283820	CLAMP – LINE BOTTOM RH [214]		
18	283818	CLAMP – LINE MIDDLE RH [214]		
19	311451	CLAMP – LINE TOP RH [214]		
20	312654	STUD – THRD CLAMP PATCH WING [215]		
21	311360	SHIELD – HOSE TRANSITION RH	1	
22	170851	CINCH STRAP – 10 IN. LG	1	
23	135443	CINCH STRAP – 4 IN. LG	3	
24	49227	FASTENER – CABLE TIE, GREEN	4	
25	135266	FASTENER – CABLE TIE, LIGHT BLUE	4	
26	252794	FASTENER – CABLE TIE, PURPLE	1	
27	30753	FASTENER – CABLE TIE, BLACK	1	
A	30660	BOLT – HEX HD M8 X 1.25 X 45-8.8-AA1J		
B	136442	NUT – HEX THIN M10 X 1.5-05-AA1J		
C	184692	NUT – HEX NYLOC M10 X 1.5-8-AA1J		

212. The fitting includes a securing nut (NSS).
213. The clamp assembly includes two clamp halves (NSS). It does NOT include the cover plate or hardware.
214. Quantities: FD230 = 2, FD235 = 3.
215. Quantities: FD230 = 4, FD235 = 6.

82 Hydraulics – Lift and Fore-Aft, Double Reel, Right Arm (FD240 and FD241)

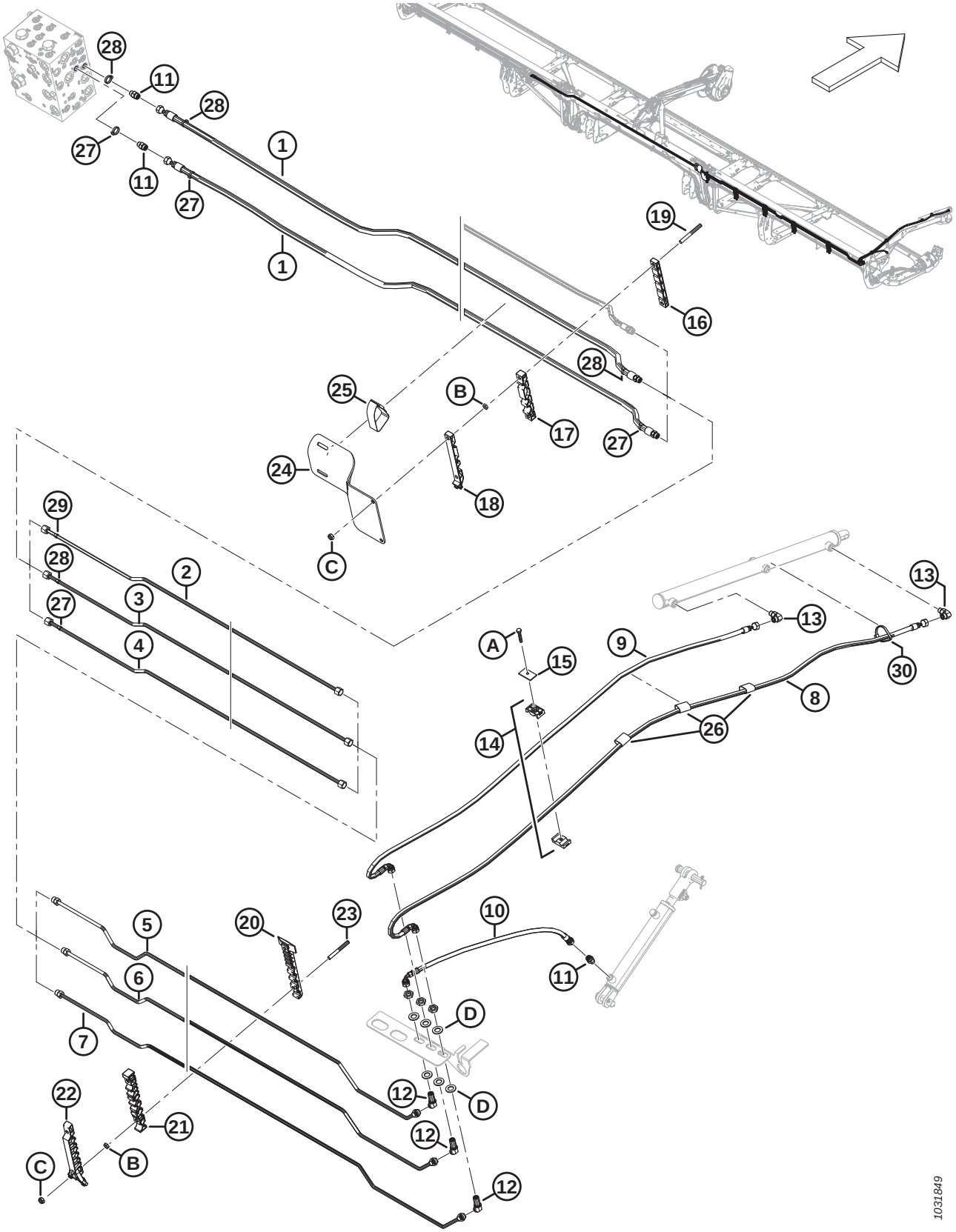

Ref	Part Number	Description	Qty	Serial Number
1	283096	HOSE – HYD	2	
	135865	O-RING Ø1.78 X Ø9.25		
2	283428	LINE – HYDRAULIC (FD240)	1	
	283184	LINE – HYDRAULIC (FD241)	1	
3	283429	LINE – HYDRAULIC ((FD240)	1	
	283185	LINE – HYDRAULIC (FD241)	1	
4	283430	LINE – HYDRAULIC (FD240)	1	
	283186	LINE – HYDRAULIC (FD241)	1	
5	283431	LINE – HYDRAULIC	1	
	135865	O-RING Ø1.78 X Ø9.25		
6	283432	LINE – HYDRAULIC	1	
	135865	O-RING Ø1.78 X Ø9.25		
7	283433	LINE – HYDRAULIC	1	
	135865	O-RING Ø1.78 X Ø9.25		
8	283074	HOSE – HYD	1	
9	283075	HOSE – HYD	1	
10	283059	HOSE – HYD	1	
11	135778	FITTING – ADAPTER	3	
12	136146	FITTING – ELBOW 45° BLKHD HYD [216]	3	
13	136095	FITTING – ELBOW 90° HYD	2	
14	232395	CLAMP – ASSY [217]	2	
15	184303	CLAMP – COVER PLATE	2	
16	283906	CLAMP – LINE TOP FLEX RH	1	
17	283907	CLAMP – LINE MIDDLE FLEX RH	1	
18	311462	CLAMP – LINE TOP FLEX RH	1	
19	312655	STUD – THRD CLAMP PATCH BLACK	2	
20	283820	CLAMP – LINE BOTTOM RH [218]		
21	283818	CLAMP – LINE MIDDLE RH [218]		
22	311451	CLAMP – LINE TOP RH [218]		
23	312654	STUD – THRD CLAMP PATCH WING [219]		
24	311360	SHIELD – HOSE TRANSITION RH	1	
25	170851	CINCH STRAP – 10 IN. LG	1	
26	135443	CINCH STRAP – 4 IN. LG	3	
27	49227	FASTENER – CABLE TIE, GREEN	4	
28	135266	FASTENER – CABLE TIE, LIGHT BLUE	4	
29	252794	FASTENER – CABLE TIE, PURPLE	1	
30	30753	FASTENER – CABLE TIE, BLACK	1	
A	30660	BOLT – HEX HD M8 X 1.25 X 45-8.8-AA1J		
B	136442	NUT – HEX THIN M10 X 1.5-05-AA1J		

216. The fitting includes a securing nut (NSS).
217. The clamp assembly includes two clamp halves (NSS). It does NOT include the cover plate or hardware.
218. Quantities: FD240 = 4, FD241 = 4.
219. Quantities: FD240 = 8, FD241 = 8.

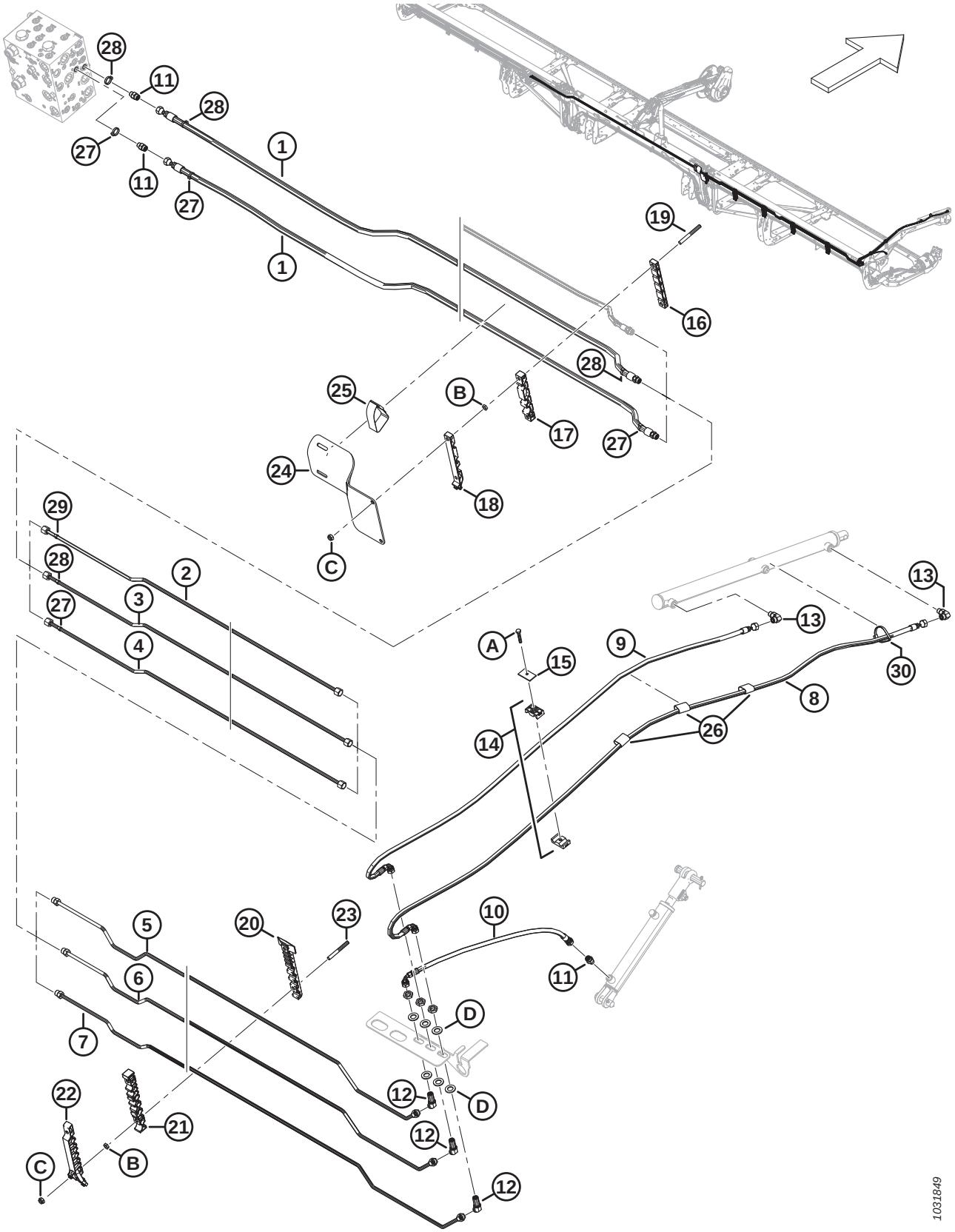
28
11
28
27
11
27
1
1
19
16
28
25
B
17
27
24
18
C
29
28
27
2
3
4
A
15
9
13
13
30
8
26
14
5
6
7
20
23
10
11
D
D
12
12
12
22
21
C
B
1031849

Ref	Part Number	Description	Qty	Serial Number
C	184692	NUT – HEX NYLOC M10 X 1.5-8-AA1J		
D	136540	WASHER – FLAT		

83 Hydraulics – Lift and Fore-Aft, Triple Reel, Left Arm (FD240, FD245, and FD250)

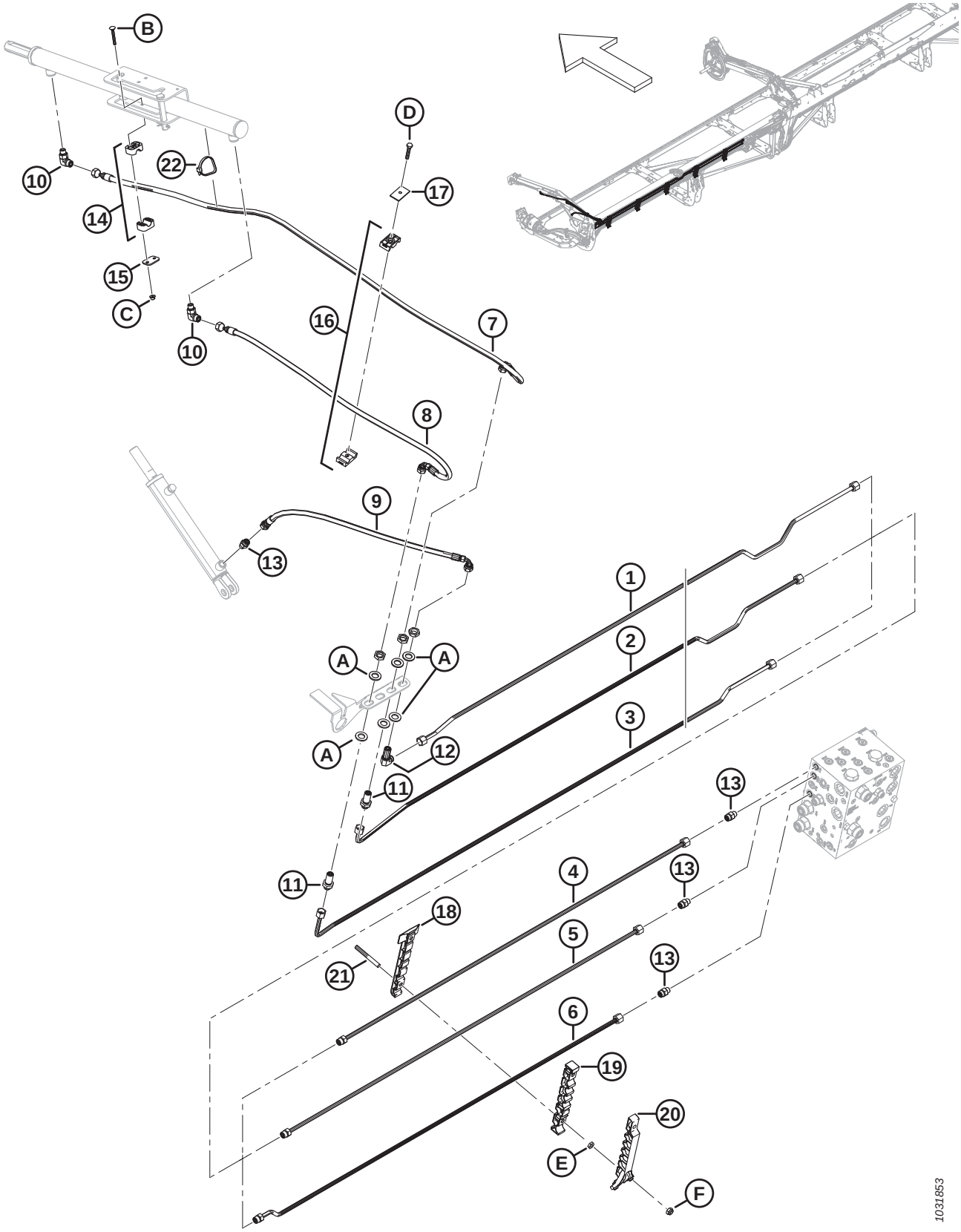

Ref	Part Number	Description	Qty	Serial Number
1	283420	LINE – HYDRAULIC (FD240 AND FD245)	1	
	283824	LINE – HYDRAULIC (FD250)	1	
2	283419	LINE – HYDRAULIC (FD240 AND FD245)	1	
	283823	LINE – HYDRAULIC (FD250)	1	
3	283417	LINE – HYDRAULIC (FD240 AND FD245)	1	
	283822	LINE – HYDRAULIC (FD250)	1	
4	283450	LINE – HYDRAULIC (FD250) [220]	1	
	135865	O-RING Ø1.78 X Ø9.25		
5	283449	LINE – HYDRAULIC (FD250) [220]	1	
	135865	O-RING Ø1.78 X Ø9.25		
6	283447	LINE – HYDRAULIC (FD250) [220]	1	
	135865	O-RING Ø1.78 X Ø9.25		
7	283057	HOSE – HYD	1	
8	283058	HOSE – HYD	1	
9	283059	HOSE – HYD	1	
10	136095	FITTING – ELBOW 90° HYD	2	
11	136145	FITTING – BULKHEAD UNION HYD [221]	2	
12	136150	FITTING – ELBOW 90° BLKHD HYD [221]	1	
13	135778	FITTING – ADAPTER	4	
14	283791	CLAMP – ASSY [222]	1	
15	255461	PLATE – COVER	1	
16	232395	CLAMP – ASSY [222]	1	
17	184303	CLAMP – COVER PLATE	1	
18	283797	CLAMP – LINE BOTTOM LH	5	
19	283807	CLAMP – LINE MIDDLE LH	5	
20	311233	CLAMP – LINE TOP LH	5	
21	312654	STUD – THRD CLAMP PATCH WING	10	
22	30753	FASTENER – CABLE TIE, BLACK	1	
A	136540	WASHER – FLAT		
B	184644	BOLT – RHSN M6 X 1 X 50-8.8-ZINC		
C	152668	NUT – HEX FLG CTR LOC M6 X 1-8		
D	30660	BOLT – HEX HD M8 X 1.25 X 45-8.8-AA1J		
E	136442	NUT – HEX THIN M10 X 1.5-05-AA1J		
F	184692	NUT – HEX NYLOC M10 X 1.5-8-AA1J		

220. FD250 headers only.
221. The fitting includes a securing nut (NSS).
222. The clamp assembly includes two clamp halves (NSS). It does NOT include the cover plate or hardware.

84 Hydraulics – Lift and Fore-Aft, Triple Reel, Center Arm, Left Side (FD240, FD245, and FD250)

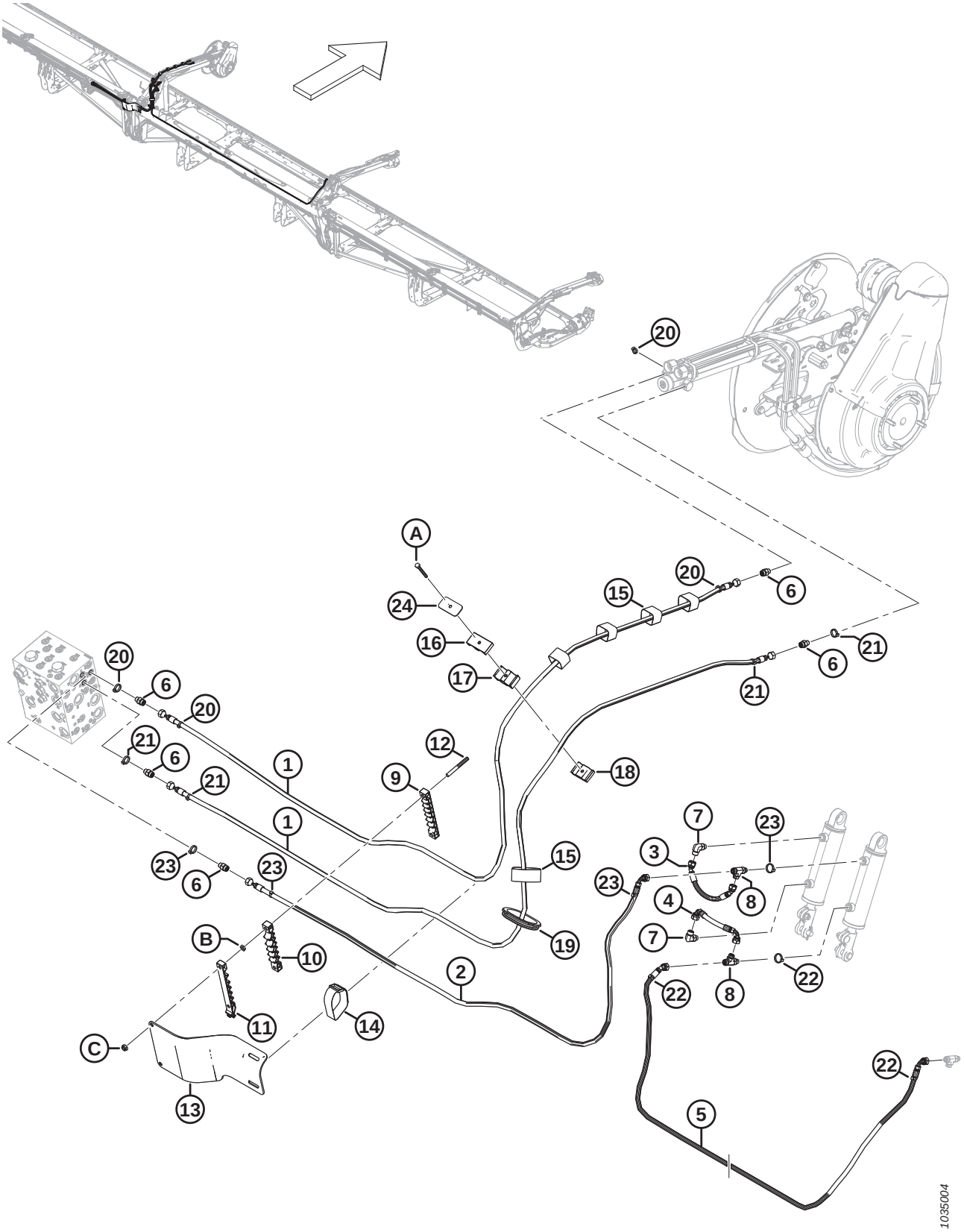

HYDRAULICS – LIFT AND FORE-AFT, TRIPLE REEL, CENTER ARM, LEFT SIDE (FD240, FD245, AND FD250)

Ref	Part Number	Description	Qty	Serial Number
1	323665	HOSE – HYD	2	
2	323666	HOSE – HYD	1	
3	283785	HOSE – HYD	1	
4	283786	HOSE – HYD	1	
5	323670	HOSE – HYD (FD240)	1	
	323673	HOSE – HYD (FD245 AND FD250)	1	
6	135778	FITTING – ADAPTER	5	
7	136095	FITTING – ELBOW 90° HYD	2	
8	136240	FITTING – TEE HYD	2	
9	283909	CLAMP – LINE BOTTOM FLEX LH	1	
10	283910	CLAMP – LINE MIDDLE FLEX LH	1	
11	311461	CLAMP – LINE TOP FLEX LH	1	
12	312655	STUD – THRD CLAMP PATCH BLACK	2	
13	311354	SHIELD – HOSE TRANSITION LH	1	
14	295929	CINCH STRAP – 12 IN. LG	1	
15	135444	CINCH STRAP – 6 IN. LG	5	
16	283989	CLAMP – HOSE REEL TOP	1	
17	283988	CLAMP – HOSE REEL MIDDLE	1	
18	283987	CLAMP – HOSE REEL BOTTOM	1	
19	125377	GROMMET – 91 MM I.D.	1	
20	40704	FASTENER – CABLE TIE, ORANGE	4	
21	40702	FASTENER – CABLE TIE, RED	4	
22	40703	FASTENER – CABLE TIE, BLUE	3	
23	21763	FASTENER – CABLE TIE, BLACK	4	
24	323023	PLATE – CLAMP CENTER REEL ARM	1	
A	184656	BOLT – HEX HD M8 X 1.25 X 70-8.8-AA1J		
B	136442	NUT – HEX THIN M10 X 1.5-05-AA1J		
C	184692	NUT – HEX NYLOC M10 X 1.5-8-AA1J		

85 Hydraulics – Lift and Fore-Aft, Triple Reel, Center Arm, Right Side (FD240, FD245, and FD250)

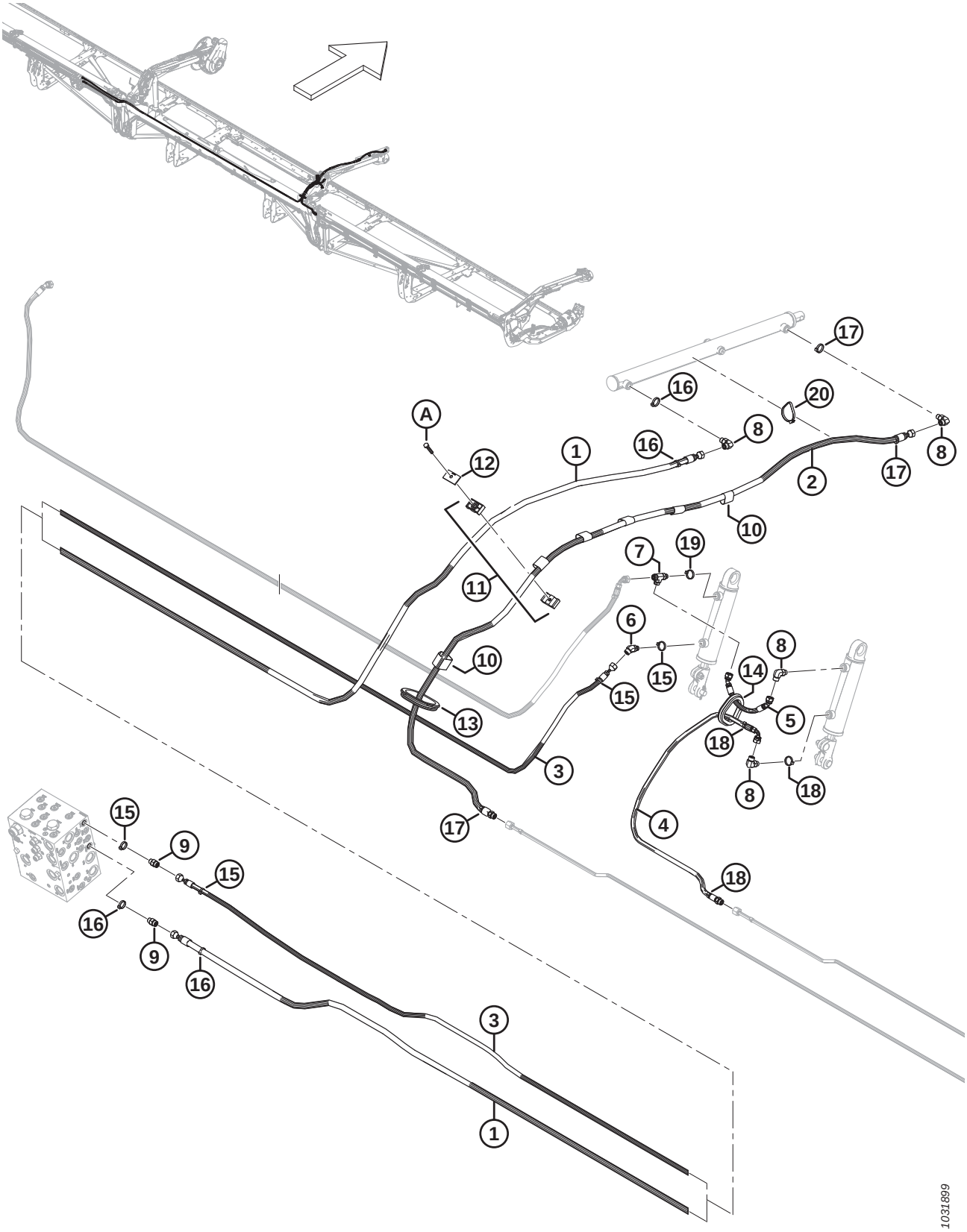

Ref	Part Number	Description	Qty	Serial Number
1	323671	HOSE – HYD (FD240)	1	
	323674	HOSE – HYD (FD245 AND FD250)	1	
2	323669	HOSE – HYD	1	
	135865	O-RING Ø1.78 X Ø9.25		
3	323664	HOSE – HYD (FD240)	1	
	323672	HOSE – HYD (FD245 AND FD250)	1	
4	323668	HOSE – HYD	1	
	135865	O-RING Ø1.78 X Ø9.25		
5	283785	HOSE – HYD	1	
6	136144	FITTING – ELBOW 45° HYD	1	
7	136240	FITTING – TEE HYD	1	
8	136095	FITTING – ELBOW 90° HYD	4	
9	135778	FITTING – ADAPTER	2	
10	135443	CINCH STRAP – 4 IN. LG	6	
11	232395	CLAMP – ASSY [223]	1	
12	184303	PLATE – COVER	1	
13	125377	GROMMET – 91 MM I.D.	1	
14	283889	GROMMET – RUBBER	1	
15	252795	FASTENER – CABLE TIE, PINK	4	
16	135226	FASTENER – CABLE TIE, LIGHT BLUE	4	
17	40701	FASTENER – CABLE TIE, YELLOW	3	
18	252794	FASTENER – CABLE TIE, PURPLE	3	
19	40703	FASTENER – CABLE TIE, BLUE	1	
20	30753	FASTENER – CABLE TIE, BLACK	1	
A	30660	BOLT – HEX HD M8 X 1.25 X 45-8.8-AA1J		

223. The clamp assembly includes two clamp halves (NSS). It does NOT include the cover plate or hardware.

86 Hydraulics – Lift and Fore-Aft, Triple Reel, Right Arm (FD240, FD245, and FD250)

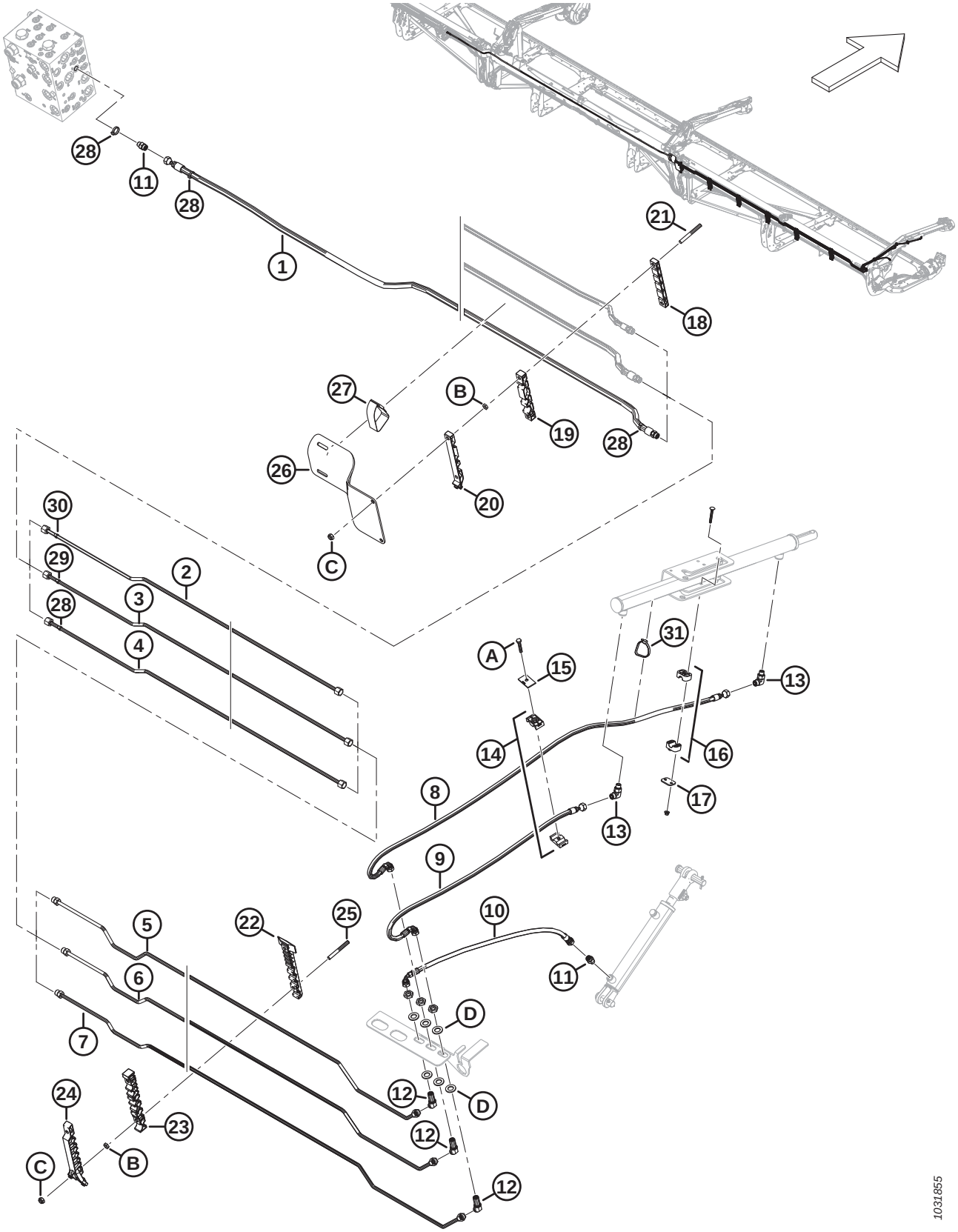

Ref	Part Number	Description	Qty	Serial Number
1	283096	HOSE – HYD (FD240)	1	
	283507	HOSE – HYD (FD245 AND FD250)	1	
	135865	O-RING Ø1.78 X Ø9.25		
2	283428	LINE – HYDRAULIC (FD245 AND FD250)	1	
	283451	LINE – HYDRAULIC (FD250)	1	
3	283429	LINE – HYDRAULIC (FD245 AND FD250)	1	
	283452	LINE – HYDRAULIC (FD250)	1	
4	283430	LINE – HYDRAULIC (FD245 AND FD250)	1	
	283453	LINE – HYDRAULIC (FD250)	1	
5	283431	LINE – HYDRAULIC	1	
	135865	O-RING Ø1.78 X Ø9.25		
6	283432	LINE – HYDRAULIC	1	
	135865	O-RING Ø1.78 X Ø9.25		
7	283433	LINE – HYDRAULIC	1	
	135865	O-RING Ø1.78 X Ø9.25		
8	283057	HOSE – HYD	1	
9	283058	HOSE – HYD	1	
10	283059	HOSE – HYD	1	
11	135778	FITTING – ADAPTER	3	
12	136146	FITTING – ELBOW 45° BLKHD HYD [224]	3	
13	136095	FITTING – ELBOW 90° HYD	2	
14	232395	CLAMP – ASSY [225]	2	
15	184303	CLAMP – COVER PLATE	2	
16	283791	CLAMP – ASSY [225]	1	
17	255461	PLATE – COVER	1	
18	283906	CLAMP – LINE TOP FLEX RH	1	
19	283907	CLAMP – LINE MIDDLE FLEX RH	1	
20	311462	CLAMP – LINE TOP FLEX RH	1	
21	312655	STUD – THRD CLAMP PATCH BLACK	2	
22	283820	CLAMP – LINE BOTTOM RH	5	
23	283818	CLAMP – LINE MIDDLE RH	5	
24	311451	CLAMP – LINE TOP RH	5	
25	312654	STUD – THRD CLAMP PATCH WING	10	
26	311360	SHIELD – HOSE TRANSITION RH	1	
27	170851	CINCH STRAP – 10 IN. LG	1	
28	49227	FASTENER – CABLE TIE, GREEN	4	
29	40701	FASTENER – CABLE TIE, YELLOW	1	
30	252794	FASTENER – CABLE TIE, PURPLE	1	
31	30753	FASTENER – CABLE TIE, BLACK	1	
A	30660	BOLT – HEX HD M8 X 1.25 X 45-8.8-AA1J		
B	136442	NUT – HEX THIN M10 X 1.5-05-AA1J		

224. The fitting includes a securing nut (NSS).
225. The clamp assembly includes two clamp halves (NSS). It does NOT include the cover plate or hardware.

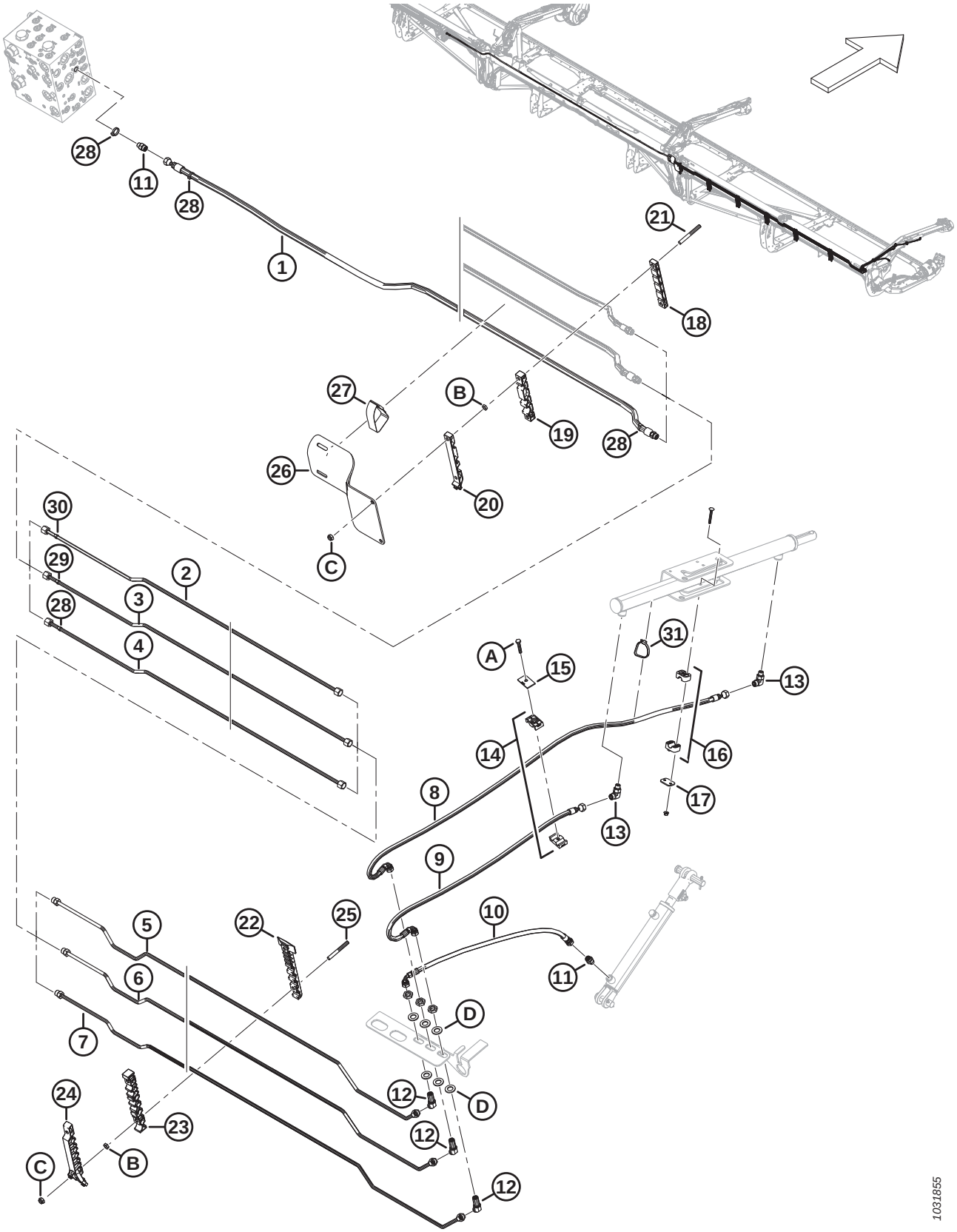
28
11
28
1
21
18
27
B
19
28
26
20
C
30
29
28
2
3
4
A
15
31
13
14
16
17
8
13
9
10
11
5
22
25
6
7
D
12
D
12
12
24
23
C
B
1031855

Ref	Part Number	Description	Qty	Serial Number
C	184692	NUT – HEX NYLOC M10 X 1.5-8-AA1J		
D	136540	WASHER – FLAT		

87 Hydraulics – Upper Cross Auger

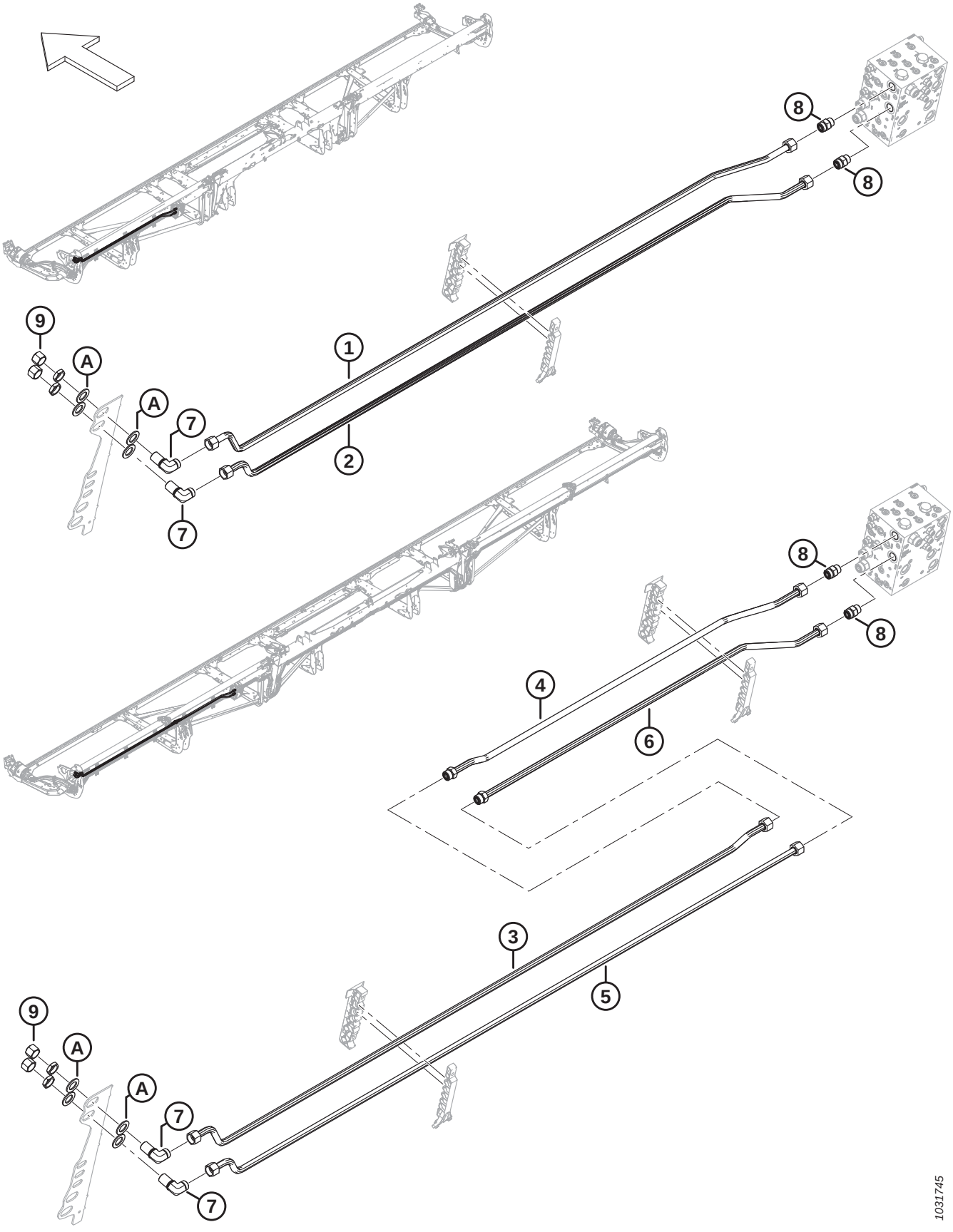

Ref	Part Number	Description	Qty	Serial Number
	B7338	**KIT – 25 FT. UPPER CROSS AUGER HYDRAULICS** [226]		
	B7117	KIT – 30 FT. UPPER CROSS AUGER HYDRAULICS [226]		
	B7118	KIT – 35 FT. UPPER CROSS AUGER HYDRAULICS [226]		
	B7119	KIT – 40 FT. AND 45 FT. UPPER CROSS AUGER HYDRAULICS [226]		
	B7120	KIT – 41 FT. UPPER CROSS AUGER HYDRAULICS [226]		
	B7121	KIT – 50 FT. UPPER CROSS AUGER HYDRAULICS [226]		
1	**323355**	**LINE – HYDRAULIC (FD225)**	**1**	
	283052	LINE – HYDRAULIC (FD230)	1	
	283164	LINE – HYDRAULIC (FD235)	1	
	283471	LINE – HYDRAULIC (FD240 AND FD245)	1	
	283462	LINE – HYDRAULIC (FD241)	1	
2	**323355**	**LINE – HYDRAULIC (FD225)**	**1**	
	283051	LINE – HYDRAULIC (FD230)	1	
	283205	LINE – HYDRAULIC (FD235)	1	
	283470	LINE – HYDRAULIC (FD240 AND FD245)	1	
	283461	LINE – HYDRAULIC (FD241)	1	
3	283469	LINE – HYDRAULIC (FD250)	1	
4	283200	LINE – HYDRAULIC (FD250)	1	
	135868	O-RING – Ø1.78 X Ø18.77		
5	283468	LINE – HYDRAULIC (FD250)	1	
6	283199	LINE – HYDRAULIC (FD250)	1	
	135868	O-RING – Ø1.78 X Ø18.77		
7	136245	FITTING – ELBOW 90° BULKHEAD HYD [227]	2	
	135868	O-RING – Ø1.78 X Ø18.77		
8	135788	FITTING – ADAPTER (UCAP, UCAR)	2	
	30971	O-RING – Ø2.95 X Ø23.47		
	135868	O-RING – Ø1.78 X Ø18.77		
9	135889	CAP – HYD SAE - 12 ORFS	2	
A	136355	WASHER – FLAT 2.0 IN OD ZP	4	

226. Kits are available through Whole Goods only.
227. The fitting includes a securing nut.

88 Hydraulics – Reel Drive, Single Reel

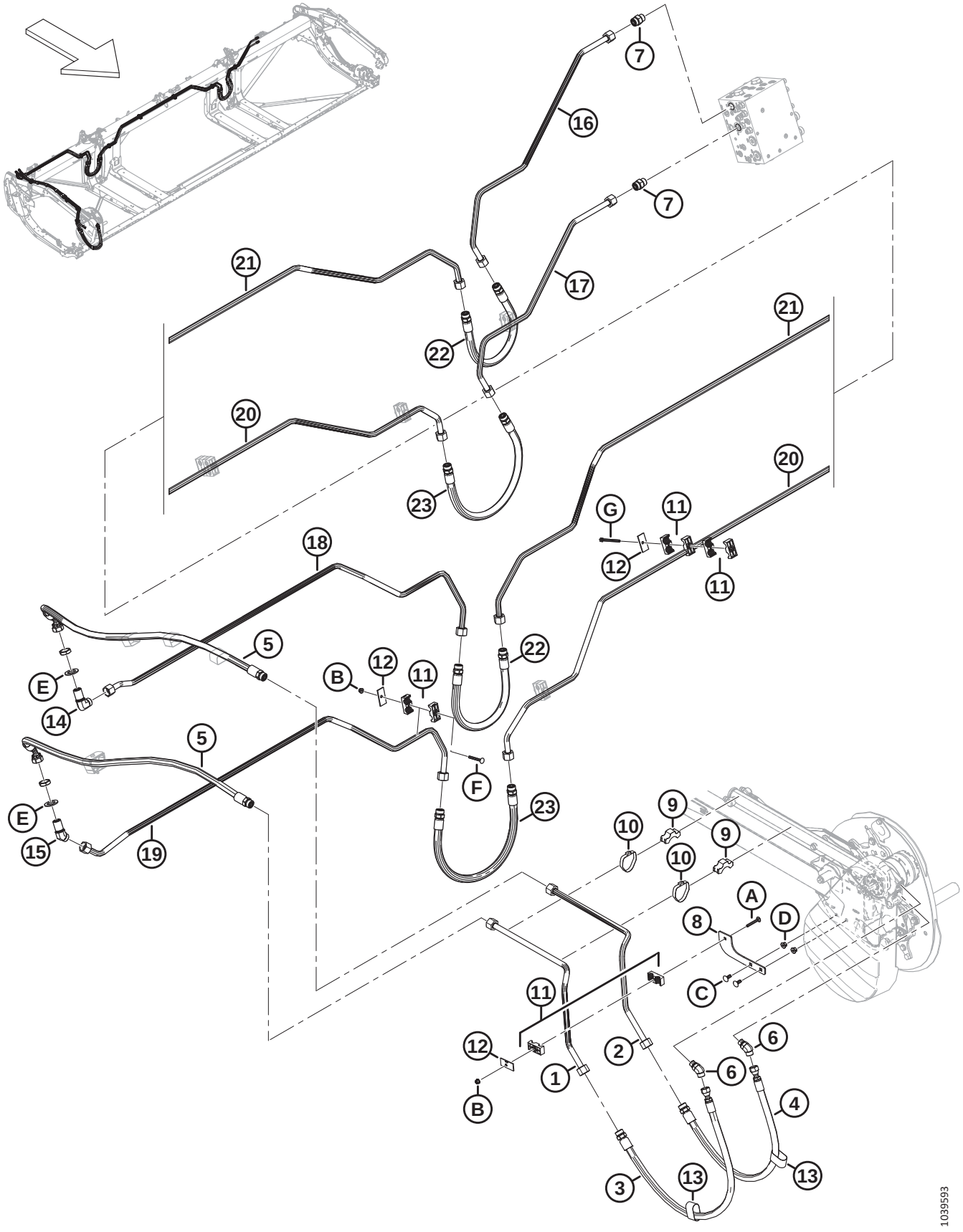

Ref	Part Number	Description	Qty	Serial Number
1	323428	LINE – HYDRAULIC	1	
2	323429	LINE – HYDRAULIC	1	
3	283092	HOSE – HYD	1	
	135868	O-RING – Ø1.78 X Ø18.77		
4	283091	HOSE – HYD	1	
	135868	O-RING – Ø1.78 X Ø18.77		
5	323519	HOSE – HYD (FD225)	2	
	135868	O-RING – Ø1.78 X Ø18.77		
6	136327	FITTING – ELBOW 45° HYD	2	
	44210	O-RING – Ø2.46 X Ø19.18		
	135867	O-RING – Ø1.78 X Ø15.60		
7	135788	FITTING – ADAPTER	2	
	30971	O-RING – Ø2.95 X Ø23.47		
	135868	O-RING – Ø1.78 X Ø18.77		
8	273285	SUPPORT – BRACKET	1	
9	232405	CLAMP – LINE	2	
10	112823	CLAMP – HOSE	2	
11	232397	CLAMP – ASSY [228]	9	
12	232233	CLAMP – COVER PLATE	7	
13	135443	CINCH STRAP 4 IN. LG	2	
14	136245	FITTING – ELBOW 90°BULKHEAD HYD [229]	1	
	135868	O-RING – Ø1.78 X Ø18.77		
15	136527	FITTING – ELBOW 45° BULKHEAD [229]	1	
	135868	O-RING – Ø1.78 X Ø18.77		
16	323346	LINE – HYDRAULIC	1	
17	323347	LINE – HYDRAULIC	1	
18	323348	LINE – HYDRAULIC	1	
19	323349	LINE – HYDRAULIC	1	
20	283035	LINE – HYDRAULIC	1	
21	283036	LINE – HYDRAULIC	1	
22	283070	HOSE – HYD	2	
23	283378	HOSE – HYD	2	
A	136486	BOLT – RHSN M8 X 1.25 X 60-8.8-AA1J		
B	135337	NUT – HEX FLG CTR LK M8 X 1.25-8-AA1J		
C	135785	BOLT – RHSN M10 X 1.5 X 25-8.8-AA1J		
D	135799	NUT – HEX FLG CTR LOC M10 X 1.5-10		
E	136355	WASHER – FLAT 2.0 IN. OD ZP		
F	136779	BOLT – RHSN M8 X 1.25 X 70-8.8-AA1J		
G	252002	BOLT – HEX HD M8 X 1.25 X 100-8.8-AA1J [230]		

228. The clamp assembly includes two clamp halves (NSS). It does NOT include the cover plate or hardware.
229. The fitting includes a securing nut (NSS).
230. This bolt attaches to the header frame and does not require a nut.

89 Hydraulics – Reel Drive, Double and Triple Reel

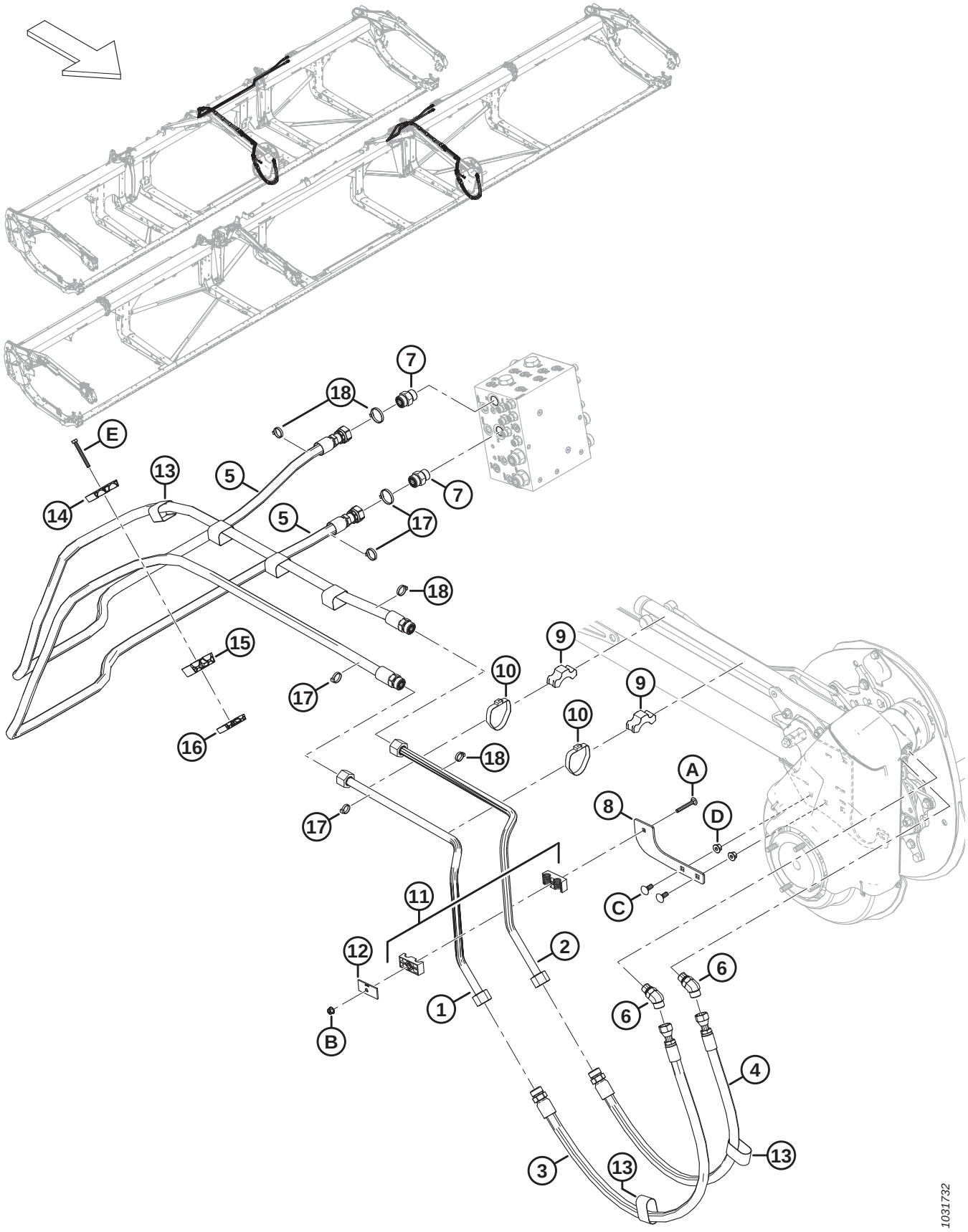

Ref	Part Number	Description	Qty	Serial Number
1	**323428**	**LINE – HYDRAULIC**	**1**	
	323808	**KIT – REEL DRIVE STEEL LINES** [231]	**A/R**	**–451189**
2	**323429**	**LINE – HYDRAULIC**	**1**	
	323808	**KIT – REEL DRIVE STEEL LINES** [231]	**A/R**	**–451189**
3	283092	HOSE – HYD	1	
	135868	O-RING – Ø1.78 X Ø18.77		
4	283091	HOSE – HYD	1	
	135868	O-RING – Ø1.78 X Ø18.77		
5	323662	HOSE – HYD (FD230, FD235, FD240, FD241)	2	
	323667	HOSE – HYD (FD245, FD250)	2	
	135868	O-RING – Ø1.78 X Ø18.77		
6	136327	FITTING – ELBOW 45° HYD	2	
	44210	O-RING – Ø2.46 X Ø19.18		
	135867	O-RING – Ø1.78 X Ø15.60		
7	135788	FITTING – ADAPTER	2	
	30971	O-RING – Ø2.95 X Ø23.47		
	135868	O-RING – Ø1.78 X Ø18.77		
8	273285	SUPPORT – BRACKET	1	
9	232405	CLAMP – LINE	2	
10	112823	CLAMP – HOSE	2	
11	232397	CLAMP – ASSY [232]	1	
12	232233	CLAMP – COVER PLATE	1	
13	135443	CINCH STRAP 4 IN. LG	2	
14	283989	CLAMP – HOSE REEL TOP	1	
15	283988	CLAMP – HOSE REEL MIDDLE	1	
16	283987	CLAMP – HOSE REEL BOTTOM	1	
17	40701	FASTENER – CABLE TIE, YELLOW	4	
18	49232	FASTENER – CABLE TIE, WHITE	4	
A	136486	BOLT – RHSN M8 X 1.25 X 60-8.8-AA1J		
B	135337	NUT – HEX FLG CTR LK M8 X 1.25-8-AA1J		
C	135785	BOLT – RHSN M10 X 1.5 X 25-8.8-AA1J		
D	135799	NUT – HEX FLG CTR LOC M10 X 1.5-10		
E	184656	BOLT – HEX HD M8 X 1.25 X 70-8.8-AA1J		

231. The kit includes steel lines (MD #323428 and MD #323429) and is used to service machines built prior to model year 2023.
232. The clamp assembly includes two clamp halves (NSS). It does NOT include the cover plate or hardware.

90 Hydraulics – ContourMax™, Contour Wheels (FD225 and FD230)

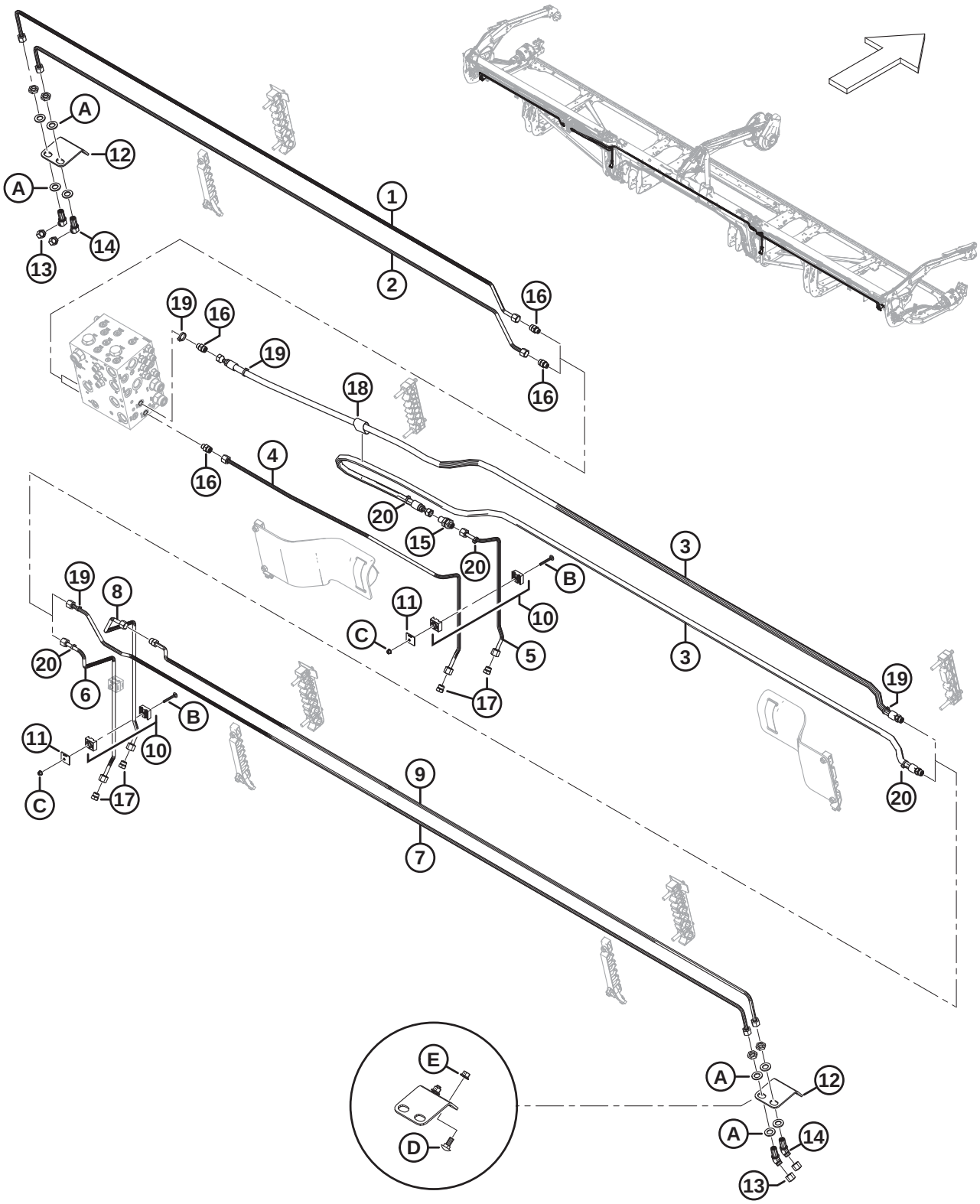

Ref	Part Number	Description	Qty	Serial Number
	B7340	**KIT – 25 FT. CONTOURMAX PLUMBING PKG** [233]		
	B7082	KIT – 30 FT. CONTOURMAX PLUMBING PKG. [233]		
1	**323350**	**LINE – HYDRAULIC (FD225)**	**1**	
	313524	LINE – HYDRAULIC (FD230)	1	
2	**323351**	**LINE – HYDRAULIC (FD225)**	**1**	
	313523	LINE – HYDRAULIC (FD230)	1	
3	283096	HOSE – HYD (**FD225 AND** FD230)	2	
	135865	O-RING Ø1.78 X Ø9.25		
4	313500	LINE – HYDRAULIC (**FD225 AND** FD230)	1	
5	313499	LINE – HYDRAULIC (**FD225 AND** FD230)	1	
6	283773	LINE – HYDRAULIC (**FD225 AND** FD230)	1	
7	**323353**	**LINE – HYDRAULIC (FD225)**	**1**	
	313526	LINE – HYDRAULIC (FD230)	1	
8	313511	LINE – HYDRAULIC (**FD225 AND** FD230)	1	
9	**323352**	**LINE – HYDRAULIC (FD225)**	**1**	
	313525	LINE – HYDRAULIC (FD230)	1	
	135865	O-RING Ø1.78 X Ø9.25		
10	313496	CLAMP – ASSY [234]	3	
11	313497	PLATE – COVER CLAMP	3	
12	312134	PLATE – BULKHEAD MTG	2	
13	136325	CAP – HYD SAE-6 ORFS	4	
14	136146	FITTING – ELBOW 45° BLKHD HYD [235]	4	
	135865	O-RING – Ø1.78 X Ø9.25		
15	136145	FITTING – BULKHEAD UNION HYD	1	
	135865	O-RING – Ø1.78 X Ø9.25		
16	135778	FITTING – ADAPTER	4	
	50219	O-RING – Ø1.98 X Ø11.89		
	135865	O-RING – Ø1.78 X Ø9.25		
17	136326	PLUG – HYD SAE-6 ORFS	4	
18	135443	CINCH STRAP – 4 IN. LG	1	
19	40703	FASTENER – CABLE TIE, BLUE	4	
20	40701	FASTENER – CABLE TIE, YELLOW	4	
A	136540	WASHER – FLAT		
B	184644	BOLT – RHSN M6 X 1 X 50-8.8-ZINC		
C	152668	NUT – HEX FLG CTR LOC M6 X 1-8		

233. The kit includes all listed parts to make the header ContourMax™ ready if not factory configured. You will also require bundle B7335 to complete the install; refer to Sections *114 (Option) ContourMax™ – Outer Contour Wheels, page 261* and *115 (Option) ContourMax™ – Inner Contour Wheels, page 265*. Kits are available through Whole Goods only.
234. The clamp assembly includes two clamp halves (NSS). It does NOT include the cover plate or hardware.
235. The fitting includes a securing nut (NSS).

HYDRAULICS – CONTOURMAX™, CONTOUR WHEELS (FD225 AND FD230)

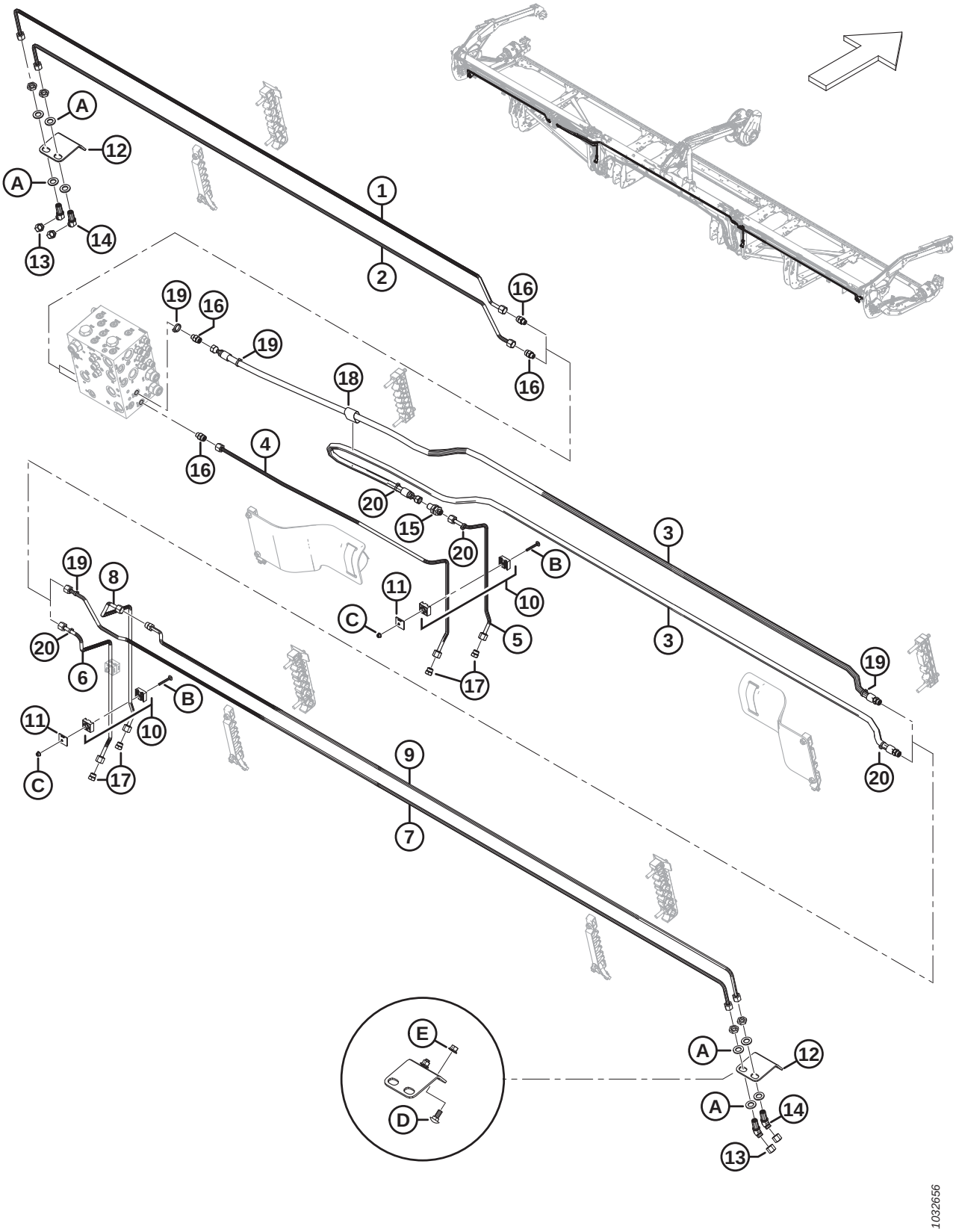

Ref	Part Number	Description	Qty	Serial Number
D	135785	BOLT – RHSN M10 X 1.5 X 25-8.8-AA1J		
E	135799	NUT – HEX FLG CTR LOC M10 X 1.5-10		

91 Hydraulics – ContourMax™, Contour Wheels (FD235)

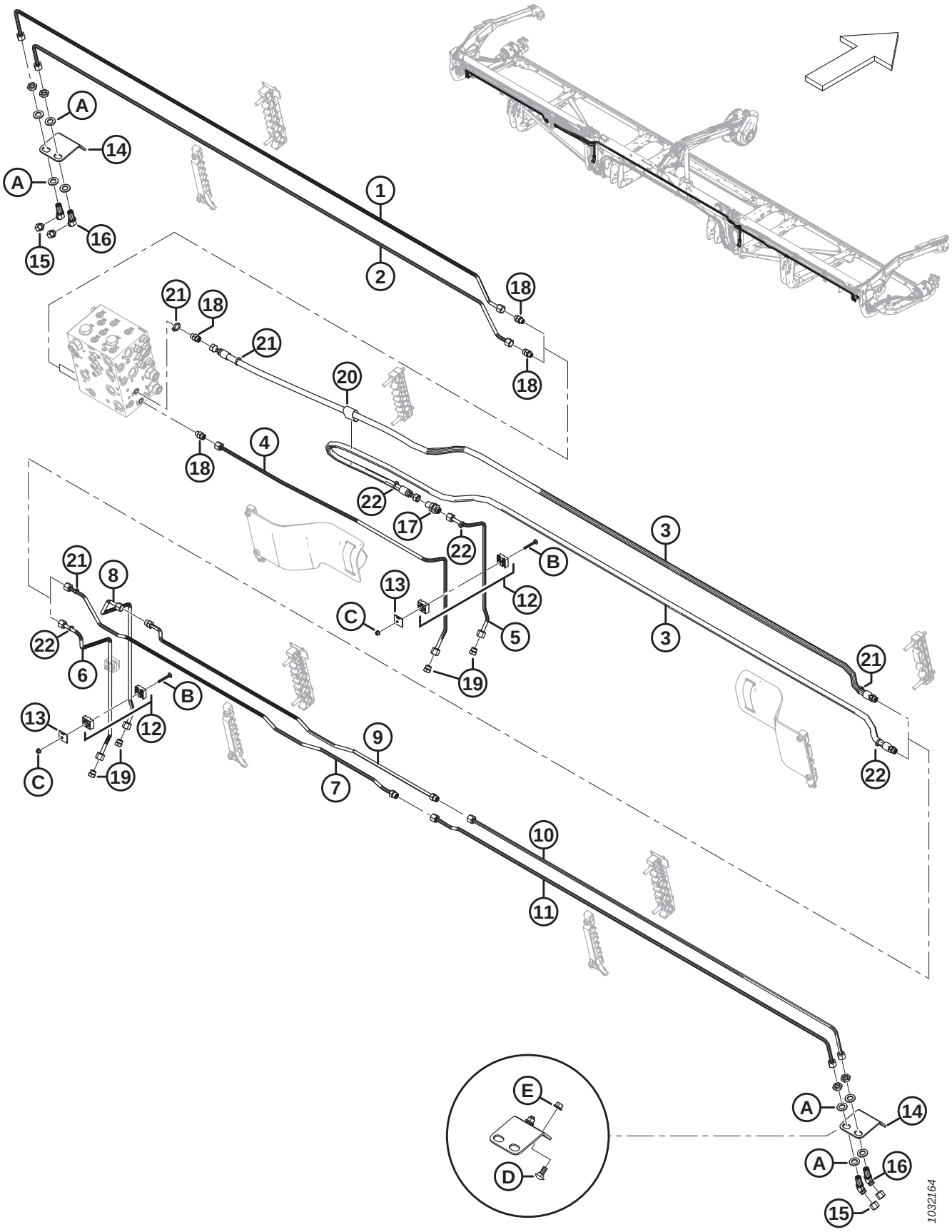

Ref	Part Number	Description	Qty	Serial Number
	B7083	KIT – 35 FT. CONTOURMAX PLUMBING PKG. [236]		
1	283017	LINE – HYDRAULIC (FD235)	1	
2	283016	LINE – HYDRAULIC (FD235)	1	
3	283096	HOSE – HYD (FD235)	2	
	135865	O-RING Ø1.78 X Ø9.25		
4	313500	LINE – HYDRAULIC (FD235)	1	
5	313499	LINE – HYDRAULIC (FD235)	1	
6	283773	LINE – HYDRAULIC (FD235)	1	
7	323362	LINE – HYDRAULIC (FD235)	1	
	135865	O-RING Ø1.78 X Ø9.25		
8	313511	LINE – HYDRAULIC (FD235)	1	
9	323361	LINE – HYDRAULIC (FD235)	1	
	135865	O-RING Ø1.78 X Ø9.25		
10	283018	LINE – HYDRAULIC (FD235)	1	
11	283014	LINE – HYDRAULIC (FD235)	1	
12	313496	CLAMP – ASSY [237]	3	
13	313497	PLATE – COVER CLAMP	3	
14	312134	PLATE – BULKHEAD MTG	2	
15	136325	CAP – HYD SAE-6 ORFS	4	
16	136146	FITTING – ELBOW 45° BLKHD HYD [238]	4	
	135865	O-RING – Ø1.78 X Ø9.25		
17	136145	FITTING – BULKHEAD UNION HYD	1	
	135865	O-RING – Ø1.78 X Ø9.25		
18	135778	FITTING – ADAPTER	4	
	50219	O-RING – Ø1.98 X Ø11.89		
	135865	O-RING – Ø1.78 X Ø9.25		
19	136326	PLUG – HYD SAE-6 ORFS	4	
20	135443	CINCH STRAP – 4 IN. LG	1	
21	40703	FASTENER – CABLE TIE, BLUE	4	
22	40701	FASTENER – CABLE TIE, YELLOW	4	
A	136540	WASHER – FLAT		
B	184644	BOLT – RHSN M6 X 1 X 50-8.8-ZINC		
C	152668	NUT – HEX FLG CTR LOC M6 X 1-8		
D	135785	BOLT – RHSN M10 X 1.5 X 25-8.8-AA1J		
E	135799	NUT – HEX FLG CTR LOC M10 X 1.5-10		

236. The kit includes all listed parts to make the header ContourMax™ ready if not factory configured. You will also require bundle B7335 to complete the install; refer to Sections *114 (Option) ContourMax™ – Outer Contour Wheels, page 261* and *115 (Option) ContourMax™ – Inner Contour Wheels, page 265*. Kits are available through Whole Goods only.
237. The clamp assembly includes two clamp halves (NSS). It does NOT include the cover plate or hardware.
238. The fitting includes a securing nut (NSS).

92 Hydraulics – ContourMax™, Contour Wheels (FD240, FD241, FD245, and FD250)

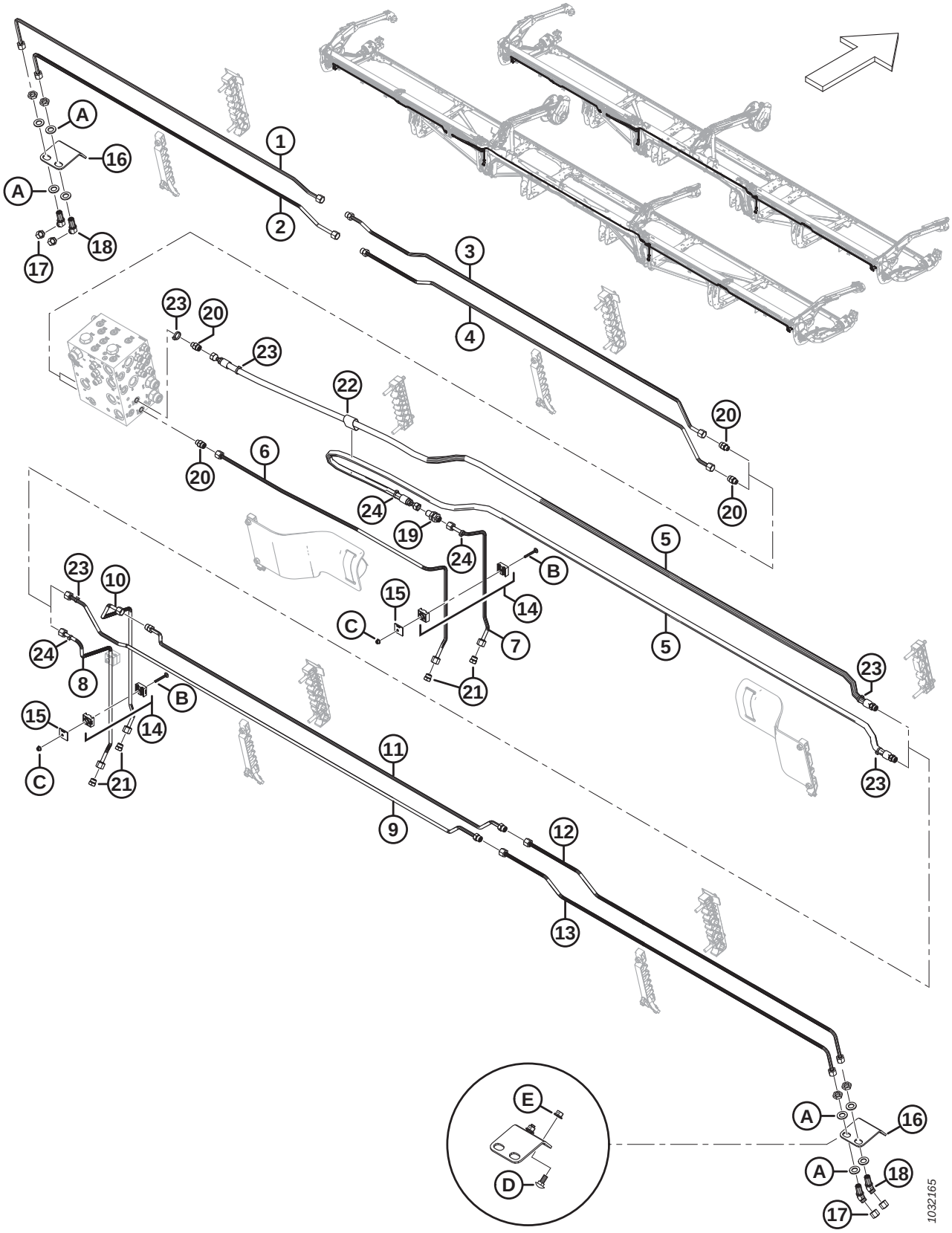

Ref	Part Number	Description	Qty	Serial Number
	B7113	KIT – 40 FT. CONTOURMAX PLUMBING PKG. [239]		
	B7114	KIT – 41 FT. CONTOURMAX PLUMBING PKG. [239]		
	B7193	KIT – 45 FT. CONTOURMAX PLUMBING PKG. [239]		
	B7116	KIT – 50 FT. CONTOURMAX PLUMBING PKG. [239]		
1	313557	LINE – HYDRAULIC (FD240 AND FD245)	1	
	283837	LINE – HYDRAULIC (FD241)	1	
	283833	LINE – HYDRAULIC (FD250)	1	
2	313556	LINE – HYDRAULIC (FD240 AND FD245)	1	
	283836	LINE – HYDRAULIC (FD241)	1	
	283831	LINE – HYDRAULIC (FD250)	1	
3	283832	LINE – HYDRAULIC (FD240, FD241, FD245, AND FD250)	1	
	135865	O-RING Ø1.78 X Ø9.25		
4	283830	LINE – HYDRAULIC (FD240, FD241, FD245, AND FD250)	1	
	135865	O-RING Ø1.78 X Ø9.25		
5	283096	HOSE – HYD (FD240, FD241)	2	
	283507	HOSE – HYD (FD245 AND FD250)	2	
	135865	O-RING Ø1.78 X Ø9.25		
6	313500	LINE – HYDRAULIC (FD240, FD241, FD245, AND FD250)	1	
7	313499	LINE – HYDRAULIC (FD240, FD241, FD245, AND FD250)	1	
8	283773	LINE – HYDRAULIC (FD240, FD241, FD245, AND FD250)	1	
9	313530	LINE – HYDRAULIC (FD240 AND FD245)	1	
	283839	LINE – HYDRAULIC (FD241)	1	
	283012	LINE – HYDRAULIC (FD250)	1	
	135865	O-RING Ø1.78 X Ø9.25		
10	313511	LINE – HYDRAULIC (FD240, FD241, FD245, AND FD250)	1	
11	313529	LINE – HYDRAULIC (FD240 AND FD245)	1	
	283838	LINE – HYDRAULIC (FD241)	1	
	283015	LINE – HYDRAULIC (FD250)	1	
	135865	O-RING Ø1.78 X Ø9.25		
12	283776	LINE – HYDRAULIC (FD240, FD241, FD245, AND FD250)	1	
13	283777	LINE – HYDRAULIC (FD240, FD241, FD245, AND FD250)	1	
14	313496	CLAMP – ASSY [240]	3	
15	313497	PLATE – COVER CLAMP	3	
16	312134	PLATE – BULKHEAD MTG	2	
17	136325	CAP – HYD SAE-6 ORFS	4	

239. The kit includes all listed parts to make the header ContourMax™ ready if not factory configured. You will also require bundle B7335 to complete the install; refer to Sections *114 (Option) ContourMax™ – Outer Contour Wheels, page 261* and *115 (Option) ContourMax™ – Inner Contour Wheels, page 265*. Kits are available through Whole Goods only.
240. The clamp assembly includes two clamp halves (NSS). It does NOT include the cover plate or hardware.

HYDRAULICS – CONTOURMAX™, CONTOUR WHEELS (FD240, FD241, FD245, AND FD250)

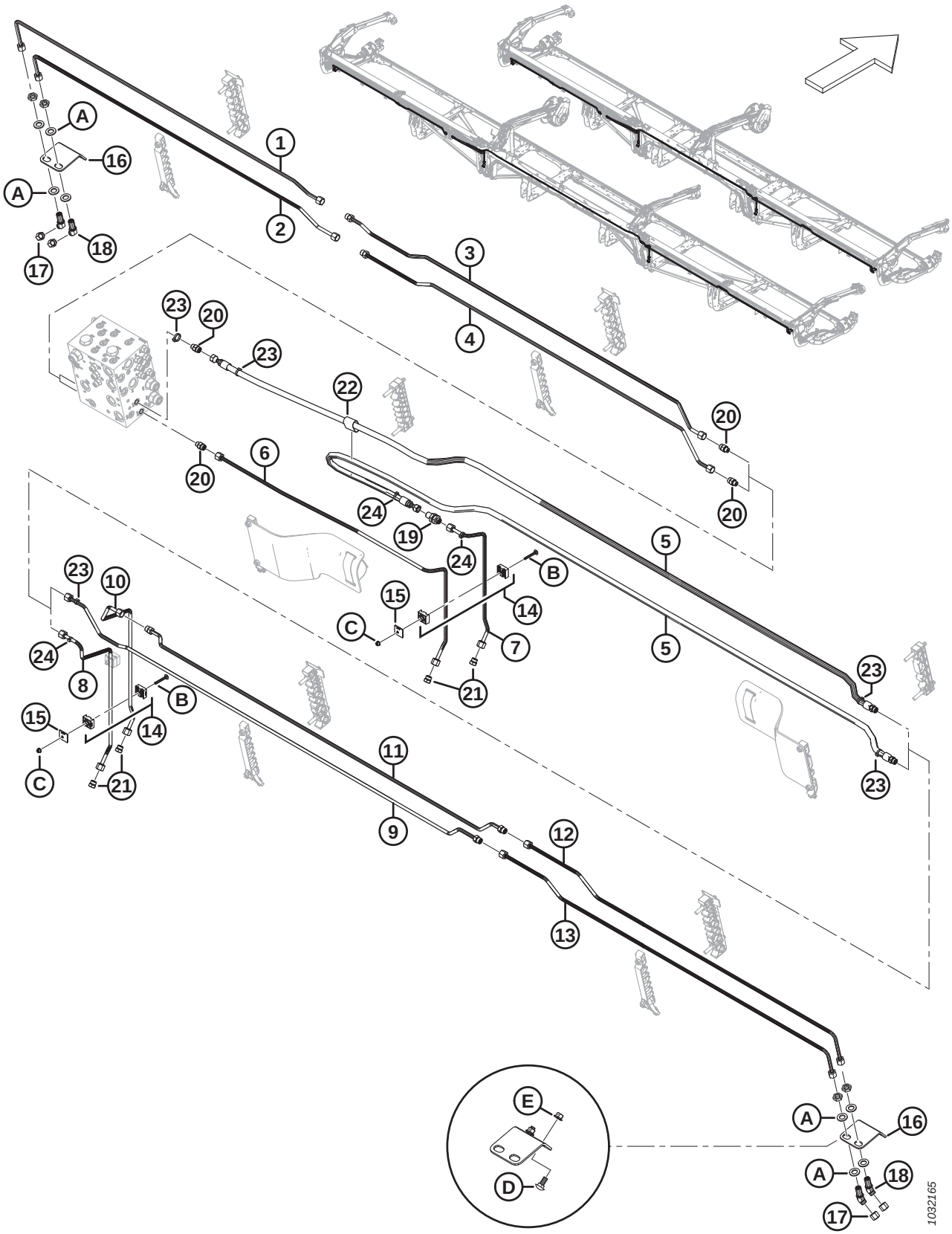

Ref	Part Number	Description	Qty	Serial Number
18	136146	FITTING – ELBOW 45° BLKHD HYD [241]	4	
	135865	O-RING – Ø1.78 X Ø9.25		
19	136145	FITTING – BULKHEAD UNION HYD	1	
	135865	O-RING – Ø1.78 X Ø9.25		
20	135778	FITTING – ADAPTER	4	
	50219	O-RING – Ø1.98 X Ø11.89		
	135865	O-RING – Ø1.78 X Ø9.25		
21	136326	PLUG – HYD SAE-6 ORFS	4	
22	135443	CINCH STRAP – 4 IN. LG	1	
23	40703	FASTENER – CABLE TIE, BLUE	4	
24	40701	FASTENER – CABLE TIE, YELLOW	4	
A	136540	WASHER – FLAT		
B	184644	BOLT – RHSN M6 X 1 X 50-8.8-ZINC		
C	152668	NUT – HEX FLG CTR LOC M6 X 1-8		
D	135785	BOLT – RHSN M10 X 1.5 X 25-8.8-AA1J		
E	135799	NUT – HEX FLG CTR LOC M10 X 1.5-10		

241. The fitting includes a securing nut (NSS).

93 Hydraulics – VertiBlade™ Vertical Knife (FD225, FD230, FD235, FD241, and FD245)

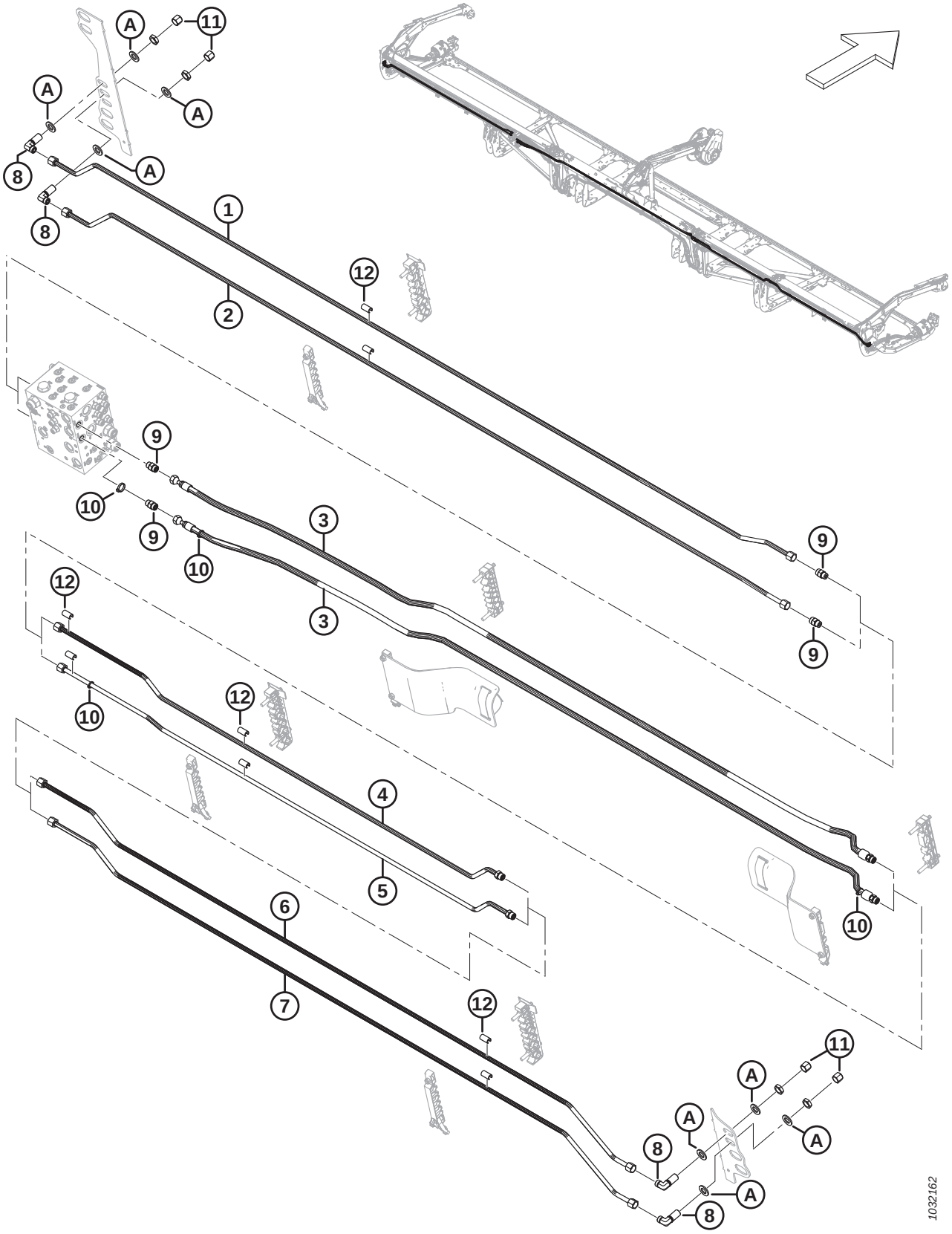

Ref	Part Number	Description	Qty	Serial Number
	B7339	**KIT – 25 FT. VERTIBLADE PLUMBING PKG.** [242]		
	B7127	KIT – 30 FT. VERTIBLADE PLUMBING PKG. [242]		
	B7128	KIT – 35 FT. VERTIBLADE PLUMBING PKG. [242]		
	B7130	KIT – 41 FT. VERTIBLADE PLUMBING PKG. [242]		
	B7195	KIT – 45 FT. VERTIBLADE PLUMBING PKG. [242]		
1	**323827**	**LINE – HYDRAULIC (FD225)**	**1**	
	283050	LINE – HYDRAULIC (FD230)	1	
	283160	LINE – HYDRAULIC (FD235)	1	
	283460	LINE – HYDRAULIC (FD241)	1	
	283435	LINE – HYDRAULIC (FD245)	1	
2	**323826**	**LINE – HYDRAULIC (FD225)**	**1**	
	283049	LINE – HYDRAULIC (FD230)	1	
	283159	LINE – HYDRAULIC (FD235)	1	
	283459	LINE – HYDRAULIC (FD241)	1	
	283434	LINE – HYDRAULIC (FD245)	1	
3	283097	HOSE – HYD (**FD225,** FD230, FD235, AND FD241)	2	
	283560	HOSE – HYD (FD245)	2	
	135866	O-RING – Ø1.78 X Ø12.42		
4	**323829**	**LINE – HYDRAULIC (FD225)**	**1**	
	283081	LINE – HYDRAULIC (FD230)	1	
	283161	LINE – HYDRAULIC (FD235)	1	
	283194	LINE – HYDRAULIC (FD241)	1	
	283436	LINE – HYDRAULIC (FD245)	1	
	135866	O-RING – Ø1.78 X Ø12.42		
5	**323828**	**LINE – HYDRAULIC (FD225)**	**1**	
	283082	LINE – HYDRAULIC (FD230)	1	
	283162	LINE – HYDRAULIC (FD235)	1	
	283195	LINE – HYDRAULIC (FD241)	1	
	283437	LINE – HYDRAULIC (FD245)	1	
	135866	O-RING – Ø1.78 X Ø12.42		
6	283438	LINE – HYDRAULIC (FD241 AND FD245) [243]	1	
7	283439	LINE – HYDRAULIC (FD241 AND FD245) [243]	1	
8	136244	FITTING – ELBOW 90° BULKHEAD HYD [244]	4	
	135866	O-RING – Ø1.78 X Ø12.42		
9	135780	FITTING – ADAPTER	4	
	44209	O-RING – Ø2.21 X Ø16.36		
	135866	O-RING – Ø1.78 X Ø12.42		

242. The kit includes all listed parts to make the header power divider (VertiBlade™) ready if not factory configured. Kits are available through Whole Goods only.
243. FD241 and FD245 headers only.
244. The fitting includes a securing nut.

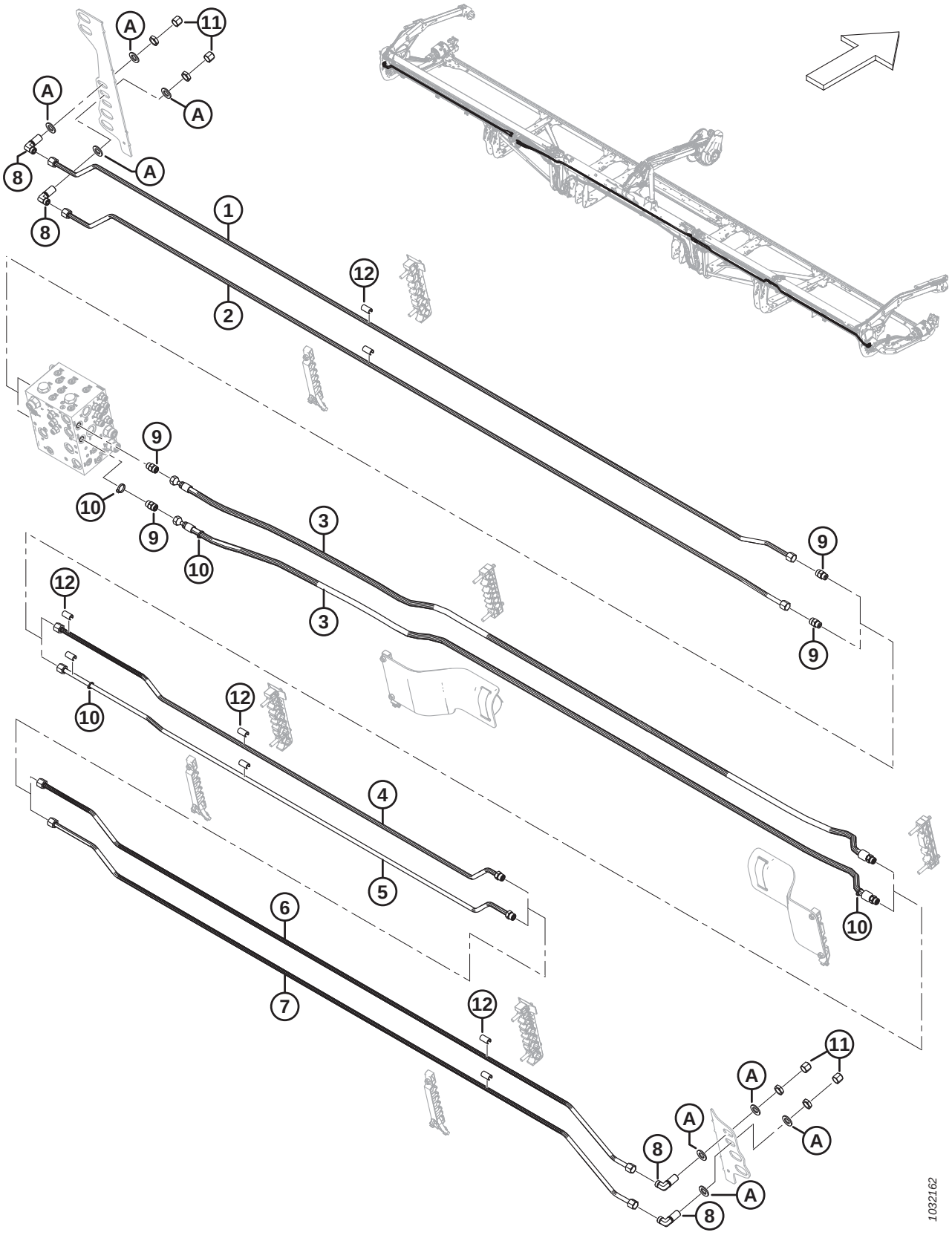
A
11
A
A
8
A
8
1
2
12
9
10
9
10
3
3
9
9
12
10
12
4
5
6
7
12
11
A
A
A
8
A
8
1032162

Ref	Part Number	Description	Qty	Serial Number
10	252795	FASTENER – CABLE TIE, PINK	4	
11	136741	CAP – HYD SAE 8 ORFS	4	
12	323003	SPACER – 1/2 IN. HYD LINE [245]		
A	18601	WASHER – FLAT SAE		

245. Quantities: FD225 = 6, FD230 = 10, FD235 = 14, FD241 = 18, and FD245 = 18.

94 Hydraulics – VertiBlade™ Vertical Knife (FD250)

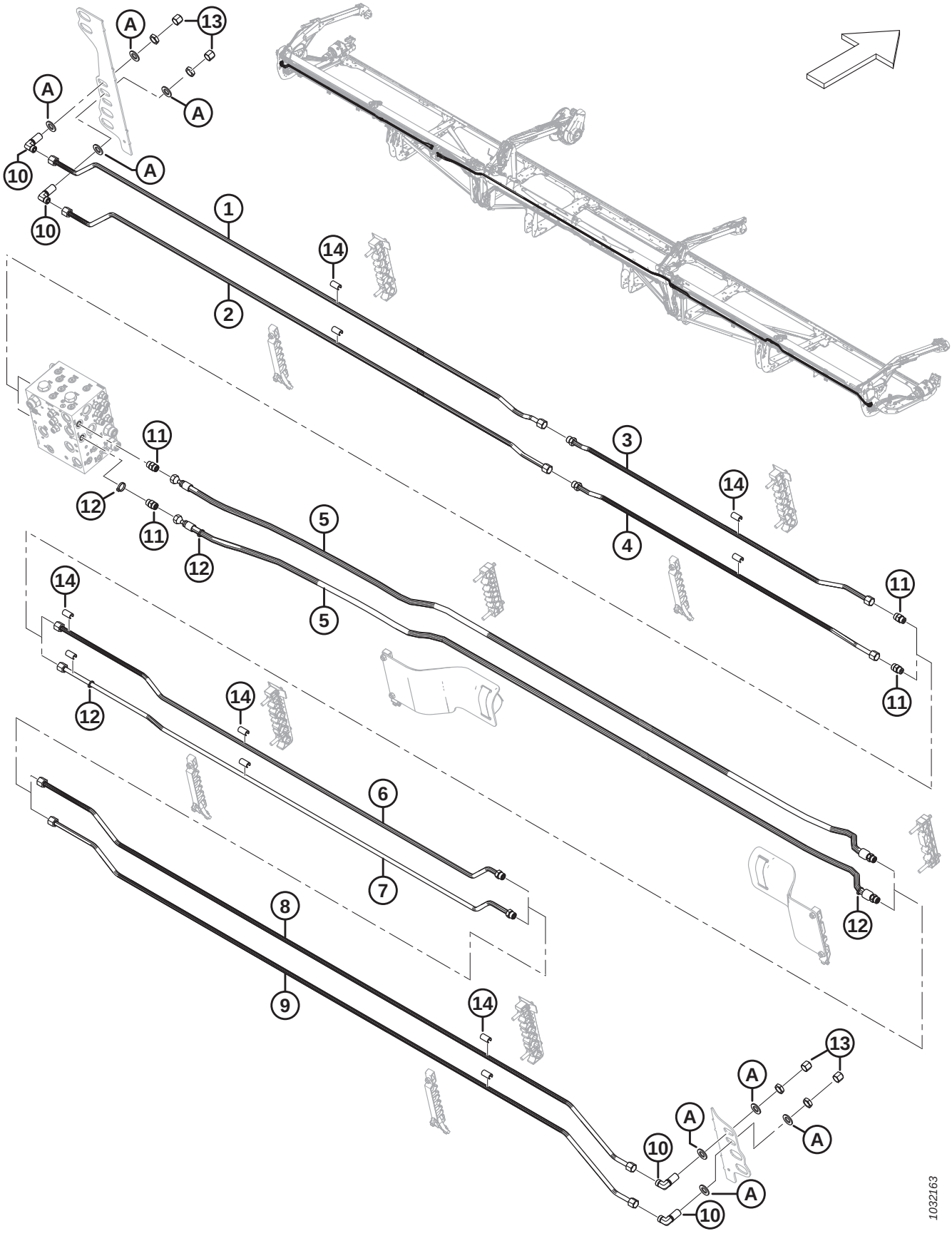

Ref	Part Number	Description	Qty	Serial Number
	B7131	KIT – 50 FT. VERTIBLADE PLUMBING PKG. [246]		
1	283467	LINE – HYDRAULIC	1	
2	283466	LINE – HYDRAULIC	1	
3	283191	LINE – HYDRAULIC	1	
	135866	O-RING – Ø1.78 X Ø12.42		
4	283190	LINE – HYDRAULIC	1	
	135866	O-RING – Ø1.78 X Ø12.42		
5	283560	HOSE – HYD	2	
	135866	O-RING – Ø1.78 X Ø12.42		
6	283192	LINE – HYDRAULIC	1	
	135866	O-RING – Ø1.78 X Ø12.42		
7	283193	LINE – HYDRAULIC	1	
	135866	O-RING – Ø1.78 X Ø12.42		
8	283438	LINE – HYDRAULIC	1	
9	283439	LINE – HYDRAULIC	1	
10	136244	FITTING – ELBOW 90° BULKHEAD HYD [247]	4	
	135866	O-RING – Ø1.78 X Ø12.42		
11	135780	FITTING – ADAPTER	4	
	44209	O-RING – Ø2.21 X Ø16.36		
	135866	O-RING – Ø1.78 X Ø12.42		
12	252795	FASTENER – CABLE TIE, PINK	4	
13	136741	CAP – HYD SAE 8 ORFS	4	
14	323003	SPACER – 1/2 IN. HYD LINE	22	
A	18601	WASHER – FLAT SAE		

246. The kit includes all listed parts to make the header power divider (VertiBlade™) ready if not factory configured. Kits are available through Whole Goods only.
247. The fitting includes a securing nut.

95 Hydraulic Line Covers (FD225)

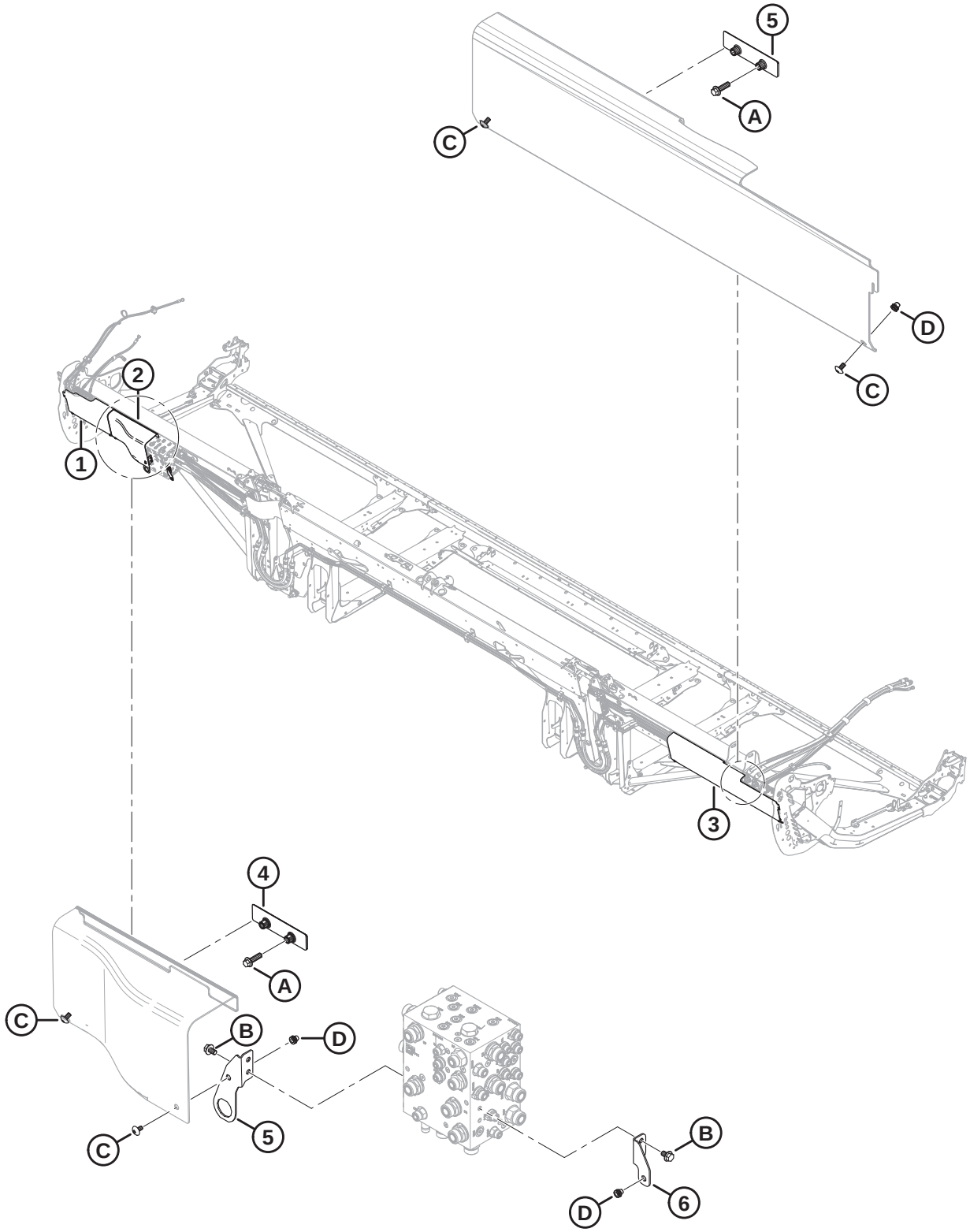

HYDRAULIC LINE COVERS (FD225)

Ref	Part Number	Description	Qty	Serial Number
1	**323164**	**COVER – HYD LH END PLASTIC**	**1**	
2	**323795**	**COVER – HYD MANIFOLD LH**	**1**	
3	**340683**	**COVER – HYD RH END PLASTIC**	**1**	
4	**283849**	**BRACKET – HYD COVER SUPPORT**	**2**	
5	**323772**	**ASSY – CONNECTOR BRACKET** [248]	**1**	
6	**323773**	**ASSY – RH SHIELD BRACKET** [249]	**1**	
A	**136211**	**BOLT – HEX FLG HD M10 X 1.5 X 35-8.8-AA1J**		
B	**136151**	**BOLT – HEX FLG HD TFL M10 X 1.5 X 16-8.8-AA1J**		
C	**320336**	**SCREW – TORX TRUSS HD M8 X 1.25 X 16-SPCL-8.8-AA1T**		
D	**320448**	**RIVNUT – M8 X 1.25 HEX**		

248. The assembly includes cover mounting connector bracket (NSS) and rivnut (MD #320448).
249. The assembly includes RH shield mounting bracket (NSS) and rivnut (MD #320448).

96 Hydraulic Line Covers (FD230, FD235, and FD240)

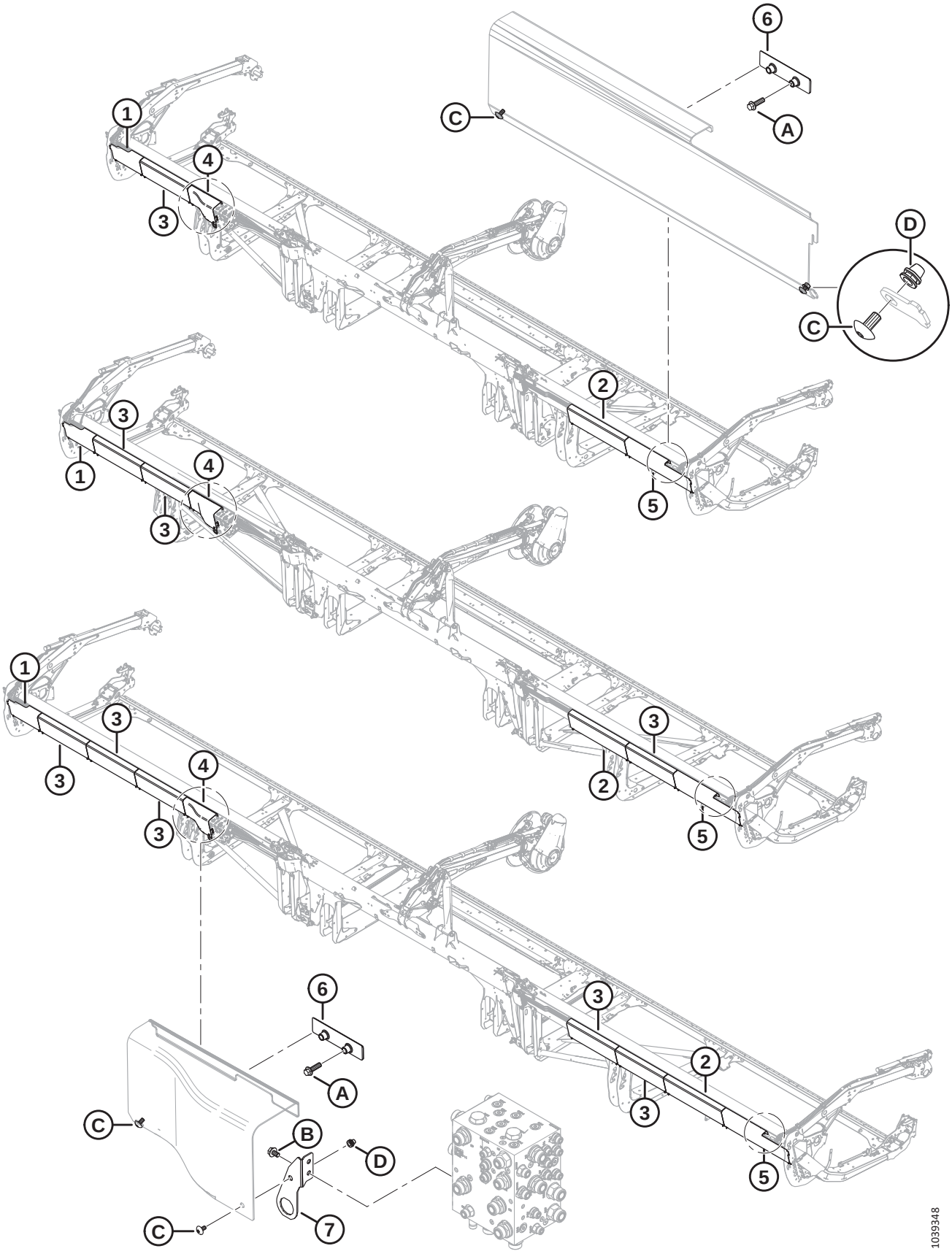

HYDRAULIC LINE COVERS (FD230, FD235, AND FD240)

Ref	Part Number	Description	Qty	Serial Number
1	323164	COVER – HYD LH END PLASTIC	1	
2	323172	COVER – HYD LONG PLASTIC [250]		
3	323169	COVER – HYD COMMON PLASTIC [251]		
4	**323795**	**COVER – HYD MANIFOLD LH**	**1**	
5	323166	COVER – HYD RH END PLASTIC	1	
6	283849	BRACKET – HYD COVER SUPPORT	2	
7	**323772**	**ASSY – CONNECTOR BRACKET** [252]	**1**	
A	136211	BOLT – HEX FLG HD M10 X 1.5 X 35-8.8-AA1J		
B	136151	BOLT – HEX FLG HD TFL M10 X 1.5 X 16-8.8-AA1J		
C	320336	SCREW – TORX TRUSS HD M8 X 1.25 X 16-SPCL-8.8-AA1T [253]		
D	**320448**	**RIVNUT – M8 X 1.25 HEX**		

250. Quantities: FD230 = 1, FD235 = 1, and FD240 = 1.
251. Quantities: FD230 = 1, FD235 = 3, and FD240 = 5.
252. The assembly includes cover mounting connector bracket (NSS) and rivnut (MD #320448). Model year 2022 and prior machines with superseded bracket (MD #311513) used M10 bolt (MD #152655) and M10 lock nut (MD #135799) to secure the LH hydraulic manifold cover to the connector bracket. For model year 2023 and later machines, or for machines that have been serviced with connector bracket assembly (MD #323772), order M8 screw (MD #320336).
253. Quantities: FD230 = 10, FD235 = 14, and FD240 = 18.

97 Hydraulic Line Covers (FD241, FD245, and FD250)

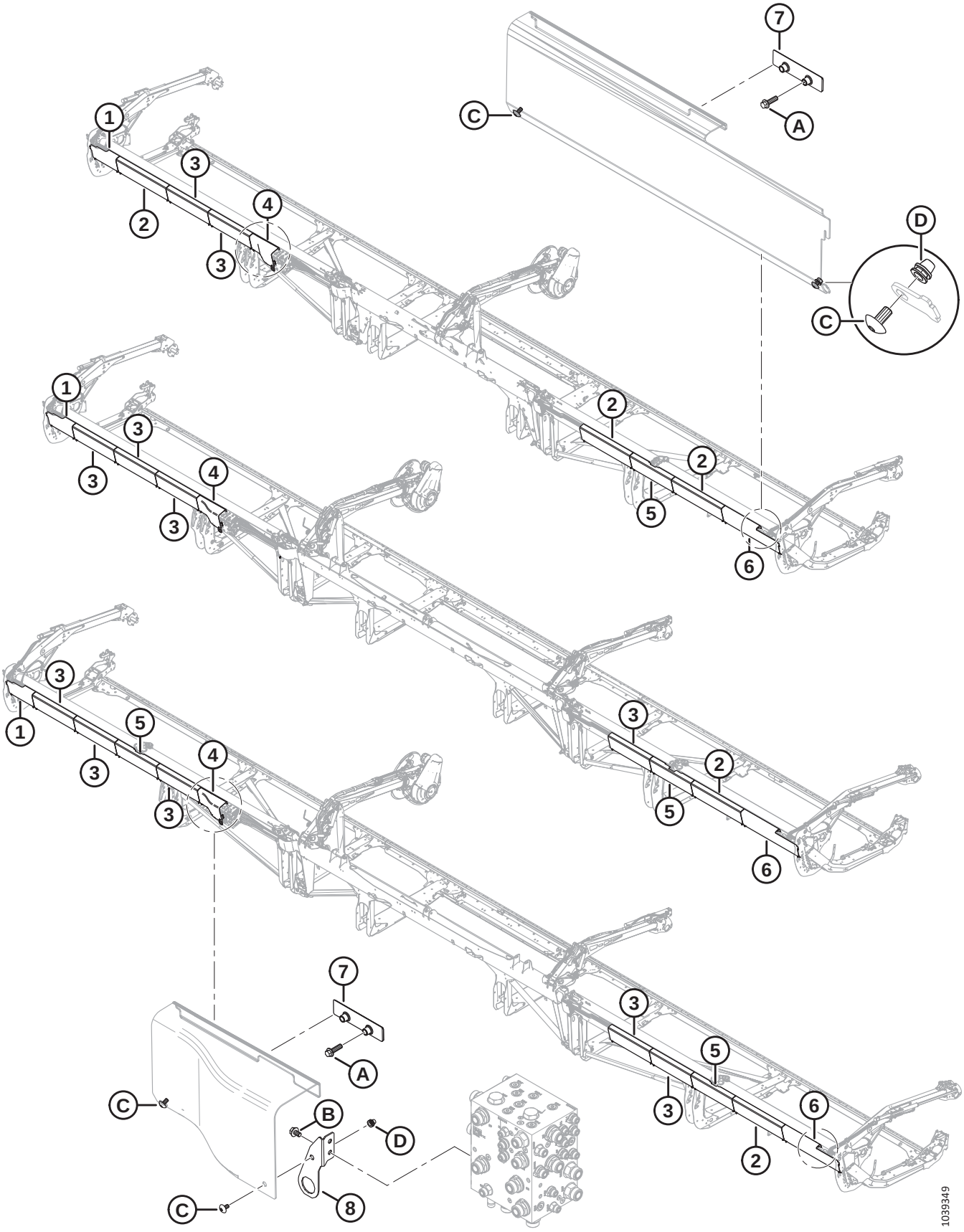

HYDRAULIC LINE COVERS (FD241, FD245, AND FD250)

Ref	Part Number	Description	Qty	Serial Number
1	323164	COVER – HYD LH END PLASTIC	1	
2	323172	COVER – HYD LONG PLASTIC [254]		
3	323169	COVER – HYD COMMON PLASTIC [255]		
4	**323795**	**COVER – HYD MANIFOLD LH**	**1**	
5	323165	COVER – HYD SPLIT PLASTIC [256]		
6	323166	COVER – HYD RH END PLASTIC	1	
7	283849	BRACKET – HYD COVER SUPPORT	2	
8	**323772**	**ASSY – CONNECTOR BRACKET** [257]	**1**	
A	136211	BOLT – HEX FLG HD M10 X 1.5 X 35-8.8-AA1J		
B	136151	BOLT – HEX FLG HD TFL M10 X 1.5 X 16-8.8-AA1J		
C	320336	SCREW – TORX TRUSS HD M8 X 1.25 X 16-SPCL-8.8-AA1T [258]		
D	**320448**	**RIVNUT – M8 X 1.25 HEX**		

254. Quantities: FD241 = 3, FD245 = 1, and FD250 = 3.
255. Quantities: FD241 = 2, FD245 = 4, and FD250 = 5.
256. Quantities: FD241 = 1, FD245 = 1, and FD250 = 2.
257. The assembly includes cover mounting connector bracket (NSS) and rivnut (MD #320448). Model year 2022 and prior machines with superseded bracket (MD #311513) used M10 bolt (MD #152655) and M10 lock nut (MD #135799) to secure the LH hydraulic manifold cover to the connector bracket. For model year 2023 and later machines, or for machines that have been serviced with connector bracket assembly (MD #323772), order M8 screw (MD #320336).
258. Quantities: FD241 = 18, FD245 = 18, and FD250 = 22.

98 Electrical – Harness (FD225)

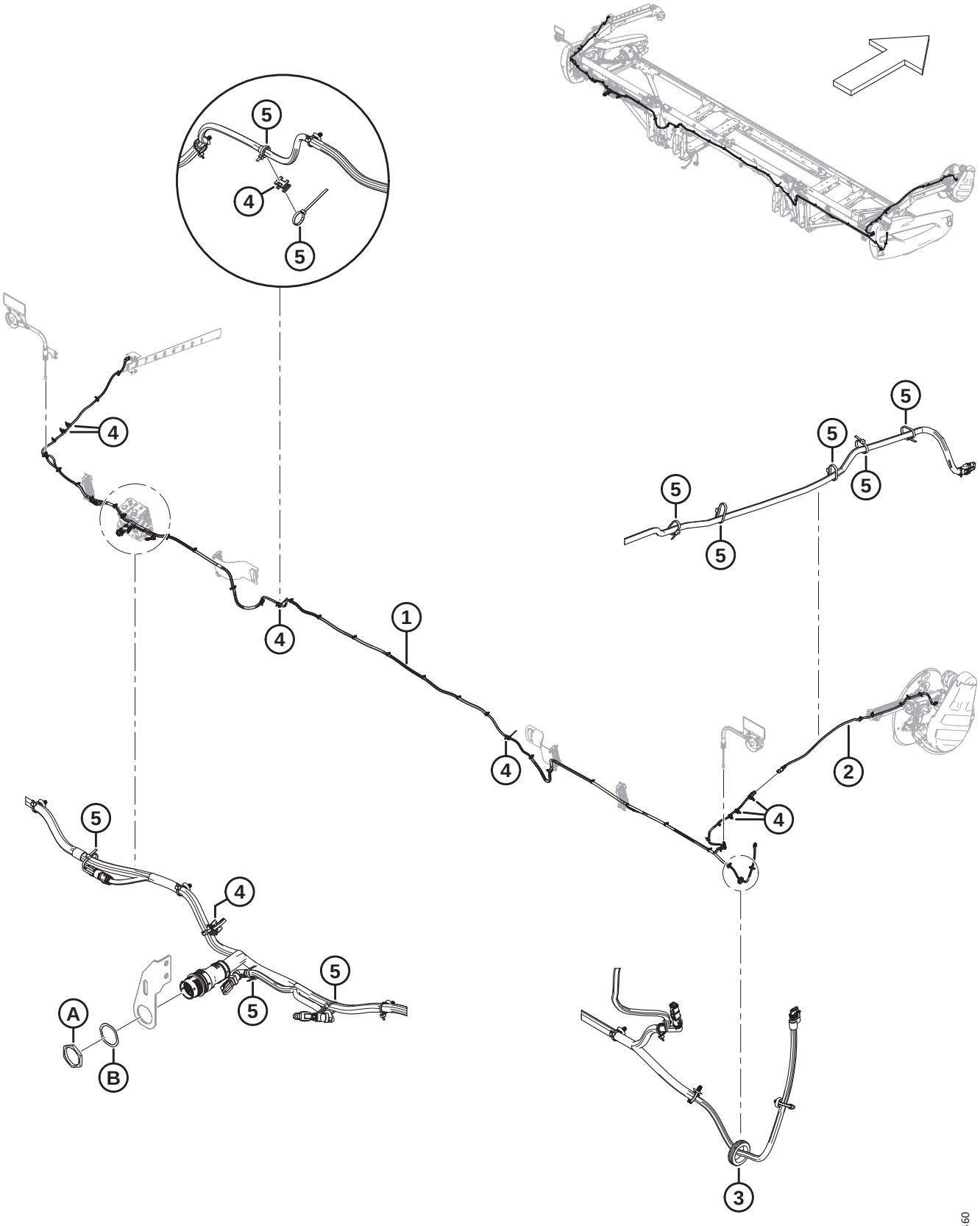

Ref	Part Number	Description	Qty	Serial Number
1	**323381**	**HARNESS – MAIN 25 FT** [259]	**1**	
2	**323145**	**HARNESS – HDR EXT. REEL ARM**	**1**	
3	**323130**	**GROMMET – RUBBER**	**1**	
4	**134442**	**SPACER – DUAL SWIVEL SADDLE**	**8**	
5	**21763**	**FASTENER – CABLE TIE, BLACK, 160 MM LG**	**A/R**	
A	**134728**	**NUT – PANEL, HDP 20, SIZE 24**		
B	**134730**	**WASHER – LOCK, HDP 20, SIZE 24**		

259. The harness comes complete with all fir tree fasteners (MD #136655) attached.

99 Electrical – Harness (FD230, FD235, FD240, FD241, FD245, and FD250)

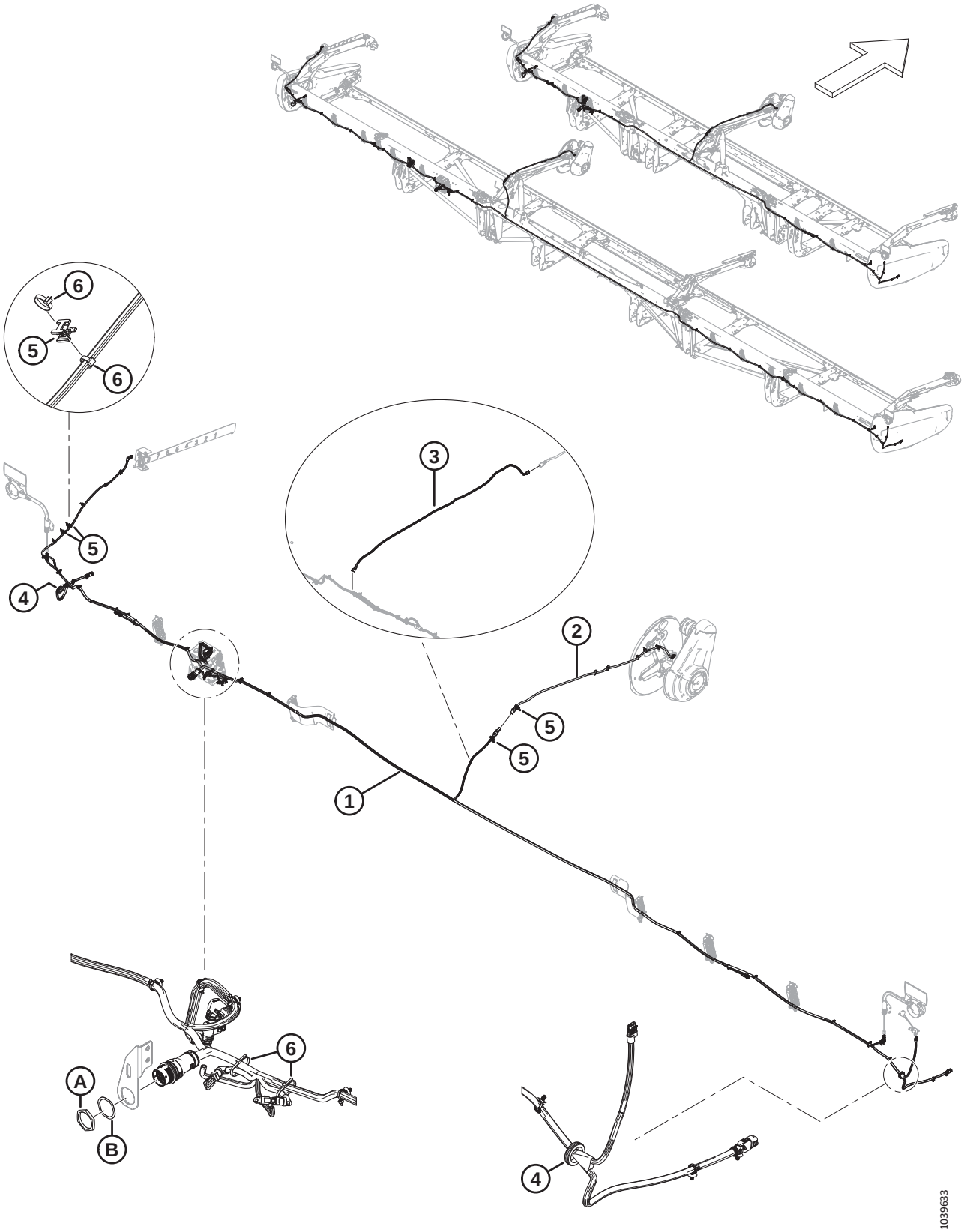

Ref	Part Number	Description	Qty	Serial Number
1	**323207**	**HARNESS – MAIN 30 FT** [260]	**1**	
	323208	**HARNESS – MAIN 35 FT** [260]	**1**	
	323210	**HARNESS – MAIN 40 FT** [260]	**1**	
	323209	**HARNESS – MAIN 41 FT** [260]	**1**	
	323211	**HARNESS – MAIN 45 FT** [260]	**1**	
	323212	**HARNESS – MAIN 50 FT** [260]	**1**	
	136655	FASTENER – FIR TREE MT W/ TIE	A/R	
2	323145	HARNESS – HDR EXT. REEL ARM	1	
3	323718	HARNESS – HDR EXT. REEL TR (2021/2022 FD240 TRIPLE REEL) [261]	1	
4	323130	GROMMET – RUBBER	2	
5	134442	SPACER – DUAL SWIVEL SADDLE	4	
6	21763	FASTENER – CABLE TIE, BLACK, 160 MM LG	A/R	
A	134728	NUT – PANEL, HDP 20, SIZE 24		
B	134730	WASHER – LOCK, HDP 20, SIZE 24		

260. The harness comes complete with all fir tree fasteners (MD #136655) attached.

261. Required only on model year 2021/2022 FD240 triple reel headers; installed between the main harness and extension harness (MD #323145).

100 Electrical – Clearance Lights

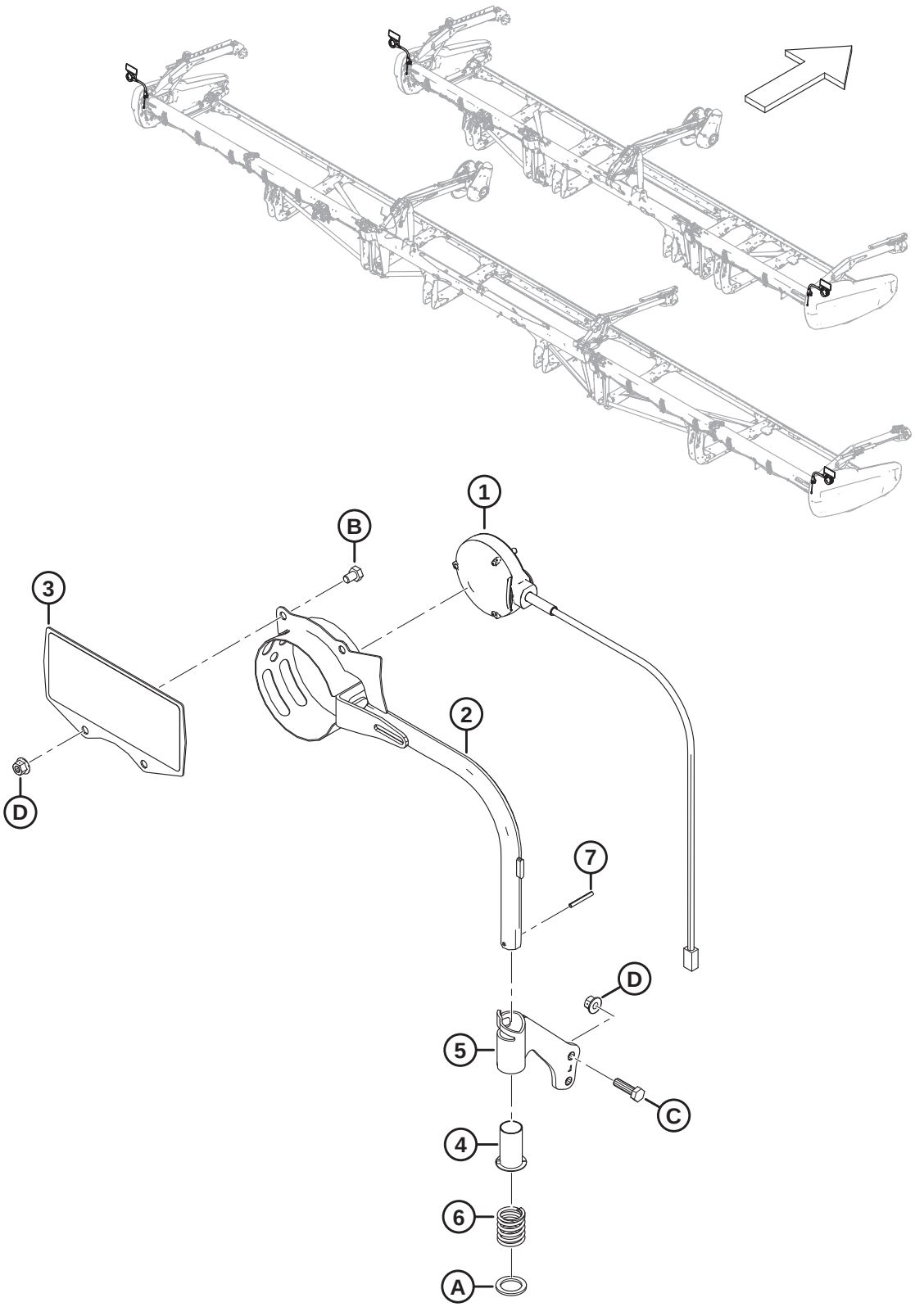

Ref	Part Number	Description	Qty	Serial Number
1	313940	LIGHT – MARKER, AMBER	2	
2	313192	WELDT – CLEARANCE LIGHT	2	
3	313643	ASSY – COMBINE REFLECTOR [262]	2	
4	233912	BUSHING	2	
5	233914	ASSY – LH TUBE MOUNT [263]	1	
	233913	ASSY – RH TUBE MOUNT [263]	1	
6	313064	SPRING – COMPRESSION	2	
7	7642	PIN – SPRING 3/16 DIA X 1.5 LG	2	
A	320248	WASHER – FLAT		
B	50071	BOLT – HEX HD TFL M10 X 1.5 X 15-8.8-AA1J		
C	30628	BOLT – HEX HD M10 X 1.5 X 35-8.8-AA1J		
D	135799	NUT – HEX FLG CTR LOC M10 X 1.5-10		

262. The reflector assembly includes two reflectors (MD #313730, MD #115146).
263. The tube mount assembly includes bushing (MD #233912).

101 Electrical – Reel Height Sensor

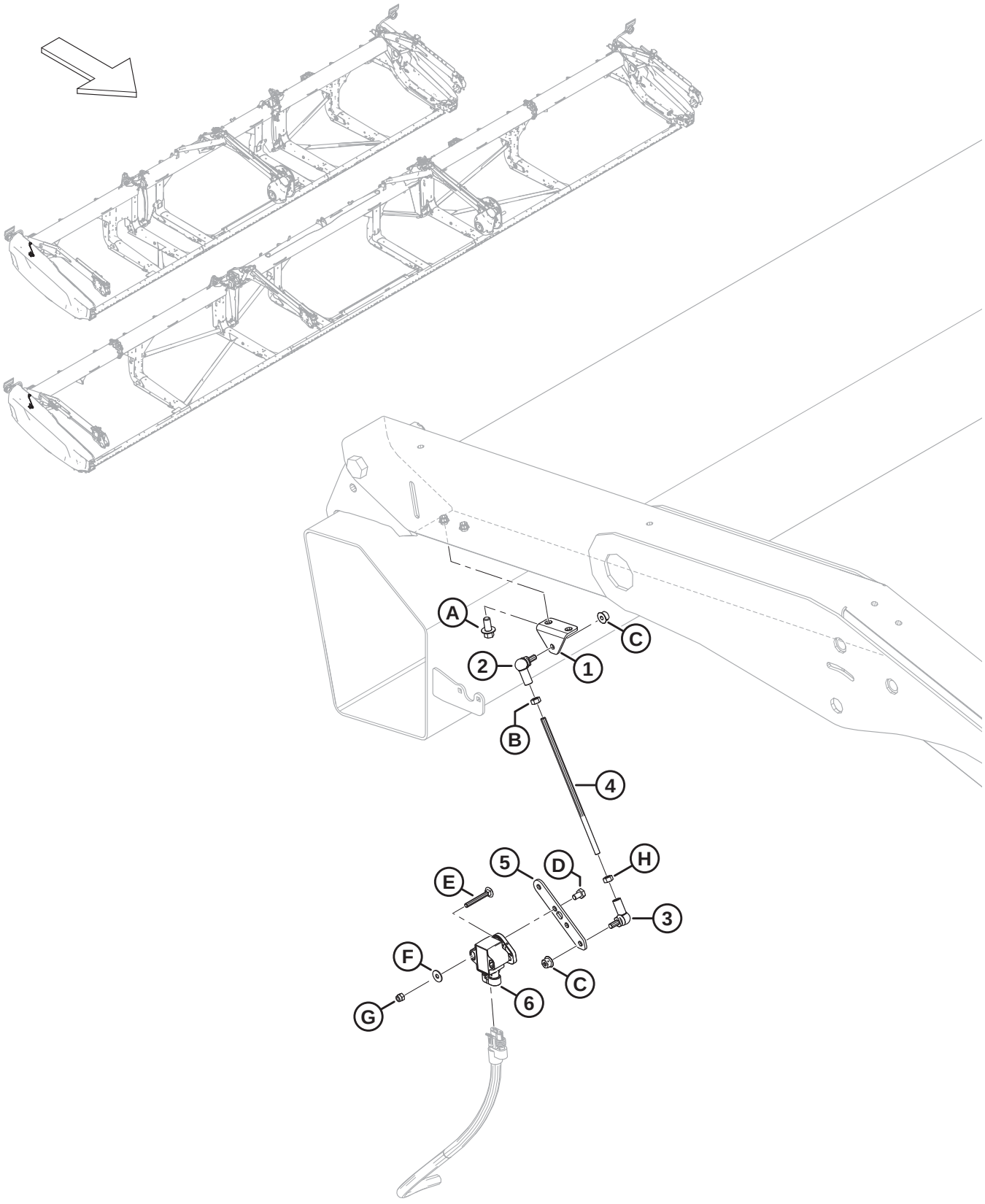

Ref	Part Number	Description	Qty	Serial Number
1	251881	BRACKET	1	
2	291484	BALL JOINT – RH THREAD	1	
3	291485	BALL JOINT – LH THREAD	1	
4	232676	ROD – THREADED	1	
5	251879	ARM – FLOAT SENSOR	1	
6	248643	ROTARY SENSOR – DUAL OUTPUT	1	
A	136485	BOLT – HEX FLG HD TFL M8 X 1.25 X 16-8.8-AA1J		
B	184683	NUT – HEX ISO 4032 M6 X 1-8-ZINC		
C	152668	NUT – HEX FLG CTR LOC M6 X 1-8		
D	136561	BOLT – HEX HD TFL M6 X 1 X 10-8.8-AA1J		
E	136604	BOLT – RHSN TFL M5 X 0.8 X 40-8.8-AA1J		
F	184701	WASHER – FLAT LARGE M5-200HV		
G	197230	NUT – HEX NYLOC M5 X 0.8-8-AA1J		
H	136613	NUT – HEX LH ISO 4032 M6 X 1-8 ZINC		

102 Electrical – Reel Fore-Aft Sensor

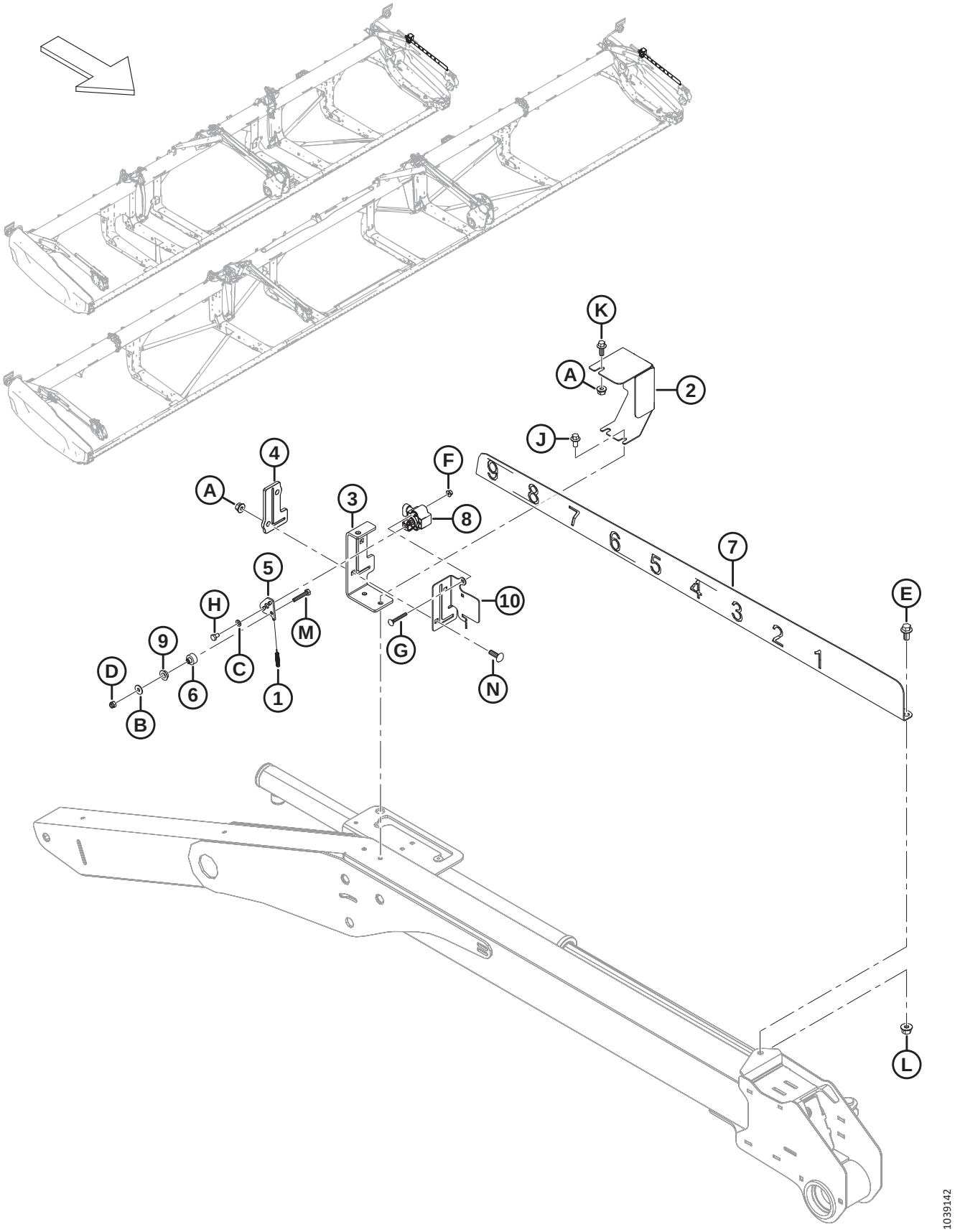

Ref	Part Number	Description	Qty	Serial Number
1	328556	SPRING – EXTENSION	1	
2	328547	COVER – F/A SENSOR	1	
3	340218	SUPPORT – REEL F/A INDICATOR	1	
4	311318	GUIDE – REEL F/A	1	
5	328539	ARM – F/A SENSOR	1	
6	328534	SPACER – SENSOR BUSHING	1	
7	328532	INDICATOR – REEL F/A	1	
8	248643	ROTARY SENSOR – DUAL OUTPUT	1	
9	206340	BUSHING – SHOULDER, M10	1	
10	**340183**	**PLATE – SENSOR SUPPORT**	**1**	
A	135337	NUT – HEX FLG CTR LK M8 X 1.25-8-AA1J		
B	184706	WASHER – FLAT LARGE M6-200HV		
C	184705	WASHER – FLAT M6-200HV-AA1J		
D	184685	NUT – HEX NYLOC M6 X 1-8-AA1J		
E	152655	BOLT – HEX FLG HD M10 X 1.5 X 20-8.8-AA1J		
F	136635	NUT – HEX FLG CTR LOC M5 X 0.8-8-AA1J		
G	197229	BOLT – RHSN TFL M5 X 0.8 X 35-4.6-AA1J		
H	136561	BOLT – HEX HD TFL M6 X 1 X 10-8.8-AA1J		
J	136485	BOLT – HEX FLG HD TFL M8 X 1.25 X 16-8.8-AA1J		
K	136300	BOLT – HEX FLG HD TFL M8 X 1.25 X 20-8.8-AA3L		
L	135799	NUT – HEX FLG CTR LOC M10 X 1.5-10		
M	109613	BOLT – HEX HD TFL M6 X 1 X 35-8.8-AA1J		
N	136824	BOLT – RHSSN M8 X 1.25 X 25-8.8-AA1J		

103 Electrical – Reel Speed Sensor, AGCO and CLAAS

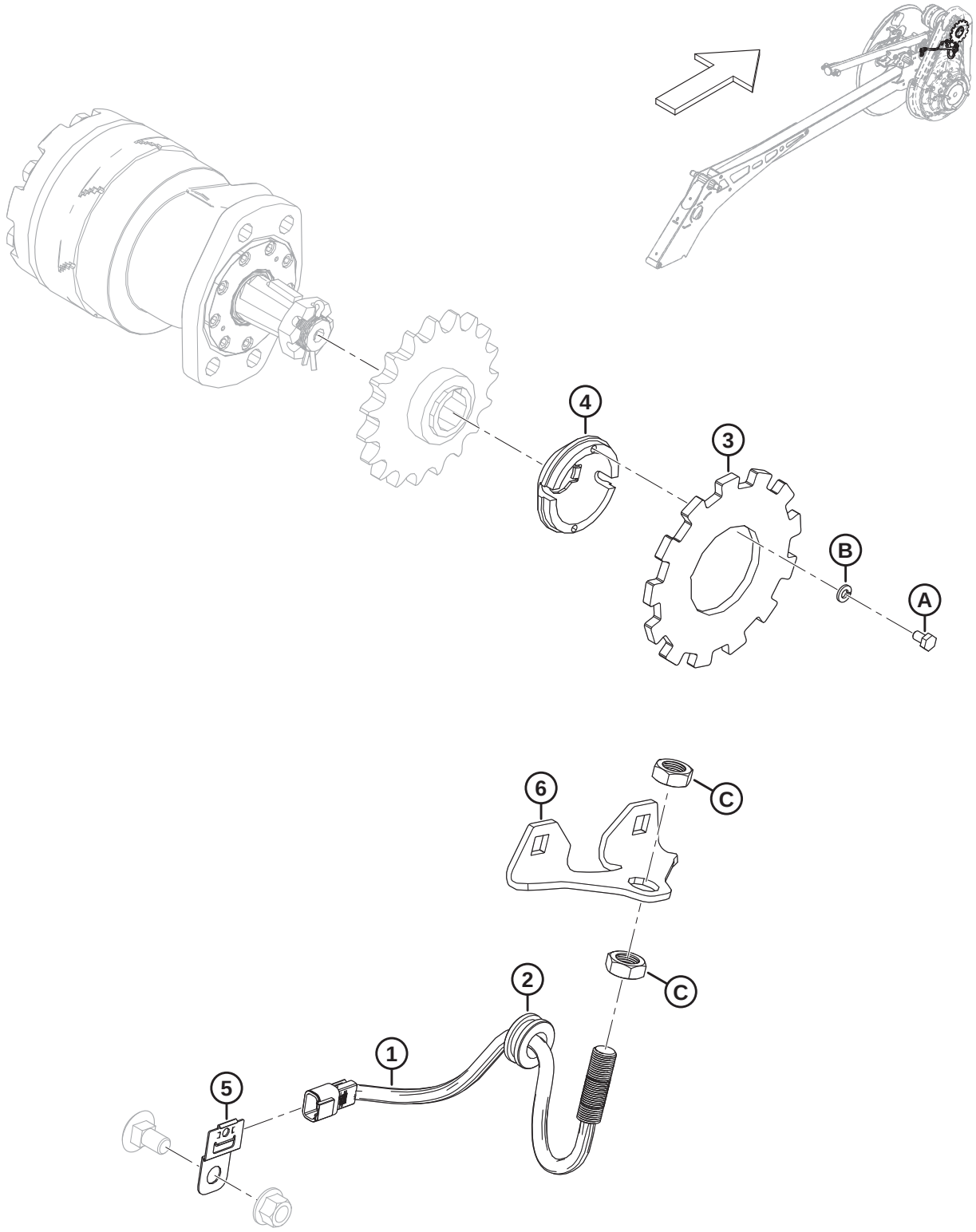

1034891

Ref	Part Number	Description	Qty	Serial Number
	B7065	KIT – REEL SPEED SENSOR 13T [264]		
1	136167	SENSOR – SPEED [265]	1	
2	273032	GROMMET – 3/4 IN. I.D. 1-3/8 IN. O.D.	1	
3	228473	DISC – **13T** REEL SPEED SENSOR	1	
4	228470	HUB – SENSOR	1	
5	500321	CLIP – DEUTSCH, DT, SIDE MOUNT	1	
6	328662	SUPPORT – REEL SPEED SENSOR	1	
A	136561	BOLT – HEX HD TFL M6 X 1 X 10-8.8-AA1J		
B	30631	WASHER – LOCK SPRING M6		
C	**7674**	**NUT – HEX JAM 3/4-16 UNF GR5 AA1J**		

264. Kits are available through Whole Goods only.
265. The speed sensor includes hex jam nuts (NSS).

104 Electrical – Reel Speed Sensor, John Deere

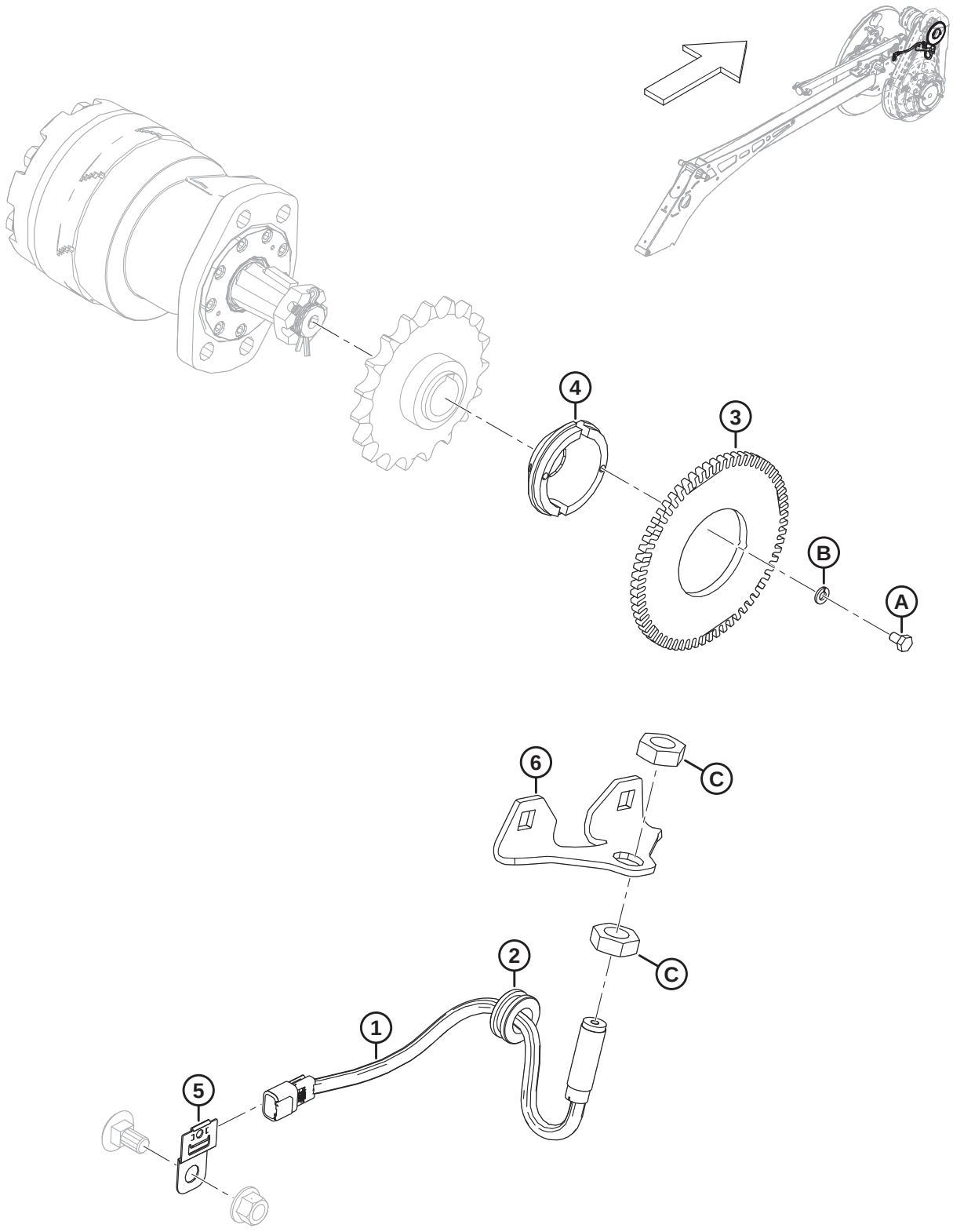

Ref	Part Number	Description	Qty	Serial Number
	B7064	KIT – REEL SPEED SENSOR 65T [266]		
1	328329	SENSOR – SPEED MODIFIED	1	
2	273032	GROMMET – 3/4 IN. I.D. 1-3/8 IN. O.D.	1	
3	228471	DISC – **65T** REEL SPEED SENSOR	1	
4	228470	HUB – SENSOR	1	
5	500321	CLIP – DEUTSCH, DT, SIDE MOUNT	1	
6	328662	SUPPORT – REEL SPEED SENSOR	1	
A	136561	BOLT – HEX HD TFL M6 X 1 X 10-8.8-AA1J		
B	30631	WASHER – LOCK SPRING M6		
C	7674	NUT – HEX JAM 3/4-16 UNF GR5 AA1J		

266. Kits are available through Whole Goods only.

105 Electrical – Reel Speed Sensor, Rostselmash

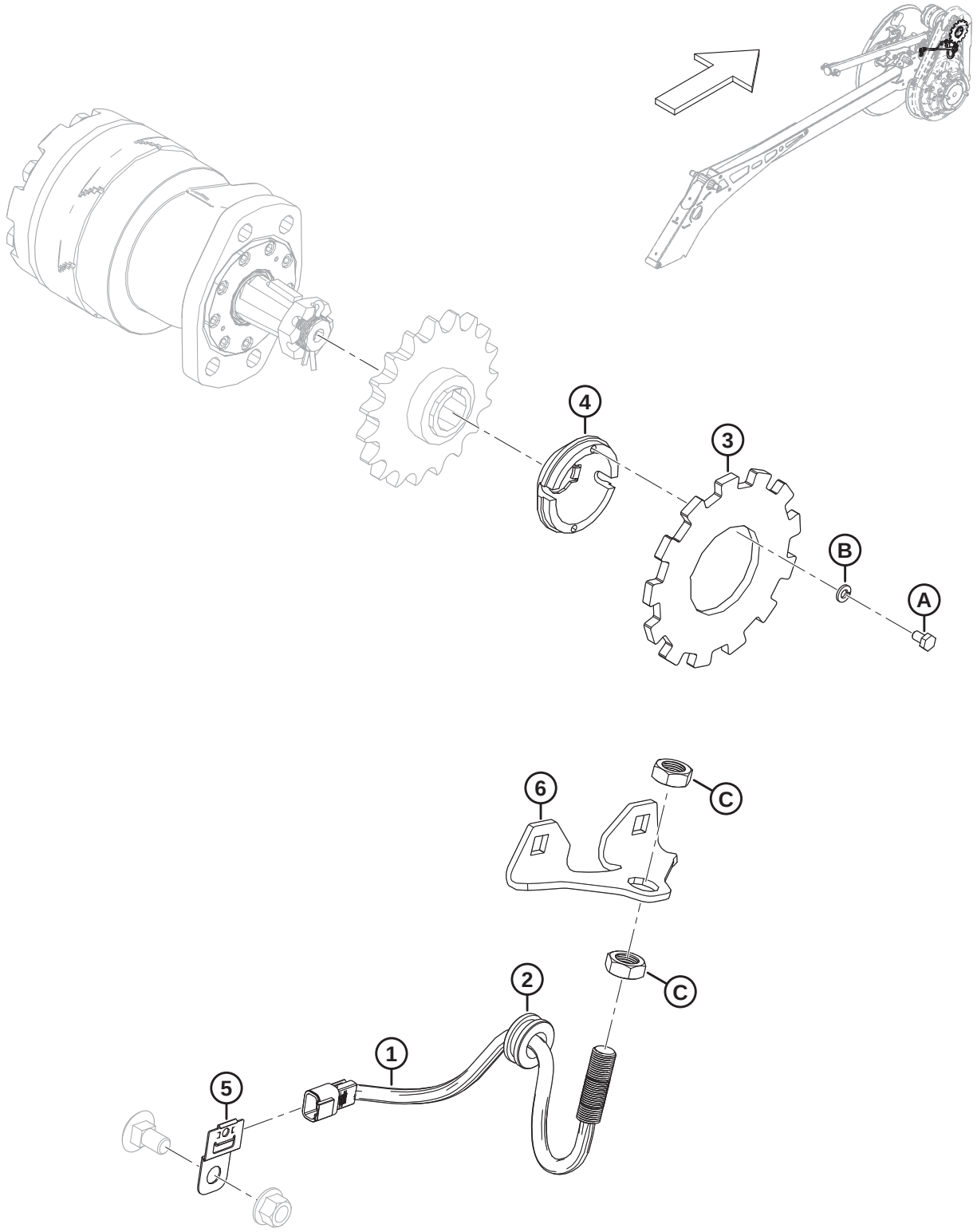

1039514

Ref	Part Number	Description	Qty	Serial Number
	B7408	**KIT – REEL SPEED SENSOR SPCL 13T** [267]		
1	**328329**	**SENSOR – SPEED MODIFIED**	**1**	
2	**273032**	**GROMMET – 3/4 IN. I.D. 1-3/8 IN. O.D.**	**1**	
3	**228473**	**DISC – 13T REEL SPEED SENSOR**	**1**	
4	**228470**	**HUB – SENSOR**	**1**	
5	**500321**	**CLIP – DEUTSCH, DT, SIDE MOUNT**	**1**	
6	**328662**	**SUPPORT – REEL SPEED SENSOR**	**1**	
A	**136561**	**BOLT – HEX HD TFL M6 X 1 X 10-8.8-AA1J**		
B	**30631**	**WASHER – LOCK SPRING M6**		
C	**7674**	**NUT – HEX JAM 3/4-16 UNF GR5 AA1J**		

267. Kits are available through Whole Goods only.

106 Decals and Reflectors – FD2 Series

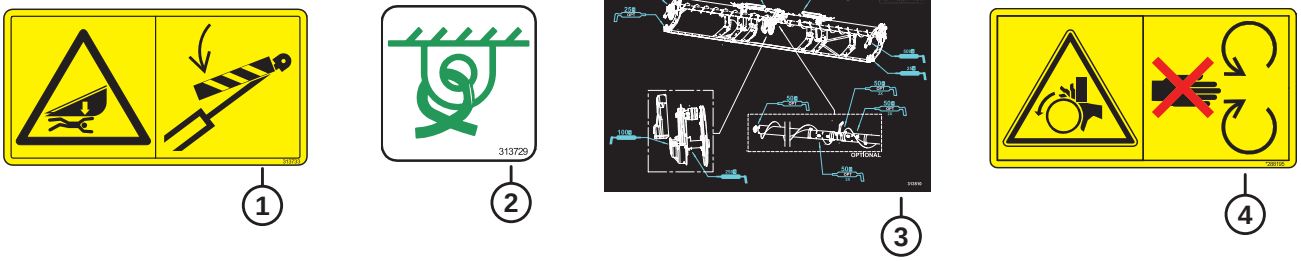



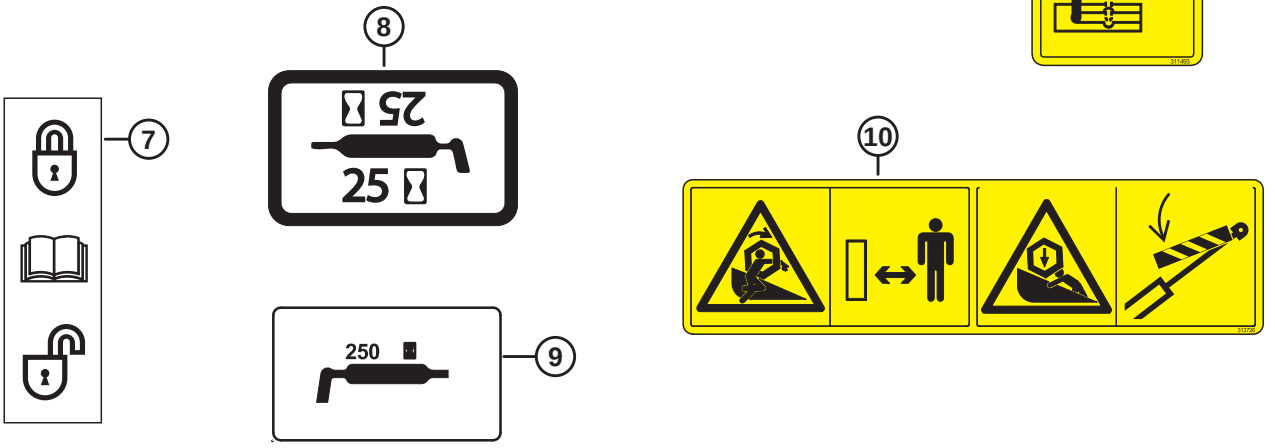

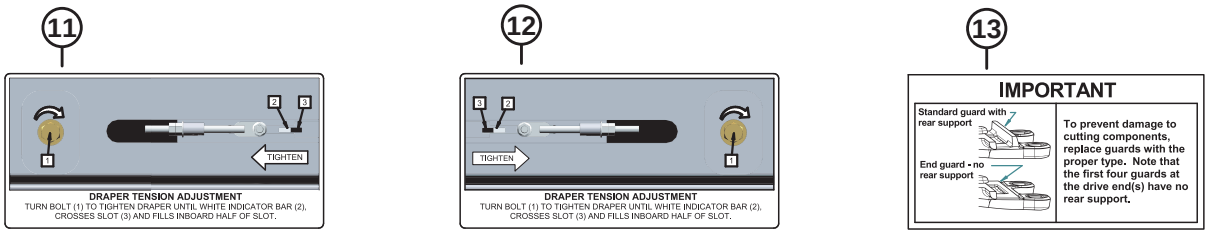

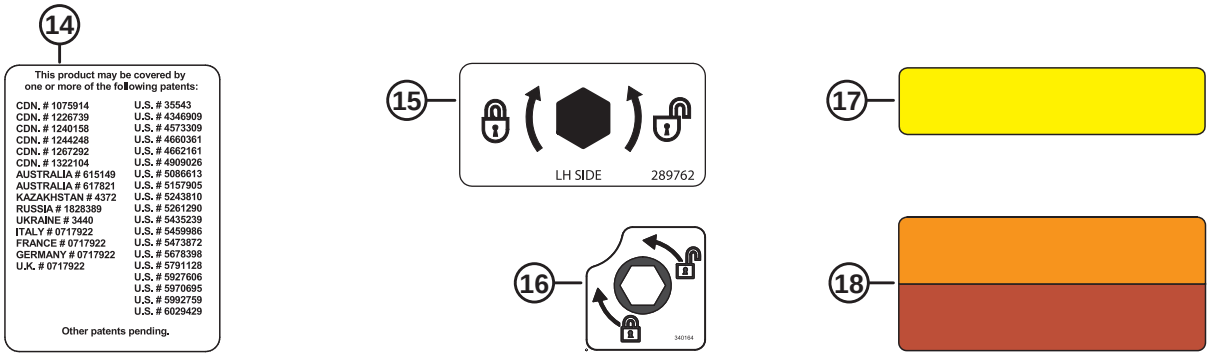

1039686

Ref	Part Number	Description	Qty	Serial Number
1	313733	DECAL – HEADER HAZARD		
2	313729	DECAL – TIE DOWN		
3	313510	DECAL – GREASE, FLX, DR, 2PC AUGER		
	313920	DECAL – GREASE, FLX, TR, 3PC AUGER		
4	288195	DECAL – ROTATING PART		
5	313725	DECAL – MANUAL/HPF/HAZARD		
6	311493	DECAL – CENTER REEL PROP LOCK		
7	165218	DECAL – WING LOCKOUT		
8	23164	DECAL – 25 HR LUBE		
	115759	**DECAL – GREASE 100 HR**		
9	323516	DECAL – GREASE (250 HRS)		
10	**360541**	**DECAL – REEL ENTANGLEMENT/HAZARD**		
11	279528	DECAL – RH DRAPER TENSION		
12	220084	DECAL – LH DRAPER TENSION		
13	129313	DECAL – IMPORTANT: GUARDS		
14	32070	DECAL – PATENT NUMBER		
15	289762	DECAL – DIVIDER LATCH-LH		
	289763	DECAL – DIVIDER LATCH-RH		
16	**340164**	**DECAL – CAM LATCH**		
17	115146	REFLECTOR – AMBER, 230 MM		
	273440	REFLECTOR – AMBER, 655 MM (8 IN. CENTER TUBE) [268]		
	165524	**REFLECTOR – RED, 230 MM** [269]		
18	313787	REFLECTOR – RED/ORANGE, 230 MM [270]		
	313730	REFLECTOR – RED/ORANGE, 230 MM (CLEARANCE LIGHTS) [271]		

268. The reflector is used on the reel center tubes.
269. The reflector is used on the right header endshield.
270. The reflector is used for plastic/PVC surfaces.
271. The reflector is used for metal surfaces.

107 Decals – Product Identification

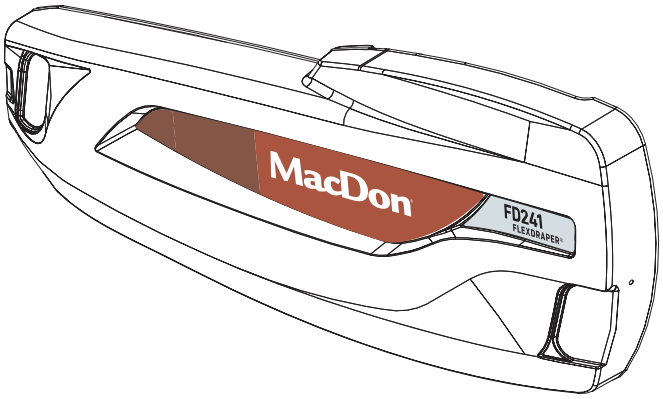

1

MacDon®

2

FD225
FLEXDRAPER®

3

FD230
FLEXDRAPER®

4

FD235
FLEXDRAPER®

5

FD240
FLEXDRAPER®

6

FD241
FLEXDRAPER®

7

FD245
FLEXDRAPER®

8

FD250
FLEXDRAPER®

9

FFT FLEX-FLOAT TECHNOLOGY™

1039290

Ref	Part Number	Description	Qty	Serial Number
1	313421	DECAL – MACDON RED, LH	1	
	313422	DECAL – MACDON RED, RH	1	
	313554	DECAL – MACDON GREEN, LH	1	
	313555	DECAL – MACDON GREEN, RH	1	
	313580	DECAL – MACDON YELLOW, LH	1	
	313581	DECAL – MACDON YELLOW, RH	1	
	313574	DECAL – MACDON GREY, LH	1	
	313575	DECAL – MACDON GREY, RH	1	
2	**340304**	**DECAL – FD225 MODEL NUMBER, LH**	**1**	
	340305	**DECAL – FD225 MODEL NUMBER, RH**	**1**	
3	313541	DECAL – FD230 MODEL NUMBER, LH	1	
	313542	DECAL – FD230 MODEL NUMBER, RH	1	
4	313543	DECAL – FD235 MODEL NUMBER, LH	1	
	313544	DECAL – FD235 MODEL NUMBER, RH	1	
5	313545	DECAL – FD240 MODEL NUMBER, LH	1	
	313546	DECAL – FD240 MODEL NUMBER, RH	1	
6	313547	DECAL – FD241 MODEL NUMBER, LH	1	
	313548	DECAL – FD241 MODEL NUMBER, RH	1	
7	313549	DECAL – FD245 MODEL NUMBER, LH	1	
	313550	DECAL – FD245 MODEL NUMBER, RH	1	
8	313551	DECAL – FD250 MODEL NUMBER, LH	1	
	313552	DECAL – FD250 MODEL NUMBER, RH	1	
9	245093	DECAL – FFT (FLEX-FLOAT TECHNOLOGY)	1	

108 Decals – Product Identification, Case

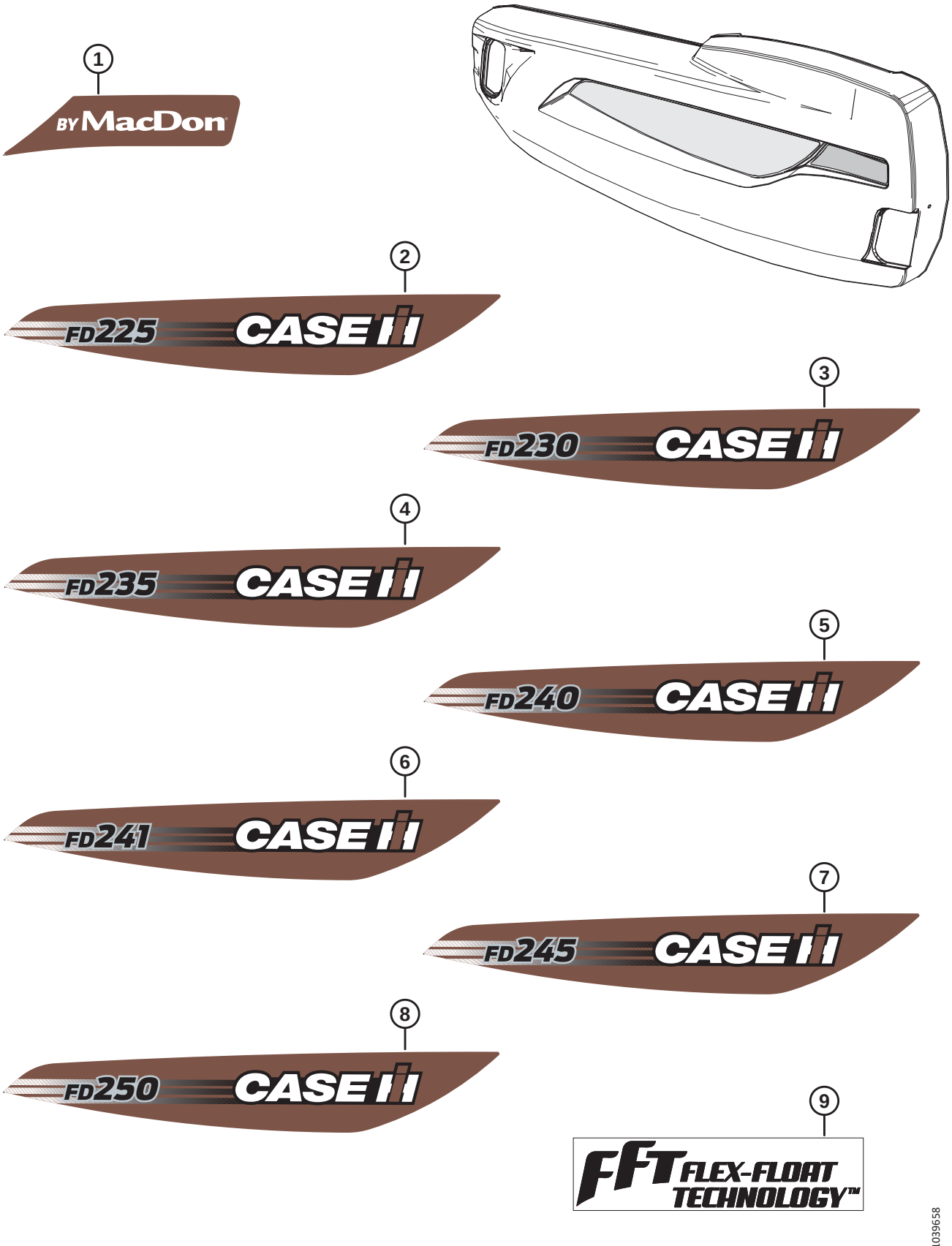

Ref	Part Number	Description	Qty	Serial Number
1	360419	DECAL – BY MACDON CIH RED, LH	1	
	360420	DECAL – BY MACDON CIH RED, RH	1	
2	360391	DECAL – FD225 CIH, LH	1	
	360392	DECAL – FD225 CIH, RH	1	
3	360393	DECAL – FD230 CIH, LH	1	
	360394	DECAL – FD230 CIH, RH	1	
4	360395	DECAL – FD235 CIH, LH	1	
	360396	DECAL – FD235 CIH, RH	1	
5	360397	DECAL – FD240 CIH, LH	1	
	360398	DECAL – FD240 CIH, RH	1	
6	360399	DECAL – FD241 CIH, LH	1	
	360400	DECAL – FD241 CIH, RH	1	
7	360401	DECAL – FD245 CIH, LH	1	
	360402	DECAL – FD245 CIH, RH	1	
8	360403	DECAL – FD250 CIH, LH	1	
	360404	DECAL – FD250 CIH, RH	1	
9	245093	DECAL – FFT (FLEX-FLOAT TECHNOLOGY)	1	

109 Decals – Product Identification, New Holland

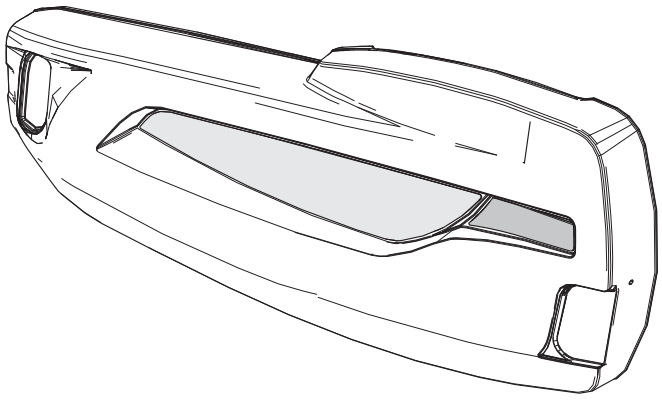

1

BY MacDon

2

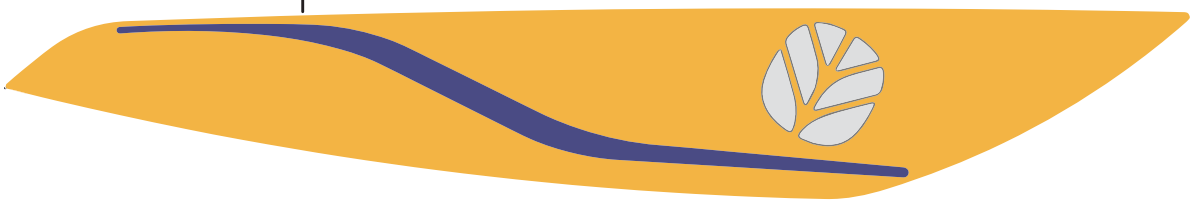

3

FD225

4

FD230

5

FD235

6

FD240

7

FD241

8

FD245

9

FD250

10

FFT FLEX-FLOAT TECHNOLOGY™

1039659

Ref	Part Number	Description	Qty	Serial Number
1	360421	DECAL – BY MACDON NH YEL, LH	1	
	360422	DECAL – BY MACDON NH YEL, RH	1	
2	360446	DECAL – NH YELLOW, LH	1	
	360447	DECAL – NH YELLOW, RH	1	
3	360405	DECAL – FD225 NH MODEL NBR	1	
4	360406	DECAL – FD230 NH MODEL NBR	1	
5	360407	DECAL – FD235 NH MODEL NBR	1	
6	360408	DECAL – FD240 NH MODEL NBR	1	
7	360409	DECAL – FD241 NH MODEL NBR	1	
8	360410	DECAL – FD245 NH MODEL NBR	1	
9	360411	DECAL – FD250 NH MODEL NBR	1	
10	245093	DECAL – FFT (FLEX-FLOAT TECHNOLOGY)	1	

110 Decals – French



1



2



3



4

1036707

DECALS – FRENCH

Ref	Part Number	Description	Qty	Serial Number
1	340049	DECAL – OIL, IMPORTANT, FRENCH		
2	245433	DECAL – IMPORTANT: GUARDS, FRENCH		
3	245432	DECAL – RH DRAPER TENSION, FRENCH		
4	245428	DECAL – LH DRAPER TENSION, FRENCH		

111 Decals – Portuguese



1



2



3



4

1036719

DECALS – PORTUGUESE

Ref	Part Number	Description	Qty	Serial Number
1	340051	DECAL – OIL, IMPORTANT, PORTUGUESE		
2	220817	DECAL – IMPORTANT: GUARDS, PORTUGUESE		
3	220836	DECAL – RH DRAPER TENSION, PORTUGUESE		
4	220824	DECAL – LH DRAPER TENSION, PORTUGUESE		

112 Decals – Russian







РЕГУЛИРОВКА НАТЯЖЕНИЯ ПОЛОТНА
ПОВОРАЧИВАЙТЕ БОЛТ (1) ДЛЯ НАТЯЖЕНИЯ ПОЛОТНА ПОКА БЕЛЫЙ ИНДИКАТОР (2), НЕ ПЕРЕМЕСТИТСЯ В СЕРЕДИНУ ПРОРЕЗИ (3) С ВНУТРЕННЕЙ СТОРОНЫ



РЕГУЛИРОВКА НАТЯЖЕНИЯ ПОЛОТНА
ПОВОРАЧИВАЙТЕ БОЛТ (1) ДЛЯ НАТЯЖЕНИЯ ПОЛОТНА ПОКА БЕЛЫЙ ИНДИКАТОР (2), НЕ ПЕРЕМЕСТИТСЯ В СЕРЕДИНУ ПРОРЕЗИ (3) С ВНУТРЕННЕЙ СТОРОНЫ

1036727

DECALS – RUSSIAN

Ref	Part Number	Description	Qty	Serial Number
1	340052	DECAL – OIL, IMPORTANT, RUSSIAN		
2	220832	DECAL – IMPORTANT: GUARDS, RUSSIAN		
3	220834	DECAL – RH DRAPER TENSION, RUSSIAN		
4	220831	DECAL – LH DRAPER TENSION, RUSSIAN		

113 Decals – Spanish



1



2



3



4

1036716

DECALS – SPANISH

Ref	Part Number	Description	Qty	Serial Number
1	340050	DECAL – OIL, IMPORTANT, SPANISH		
2	220807	DECAL – IMPORTANT: GUARDS, SPANISH		
3	220835	DECAL – RH DRAPER TENSION, SPANISH		
4	220814	DECAL – LH DRAPER TENSION, SPANISH		

114 (Option) ContourMax™ – Outer Contour Wheels

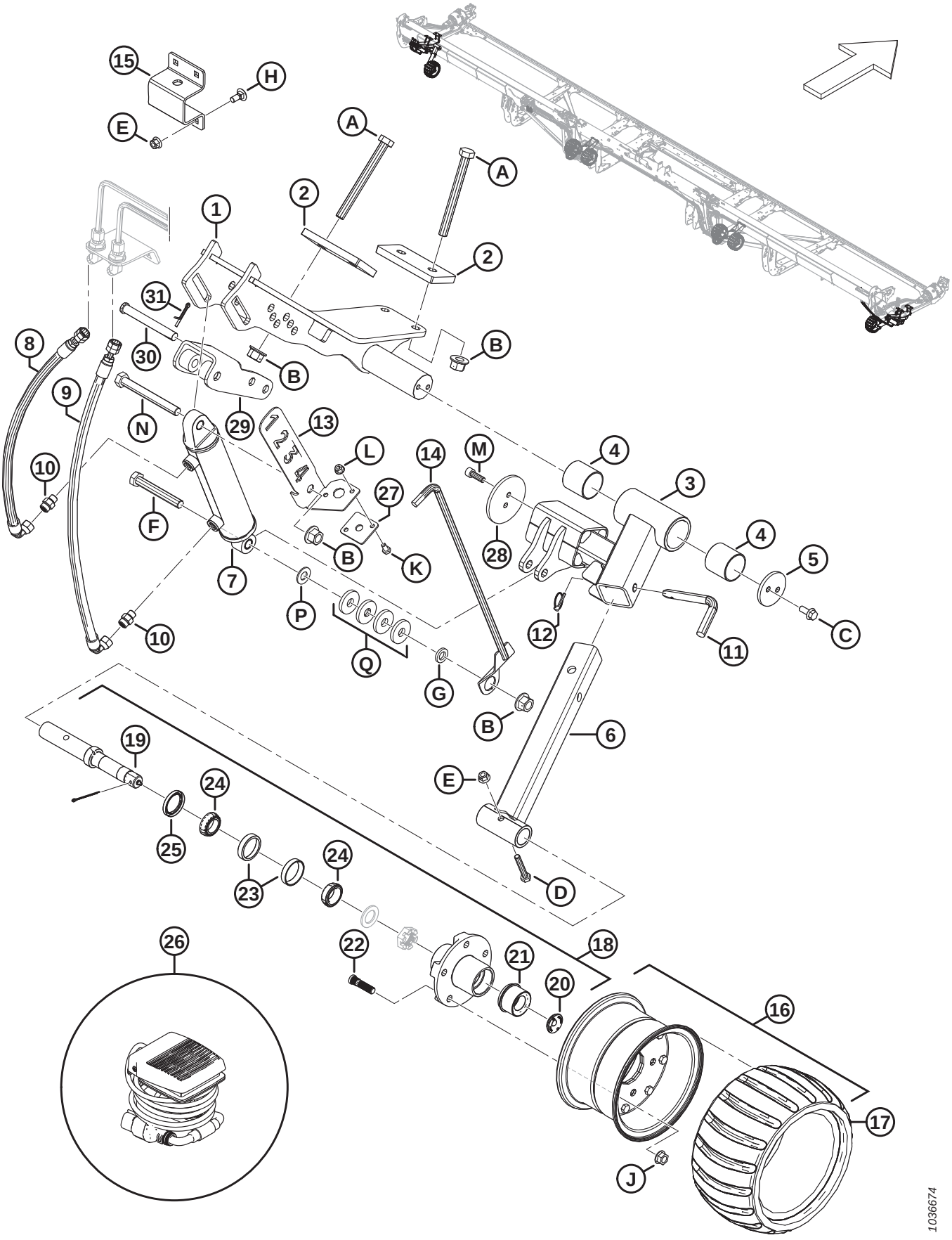

Ref	Part Number	Description	Qty	Serial Number
	B7389	**KIT – CONTOURMAX CONTOUR WHEELS** [272]		
1	233980	MOUNT WELDT – LH OUTER	1	
	233960	MOUNT WELDT – RH OUTER	1	
2	233874	PLATE – BACKING 85 MM	4	
3	313913	TOP OUTER ARM – ASSY [273]	2	
4	313020	BUSHING – PLASTIC	4	
5	233870	RETAINER	2	
6	313914	LOWER OUTER SUPPORT – WELDT	2	
7	313012	CYLINDER – HYD (LH)	1	
	313794	SEAL KIT		
	258391	BUSHING		
	313011	CYLINDER – HYD (RH)	1	
	313793	SEAL KIT		
	258391	BUSHING		
8	360452	HOSE – HYD	2	
9	283779	HOSE – HYD	2	
10	135778	FITTING – ADAPTER	4	
11	313921	PIN – LOCKING	2	
12	50193	PIN – LYNCH	2	
13	**NSS**	BRACKET – INDICATOR (LH ONLY) [274]	1	
	360358	**KIT – ASSY, CONTMAX GAUGE SERV** [275]	**1**	
14	**NSS**	HEIGHT INDICATOR – WELDT (LH ONLY) [274]	1	
	360358	**KIT – ASSY, CONTMAX GAUGE SERV** [275]	**1**	
15	313922	STRAP – WHEEL STORAGE (LH ONLY)	1	
16	313368	CONTOUR WHEEL – ASSY [276]	2	
17	313366	TIRE – CONTOUR WHEEL	2	
18	313114	SPINDLE – ASSY [277]	2	
19	313859	SPINDLE – SHAFT	2	
20	284705	PLUG – RUBBER	2	
21	284706	CAP – EZ LUBE	2	
22	284707	STUD	10	
23	284708	BEARING – CUP, 47MM	2	
24	284709	BEARING – CONE, 44MM	2	

272. The kit includes all listed inner and outer wheel parts to complete the install on a ContourMax™ ready header. If your header is not factory configured you will also need one of the following bundles, refer to Sections *91 Hydraulics – ContourMax™, Contour Wheels (FD235), page 211* or *92 Hydraulics – ContourMax™, Contour Wheels (FD240, FD241, FD245, and FD250), page 213*. Kits are available through Whole Goods only.
273. The arm assembly includes two plastic bushings (MD #313020).
274. Indicator bracket (MD #340703) and height indicator (MD #313447) have been superseded with service kit (MD #360358).
275. For service parts, refer to Section *116 (Option) ContourMax™ – Gauge Service Kit, page 269*.
276. The wheel assembly includes tire (MD #313366).
277. The spindle assembly includes spindle shaft (MD #313859), rubber plug (MD #284705), EZ lube cap (MD #284706), five studs (MD #284707), 47 mm cup bearing (MD #284708), 44 mm cone bearing (MD #284709), seal (MD #284710), slotted nut (NSS), and washer (NSS).

(OPTION) CONTOURMAX™ – OUTER CONTOUR WHEELS

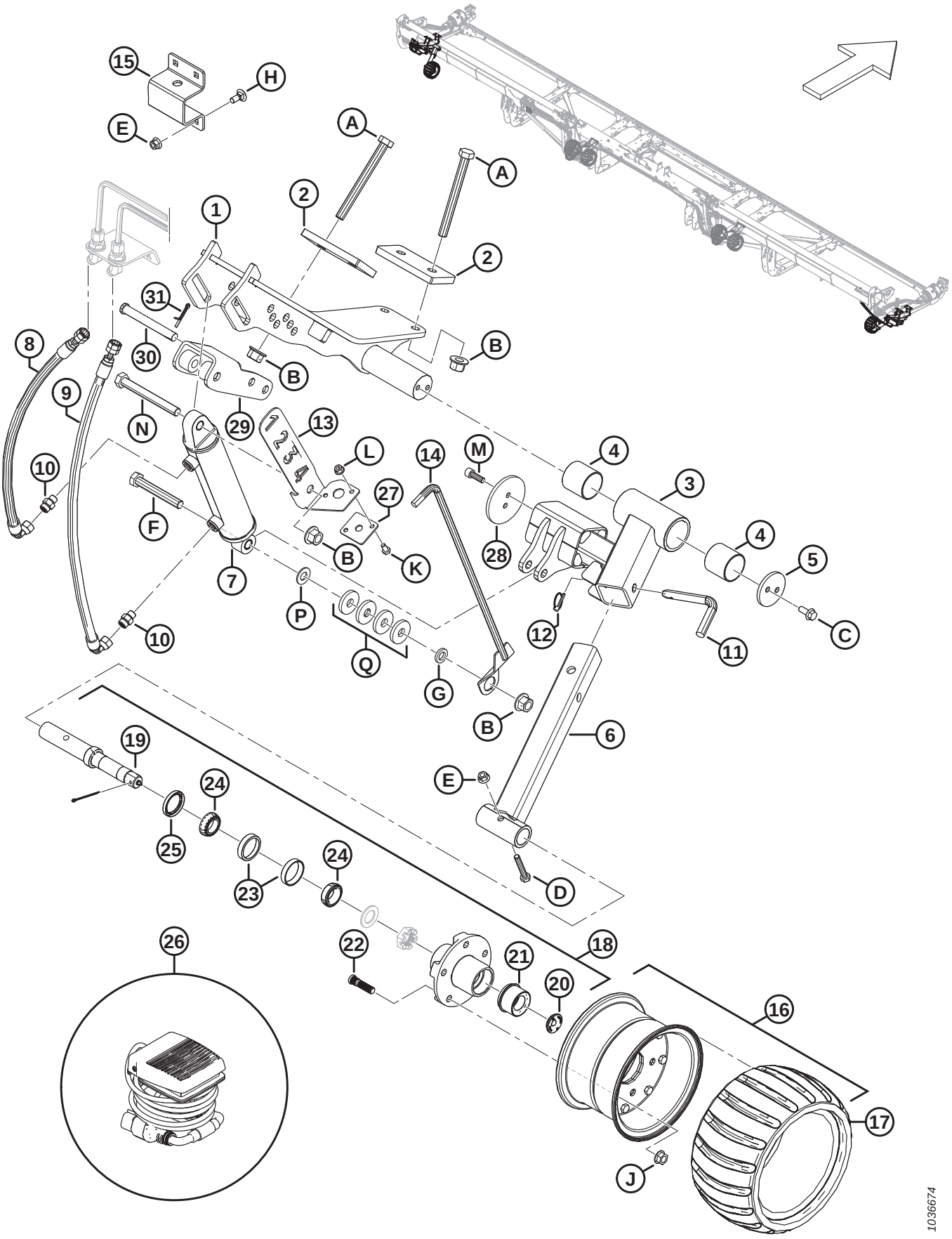

(OPTION) CONTOURMAX™ – OUTER CONTOUR WHEELS

Ref	Part Number	Description	Qty	Serial Number
25	284710	SEAL	2	
26	314581	HARNESS – FOOT PEDAL	1	
27	313441	GUIDE – INDICATOR	1	
28	233920	RETAINER – BOLT ON 3.75 IN. DISC	2	
29	233975	ADJ WELDT – CONTOURMAX	2	
30	113813	PIN – CLEVIS, 15.71 MM, 115 MM, ZN PL	2	
31	18608	PIN – COTTER 3/16 DIA X 1.5 ZP	2	
A	320122	BOLT – HEX HD M16 X 2 X 160-10.9-ZINC		
B	136440	NUT – HEX FLG CTR LK M16 X 2-10-AA1J		
C	135783	BOLT – HEX FLG HD TFL M10 X 1.5 X 25-10.9-AA1J		
D	184664	BOLT – HEX HD M10 X 1.5 X 60-8.8-AA1J		
E	135799	NUT – HEX FLG CTR LOC M10 X 1.5-10		
F	136159	BOLT – HEX HD M16 X 2 X 110-8.8-AA1J (LH ONLY)		
	152602	BOLT – HEX HD M16 X 2 X 80-10.9-AA1J (RH ONLY)		
G	103361	WASHER – FLAT (LH ONLY)		
H	135785	BOLT – RHSN M10 X 1.5 X 25-8.8-AA1J		
J	188470	NUT – FLG DT SMFC 1/2-20 UNF GR 8 AA1J		
K	50139	BOLT – HEX HD TFL M8 X 1.25 X 16-8.8-AA1J		
L	135337	NUT – HEX FLG CTR LK M8 X 1.25-8-AA1J		
M	135401	SCREW – HEX SOC HD TFL M10 X 1.5 X 30-8.8-AA1J		
N	184677	BOLT – HEX HD M16 X 2 X 140-8.8-AA1J		
P	18600	WASHER – FLAT SAE 21/32 ID X 1 5/16 OD AA1J (LH ONLY)		
Q	4762	WASHER – FLAT, 2/3 IN. ID, 1 13/16 IN. OD, 1/4 IN. THK (LH ONLY)		

115 (Option) ContourMax™ – Inner Contour Wheels

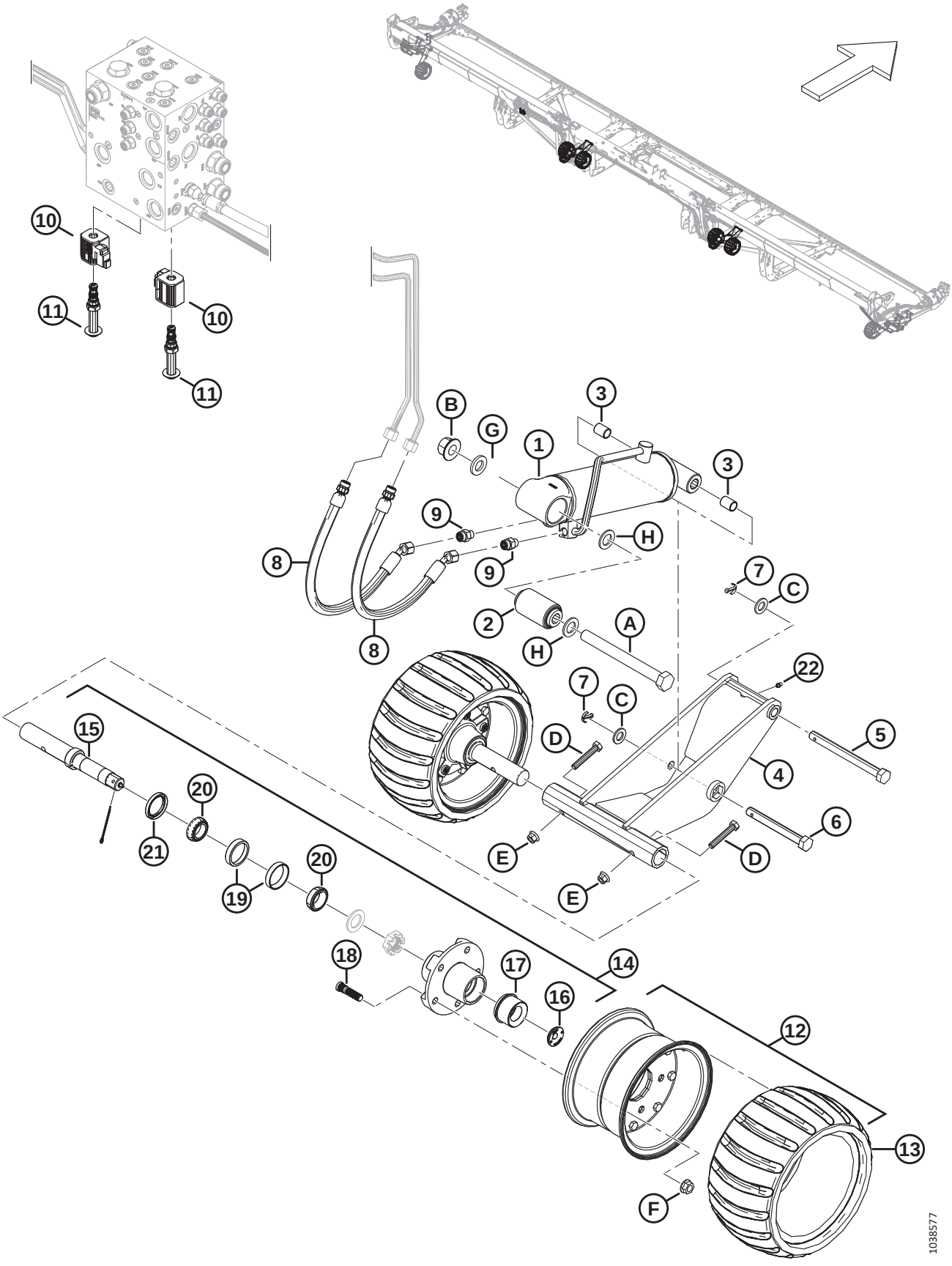

Ref	Part Number	Description	Qty	Serial Number
	B7389	**KIT – CONTOURMAX CONTOUR WHEELS** [278]		
1	313776	LH CYLINDER ISOLATOR – ASSY [279]	1	
	313791	SEAL KIT		
	313777	RH CYLINDER ISOLATOR – ASSY [279]	1	
	313792	SEAL KIT		
2	313007	BUSHING – BONDED RUBBER	2	
3	258391	BUSHING	4	
4	323478	ASSEMBLY – CONTOURMAX W/ ZERK [280]	2	
5	313748	PIN – HEX HD 5/8 X 7 IN. LG-ZINC	2	
6	313753	PIN – HEX HD 5/8 X 5.25 LG ZINC	2	
7	18648	PIN – COTTER 3/16 DIA X 1.25 ZP	4	
8	283783	HOSE – HYD	4	
	135865	O-RING Ø1.78 X Ø9.25		
9	135778	FITTING – ADAPTER	4	
10	287449	COIL – 12VDC - .625IN	2	
11	287450	VALVE – POPPET	2	
12	313368	CONTOUR WHEEL – ASSY [281]	4	
13	313366	TIRE – CONTOUR WHEEL	4	
14	313114	SPINDLE – ASSY [282]	4	
15	313859	SPINDLE – SHAFT	4	
16	284705	PLUG – RUBBER	4	
17	284706	CAP – EZ LUBE	4	
18	284707	STUD	20	
19	284708	BEARING – CUP, 47MM	4	
20	284709	BEARING – CONE, 44MM	4	
21	284710	SEAL	4	
22	18671	FITTING – LUBE 1/4 - 28 UNF	2	
A	320331	BOLT – HEX HD M20 X 2.5 X 200-10.9-ZINC		
B	136122	NUT – HEX FLG CTR LOC M20 X 2.5-10-AA1J		
C	184717	WASHER – FLAT REG M16-200HV-AA1J		
D	184664	BOLT – HEX HD M10 X 1.5 X 60-8.8-AA1J		
E	135799	NUT – HEX FLG CTR LOC M10 X 1.5-10z		
F	188470	NUT – FLG DT SMFC 1/2-20 UNF GR 8 AA1J		

278. The kit includes all listed inner and outer wheel parts to complete the install on a ContourMax™ ready header. If your header is not factory configured you will also need one of the following bundles, refer to Sections *91 Hydraulics – ContourMax™, Contour Wheels (FD235), page 211* or *92 Hydraulics – ContourMax™, Contour Wheels (FD240, FD241, FD245, and FD250), page 213*. Kits are available through Whole Goods only.
279. The cylinder isolator assembly includes bonded rubber bushing (MD #313007) and two bushings (MD #258391).
280. Includes lube fitting (MD #18671) and 100-hour grease decal (MD #115759).
281. The wheel assembly includes tire (MD #313366).
282. The spindle assembly includes spindle shaft (MD #313859), rubber plug (MD #284705), EZ lube cap (MD #284706), five studs (MD #284707), 47 mm cup bearing (MD #284708), 44 mm cone bearing (MD #284709), and seal (MD #284710).

(OPTION) CONTOURMAX™ – INNER CONTOUR WHEELS

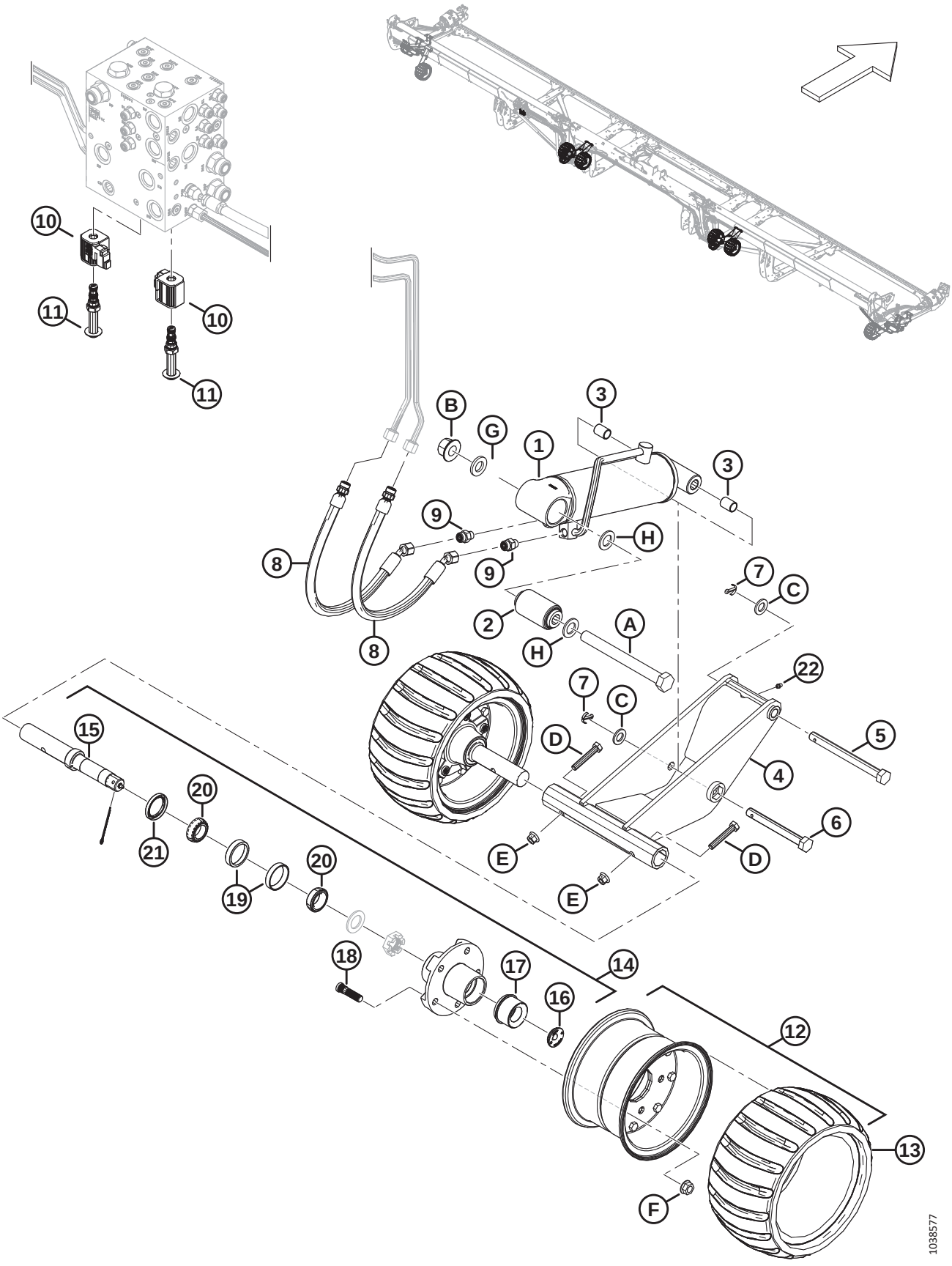

Ref	Part Number	Description	Qty	Serial Number
G	21540	WASHER – HARD ASTM F436M20-340HV-AB2C		
H	136477	WASHER – FLAT REG M20-200HV		

116 (Option) ContourMax™ – Gauge Service Kit

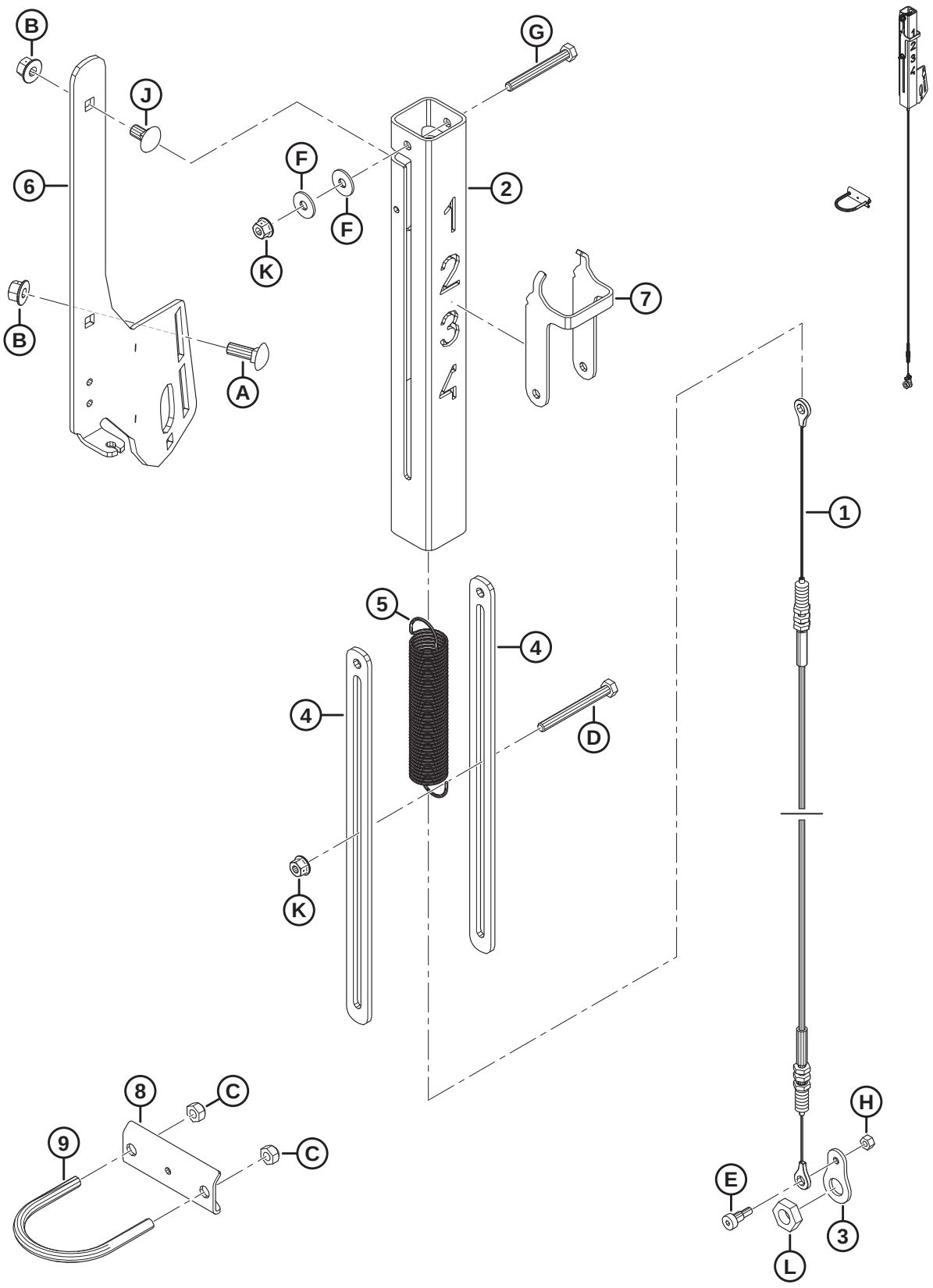

(OPTION) CONTOURMAX™ – GAUGE SERVICE KIT

Ref	Part Number	Description	Qty	Serial Number
	360358	KIT – ASSY, CONTMAX GAUGE SERV		
1	360559	CABLE – CONTOURMAX	1	
2	360551	TUBE – CONTOURMAX INDICATOR	1	
3	360526	PLATE – CABLE CONNECTION	1	
4	233950	SPACER – CONTOURMAX INDICATOR	2	
5	233906	SPRING – CONTOURMAX	1	
6	233900	BRACKET – CONTOURMAX INDICATOR	1	
7	233891	INDICATOR – CONTOUR WHEEL	1	
8	233964	ANCHOR – INDICATOR CABLE	1	
9	47225	BOLT – U	1	
A	184662	BOLT – RHSN TFL M10 X 1.5 X 30-8.8-AA1J		
B	135799	NUT – HEX FLG CTR LOC M10 X 1.5-10		
C	18669	NUT-HEX LK DT 3/8-16 UNC GR5 AA1J		
D	252421	BOLT-HEX HD M 8X 1.25 X 80-8.8-AA2L		
E	197135	SCREW – HEX SOC HD SHLDR M8 X 10		
F	184709	WASHER – FLAT LARGE M8-200HV		
G	184656	BOLT – HEX HD M8 X 1.25 X 70-8.8-AA1J		
H	136773	NUT – HEX CTR LOC M6 X 1-8-AA1J		
J	136178	BOLT – RHSN M10 X 1.5 X 20-8.8-AA1J		
K	135337	NUT – HEX FLG CTR LK M8 X 1.25-8-AA1J		
L	320218	NUT – HEX THIN M16 X 2-SPCL-5-ZINC		

117 (Option) ContourMax™ – Height Sensing – John Deere X9 Series

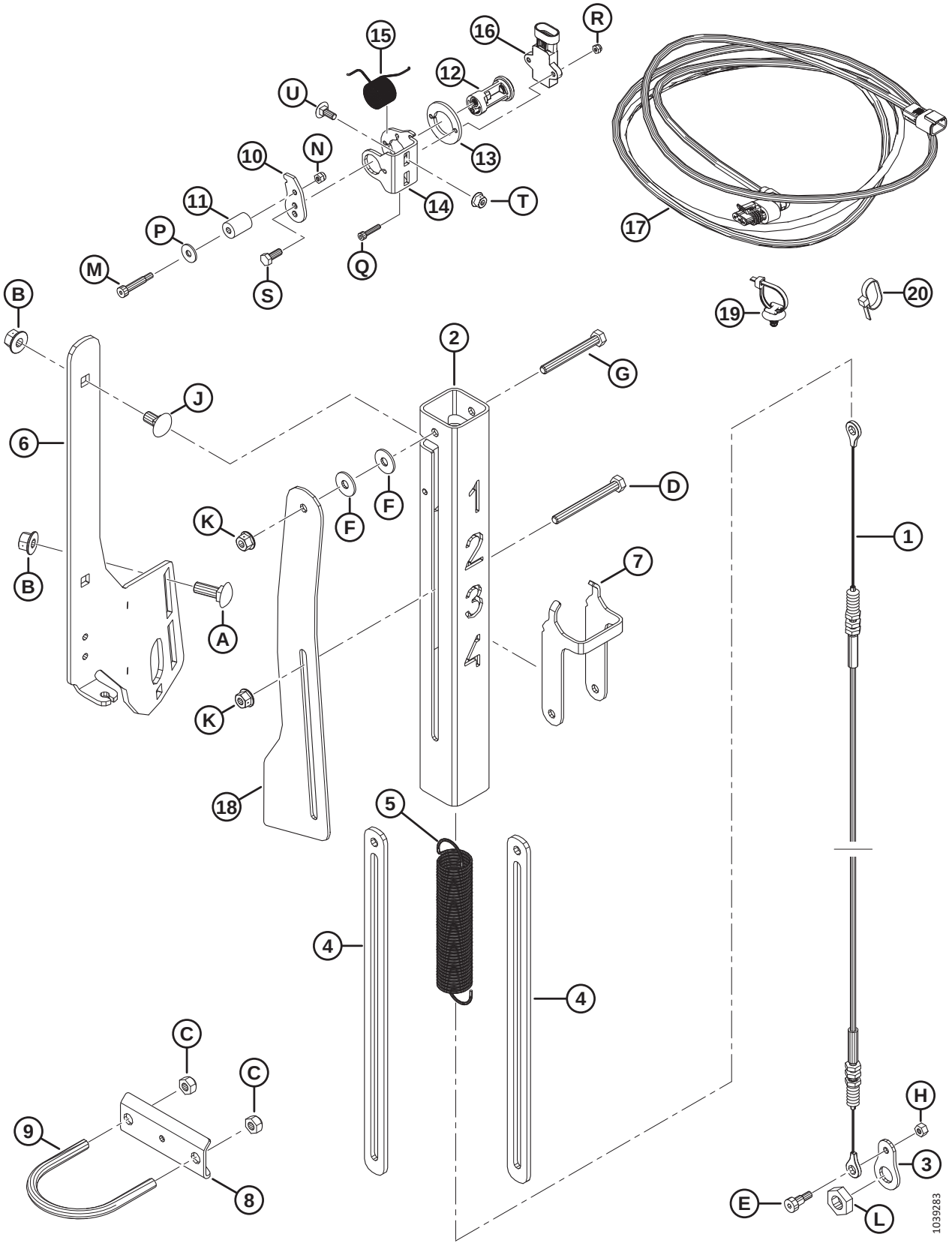

Ref	Part Number	Description	Qty	Serial Number
	360358	**KIT – ASSY, CONTMAX GAUGE SERV**		
	B7350	KIT – CONTOURMAX SENSOR [283]		
1	360559	CABLE – CONTOURMAX	1	
2	360551	TUBE – CONTOURMAX INDICATOR	1	
3	360526	PLATE – CABLE CONNECTION	1	
4	233950	SPACER – CONTOURMAX INDICATOR	2	
5	233906	SPRING – CONTOURMAX	1	
6	233900	BRACKET – CONTOURMAX INDICATOR	1	
7	233891	INDICATOR – CONTOUR WHEEL	1	
8	233964	ANCHOR – INDICATOR CABLE	1	
9	47225	BOLT – U	1	
10	340956	ARM – SENSOR	1	
11	340289	ROLLER – 5/8 IN. O.D.	1	
12	352163	ASSY – SENSOR PIVOT	1	
13	352001	SPACER – SENSOR	1	
14	340955	SUPPORT – SENSOR	1	
15	340954	SPRING – TORSION	1	
16	328412	SENSOR – ROTARY, 5V CONTACTLESS	1	
17	323694	HARNESS – EXT. CONTOUR POS.	1	
18	323499	LINK – CONTOURMAX SENSOR	1	
19	136655	FASTENER – FIR TREE MT W/ TIE	2	
20	21763	FASTENER – CABLE TIE, BLACK	13	
A	184662	BOLT – RHSN TFL M10 X 1.5 X 30-8.8-AA1J		
B	135799	NUT – HEX FLG CTR LOC M10 X 1.5-10		
C	18669	NUT-HEX LK DT 3/8-16 UNC GR5 AA1J		
D	252421	BOLT-HEX HD M 8X 1.25 X 80-8.8-AA2L		
E	197135	SCREW – HEX SOC HD SHLDR M8 X 10		
F	184709	WASHER – FLAT LARGE M8-200HV		
G	184656	BOLT – HEX HD M8 X 1.25 X 70-8.8-AA1J		
H	136773	NUT – HEX CTR LOC M6 X 1-8-AA1J		
J	136178	BOLT – RHSN M10 X 1.5 X 20-8.8-AA1J		
K	135337	NUT – HEX FLG CTR LK M8 X 1.25-8-AA1J		
L	320218	NUT – HEX THIN M16 X 2-SPCL-5-ZINC		
M	320409	SCREW – HEX SOC HD SHLD R6 X 25-M 5 X0.8 X 9.5-12.9-ZINC		
N	197230	NUT – HEX NYLOC M5 X 0.8-8-AA1J		
P	184706	WASHER – FLAT LARGE M6-200HV		
Q	320410	SCREW – HEX SOC HDM4 X 0.7 X 20-A2SS		
R	320390	NUT – HEX NYLOC M4 X0.7-8-A2-SS		
S	184642	BOLT – HEX HD TFL M6 X 1 X 16-8.8-AA1J		
T	152668	NUT – HEX FLG CTR LOC M6 X 1-8		
U	136748	BOLT – RHSN M6 X 1 X 16-8.8-ZINC		

283. Kits are available through Whole Goods only.

118 (Option) Crop Lifters and Storage Rack

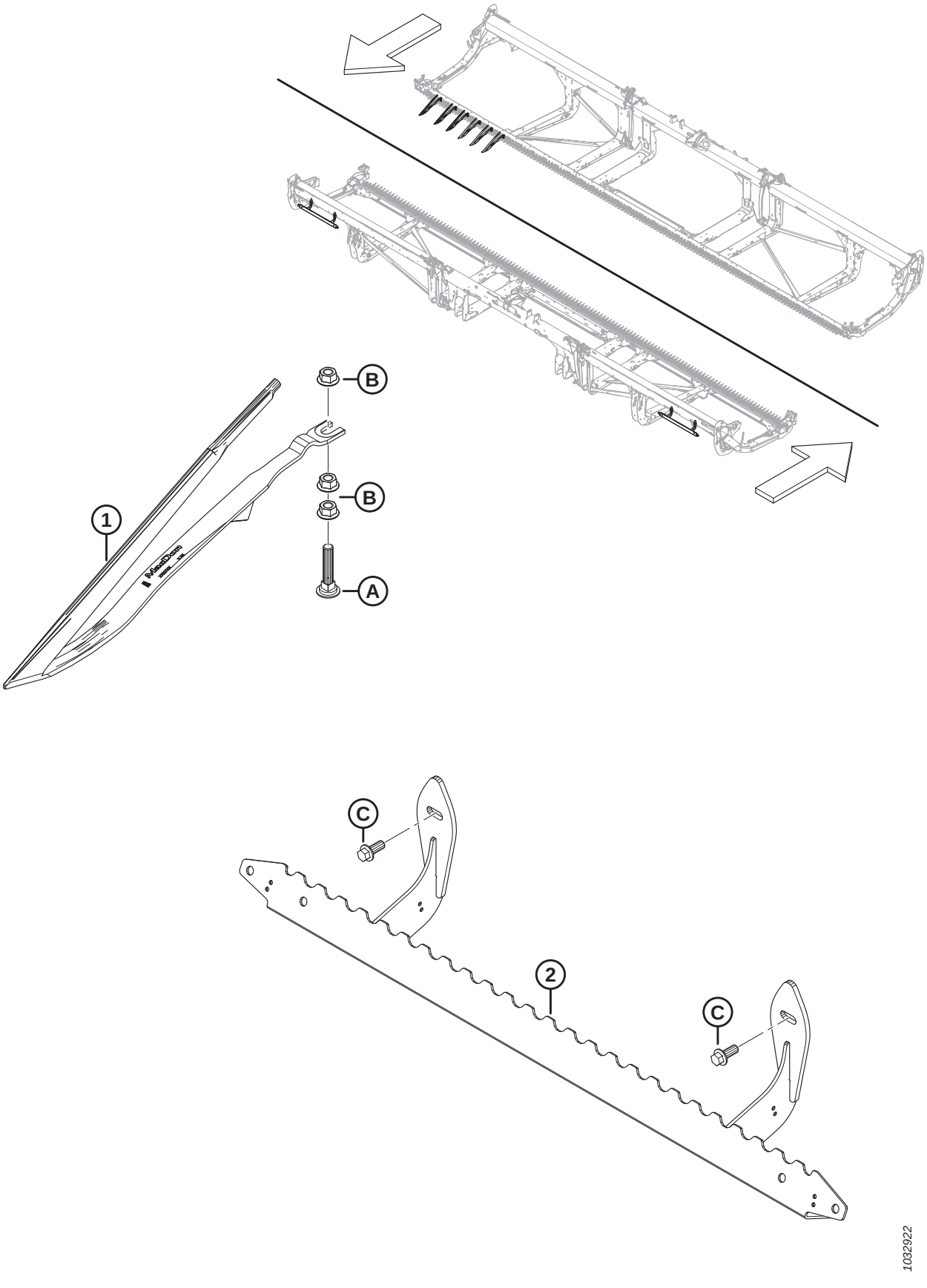

(OPTION) CROP LIFTERS AND STORAGE RACK

Ref	Part Number	Description	Qty	Serial Number
	B7022	KIT – CROP LIFTER [284]		
	B7023	KIT – LIFTER STORAGE RACK [285]		
1	233748	DEFLECTOR – CROP LIFTER	A/R	
2	233770	SUPPORT – LIFTER STORAGE WELDT	1	
A	226280	BOLT – RHSN SPCL M12 X 60-8.8		
B	136036	NUT – HEX SM FLG M12 X 1.75-8-AA1J		
C	136312	BOLT – HEX FLG HD TFL M10 X 1.5 X 25-10.9-AA1J		

284. Crop lifters are recommended for severely lodged cereal crops where the Operator wants maximum possible stubble height. Quantity of kits required varies depending on header size: FD225 and FD230 = 3 kits; FD235, FD240, and FD241 = 4 kits; FD245 and FD250 = 5 kits. Kits are available through Whole Goods only.

285. Quantities of Lifter Storage Rack kits required varies depending on header size. FD225 = 1 kit; FD230, FD235, FD240, FD241, FD245, and FD250 = 2 kits. Kits are available through Whole Goods only.

119 (Option) Divider Storage Bracket

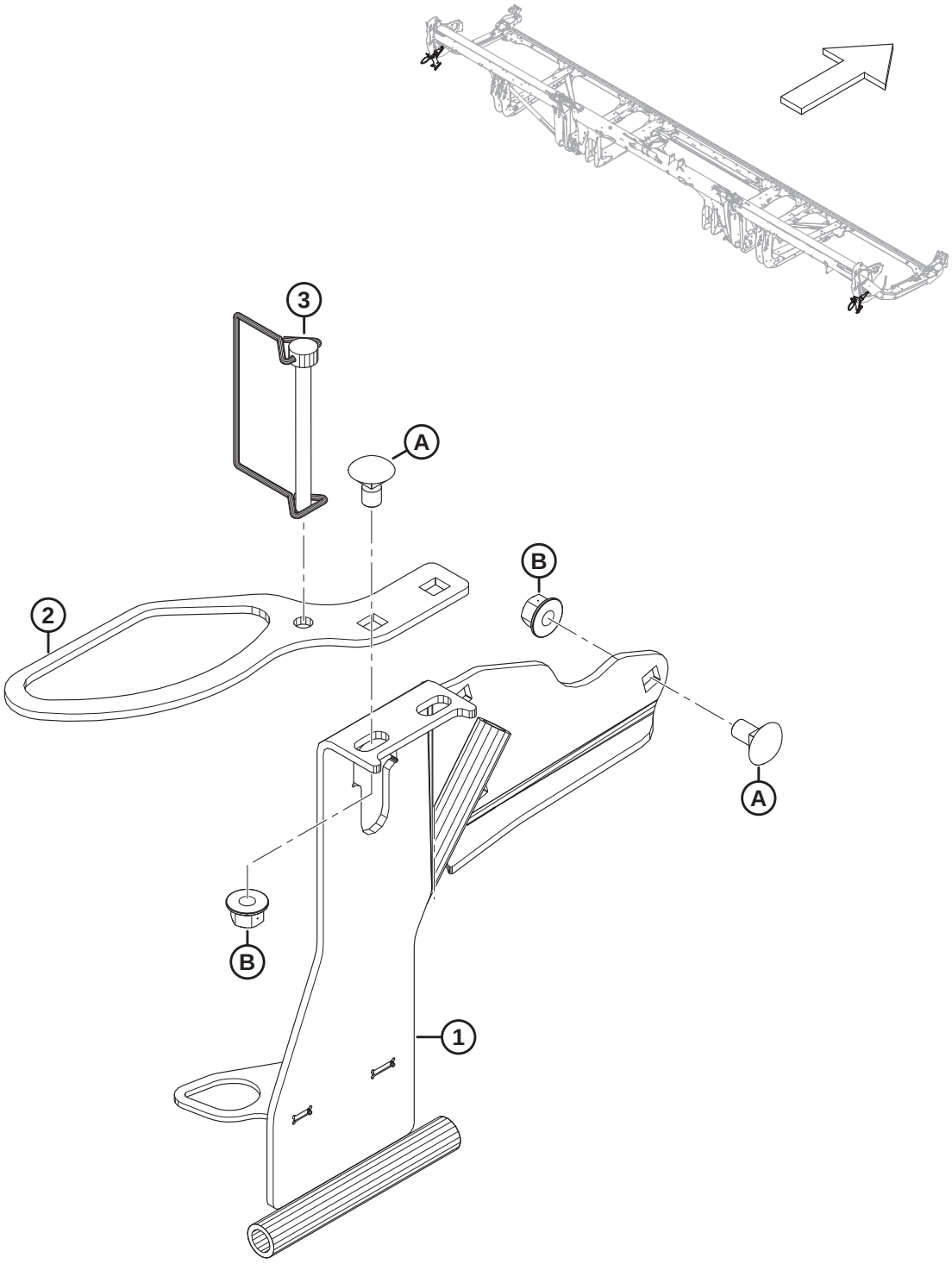

1032910

(OPTION) DIVIDER STORAGE BRACKET

Ref	Part Number	Description	Qty	Serial Number
	B7030	KIT – DIVIDER STORAGE BRACKET [286]		
1	313566	LH DIVIDER STORAGE – WELDT	1	
	313705	RH DIVIDER STORAGE – WELDT	1	
2	311464	SUPPORT – STORAGE RICE RODS	2	
3	136749	PIN – LYNCH	2	
A	136178	BOLT – RHSN M10 X 1.5 X 20-8.8-AA1J		
B	135799	NUT – HEX FLG CTR LOC M10 X 1.5-10		

286. Kit are available through Whole Goods only.

120 (Option) EasyMove™ – Slow Speed Transport, Base Kit and Stabilizer Wheels

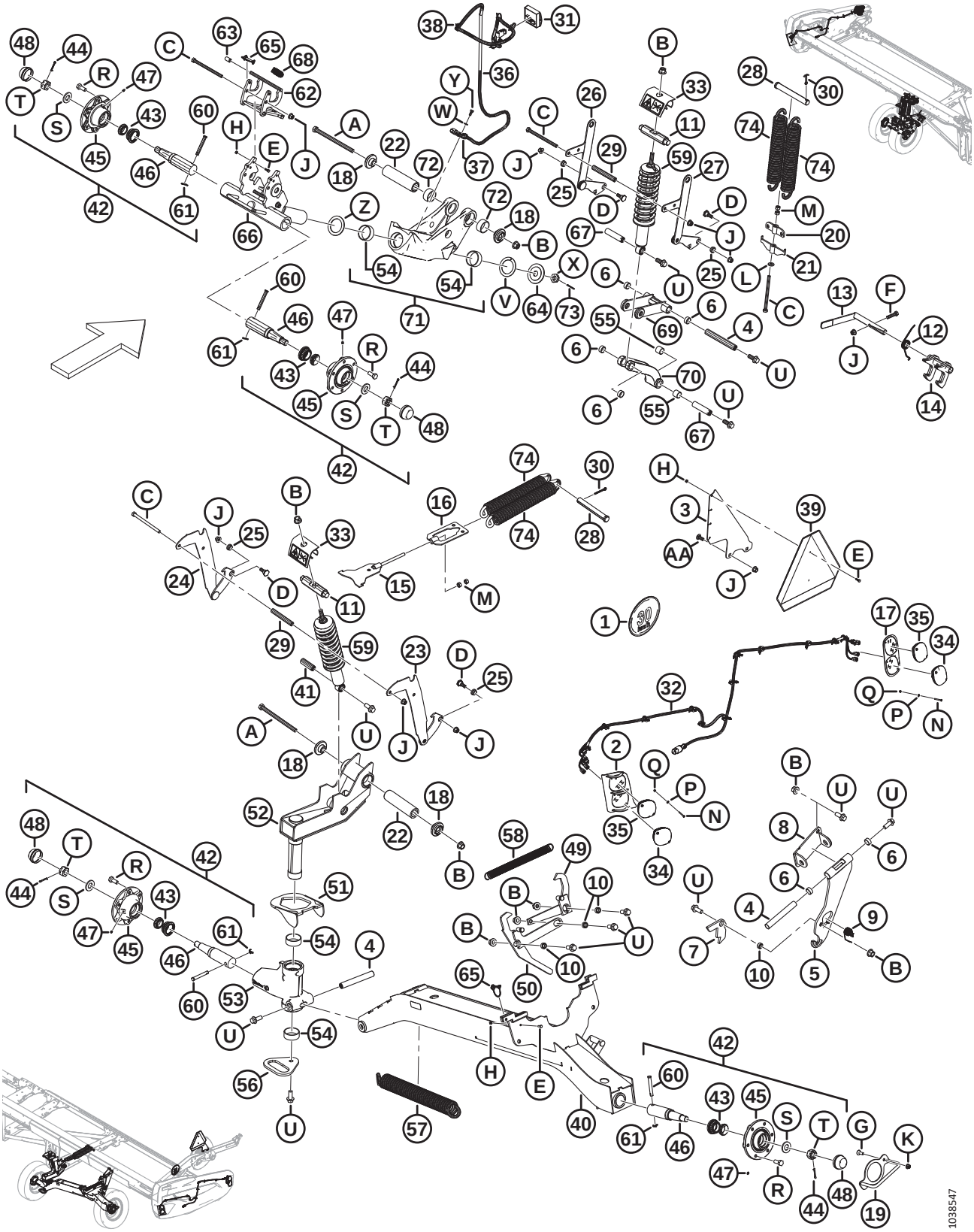

(OPTION) EASYMOVE™ – SLOW SPEED TRANSPORT, BASE KIT AND STABILIZER WHEELS

Ref	Part Number	Description	Qty	Serial Number
	B6288	EASYMOVE™ SLOW SPEED TRANSPORT – STABILIZER WHEELS AND BASE KIT [287]		
1	327561	KIT – DECALS, SIS BRACKET	1	
	193243	DECAL – SIS 30 KM/H, SMALL	1	
	193241	DECAL – SIS, 30 KM/H	1	
	193240	DECAL – SIS 20 MILE/H, SMALL	1	
	193242	DECAL – SIS 20 MILE/H	1	
2	327429	LIGHT BEZEL – WELDT, LH [288]	1	
	327179	LIGHT BEZEL – WELDT, RH [288]	1	
3	327428	LUG	1	
4	316794	PIN	3	
5	316358	SUPPORT – ASSY [289]	1	
6	210690	BUSHING – COMPOSITE	6	
7	303961	PLATE – LATCH	1	
8	327704	PIVOT – WELDT	1	
9	303379	SPRING – TORSION	1	
10	252958	SPACER	4	
11	316284	PIN	2	
12	316119	SPRING – TORSION	1	
13	316118	HANDLE – ASSY	1	
	287701	GRIP – HANDLE	1	
14	316110	LATCH – WELDT	1	
15	316096	SUPPORT – WELDT	1	
16	316095	SUPPORT – WELDT	1	
17	313406	BEZEL – LH FRONT [288]	1	
	313425	BEZEL – RH FRONT [288]	1	
18	303839	CASTING – PLATE	4	
19	303766	HANDLE – WELDT	1	
20	303693	SPRING TENSION SUPPORT – WELDT	1	
21	303691	SPRING ADJUST SUPPORT – WELDT	1	
22	303525	PIN – PIVOT	2	
23	327756	SUPPORT, HEIGHT ADJUST – WELDT, RH	1	
24	327755	SUPPORT, HEIGHT ADJUST – WELDT, LH	1	
25	303492	BUSHING – COMPOSITE	4	
26	303491	SUPPORT, HEIGHT ADJUST – WELDT	1	
27	303486	SUPPORT, HEIGHT ADJUST – WELDT	1	
28	292692	PIN – CLEVIS	2	
29	210985	SPACER	2	
30	18609	PIN – COTTER 1/4 DIA X 2 ZP	2	
31	327255	MODULE – TRANSPORT LED W/ TAPE	1	
32	323049	HARNESS – TRANSPORT EXT LTS	2	

287. Kits are available through Whole Goods only.
288. The bezels are mounted onto the header endshields with hardware N, P, and Q.
289. The support assembly includes support (NSS) and two composite bushings (MD #210690).

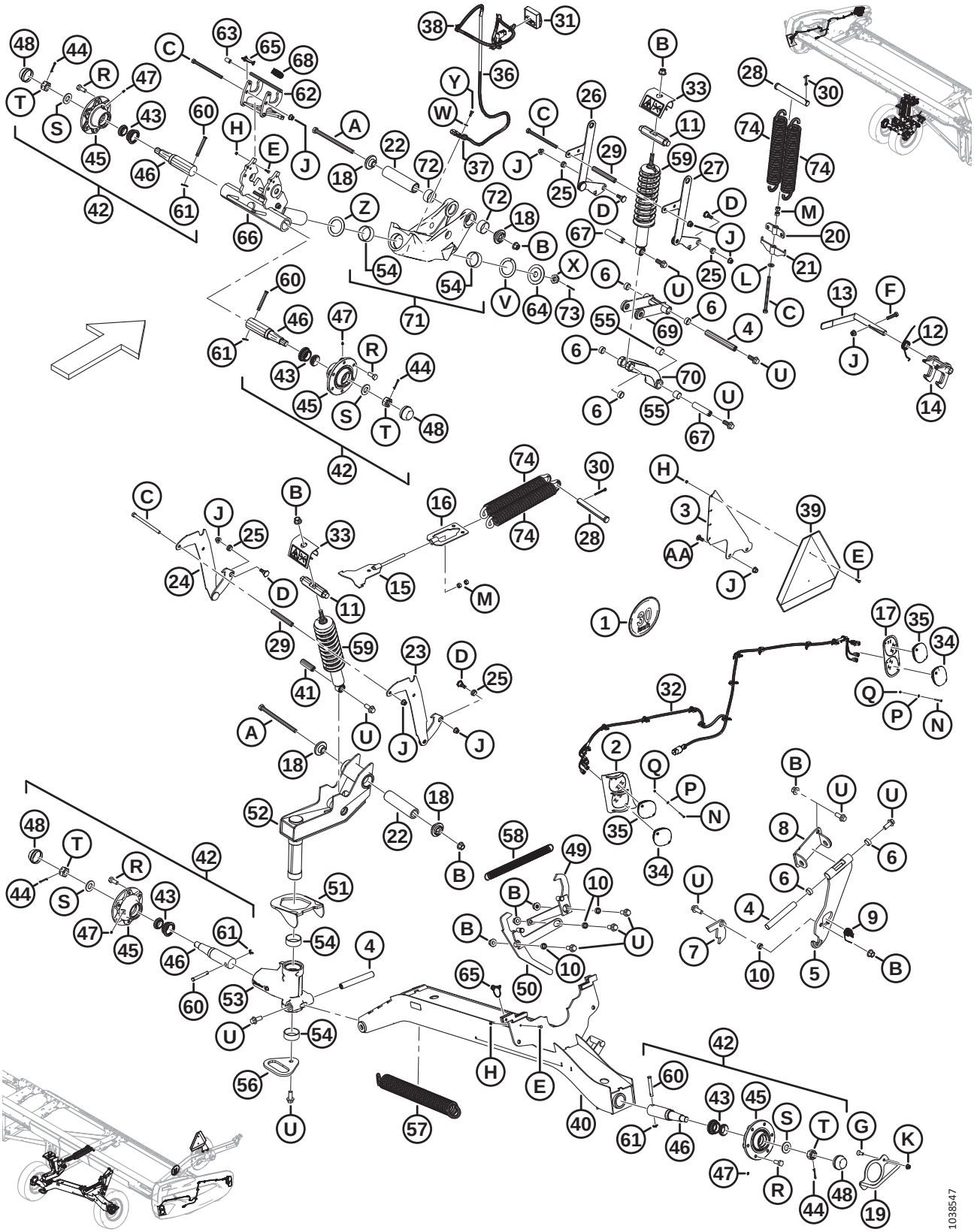
1038547

Ref	Part Number	Description	Qty	Serial Number
33	327089	ANTI PRY – ASSY	2	
34	316044	LIGHT – RED	2	
35	284215	LIGHT – AMBER	4	
36	284548	HARNESS – TRANSPORT EXT LEG	1	
37	135716	CLAMP – INSULATED 5/8 IN.	1	
38	21763	FASTENER – CABLE TIE BLACK	7	
39	21032	SMV SIGN – METAL AND REFLECTOR	1	
40	327786	SUPPORT, AXLE – WELDT	1	
41	316793	PIN	1	
42	316330	HUB – ASSY [290]	4	
43	316851	KIT – WHEEL BEARING [291]	4	
44	18608	PIN – COTTER 3/16 DIA X 1.5 ZP	4	
45	316847	HUB	4	
46	316848	SPINDLE	4	
47	18671	FITTING – LUBE 1/4 - 28 UNF	4	
48	30520	CAP – DUST	4	
49	327751	ARM – WELDT	1	
50	327749	LEVER – WELDT	1	
51	303832	HOOK – WELDT	1	
52	327672	PIVOT – ASSY	1	
53	303380	SUPPORT, PIVOT – ASSY	1	
54	210661	BUSHING – COMPOSITE	4	
55	133992	BUSHING – COMPOSITE	6	
56	303033	PLATE – HANDLE	1	
57	303021	SPRING – EXTENSION	1	
58	247222	SPRING – EXTENSION	1	
59	210340	DAMPENER – HEADER	2	
60	101007	PIN – CLEVIS	4	
61	18648	PIN – COTTER 3/16 DIA X 1.25 ZP	4	
62	327535	LATCH – ASSY [292]	1	
63	327534	GRIP – HANDLE	1	
64	327745	DISC	1	
65	320205	PIN – LYNCH DIA 5/16 IN. X 1.75 IN. LG W/ TETHER	2	
66	327716	SPINDLE – WELDT	1	
67	316293	PIN	2	
68	303898	SPRING – EXTENSION	1	
69	327738	ARM SUPPORT – ASSY [293]	1	

290. The hub assembly includes cotter pin (MD #18608), lube fitting (MD #18671), six wheel bolts (MD #18916), dust cap (MD #30520), hub (MD #316847), spindle (MD #316848), wheel bearing kit (MD #316851), slotted nut (MD #316859), and washer (MD #316860).
291. The kit includes bearings (NSS) and seal (NSS).
292. The latch assembly includes latch (NSS) and handle grip (MD #327534).
293. The arm support assembly includes arm support (NSS) and two composite bushings (MD #210690).

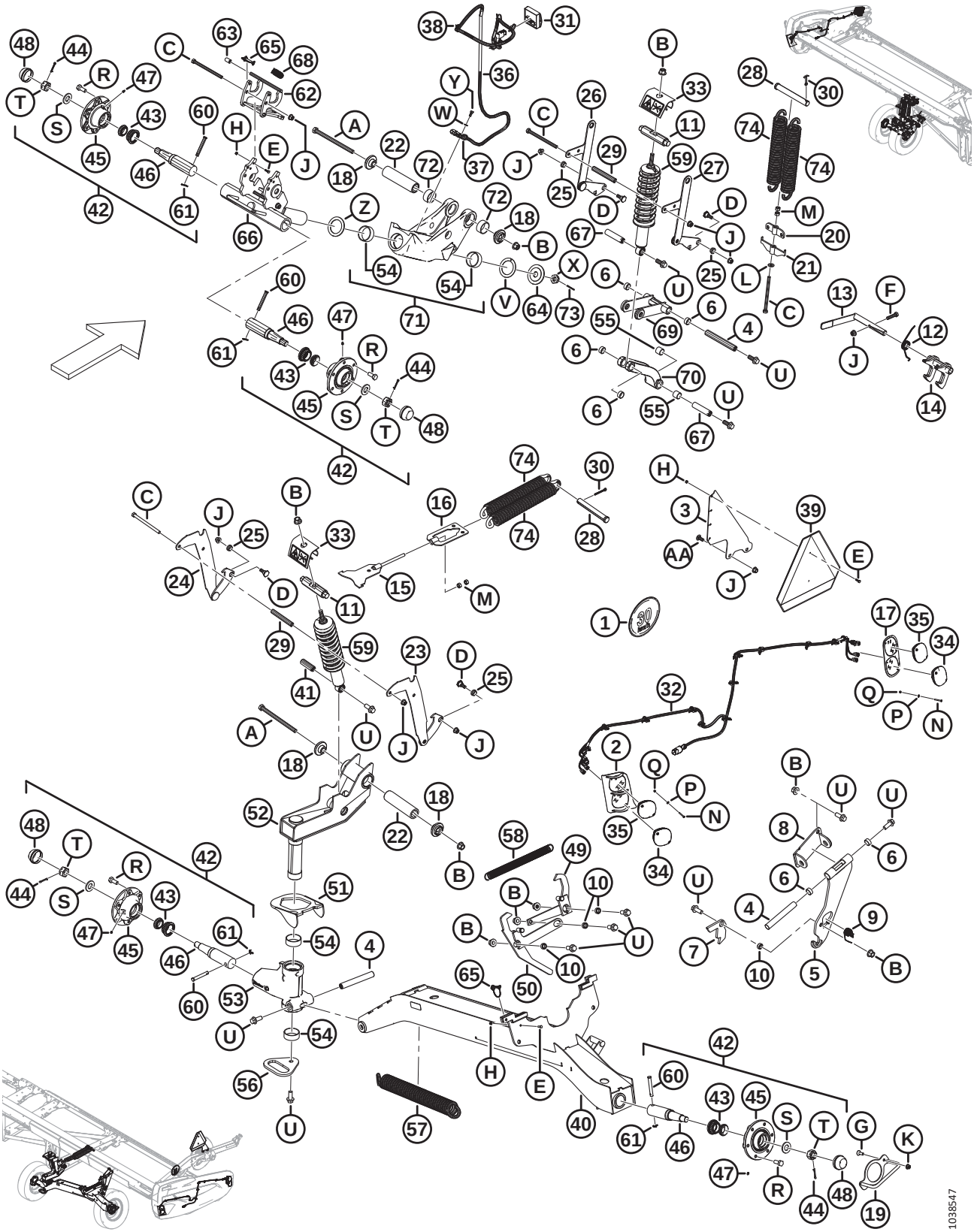
1038547

Ref	Part Number	Description	Qty	Serial Number
70	303341	CAST SUPPORT – ASSY [294]	1	
71	303283	PIVOT – ASSY [295]	2	
72	327600	BUSHING – COMPOSITE	4	
73	18607	PIN – COTTER 5/32 DIA X 1.5 ZP	1	
74	144724	SPRING – EXTENSION	4	
	316649	DECAL – HEIGHT SETTING, LH	1	
	316639	DECAL – HEIGHT SETTING, RH	1	
	327086	DECAL – ENERGY RELEASE	2	
	165524	REFLECTOR – RED	2	
A	320011	BOLT – HEX HD M16 X 2 X 240-10.9-ZINC		
B	136440	NUT – HEX FLG CTR LK M16 X 2-10-AA1J		
C	252272	BOLT – HEX HD TFL M12 X 1.75 X 180-10.9-ZINC		
D	303251	BOLT – 19 MM SHLDR M12 SPCL		
E	184646	BOLT – HEX HD TFL M6 X 1 X 20-8.8-AA1J		
F	152779	BOLT – HEX HD M12 X 1.75 X 55-8.8-AA1J		
G	136857	SCREW – HEX SOC CSK HD TFL M10 X 1.5 X 30-ZINC		
H	136773	NUT – HEX CTR LOC M6 X 1-8-AA1J		
J	136431	NUT – HEX FLG CTR LOC M12 X 1.75-10		
K	135799	NUT – HEX FLG CTR LOC M10 X 1.5-10		
L	135369	WASHER – HARDENED ASTM F436 1/2		
M	135156	NUT – HEX M12 X 1.75-10-AA1J		
N	320154	SCREW – PAN HD DIN 7985 M4 X 0.7 X 35-4.8-ZINC BLACK		
P	18798	WASHER – FLAT SAE 7/32 ID X 7/16 IN OD AA1J		
Q	197320	NUT – HEX NYLOC M4 X 0.7-8-AA1J		
R	18916	BOLT – 90° WHEEL 9/16 NF X 1.75 OL - AA1J		
S	316860	WASHER		
T	316859	NUT – SLOTTED		
U	320060	BOLT – HEX FLG HD TFL M16 X 2 X 40-10.9-ZINC		
V	210918	WASHER – THRUST		
W	184708	WASHER – FLAT M8-200HV-AA1J		
X	136446	NUT – HEX SLTD FINE M24 X 1.5-SPCL-22HA-ZINC		
Y	30715	BOLT – HEX HD TFL M8 X 1.25 X 20-8.8-AA1J		
Z	327710	WASHER – THRUST		
AA	152702	BOLT – RHSN M12 X 1.75 X 30-8.8-AA1J		

294. The support assembly includes support (NSS), two composite bushings (MD #133992), and two composite bushings (MD #210690).
295. The pivot assembly includes pivot (NSS), two composite bushings (MD #210661), and two composite bushings (MD #327600).

121 (Option) EasyMove™ – Slow Speed Transport, Wheels, Tires, and Tow Poles

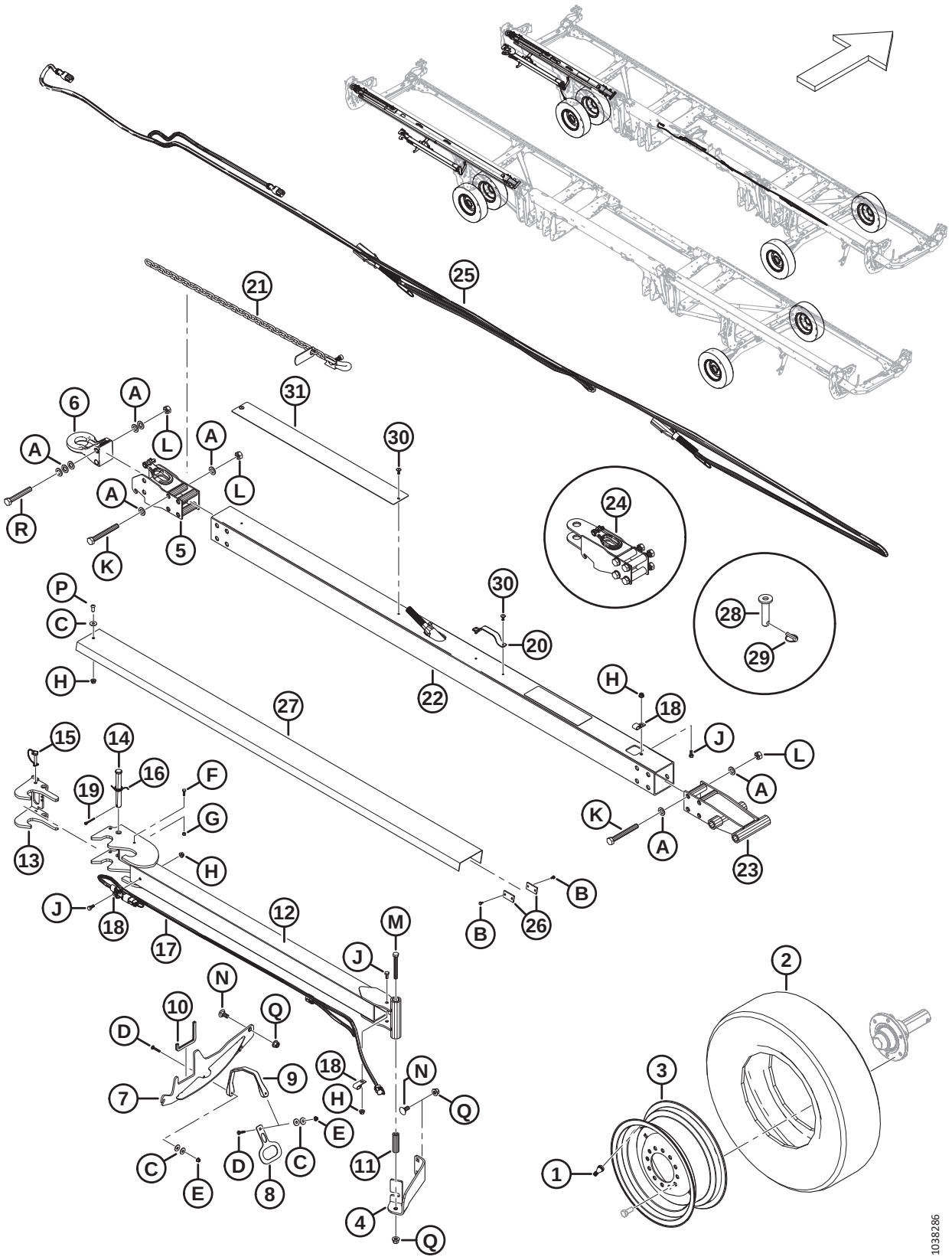

(OPTION) EASYMOVE™ – SLOW SPEED TRANSPORT, WHEELS, TIRES, AND TOW POLES

Ref	Part Number	Description	Qty	Serial Number
	B6275	EASYMOVE™ SLOW SPEED TRANSPORT – WHEELS AND TIRES [296]		
1	230968	STEM – TIRE VALVE ASSY #TR-416	2	
2	230483	TIRE – ST 225/75 R15 LRE	2	
3	144531	WHEEL – 15 X 6 LB	2	
	327717	DECAL – TIRE PRESSURE	2	
	B7392	EASYMOVE SLOW SPEED TRANSPORT – LONG TOW POLE [297]		
	B7391	EASYMOVE SLOW SPEED TRANSPORT – SHORT TOW POLE [297]		
4	327649	ANGLE – SUPPORT	1	
5	327694	HITCH – BASE	1	
6	113566	HITCH – PINTLE	1	
7	327771	WELDMENT – SUPPORT	1	
8	327304	PLATE – HANDLE	1	
9	193187	STRAP – RUBBER	1	
10	141220	SEAL – EDGE TRIM	1	
11	327294	TUBE	1	
12	327740	HITCH, EXTENSION – WELDT	1	
13	327739	LATCH – WELDT	1	
14	320213	PIN – CLEVIS	1	
15	320205	PIN – LYNCH DIA 5/16 IN. X 1.75 IN. LG W/ TETHER	1	
16	303169	SPRING – TORSION	1	
17	284549	HARNESS – TRANSPORT EXT HITCH	1	
18	39272	CLIP – INSULATED	3	
19	18608	PIN – COTTER 3/16 DIA X 1.5 ZP	1	
20	327563	HANDLE [298]	A/R	
21	327532	CHAIN – SAFETY	1	
22	327696	TUBE – HITCH, LONG	1	
	327695	TUBE – HITCH, SHORT	1	
23	327692	HITCH, END – WELDT	1	
24	327664	ASSY – CLEVIS HITCH	1	
25	284550	HARNESS – TRANSPORT LIGHTS	1	
26	316904	PLATE [299]	2	
27	327680	SUPPORT – CHANNEL [298]	A/R	
28	118239	PIN – HITCH	1	
29	113561	PIN – LYNCH	1	
30	320039	RIVET – POP 4.8 MM X 27.2 MM [300]	A/R	
31	327659	PLATE – WEAR	1	

296. Kits are available through Whole Goods only.
297. The Short Tow-Bar kit is used for FD230 and FD235, Long Tow-Bar kit is used for FD240, FD241, FD245, and FD250. Kits are available through Whole Goods only.
298. Quantities: long tow pole (MD #B7392) = 2, short tow pole (MD #B7391) = 1.
299. Long tow pole (MD #B7392) only.
300. Quantities: long tow pole (MD #B7392) = 6, short tow pole (MD #B7391) = 4.

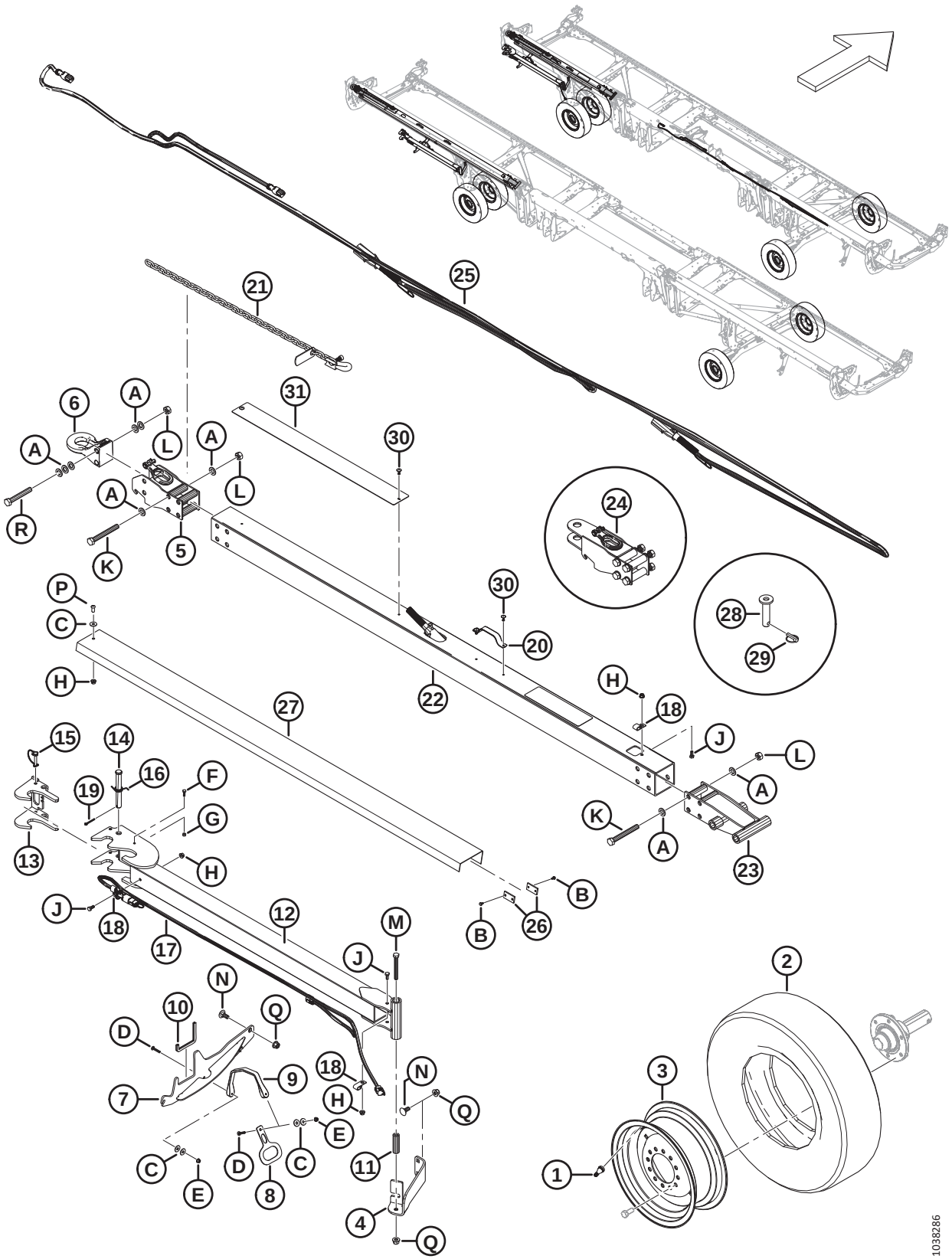
1038286

Ref	Part Number	Description	Qty	Serial Number
	327588	DECAL – HITCH DAMAGE HAZARD	1	
A	184717	WASHER – FLAT REG M16-200HV-AA1J		
B	42292	SCREW – TPG HEX WSH HD #10 X 1/2-GR5-AA1T		
C	184709	WASHER – FLAT LARGE M8-200HV		
D	184643	BOLT – RHSSN M6 X 1.0 X 35-8.8-AA1J		
E	152668	NUT – HEX FLG CTR LOC M6 X 1-8		
F	184646	BOLT – HEX HD TFL M6 X 1 X 20-8.8-AA1J		
G	136773	NUT – HEX CTR LOC M6 X 1-8-AA1J		
H	135337	NUT – HEX FLG CTR LK M8 X 1.25-8-AA1J		
J	30715	BOLT – HEX HD TFL M8 X 1.25 X 20-8.8-AA1J		
K	320219	BOLT – HEX HD M16 X 2 X 130-12.9-ZINC		
L	320208	NUT – HEX TOP LOCK M16 X 2-12-ZINC		
M	184672	BOLT – HEX HD M12 X 1.75 X 100-10.9-AA1J		
N	184667	BOLT – RHSN M12 X 1.75 X 30-8.8-ZINC		
P	320176	SCREW – HEX SOC BTN HD M8 X 1.25 X 20-10.9-AA1J		
Q	136431	NUT – HEX FLG CTR LOC M12 X 1.75-10		
R	184679	BOLT – HEX HD M16 X 2 X 110-10.9-AA1J		

122 (Option) Endshield Conversion Kits

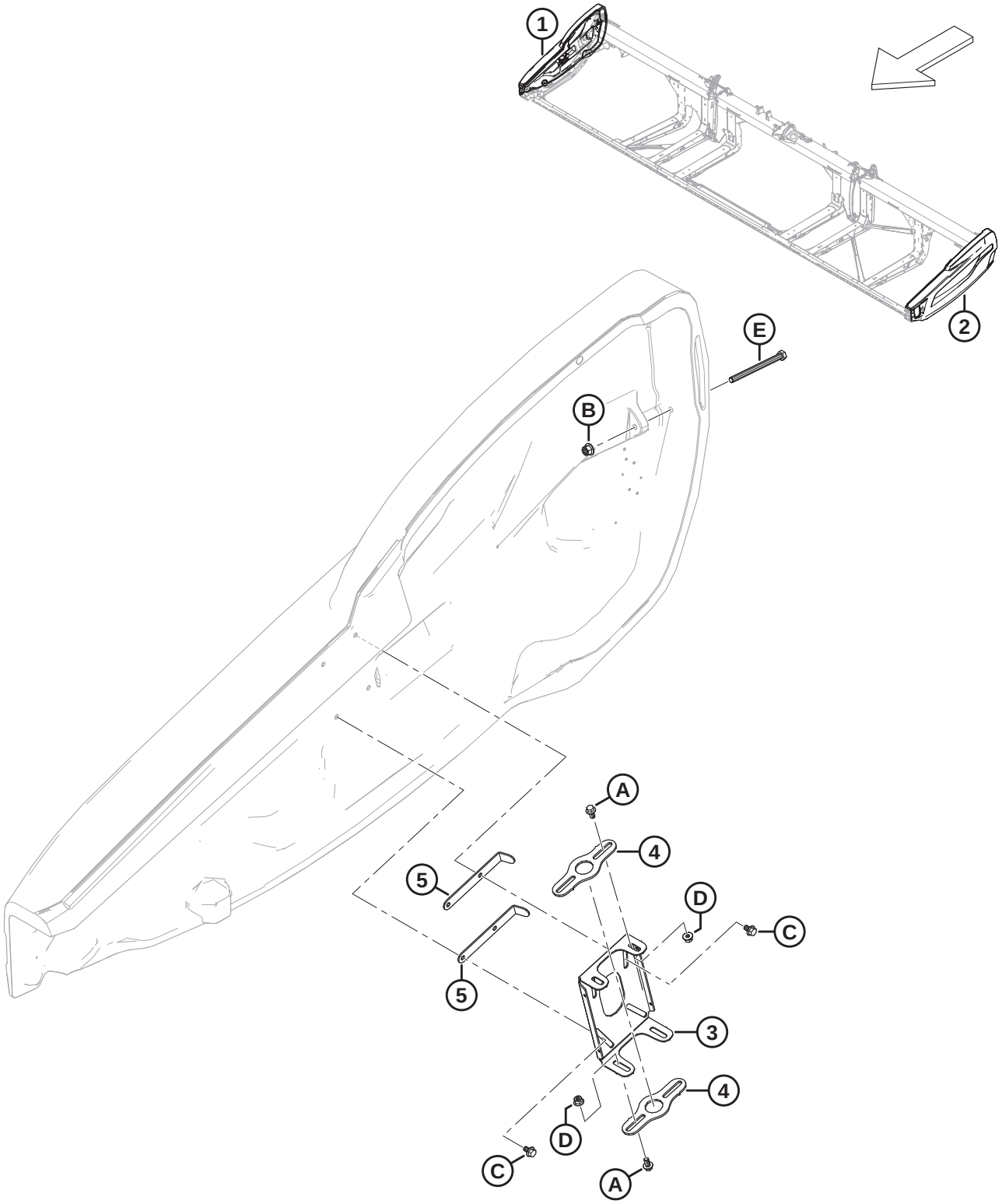

1039667

NOTE:

The endshields in these conversion kits are shipped with common decals only. To order individual product identification decals, refer to the sections specified in the footnotes for each endshield. To order reflectors for the right endshields, refer to Section *106 Decals and Reflectors – FD2 Series, page 245*.

Ref	Part Number	Description	Qty	Serial Number
	B7401	**KIT – BLACK ENDSHIELD CONV** [301]		
	B7402	**KIT – RED ENDSHIELD CONV** [301]		
	B7403	**KIT – YELLOW ENDSHIELD CONV** [301]		
1	**360555**	**SHIELD ASSY – BLACK, RH** [302]	**1**	
	360448	**SHIELD ASSY – CIH AG RED, RH** [303]	**1**	
	360449	**SHIELD ASSY – NH YELLOW, RH** [304]	**1**	
2	**360554**	**SHIELD ASSY – BLACK, LH** [302]	**1**	
	360552	**SHIELD ASSY – CIH AG RED, LH** [303]	**1**	
	360553	**SHIELD ASSY – NH YELLOW, LH** [304]	**1**	
3	**313432**	**PIVOT – SHIELD RH**	**1**	
	313303	**PIVOT – SHIELD LH**	**1**	
4	**313304**	**PIVOT**	**4**	
5	**313783**	**RETAINER**	**4**	
A	**152655**	**BOLT – HEX FLG HD M10 X 1.5 X 20-8.8-AA1J**		
B	**136431**	**NUT – HEX FLG CTR LOC M12 X 1.75-10**		
C	**136231**	**BOLT – HEX SER FLG HD M10 X 1.5 X 16 X SPCL-8.8**		
D	**135799**	**NUT – HEX FLG CTR LOC M10 X 1.5-10**		
E	**135696**	**BOLT – HEX HD M12 X 1.75 X 150-8.8-AA1J**		

301. Kits are available through Whole Goods only.
302. Refer to Section *107 Decals – Product Identification, page 247* for MacDon product identification decals.
303. Refer to Section *108 Decals – Product Identification, Case, page 249* for Case product identification decals.
304. Refer to Section *109 Decals – Product Identification, New Holland, page 251* for New Holland product identification decals.

123 (Option) Floating Crop Dividers

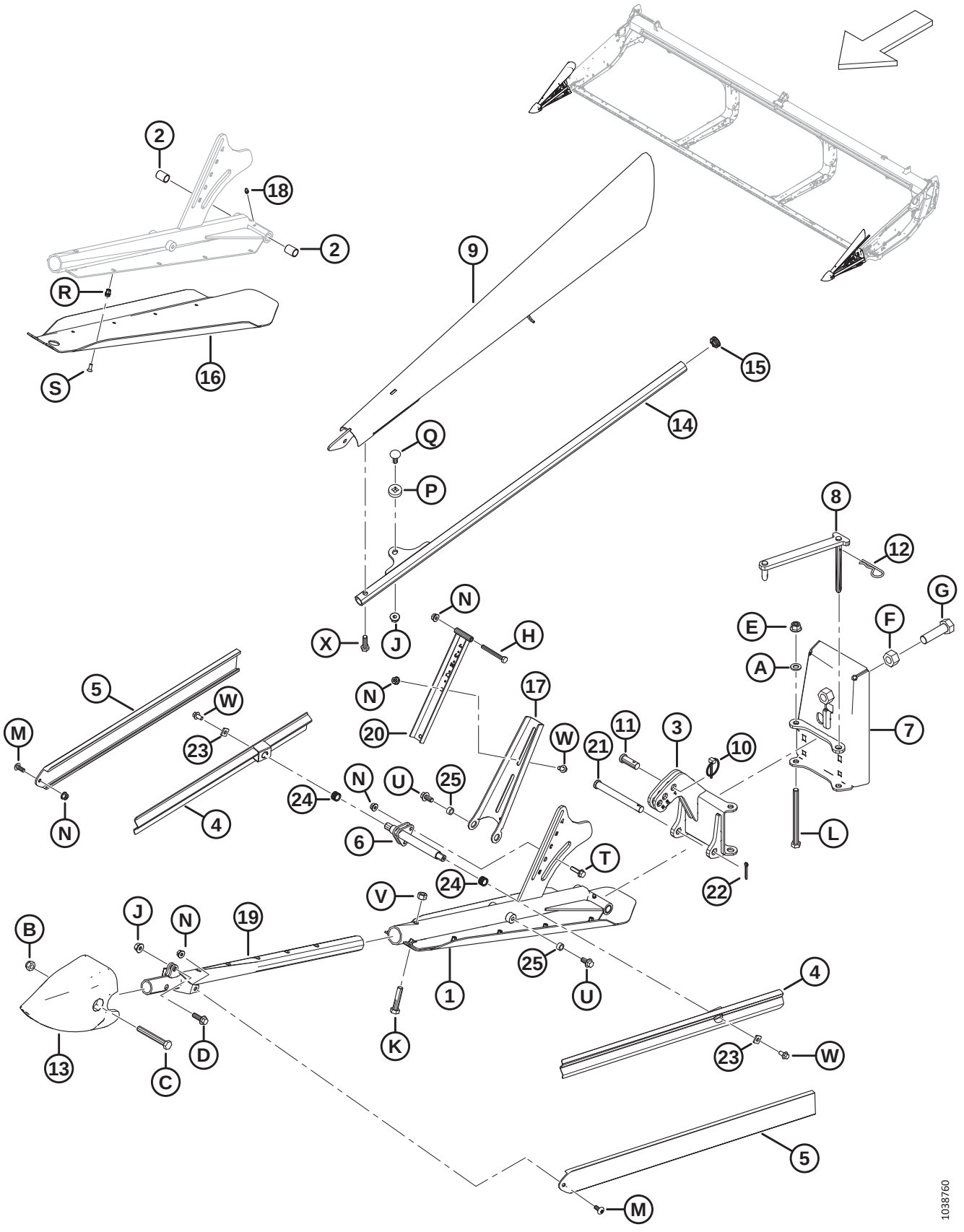

(OPTION) FLOATING CROP DIVIDERS

Ref	Part Number	Description	Qty	Serial Number
	B7346	KIT – FLOATING END DIVIDERS [305]		
1	360072	ASSY – LH SHOE SUPPORT [306]	1	
	360114	ASSY – RH SHOE SUPPORT [307]	1	
2	258391	BUSHING	4	
3	360079	HINGE WELDT – LH	1	
	360119	HINGE WELDT – RH	1	
4	360077	RAIL - DEFLECTOR WELDT	4	
5	360122	DEFLECTOR – EXTRUDED	4	
6	360106	WELDT – SIDE SUPPORT	2	
7	360069	REAR PLATE WELDT – LH	1	
	360134	REAR PLATE WELDT – RH	1	
8	360004	LINK WELDT – LH	1	
	360168	LINK WELDT – RH	1	
9	360095	DEFLECTOR WELDT – LH	1	
	360081	DEFLECTOR WELDT – RH	1	
10	102264	PIN – LYNCH 3/16 X 1 9/16 IN.	2	
11	18619	PIN – CLEVIS	2	
12	13125	PIN – HAIR	2	
13	313461	CONE – DIVIDER	2	
14	360103	TUBE – WELDMENT	2	
15	335301	PLUG – PLASTIC, SNAP-IN	2	
16	340212	SHOE – LH	1	
	340210	SHOE – RH	1	
17	360110	SUPPORT – LH TOP DEFLECTOR	1	
	360120	SUPPORT – RH TOP DEFLECTOR	1	
18	18671	FTITTING - LUBE 1/4-28 UNF	2	
19	360076	SUPPORT WELDT – FRONT	2	
20	360108	DEFLECTOR SUPPORT	2	
21	49378	PIN – CLEVIS	2	
22	18648	PIN – COTTER3/16 DIA X 1.25 ZP	2	
23	233841	SUPPORT - DEFLECTOR	4	
24	26429	SPRING – COMPRESSION	4	
25	19542	SPACER	4	
A	184714	WASHER – FLAT REG M12-300HV		
B	184695	NUT – HEX NYLOC M12 X 1.75-8-AA1J		
C	184673	BOLT – HEX HD M12 X 1.75 X 90-10.9-AA1J		
D	184665	BOLT – HEX FLG HD M10 X 1.5 X 30-10.9-AA1J		
E	136431	NUT – HEX FLG CTR LOC M12 X 1.75-10		
F	136342	NUT – HEX FINE M20 X 1.5 X 10-AA3L		

305. Kits are available through Whole Goods only.
306. The assembly includes LH support weldment (NSS), LH shoe (MD #340212), grease fitting (MD #18671), two bushings (MD #258391), ten screws (MD #320220), and ten rivnuts (MD #320404).
307. The assembly includes RH support weldment (NSS), RH shoe (MD #340210), grease fitting (MD #18671), two bushings (MD #258391), ten screws (MD #320220), and ten rivnuts (MD #320404).

(OPTION) FLOATING CROP DIVIDERS

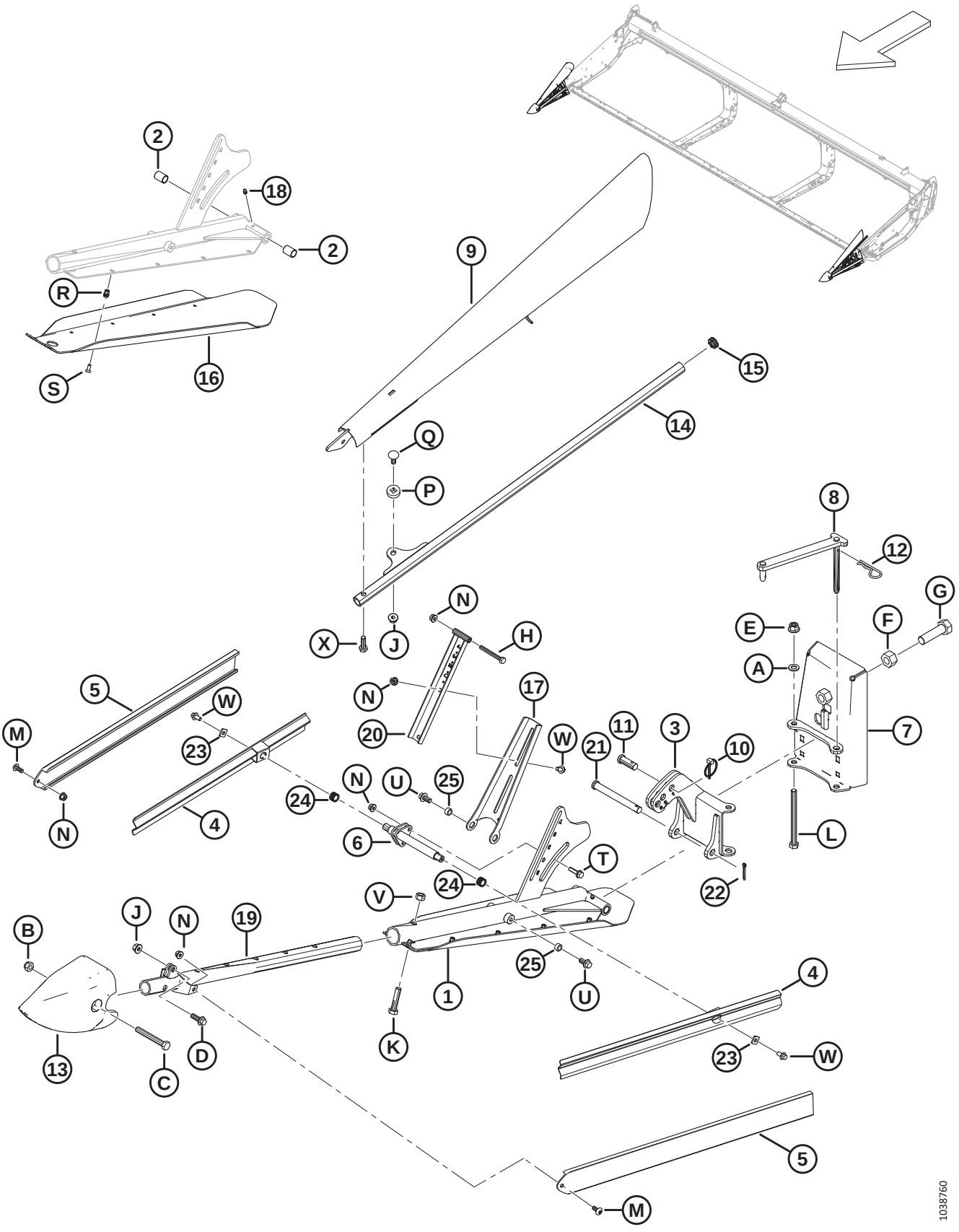

(OPTION) FLOATING CROP DIVIDERS

Ref	Part Number	Description	Qty	Serial Number
G	136339	BOLT – HEX HD FINE TFL M20 X 1.5 X 70 X 8.8-ZINC		
H	184656	BOLT – HEX HD M8 X 1.25 X 70-8.8-AA1J		
J	135799	NUT – HEX FLG CTR LOC M10 X 1.5-10		
K	152779	BOLT – HEX HD M12 X 1.75 X 55-8.8-AA1J		
L	135696	BOLT – HEX HD M12 X 1.75 X 150-8.8-AA1J		
M	320190	SCREW – TORX TRUSS HD M8 X 1.25 X 20-SPCL-8.8-ZINC		
N	135337	NUT – HEX FLG CTR LK M8 X 1.25-8-AA1J		
P	360105	WASHER – SPECIAL		
Q	184662	BOLT – RHSN TFL M10 X 1.5 X 30-8.8-AA1J		
R	320404	RIVNUT – M6 X 1.0 HEX 1.0-3.5		
S	320220	SCREW – TORX CSK HD TFL M6 X 1 X 16-SPCL-8.8-ZINC		
T	252655	BOLT-HEX FLG HD TFL M8 X 1.25 X 30-8.8-AA1J		
U	152655	BOLT – HEX FLG HD M10 X 1.5 X 20-8.8-AA1J		
V	136759	NUT – HEX CTR LOC M12 X 1.75-8-AA1J		
W	136485	BOLT – HEX FLG HD TFL M8 X 1.25 X 16-8.8-AA1J		
X	135319	BOLT – HEX HD M10 X 1.5 X 40-8.8-AA1J		

124 (Option) Four-Point Guard Kits, Single Knife

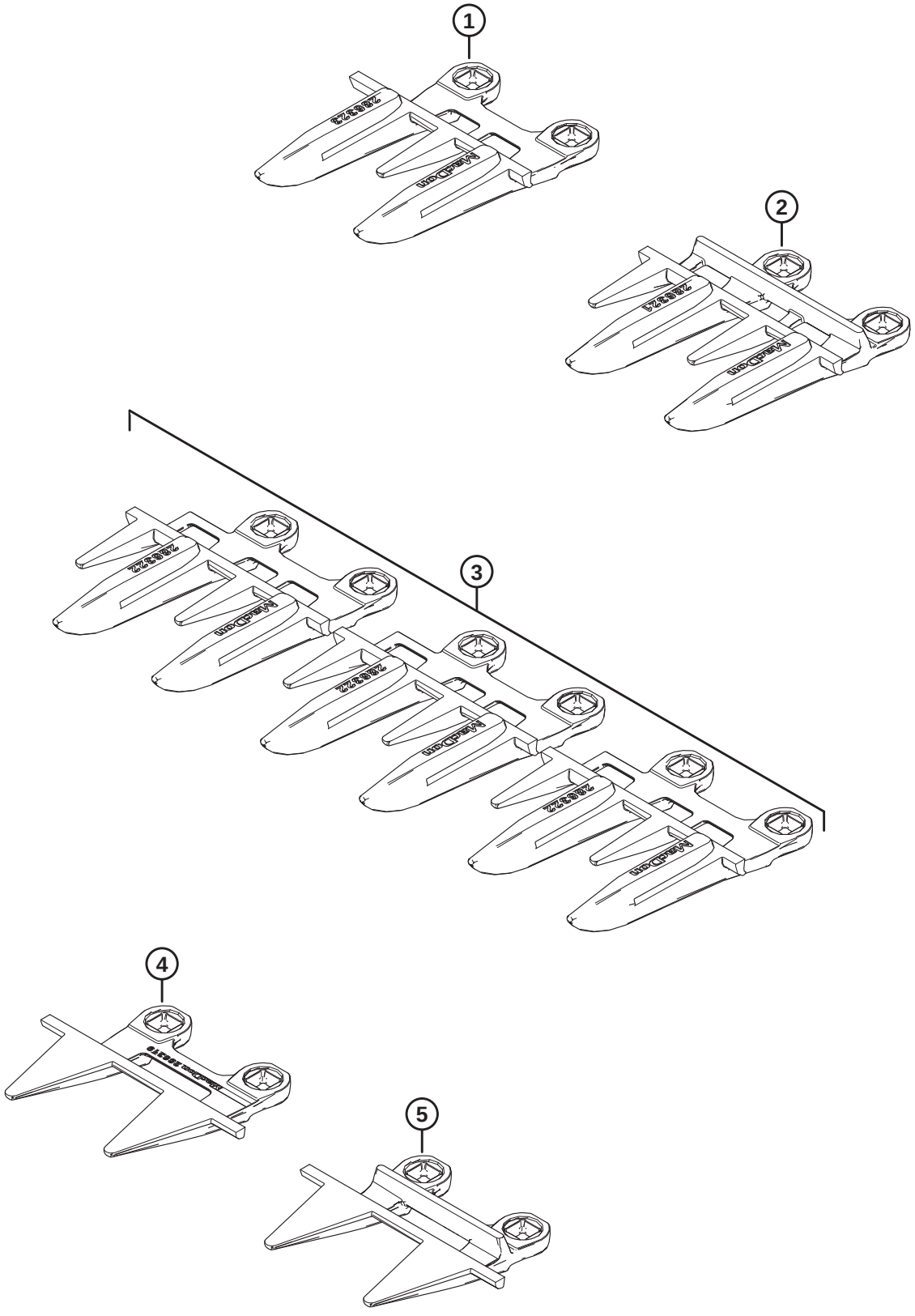

1039619

(OPTION) FOUR-POINT GUARD KITS, SINGLE KNIFE

Ref	Part Number	Description	Qty	Serial Number
	286690	**KIT – 4 POINT GUARDS 25 FT SK**		
	286691	**KIT – 4 POINT GUARDS 30 FT SK**		
	286692	**KIT – 4 POINT GUARDS 35 FT SK**		
	286693	**KIT – 4 POINT GUARDS 40 FT SK**		
1	**286323**	**KNIFE GUARD – 4-POINT SPECIAL** [308]	**1**	
2	**286321**	**KNIFE GUARD – 4-POINT** [309]		
3	**286322**	**KNIFE GUARD – 4-POINT END** [310]	**3**	
4	**286319**	**KNIFE GUARD – PLUGFREE END** [310]	**1**	
5	**286318**	**KNIFE GUARD – PLUGFREE** [308]	**1**	

308. Used at the right end of the header.
309. Quantities: FD225 = 44, FD230 = 54, FD235 = 64, FD240 = 74.
310. Used at the drive end of the header.

125 (Option) Four-Point Guard Kits, Double Knife

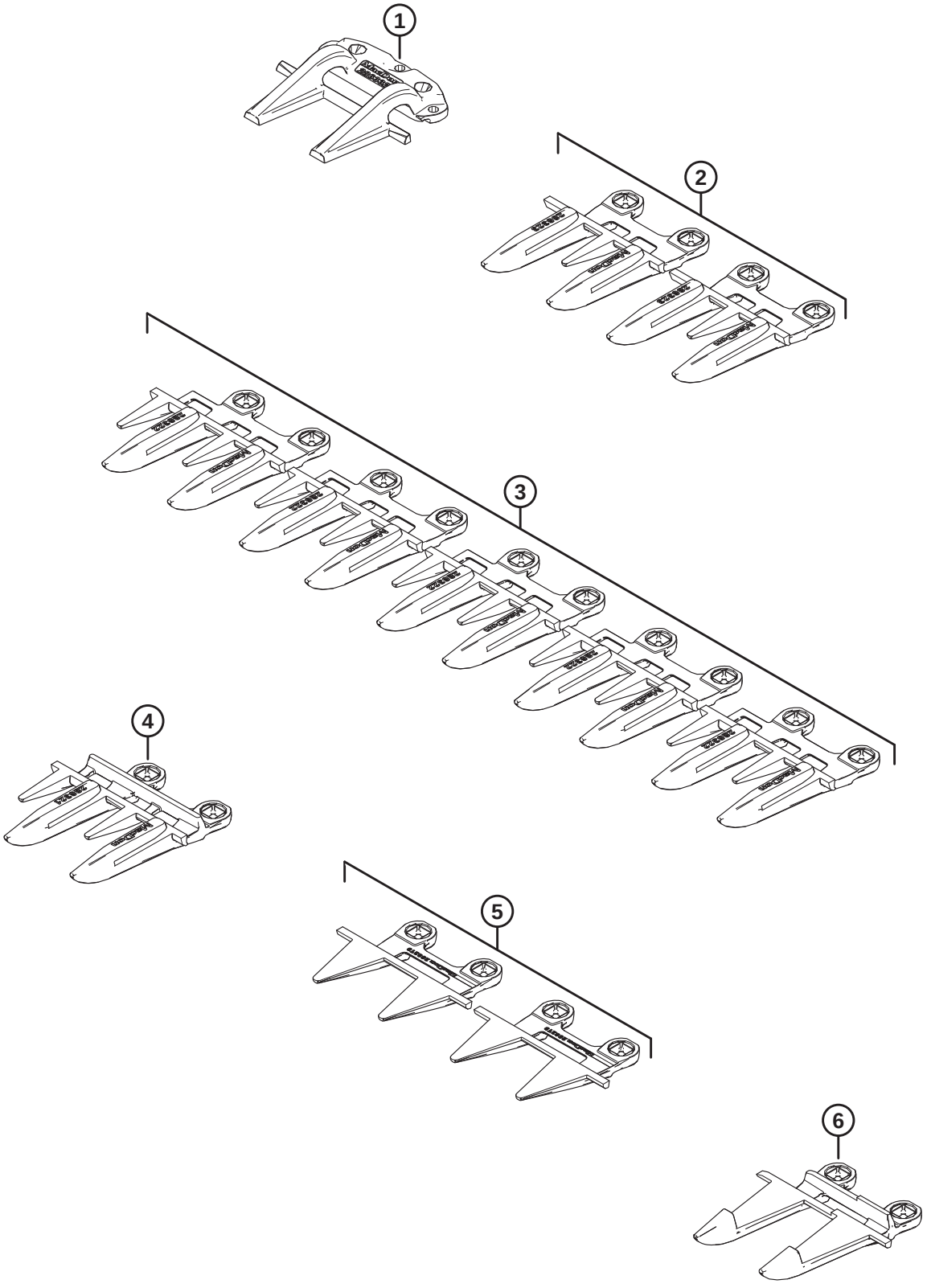

1039618

(OPTION) FOUR-POINT GUARD KITS, DOUBLE KNIFE

Ref	Part Number	Description	Qty	Serial Number
	286683	**KIT – 4 POINT GUARDS 25 FT DK**		
	286684	**KIT – 4 POINT GUARDS 30 FT DK**		
	286685	**KIT – 4 POINT GUARDS 35 FT DK**		
	286686	**KIT – 4 POINT GUARDS 40 FT DK**		
	286687	**KIT – 4 POINT GUARDS 41 FT DK**		
	286688	**KIT – 4 POINT GUARDS 45 FT DK**		
	286689	**KIT – 4 POINT GUARDS 50 FT DK**		
1	**286332**	**HOLD-DOWN – POINTED CENTER** [311]	**1**	
2	**286323**	**KNIFE GUARD – 4-POINT SPECIAL** [312]	**2**	
3	**286322**	**KNIFE GUARD – 4-POINT END** [313]	**5**	
4	**286321**	**KNIFE GUARD – 4-POINT** [314]		
5	**286319**	**KNIFE GUARD – PLUGFREE END** [315]	**2**	
6	**286317**	**KNIFE GUARD – POINTED CENTER** [311]	**1**	

311. Used near the center of the header.
312. One 4–point special knife guard is used at the right end of the header, and to the left of the pointed center knife guard and pointed center hold-down.
313. Three 4-point end knife guards are used at the drive end of the header, and two 4-point end knife guards are used at the right end of the header.
314. Quantities: FD225 = 40, FD230 = 50, FD235 = 60, FD240 = 70, FD241 = 72, FD245 = 80, FD250 = 90.
315. One PlugFree end knife guard is used at each end of the header.

126 (Option) Header Tilt Foot Switch

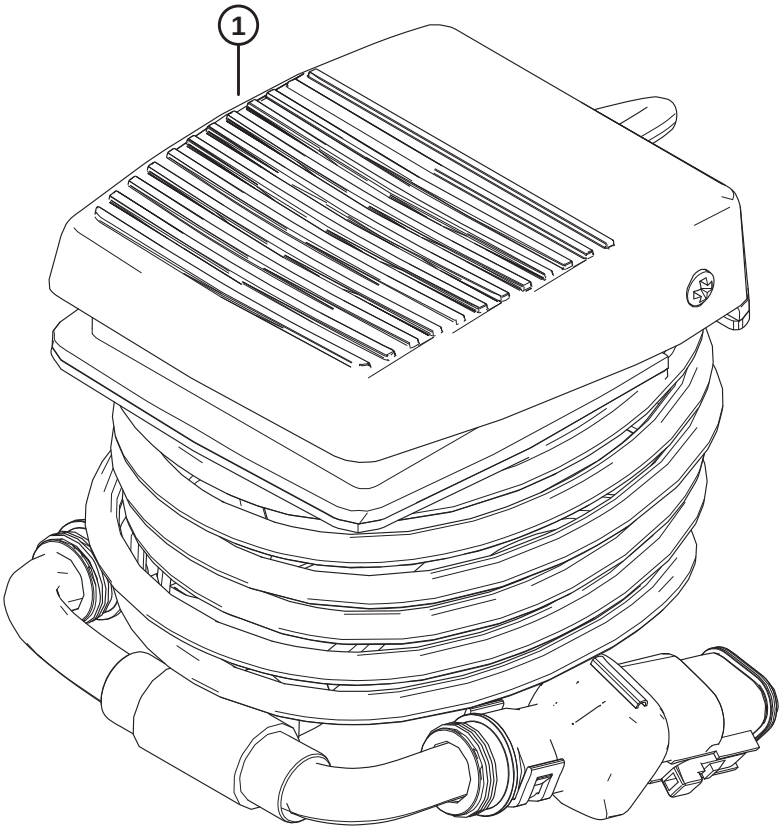

1035065

(OPTION) HEADER TILT FOOT SWITCH

Ref	Part Number	Description	Qty	Serial Number
	B7040	KIT – FOOTSWITCH TILT/FOREAFT [316]		
1	314581	HARNESS – FOOT PEDAL	1	
	335563	DECAL – CONTOUR WHL FT SWITCH	1	
	335564	DECAL – TILT CONTROL FOOT SW	1	

316. Optional in-cab foot switch is used to activate header tilt for John Deere and AGCO combines. Kits are available through Whole Goods only.

127 (Option) High Wear Skid Shoes

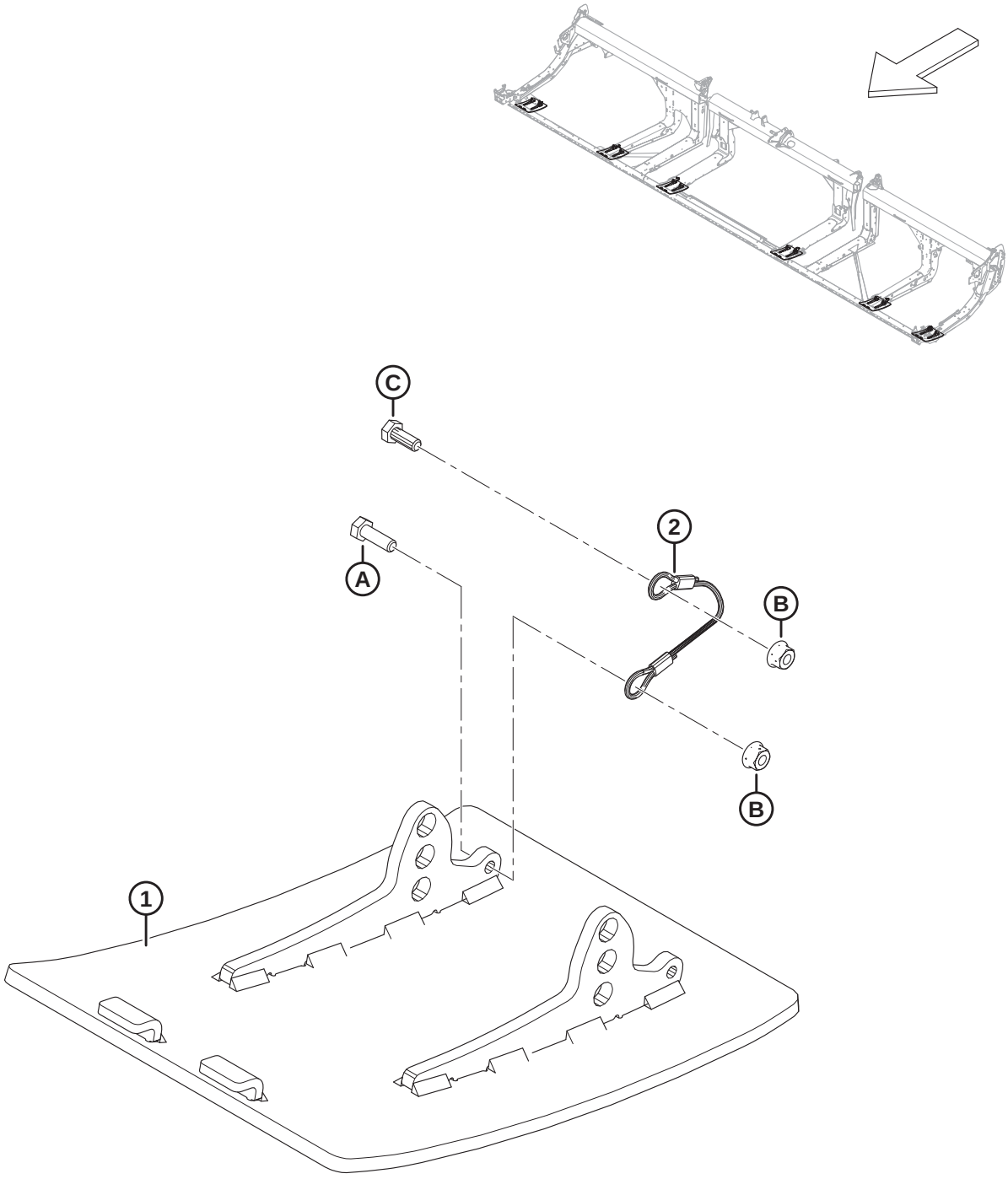

1034768

(OPTION) HIGH WEAR SKID SHOES

Ref	Part Number	Description	Qty	Serial Number
	B6801	KIT – HIGH WEAR, ABRASION RESISTANT STEEL SKID SHOES [317]		
1	313374	WELDT – HIGH WEAR SHOE	2	
2	312673	CABLE – STOP	2	
A	184652	BOLT – HEX HD TFL M8 X 1.25 X 25-8.8-AA1J		
B	135337	NUT – HEX FLG CTR LK M8 X 1.25-8-AA1J		
C	30715	BOLT – HEX HD TFL		

317. The kit includes two high wear steel skid shoes, two cable stops, hardware, and instructions. Two kits are required for FD225 headers. Three kits are required for FD230 and larger headers. Kits are available through Whole Goods only.

128 (Option) Reel Tine Tube Conversion Kits – Double Reel, 5 Bat to 6 Bat

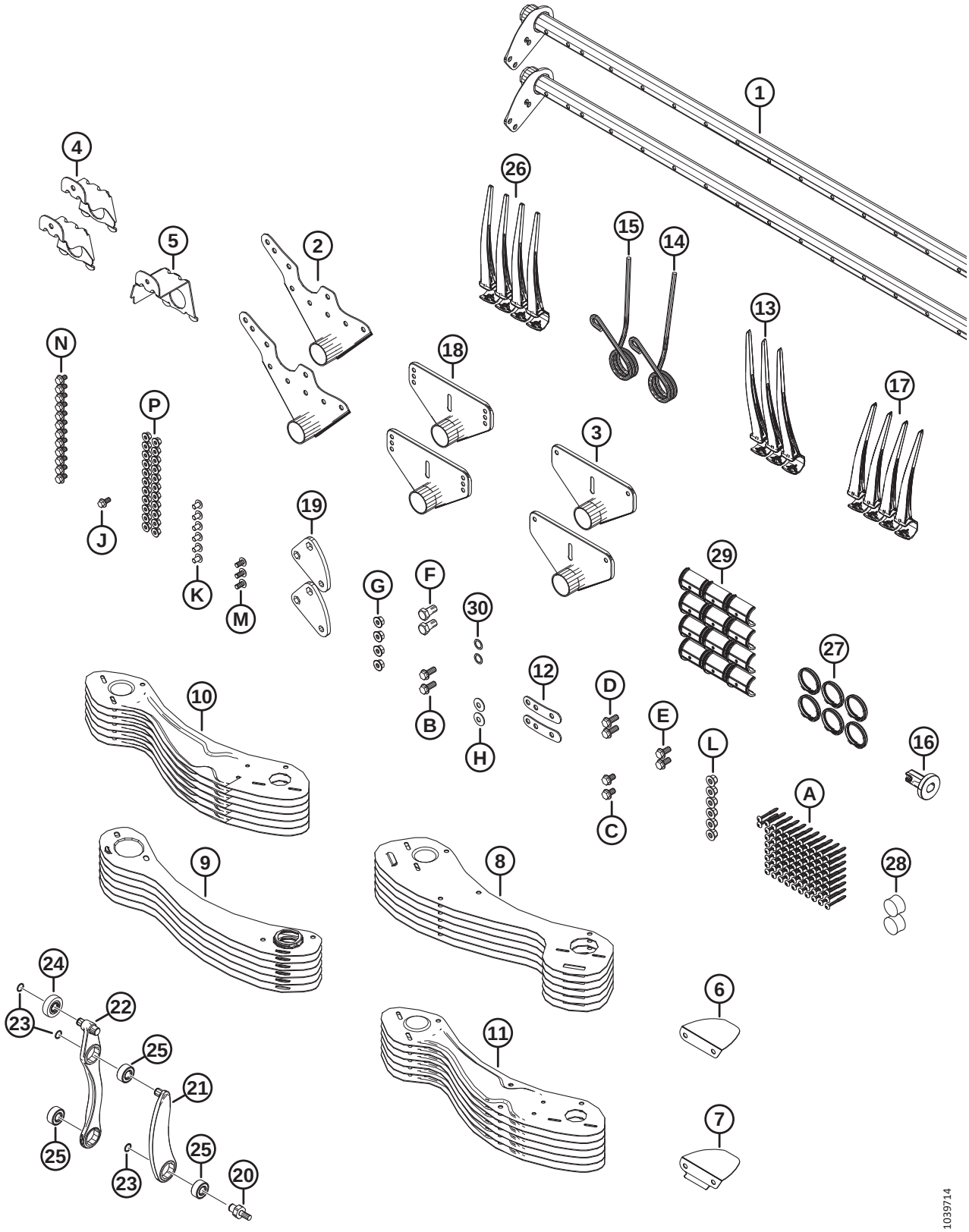

(OPTION) REEL TINE TUBE CONVERSION KITS – DOUBLE REEL, 5 BAT TO 6 BAT

Ref	Part Number	Description	Qty	Serial Number
	B7357	KIT – 30FT DR 5B TO 6B CONV. [318]		
	B7358	KIT – 35FT DR 5B TO 6B CONV. [318]		
	B7359	KIT – 41FT DR 5B TO 6B CONV. [318]		
1	311365	TINE TUBE – 30FT DR WIDE	2	
	311210	TINE TUBE – 35FT DR WIDE	2	
	311306	TINE TUBE – 41FT DR WIDE	2	
2	335924	ARM WELDT – CAM END	2	
3	311347	ARM WELDT – TAIL END	2	
4	311964	SUPPORT – WELDT CAM END	2	
5	311965	SUPPORT – WELDT TAIL END [319]	1	
6	311906	DEFLECTOR – CAM INBOARD	1	
7	311729	DEFLECTOR – CAM OUTBOARD	1	
8	273813	SHIELD – 6 BAT LH REEL CAM END	6	
9	311822	SHIELD – 6 BAT RH REEL TAIL END	6	
10	311753	SHIELD – OUTBOARD LH 6 BAT	6	
11	311752	SHIELD – OUTBOARD RH 6 BAT	6	
12	311672	STRAP	2	
13	360540	FINGER – PLASTIC, LH ANGLED, 45 MM (PKG OF 10) [320]		
14	311327	FINGER – CAM END BENT	1	
15	311325	FINGER – CAM END OUTBOARD	1	
16	273968	BUSHING – ENDSHIELD	1	
17	311523	FINGER – PLASTIC, RH ANGLED, 52 MM (PKG OF 10)	4	
18	273523	ARM WELDT – MID SPAN [321]		
19	228319	ARM – CRANK MACHINING	2	
20	340146	STUD	2	
21	311615	ARM – ASSEMBLY [322]	2	
22	311617	ARM – TINE CONTROL ASSY [323]	2	
23	273536	RING – RETAINING	6	
24	273524	BEARING – CAM FOLLOWER	2	
25	273347	BEARING	6	
26	174849	FINGER – PLASTIC HEAVY DUTY (PKG OF 10) [324]		
27	220941	CLAMP – TINE TUBE BUSHING-CENTER RIB (BOX OF 5) [325]		
28	137980	PLUG – TINE TUBE [326]		
29	220939	TINE TUBE BUSHING (BOX OF 25) [327]		

318. Kits are available through Whole Goods only.
319. FD230 only.
320. Quantities: FD230 = 3, FD235 = 2, FD241 = 2.
321. Quantities: FD230 = 2, FD235 = 4, FD241 = 4.
322. The arm assembly includes one retaining ring (MD #273536) and one bearing (MD #273347).
323. The tine control arm assembly includes two retaining rings (MD #273536), one cam follower bearing (MD #273524), and two bearings (MD #273347).
324. Quantities: FD230 = 76, FD235 = 89, FD241 = 106.
325. Quantities: FD230 = 6, FD235 = 8, FD241 = 8
326. Quantities: FD230 = 2, FD235 = 3, FD241 = 3.
327. Quantities: FD230 = 12, FD235 = 16, FD241 = 16.

(OPTION) REEL TINE TUBE CONVERSION KITS – DOUBLE REEL, 5 BAT TO 6 BAT

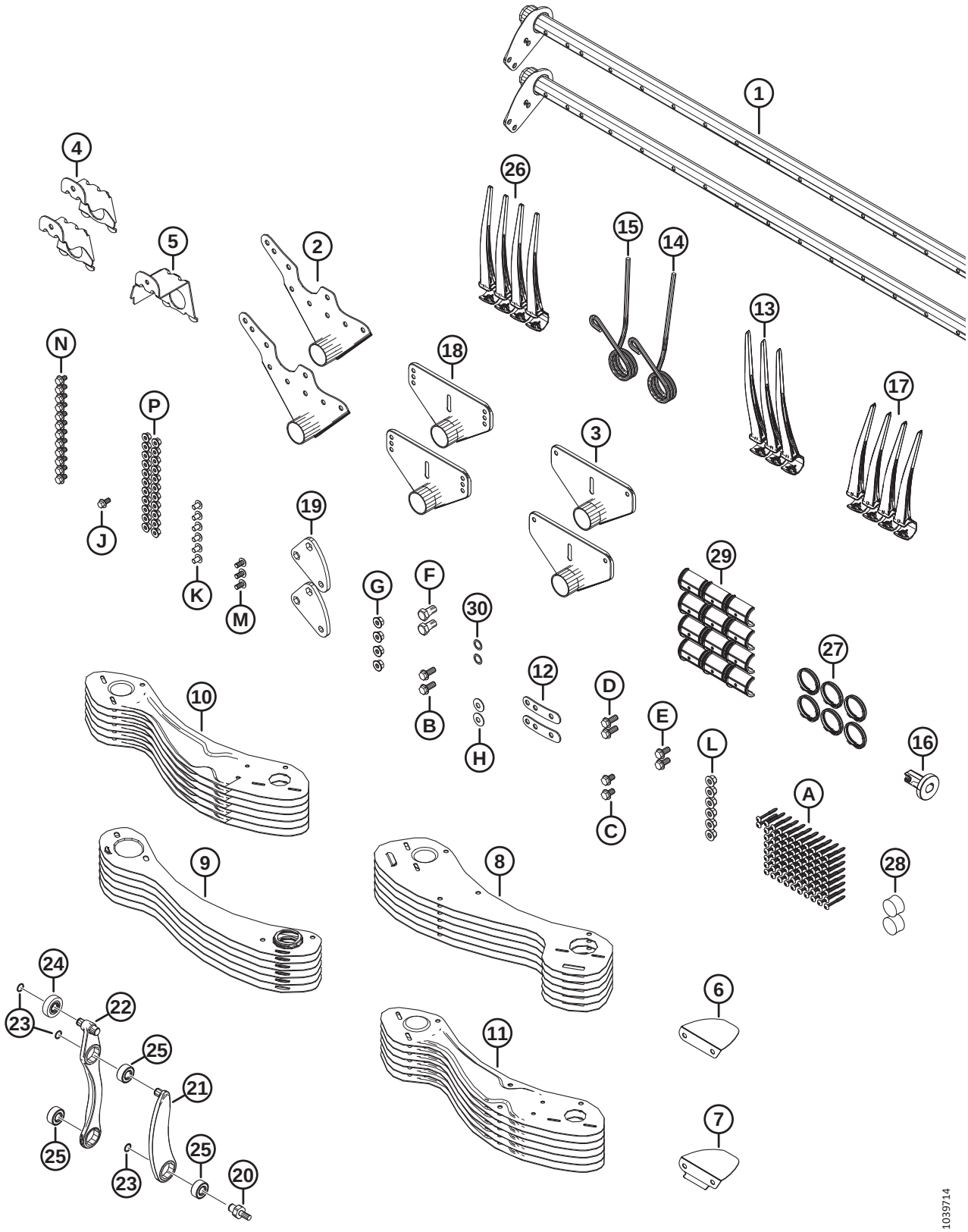

(OPTION) REEL TINE TUBE CONVERSION KITS – DOUBLE REEL, 5 BAT TO 6 BAT

Ref	Part Number	Description	Qty	Serial Number
30	**137529**	**SHIM – CRANK BEARING**	**2**	
A	**252687**	**SCREW – 48° PLASTITE TWIN HELIX**		
B	**320192**	**BOLT – HEX FLG HD M12 X 1.75 X 30-SPCL-8.8-ZINC**		
C	**320187**	**BOLT – HEX FLG HD M12 X 1.75 X 20-SPCL-8.8-ZINC**		
D	**320180**	**BOLT – HEX FLG HD M12 X 1.75 X 30-SPCL-8.8-ZINC**		
E	**320175**	**BOLT – HEX FLG HD TFLM12 X 1.75 X 25-SPCL-8.8-ZINC**		
F	**228316**	**BOLT – HEX HD M16 X 1.5 X 30-SPCL-8.8-ZINC**		
G	**184697**	**NUT – HEX SER FLG M12 X 1.75-8-AA1J**		
H	**184597**	**WASHER – CON SPRING M12-ZINC**		
J	**152655**	**BOLT – HEX FLG HD M10 X 1.5 X 20-8.8-AA1J**		
K	**136640**	**SCREW – TORX TRUSS HD M10 X 1.5 X 16 X SPCL-8.8-AA1J**		
L	**136431**	**NUT – HEX FLG CTR LOC M12 X 1.75-10**		
M	**136395**	**SCREW – TORX TRUSS HD M10 X 1.5 X 20 X SPCL-8.8-A3L**		
N	**136151**	**BOLT – HEX FLG HD TFL M10 X 1.5 X 16-8.8-AA1J**		
P	**135799**	**NUT – HEX FLG CTR LOC M10 X 1.5-10**		

129 (Option) Reel Tine Tube Conversion Kits – Double Reel, 6 Bat to 9 Bat

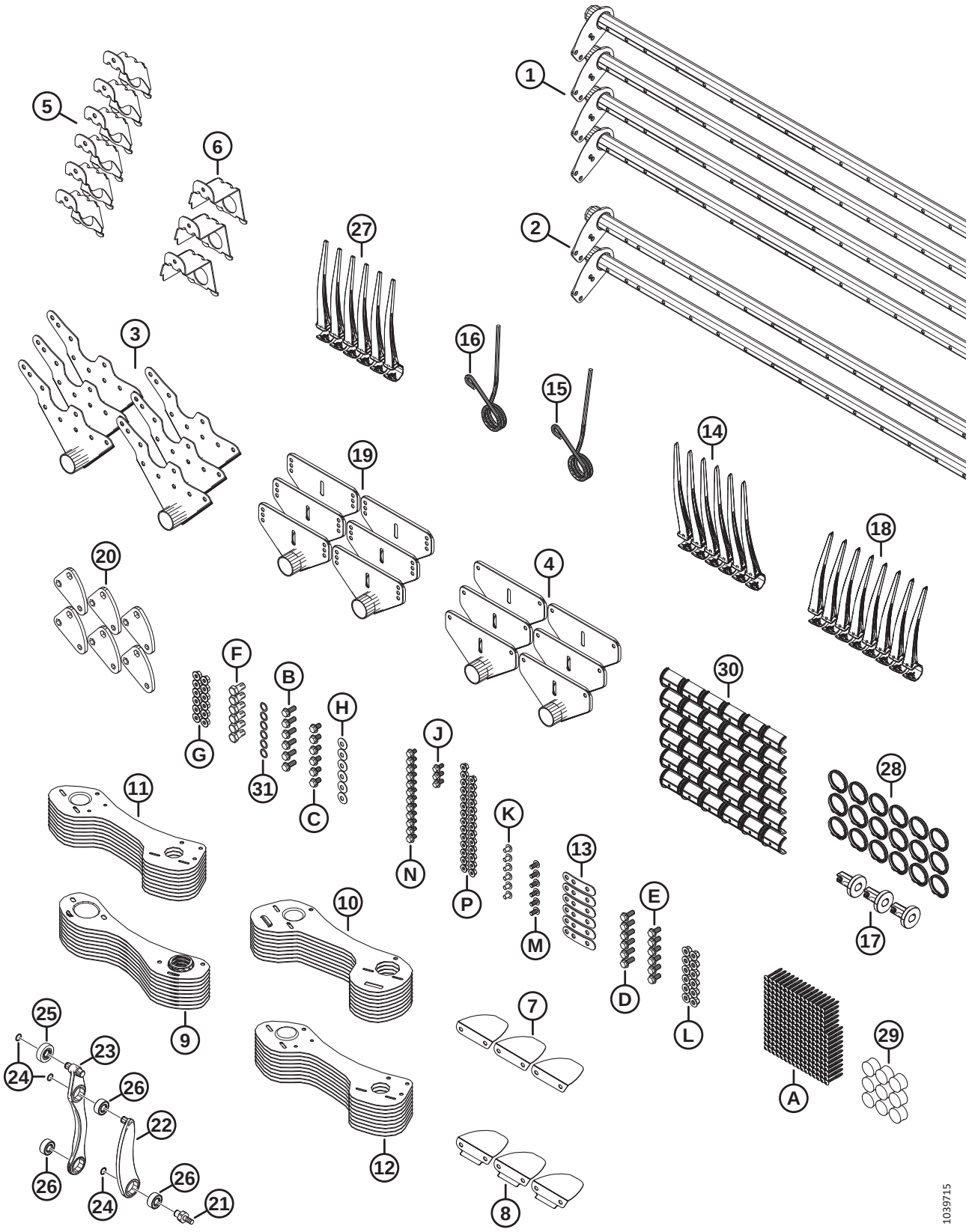

(OPTION) REEL TINE TUBE CONVERSION KITS – DOUBLE REEL, 6 BAT TO 9 BAT

Ref	Part Number	Description	Qty	Serial Number
	B7362	KIT – 30FT DR 6B TO 9B CONV. [328]		
1	311368	TINE TUBE – 30FT DR NARROW	4	
2	311365	TINE TUBE – 30FT DR WIDE	2	
3	335924	ARM WELDT – CAM END	6	
4	311347	ARM WELDT – TAIL END	6	
5	311964	SUPPORT – WELDT CAM END	6	
6	311965	SUPPORT – WELDT TAIL END	3	
7	311906	DEFLECTOR – CAM INBOARD	3	
8	311729	DEFLECTOR – CAM OUTBOARD	3	
9	311870	SHIELD – 9 BAT RH REEL, TAIL END	9	
10	311868	SHIELD – 9 BAT LH REEL, CAM END	9	
11	311864	SHIELD – OUTBOARD LH 9 BAT	9	
12	311863	SHIELD – OUTBOARD RH 9 BAT	9	
13	311672	STRAP	6	
14	360540	FINGER – PLASTIC, LH ANGLED, 45 MM (PKG OF 10)	6	
15	311327	FINGER – CAM END BENT	3	
16	311325	FINGER – CAM END OUTBOARD	3	
17	273968	BUSHING – ENDSHIELD	3	
18	311523	FINGER – PLASTIC, RH ANGLED, 52 MM (PKG OF 10)	8	
19	273523	ARM WELDT – MID SPAN	6	
20	228319	ARM – CRANK MACHINING	6	
21	340146	STUD	6	
22	311615	ARM – ASSEMBLY [329]	6	
23	311617	ARM – TINE CONTROL ASSY [330]	6	
24	273536	RING – RETAINING	18	
25	273524	BEARING – CAM FOLLOWER	6	
26	273347	BEARING	18	
27	174849	FINGER – PLASTIC HEAVY DUTY (PKG OF 10)	237	
28	220941	CLAMP – TINE TUBE BUSHING, CENTER RIB (BOX OF 5)	18	
29	137980	PLUG – TINE TUBE	9	
30	220939	TINE TUBE BUSHING (BOX OF 25)	36	
31	137529	SHIM – CRANK BEARING	6	
A	252687	SCREW – 48° PLASTITE TWIN HELIX		
B	320192	BOLT – HEX FLG HD M12 X 1.75 X 30-SPCL-8.8-ZINC		
C	320187	BOLT – HEX FLG HD M12 X 1.75 X 20-SPCL-8.8-ZINC		
D	320180	BOLT – HEX FLG HD M12 X 1.75 X 30-SPCL-8.8-ZINC		
E	320175	BOLT – HEX FLG HD TFL M12 X 1.75 X 25-SPCL-8.8-ZINC		
F	228316	BOLT – HEX HD M16 X 1.5 X 30-SPCL-8.8-ZINC		
G	184697	NUT – HEX SER FLG M12 X 1.75-8-AA1J		

328. Kits are available through Whole Goods only.
329. The arm assembly includes one retaining ring (MD #273536) and one bearing (MD #273347).
330. The tine control arm assembly includes two retaining rings (MD #273536), one cam follower bearing (MD #273524), and two bearings (MD #273347).

(OPTION) REEL TINE TUBE CONVERSION KITS – DOUBLE REEL, 6 BAT TO 9 BAT

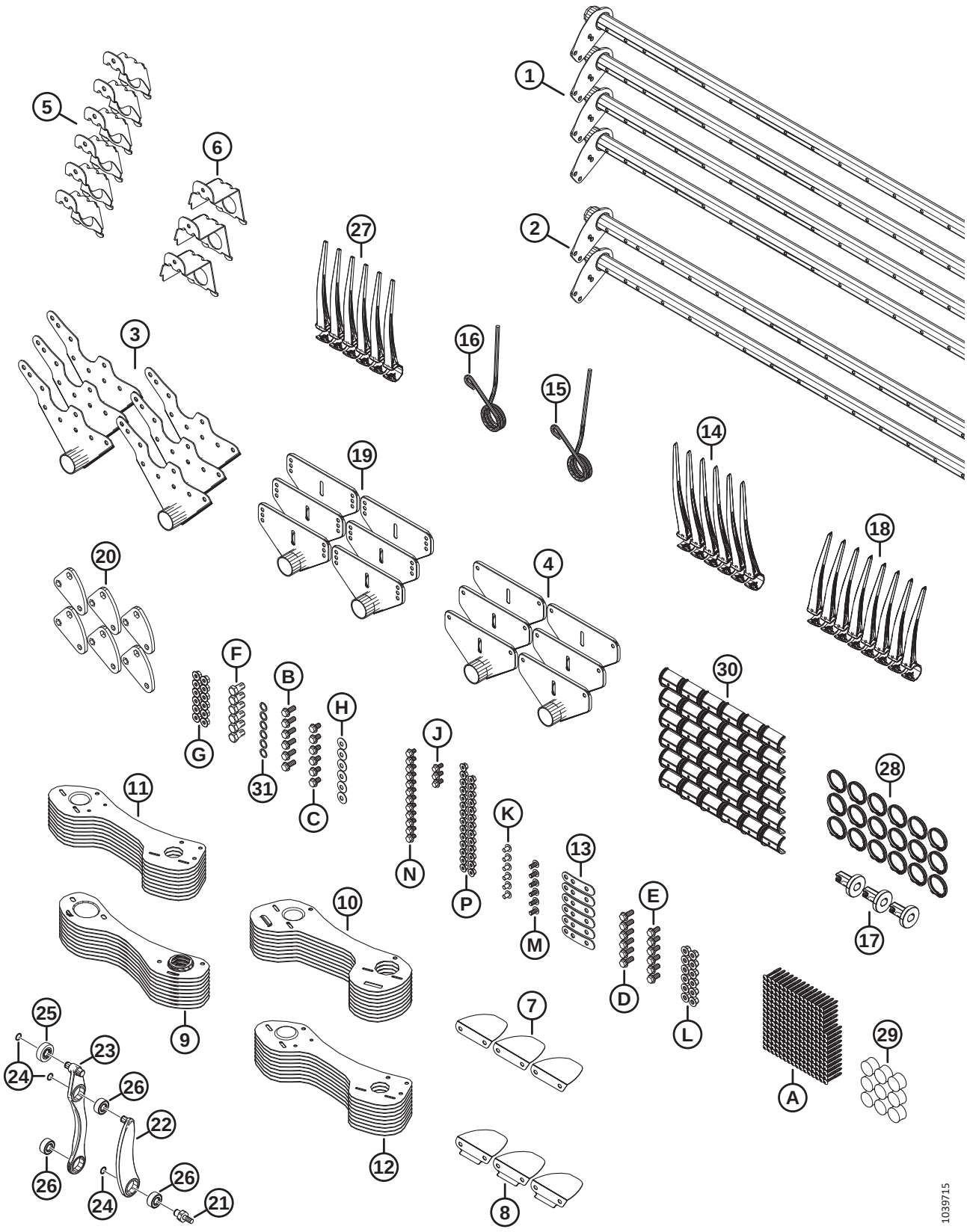

(OPTION) REEL TINE TUBE CONVERSION KITS – DOUBLE REEL, 6 BAT TO 9 BAT

Ref	Part Number	Description	Qty	Serial Number
H	184597	WASHER – CON SPRING M12-ZINC		
J	152655	BOLT – HEX FLG HD M10 X 1.5 X 20-8.8-AA1J		
K	136640	SCREW – TORX TRUSS HD M10 X 1.5 X 16 X SPCL-8.8-AA1J		
L	136431	NUT – HEX FLG CTR LOC M12 X 1.75-10		
M	136395	SCREW – TORX TRUSS HD M10 X 1.5 X 20 X SPCL-8.8-A3L		
N	136151	BOLT – HEX FLG HD TFL M10 X 1.5 X 16-8.8-AA1J		
P	135799	NUT – HEX FLG CTR LOC M10 X 1.5-10		

130 (Option) Reel – Two Speed

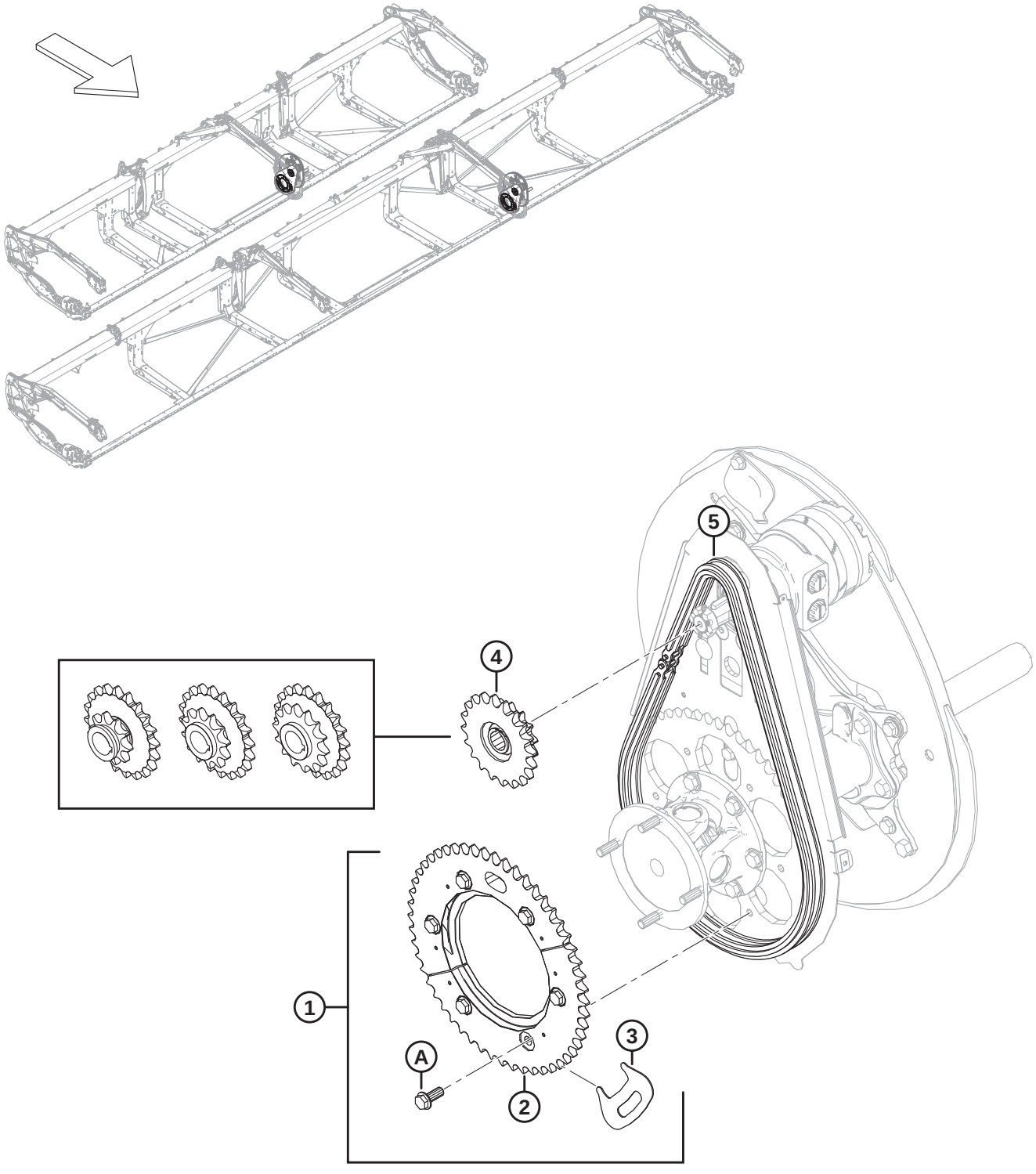

1032643

(OPTION) REEL – TWO SPEED

Ref	Part Number	Description	Qty	Serial Number
1	311882	KIT – 2 SPEED [331]	1	
2	273689	SPROCKET – MACHINED 52 T	1	
3	273594	TOOL – SPROCKET	1	
4	273451	SPROCKET – DUAL 10-20 (JOHN DEERE) [332]	1	
	273452	SPROCKET – DUAL 12-20 (MASSEY) [333]	1	
	273453	SPROCKET – DUAL 14-20 (CNH, NH) [334]	1	
5	273907	CHAIN – RC 60 ENDLESS 76 LINKS [335]	OPT	
	273963	CHAIN – RC C/W CONNECTOR 76 LINKS [336]	OPT	
A	320192	BOLT – HEX FLG HD M12 X 1.75 X 30-SPCL-8.8-AA1J		

331. The kit includes 52 tooth machined sprocket (MD #273689), sprocket tool (MD #273594), six bolts (MD #320180), and instructions.
332. John Deere, 2000 PSI reel drive circuit pressure.
333. Massey Ferguson®, 2500 PSI reel drive circuit pressure.
334. Case and New Holland, 3000 PSI reel drive circuit pressure.
335. The chain is **NOT** included in kit (MD #311882). A new chain is recommended if the kit is being installed on a unit with hours and it is not a new header. A worn chain will affect the register of the sprocket halves to one another.
336. The chain is **NOT** included in kit (MD #311882). A new chain is recommended if the kit is being installed on a unit with hours and it is not a new header. A worn chain will affect the register of the sprocket halves to one another.

131 (Option) Rice Divider Rods

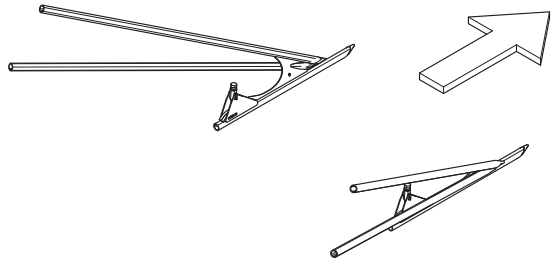

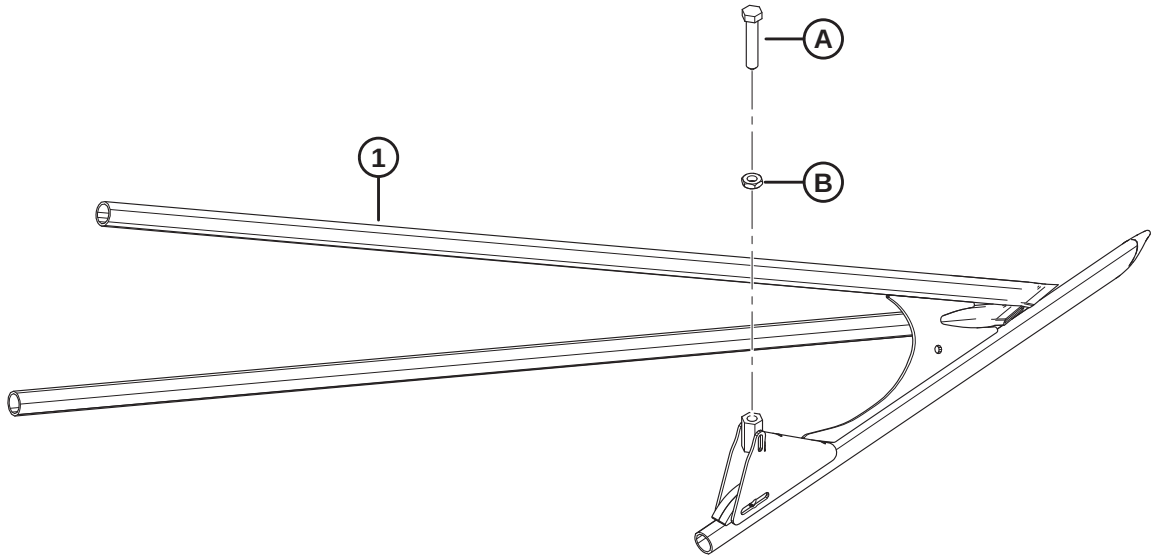

1034744

(OPTION) RICE DIVIDER RODS

Ref	Part Number	Description	Qty	Serial Number
	B7238	RICE DIVIDER RODS [337]		
1	340095	DIVIDER – RICE LH TUBE WELDT	1	
	340096	DIVIDER – RICE RH TUBE WELDT	1	
A	232762	SET SCREW – MACHINED		
B	184696	NUT – HEX THIN M12 X 1.75-05-AA1J		

337. Kits are available through Whole Goods only.

132 (Option) Rock Retarder Kit

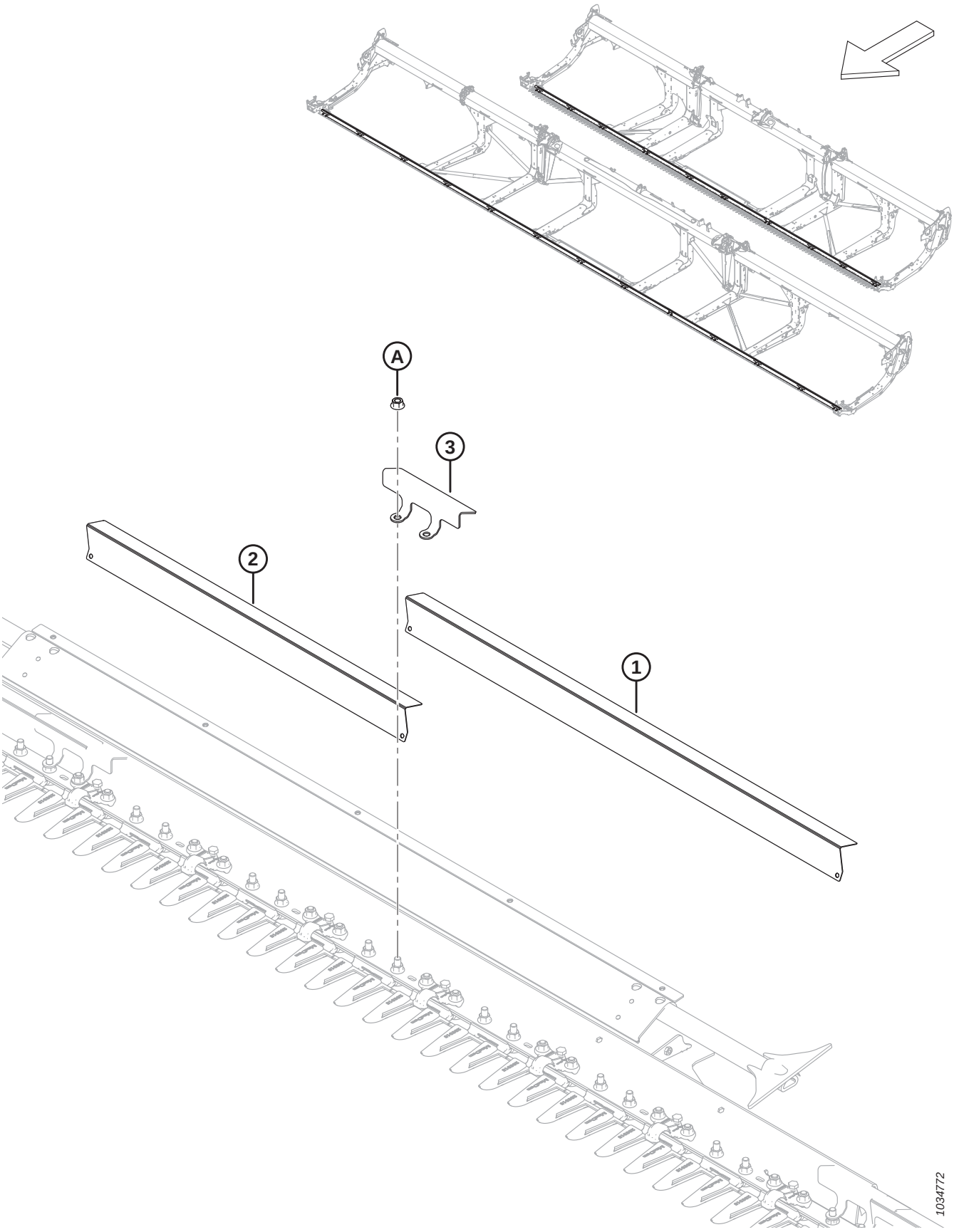

(OPTION) ROCK RETARDER KIT

Ref	Part Number	Description	Qty	Serial Number
	B7122	KIT – ROCK RETARDER, FD225, FD230, FD235, AND FD241 [338]		
	B7123	KIT – ROCK RETARDER KIT, FD240, FD245, AND FD250 [338]		
1	233800	DEFLECTOR – ROCK GUARD LONG [339]		
2	233799	DEFLECTOR – ROCK GUARD SHORT [340]		
3	233635	CLAMP – ROCK GUARD [341]		
A	136036	NUT – HEX SM FLG M12 X 1.75-8-AA1J		

338. Kits are available through Whole Goods only.
339. Quantities per kit: B7122 = 4, B7123 = 10.
340. Quantities per kit: B7122 = 9, B7123 = 4.
341. Quantities per kit: B7122 = 14, B7123 = 15.

133 (Option) Service Kit – Pointed Guards, Coarse Knives

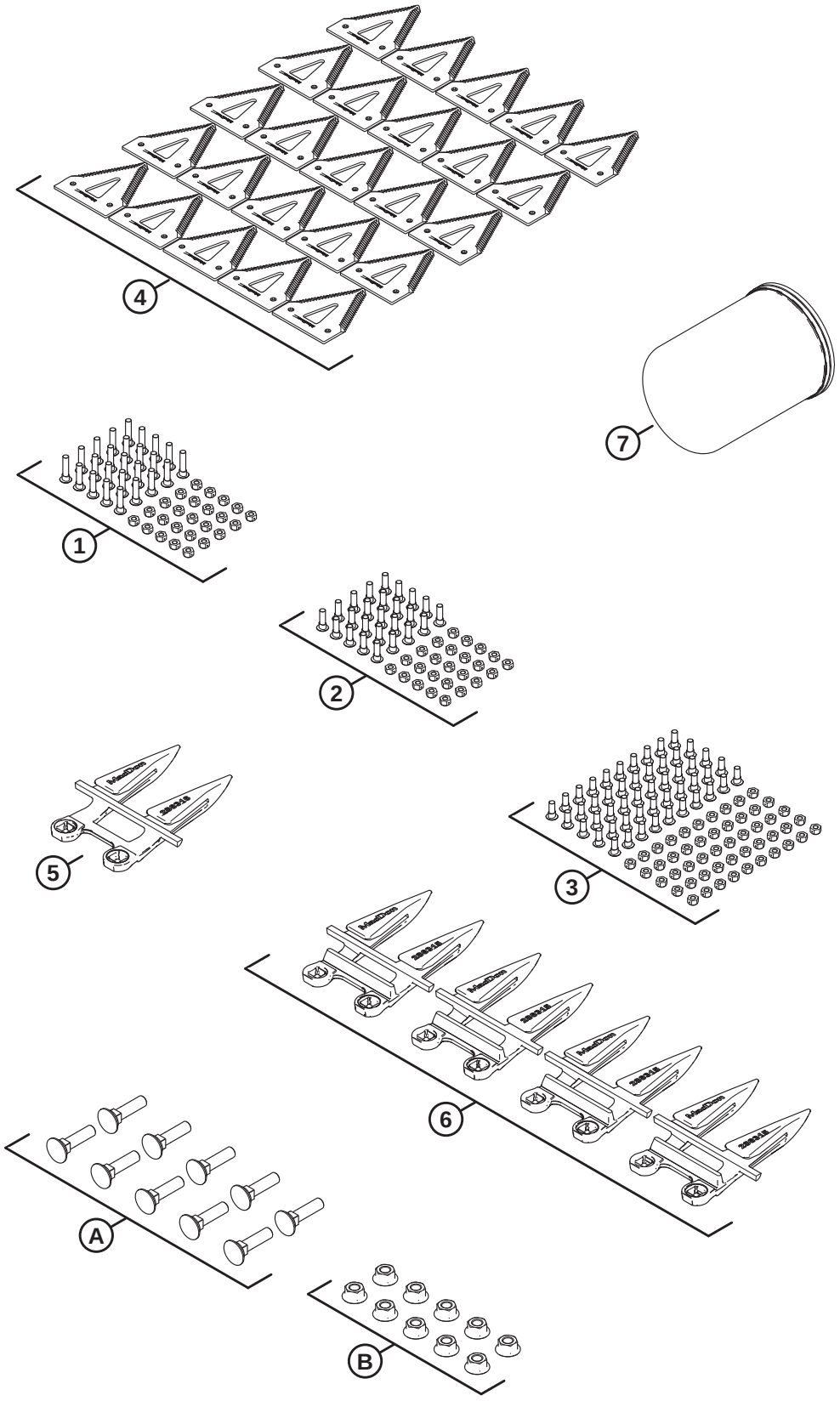

1034897

(OPTION) SERVICE KIT – POINTED GUARDS, COARSE KNIVES

Ref	Part Number	Description	Qty	Serial Number
	B7155	**KIT – SERVICE, POINTED, COARSE** [342]		
	311789	KIT – FD2 SERVICE PTD CRS [343]		
1	286477	KIT – SCREW M6 X 29 C/W NUT 25PK	1	
2	286476	KIT – SCREW M6 X 22 C/W NUT 25PK	1	
3	286475	KIT – SCREW M6 X 18 C/W NUT 50PK	1	
4	286461	SECTION – CLEARCUT COARSE 25PK	1	
5	286316	KNIFE GUARD – POINTED END	1	
6	286315	KNIFE GUARD – POINTED	4	
7	320360	FILTER – HYD C/W 2X SEALS	1	
A	226295	BOLT – RHSN SPCL M12 X 47-8.8		
B	136036	NUT – HEX SM FLG M12 X 1.75-8-AA1J		

342. Kits are available through Whole Goods only.
343. The kit includes all listed parts.

134 (Option) Service Kit – PlugFree™ Guards, Coarse Knives

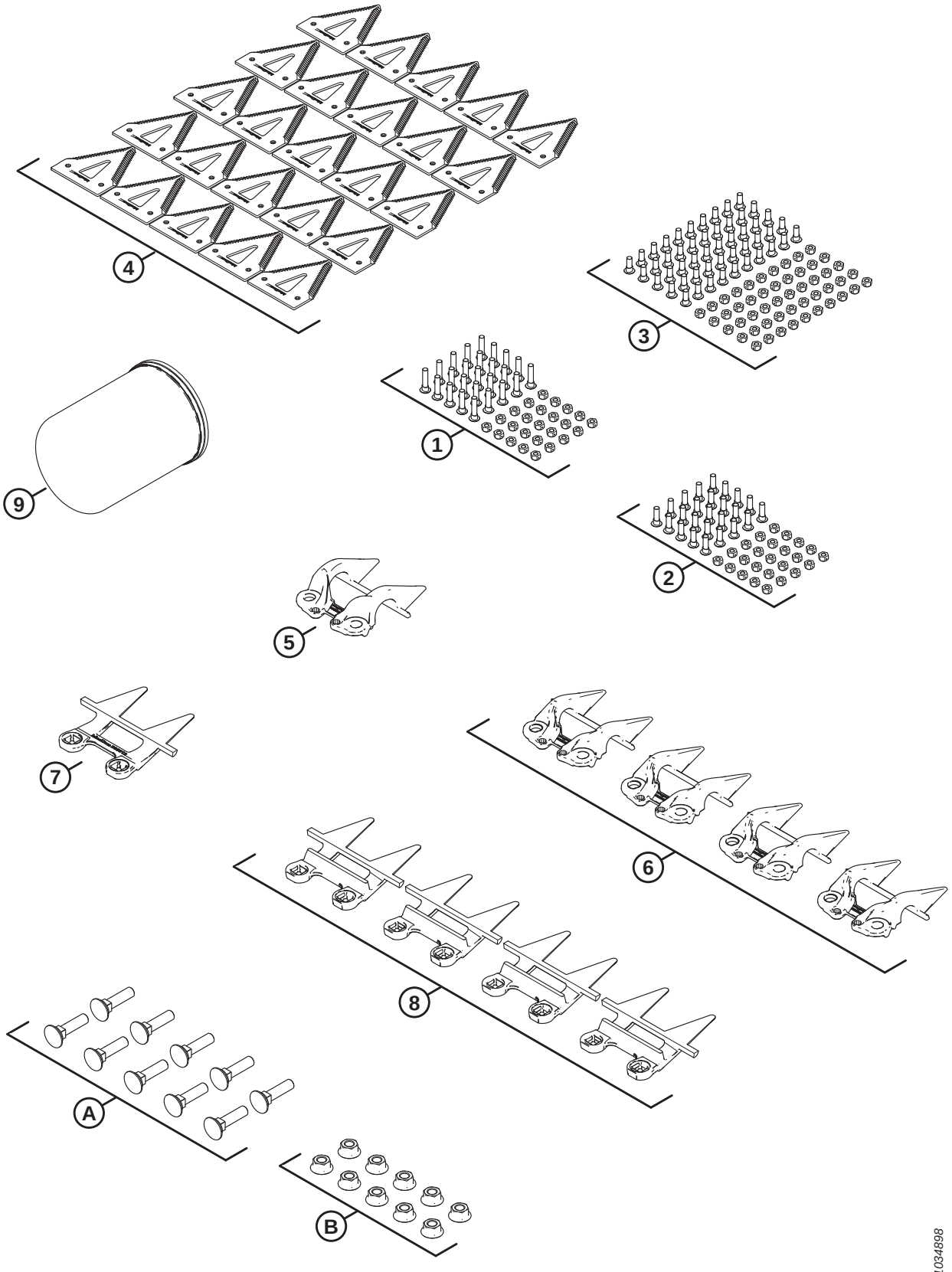

(OPTION) SERVICE KIT – PLUGFREE™ GUARDS, COARSE KNIVES

Ref	Part Number	Description	Qty	Serial Number
	B7156	**KIT – SERVICE, PLUGFREE, COARSE** [344]		
	311790	KIT – FD2 SERVICE PF CRS [345]		
1	286477	KIT – SCREW M6 X 29 C/W NUT 25PK	1	
2	286476	KIT – SCREW M6 X 22 C/W NUT 25PK	1	
3	286475	KIT – SCREW M6 X 18 C/W NUT 50PK	1	
4	286461	SECTION – CLEARCUT COARSE 25PK	1	
5	286331	HOLD-DOWN – PLUGFREE END	1	
6	286330	HOLD-DOWN – PLUGFREE	4	
7	286319	KNIFE GUARD – PLUGFREE END	1	
8	286318	KNIFE GUARD – PLUGFREE	4	
9	320360	FILTER – HYD C/W 2X SEALS	1	
A	226295	BOLT – RHSN SPCL M12 X 47-8.8		
B	136036	NUT – HEX SM FLG M12 X 1.75-8-AA1J		

344. Kits are available through Whole Goods only.
345. The kit includes all listed parts.

135 (Option) Service Kit Plus – Single Knife

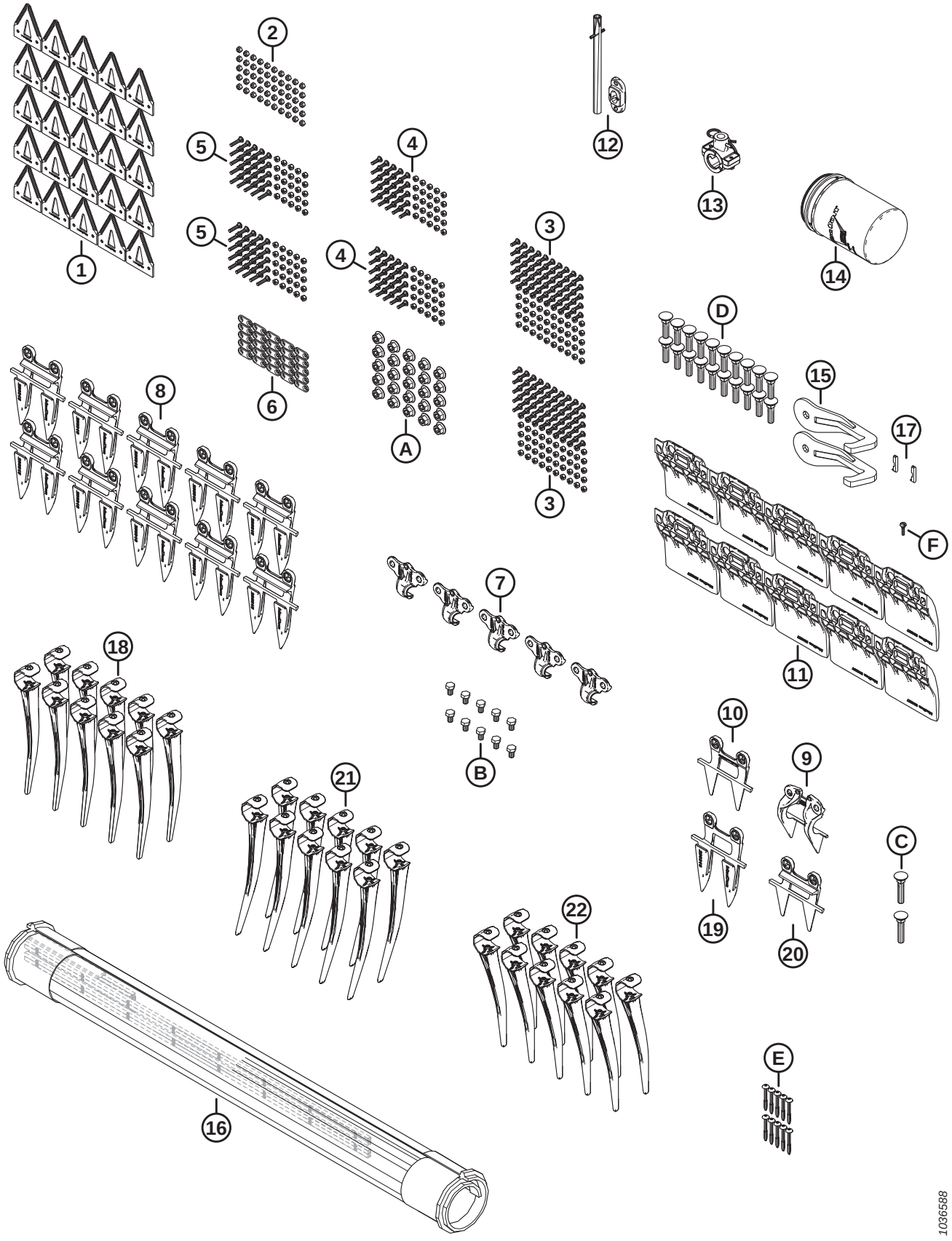

(OPTION) SERVICE KIT PLUS – SINGLE KNIFE

Ref	Part Number	Description	Qty	Serial Number
	B7365	KIT – SERVICE PLUS, SK FD2 [346]		
	340492	KIT – SERVICE PLUS, SK FD2 [347]		
1	286461	SECTION – CLEARCUT COARSE 25PK	1	
2	286479	KIT – NUT CTR LOC CSK M6 X 1 50PK	1	
3	286475	KIT – SCREW M6 X 18 C/W NUT 50PK	2	
4	286476	KIT – SCREW M6 X 22 C/W NUT 25PK	2	
5	286477	KIT – SCREW M6 X 29 C/W NUT 25PK	2	
6	286481	BAR – REINFORCEMENT 25PK	1	
7	286329	HOLD-DOWN – POINTED	5	
8	286315	KNIFE GUARD – POINTED	10	
9	286331	HOLD-DOWN – PLUGFREE END	1	
10	286319	KNIFE GUARD – PLUGFREE END	1	
11	286257	SHOE – WEARPLATE CUTTERBAR	10	
12	337152	KIT – FINGER [348]	1	
13	276839	KIT – FINGER HOLDER SPLIT, 5X [349]	1	
14	320360	FILTER – HYD C/W 2X SEALS	1	
15	258876	WELDT – BREAKAWAY HOOK	2	
16	319105	KIT – DRAPER REPAIR 50 INCH [350]	1	
	319095	KIT – DRAPER CONNECTOR 50 INCH [351]	2	
17	275864	KEY – DRAPER DRIVE MOTOR	2	
18	174849	FINGER – PLASTIC HEAVY DUTY (PKG OF 10)	1	
19	286316	KNIFE GUARD – POINTED END	1	
20	286318	KNIFE GUARD – PLUGFREE	1	
21	311523	FINGER – PLASTIC, RH ANGLED, 52 MM (PKG OF 10)	1	
22	**360540**	**FINGER – PLASTIC, LH ANGLED, 45 MM (PKG OF 10)**	**1**	
A	136036	NUT – HEX SM FLG M12 X 1.75-8-AA1J		
B	136005	BOLT – HEX HD FINE TFL M10 X 1.25 X 16-8.8-AA1J		
C	226280	BOLT – RHSN SPCL M12 X 60-8.8		
D	226295	BOLT – RHSN SPCL M12 X 47-8.8		
E	252687	SCREW – 48° PLASTITE TWIN HELIX		
F	135630	SCREW – BHRN #12-24 NC X 0.920 IN. LG (QTY 50)		

346. Kits are available through Whole Goods only.
347. The kit includes all listed parts.
348. The kit includes spring pin (MD #7642) and guide (MD #337143).
349. The kit includes 5 split finger holders (NSS), 10 spacers (NSS), 5 hairpins (MD #123180), hardware, and instructions.
350. The kit includes draper repair section (NSS) and two draper connector kits (MD #319095).
351. For service parts, refer to Section *11 Draper, page 21*.

136 (Option) Service Kit Plus – Double Knife

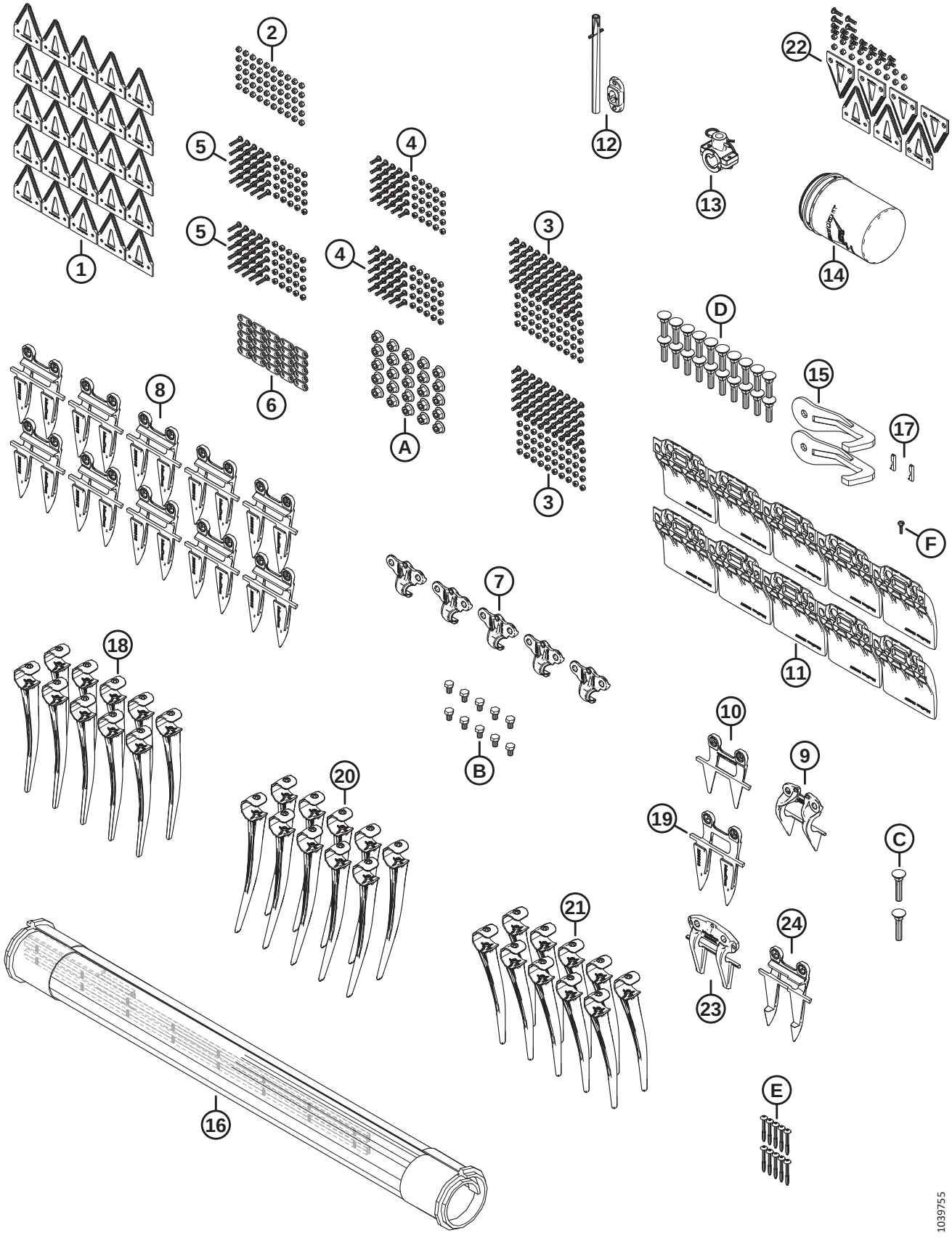

(OPTION) SERVICE KIT PLUS – DOUBLE KNIFE

Ref	Part Number	Description	Qty	Serial Number
	B7366	KIT – SERVICE PLUS, DK FD2 [352]		
	340493	KIT – SERVICE PLUS, DK FD2 [353]		
1	286461	SECTION – CLEARCUT COARSE 25PK	1	
2	286479	KIT – NUT CTR LOC CSK M6 X 1 50PK	1	
3	286475	KIT – SCREW M6 X 18 C/W NUT 50PK	2	
4	286476	KIT – SCREW M6 X 22 C/W NUT 25PK	2	
5	286477	KIT – SCREW M6 X 29 C/W NUT 25PK	2	
6	286481	BAR – REINFORCEMENT 25PK	1	
7	286329	HOLD-DOWN – POINTED	5	
8	286315	KNIFE GUARD – POINTED	10	
9	286331	HOLD-DOWN – PLUGFREE END	1	
10	286319	KNIFE GUARD – PLUGFREE END	1	
11	286257	SHOE – WEARPLATE CUTTERBAR	10	
12	337152	KIT – FINGER [354]	1	
13	276839	KIT – FINGER HOLDER SPLIT, 5X [355]	1	
14	320360	FILTER – HYD C/W 2X SEALS	1	
15	258876	WELDT – BREAKAWAY HOOK	2	
16	319105	KIT – DRAPER REPAIR 50 INCH [356]	1	
	319095	KIT – DRAPER CONNECTOR 50 INCH [357]	2	
17	275864	KEY – DRAPER DRIVE MOTOR	2	
18	174849	FINGER – PLASTIC HEAVY DUTY (PKG OF 10)	1	
19	286316	KNIFE GUARD – POINTED END	1	
20	311523	FINGER – PLASTIC, RH ANGLED, 52 MM (PKG OF 10)	1	
21	**360540**	**FINGER – PLASTIC, LH ANGLED, 45 MM (PKG OF 10)**	**1**	
22	**286861**	**KIT – CLEARCUT COARSE CENTER** [358]	**1**	
23	286332	HOLD-DOWN – POINTED CENTER	1	
24	286317	KNIFE GUARD – POINTED CENTER	1	
A	136036	NUT – HEX SM FLG M12 X 1.75-8-AA1J		
B	136005	BOLT – HEX HD FINE TFL M10 X 1.25 X 16-8.8-AA1J		
C	226280	BOLT – RHSN SPCL M12 X 60-8.8		
D	226295	BOLT – RHSN SPCL M12 X 47-8.8		
E	252687	SCREW – 48° PLASTITE TWIN HELIX		
F	135630	SCREW – BHRN #12-24 NC X 0.920 IN. LG (QTY 50)		

352. Kits are available through Whole Goods only.
353. The kit includes all listed parts.
354. The kit includes spring pin (MD #7642) and guide (MD #337143).
355. The kit includes 5 split finger holders (NSS), 10 spacers (NSS), 5 hairpins (MD #123180), hardware, and instructions.
356. The kit includes draper repair section (NSS) and two draper connector kits (MD #319095).
357. For service parts, refer to Section *11 Draper, page 21*.
358. The kit includes five ClearCut coarse top sections (NSS), two ClearCut coarse bottom sections (NSS), and hardware.

137 (Option) Side Hill Stabilizer Kit

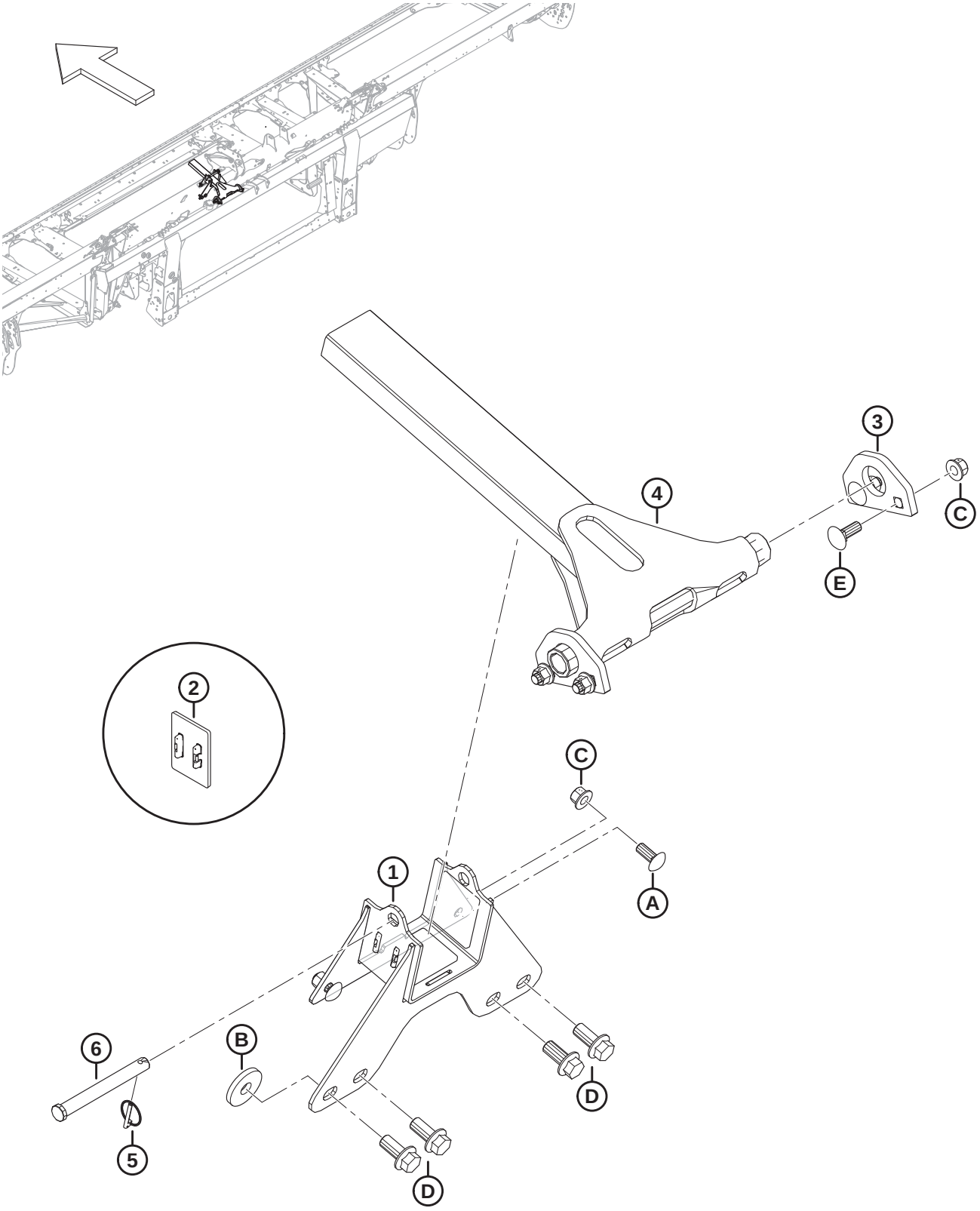

(OPTION) SIDE HILL STABILIZER KIT

Ref	Part Number	Description	Qty	Serial Number
	B7028	KIT – SIDE HILL STABILIZER KIT [359]		
1	258732	ASSY – SIDE HILL STAB. BRACKET [360]	1	
2	273831	PAD – REEL DRIVE WEAR	3	
3	258343	LUG – SIDE HILL STABILIZER	2	
4	258326	WELDT – SIDE HILL STABILIZER	1	
5	50193	PIN – LYNCH	1	
6	49378	PIN – CLEVIS	1	
A	152702	BOLT – RHSSN M12 X 1.75 X 30-8.8-AA1J		
B	152009	WASHER – HARDENED 5/8		
C	136431	NUT – HEX FLG CTR LOC M12 X 1.75-10		
D	136378	BOLT – HEX FLG HD TFL M16 X 2 X 35-10.9		
E	136291	BOLT – RHSN TFL M12 X 1.75 X 35-8.8-ZINC		

359. Kits are available through Whole Goods only.
360. The bracket assembly includes three wear pads (MD #273831).

138 (Option) Stabilizer Wheels

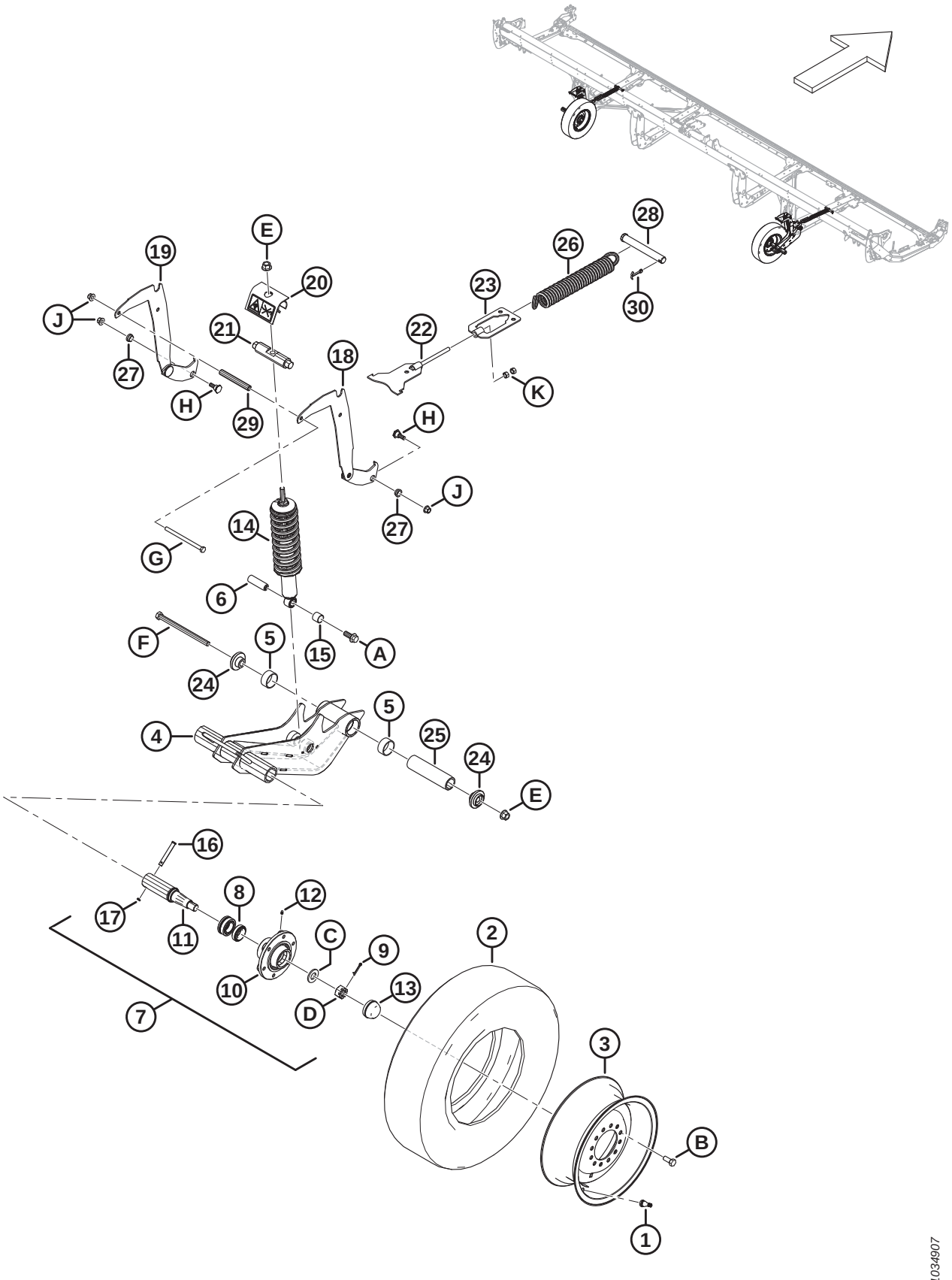

(OPTION) STABILIZER WHEELS

Ref	Part Number	Description	Qty	Serial Number
	C2051	STABILIZER WHEELS – KIT [361]		
	B6275	KIT – TIRES, 225/75R15 [361]		
1	230968	STEM – TIRE VALVE ASSY #TR-416	2	
2	230483	TIRE – ST 225/75 R15 LRE	2	
3	144531	WHEEL – 15 X 6 LB	2	
	327717	DECAL – TIRE PRESSURE	2	
	B6460	KIT – STABILIZER WHEELS [361]		
4	327682	ASSY – PIVOT ARM [362]	2	
5	327600	BUSHING – COMPOSITE	4	
6	316793	PIN	2	
7	316330	ASSY – HUB [363]	2	
8	316851	KIT – WHEEL BEARING	2	
9	18608	PIN – COTTER 3/16 DIA X 1.5 ZP	2	
10	316847	HUB	2	
11	316848	SPINDLE	2	
12	18671	FITTING – LUBE 1/4-28 UNF	2	
13	30520	CAP – DUST	2	
14	210340	DAMPENER – HEADER [364]	2	
15	133992	BUSHING – COMPOSITE	2	
16	101007	PIN – CLEVIS	2	
17	18648	PIN – COTTER 3/16 DIA X 1.25 ZP	2	
18	327656	WELDT – SUPPORT, HEIGHT ADJUST	2	
19	327655	WELDT – SUPPORT, HEIGHT ADJUST	2	
20	327089	ASSY – ANTI PRY [365]	2	
21	316284	PIN	2	
22	316096	SUPPORT – WELDT	2	
23	316095	SUPPORT – WELDT	2	
24	303839	CASTING – PLATE	4	
25	303525	PIN – PIVOT	2	
26	303520	SPRING – EXTENSION	2	
27	303492	BUSHING – COMPOSITE	4	
28	292692	PIN – CLEVIS	2	
29	210985	SPACER	2	
30	18609	PIN – COTTER 1/4 DIA X 2 ZP	2	
	327086	DECAL – ENERGY RELEASE	2	

361. Kits are available through Whole Goods only.
362. The pivot arm assembly includes two composite bushings (MD #327600).
363. The hub assembly includes pin (MD #18608), fitting (MD #18671), six bolts (MD #18916), dust cap (MD #30520), hub (MD #316847), spindle (MD #316848), wheel bearing kit (MD #316851), nut (MD #316859), and washer (MD #316860).
364. The dampener includes composite bushing (MD #133992).
365. The anti-pry assembly includes energy release decal (MD #327086).

(OPTION) STABILIZER WHEELS

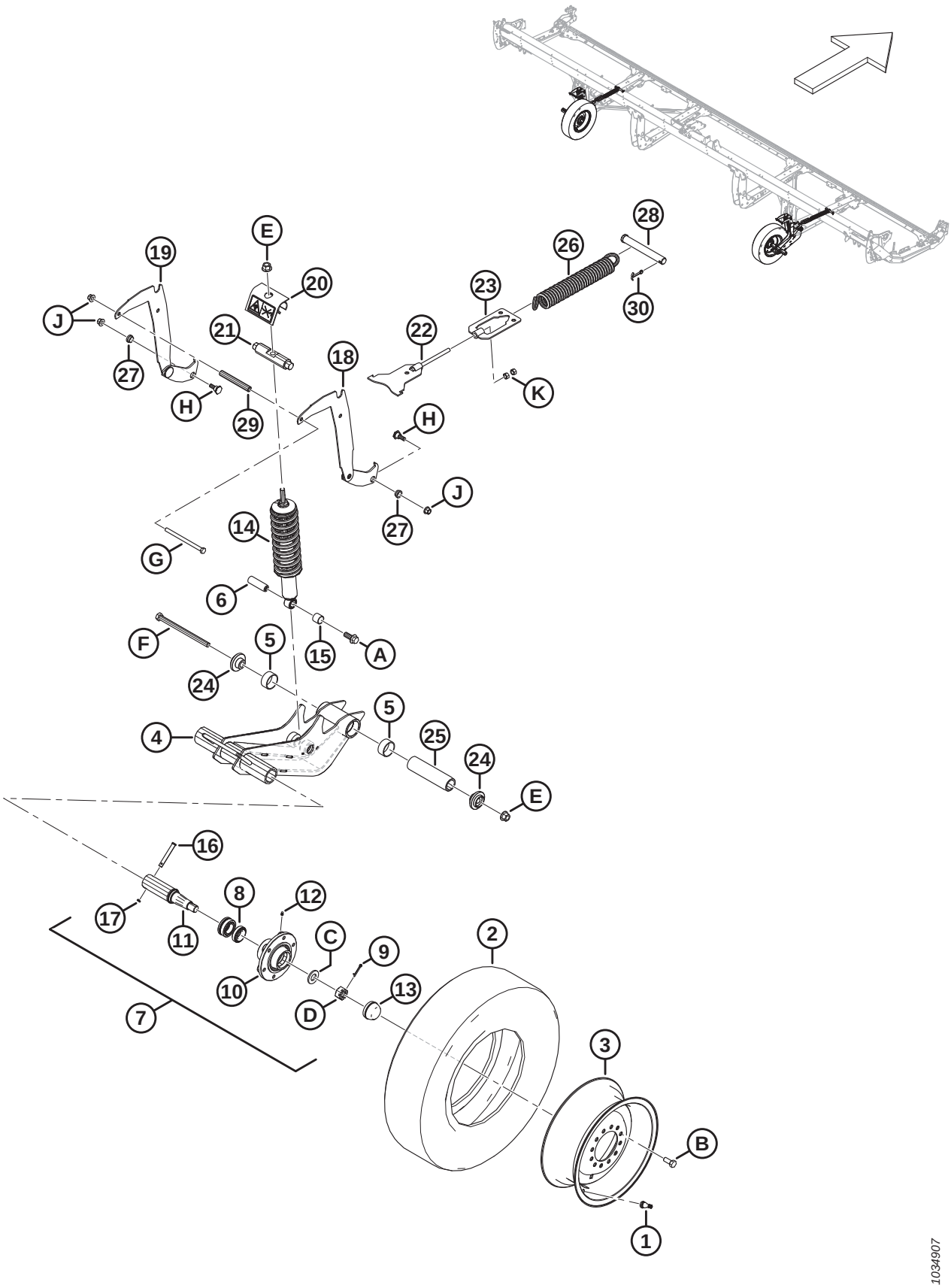

(OPTION) STABILIZER WHEELS

Ref	Part Number	Description	Qty	Serial Number
	316662	DECAL – HEIGHT SETTING	2	
A	320060	BOLT – HEX FLG HD TFL M16 X 2 X 40-10.9-ZINC		
B	18916	BOLT – 90° WHEEL 9/16 NF X 1.75 OL-AA1J		
C	316860	WASHER		
D	316859	NUT – SLOTTED		
E	136440	NUT – HEX FLG CTR LK M16 X 2-10-AA1J		
F	320011	BOLT – HEX HD M16 X 2 X 240-10.9-ZINC		
G	252272	BOLT – HEX HD TFL M12 X 1.75 X 180-10.9-ZINC		
H	303251	BOLT – 19 MM SHLDR M12 SPCL		
J	136431	NUT – HEX FLG CTR LOC M12 X 1.75-10		
K	135156	NUT – HEX M12 X 1.75-10-AA1J		

139 (Option) Steel Finger Kit

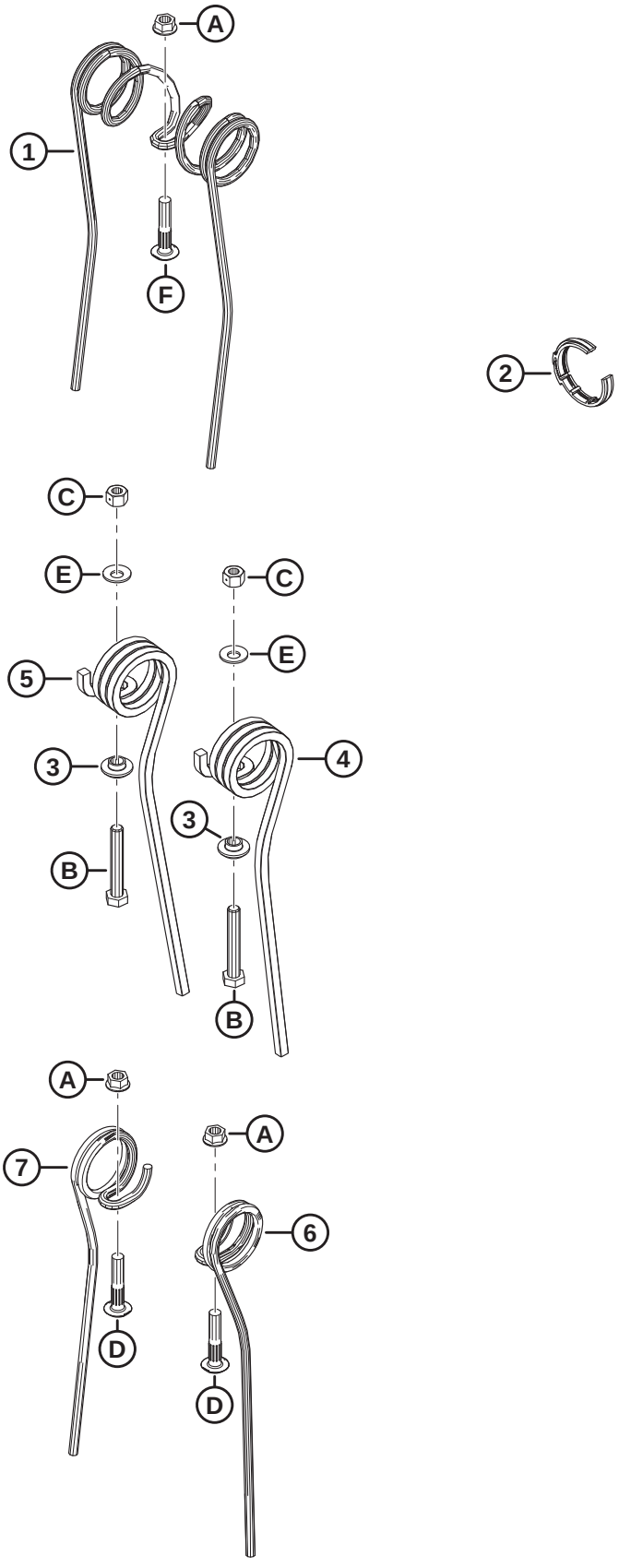

1036678

(OPTION) STEEL FINGER KIT

Ref	Part Number	Description	Qty	Serial Number
	311054	KIT – STEEL FINGER, 30 FT DR, 5 BAT [366]		
	311055	KIT – STEEL FINGER, 30 FT DR, 6 BAT [366]		
	311068	KIT – STEEL FINGER, 35 FT DR, 5 BAT [366]		
	311069	KIT – STEEL FINGER, 35 FT DR, 6 BAT [366]		
1	137092	FINGER [367]		
2	220941	CLAMP – TINE TUBE BUSHING - CENTER RIB (BOX OF 5) [368]		
3	273052	RETAINER – END FINGER [369]		
4	311321	FINGER – TAIL END OUTBOARD [370]		
5	311322	FINGER – TAIL END INBOARD [370]		
6	137754	FINGER – RH SINGLE CONCENTRIC [371]		
7	137519	FINGER – LH SINGLE CONCENTRIC [372]		
A	30228	NUT – FLG DT SM FACE 3/8-16 UNC-GR5-AA1J		
B	108172	BOLT – HEX HD M10 X 1.5 X 65-8.8-AA1J		
C	135800	NUT – HEX CTR LOC SPCL M10 X 1.5-9-AA1J		
D	137118	BOLT –BTN HD RIB NK 3/8 NC		
E	184584	WASHER – CON SPRING M10 STL SAE		

366. The kit includes all listed parts and instructions. Refer to the footnotes on individual service parts for quantities.
367. Quantities: FD230 DR 5 Bat = 135, FD230 DR 6 Bat = 135, FD235 DR 5 Bat = 143, FD235 DR 6 Bat = 171.
368. Quantities: FD230 DR 5 Bat = 6, FD230 DR 6 Bat = 8, FD235 DR 5 Bat = 8, FD235 DR 6 Bat = 10.
369. Quantities: FD230 DR 5 Bat = 10, FD230 DR 6 Bat = 12, FD235 DR 5 Bat = 10, FD235 DR 6 Bat = 12.
370. Quantities: FD230 DR 5 Bat = 5, FD230 DR 6 Bat = 6, FD235 DR 5 Bat = 5, FD235 DR 6 Bat = 6.
371. Quantities: FD230 DR 5 Bat = 4, FD230 DR 6 Bat = 6, FD235 DR 5 Bat = 18, FD235 DR 6 Bat = 24.
372. Quantities: FD230 DR 5 Bat = 10, FD230 DR 6 Bat = 12, FD235 DR 5 Bat = 30, FD235 DR 6 Bat = 36.

140 (Option) Stubble Lights

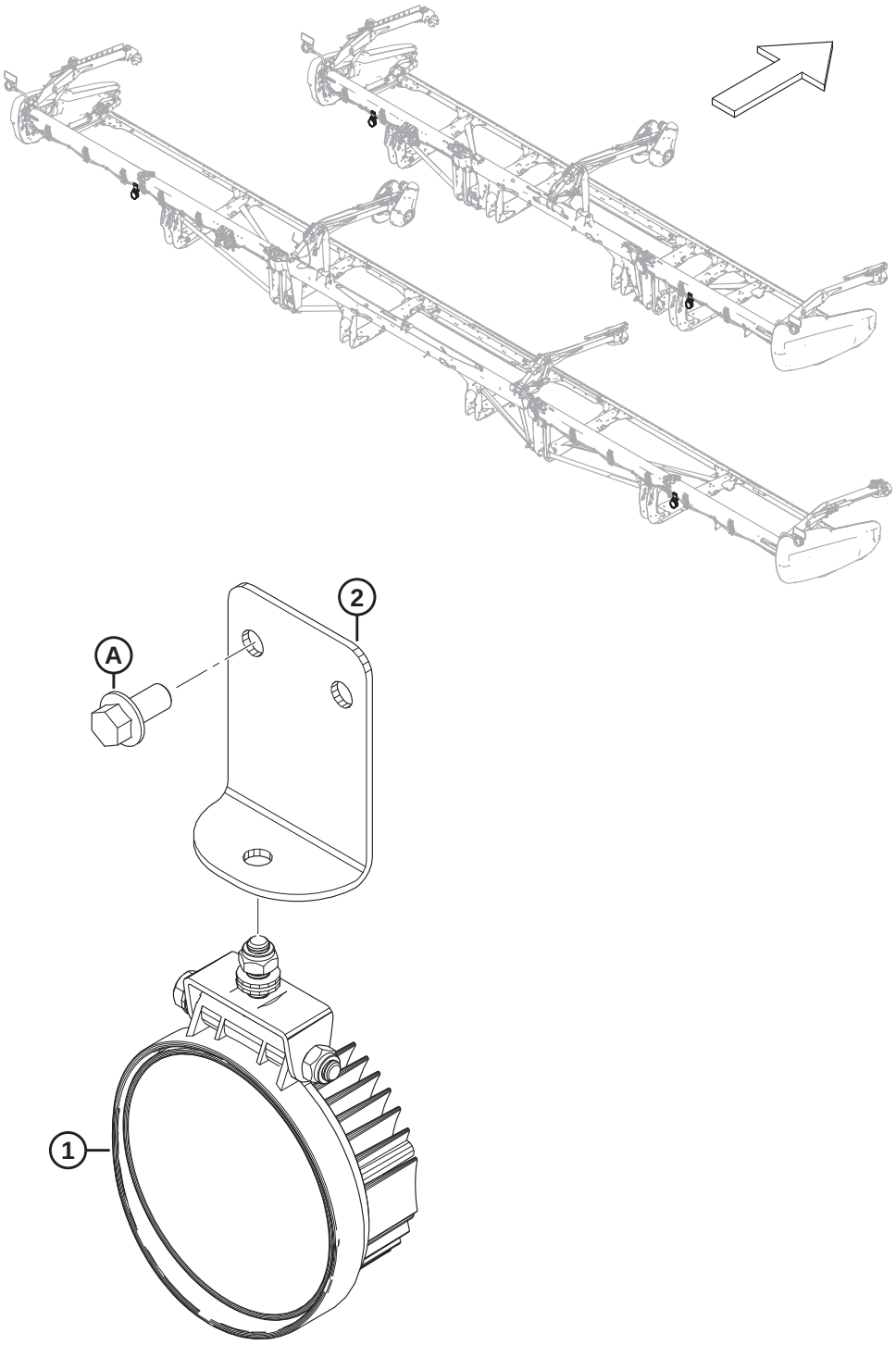

1032898

(OPTION) STUBBLE LIGHTS

Ref	Part Number	Description	Qty	Serial Number
	B7027	KIT – STUBBLE LIGHTS [373]		
1	258458	LIGHT	2	
2	258454	BRACKET – STUBBLE LIGHTS	2	
A	152655	BOLT – HEX FLG HD M10 X 1.5 X 20-8.8-AA1J		

373. Used only with John Deere combines. Kits are available through Whole Goods only.

141 (Option) Sunflower Attachment – Base Kit – Lean Bar and Deflectors

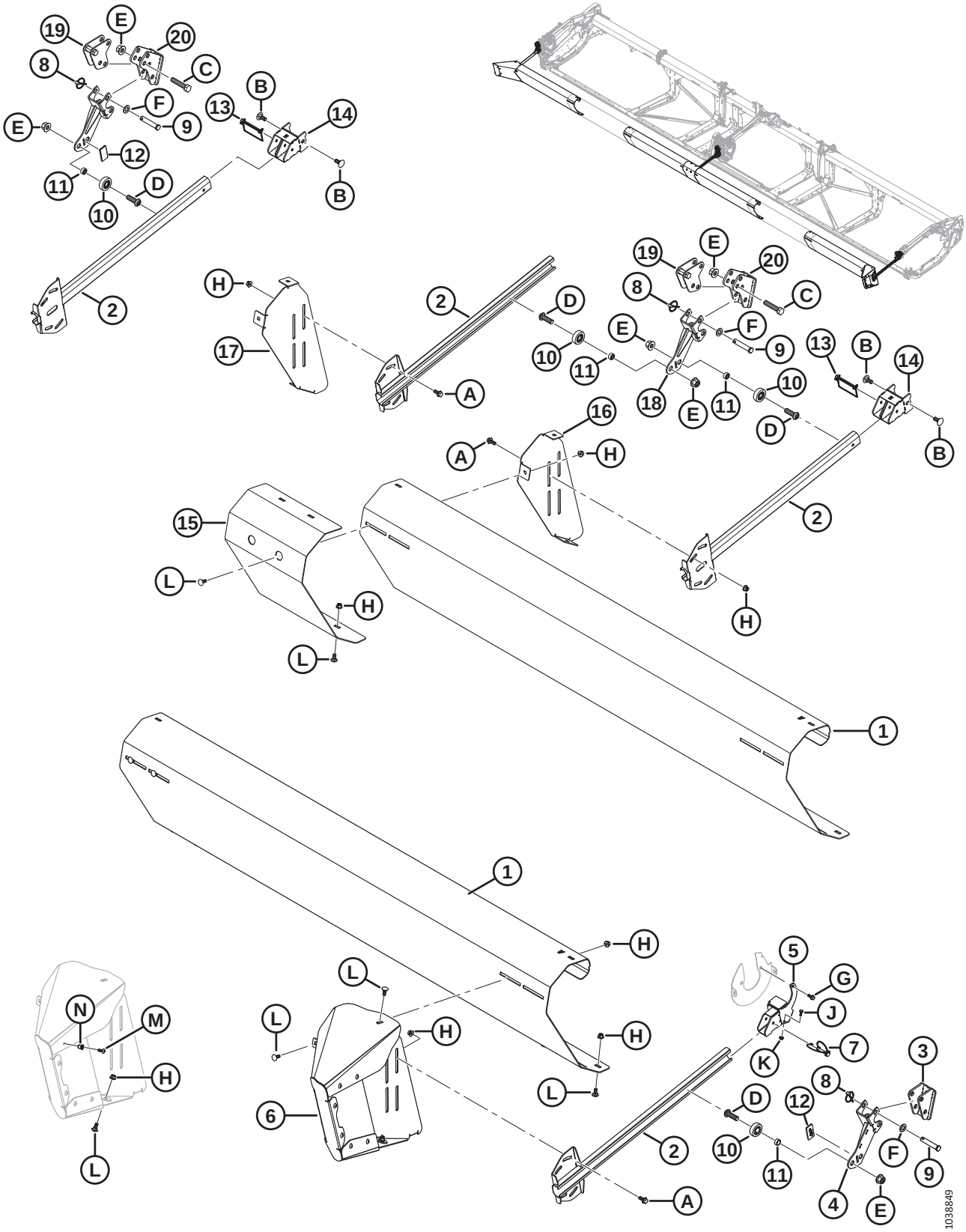

(OPTION) SUNFLOWER ATTACHMENT – BASE KIT – LEAN BAR AND DEFLECTORS

NOTE:

The Sunflower Attachment is compatible with pointed knife guards only.

Ref	Part Number	Description	Qty	Serial Number
	C2086	KIT – 30 FOOT SUNFLOWER ATTACHMENT [374]		
	C2087	KIT – 35 FOOT SUNFLOWER ATTACHMENT [374]		
	C2088	KIT – 40/41 FOOT SUNFLOWER ATTACHMENT (DOUBLE REEL) [374]		
	C2169	KIT – 40 FOOT SUNFLOWER ATTACHMENT (TRIPLE REEL) [374]		
	C2089	KIT – 45 FOOT SUNFLOWER ATTACHMENT [374]		
	C2170	KIT – 50 FOOT SUNFLOWER ATTACHMENT [374]		
	B7302	KIT – SUNFLOWER ATTACHMENT, BASE [375]		
1	119691	DEFLECTOR – LEAN BAR A [376]	4	
2	119757	ARM – PUSH BAR WELDT	4	
3	119593	SUPPORT – LEAN BAR WELDT	1	
4	119667	SUPPORT – LEAN BAR WELDT	1	
5	119666	BRACKET – HANGING WELDT	1	
6	119706	DEFLECTOR-EXTENSION ASSY – LH [377]	1	
	119705	DEFLECTOR-EXTENSION ASSY – RH [377]	1	
7	320205	PIN – LYNCH DIA 5/16 IN. X 1.75 IN. LG W/ TETHER	1	
8	102264	PIN – LYNCH 3/16 X 9/16 IN.	6	
9	18624	PIN – CLEVIS	6	
10	273524	BEARING – CAM FOLLOWER	4	
11	101095	SPACER	4	
12	273777	PAD – REEL DRIVE WEAR	2	
13	136749	PIN – LYNCH	2	
14	119738	BRACKET – WELDT	2	
15	119725	DEFLECTOR – LEAN BAR FILLER	1	
16	119696	BRACKET – LEAN BAR MOUNT, LH	1	
17	119697	BRACKET – LEAN BAR MOUNT, RH	1	
18	119672	SUPPORT – LEAN BAR WELDT	2	
19	119641	ANCHOR – FORE AFT SUBWELDT	2	
20	119623	SUPPORT – FRONT ANCHOR WELDT	2	
A	135783	BOLT – HEX FLG HD TFL M10 X 1.5 X 25-10.9-AA1J		
B	184667	BOLT – RHSN M12 X 1.75 X 30-8.8-ZINC		
C	181475	BOLT – HEX HD M16 X 2 X 75-8.8-BE0R		
D	320441	SCREW – HEX SOC BTN HD M16 X 2.0 X 50-10.9-AA1J		
E	136440	NUT – HEX FLG CTR LK M16 X 2-10-AA1J		

374. Kit contains base kit (MD #B7302), pans kit (MD #B7303), and deflectors kit (MD #B7304, B7305, B7306, B7395, B7307, or B7396). Kits are available through Whole Goods only.
375. Base kit B7302 includes all parts listed in this section and Section *142 (Option) Sunflower Attachment – Base Kit – Pans and Supports, page 337*. Kits are available through Whole Goods only.
376. Four deflectors (MD #119691) are included in the base kit. FD245 and FD250 headers require a total of six.
377. Includes eight Torx screws (MD #320190), eight rivnuts (MD #252179), one bolt (MD #135785), and one nut (MD #135799).

(OPTION) SUNFLOWER ATTACHMENT – BASE KIT – LEAN BAR AND DEFLECTORS

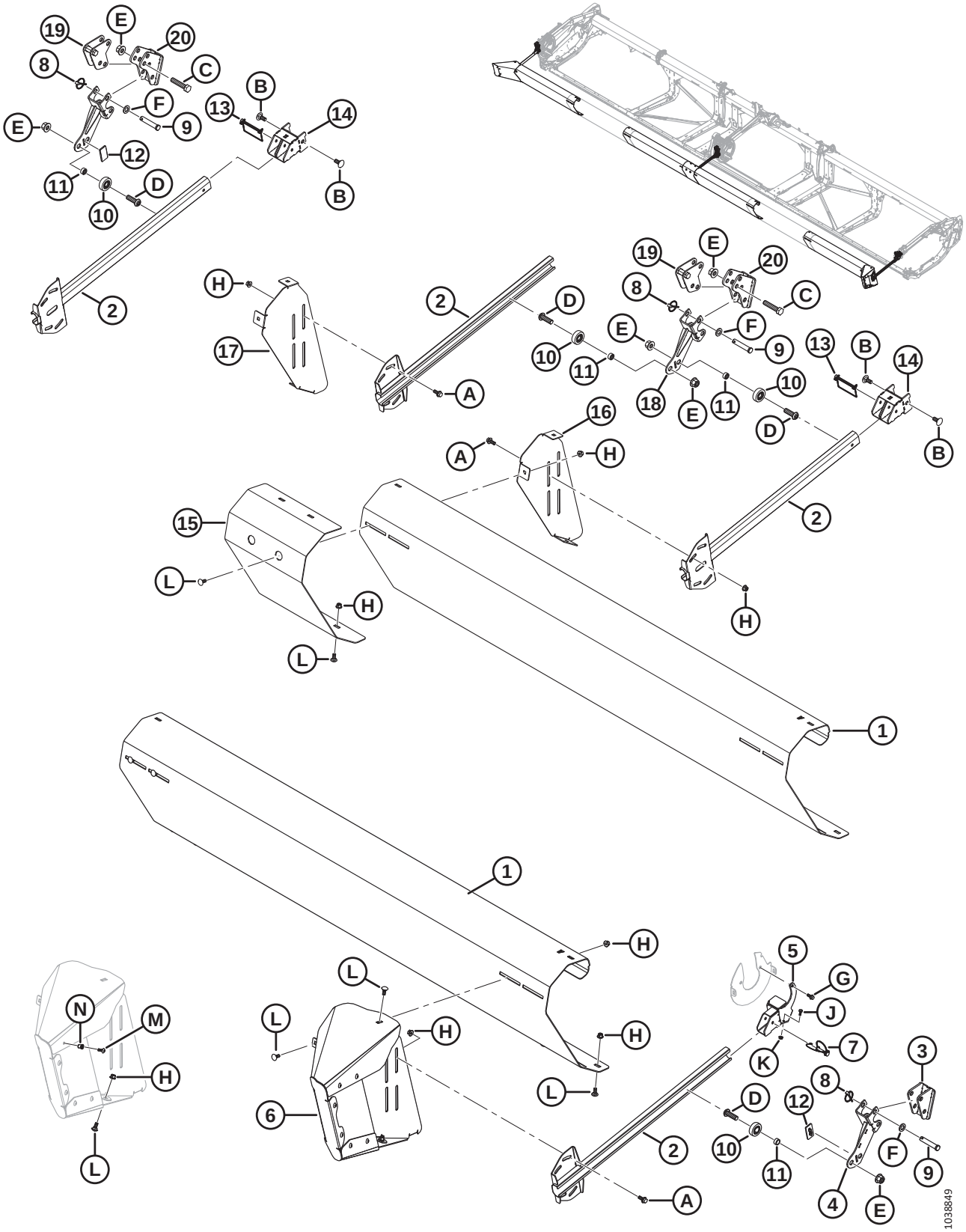

(OPTION) SUNFLOWER ATTACHMENT – BASE KIT – LEAN BAR AND DEFLECTORS

Ref	Part Number	Description	Qty	Serial Number
F	184717	WASHER – FLAT REG M16-200HV-AA1J		
G	136300	BOLT – HEX FLG HD TFL M8 X 1.25 X 20-8.8-AA3L		
H	135799	NUT – HEX FLG CTR LOC M10 X 1.5-10		
J	21572	BOLT – HEX HD 1/4 20 X 0.625 GR5 AA1J		
K	135248	NUT – HEX FLG CTR LOC		
L	135785	BOLT – RHSN M10 X 1.5 X 25-8.8-AA1J		
M	320190	SCREW – TORX TRUSS HD M8 X 1.25 X 20-SPCL-8.8-ZINC		
N	252179	RIVNUT – M8 X 1.25 HEX 0.7-3.8		

142 (Option) Sunflower Attachment – Base Kit – Pans and Supports

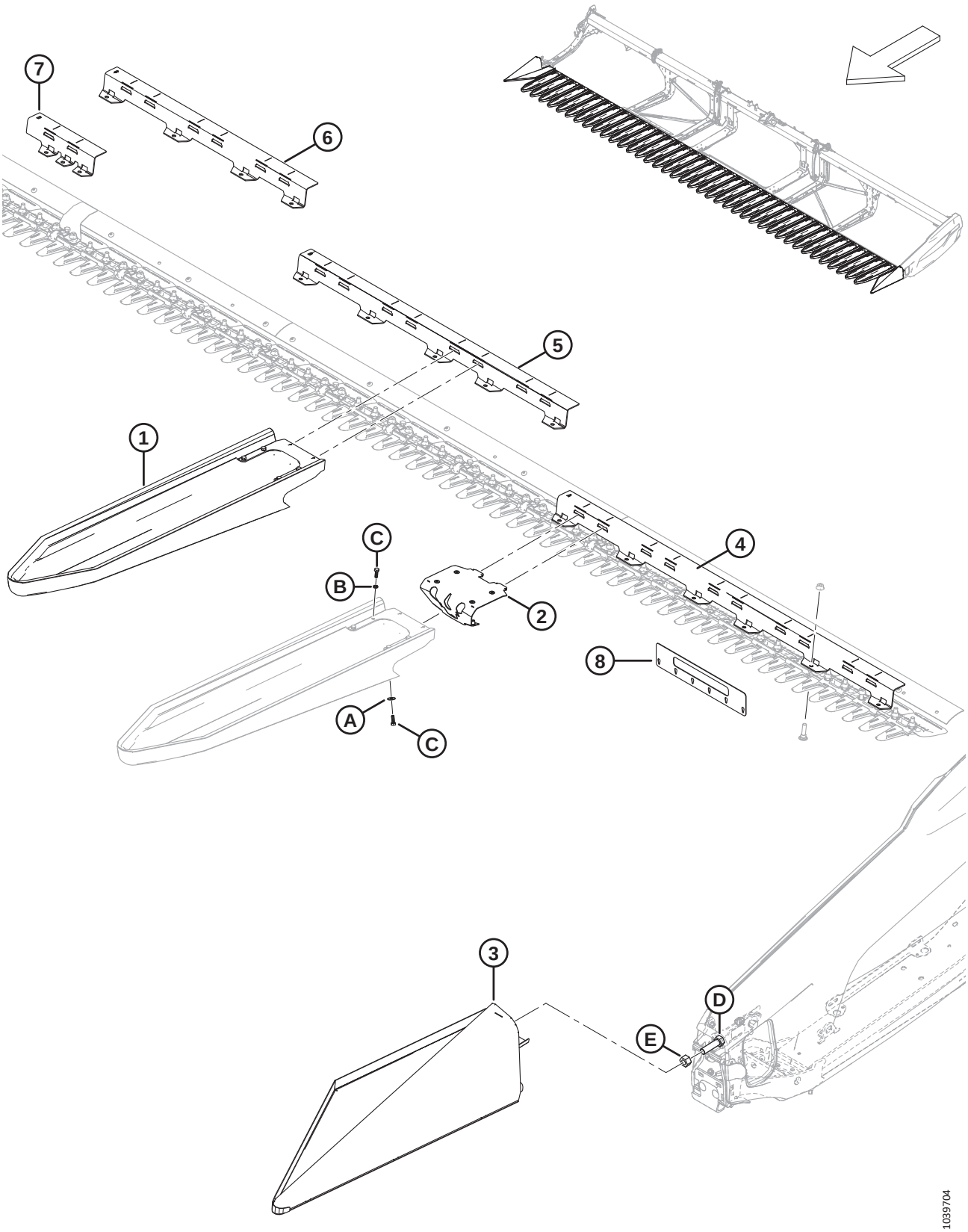

NOTE:

The Sunflower Attachment is compatible with pointed knife guards only.

Ref	Part Number	Description	Qty	Serial Number
	B7302	KIT – SUNFLOWER ATTACHMENT, BASE [378]		
1	119529	PAN – SUNFLOWER QUICK ATTACH [379]	5	
2	119726	ASSEMBLY – PAN LATCH [380]	5	
3	119560	PAN – END LH WELDT	1	
	119565	PAN – END RH WELDT	1	
4	119558	SUPPORT – PAN 5 FT A	2	
5	119653	SUPPORT – PAN 4 FT B	3	
6	119654	SUPPORT – PAN 3 FT C	4	
7	119655	SUPPORT – PAN HINGE D	1	
	119656	SUPPORT – PAN HINGE E	1	
8	119766	TOOL – GUARD TIP CHECK, 2 SERIES	1	
A	184709	WASHER – FLAT LARGE M8-200HV		
B	30716	WASHER – LOCK SPRING M8-CS-1055-1065-AA1J		
C	184652	BOLT – HEX HD TFL M8 X 1.25 X 25-8.8-AA1J		
D	**136339**	**BOLT – HEX HD FINE TFL M20 X 1.5 X 70 X 8.8-ZINC**		
E	**136342**	**NUT – HEX FINE M20 X 1.5 X 10-AA3L**		

378. Base kit B7302 includes all parts listed in this section and Section *141 (Option) Sunflower Attachment – Base Kit – Lean Bar and Deflectors, page 333*. Kits are available through Whole Goods only.
379. Includes latch assembly (MD #119726), clamp (NSS), six bolts (MD #184652), four lock spring washers (MD #30716), and two flat washers (MD #184709).
380. Includes six rivnuts (MD #252179).

143 (Option) Sunflower Attachment – Deflector Kits (Double Reel)

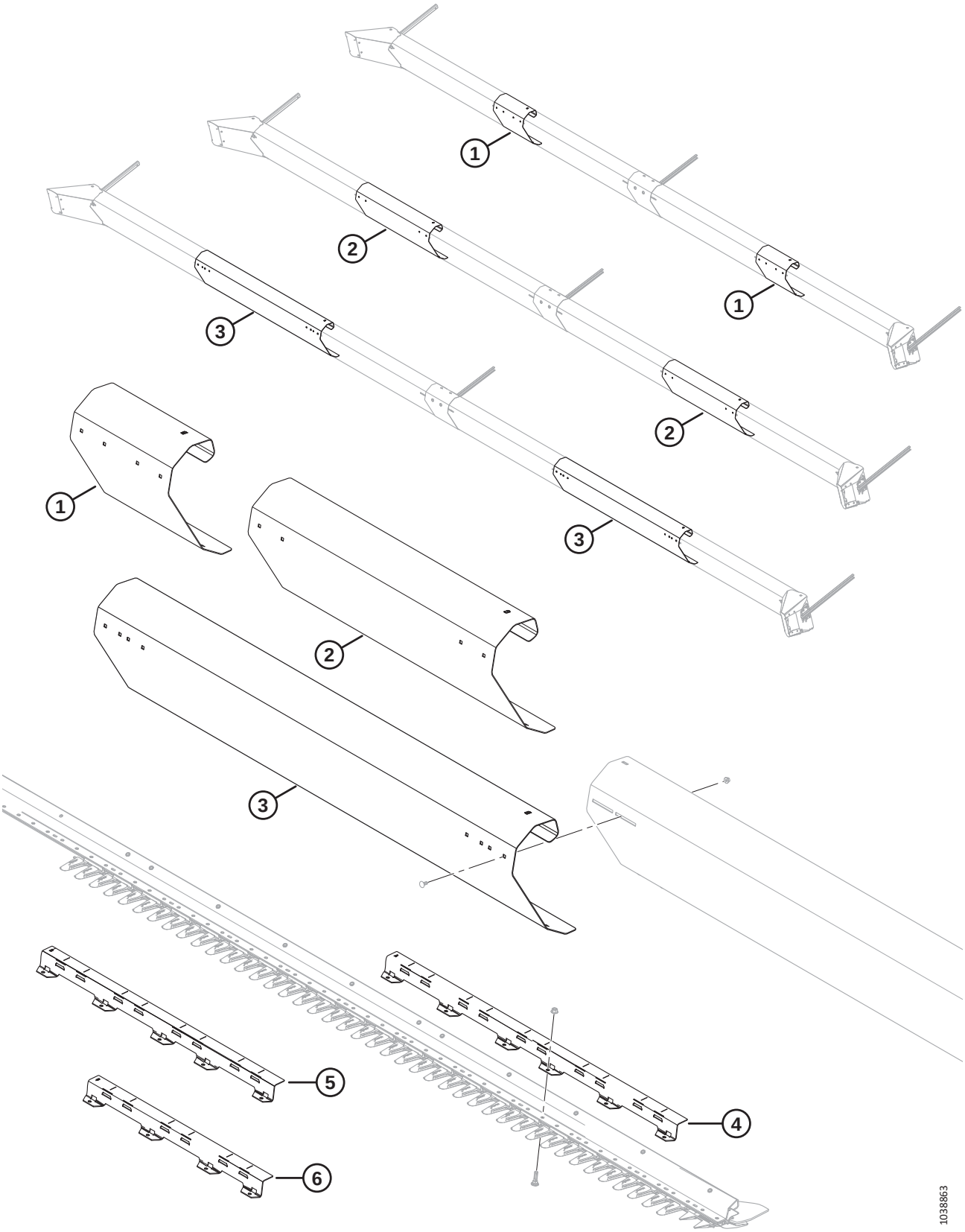

(OPTION) SUNFLOWER ATTACHMENT – DEFLECTOR KITS (DOUBLE REEL)

NOTE:

The Sunflower Attachment is compatible with pointed knife guards only.

Ref	Part Number	Description	Qty	Serial Number
	B7304	KIT – SUNFLOWER DEFLECTOR 30 FT [381]		
	B7305	KIT – SUNFLOWER DEFLECTOR 35 FT [381]		
	B7306	KIT – SUNFLOWER DEFLECTOR 40/41 FT DR [381]		
1	119692	DEFLECTOR – LEAN BAR B [382]	2	
2	119693	DEFLECTOR – LEAN BAR C [383]	2	
3	119694	DEFLECTOR – LEAN BAR D [384]	2	
4	119558	SUPPORT – PAN A (5 FT) [384]	2	
5	119653	SUPPORT – PAN B (4 FT) [384]	1	
6	119654	SUPPORT – PAN C (3 FT) [383]	3	

381. Kits are available through Whole Goods only.
382. Included in MD #B7304 (FD230 headers).
383. Included in MD #B7305 (FD235 headers).
384. Included in MD #B7306 (FD240/FD241 double-reel headers).

144 (Option) Sunflower Attachment – Deflector Kits (Triple Reel)

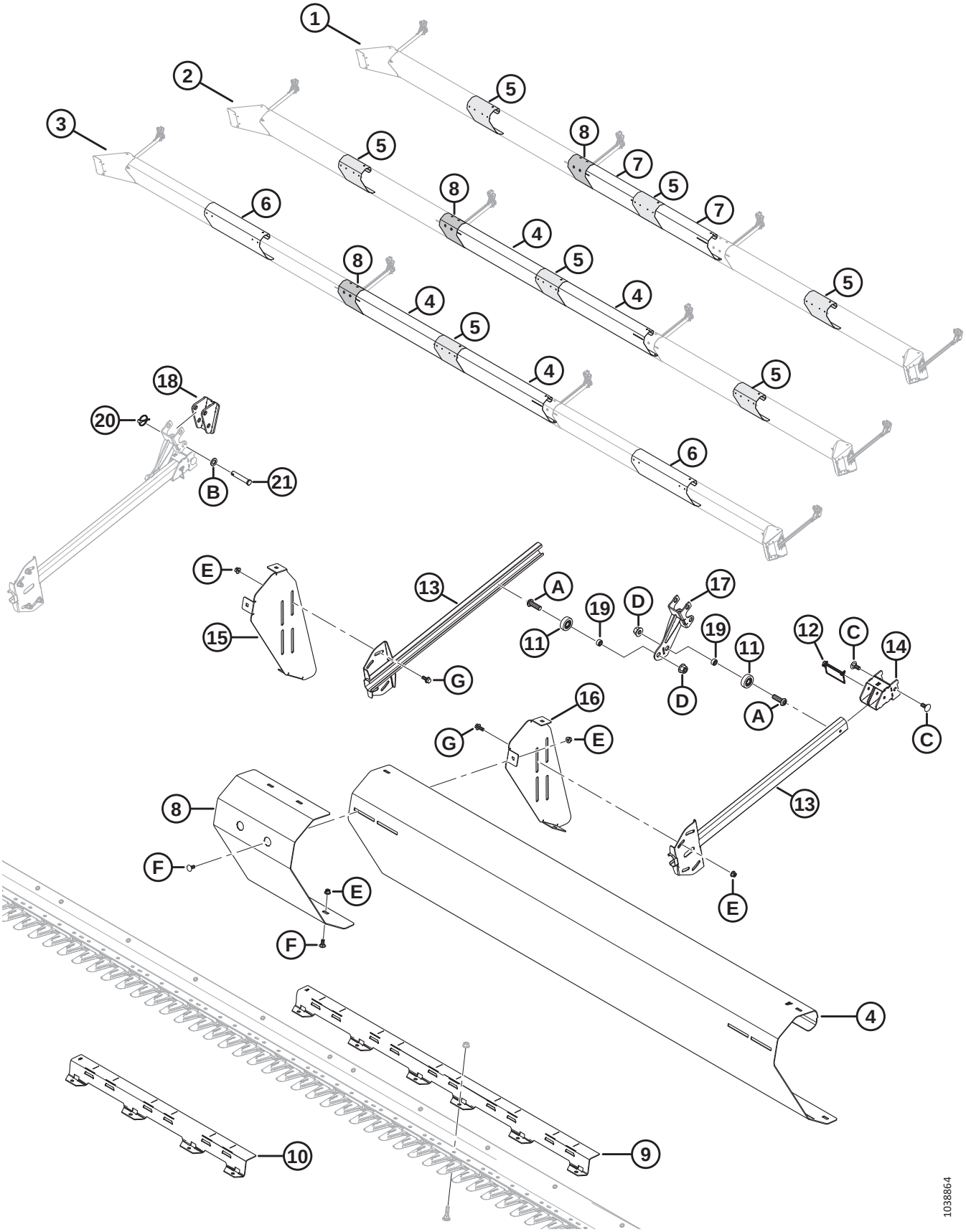

NOTE:

The Sunflower Attachment is compatible with pointed knife guards only.

Ref	Part Number	Description	Qty	Serial Number
	B7395	KIT – SUNFLOWER DEFLECTOR 40 FT TR [385]		
	B7307	KIT – SUNFLOWER DEFLECTOR 45 FT [385]		
	B7396	KIT – SUNFLOWER DEFLECTOR 50 FT [385]		
1	REF	FD240 TR CONFIGURATION		
2	REF	FD245 TR CONFIGURATION		
3	REF	FD250 TR CONFIGURATION		
4	119691	DEFLECTOR – LEAN BAR A [386]		
5	119692	DEFLECTOR – LEAN BAR B [387]		
6	119693	DEFLECTOR – LEAN BAR C [388]		
7	119745	DEFLECTOR – LEAN BAR E [389]		
8	119725	DEFLECTOR – LEAN BAR FILLER	1	
9	119558	SUPPORT – PAN A (5 FT) [390]		
10	119654	SUPPORT – PAN C (3 FT) [391]	3	
11	273524	BEARING – CAM FOLLOWER	2	
12	136749	PIN – LYNCH	1	
13	119757	ARM – PUSH BAR WELDT	2	
14	119738	BRACKET – WELDT	1	
15	119697	BRACKET – LEAN BAR MOUNT RH	1	
16	119696	BRACKET – LEAN BAR MOUNT LH	1	
17	119672	SUPPORT – LEAN BAR WELDT	1	
18	119593	SUPPORT – LEAN BAR WELDT	1	
19	101095	SPACER	2	
20	102264	PIN – LYNCH 3/16 X 1 9/16 IN.	2	
21	18624	PIN – CLEVIS	2	
A	320441	SCREW – HEX SOC BTN HD M16 X 2.0 X 50-10.9-AA1J		
B	184717	WASHER – FLAT REG M16-200HV-AA1J		
C	184667	BOLT – RHSN M12 X 1.75 X 30-8.8-ZINC		
D	136440	NUT – HEX FLG CTR LK M16 X 2-10-AA1J		
E	135799	NUT – HEX FLG CTR LOC M10 X 1.5-10		
F	135785	BOLT – RHSN M10 X 1.5 X 25-8.8-AA1J		
G	135783	BOLT – HEX FLG HD TFL M10 X 1.5 X 25-10.9-AA1J		

385. Kits are available through Whole Goods only.
386. Quantities: MD #B7307 (FD245 headers) = 2; MD #B7396 (FD250 headers) = 2.
387. Quantities: MD #B7395 (FD240 headers) = 3; MD #B7307 (FD245 headers) = 3; MD #B7396 (FD250 headers) = 1.
388. Quantities: MD #B7396 (FD250 headers) = 2.
389. Quantities: MD #B7395 (FD240 headers) = 2.
390. Quantities: MD #B7395 (FD240 headers) = 2; MD #B7307 (FD245 headers) = 2; MD #B7396 (FD250 headers) = 4.
391. Quantities: MD #B7307 (FD245 headers) = 3.

145 (Option) Sunflower Attachment – Pans

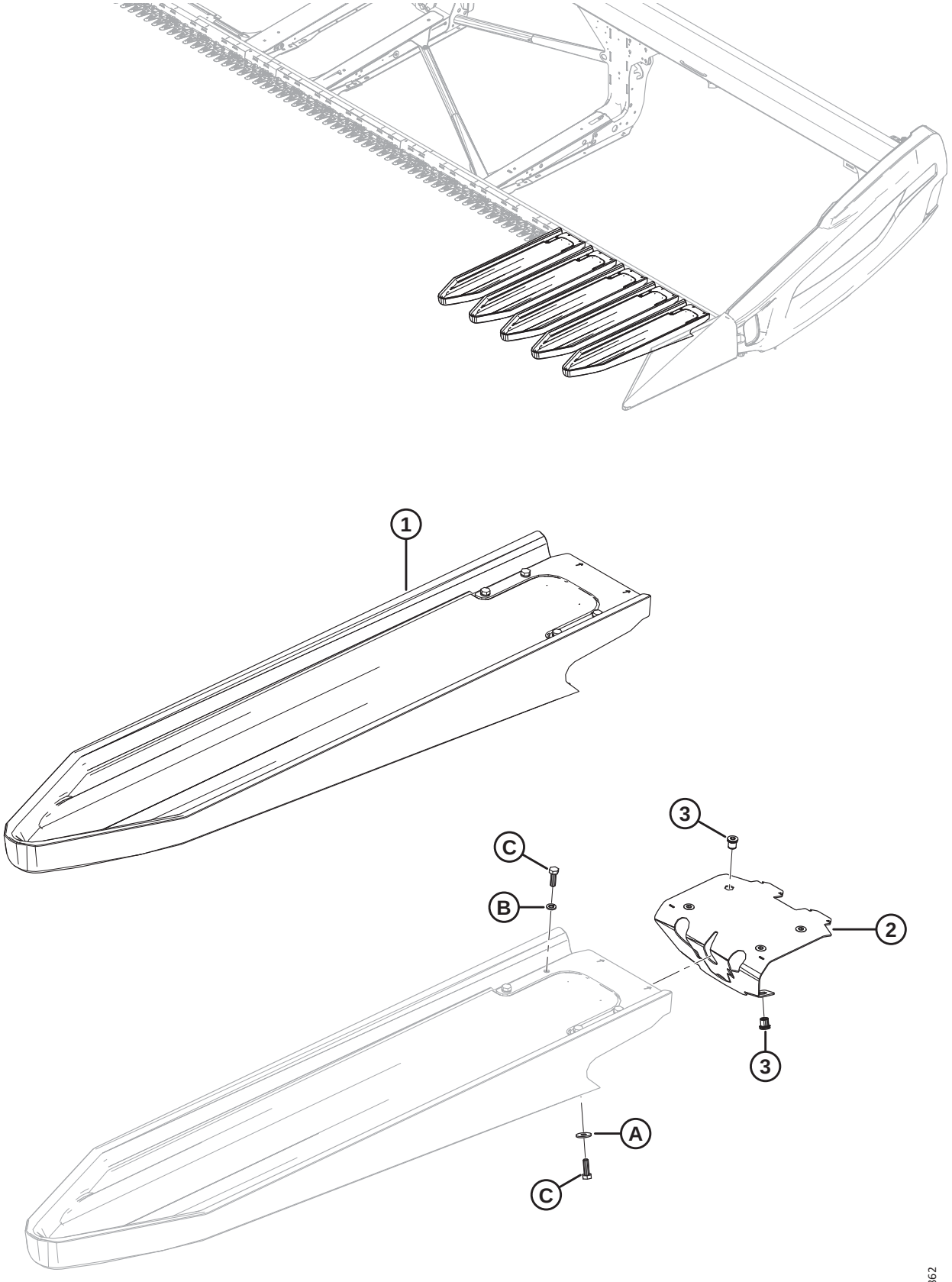

(OPTION) SUNFLOWER ATTACHMENT – PANS

NOTE:

The Sunflower Attachment is compatible with pointed knife guards only.

Ref	Part Number	Description	Qty	Serial Number
	B7303	KIT – 2 SERIES SUNFLOWER PAN (5 PANS) [392]		
	119737	KIT – 2 SERIES SUNFLOWER PAN (5 PANS)		
1	119529	PAN – SUNFLOWER QUICK ATTACH [393]	5	
2	119726	ASSEMBLY – PAN LATCH [394]	5	
3	252179	RIVNUT – M8 X 1.25 HEX0.7-3.8	30	
A	184709	WASHER – FLAT LARGE M8-200HV		
B	30716	WASHER – LOCK SPRING M8-CS-1055-1065-AA1J		
C	184652	BOLT – HEX HD TFL M8 X 1.25 X 25-8.8-AA1J		

392. Kit contains 5 pans. Base kit (MD #B7302) contains pans for FD230 header. FD235 requires 1 pan kit, FD240/FD241 requires 2 pan kits, FD245 requires 3 pan kits, and FD250 requires 4 pan kits. Kits are available through Whole Goods only.
393. Includes latch assembly (MD #119726), clamp (NSS), six bolts (MD #184652), four lock spring washers (MD #30716), and two flat washers (MD #184709).
394. Includes six rivnuts (MD #252179).

146 (Option) Upper Cross Auger – Two-Piece Auger (FD225, FD230, FD235, and FD241)

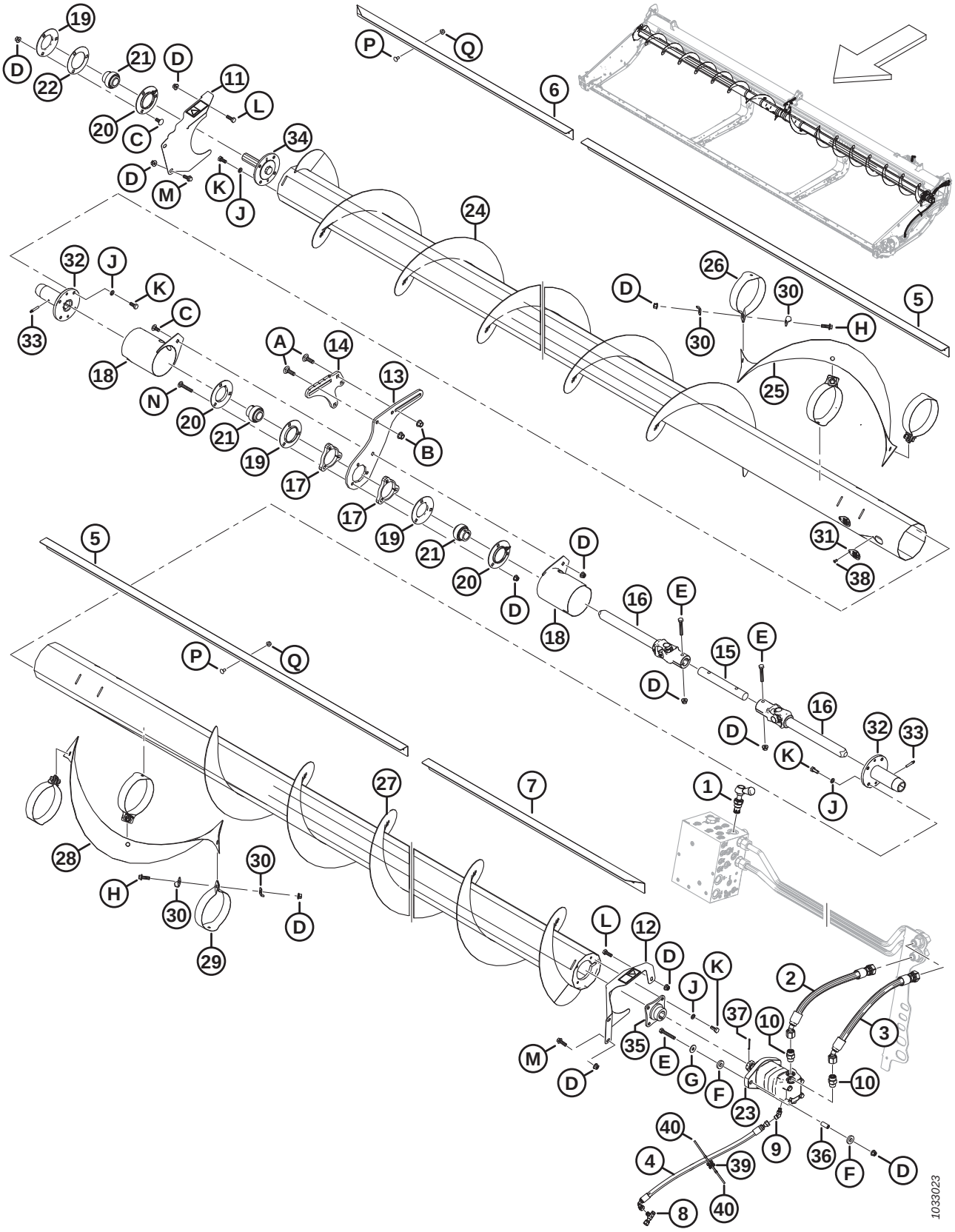

(OPTION) UPPER CROSS AUGER – TWO-PIECE AUGER (FD225, FD230, FD235, AND FD241)

Ref	Part Number	Description	Qty	Serial Number
	B6413	**KIT – FD225 UPPER CROSS AUGER** [395]		
	B6414	KIT – FD230 UPPER CROSS AUGER [395]		
	B6415	KIT – FD235 UPPER CROSS AUGER [395]		
	B6416	KIT – FD241 UPPER CROSS AUGER [395]		
1	283571	VALVE – BYPASS	1	
	245158	SEAL KIT		
2	283061	HOSE – HYD	1	
3	283062	HOSE – HYD	1	
4	283077	HOSE – HYD	1	
5	275521	DEFLECTOR – INBOARD 30, 35, AND 41 FT [396]	2	
6	**275530**	**DEFLECTOR – 25 FT**	**1**	
	275533	DEFLECTOR – RH OUTBOARD 30 FT	1	
	275543	DEFLECTOR – RH OUTBOARD 35 FT	1	
	275614	DEFLECTOR – RH OUTBOARD 41 FT	1	
7	**275530**	**DEFLECTOR – 25 FT**	**1**	
	275532	DEFLECTOR – LH OUTBOARD 30 FT	1	
	275542	DEFLECTOR – LH OUTBOARD 35 FT	1	
	275524	DEFLECTOR – LH OUTBOARD 41 FT	1	
8	252621	FITTING – TEE HYD	1	
	135957	O-RING – Ø1.78 X Ø7.65		
9	252307	FITTING – ELBOW 45° HYD	1	
	50223	O-RING – Ø1.83 X Ø8.92		
	135957	O-RING – Ø1.78 X Ø7.65		
10	184461	FITTING – ADAPTER HYD	2	
	44210	O-RING – Ø2.46 X Ø19.18		
	135867	O-RING – Ø1.78 X Ø15.60		
11	233725	SHIELD – ASSEMBLY RH C/W DECAL	1	
12	233724	SHIELD – ASSEMBLY LH C/W DECAL	1	
13	233738	PLATE – SUPPORT, CENTER SLIDING	1	
14	233736	PLATE – SUPPORT, CENTER FIXED	1	
15	233519	SHAFT	1	
16	233513	JOINT – UNIVERSAL	2	
17	233450	PLATE – SPACER	2	
18	233371	GUARD – WELDT	2	
19	49306	FLANGE	3	
20	30661	FLANGE	3	
21	21859	BEARING – SPH OD EXT INNER RACE 1 3/16 BORE	3	
22	172340	SHIM	1	
23	283555	MOTOR – HYD-100 CC SAE B	1	
	174304	SEAL KIT – EATON 2000 MOTOR		
	137375	NUT – SLTD JAM 1.0-20 UNEF		

395. Kits are available through Whole Goods only.
396. Inboard deflectors (MD #275521) are not used on FD225 headers.

(OPTION) UPPER CROSS AUGER – TWO-PIECE AUGER (FD225, FD230, FD235, AND FD241)

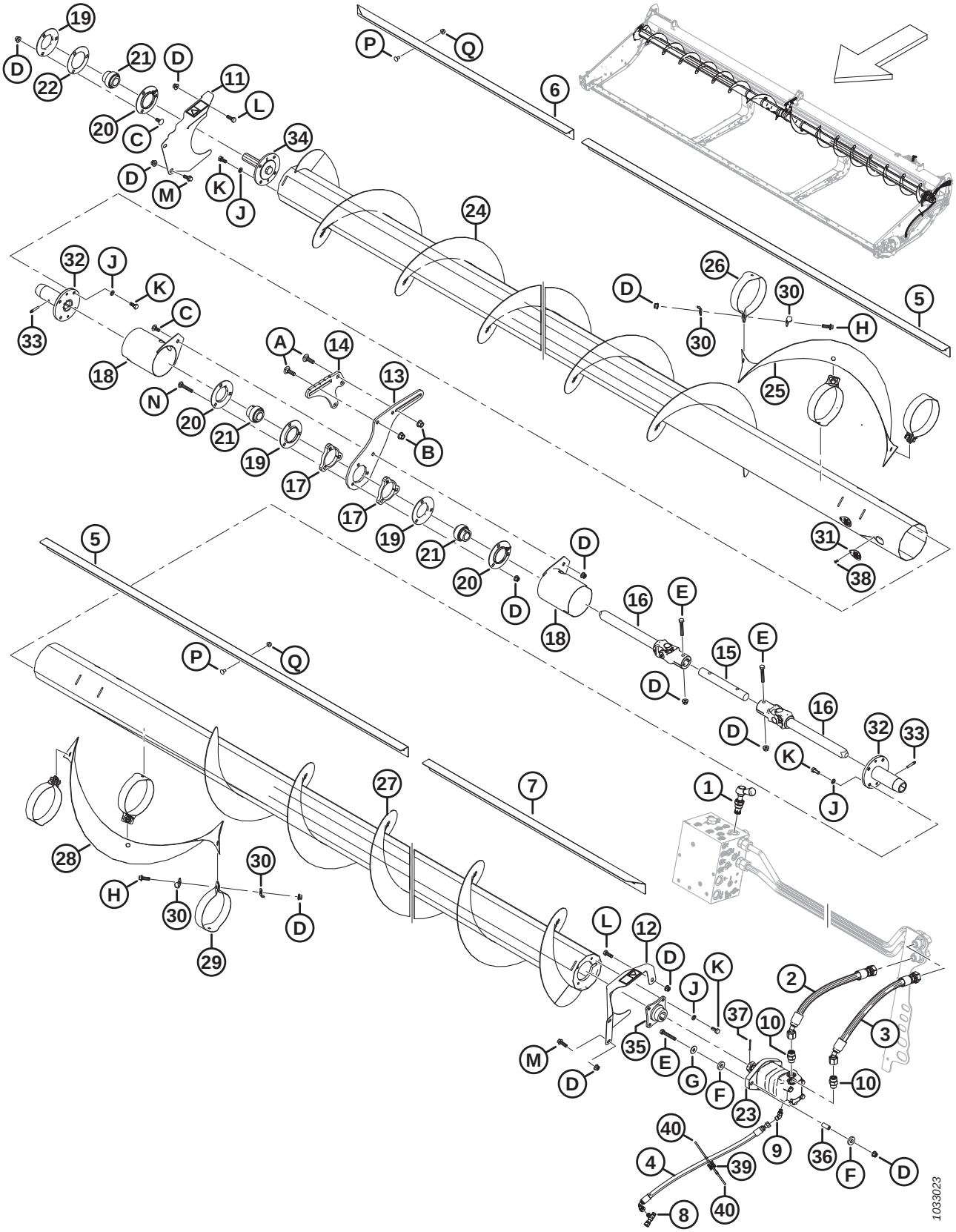

(OPTION) UPPER CROSS AUGER – TWO-PIECE AUGER (FD225, FD230, FD235, AND FD241)

Ref	Part Number	Description	Qty	Serial Number
24	**233654**	**AUGER – WELDT RH (FD225)**	**1**	
	233656	AUGER – WELDT RH (FD230)	1	
	233658	AUGER – WELDT RH (FD235)	1	
	233660	AUGER – WELDT RH (FD241)	1	
25	233705	FLIGHTING – RH	1	
26	233621	STRAP – RH	3	
27	**233655**	**AUGER – WELDT LH (FD225)**	**1**	
	233657	AUGER – WELDT LH (FD230)	1	
	233659	AUGER – WELDT LH (FD235)	1	
	233661	AUGER – WELDT LH (FD241)	1	
28	233706	FLIGHTING – LH	1	
29	233622	STRAP – LH	3	
30	233623	PLATE	12	
31	233625	COVER	4	
32	233514	HUB – WELDT UCA SLIDING	2	
33	30934	FITTING – 1/4-28 TAPER THD (LUBRICATION)	2	
34	233447	HUB – MACHINED	1	
35	233443	HUB – WELDT, UCA 1.25 TAPER SFAFT	1	
36	233445	SPACER	2	
37	18606	PIN – COTTER 1/8 DIA X 1.5 ZP	1	
38	18768	RIVET – BLIND Ø0.188 IN. X 0.251 TO 0.375 GRIP RANGE	4	
39	134442	SPACER – DUAL SWIVEL SADDLE	1	
40	21763	FASTENER – CABLE TIE, BLACK	2	
A	135900	BOLT – RHSN TFL M12 X 1.75 X 40-8.8-ZINC		
B	136431	NUT – HEX FLG CTR LOC M12 X 1.75-10		
C	135785	BOLT – RHSN M10 X 1.5 X 25-8.8-AA1J		
D	135799	NUT – HEX FLG CTR LOC M10 X 1.5-10		
E	108172	BOLT – HEX HD M10 X 1.5 X 65-8.8-AA1J		
F	233446	WASHER – RUBBER		
G	184712	WASHER – FLAT LARGE M10-200HV		
H	184665	BOLT – HEX FLG HD M10 X 1.5 X 30-10.9-AA1J		
J	30632	WASHER – LOCK SPRING M10		
K	30627	BOLT – HEX HD TFL M10 X 1.5 X 25-8.8-A3L		
L	184661	BOLT – HEX HD TFL M10 X 1.5 X 30-8.8-AA1J		
M	184665	BOLT – HEX FLG HD M10 X 1.5 X 30-10.9-AA1J		
N	136113	BOLT – RHSN M10 X 1.5 X 60-8.8-AA1J		
P	191489	BOLT – RHSSN TFL M8 X 1.25 X 16-8.8-AA1J		
Q	135337	NUT – HEX FLG CTR LK M8 X 1.25-8-AA1J		

147 (Option) Upper Cross Auger – Three-Piece Auger (FD240, FD245, and FD250)

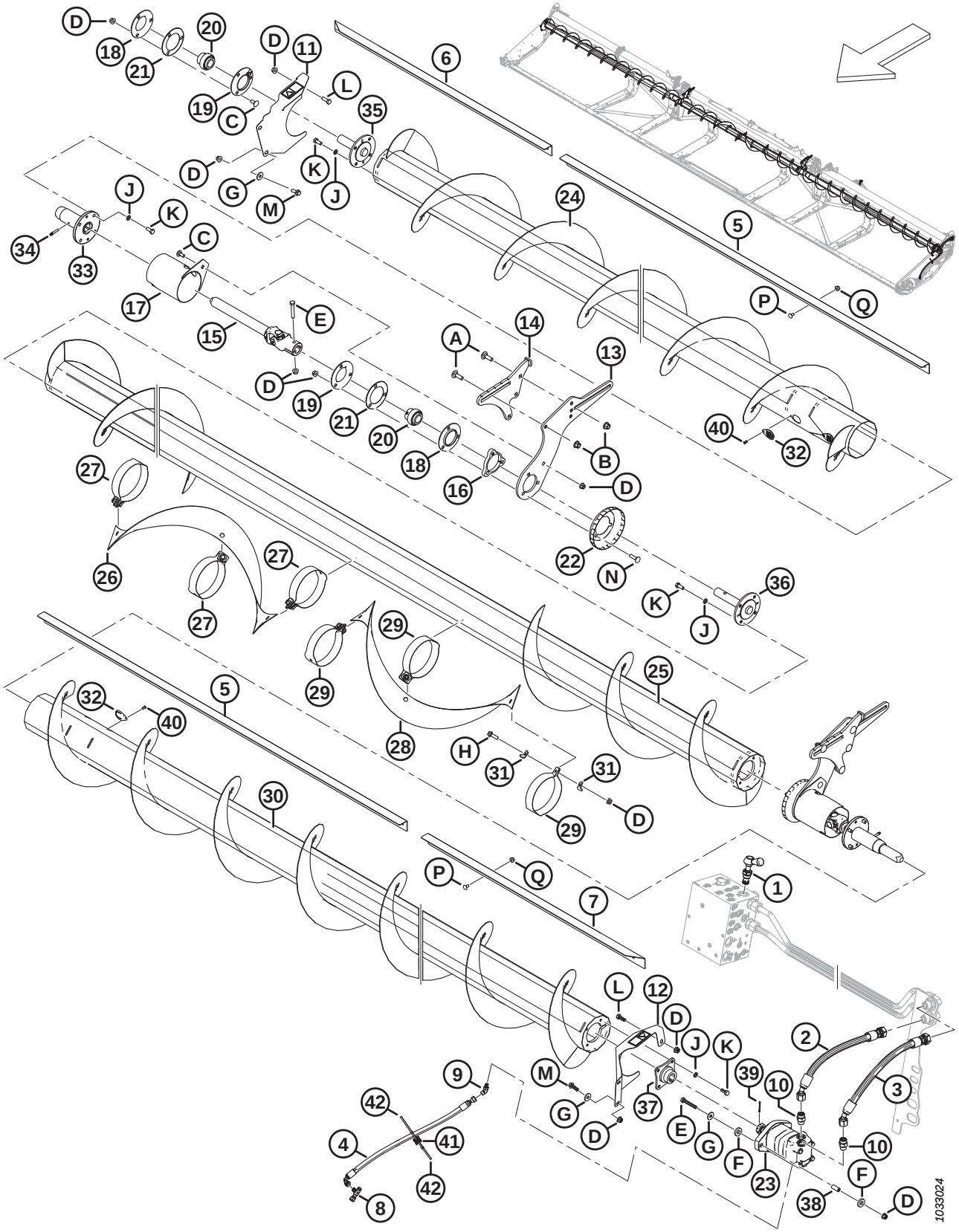

(OPTION) UPPER CROSS AUGER – THREE-PIECE AUGER (FD240, FD245, AND FD250)

Ref	Part Number	Description	Qty	Serial Number
	B6417	KIT – FD240 UPPER CROSS AUGER [397]		
	B6418	KIT – FD245 UPPER CROSS AUGER [397]		
	B6419	KIT – FD250 UPPER CROSS AUGER [397]		
1	283571	VALVE – BYPASS	1	
	245158	SEAL KIT		
2	283061	HOSE – HYD	1	
3	283062	HOSE – HYD	1	
4	283077	HOSE – HYD	1	
5	275521	DEFLECTOR – INBOARD 40 FT	2	
	275692	DEFLECTOR – INBOARD 45 AND 50 FT	2	
6	275625	DEFLECTOR – RH OUTBOARD 40 AND 50 FT	1	
	275543	DEFLECTOR – RH OUTBOARD 45 FT	1	
7	275624	DEFLECTOR – LH OUTBOARD 40 AND 50 FT	1	
	275542	DEFLECTOR – LH OUTBOARD 45 FT	1	
8	252621	FITTING – TEE HYD	1	
	135957	O-RING – Ø1.78 X Ø7.65		
9	252307	FITTING – ELBOW 45° HYD	1	
	50223	O-RING – Ø1.83 X Ø8.92		
	135957	O-RING – Ø1.78 X Ø7.65		
10	184461	FITTING – ADAPTER HYD	2	
	44210	O-RING – Ø2.46 X Ø19.18		
	135867	O-RING – Ø1.78 X Ø15.60		
11	233725	SHIELD – ASSEMBLY RH C/W DECAL	1	
12	233724	SHIELD – ASSEMBLY LH C/W DECAL	1	
13	233741	PLATE – SUPPORT, CENTER SLIDING	2	
14	233740	SUPPORT – WELDMENT, CENTER FIXED	2	
15	233513	JOINT – UNIVERSAL	2	
16	233450	PLATE – SPACER	2	
17	233371	GUARD – WELDT	2	
18	49306	FLANGE	2	
19	30661	FLANGE	2	
20	21859	BEARING – SPH OD EXT INNER RACE 1 3/16 BORE	3	
21	172340	SHIM	2	
22	233552	SHIELD – FORMED	2	
23	283555	MOTOR – HYD-100 CC SAE B	1	
	174304	SEAL KIT – EATON 2000 MOTOR		
	137375	NUT – SLTD JAM 1.0-20 UNEF		
24	233662	AUGER – WELDT RH (FD240 AND FD245)	1	
	233664	AUGER – WELDT RH (FD250)	1	
25	233668	AUGER – WELDT CENTER	1	
	233669	AUGER – WELDT CENTER (FD245 AND FD250)	1	
26	233705	FLIGHTING – RH	1	

397. Kits are available through Whole Goods only.

(OPTION) UPPER CROSS AUGER – THREE-PIECE AUGER (FD240, FD245, AND FD250)

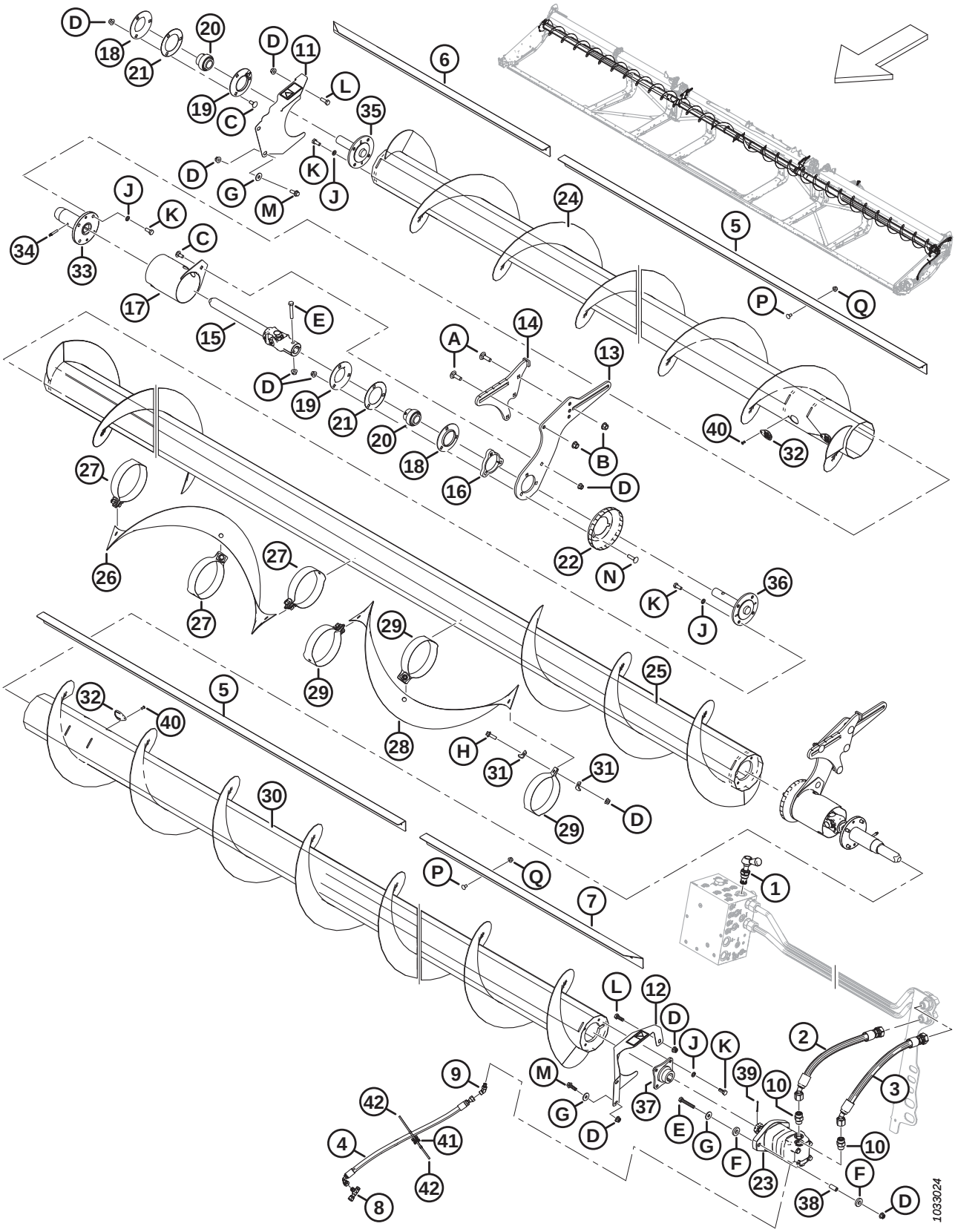

(OPTION) UPPER CROSS AUGER – THREE-PIECE AUGER (FD240, FD245, AND FD250)

Ref	Part Number	Description	Qty	Serial Number
27	233621	STRAP – RH	3	
28	233706	FLIGHTING – LH	1	
29	233622	STRAP – LH	3	
30	233663	AUGER – WELDT LH (FD240 AND FD245)	1	
	233665	AUGER – WELDT LH (FD250)	1	
31	233623	PLATE	12	
32	233625	COVER	4	
33	233514	HUB – WELDT, UCA SLIDING	2	
34	30934	FITTING – 1/4-28 TAPER THD (LUBRICATION)	2	
35	233447	HUB – MACHINED, UCA IDLE END	1	
36	233516	HUB – MACHINED, UCA CENTER	2	
37	233443	HUB – WELDT, UCA 1.25 TAPER SFAFT	1	
38	233445	SPACER	2	
39	18606	PIN – COTTER 1/8 DIA X 1.5 ZP	1	
40	18768	RIVET – BLIND Ø0.188 IN. X 0.251 TO 0.375 GRIP RANGE	4	
41	134442	SPACER – DUAL SWIVEL SADDLE	1	
42	21763	FASTENER – CABLE TIE, BLACK	2	
A	135900	BOLT – RHSN TFL M12 X 1.75 X 40-8.8-ZINC		
B	136431	NUT – HEX FLG CTR LOC M12 X 1.75-10		
C	135785	BOLT – RHSN M10 X 1.5 X 25-8.8-AA1J		
D	135799	NUT – HEX FLG CTR LOC M10 X 1.5-10		
E	108172	BOLT – HEX HD M10 X 1.5 X 65-8.8-AA1J		
F	233446	WASHER – RUBBER		
G	184712	WASHER – FLAT LARGE M10-200HV		
H	184665	BOLT – HEX FLG HD M10 X 1.5 X 30-10.9-AA1J		
J	30632	WASHER – LOCK SPRING M10		
K	30627	BOLT – HEX HD TFL M10 X 1.5 X 25-8.8-A3L		
L	184661	BOLT – HEX HD TFL M10 X 1.5 X 30-8.8-AA1J		
M	184665	BOLT – HEX FLG HD M10 X 1.5 X 30-10.9-AA1J		
N	152732	BOLT – RHSN M10 X 1.5 X 40-8.8-AA1J		
P	191489	BOLT – RHSSN TFL M8 X 1.25 X 16-8.8-AA1J		
Q	135337	NUT – HEX FLG CTR LK M8 X 1.25-8-AA1J		

148 (Option) VertiBlade™ Vertical Knife Kit

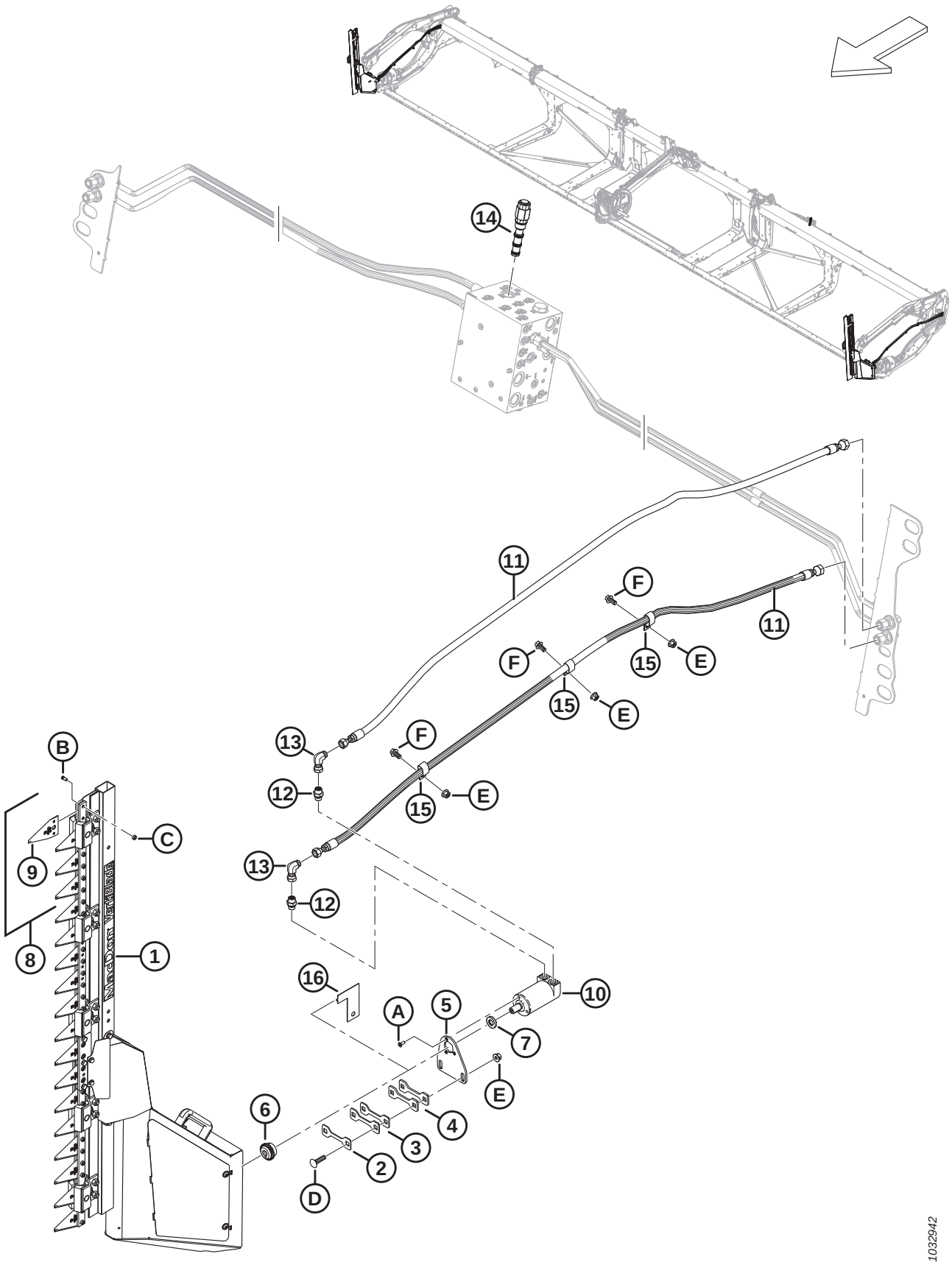

(OPTION) VERTIBLADE™ VERTICAL KNIFE KIT

Ref	Part Number	Description	Qty	Serial Number
	B7029	KIT – VERTIBLADE VERTICAL KNIVES [398]		
1	313502	KNIFE – VERTICAL ASSEMBLY, RH [399]	1	
	313501	KNIFE – VERTICAL ASSEMBLY, LH [399]	1	
2	313750	SHIM – 2 MM THK	A/R	
3	313749	SHIM – 3 MM THK	A/R	
4	313745	SHIM – 4.5 MM THK	A/R	
5	313744	SUPPORT – MOTOR VERTICAL KNIFE	2	
6	313808	HUB	2	
7	313801	SPACER	2	
8	313797	KIT – VERTICAL KNIFE SECTIONS [400]	A/R	
9	313788	SECTION – VERTICAL KNIFE	A/R	
10	304611	MOTOR – HYDRAULIC	2	
11	283066	HOSE – HYD	4	
12	136653	FITTING – ADAPTER	4	
	135865	O-RING – Ø1.78 X Ø9.25		
	136654	O-RING – 1.50 X 2.10 X14.70		
13	136249	FITTING – ELBOW 90° HYD	4	
14	283008	VALVE – PRIORITY FLOW REG (FRRV)	1	
	283579	SEAL KIT		
15	135235	CLAMP – DOUBLE HOSE INSULATED	6	
16	313780	GUIDE – VERTICAL KNIFE [401]	1	
A	320220	SCREW – TORX CSK HD TFL M6 X 1 X 16-SPCL-8.8-ZINC		
B	313789	SCREW – VERTICAL KNIFE SECTION		
C	313790	NUT – VERTICAL KNIFE SECTION		
D	152732	BOLT – RHSN M10 X 1.5 X 40-8.8-AA1J		
E	135799	NUT – HEX FLG CTR LOC M10 X 1.5-10		
F	152655	BOLT – HEX FLG HD M10 X 1.5 X 20-8.8-AA1J		

398. Kits are available through Whole Goods only.
399. For vertical knife components, refer to Section *149 (Option) VertiBlade™ Vertical Knife Components, page 355*.
400. The kit includes four vertical knife sections (MD #313788), eight vertical knife section screws (MD #313789), and eight vertical knife section nuts (MD #313790).
401. The guide is used as a tool to determine the correct number of shims (MD #313750, MD #313749, and MD #313745) required to fill the gap between the frame plate and guide. The guide is removed after determining gap. See installation instructions for more details.

149 (Option) VertiBlade™ Vertical Knife Components

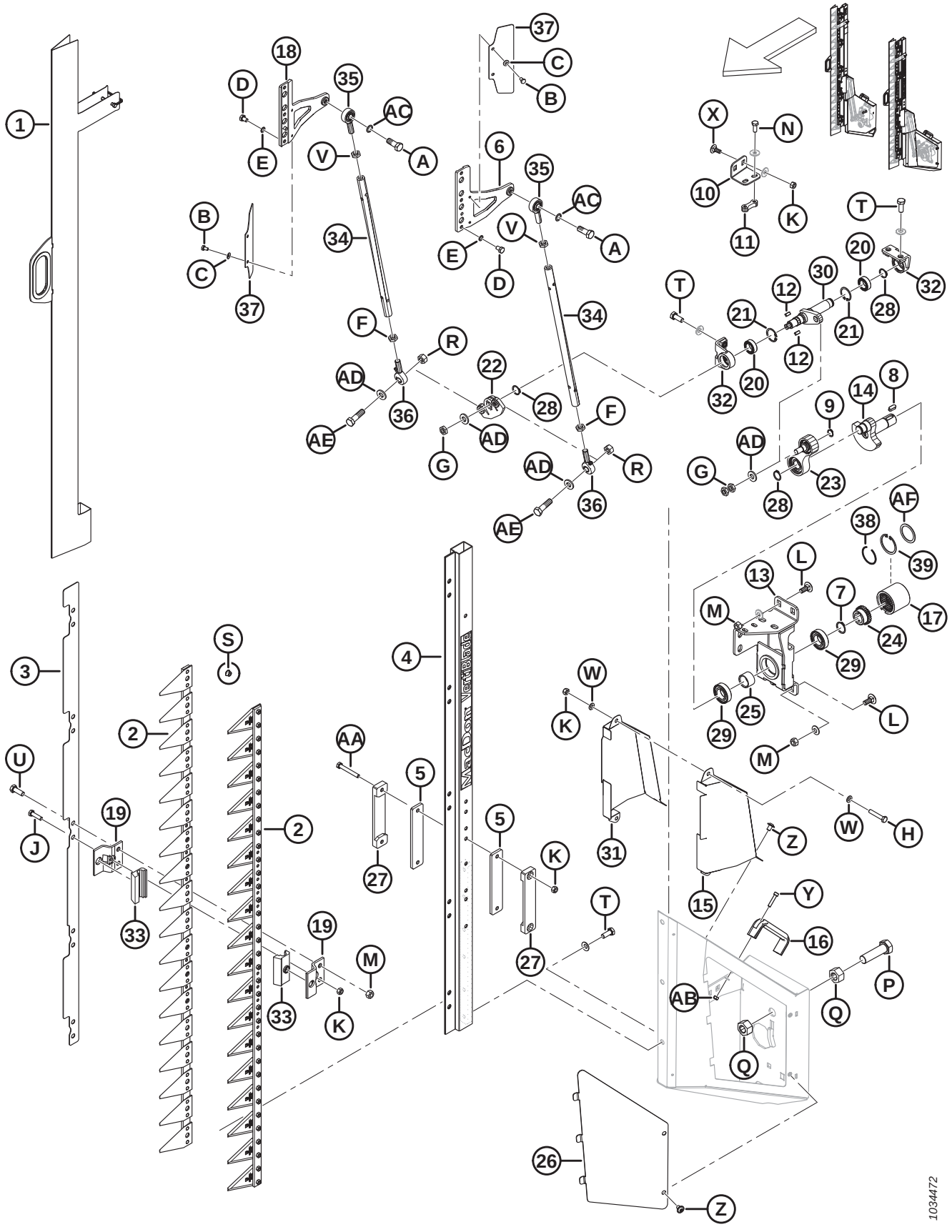

(OPTION) VERTIBLADE™ VERTICAL KNIFE COMPONENTS

Ref	Part Number	Description	Qty	Serial Number
	313501	KNIFE – VERTICAL ASSEMBLY, LH		
	313502	KNIFE – VERTICAL ASSEMBLY, RH		
1	313798	SHIELD – VERTICAL KNIFE	2	
2	313799	KNIFE ASSY – VERTICAL KNIFE	4	
3	313800	PLATE – ADAPTER POSITIONING	2	
4	313802	BAR	2	
5	313805	GUIDE – INNER	4	
6	313807	KNIFEHEAD – LH	2	
7	313810	RING – RETAINING EXTERNAL	2	
8	313815	KEY	2	
9	313819	RING – RETAINING EXTERNAL	2	
10	313882	BRACKET – CRANK DRIVE RH	1	
	313820	BRACKET – CRANK DRIVE LH	1	
11	313821	PLATE – THREADED	2	
12	313824	KEY	4	
13	313884	SUPPORT – RH DRIVE WELDMENT	1	
	313825	SUPPORT – LH DRIVE WELDMENT	1	
14	313828	SHAFT – CRANK	2	
15	313836	COVER – RH KNIFE OUTER	2	
	313835	COVER – LH KNIFE OUTER	2	
16	313841	HANDLE	2	
17	313809	COUPLING	2	
18	313869	KNIFEHEAD – RH	2	
19	313804	GUIDE – KNIFE	20	
20	313817	BEARING – ANGULAR	4	
21	313818	RING – RETAINING INTERNAL	4	
22	313826	ARM – OSCILLATING	2	
23	313827	PITTMAN ASSEMBLY	2	
24	313813	HUB	2	
25	313814	SLEEVE – CRANKSHAFT SPACER	2	
26	313834	COVER – RH SIDE	1	
	313833	COVER – LH SIDE	1	
27	313806	GUIDE – OUTER	4	
28	313811	RING – RETAINING EXTERNAL	6	
29	313812	BEARING	4	
30	313883	SHAFT – DRIVE, RH	1	
	313822	SHAFT – DRIVE, LH	1	
31	313838	COVER – RH KNIFE INNER	1	
	313837	COVER – LH KNIFE INNER	1	
32	313816	SUPPORT – OUTPUT SHAFT	4	
33	313803	GUIDE	20	
34	313829	TUBE	4	
35	313830	JOINT – BALL	4	
36	313831	JOINT – BALL BEARING	4	

(OPTION) VERTIBLADE™ VERTICAL KNIFE COMPONENTS

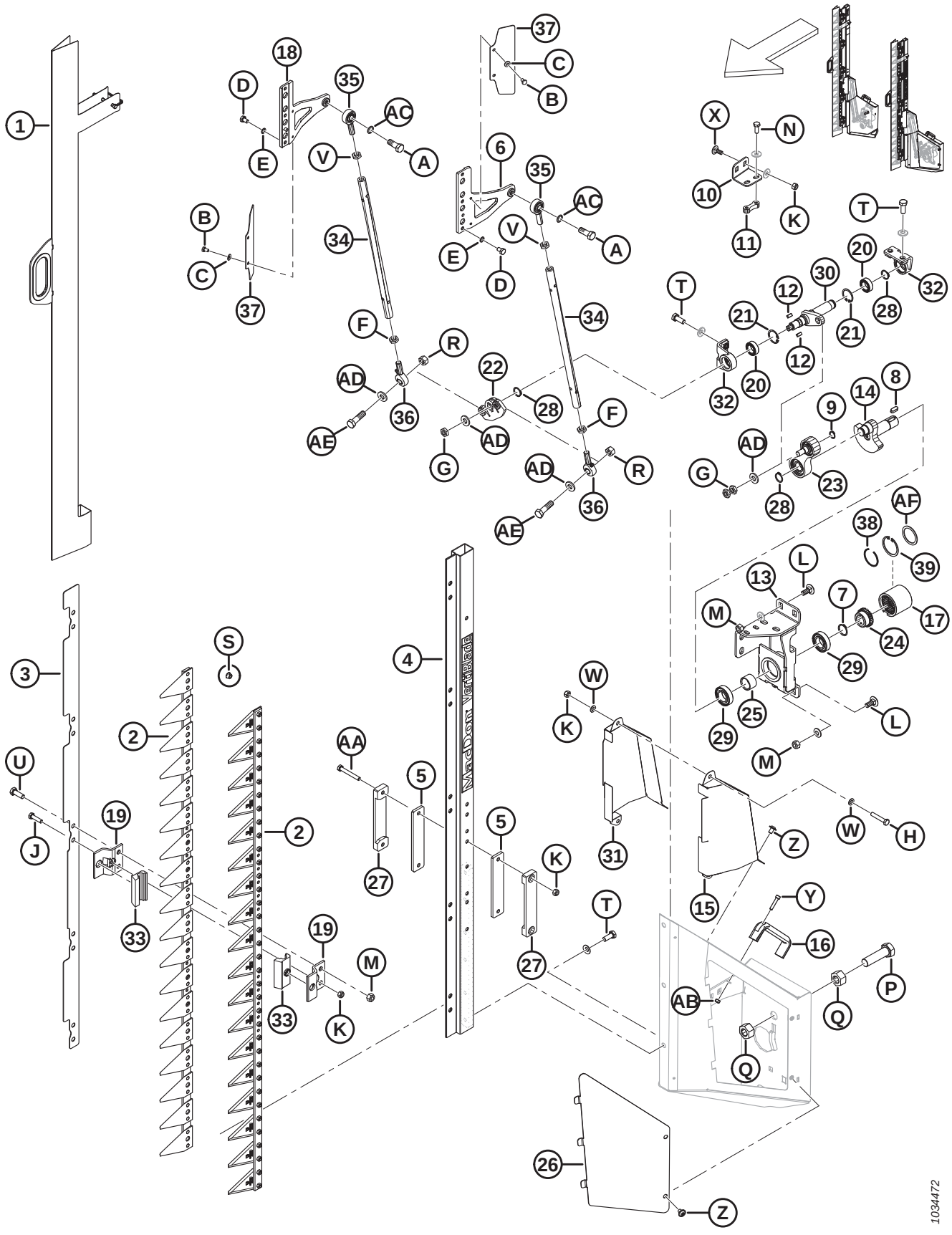

(OPTION) VERTIBLADE™ VERTICAL KNIFE COMPONENTS

Ref	Part Number	Description	Qty	Serial Number
37	313839	DEFLECTOR	4	
38	340077	RING – RETAINING [402]	1	
39	340078	RING – INTERNAL [402]	1	
A	313847	SCREW – M12 X 1.75 X 32		
B	136561	BOLT – HEX HD TFL M6 X 1 X 10-8.8-AA1J		
C	30631	WASHER – LOCK SPRING M6		
D	313848	SCREW – HEX M8 X 1 X 12		
E	313849	WASHER – LOCK SCHNORR		
F	313844	NUT – HEX, M12 X 1.75 LH THD LOCK		
G	313845	NUT – HEX M12 X 1.5		
H	30660	BOLT – HEX HD M8 X 1.25 X 45-8.8-AA1J		
J	50140	BOLT – HEX HD M8 X 1.25 X 30-8.8-AA1J		
K	135337	NUT – HEX FLG CTR LK M8 X 1.25-8-AA1J		
L	135785	BOLT – RHSN M10 X 1.5 X 25-8.8-AA1J		
M	135799	NUT – HEX FLG CTR LOC M10 X 1.5-10		
N	136302	BOLT – HEX SER FLG HD TFL M8 X 1.25 X 20-8.8-ZINC		
P	136339	BOLT – HEX HD FINE TFL M20 X 1.5 X 70 X 8.8-ZINC		
Q	136342	NUT – HEX FINE M20 X 1.5 X 10-AA3L		
R	136759	NUT – HEX CTR LOC M12 X 1.75-8-AA1J		
S	152668	NUT – HEX FLG CTR LOC M6 X 1-8		
T	152670	BOLT – HEX FLG HD M10 X 1.5 X 20-SPC-8.8-AA1J		
U	184661	BOLT – HEX HD TFL M10 X 1.5 X 30-8.8-AA1J		
V	184696	NUT – HEX THIN M12 X 1.75-05-AA1J		
W	184708	WASHER – FLAT M8-200HV-AA1J		
X	197171	BOLT – RHSN M8 X 1.25 X 20-8.8-ZINC		
Y	252236	SCREW – HEX SOC M6 X 1 X 25-10.9 AA1T		
Z	252292	SCREW – HEX SOC BTN HD M8 X 1.25 X 12-10.9-AA1J		
AA	252398	BOLT – HEX HD M8 X 1.25 X 60-8.8-ZINC		
AB	136773	NUT – HEX CTR LOC M6 X 1-8-AA1J		
AC	313846	WASHER – LOCK SCHNORR		
AD	313832	WASHER		
AE	313843	SCREW – M12 X 1.75 X 43		
AF	340076	WASHER [402]		

402. Service part for coupling (MD #313809).

150 Frame Components – Float Module

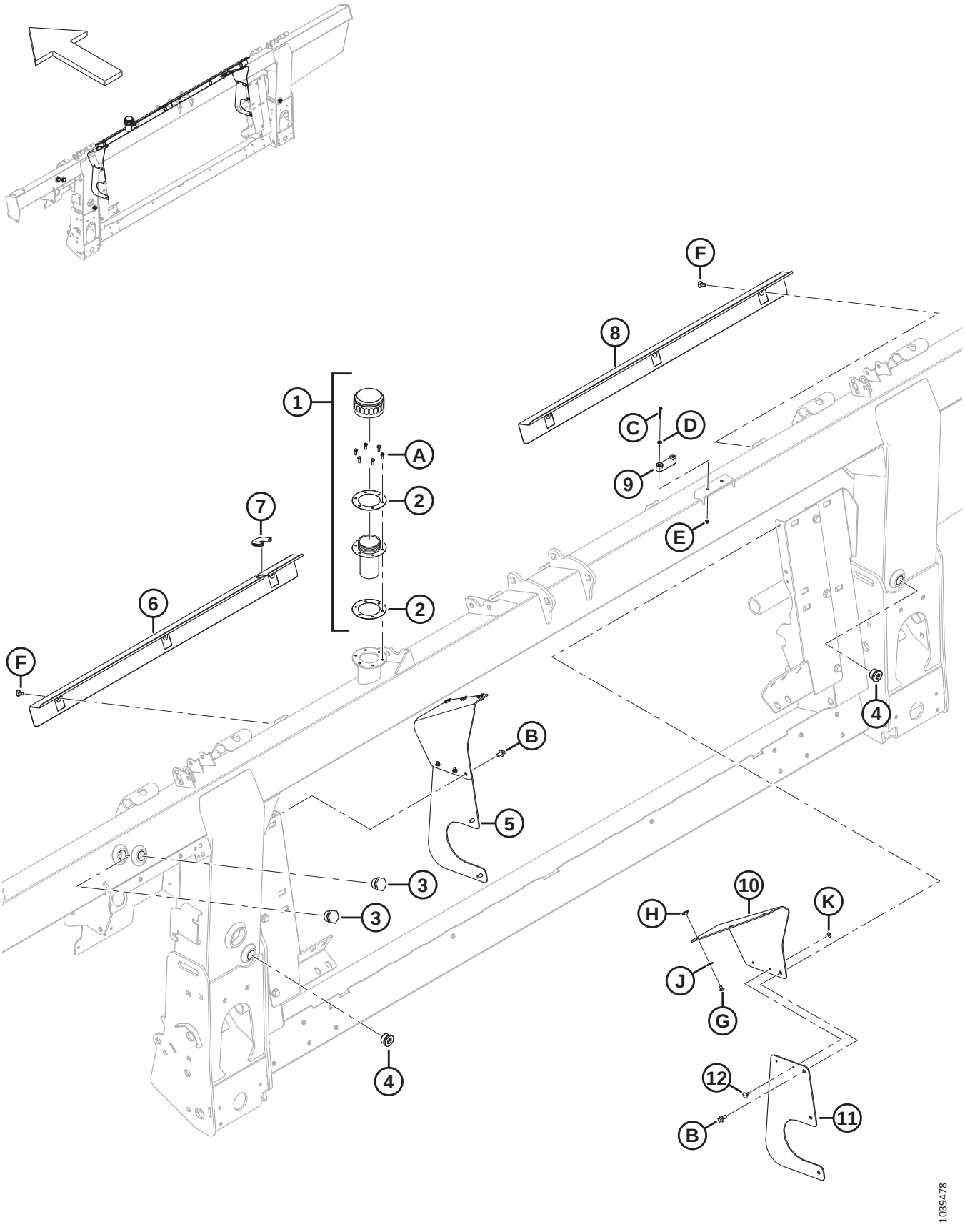

Ref	Part Number	Description	Qty	Serial Number
1	133942	CAP – OIL FILLER [403]	1	
2	304658	GASKET – OIL FILLER (2 PACK)	1	
3	304668	SIGHT GLASS	2	
4	136269	PLUG – HEX SOCKET	2	
	30971	O-RING – Ø2.95 X Ø23.47		
5	**357512**	**KIT – DUST COVER SIDES** [404]	**A/R**	
6	314928	COVER – LH	1	
7	194082	MOULDING	1	
8	322870	COVER – RH	1	
9	322872	LEVEL – BUBBLE	1	
10	**357174**	**FLAP – DUST COVER FILLER**	**2**	
11	**357173**	**COVER – FEED AUGER SIDE**	**2**	
12	**293053**	**RIVET – POP**	**4**	
A	320397	SCREW – HEX HD TFL M5 X 0.8 X 12-8.8-PLAIN (2022 AND LATER)		421190–
	135873	SCREW – MACH #10-32 X 0.5 IN. HEX (2021 AND PRIOR)		–421189
B	136485	BOLT – HEX FLG HD TFL M8 X 1.25 X 16-8.8-AA1J		
C	320388	SCREW – PAN HD TFL M4 X 0.7 X 30-4.8-ZINC		
D	18798	WASHER – FLAT SAE 7/32 ID X 7/16 IN OD AA1J		
E	197320	NUT – HEX NYLOC M4 X 0.7-8-AA1J		
F	NSS	CLIP – PUSH-IN, PANEL		
G	**252291**	**SCREW – PAN HD M6 X 1 X 8-8.8-AA1J**		
H	**252051**	**NUT – TEE M6**		
J	**184706**	**WASHER – FLAT LARGE M6-200HV**		
K	**293054**	**WASHER – FLAT LARGE M5-200HV-AA1J**		

403. Remove the cap and gasket covering the fill hole during shipping (not shown). Retain six screws (MD #135873). Replace the cap and gasket with oil filler cap (MD #133942) which comes complete with oil cap (NSS), filler neck (NSS), and two gaskets (MD #304658). Use the six screws retained from the shipping cap to attach the oil filler cap to the frame. The oil filler cap comes shipped with the frame or can be ordered as a replacement.
404. This kit is used to service units with superseded side covers (MD #347558). The kit includes two dust cover filler flaps (MD #357174), two feed auger side covers (MD #357173), four pop rivets (MD #293053), and hardware.

151 Pump, Gearbox, and Input Drive

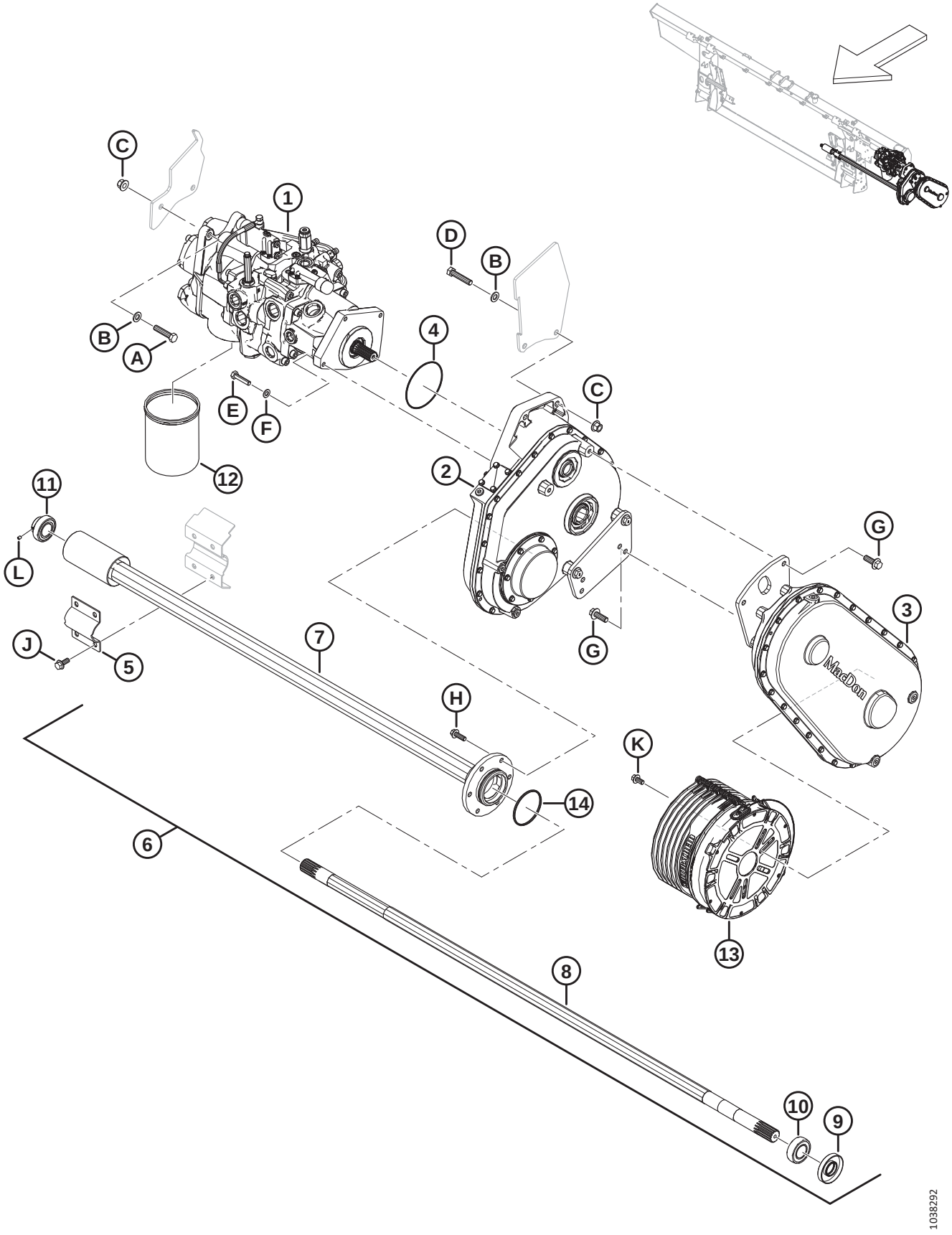

Ref	Part Number	Description	Qty	Serial Number
1	337774	PUMP – INTEGRATED [405]	1	
2	308725	DRIVE – FLOAT MODULE MAIN [406]	1	
3	308726	DRIVE – INPUT 1.14:1 (CNH) [407]	1	
	337713	DRIVE – INPUT 1:1.29 (JD) [408]	1	
	347001	DRIVE – INPUT 1.19:1 (CLAAS) [409]	1	
	308863	DRIVE – INPUT 1:1.04 (AGCO) [410]	1	
4	328713	O-RING – 2.62 X 113.97	1	
5	347185	CLAMP – AUGER PIVOT	1	
6	308732	ASSEMBLY – FEED AUGER SHAFT [411]	1	
7	328370	TUBE – OUTPUT	1	
8	308740	SHAFT – OUTPUT	1	
9	308755	SEAL – SHAFT	1	
10	21363	BEARING – SPH OD AND COLLAR C/W 2 SEALS	1	
11	328371	BEARING – INSERT	1	
12	320360	FILTER – HYD C/W 2X SEALS	1	
13	328316	GUARD – COUNTER CONE 250 MM	1	
14	252462	O-RING 3.18 X 82.55	1	
A	152779	BOLT – HEX HD M12 X 1.75 X 55-8.8-AA1J		
B	184714	WASHER – FLAT REG M12-300HV		
C	136431	NUT – HEX FLG CTR LOC M12 X 1.75-10		
D	152274	BOLT – HEX HD M12 X 1.75 X 60-8.8-AA1J		
E	135335	BOLT – HEX HD M10 X 1.5 X 45-8.8-AA1J		
F	184711	WASHER – FLAT REG M10-200HV-AA1J		
G	152731	BOLT – HEX FLG HD TFL M12 X 1.75 X 35-10.9-AA1J		
H	184665	BOLT – HEX FLG HD M10 X 1.5 X 30-10.9-AA1J		
J	135783	BOLT – HEX FLG HD TFL M10 X 1.5 X 25-10.9-AA1J		
K	152655	BOLT – HEX FLG HD M10 X 1.5 X 20-8.8-AA1J		
L	320418	SCREW – SET HEX SOC 1/4-28 X 5/16-GR5-ZINC		

405. For pump assembly, refer to Section *152 Pump Assembly, page 363*.
406. For gearbox assembly, refer to Section *154 Gearbox Assembly, page 369*.
407. Used with Case and New Holland combines. For input drive assembly, refer to Section *155 Input Drive Assembly, page 373*.
408. Used with John Deere combines. For input drive assembly, refer to Section *155 Input Drive Assembly, page 373*.
409. Used with CLAAS combines. For input drive assembly, refer to Section *155 Input Drive Assembly, page 373*.
410. Used with AGCO combines. For input drive assembly, refer to Section *155 Input Drive Assembly, page 373*.
411. The feed auger shaft assembly includes shaft seal (MD #308755), collar bearing (MD #21363), output tube (MD #328370), output shaft (MD #328202), insert bearing (MD #328371), O-ring (MD #252462), and two set screws (MD #320418).

152 Pump Assembly

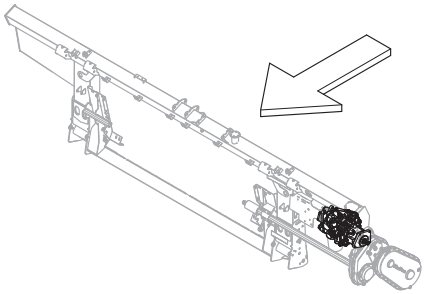

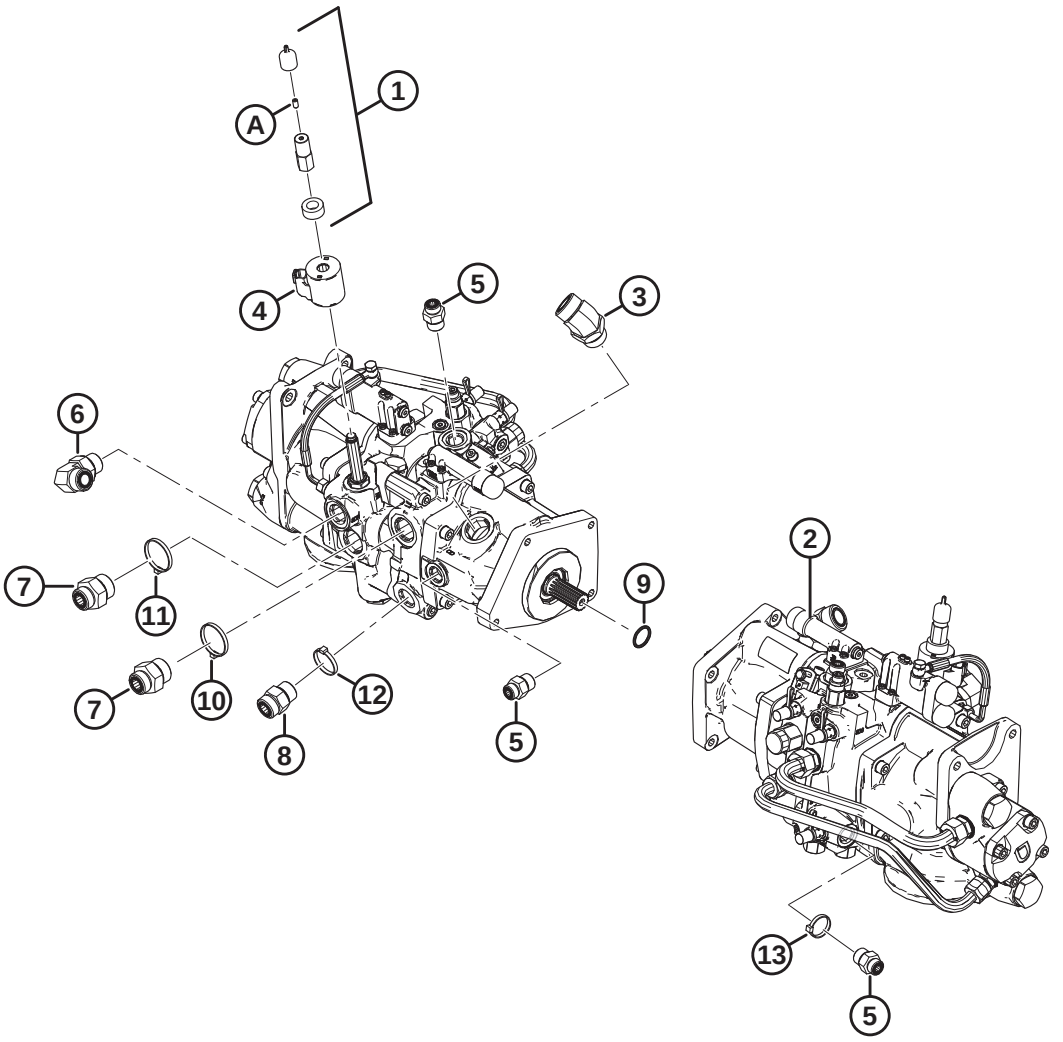

1034439

Ref	Part Number	Description	Qty	Serial Number
1	328262	KIT – MANUAL OVERRIDE [412]	1	
2	337774	PUMP – INTEGRATED [413]	1	
	322148	SEAL KIT		
3	252814	FITTING – ELBOW 45° HYD	1	
	135554	O-RING – 1.78 X 23.52		
	50220	O-RING – Ø2.95 X Ø29.74		
4	209045	COIL – SOLENOID	1	
5	184463	FITTING – ADAPTER HYD (M1, M2)	3	
	44210	O-RING – Ø2.46 X Ø19.18		
	135866	O-RING – Ø1.78 X Ø12.42		
6	135821	FITTING – ELBOW 90° HYD (SDP)	1	
	30971	O-RING – Ø2.95 X Ø23.47		
	135868	O-RING – Ø1.78 X Ø18.77		
7	135789	FITTING – ADAPTER (KP)	2	
	50220	O-RING – Ø2.95 X Ø29.74		
	135868	O-RING – Ø1.78 X Ø18.77		
8	135788	FITTING – ADAPTER (SDR)	1	
	30971	O-RING – Ø2.95 X Ø23.47		
	135868	O-RING – Ø1.78 X Ø18.77		
9	17006	O-RING – 3.18 X 25.40	1	
10	40704	FASTENER – CABLE TIE, ORANGE	1	
11	40703	FASTENER – CABLE TIE, BLUE	1	
12	40702	FASTENER – CABLE TIE, RED	1	
13	21763	FASTENER – CABLE TIE, BLACK	1	
A	21061	SCREW – SET HEX SOC 1/4-20 X 1/2 GR5 AF0C	1	

412. The kit includes spacer coil (NSS), dust cap (NSS), coil nut (NSS), and set screw (MD #21061).
413. If replacement parts are needed for discontinued seal kit (MD #328281) or discontinued relief valves (MD #322159 and MD #328282), order new integrated pump (MD #337774). For integrated pump service parts, refer to Section *153 Integrated Pump – Service Parts, page 365*.

153 Integrated Pump – Service Parts

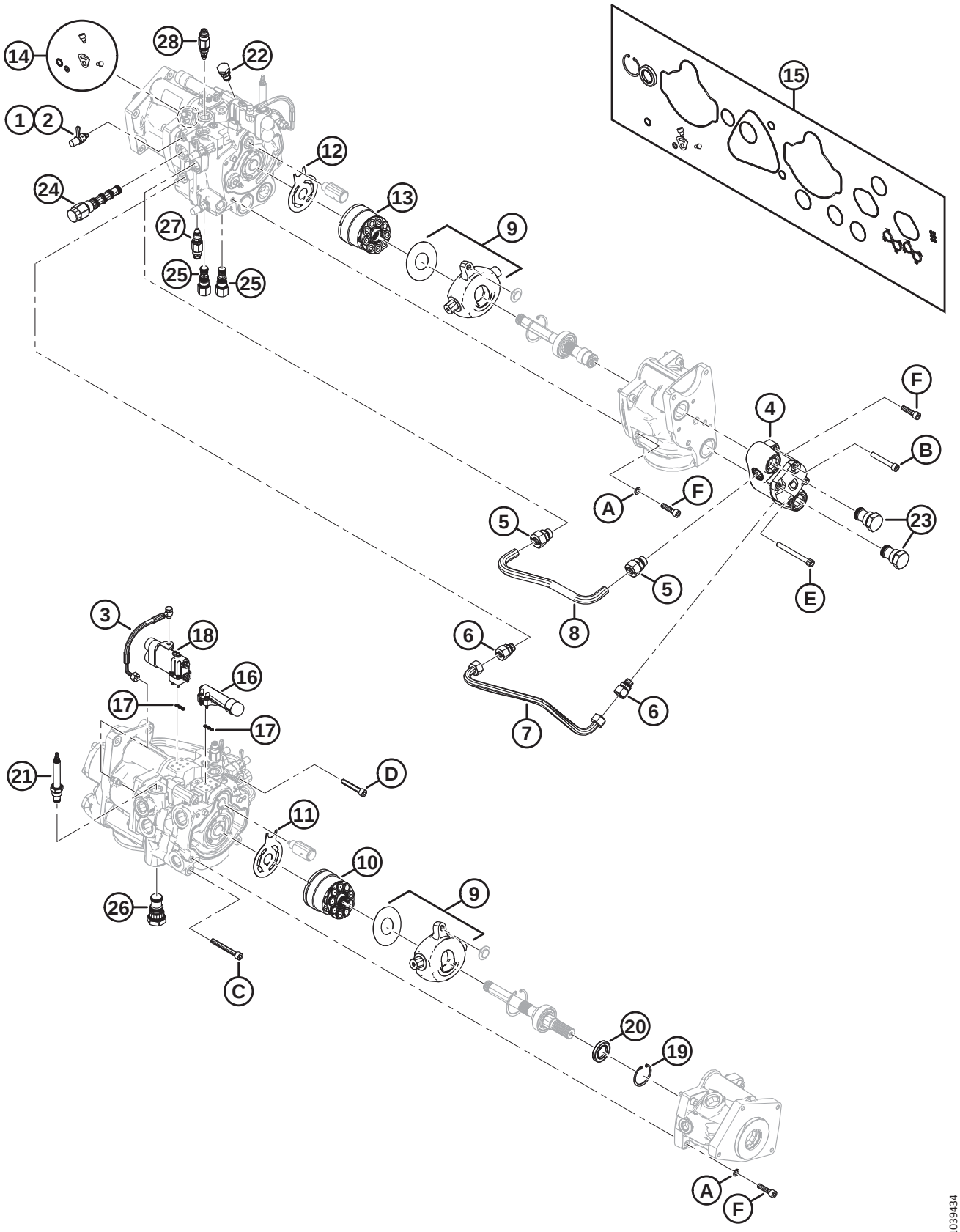

NOTE:

All illustrated parts that are **NOT** in the parts list are non-serviced parts, illustrated for reference only.

Ref	Part Number	Description	Qty	Serial Number
	337774	PUMP – INTEGRATED [414]		
1	136900	CAP – DUST	3	
2	134437	FITTING – COUPLING HYD-TEST PORT	3	
3	276790	KIT – LS HOSE AND HARDWARE	1	
4	328288	KIT – 15CC GEAR PUMP W/ HARDWARE	1	
5	328292	FITTING – ADAPTER (18 MM)	2	
6	328293	FITTING – ADAPTER (15 MM)	2	
7	328291	LINE – REVERSE	1	
8	328290	LINE – FORWARD	1	
9	337441	KIT – SWASHPLATE REBUILD	2	
10	328313	KIT – 45CC ROTATING GROUP	1	
11	328312	PLATE – VALVE	1	
12	328311	PLATE – VALVE	1	
13	328310	KIT – 38CC ROTATING GROUP	1	
14	337440	KIT – KNIFE PUMP CAM SEAL	1	
15	328309	KIT – PUMP SEAL	1	
16	328306	KIT – COMPENSATOR (PRESSURE)	1	
17	328308	KIT – COMPENSATOR SEALS (LOAD SENSE)	2	
18	328307	KIT – COMPENSATOR LS	1	
19	328178	RING – RETAINING INTERNAL	1	
20	322142	SEAL – SHAFT	1	
21	328261	VALVE – FLOW CONTROL (MV)	1	
	252351	SEAL KIT		
22	123318	VALVE – CHECK (CV6)	1	
	328284	SEAL KIT		
23	322161	VALVE – CHECK (CV1, CV2)	2	
	328283	SEAL KIT		
24	322160	VALVE – PO 3WAY (DH)	1	
	328269	SEAL KIT		
25	322158	VALVE – PO LOGIC -10 (LE1, LE2)	2	
	322148	SEAL KIT		
26	322157	VALVE – PO LOGIC ELEMENT-16 (LE3)	1	
	322149	SEAL KIT		
27	337773	VALVE – RELIEF (RV2)	1	
	337823	SEAL KIT		
28	337770	VALVE – RELIEF (RV1)	1	
	337823	SEAL KIT		
	328262	KIT – MANUAL OVERRIDE [414]	1	

414. Refer to Section *152 Pump Assembly, page 363*.

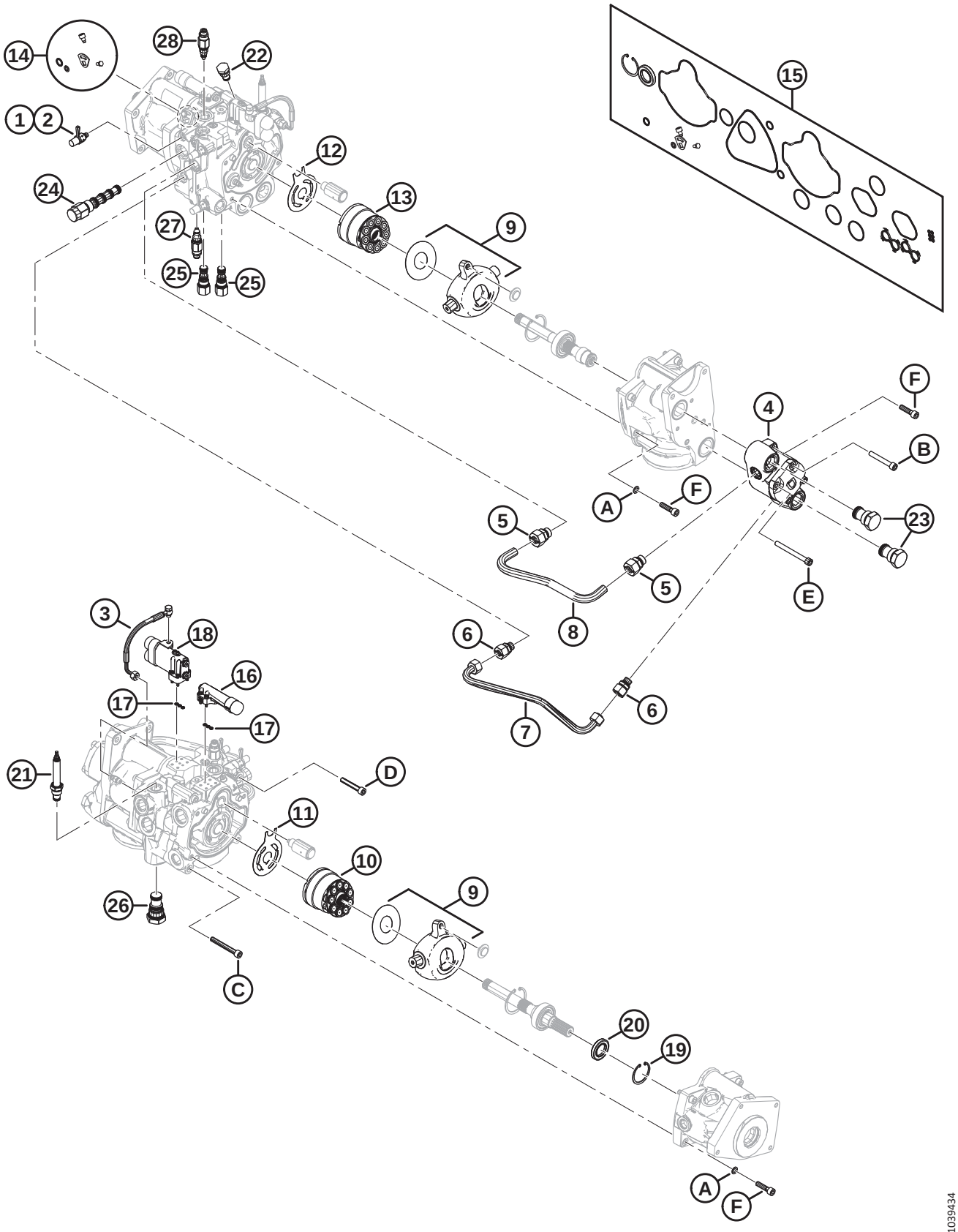
14
28
22
1
2
12
24
13
9
27
25
25
15
F
4
B
A
F
5
23
5
E
8
3
18
6
16
17
17
6
7
21
D
11
10
9
26
C
20
19
A
F
1039434

Ref	Part Number	Description	Qty	Serial Number
A	**337433**	**WASHER – M10 SPECIAL**		
B	**337427**	**BOLT – SOC HD M10 X 70GR12.9**		
C	**337431**	**BOLT – SOC HD M10 X 80GR12.9**		
D	**337432**	**BOLT – SOC HD M10 X 60GR12.9**		
E	**337429**	**BOLT – SOC HD M10 X 100 GR12.9**		
F	**337430**	**BOLT – SOC HD M10 X 40GR12.9**		

154 Gearbox Assembly

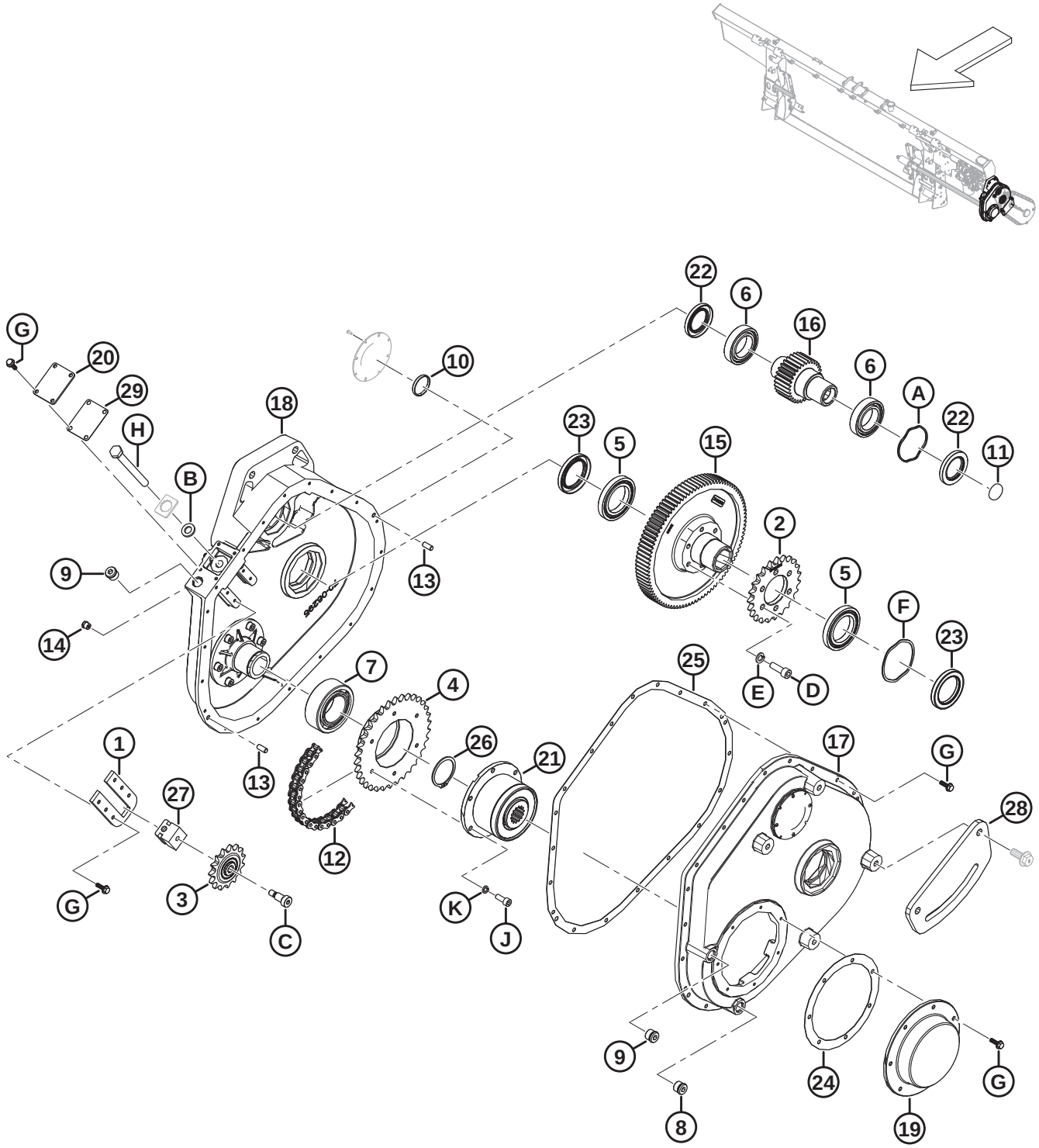

1038480

GEARBOX ASSEMBLY

Ref	Part Number	Description	Qty	Serial Number
	308725	DRIVE – FLOAT MODULE MAIN		
	347405	KIT – GEARBOX UPDATE [415]	A/R	
1	328181	PLATE – TENSIONER	1	
2	322409	SPROCKET – 50A23	1	
3	328188	SPROCKET – 50B15 C/W BEARING	1	
4	328187	SPROCKET – 50B34	1	
5	322193	BEARING – BALL	2	
6	322192	BEARING – BALL	2	
7	322197	BEARING – DOUBLE ROW BALL	1	
8	328154	PLUG – M18 ORB MAGNETIC	1	
9	328152	PLUG – M18 ORB	1	
10	328186	PLUG	1	
11	328185	PLUG	1	
12	301971	CHAIN – ROLLER, RC-50-56P ENDLESS	1	
13	NSS	PIN – DOWEL	2	
14	328176	BREATHER – 1/8-27 NPT	1	
15	328175	GEAR – 94 TEETH	1	
16	328174	GEAR – 30 TEETH	1	
17	NSS	HOUSING – GEARBOX	1	
18	NSS	HOUSING – GEARBOX	1	
19	328164	COVER – CLUTCH	1	
20	328165	COVER – TENSIONER	1	
21	314082	CLUTCH – WEASLER	1	
22	347416	SEAL – VITON 38 X 62 X 7	2	
23	347417	SEAL – VITON 48 X 72 X 8	2	
24	328161	GASKET – CLUTCH COVER	1	
25	347410	GASKET – FM200 MAIN GEARBOX	1	
26	322195	RING – RETAINING	1	
27	328157	BLOCK – IDLER	1	
28	347349	BRACKET – MAIN CMPLTN JOINT	1	
29	328162	GASKET – TENSIONER	1	
A	328160	WASHER – WAVE SPRING		
B	184587	WASHER – FLAT 1/2 X 1.25 AA1J		
C	328184	BOLT – SHOULDER 3/8-16 X 3/4 LG		
D	347978	SCREW – CAP M10 X 1.5 X 30		
	135401	SCREW – HEX SOC HD TFL M10 X 1.5 X 30-8.8-AA1J [416]		
E	347975	WASHER – LOCK M10 CAP SCREW		
	30632	WASHER – LOCK SPRING M10 [416]		

415. The gearbox update kit is used to update model year 2020 gearboxes. The kit includes spacers (MD #347408, MD #347409), gasket (MD #347410), two seals (MD #347416), two seals (MD #347417), wave spring washers (MD #328159, MD #328160), gears (MD #328174, MD #328175), ball bearings (MD #322192, MD #322193), sprocket (MD #322409), screws (MD #135401), washers (MD #30632), and instructions.

416. For machines serviced with gearbox update kit (MD #347405).

GEARBOX ASSEMBLY

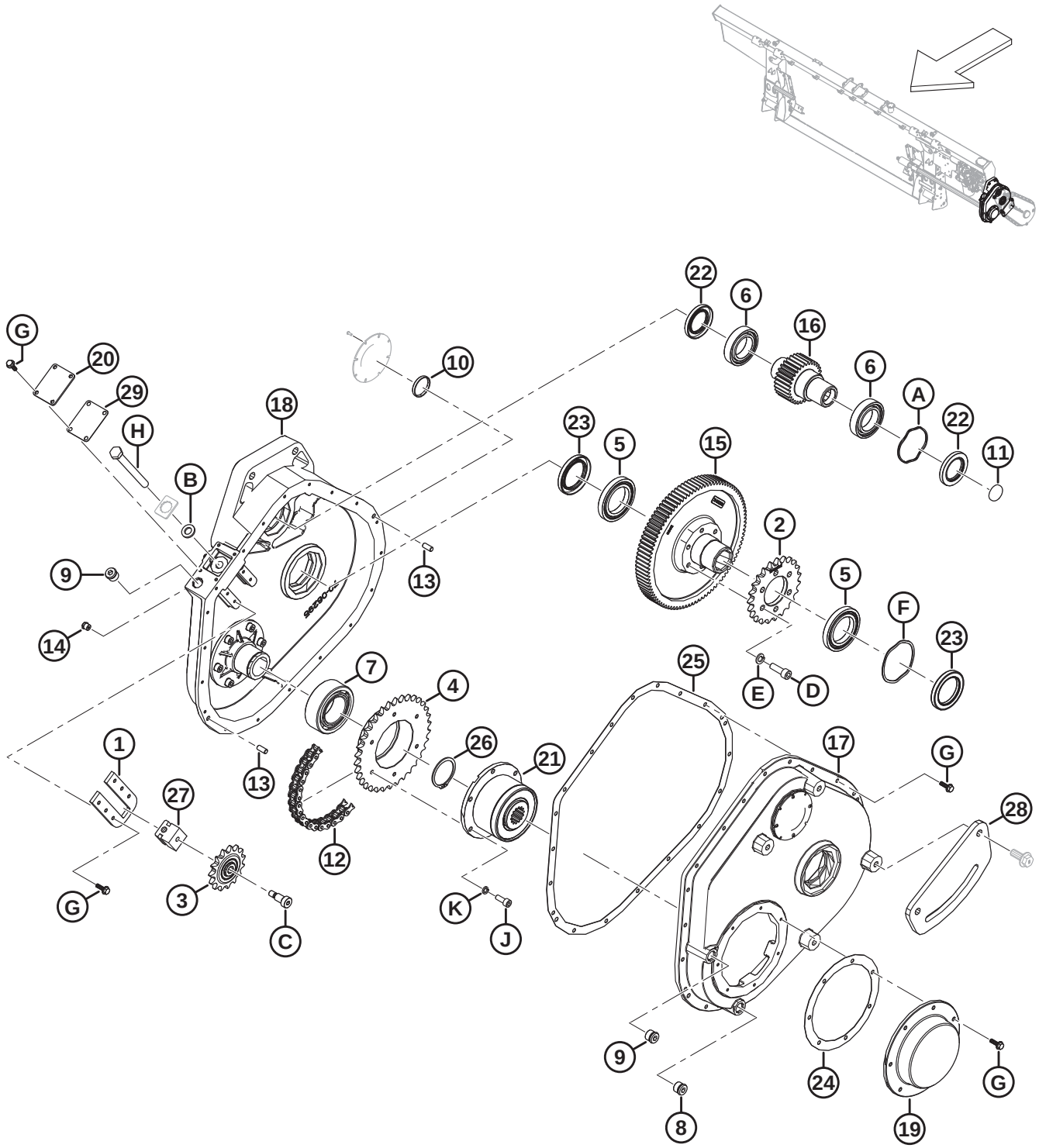

Ref	Part Number	Description	Qty	Serial Number
F	328159	WASHER – WAVE SPRING		
G	328156	BOLT – SERRATED FLANGE		
H	328158	BOLT – TENSIONER		
J	347977	SCREW – CAP M8 X 1 X 20		
K	347976	WASHER – LOCK M8 CAP SCREW		

155 Input Drive Assembly

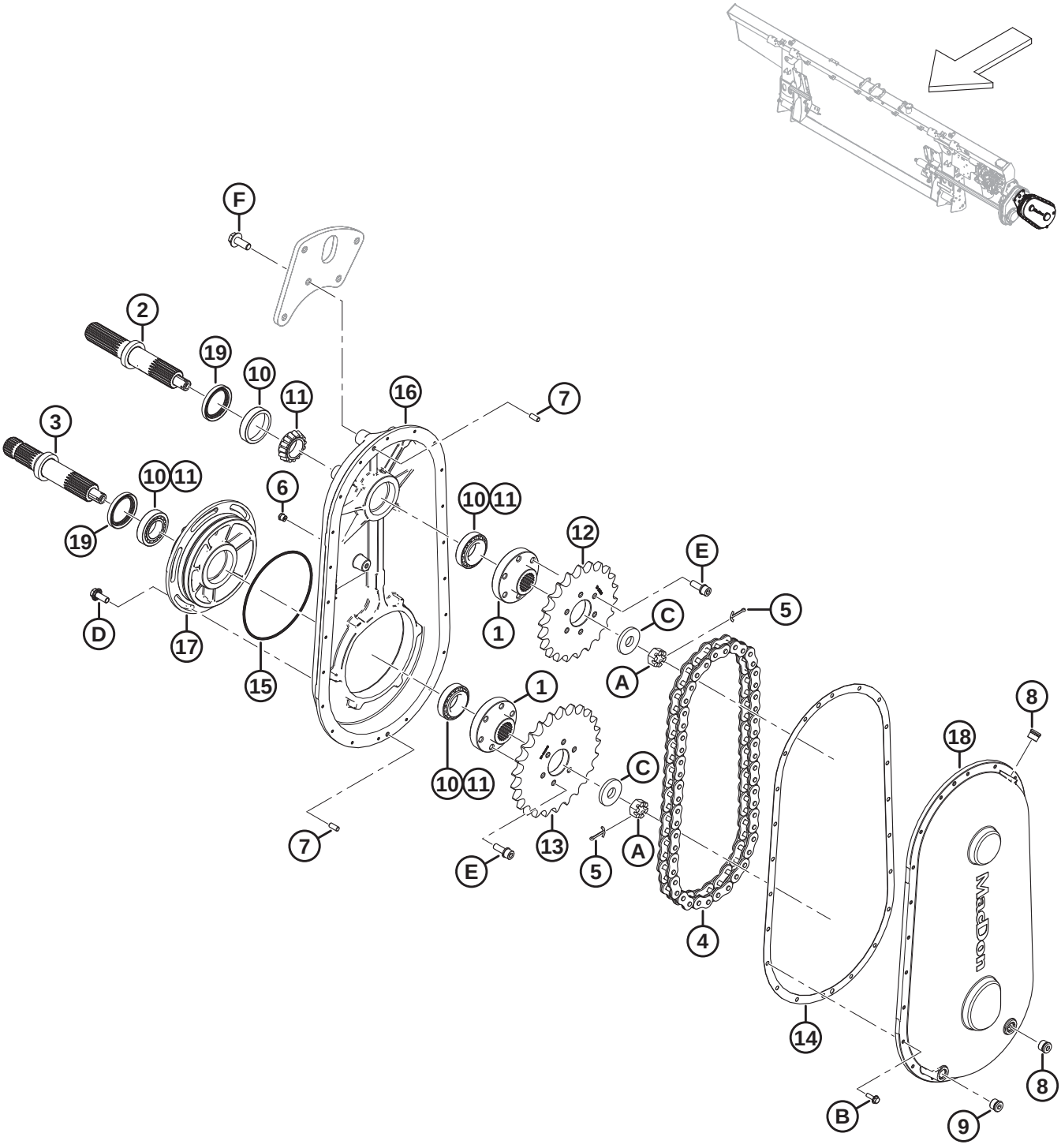

INPUT DRIVE ASSEMBLY

Ref	Part Number	Description	Qty	Serial Number
	B7041	KIT – CNH INPUT DRIVE SPROCKETS [417]		
	B7042	KIT – JD INPUT DRIVE SPROCKETS [418]		
	B7308	KIT – CLAAS INPUT DRIVE SPROCKETS [419]		
	B7111	KIT – AGCO IDEAL DRIVE INPUT SPRCKT [420]		
	308726	DRIVE – INPUT 1.14:1 (CNH) [421]		
	337713	DRIVE – INPUT 1:1.29 (JD) [422]		
	347001	DRIVE – INPUT 1.19:1 (CLAAS) [423]		
	308863	DRIVE – INPUT 1:1.04 (AGCO) [424]		
1	328203	HUB – SPLINED	2	
2	328202	SHAFT – OUTPUT	1	
3	328201	SHAFT – INPUT	1	
4	328120	CHAIN – RC80 50 PT ENDLESS	1	
5	18607	PIN – COTTER 5/32 DIA X 1.5 ZP	2	
6	328176	BREATHER – 1/8-27 NPT	1	
7	NSS	PIN – DOWEL	2	
8	328152	PLUG – M18 ORB	2	
9	328154	PLUG – M18 ORB MAGNETIC	1	
10	30701	BEARING – CUP	4	
11	30702	BEARING – CONE	4	
12	308852	SPROCKET – 80A22 (CNH)	1	
	337667	SPROCKET – 80A21 (JD)	1	
	308848	SPROCKET – 80A25 (CLAAS)	1	
	308856	SPROCKET – 80A23 (AGCO)	1	
13	308848	SPROCKET – 80A25 (CNH)	1	
	308853	SPROCKET – 80A27 (JD)	1	
	337667	SPROCKET – 80A21 (CLAAS)	1	
	308855	SPROCKET – 80A24 (AGCO)	1	
14	328200	GASKET – COMPLETION DRIVE	1	
15	328199	O RING – #260	1	
16	328198	HOUSING – COMP GEARBOX	1	
17	328197	HOUSING – ECCENTRIC	1	

417. The kit includes gasket (MD #328200), chain (MD #328120), sprockets (MD #308848, MD #308852), and instructions. Kits are available through Whole Goods only.
418. The kit includes gasket (MD #328200), chain (MD #328120), sprockets (MD #308853, MD #337667), and instructions. Kits are available through Whole Goods only.
419. The kit includes gasket (MD #328200), chain (MD #328120), sprockets (MD #308848, MD #337667), and instructions. Kits are available through Whole Goods only.
420. The kit includes gasket (MD #328200), chain (MD #328120), sprockets (MD #308855, MD #308856), and instructions. Kits are available through Whole Goods only.
421. Used with Case and New Holland combines.
422. Used with John Deere combines.
423. Used with CLAAS combines.
424. Used with Challenger, Gleaner, IDEAL™, and Massey Ferguson combines.

INPUT DRIVE ASSEMBLY

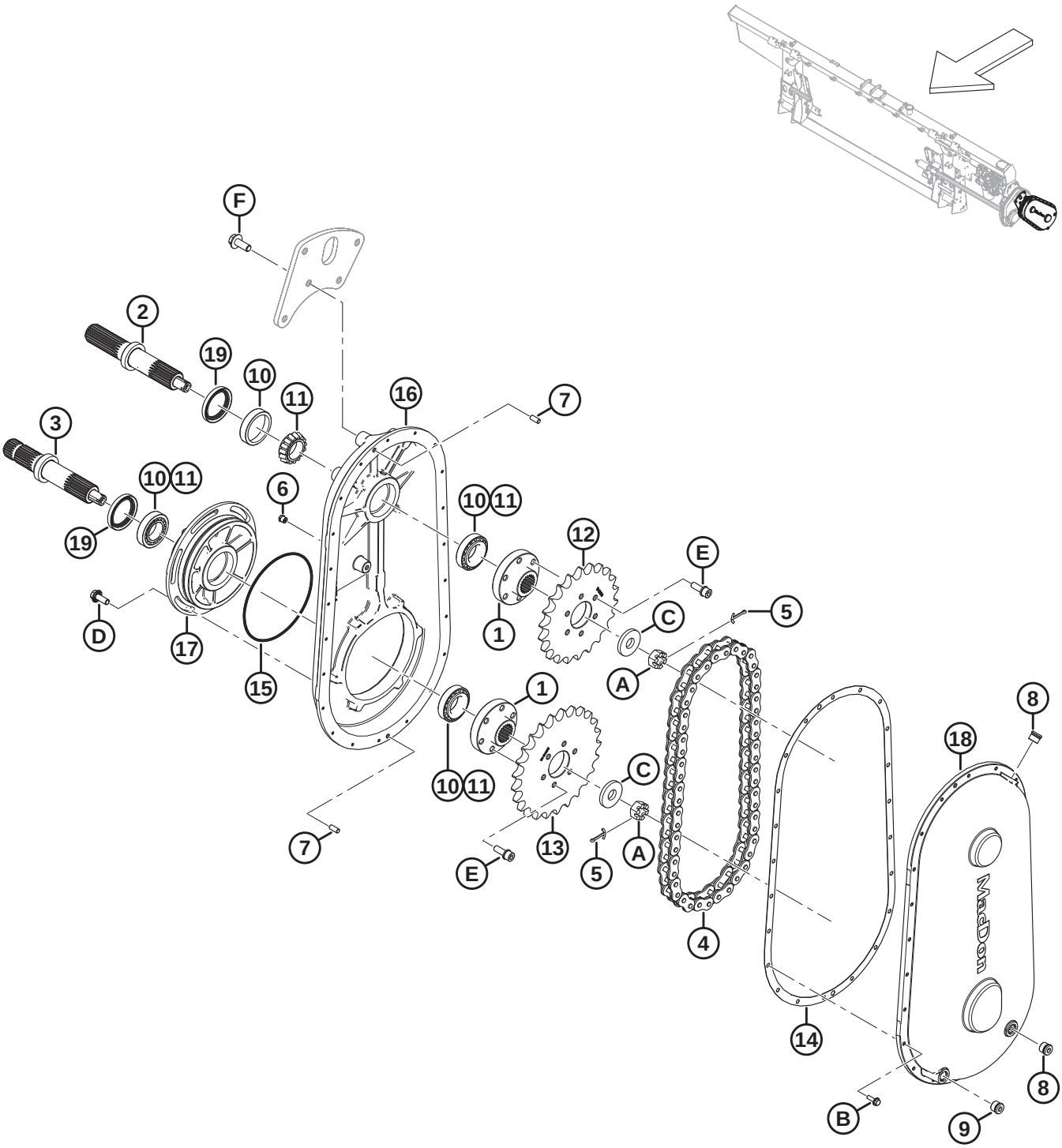

Ref	Part Number	Description	Qty	Serial Number
18	**NSS**	COVER – COMP GEARBOX	1	
19	187477	SEAL	2	
A	5512	NUT – HEX SLOTTED .750-16 UNF ZN PL		
B	328156	BOLT – SERRATED FLANGE		
C	6647	WASHER – FLAT		
D	135783	BOLT – HEX FLG HD TFL M10 X 1.5 X 25-10.9-AA1J		
E	328183	BOLT – M10 X 1.25 X 30 SEMS		
F	**320180**	**BOLT – HEX FLG HD M12 X 1.75 X 30-SPCL-8.8-AA1J**		

156 Input Driveline and Support

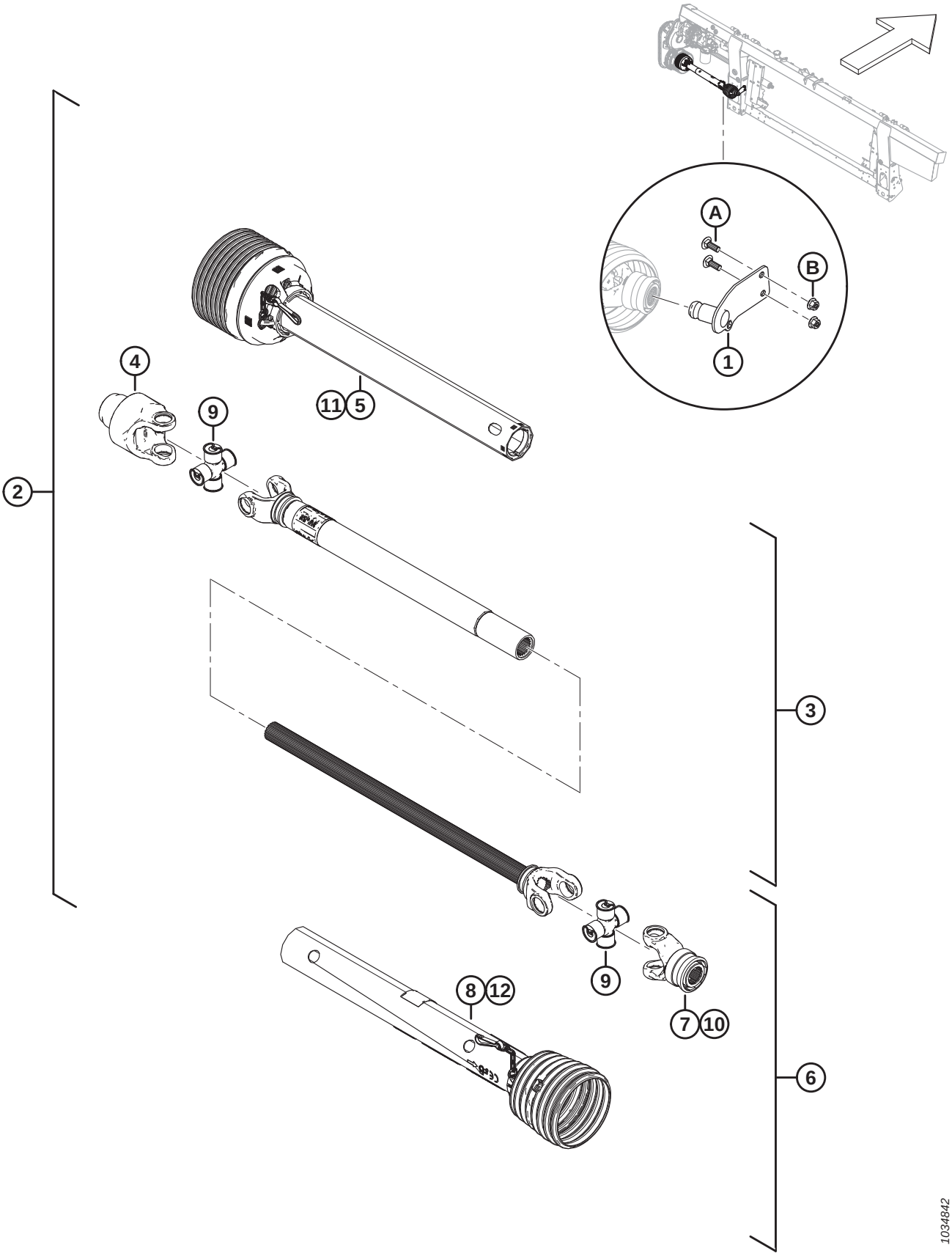

INPUT DRIVELINE AND SUPPORT

Ref	Part Number	Description	Qty	Serial Number
	B7038	KIT – 6 TOOTH SPLINE CE DRIVELINE [425]	1	
	B7039	KIT – 21 TOOTH SPLINE CE DRIVELINE [426]	1	
	B7108	KIT – 20T DRIVESHAFT BUNDLE [427]	1	
1	322486	SUPPORT WELDT – 6T PTO STORAGE [428]	1	
	322456	SUPPORT WELDT – 21T PTO STORAGE [429]	1	
	328924	SUPPORT WELDT – 20T STORAGE [430]	1	
2	314173	DRIVELINE – 6T SPLINE [431]	1	
	314174	DRIVELINE – 1.375 IN 21T SPLINE CE [432]	1	
	322114	DRIVELINE – 1 3/4 20T-SPLINE [433]	1	
3	322915	DRIVELINE – IMPLEMENT HALF	1	
4	133631	YOKE – FREE MOTION	1	
5	322916	DRIVELINE – IMPLEMENT GUARD	1	
6	322926	DRIVELINE – 6T COMBINE HALF [428]	1	
	322924	DRIVELINE – 21T COMBINE HALF [429]	1	
	322930	DRIVELINE – 20T COMBINE HALF [430]	1	
7	133634	YOKE – 6T [428]	1	
	322925	YOKE – 21T [429]	1	
	322931	YOKE – 20T [430]	1	
8	322917	DRIVELINE – COMBINE END GUARD	1	
9	142777	CROSS JOURNAL KIT	2	
10	40095	KIT – REPAIR	1	
	150891	KIT – SLIDE LOCK YOKE REPAIR [430]	1	
11	322918	INNER GUARD REPAIR KIT [434]	1	
12	220766	SHIELD REPAIR KIT CE [434]	1	
	36651	DECAL – DANGER		
	194521	DECAL – WARNING		
	30316	DECAL – DANGER		
A	184662	BOLT – RHSN TFL M10 X 1.5 X 30-8.8-AA1J		
B	135799	NUT – HEX FLG CTR LOC M10 X 1.5-10		

425. 6-tooth splined driveline kit for Case and New Holland combines. Kits are available through Whole Goods only.
426. 21-tooth splined driveline kit for Case, New Holland, John Deere, CLAAS, AGCO Challenger®/Massey Ferguson®, and AGCO Gleaner® combines. Kits are available through Whole Goods only.
427. 20-tooth splined driveline kit for AGCO IDEAL™ Series combines. Kits are available through Whole Goods only.
428. For 6-tooth spline driveline.
429. For 21-tooth spline driveline.
430. For 20-tooth spline driveline.
431. 6-tooth splined driveline kit for Case and New Holland combines.
432. 21-tooth splined driveline kit for Case, New Holland, John Deere, CLAAS, AGCO Challenger®/Massey Ferguson®, and AGCO Gleaner® combines.
433. 20-tooth splined driveline kit for AGCO IDEAL™ Series combines
434. The kit includes chain kit, bearing, lock seal, and instructions.

157 Input Driveline and Support – High Angle

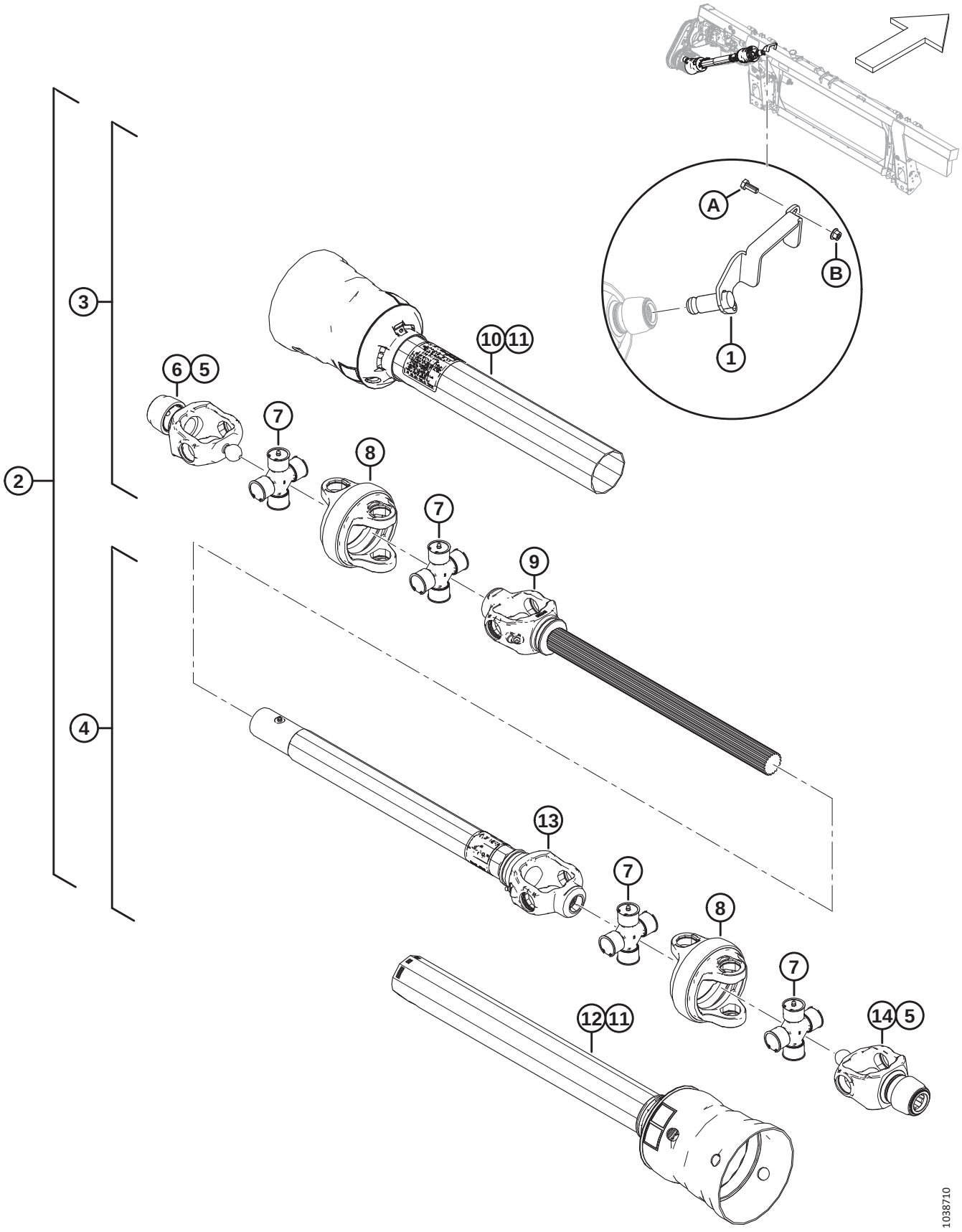

Ref	Part Number	Description	Qty	Serial Number
	B7180	KIT – 6T LONG HI-ANGLE DRIVESHAFT [435]		
	B7181	KIT – 21T LONG HI-ANGLE DRIVESHAFT [436]		
	B7182	KIT – 21T SHORT HI-ANGLE DRIVESHAFT [437]		
	B7326	KIT – 21T MID HI-ANGLE DRIVESHAFT [438]		
1	357064	SUPPORT WELDT – 6T PTO STORAGE [439]	1	
	357012	SUPPORT WELDT – 21T PTO STORAGE [440]	1	
2	322996	DRIVELINE – 6T HIGH ANGLE	1	
	322997	DRIVELINE – 21T HIGH ANGLE LONG	1	
	322998	DRIVELINE – 21T HIGH ANGLE SHORT	1	
3	337709	DRIVELINE – 6T SHAFT HALF, GUARDED [439]	1	
	337707	DRIVELINE – 21T SHAFT HALF, GUARDED [441]	1	
	337725	DRIVELINE – 21T SHAFT HALF, GUARDED [442]	1	
4	337723	DRIVELINE – 21T TUBE HALF, GUARDED [443]	1	
	337727	DRIVE – 21T TUBE HALF, GUARDED [444]	1	
5	133632	KIT – AUTO LOK REPAIR	2	
6	337711	YOKE – 21T CV	1	
7	337712	CROSS KIT	4	
8	337715	HOUSING CV	2	
9	337716	DRIVELINE – CV YOKE AND SHAFT [445]	1	
	337729	DRIVELINE – CV YOKE AND SHAFT [442]	1	
10	337717	DRIVELINE – OUTER GUARD [445]	1	
	337730	DRIVELINE – OUTER GUARD [442]	1	
11	337718	DRIVELINE – GUARD REPAIR KIT	2	
12	337720	DRIVELINE – INNER GUARD [443]	1	
	337731	DRIVELINE – INNER GUARD [444]	1	
13	337721	DRIVELINE – YOKE TUBE AND SLEEVE [443]	1	
	337732	DRIVELINE – YOKE TUBE AND SLEEVE [444]	1	
14	337722	6T YOKE CV [439]	1	
	337711	21T YOKE CV [446]	1	

435. Long 6-tooth splined driveline kit for Case and New Holland Wide and Narrow combines, Sidehill (18%) and Hillside (27%) configurations. Kits are available through Whole Goods only.
436. Long 21-tooth splined driveline kit for Case and New Holland Wide and Narrow combines, Sidehill (18%) and Hillside (27%) configurations; and for John Deere combines, Hillside (27%) configuration. Kits are available through Whole Goods only.
437. Short 21-tooth splined driveline kit for John Deere and CLAAS combines, Sidehill (18%) configuration. Kits are available through Whole Goods only.
438. Mid 21-tooth splined driveline kit for Case and New Holland wide and narrow combines with Everest package, and Case and New Holland Hillco Hillside Beaterless (27%) package, and John Deere Hillside (27%) package.
439. For long 6-tooth spline drivelines.
440. For 21-tooth spline drivelines.
441. For mid and long 21-tooth spline drivelines.
442. For short 21-tooth spline drivelines.
443. For long 6-tooth and long 21-tooth spline drivelines.
444. For short and mid 21-tooth spline drivelines.
445. For long 6-tooth, and mid and long 21-tooth spline drivelines.
446. For long and short 21-tooth spline drivelines.

INPUT DRIVELINE AND SUPPORT – HIGH ANGLE

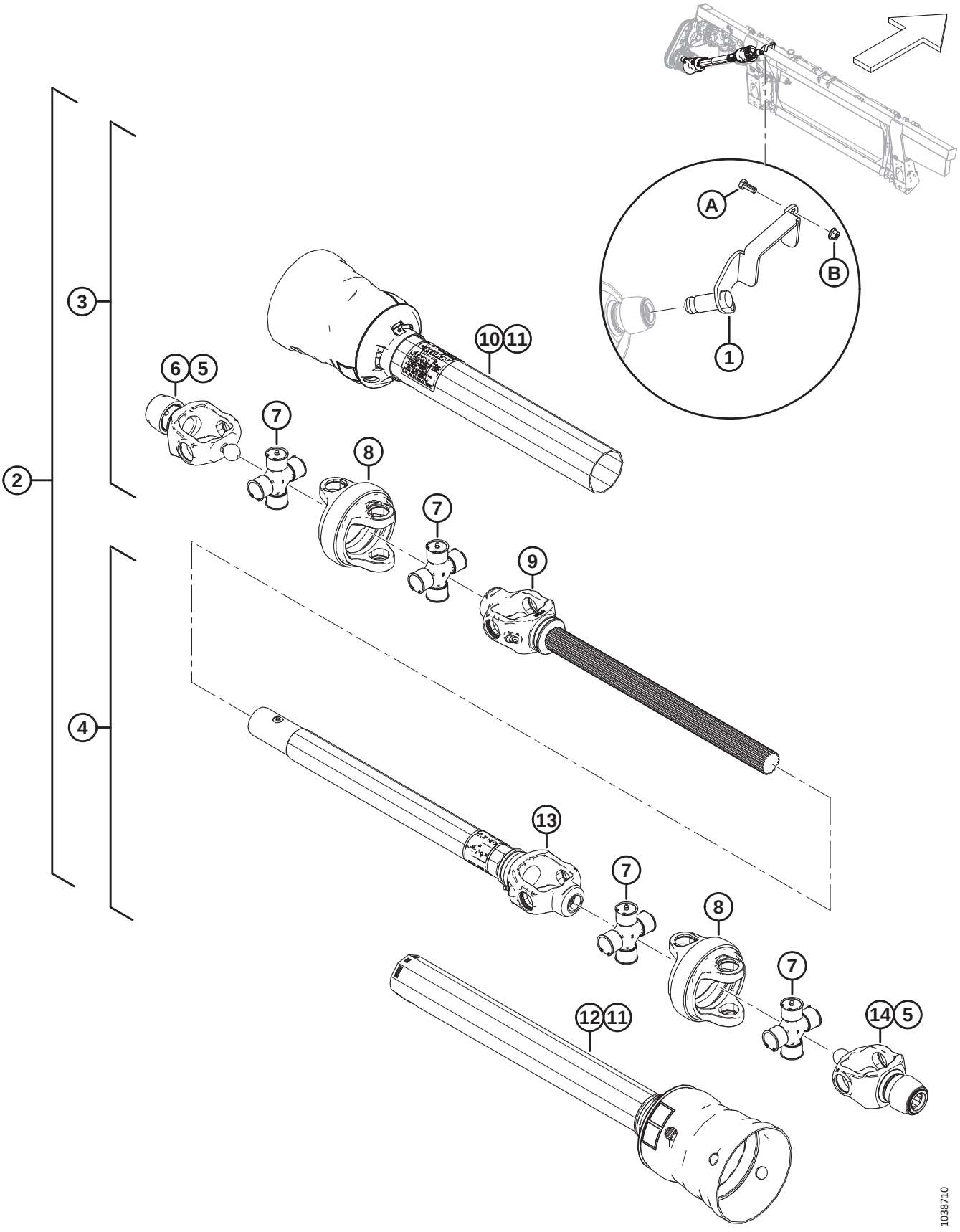

INPUT DRIVELINE AND SUPPORT – HIGH ANGLE

Ref	Part Number	Description	Qty	Serial Number
	30316	DECAL – DANGER		
	36651	DECAL – DANGER		
A	30627	BOLT – HEX HD TFL M10 X 1.5 X 25-8.8-A3L		
B	135799	NUT – HEX FLG CTR LOC M10 X 1.5-10		

158 Input Driveline Conversion Kits

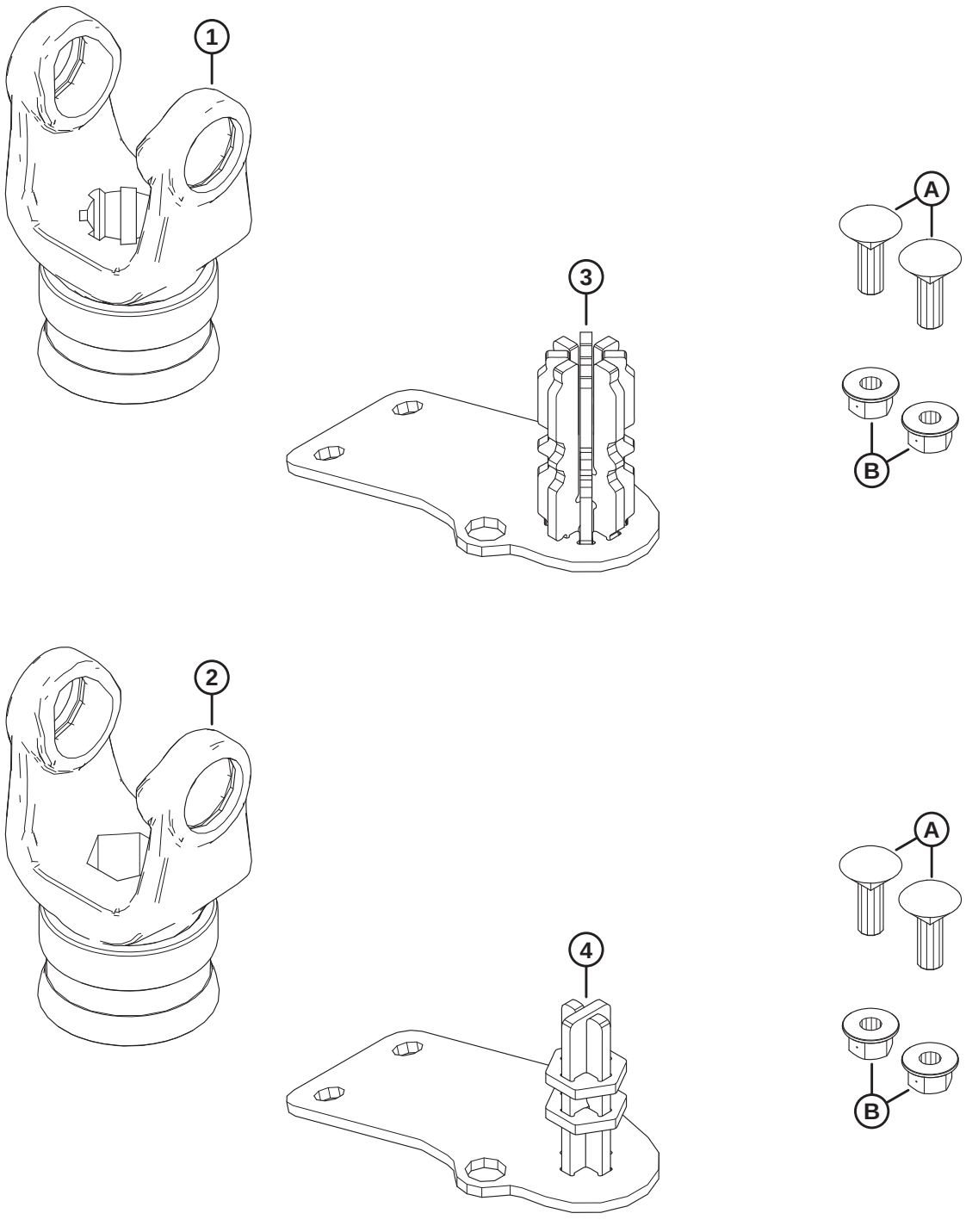

1039521

INPUT DRIVELINE CONVERSION KITS

Ref	Part Number	Description	Qty	Serial Number
	B7312	**KIT – 8T DRIVESHAFT FM200 CONV** [447]		
	B7317	**KIT – HEX DRIVESHAFT FM200 CONV** [447]		
1	**314657**	**YOKE – 8T** [448]	**1**	
2	**133641**	**YOKE – HEX** [449]	**1**	
3	**337117**	**STORAGE WELDT – 8T** [448]	**1**	
4	**347722**	**STORAGE WELDT – HEX** [449]	**1**	
A	**184662**	**BOLT – RHSN TFL M10 X 1.5 X 30-8.8-AA1J**		
B	**135799**	**NUT – HEX FLG CTR LOC M10 X 1.5-10**		

447. Kits are available through Whole Goods only.
448. Included in 8-tooth spline driveshaft conversion kit (MD #B7312).
449. Included in hex driveshaft conversion kit MD #B7317).

159 Auger Drum and Internal Components

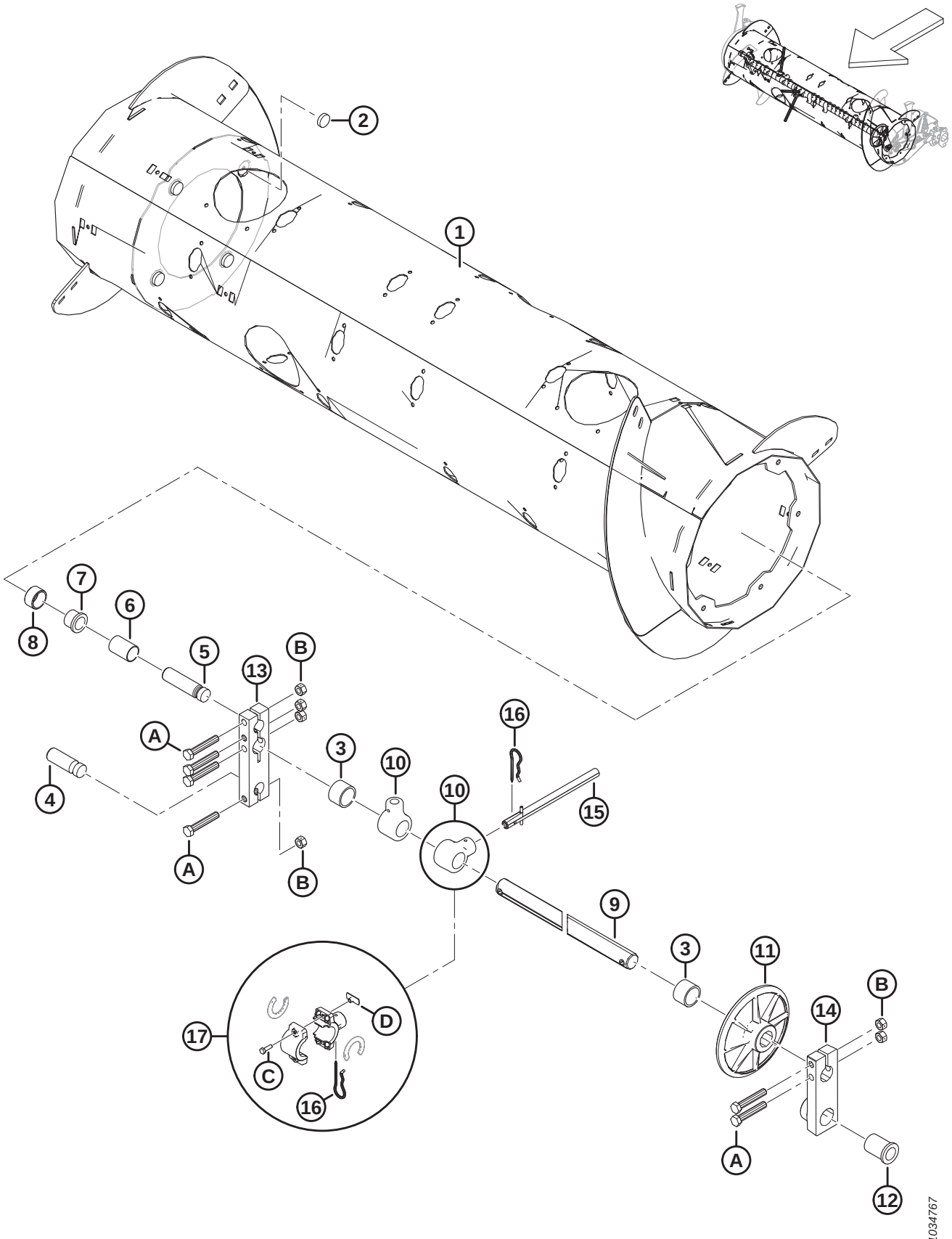

Ref	Part Number	Description	Qty	Serial Number
	322372	**ASSEMBLY – FEED AUGER** [450]		
1	322397	DRUM – WELDMENT	1	
2	328420	MAGNET – ROUND	4	
3	322770	SPACER TUBE – PLASTIC	2	
4	314062	PIN – PIVOT	1	
5	213660	PIN – PIVOT	1	
6	213657	SPACER	1	
7	133877	BUSHING – PLASTIC FLANGED 1.0 IN.	1	
8	213656	ROLLER	1	
9	308536	SHAFT – FINGER	1	
10	337206	HOLDER – AUGER FINGER	30	
11	248117	WHEEL, GUIDE – FINGERSHAFT	1	
12	248145	BUSHING – FLANGE	1	
13	213608	BLOCK – AUGER SHAFT	1	
14	248538	CASTING – PIVOT BLK, LH, MACH	1	
15	337152	KIT – FINGER [451]	22	
	7642	PIN – SPRING 3/16 DIA X 1.5 LG	A/R	
16	123180	PIN – HAIR	22	
17	276839	KIT – FINGER HOLDER SPLIT 5X (BAG OF 5) [452]	A/R	
A	184675	BOLT – HEX HD M12 X 1.75 X 70-8.8-AA1J		
B	136759	NUT – HEX CTR LOC M12 X 1.75-8-AA1J		
C	252703	BOLT – HEX HD TFL M6 X 1 X 20 X SPCL-12.9-AF0C		
D	197263	NUT – TEE M6 X 1		

450. The complete feed auger assembly includes all listed parts in Section *159 Auger Drum and Internal Components, page 385*, Section *160 Auger Assembly – Right Arm, page 387*, and Section *161 Auger Assembly – Left Arm, page 391*.
451. The finger kit includes solid finger (not sold separately), spring pin (MD #7642), guide (MD #337143), and instructions.
452. The split finger holder kit is used to simplify field replacement of broken one-piece solid finger holders (MD #337206). The kit includes set of five split auger finger holders (NSS), holder spacers (NSS), hair pins (MD #123180), tee nuts (MD #197263), and bolts (MD #252703).

160 Auger Assembly – Right Arm

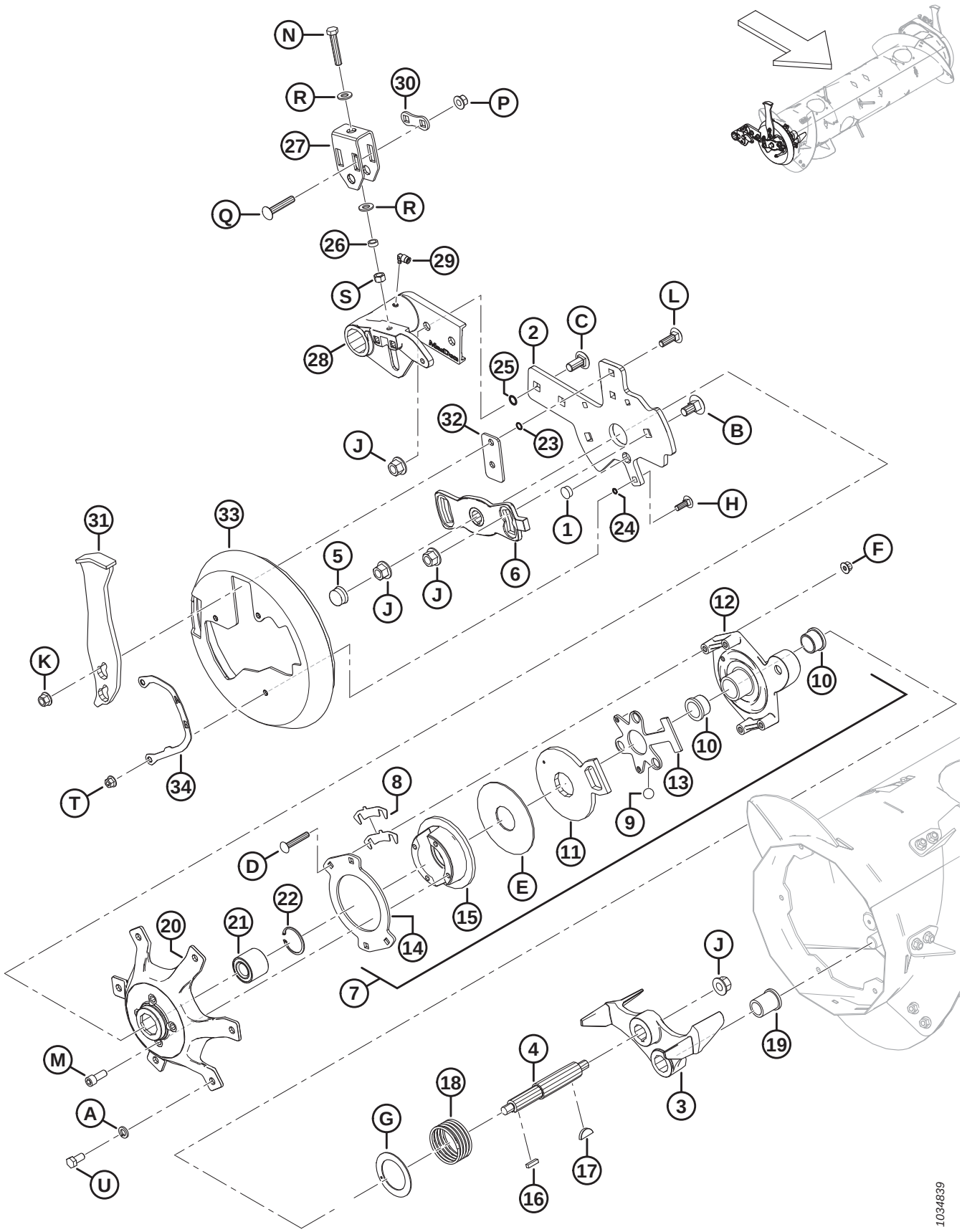

AUGER ASSEMBLY – RIGHT ARM

Ref	Part Number	Description	Qty	Serial Number
1	308859	PLUG – HOLE	1	
2	308850	BAR – RH AUGER SUPPORT	1	
3	304520	CASTING – STOP, MACHINING	1	
4	304514	SHAFT – AUGER	1	
5	276140	CAP – PLASTIC	1	
6	213851	CASTING – TIMING PLATE, MACH	1	
7	213802	ASSEMBLY – REVERSING CLUTCH [453]	1	
8	276206	SHIM CLUTCH	4	
9	248285	BALL	3	
10	213859	BUSHING – PLASTIC 1.25 X 1.5 X 1.0	2	
11	213801	ARM, CLUTCH ACTIVATOR – MACH	1	
12	213649	CAST, CLUTCH HOUSING – MACH	1	
13	337124	PLATE – BALL CAGE	1	
14	213554	DISC – CLUTCH	1	
15	213552	DISC, BRAKE – MACHINING	1	
16	213750	KEY, RECT – 6.35 MM SQ 25.5 MM LG	1	
17	213654	KEY – WOODRUFF 1/4 X 1-1/4	1	
18	213679	SPRING – COMPRESSION	1	
19	213659	BUSHING – FLANGE	1	
20	213546	HUB MACHINING RH	1	
21	337284	BEARING – DOUBLE ROW BALL, 52MM OD	1	
22	21235	RING – INT RETAINING	1	
23	183508	O-RING – 1.78 X 10.82	2	
24	183506	O-RING – 1.78 X 7.65	3	
25	50083	O-RING – Ø2.62 X Ø13.94	2	
26	314169	SPACER	1	
27	314136	BRACKET – ADJUSTER	1	
28	308538	PIVOT – LH AUGER, MACHINING	1	
29	301427	FITTING – QUICK DC, 90 DEG	1	
30	187428	SPACER	1	
31	308648	BUMPER – WELDMENT	1	
32	308056	PLATE – SPACER	1	
33	301994	COVER – AUGER END CAP RH	1	
34	276180	PLATE – INDICATOR RH	1	
A	18638	WASHER – REG. LOCK 1/2 IN. NOM. ID AA1J		
B	252691	BOLT – RHSN M16 X 2 X 35-10.9-AA1J		
C	252638	BOLT – RHSSN M16 X 2 X 35-8.8-AA1J		
D	252701	BOLT – RHSSN TFL M10 X 1.5 X 60-8.8-AA1J		
E	213731	WASHER – PLASTIC		
F	135799	NUT – HEX FLG CTR LOC M10 X 1.5-10		
G	213733	WASHER – THRUST		
H	184662	BOLT – RHSN TFL M10 X 1.5 X 30-8.8-AA1J		

453. The reversing clutch assembly includes parts #8–15 and hardware (MD #252701, MD #213731, and MD #135799).

AUGER ASSEMBLY – RIGHT ARM

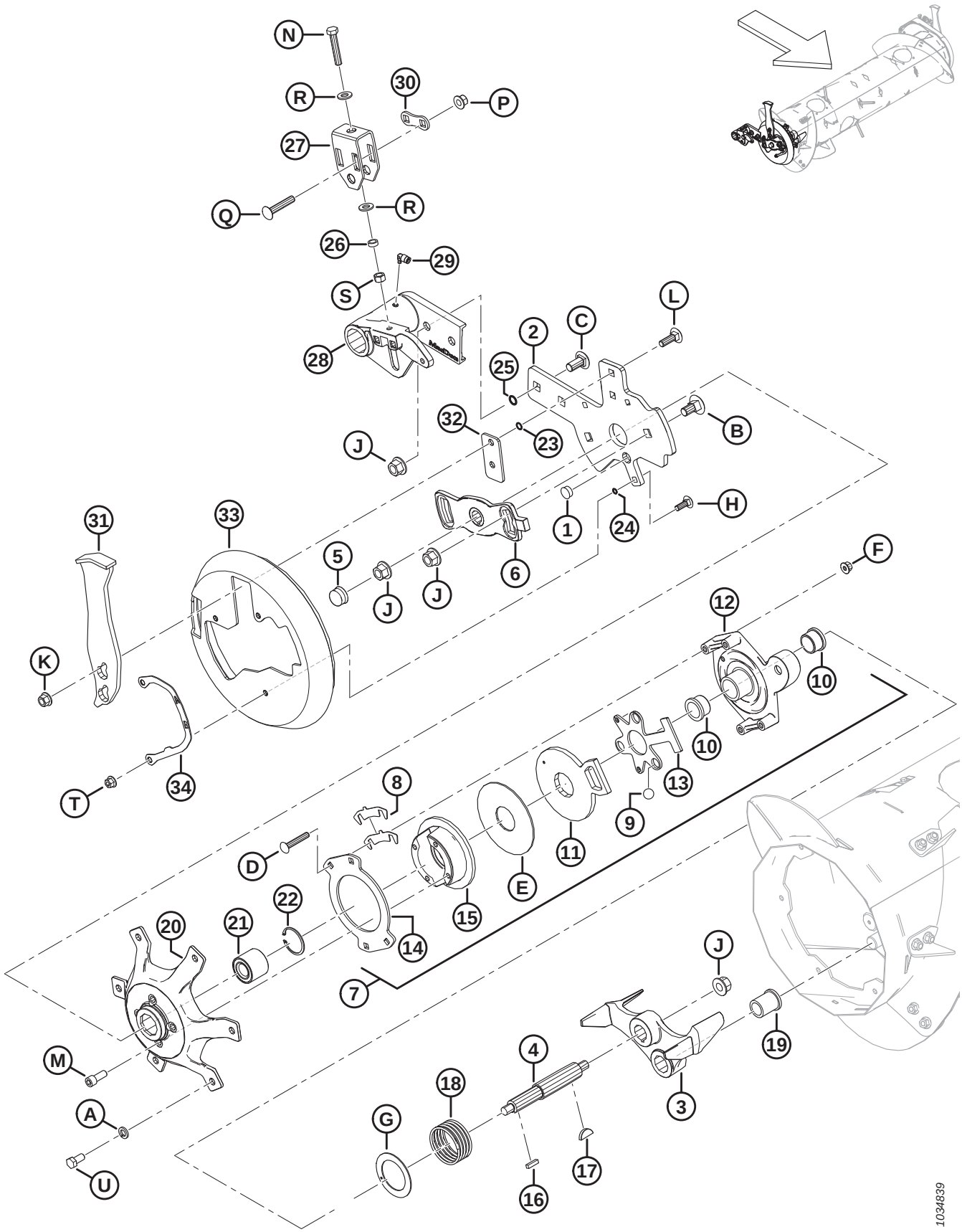

Ref	Part Number	Description	Qty	Serial Number
J	136440	NUT – HEX FLG CTR LK M16 X 2-10-AA1J		
K	136431	NUT – HEX FLG CTR LOC M12 X 1.75-10		
L	135900	BOLT – RHSN TFL M12 X 1.75 X 40-8.8-ZINC		
M	50154	SCREW – HEX SOC HD TFL M12 X 1.75 X 30-8.8-AA1J		
N	252541	BOLT – HEX HD TFL M12 X 1.75 X 65-8.8-AA3L		
P	252188	NUT – HEX FLG CTR LK M12 X 1.5-10-AA1J		
Q	252187	BOLT – RHSSN M12 X 1.5 X 65-10.9-AA1J		
R	135369	WASHER – HARDENED ASTM F436 1/2		
S	135156	NUT – HEX M12 X 1.75-10-AA1J		
T	136441	NUT – HEX SER FLG M10 X 1.5-8-AA1J		
U	50155	BOLT – HEX HD TFL M12 X 1.75 X 25-8.8-AA1J		

161 Auger Assembly – Left Arm

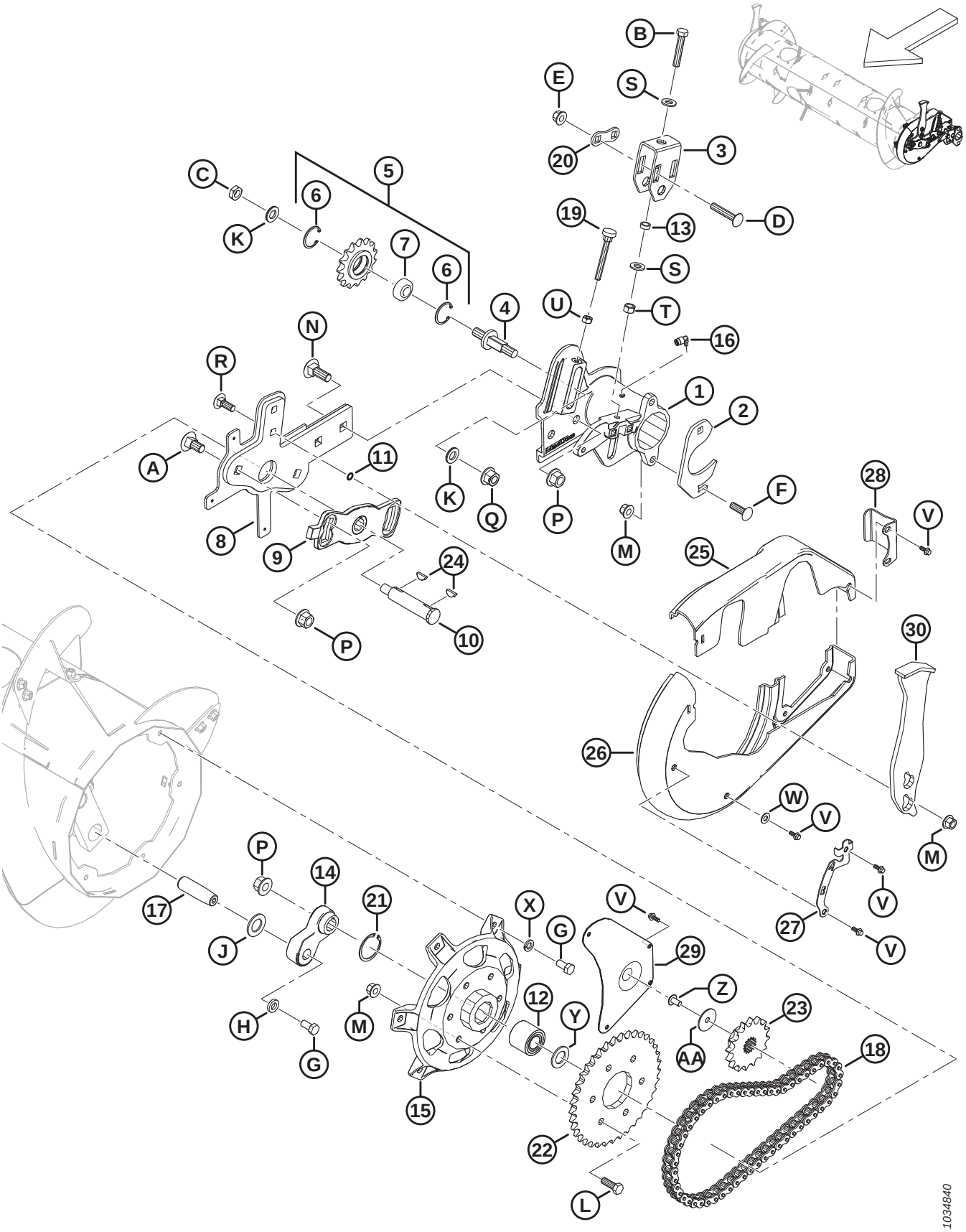

AUGER ASSEMBLY – LEFT ARM

Ref	Part Number	Description	Qty	Serial Number
1	322377	PIVOT – LH AUGER, MACHINING	1	
2	248388	CLAMP – PLATE	1	
3	314136	BRACKET – ADJUSTER	1	
4	213420	SPINDLE – THREADED ADJUSTMENT	1	
5	9333	ASSEMBLY – SPROCKET [454]	1	
6	795	RING – RETAINING	2	
7	9213	BEARING – BALL	1	
8	304931	ARM – LH AUGER SUPPORT WELDT	1	
9	213851	CASTING – TIMING PLATE, MACH	1	
10	301441	SHAFT – AUGER	1	
11	183508	O-RING – 1.78 X 10.82	2	
12	337284	BEARING – BALL DBL ROW 52 MM O.D. [455]	1	
	337804	KIT – LH RTD HUB WITH BEARING [456]	A/R	
13	314169	SPACER	1	
14	304521	ARM – FINGER SHAFT CRANK MACH	1	
15	337276	HUB – MACHINING [455]	1	
	337804	KIT – LH RTD HUB WITH BEARING [456]	A/R	
16	301427	FITTING – QUICK DC, 90 DEG	1	
17	248144	PIN – PIVOT	1	
18	220317	CHAIN – RC-60H, 56 PITCHES RIVETED, ENDLESS	1	
19	213857	THUMBSCREW – M10 X 80	1	
20	187428	SPACER	1	
21	21235	RING – INT. RETAINING (2021 AND LATER) [455]	1	
	181649	RING – RETAINING INTERNAL (2020 AND PRIOR) [457]	A/R	
22	151793	SPROCKET – RC 60 A 37 T	1	
23	151691	SPROCKET – RC 60 B 16 T	1	
24	135290	KEY – WOODRUFF(1/4 X 7/8 NOM.)	2	
25	301993	COVER – LH AUGER, SMALL HALF	1	
26	301992	COVER – LH AUGER, LARGE HALF	1	
27	276183	PLATE – INDICATOR LH	1	
28	213112	PLATE – COVER RETAINER	1	
29	213110	PANEL – ACCESS	1	
30	308648	BUMPER – WELDMENT	1	
A	252691	BOLT – RHSN M16 X 2 X 35-10.9-AA1J		
B	252541	BOLT – HEX HD TFL M12 X 1.75 X 65-8.8-AA3L		
C	252288	NUT – HEX THIN FINE M16 X 1.5-04-AA1J		
D	252187	BOLT – RHSSN M12 X 1.5 X 65-10.9-AA1J		
E	252188	NUT – HEX FLG CTR LK M12 X 1.5-10-AA1J		
F	197122	BOLT – RHSSN M12 X 1.75 X 40-8.8-AA1J		

454. The sprocket assembly includes sprocket (NSS), ball bearing (MD #9213), and two retaining rings (MD #795).
455. For model year 2021 and later.
456. Kit is used to service machines made prior to model year 2021. The kit includes hub (MD #337276), bearing (MD #337284), retaining ring (MD #21235), flat washer (MD #123406), and instructions.
457. Retaining ring (MD #181649) is used to service machines made prior to model year 2021.

AUGER ASSEMBLY – LEFT ARM

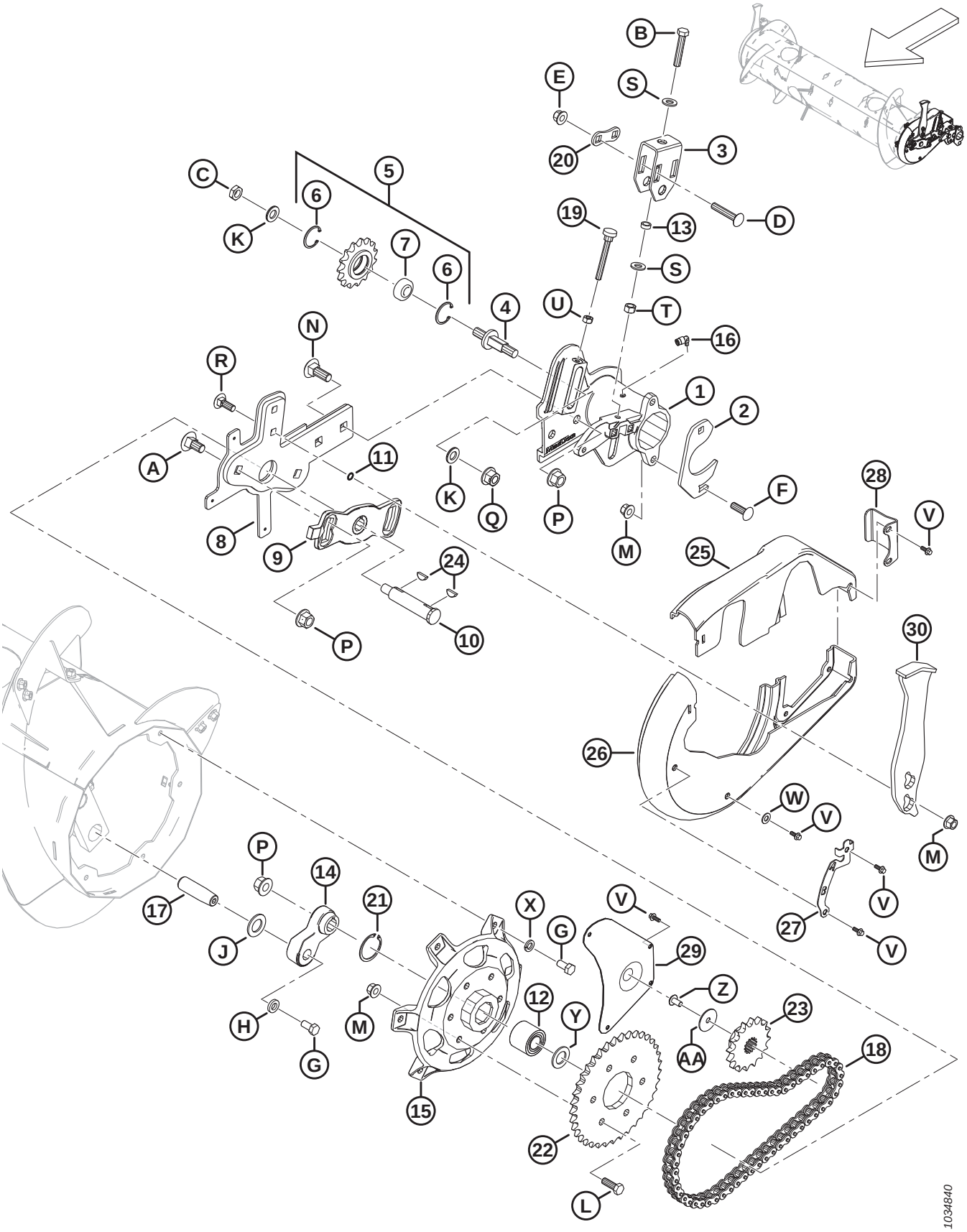

AUGER ASSEMBLY – LEFT ARM

Ref	Part Number	Description	Qty	Serial Number
G	50155	BOLT – HEX HD TFL M12 X 1.75 X 25-8.8-AA1J		
H	187518	WASHER – FLAT		
J	156743	WASHER – FLAT		
K	172558	WASHER – NORDLOCK 5/8 IN.		
L	152730	BOLT – HEX HD TFL M12 X 1.75 X 35-10.9-AA1J		
M	136431	NUT – HEX FLG CTR LOC M12 X 1.75-10		
N	136757	BOLT – RHSN M16 X 2 X 45-8.8-AAJ1		
P	136440	NUT – HEX FLG CTR LK M16 X 2-10-AA1J		
Q	136736	NUT – HEX FLG TOP LOCK M16 X 1.5-10-AA2L		
R	136291	BOLT – RHSN TFL M12 X 1.75 X 35-8.8-ZINC		
S	135369	WASHER – HARDENED ASTM F436 1/2		
T	135156	NUT – HEX M12 X 1.75-10-AA1J		
U	30505	NUT – HEX M10 X 1.5-10-AA1J		
V	252639	BOLT – HEX FLG HD M6 X 1 X 16 X SPCL-8.8-AA2L		
W	18598	WASHER – FLAT SAE 13/32 ID X 13/16 IN OD AA1J		
X	18638	WASHER – REG. LOCK 1/2 IN. NOM. ID AA1J		
Y	123406	WASHER – FLAT [455]		
Z	135157	SCREW – MACHINE		
AA	31465	WASHER – FLAT		

162 Auger – Float Linkage

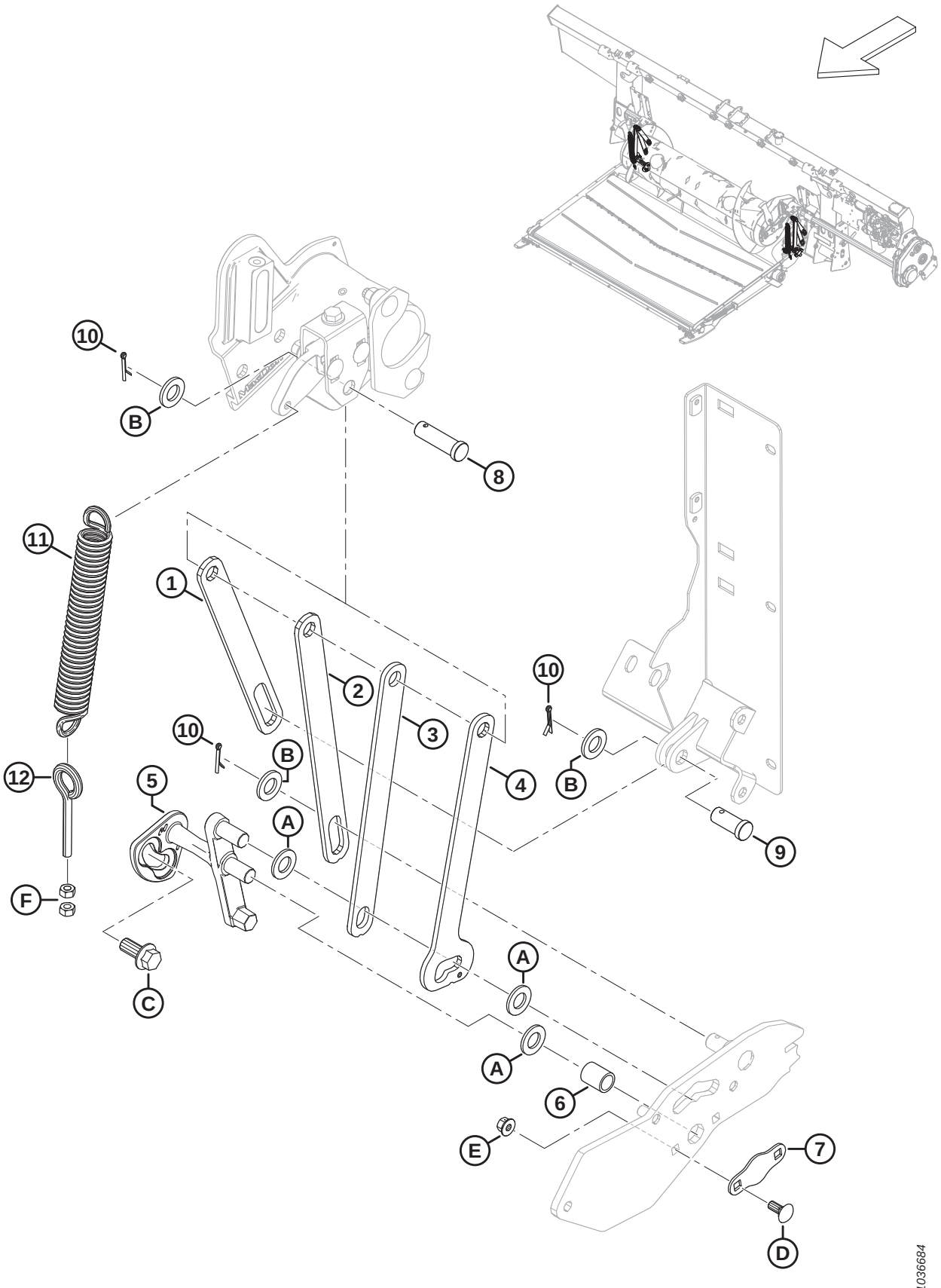

AUGER – FLOAT LINKAGE

Ref	Part Number	Description	Qty	Serial Number
1	322914	BAR – AUGER SUPPORT, LIMITER	2	
2	301805	BAR – AUGER SUPPORT, REAR	2	
3	301806	BAR – AUGER SUPPORT, FRONT	2	
4	301807	BAR – AUGER SUPPORT DUAL POSITION	2	
5	337362	LEVER – LH CRANK LOCK, MACHINED	1	
	337366	LEVER – RH CRANK LOCK, MACHINED	1	
6	248348	TUBE – SPACER	2	
7	248349	PLATE – SECURING	2	
8	322970	PIN – CLEVIS, 50 MM LG	2	
9	11814	PIN – CLEVIS, 30 MM LG	2	
10	18648	PIN – COTTER 3/16 DIA X 1.25 ZP	6	
11	245966	SPRING – EXTENSION	2	
12	231448	EYE BOLT – M10 X 1.5 X 70-4.8-AA1J	2	
A	18601	WASHER – FLAT SAE		
B	112130	WASHER – HARD ASTM F436 3/4 IN. NOM. ID AB0C		
C	136378	BOLT – HEX FLG HD TFL M16 X 2 X 35-10.9		
D	135785	BOLT – RHSN M10 X 1.5 X 25-8.8-AA1J		
E	135799	NUT – HEX FLG CTR LOC M10 X 1.5-10		
F	30505	NUT – HEX M10 X 1.5-10-AA1J		

163 Auger Completion

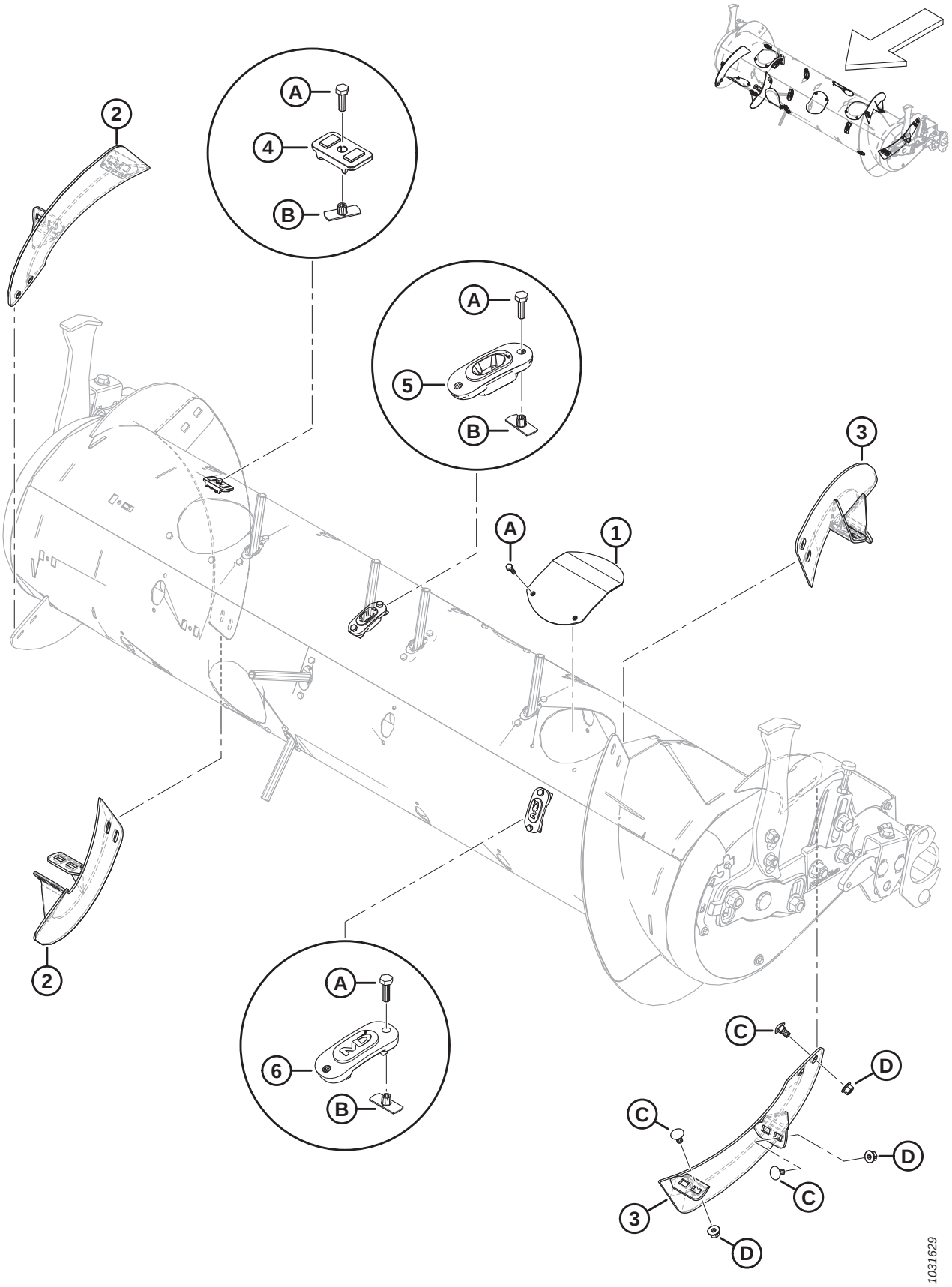

AUGER COMPLETION

Ref	Part Number	Description	Qty	Serial Number
1	304494	COVER WELDMENT	6	
2	287887	FLIGHTING – RH, MEDIUM, HIWEAR	2	
3	287888	FLIGHTING – LH, MEDIUM, HIWEAR	2	
4	213084	PLUG – FLIGHTING SLOT	4	
5	337143	GUIDE	22	
6	187137	PLUG	8	
A	252703	BOLT – HEX HD TFL M6 X 1 X 20 X SPCL-12.9-AF0C		
B	197263	NUT – TEE M6 X 1		
C	136178	BOLT – RHSN M10 X 1.5 X 20-8.8-AA1J		
D	135799	NUT – HEX FLG CTR LOC M10 X 1.5-10		

164 Auger Conversion Kits – Fingers and Flighting

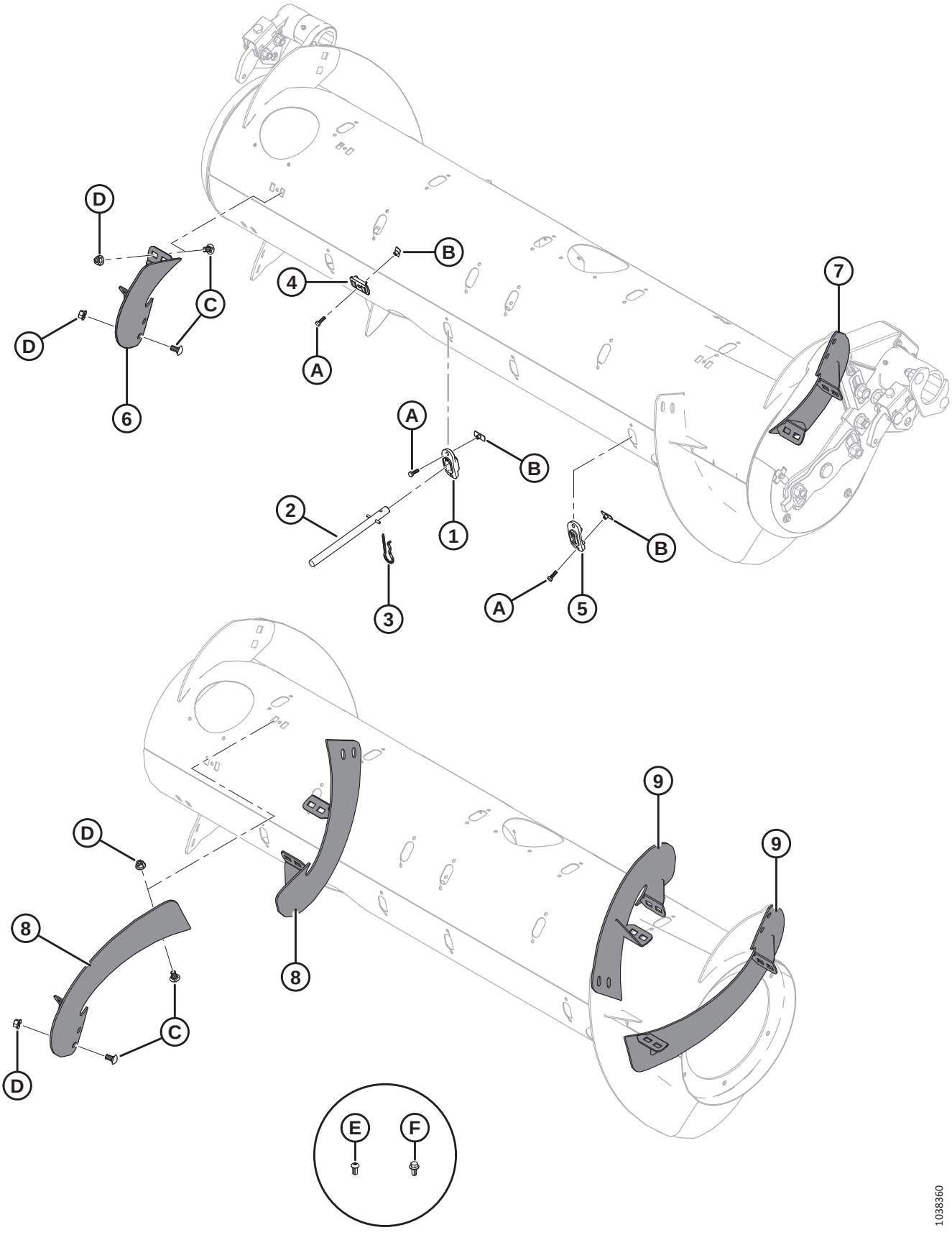

Ref	Part Number	Description	Qty	Serial Number
	B7343	KIT – FEED AUGER FINGERS, 4 PCS [458]		
	B7344	KIT – FLIGHTING, SHORT HI-WEAR [459]		
	B7345	KIT – FLIGHTING, LONG HI-WEAR [460]		
	357233	KIT – FLIGHTING, SHORT HI-WEAR [461]		
	357234	KIT – FLIGHTING, LONG HI-WEAR [462]		
1	337143	GUIDE	4	
2	337152	KIT – FINGER [463]	4	
3	123180	PIN – HAIR	4	
4	213084	PLUG – FLIGHTING SLOT	4	
5	187137	PLUG [464]		
6	287887	FLIGHTING, RTD – RH, MED (HI WEAR)	1	
7	287888	FLIGHTING, RTD – LH, MED (HI WEAR)	1	
8	287890	FLIGHTING, RTD – RH, LONG(HI WEAR)	2	
9	287889	FLIGHTING, RTD – LH, LONG(HI WEAR)	2	
A	252703	BOLT – HEX HD TFL M6 X 1 X 20 X SPCL-12.9-AA2L		
B	197263	NUT – TEE M6 X 1		
C	136178	BOLT – RHSN M10 X 1.5 X 20-8.8-AA1J		
D	135799	NUT – HEX FLG CTR LOC M10 X 1.5-10-A3L		
E	135723	SCREW – HEX SOC BTN HD M10 X 1.5 X 20-10.9-AA1J [465]		
F	152655	BOLT – HEX FLG HD M10 X 1.5 X 20-8.8-AA1J [466]		

458. Includes four solid fingers (MD #337152), guides (MD #337143), hair pins (MD #123180), flighting slots plugs (MD #213084), and hardware. Kits are available through Whole Goods only.
459. Includes one pair of short flighting (MD #287887 and MD #287888), four flighting slots plugs (MD #213084), four plugs (MD #187137), and hardware. Kits are available through Whole Goods only.
460. Includes two pairs of long flighting (MD #287889 and MD #287890), twelve plugs (MD #187137), and hardware. Kits are available through Whole Goods only.
461. Includes one pair of short flighting (MD #287887 and MD #287888), four flighting slots plugs (MD #213084), four plugs (MD #187137), hardware, and instructions.
462. Includes two pairs of long flighting (MD #287889 and MD #287890), twelve plugs (MD #187137), hardware, and instructions.
463. Includes solid finger (not sold separately), spring pin (MD #7642), guide (MD #337143), and instructions.
464. Quantities: B7344 = 4; B7345 = 12
465. For Ultra Narrow Configuration only; used on the new holes drilled in the flighting.
466. For Ultra Narrow Configuration only; used on the new holes drilled in the feed auger.

165 Auger – Grease Lines

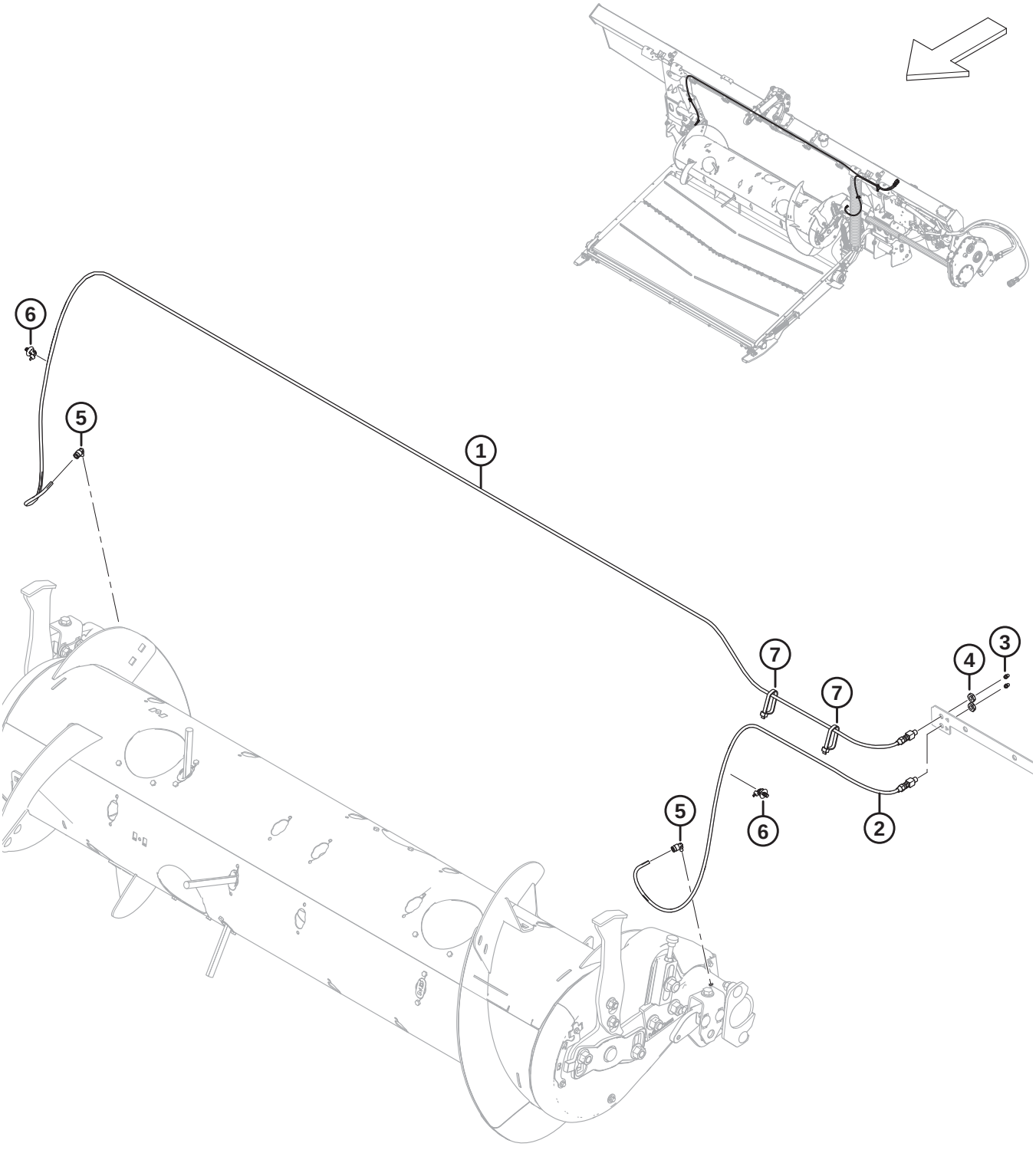

AUGER – GREASE LINES

Ref	Part Number	Description	Qty	Serial Number
1	322961	GREASE LINE – 3170 MM LG [467]	1	
2	322962	GREASE LINE – 1165 MM LG [467]	1	
3	18671	FITTING – LUBE 1/4 - 28 UNF	2	
4	320259	NUT – HEX 1/8-27 NPSM-SPCL-GR2-ZINC	2	
5	301427	FITTING – QUICK DC, 90°	2	
6	136655	FASTENER – FIR TREE MT W/ TIE	2	
7	30753	FASTENER – CABLE TIE, BLACK	2	

467. The grease line includes lube fitting (MD #18671) and hex nut (MD #320259).

166 Float Linkage and Float Setting and Measuring

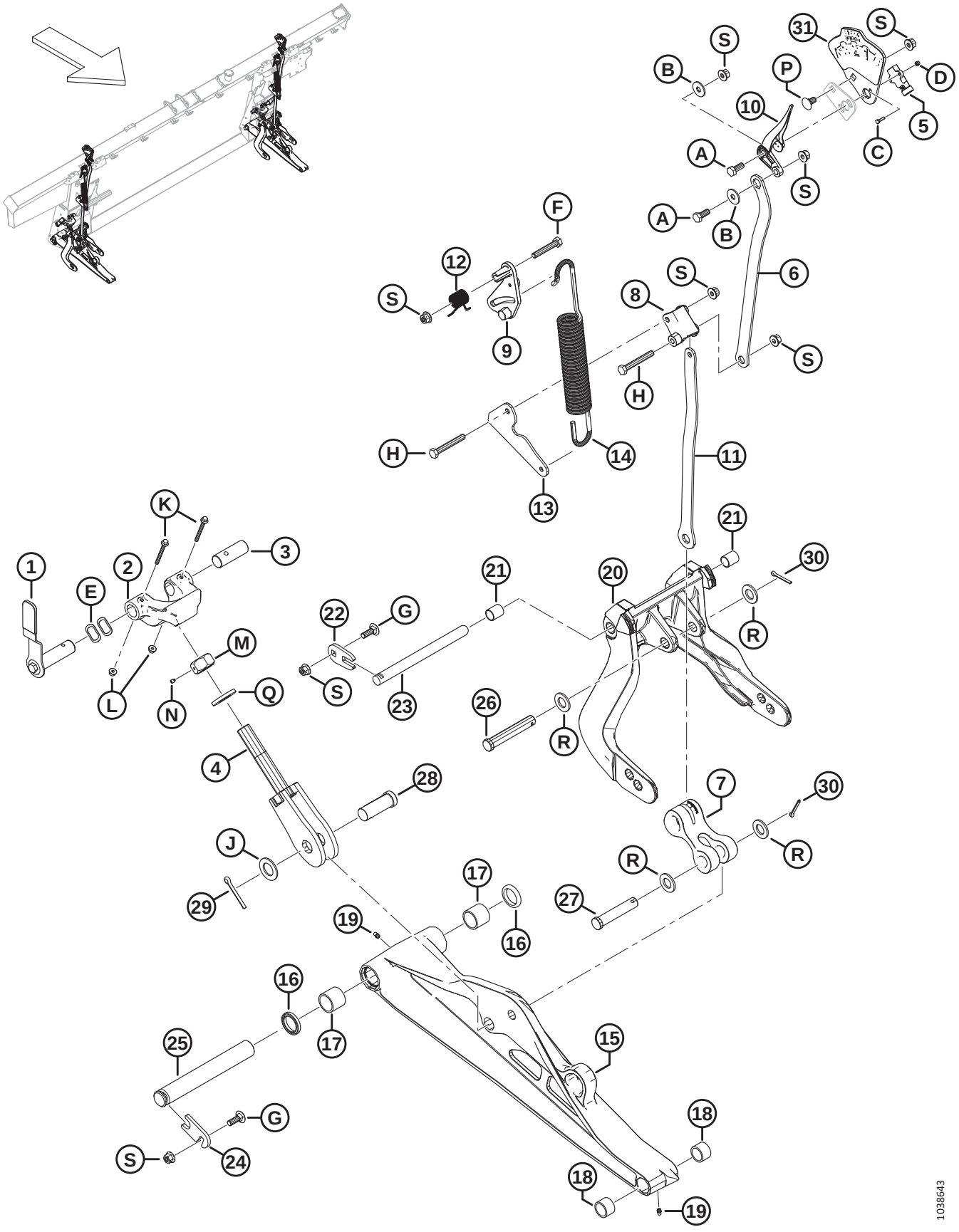

FLOAT LINKAGE AND FLOAT SETTING AND MEASURING

Ref	Part Number	Description	Qty	Serial Number
1	328538	HANDLE ASSY – FLOAT LOCK [468]	2	
	328491	GRIP – HANDLE	2	
2	301513	DOWNSTOP CASTING, MACHINED	2	
3	314276	PIN – PIVOT	2	
4	322219	BOLT – WELDMENT	2	
5	328412	SENSOR – ROTARY, 5V, CONTACTLESS	2	
6	337634	PLATE – TOP LINK	2	
7	328133	LINK – ARM	2	
8	337821	LEVER – FSM MACHINED	2	
9	322981	CASTING – FSM LEVER	2	
10	347923	INDICATOR NEEDLE	2	
11	337635	PLATE – BOTTOM LINK	2	
12	322046	SPRING – TORSION	2	
13	337636	PLATE – SPRING LINK	2	
14	322557	SPRING – EXTENSION	2	
15	322132	ASSY – LOWER LINK [469]	2	
16	113222	SEAL KIT [470]		
17	100500	BEARING – NEEDLE	4	
18	49904	BEARING – NEEDLE	4	
19	18671	FITTING – LUBE 1/4 - 28 UNF	4	
20	357492	ASSEMBLY – FLOAT LEVER [471]	2	
21	156501	BUSHING – PLASTIC	4	
22	301633	PLATE	2	
23	335144	PIN – PIVOT	2	
24	212250	PLATE – PIN LOCK	2	
25	248261	PIN	2	
26	156741	PIN – CLEVIS	2	
27	20312	PIN – CLEVIS	2	
28	135995	PIN – CLEVIS	2	
29	18609	PIN – COTTER 1/4 DIA X 2 ZP	2	
30	18608	PIN – COTTER 3/16 DIA X 1.5 ZP	4	
31	357455	PLATE – INDICATOR W/ DECAL [472]	2	
A	30627	BOLT – HEX HD TFL M10 X 1.5 X 25-8.8-A3L		
B	184712	WASHER – FLAT LARGE M10-200HV		
C	320389	SCREW – HEX SOC BTN HD M4 X 0.7 X 16-A2-SS		
D	320390	NUT – HEX NYLOC M4 X 0.7-8-A2-SS		
E	252564	WASHER – WAVE		
F	184664	BOLT – HEX HD M10 X 1.5 X 60-8.8-AA1J		

468. The handle assembly includes float lock handle (NSS), handle grip (MD #328491), float lock pin (NSS), and hardware (MD #30627, MD #184712).
469. The lower link assembly includes seal kit (MD #113222), two needle bearings (MD #100500), two needle bearings (MD #49904), and two lube fittings (MD #18671).
470. The seal kit includes one seal (NSS) and instructions.
471. The float lever assembly includes two plastic bushings (MD #156501).
472. The indicator plate assembly includes indicator plate (NSS), and float setting and measuring decal (MD #328142).

FLOAT LINKAGE AND FLOAT SETTING AND MEASURING

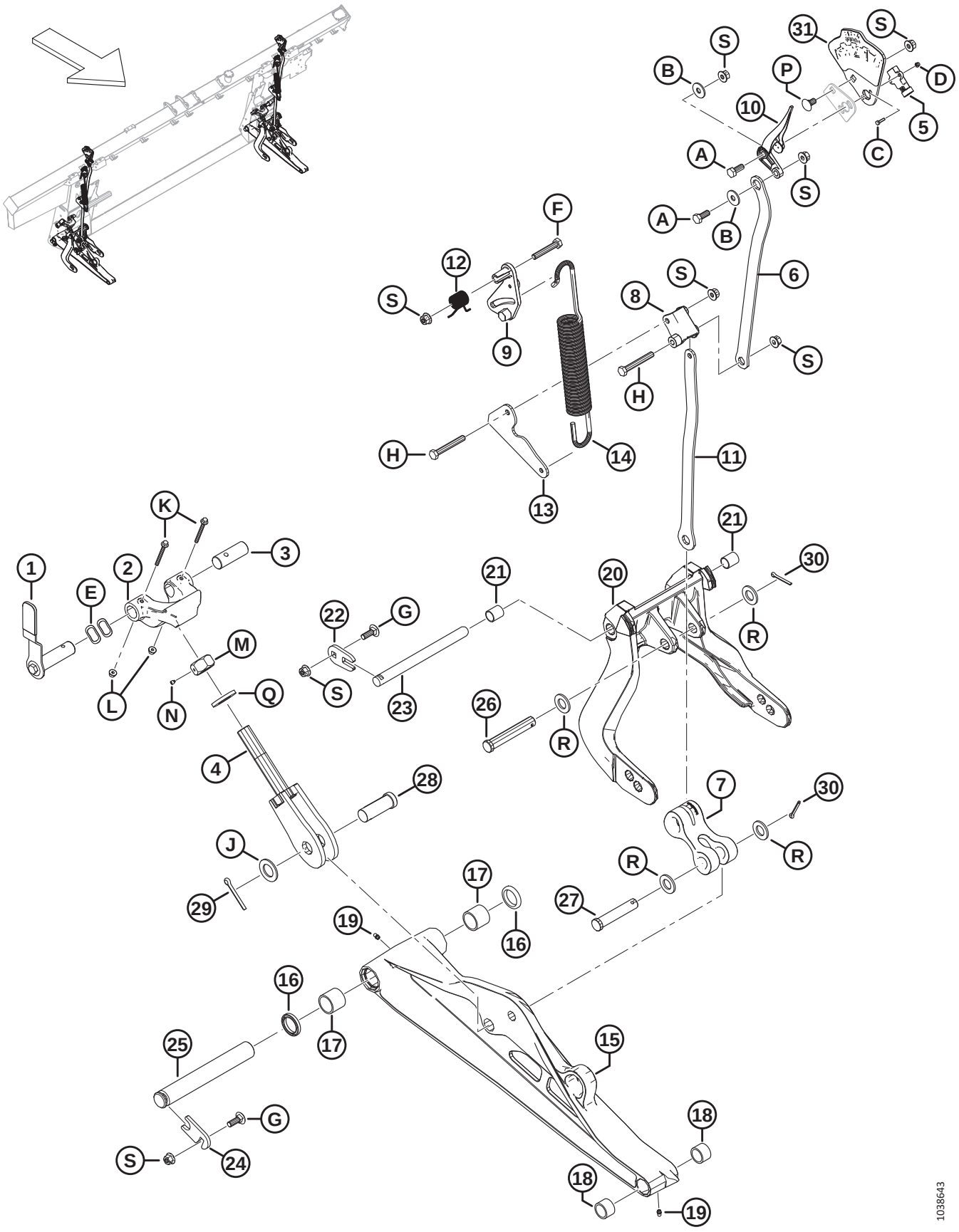

Ref	Part Number	Description	Qty	Serial Number
G	184662	BOLT – RHSN TFL M10 X 1.5 X 30-8.8-AA1J		
H	184659	BOLT – HEX HD M10 X 1.5 X 75-8.8-AA1J		
J	156743	WASHER – FLAT		
K	136704	BOLT – HEX FLG HD M6 X 1 X 60-8.8-AA2L		
L	152668	NUT – HEX FLG CTR LOC M6 X 1-8		
M	133047	NUT – DOWNSTOP MACHINING		
N	136596	SCREW – SET CUP POINT 1/4-20 X 1/4		
P	136178	BOLT – RHSN M10 X 1.5 X 20-8.8-AA1J		
Q	31774	WASHER – FLAT 1-1/8-30 HRC-AC0C		
R	18601	WASHER – FLAT SAE		
S	135799	NUT – HEX FLG CTR LOC M10 X 1.5-10		

167 Float Springs

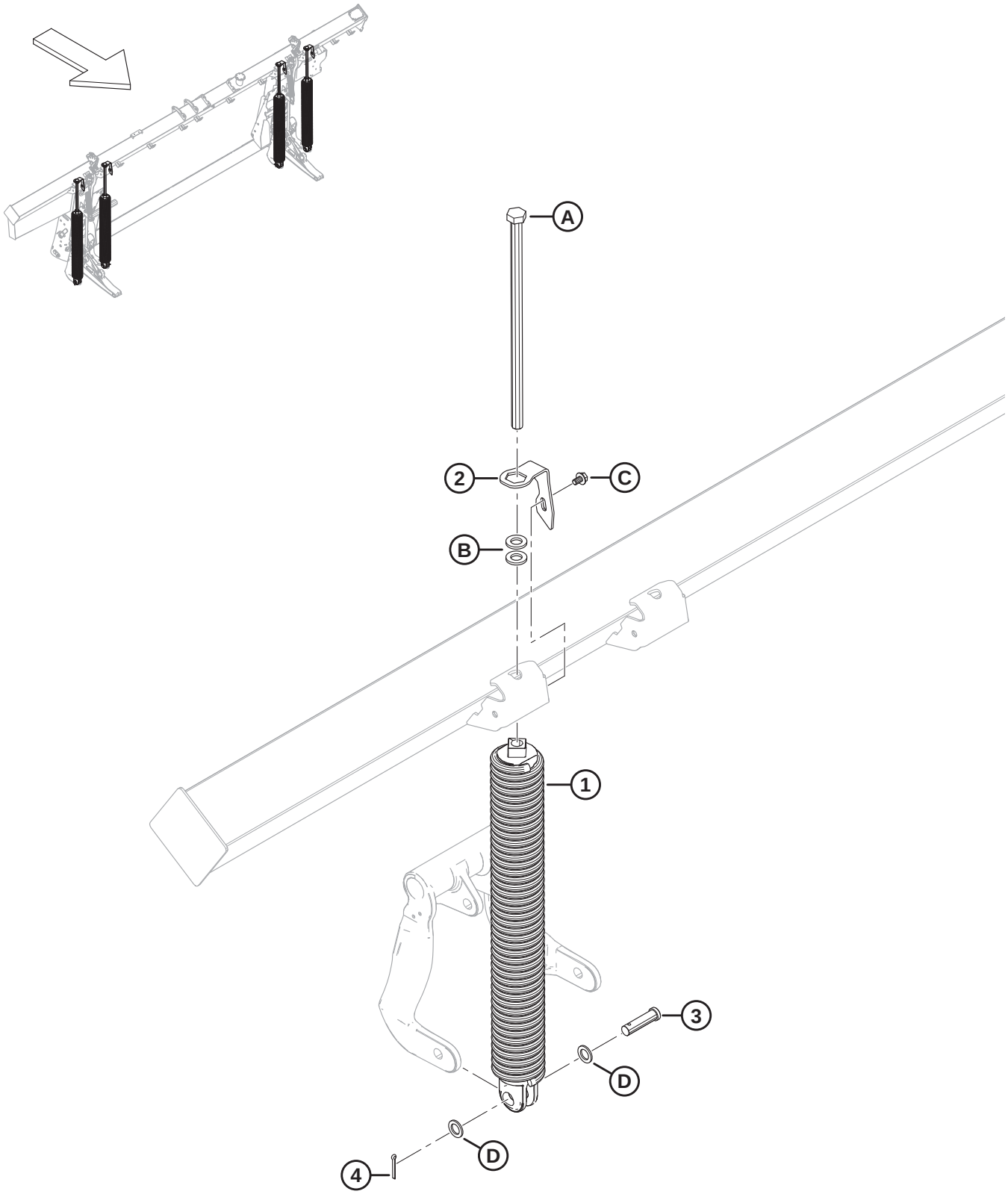

FLOAT SPRINGS

Ref	Part Number	Description	Qty	Serial Number
1	308878	SPRING – ASSEMBLY [473]		
	308879	SPRING – ASSEMBLY HEAVY [473]		
2	322668	LOCK – SPRING	4	
3	30463	PIN – CLEVIS	4	
4	18608	PIN – COTTER 3/16 DIA X 1.5 ZP	4	
A	136088	BOLT – HEX HD TFL M20 X 2.5 X 450 X SPCL-8.8-AA1J		
B	21540	WASHER – HARD ASTM F436 M20-340HV-AB2C		
C	136151	BOLT – HEX FLG HD TFL M10 X 1.5 X 16-8.8-AA1J		
D	1709	WASHER – FLAT		

473. There are four springs on each float module, but the combination of springs (MD #308878 and MD #308879) varies depending on header size. FD230 single-knife headers require 4 x 308878; FD235 single-knife and FD240 single-knife headers require 3 x 308878 and 1 x 308879 on the LH outboard side; FD235 double-knife, FD240 double-knife, and FD241 double-knife headers require 3 x 308878 and 1 x 308879 on the RH outboard side; FD245 double-knife headers require 2 x 308878 on the inboard sides and 2 x 308879 on the outboard sides; FD250 double-knife headers require 3 x 308879 and 1 x 308878 on the LH inboard side.

168 Float Module Attaching and Filler Components – FM200 to FD2 Series (2021 and Prior)

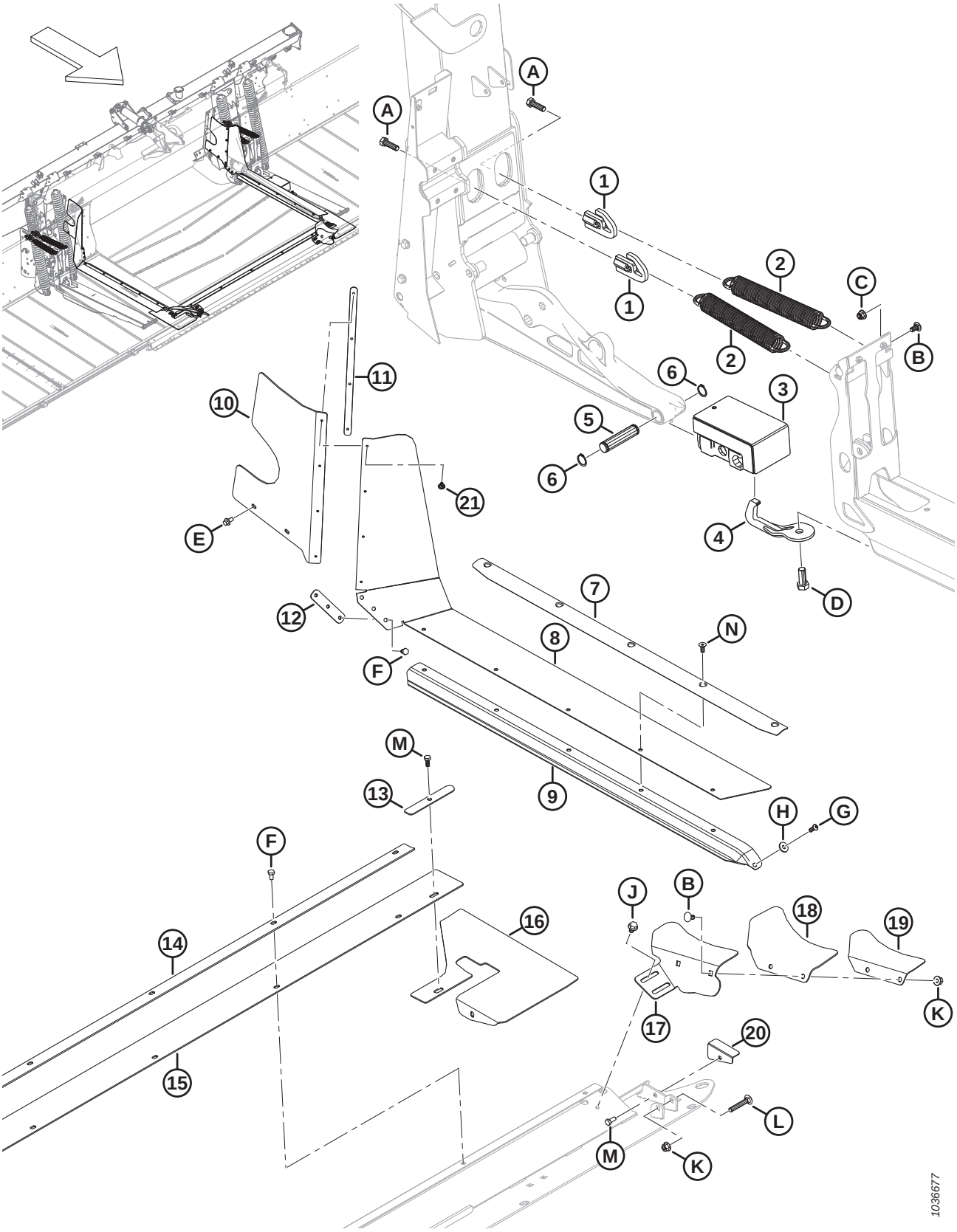

Ref	Part Number	Description	Qty	Serial Number
1	322676	TRIM SPRING TENSIONER – WELDT	4	–421189
2	340125	SPRING EXTENSION – HEADER TRIM	4	–421189
3	258703	RUBBER BLOCK FLEX – ASSY	2	–421189
4	258876	BREAKAWAY HOOK – WELDT	2	–421189
5	258318	PIN – PIVOT	2	–421189
6	18898	RING – EXT RETAINING	4	–421189
7	337407	RETAINER – SEAL AND FILLER	2	–421189
8	REF	FILLER – MID DECK SIDE FLEX [474]	2	–421189
	347963	KIT – MID FILLER UPPER [475]		–421189
9	REF	SEAL – DRAPER FEED DECK [476]	OPT	–421189
10	328348	FILLER – LH REAR UPPER	1	–421189
	328349	FILLER – RH REAR UPPER	1	–421189
11	276770	PLATE – FILLER RETAINER	2	–421189
12	213713	RETAINER – FILLER MACHINED	2	–421189
13	301127	PLATE – FILLER RETAINER	2	–421189
14	301126	RETAINER – CENTER FILLER	1	–421189
15	295261	FILLER – PAN CENTER	1	–421189
16	295992	FLAP – PAN CORNER FLEX	2	–421189
17	337457	SUPPORT – LH CORNER FILLER	1	–421189
	337463	SUPPORT – RH CORNER FILLER	1	–421189
18	304040	FLAP – CORNER FILLER	2	–421189
19	337456	RETAINER – LH CORNER FILLER	1	–421189
	337464	RETAINER – RH CORNER FILLER	1	–421189
20	276117	RETAINER – PAN FLAP LH	1	–421189
	276062	RETAINER – PAN FLAP RH	1	–421189
21	293053	RIVET – POP	8	–421189
A	184669	BOLT – HEX HD M12 X 1.75 X 40-8.8-AA1J		
B	184657	BOLT – RHSSN M10 X 1.5 X 20-8.8-AA1J		
C	252807	NUT – HEX FLANGE NYLOC M10 X 1.5-8-AA1J		
D	111528	BOLT – HEX HD TFL M16 X 2 X 40-8.8-AA1J		
E	136485	BOLT – HEX FLG HD TFL M8 X 1.25 X 16-8.8-AA1J		
F	50139	BOLT – HEX HD TFL M8 X 1.25 X 16-8.8-AA1J		
G	320176	SCREW – HEX SOC BTN HD M8 X 1.25 X 20-10.9-AA1J		
H	184709	WASHER – FLAT LARGE M8-200HV		
J	136231	BOLT – HEX SER FLG HD M10 X 1.5 X 16 X SPCL-8.8		
K	135799	NUT – HEX FLG CTR LOC M10 X 1.5-10		
L	136113	BOLT – RHSN M10 X 1.5 X 60-8.8-AA1J		

474. The single-piece mid filler has been superseded by a thicker two-piece filler. If replacing a single-piece mid filler, order mid filler kit (MD #347963). The kit includes all parts required for both the left and right sides of the float module: two mid fillers (MD #347500), two upper mid fillers (MD #347775), two retainer plates (MD #347778), and rivets (MD #293053).
475. Includes all parts required for both the left and right sides of the float module: two mid fillers (MD #347500), two upper mid fillers (MD #347775), two retainer plates (MD #347778), and rivets (MD #293053).
476. For service parts, refer to Section *212 (Option) FM200 Full Interface Filler – FD2 Series, page 515*.

FLOAT MODULE ATTACHING AND FILLER COMPONENTS – FM200 TO FD2 SERIES (2021 AND PRIOR)

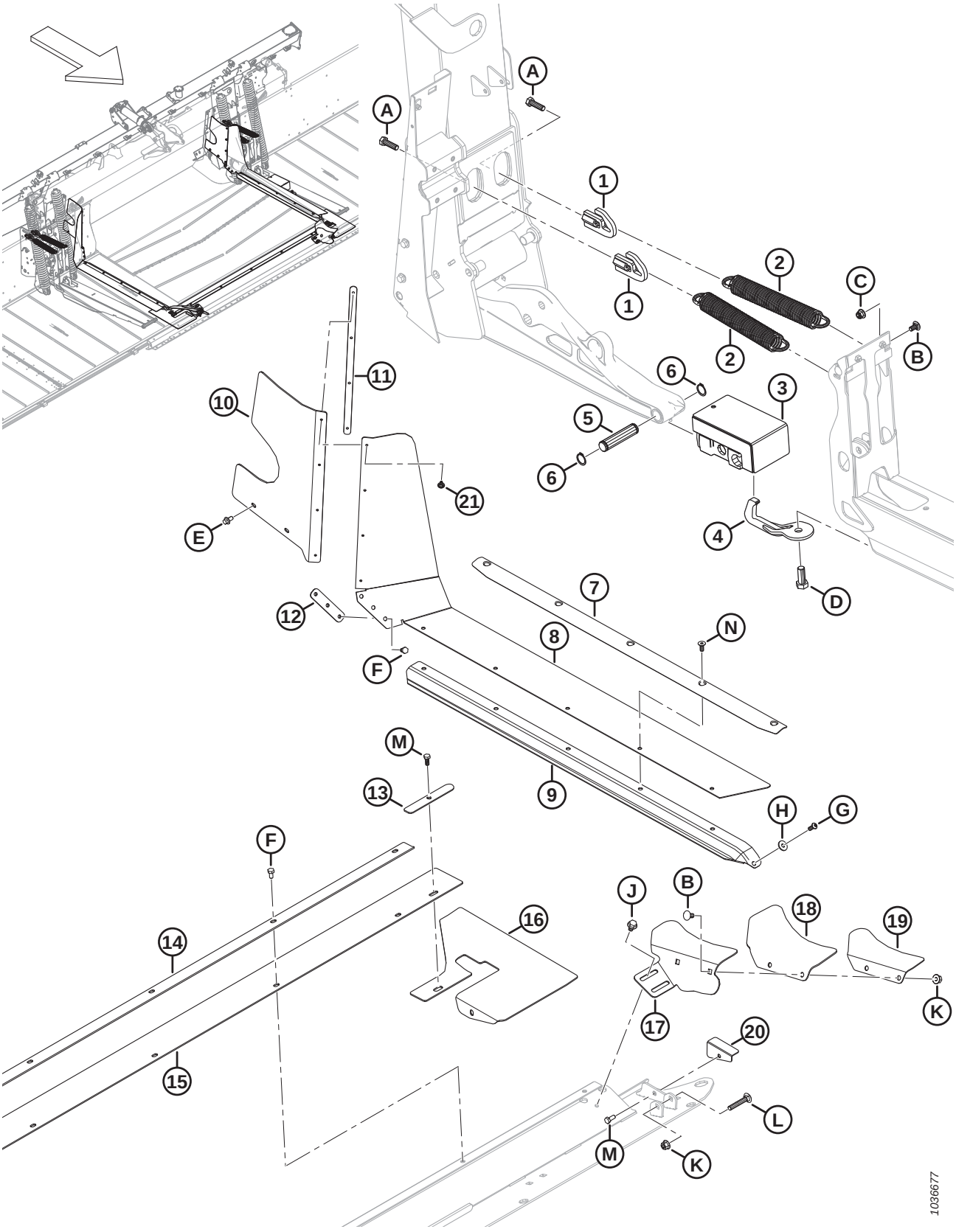

FLOAT MODULE ATTACHING AND FILLER COMPONENTS – FM200 TO FD2 SERIES (2021 AND PRIOR)

Ref	Part Number	Description	Qty	Serial Number
M	30715	BOLT – HEX HD TFL M8 X 1.25 X 20-8.8-AA1J		
N	136592	SCREW – HEX SOC CSK HD TFL M8 X 1.25 X 20-8.8-ZINC		

169 Float Module Attaching and Filler Components – FM200 to FD2 Series (2022 and Later)

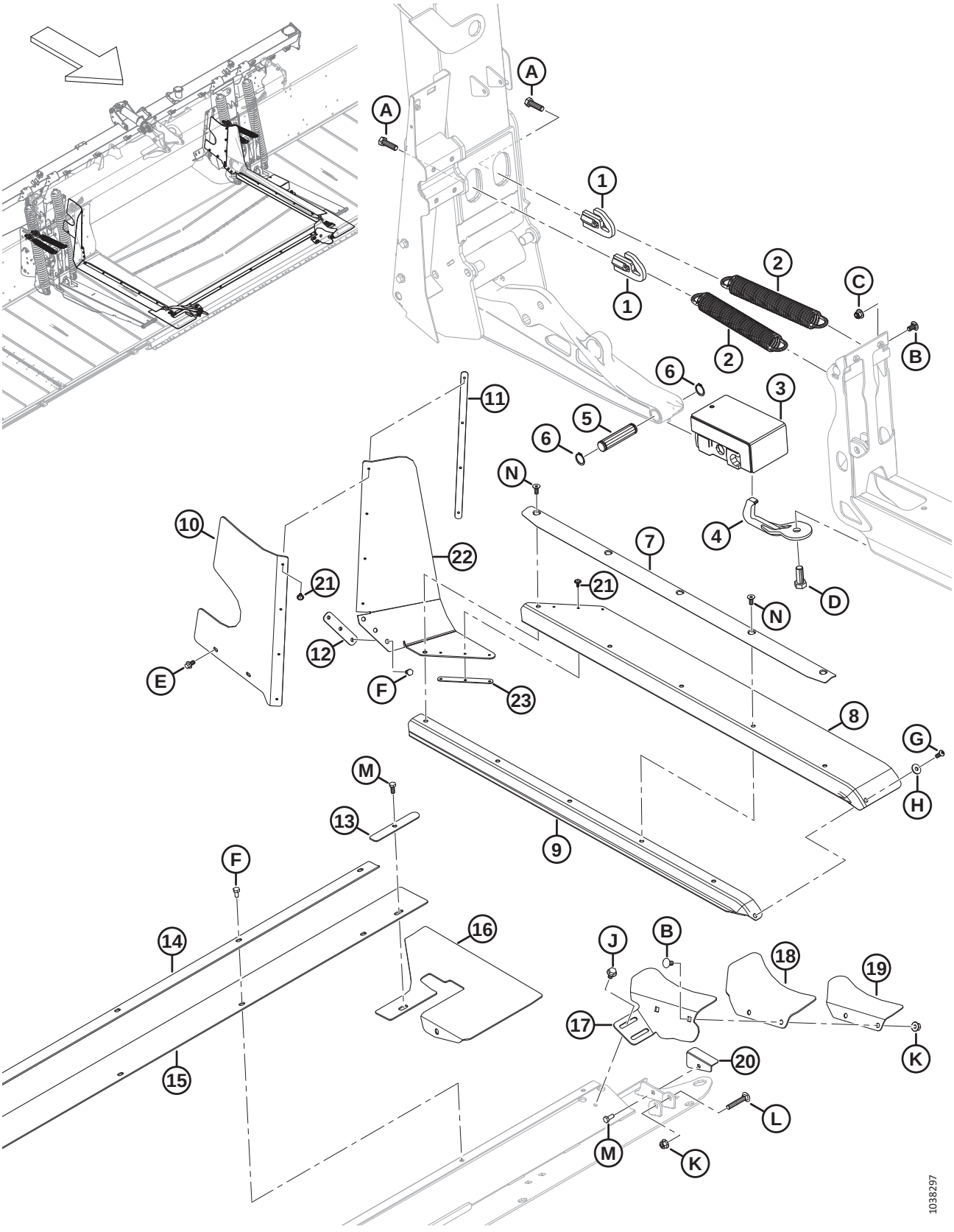

Ref	Part Number	Description	Qty	Serial Number
1	322676	TRIM SPRING TENSIONER – WELDT	4	421190–
2	340125	SPRING EXTENSION – HEADER TRIM	4	421190–
3	258703	RUBBER BLOCK FLEX – ASSY	2	421190–
4	258876	BREAKAWAY HOOK – WELDT	2	421190–
5	258318	PIN – PIVOT	2	421190–
6	18898	RING – EXT RETAINING	4	421190–
7	337407	RETAINER – SEAL AND FILLER	2	421190–
8	347500	FILLER – MID DECK SIDE	2	421190–
9	REF	SEAL – DRAPER FEED DECK [477]	OPT	421190–
10	328348	FILLER – LH REAR UPPER	1	421190–
	328349	FILLER – RH REAR UPPER	1	421190–
11	276770	PLATE – FILLER RETAINER	2	421190–
12	213713	RETAINER – FILLER MACHINED	2	421190–
13	301127	PLATE – FILLER RETAINER	2	421190–
14	301126	RETAINER – CENTER FILLER	1	421190–
15	295261	FILLER – PAN CENTER	1	421190–
16	295992	FLAP – PAN CORNER FLEX	2	421190–
17	337457	SUPPORT – LH CORNER FILLER	1	421190–
	337463	SUPPORT – RH CORNER FILLER	1	421190–
18	304040	FLAP – CORNER FILLER	2	421190–
19	337456	RETAINER – LH CORNER FILLER	1	421190–
	337464	RETAINER – RH CORNER FILLER	1	421190–
20	276117	RETAINER – PAN FLAP LH	1	421190–
	276062	RETAINER – PAN FLAP RH	1	421190–
21	293053	RIVET – POP	14	421190–
22	347775	FILLER – MID DECK SIDE UPPER	2	421190–
23	347778	PLATE – FILLER RETAINER	2	421190–
A	184669	BOLT – HEX HD M12 X 1.75 X 40-8.8-AA1J		
B	184657	BOLT – RHSSN M10 X 1.5 X 20-8.8-AA1J		
C	252807	NUT – HEX FLANGE NYLOC M10 X 1.5-8-AA1J		
D	111528	BOLT – HEX HD TFL M16 X 2 X 40-8.8-AA1J		
E	136485	BOLT – HEX FLG HD TFL M8 X 1.25 X 16-8.8-AA1J		
F	50139	BOLT – HEX HD TFL M8 X 1.25 X 16-8.8-AA1J		
G	320176	SCREW – HEX SOC BTN HD M8 X 1.25 X 20-10.9-AA1J		
H	184709	WASHER – FLAT LARGE M8-200HV		
J	136231	BOLT – HEX SER FLG HD M10 X 1.5 X 16 X SPCL-8.8		
K	135799	NUT – HEX FLG CTR LOC M10 X 1.5-10		
L	136113	BOLT – RHSN M10 X 1.5 X 60-8.8-AA1J		
M	30715	BOLT – HEX HD TFL M8 X 1.25 X 20-8.8-AA1J		
N	136592	SCREW – HEX SOC CSK HD TFL M8 X 1.25 X 20-8.8-ZINC		

477. For service parts, refer to Section *212 (Option) FM200 Full Interface Filler – FD2 Series, page 515*.

170 Feed Deck – Frame, Pivot Pins, and Front Support

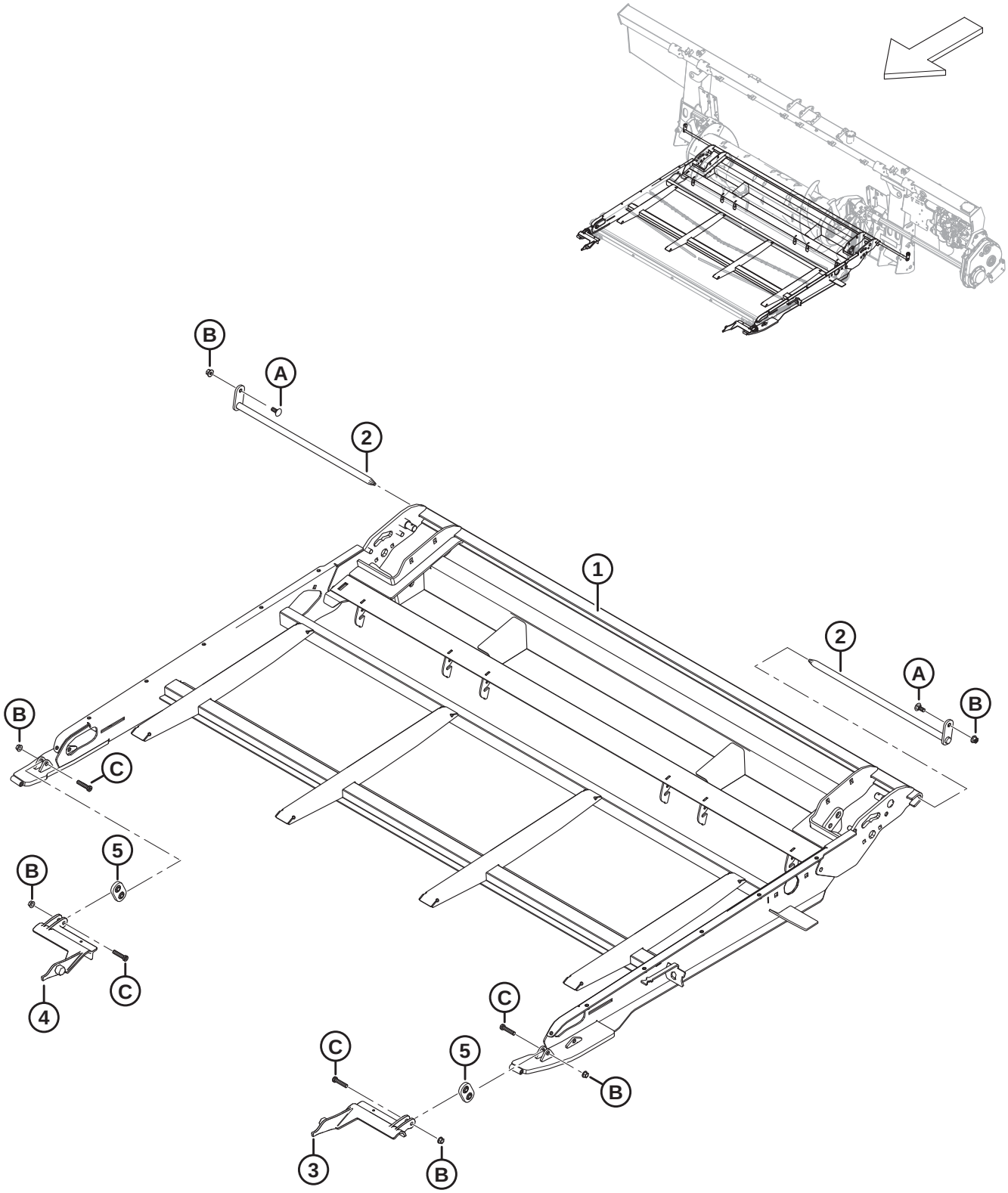

Ref	Part Number	Description	Qty	Serial Number
	357386	**ASSY – FEED DECK** [478]	**1**	
1	**347665**	**FRAME – CARRIER, FEED DECK WELDT**	**1**	
2	231368	PIN – DECK PIVOT WELDT	2	
3	213418	SUPPORT – LH ADAPTER LINK MACH	1	
4	213419	SUPPORT – RH ADAPTER LINK MACH	1	
5	308774	SUPPORT – HOOK ASSY	2	
A	135785	BOLT – RHSN M10 X 1.5 X 25-8.8-AA1J		
B	135799	NUT – HEX FLG CTR LOC M10 X 1.5-10		
C	320358	SCREW – HEX SOC HD M10 X 1.5 X 45-SPCL-8.8-ZINC		

478. Complete feed deck assembly. The assembly does not include pivot pins (MD #231368) and associated hardware, but includes all other parts listed in Section *170 Feed Deck – Frame, Pivot Pins, and Front Support, page 415* to Section *173 Feed Deck – Pans and Fillers, page 421*.

171 Feed Deck – Draper

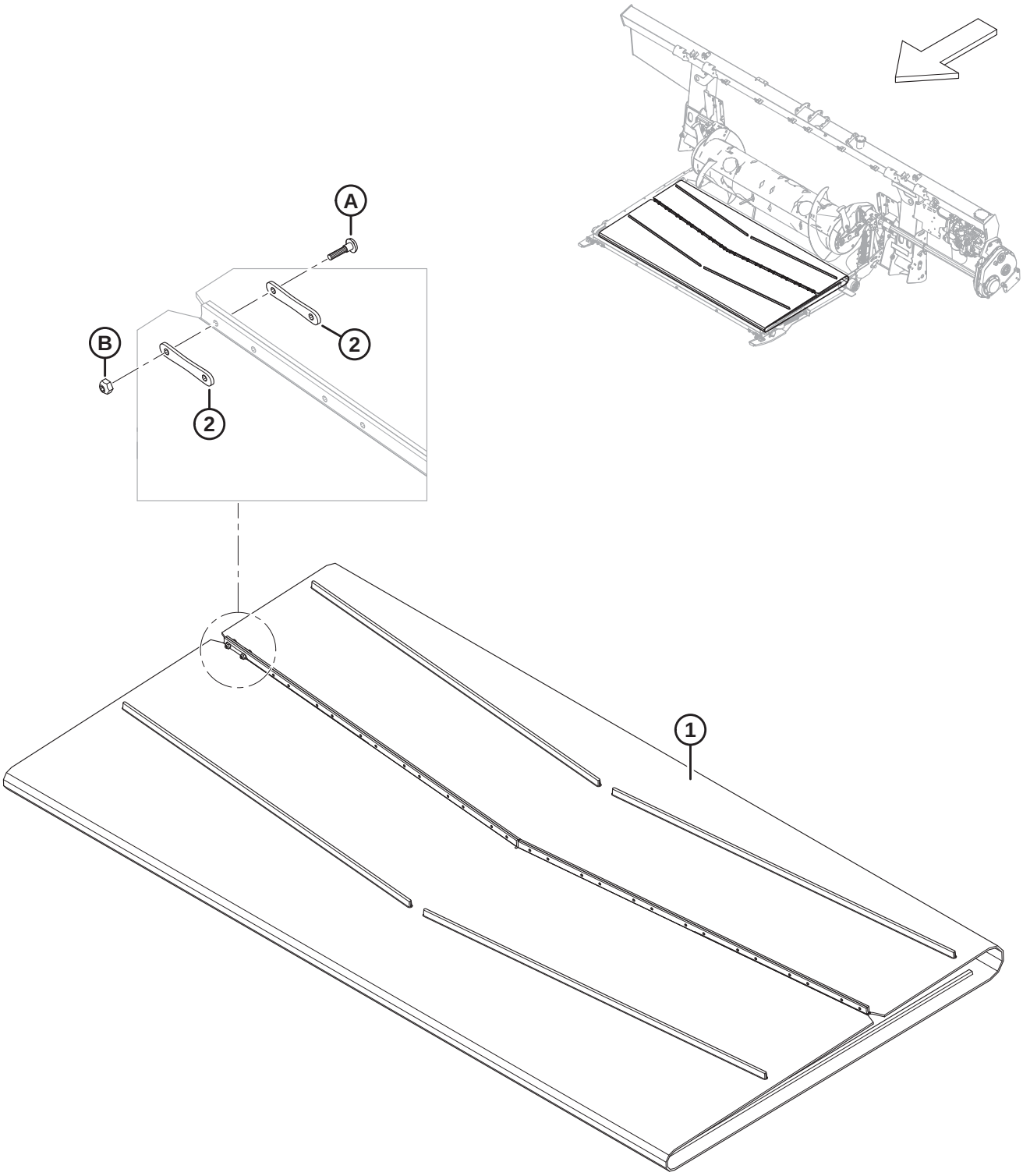

1032730

Ref	Part Number	Description	Qty	Serial Number
1	322555	DRAPER – 1988 MM (78.3 IN.) WIDE X 2205 MM LG	1	
2	130283	STRAP – DRAPER CONNECTOR	28	
A	135630	SCREW – BHRN #12-24 NCX 0.920 IN. LG (QTY 50)		
B	135626	NUT – #12-24 NC (QTY 50)		

172 Feed Deck – Drive/Idler Roller and Tensioner

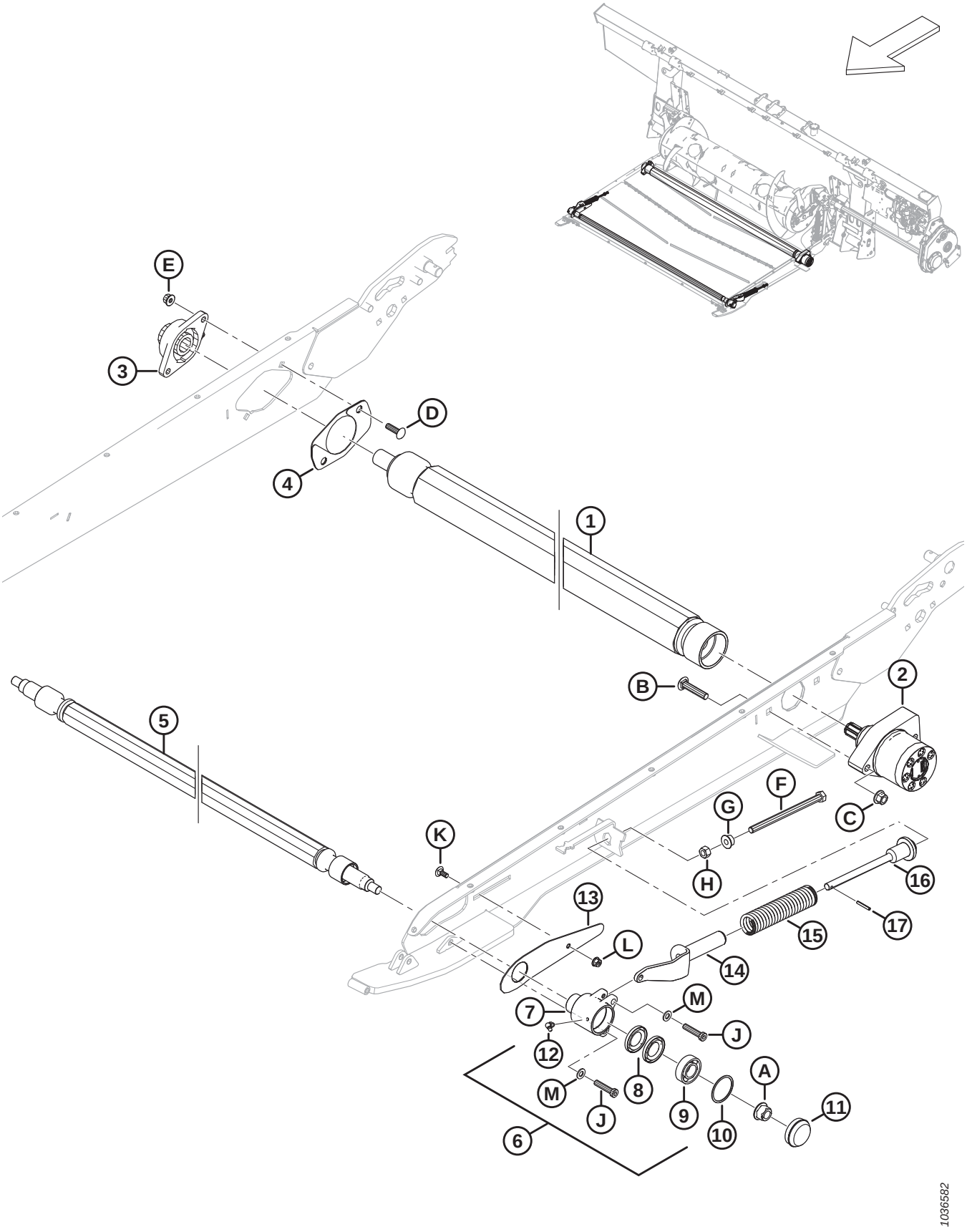

Ref	Part Number	Description	Qty	Serial Number
1	347483	ROLLER – DRIVE, VULCANIZED	1	
2	295853	MOTOR – HYD	1	
	245316	SEAL KIT		
3	347487	HOUSING – FL206 AND BEARING	1	
4	347553	KIT – DRIVE ROLLER COVER [479]	1	
5	295770	ROLLER – IDLER	1	
6	295399	HOUSING – IDLER CUP ASSY [480]	2	
7	314474	HOUSING – MACHINED IDLER CUP	2	
8	100862	SEAL – OIL	4	
9	118185	BEARING – BALL CYL, 52 MM O.D., 25 MM I.D.	2	
10	118011	RING – RETAINING INTERNAL	2	
11	133372	CAP – DUST	2	
12	21010	FITTING – LUBE 90° 1/4-28 TAPER THD	2	
13	295766	COVER – IDLER ROLLER	2	
14	328128	SUPPORT – DECK TENSION CASTING	2	
15	295407	SPRING – COMPRESSION	2	
16	328143	SUPPORT – SPRING MACHINED	2	
17	13617	PIN – SPRING 3/16 DIA X 1.25 LG	2	
A	152520	NUT – HEX FLG TECH LK M16 X 2-10-AA1J		
B	136308	BOLT – RHSSN M12 X 1.75 X 60-8.8-ZINC		
C	136431	NUT – HEX FLG CTR LOC M12 X 1.75-10		
D	136248	BOLT – RHSSN TFL M10 X 1.5 X 35-8.8-AA1J		
E	135799	NUT – HEX FLG CTR LOC M10 X 1.5-10		
F	252272	BOLT – HEX HD TFL M12 X 1.75 X 180-10.9-ZINC		
G	136036	NUT – HEX SM FLG M12 X 1.75-8-AA1J		
H	184694	NUT – HEX M12 X 1.75-8-AA1J		
J	320358	SCREW – HEX SOC HD M10 X 1.5 X 45-SPCL-8.8-ZINC		
K	197171	BOLT – RHSN M8 X 1.25 X 20-8.8-ZINC		
L	135337	NUT – HEX FLG CTR LK M8 X 1.25-8-AA1J		
M	184711	WASHER – FLAT REG M10-200HV-AA1J		

479. The kit includes two cover plates (not sold separately).

480. The housing assembly includes housing (MD #314474), two oil seals (MD #100862), bearing (MD #118185), and internal retaining ring (MD #118011). The assembly does not include lube fitting (MD #21010) or attaching bolts (MD #135319).

173 Feed Deck – Pans and Fillers

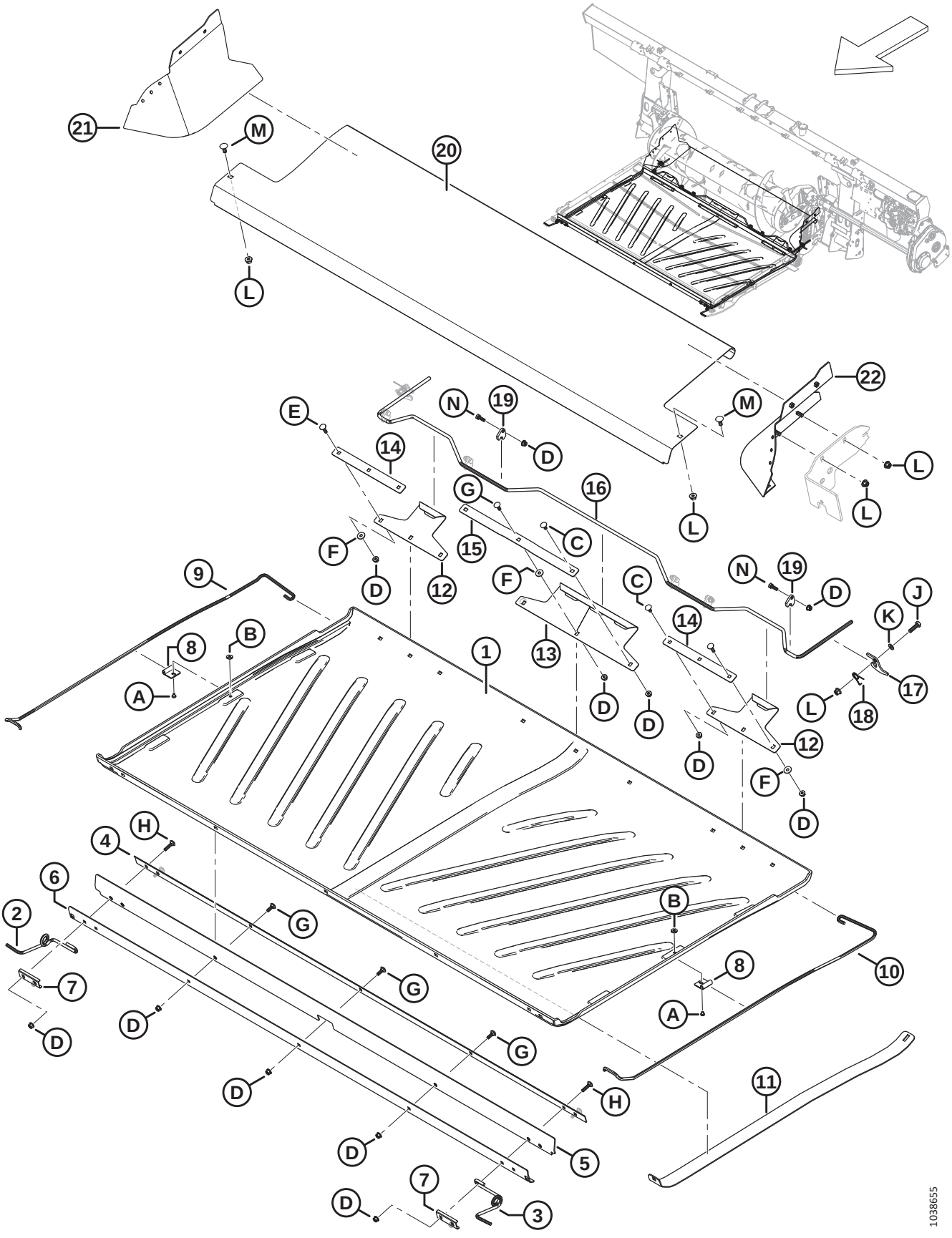

FEED DECK – PANS AND FILLERS

Ref	Part Number	Description	Qty	Serial Number
1	276681	PAN – FEED DECK	1	
2	347691	SUPPORT – PAN FRONT SPRING RH	1	
3	347692	SUPPORT – PAN FRONT SPRING LH	1	
4	295213	PLATE – FRONT BAR INNER	1	
5	295212	FLAP – PAN FRONT	1	
6	295211	PLATE – FRONT BAR OUTER	1	
7	287939	RETAINER – FRONT SPRING	2	
8	248833	RETAINER – PAN SPRING	2	
9	213634	SUPPORT – PAN SPRING RH	1	
10	213633	SUPPORT – PAN SPRING LH	1	
11	213635	SUPPORT – PAN LIFTER	1	
12	240013	HOOK – REAR SIDE	2	
13	240012	HOOK – REAR CENTER	1	
14	231765	BAR – SIDE HOOK	2	
15	231766	BAR – HOOK CENTER	1	
16	240010	HANDLE – PAN LATCH	1	
17	240254	SUPPORT – PAN HANDLE LATCH	2	
18	159020	SPRING – TORSION	2	
19	248914	GUIDE – HANDLE LOCK	6	
20	240264	PAN – FEED DECK STAINLESS	1	
21	335912	FILLER – RH REAR CORNER WELDT	1	
22	335891	FILLER – LH REAR CORNER WELDT	1	
A	252291	SCREW – PAN HD M6 X 1 X 8-8.8-AA1J		
B	252051	NUT – TEE M6		
C	197171	BOLT – RHSN M8 X 1.25 X 20-8.8-ZINC		
D	135337	NUT – HEX FLG CTR LK M8 X 1.25-8-AA1J		
E	190752	BOLT – RHSN M8 X 1.25 X 30-8.8-AA1J		
F	184709	WASHER – FLAT LARGE M8-200HV		
G	184648	BOLT – RHSN M8 X 1.25 X 25-8.8-AA1J		
H	136050	BOLT – RHSN M8 X 1.25 X 35-8.8-AA1J		
J	30628	BOLT – HEX HD M10 X 1.5 X 35-8.8-AA1J		
K	184711	WASHER – FLAT REG M10-200HV-AA1J		
L	135799	NUT – HEX FLG CTR LOC M10 X 1.5-10		
M	135785	BOLT – RHSN M10 X 1.5 X 25-8.8-AA1J		
N	184652	BOLT – HEX HD TFL M8 X 1.25 X 25-8.8-AA1J		

174 Hydraulics – Center-Link and Header Tilt / Reel Fore-Aft

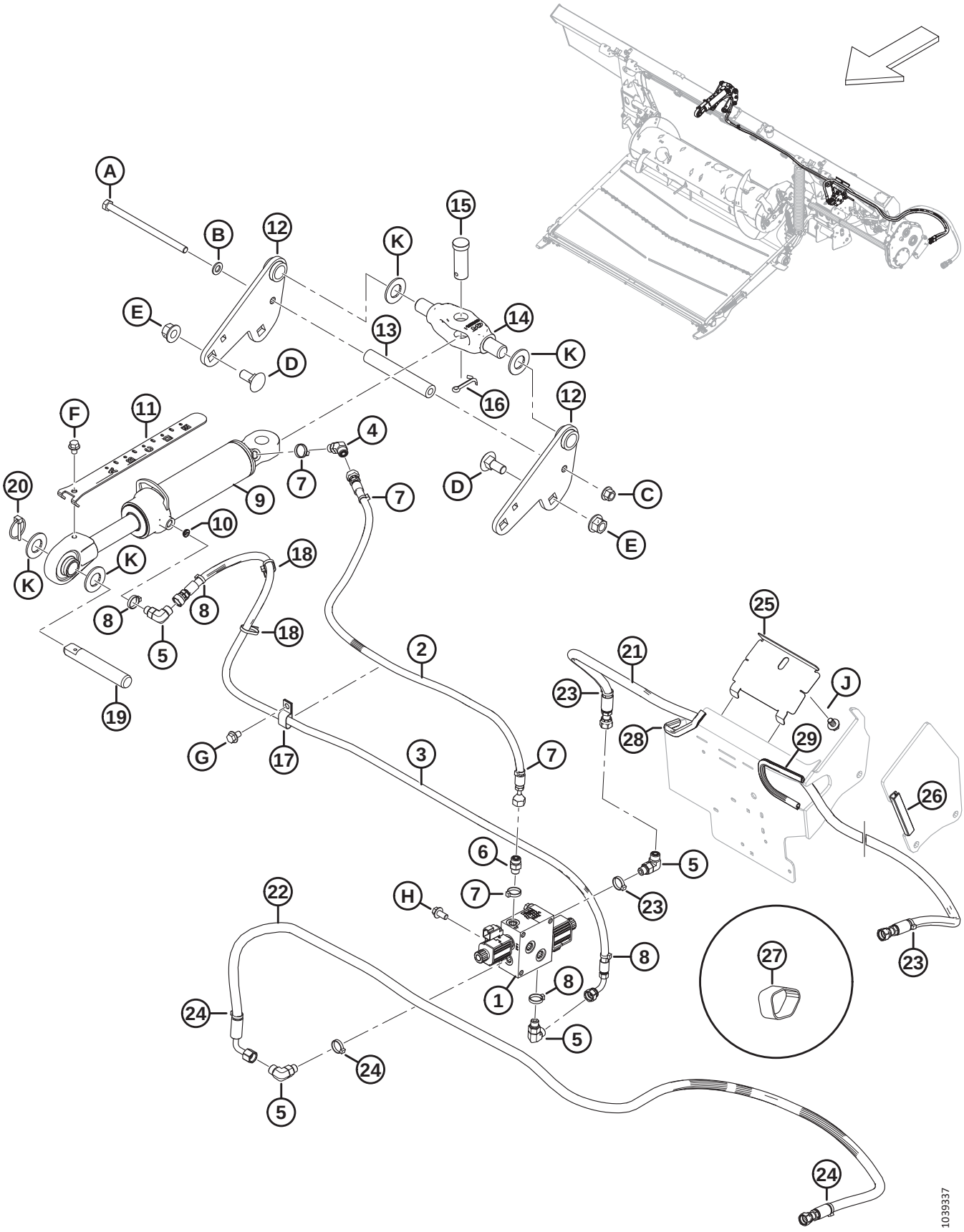

Ref	Part Number	Description	Qty	Serial Number
1	322022	MANIFOLD – SELECTOR VALVE (SV) [481]	1	
	213363	MANIFOLD – SELECTOR VALVE (SV) [482]		
	287449	COIL – 12VDC - .625IN		
	287450	VALVE – POPPET		
	287451	SEAL KIT		
2	314417	HOSE – HYD, TILT FORE	1	
3	314416	HOSE – HYD, TILT AFT	1	
4	136144	FITTING – ELBOW 45° HYD	1	
	135865	O-RING – Ø1.78 X Ø9.25		
	50219	O-RING – Ø1.98 X Ø11.89		
5	136095	FITTING – ELBOW 90° HYD	3	
	135865	O-RING – Ø1.78 X Ø9.25		
	50219	O-RING – Ø1.98 X Ø11.89		
6	135778	FITTING – ADAPTER	1	
	135865	O-RING – Ø1.78 X Ø9.25		
	50219	O-RING – Ø1.98 X Ø11.89		
7	40703	FASTENER – CABLE TIE, BLUE	4	
8	40704	FASTENER – CABLE TIE, ORANGE	4	
9	308658	CYLINDER – TOP LINK, 193 STROKE	1	
	123978	SEAL KIT		
10	252692	RESTRICTOR – #6 ORB X.035 IN.	1	
11	314292	INDICATOR – TILT, 193 STROKE	1	
12	314645	WELDMENT – TOP LINK ANCHOR	2	
13	301318	TUBE – SPACER	1	
14	187660	PIVOT – MACHINING	1	
15	135995	PIN – CLEVIS	1	
16	18609	PIN – COTTER 1/4 DIA X 2 ZP	1	
17	135234	CLAMP – DOUBLE HOSE INSULATED	1	
18	21763	FASTENER – CABLE TIE, BLACK	2	
19	313734	PIN – CENTER LINK	1	
20	102264	PIN – LYNCH 3/16 X 1 9/16 IN	1	
21	314397	HOSE – HYD, REEL FORE	1	
22	314399	HOSE – HYD, REEL AFT	1	
23	49227	FASTENER – CABLE TIE, GREEN	3	
24	40702	FASTENER – CABLE TIE, RED	3	
25	347949	PANEL – HOSE HOLDER	1	
26	254183	SEAL – EDGE TRIM	1	
27	295927	CINCH STRAP – 8 IN. LG [483]	1	

481. The manifold includes selector valve manifold (MD #213363), one adapter fitting (MD #135778), three 90° elbow fittings (MD #136095), blue fastener (MD #40703), orange fastener (MD #40704), red fastener (MD #40702), and green fastener (MD #49227).
482. The manifold includes two poppet valves (MD #287450) and two coils (MD #287449).
483. The cinch strap is used to protect reel fore-aft hoses (MD #314397, MD #314399).

HYDRAULICS – CENTER-LINK AND HEADER TILT / REEL FORE-AFT

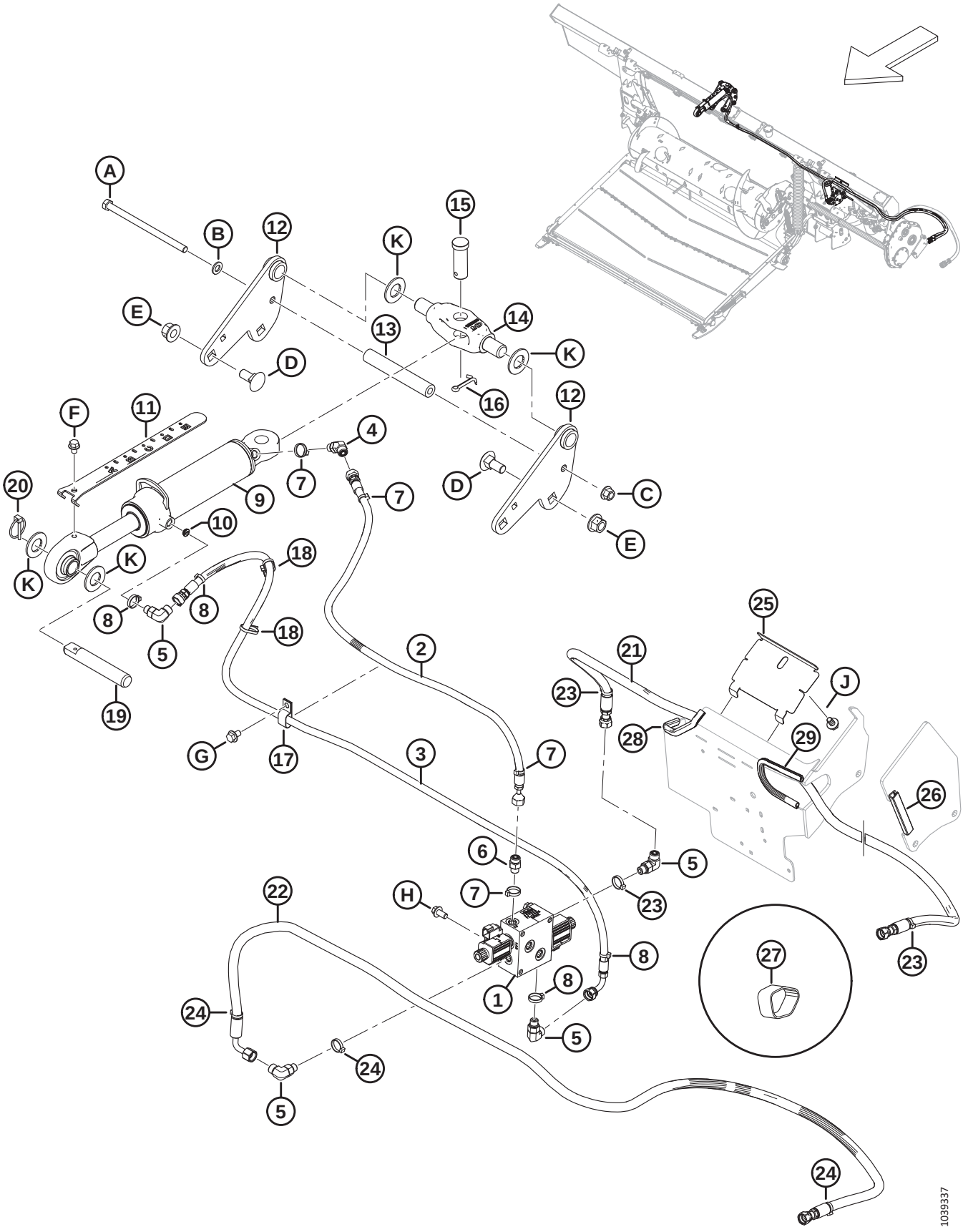

Ref	Part Number	Description	Qty	Serial Number
28	133136	MOULDING	1	
29	45427	MOULDING – RH	1	
A	152395	BOLT – HEX HD M12 X 1.75 X 200-10.9-AA3L		
B	184714	WASHER – FLAT REG M12-300HV		
C	136431	NUT – HEX FLG CTR LOC M12 X 1.75-10		
D	136755	BOLT – RHSN M16 X 2 X 40-8.8-AA1J		
E	136440	NUT – HEX FLG CTR LK M16 X 2-10-AA1J		
F	30693	BOLT – HEX FLG HD SER 3/8-16 X .5 GR 5 - AA1J		
G	136151	BOLT – HEX FLG HD TFL M10 X 1.5 X 16-8.8-AA1J		
H	152655	BOLT – HEX FLG HD M10 X 1.5 X 20-8.8-AA1J		
J	136151	BOLT – HEX FLG HD TFL M10 X 1.5 X 16-8.8-AA1J		
K	18603	WASHER – FLAT SAE 1 1/16 ID X 2.0 IN OD AA1J		

175 Hydraulics – Feed Deck

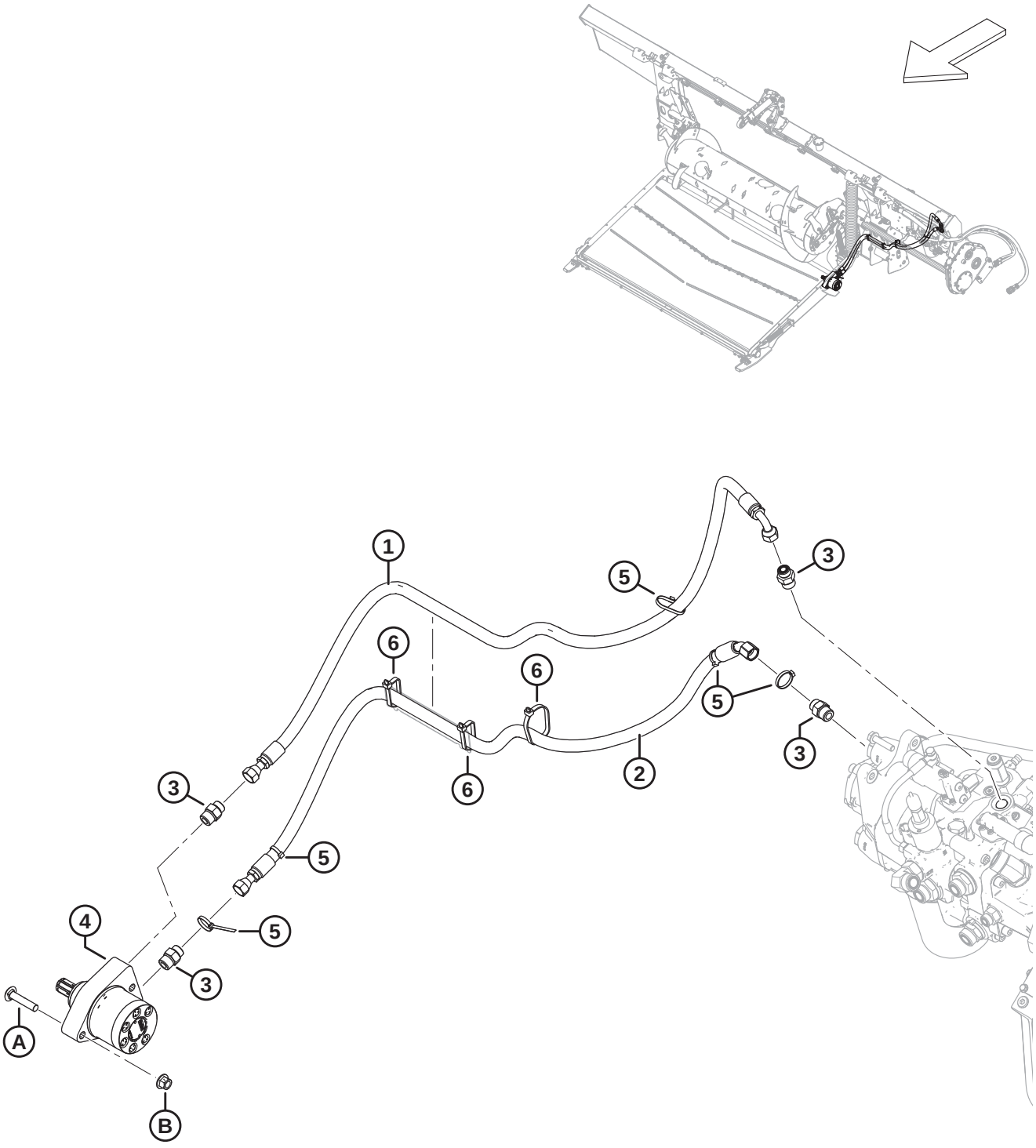

Ref	Part Number	Description	Qty	Serial Number
1	314396	HOSE – HYD, FEED DRAPER RETURN	1	
2	314395	HOSE – HYD, FEED DRAPER PRESSURE	1	
3	184463	FITTING – ADAPTER HYD	4	
4	295853	MOTOR – HYD (FEED DECK)	1	
	245316	SEAL KIT		
5	21763	FASTENER – CABLE TIE, BLACK 160 MM LG	5	
6	30753	FASTENER – CABLE TIE, BLACK 305 MM LG	3	
A	136308	BOLT – RHSSN M12 X 1.75 X 60-8.8-ZINC		
B	136431	NUT – HEX FLG CTR LOC M12 X 1.75-10		

176 Hydraulics – Suction and Return

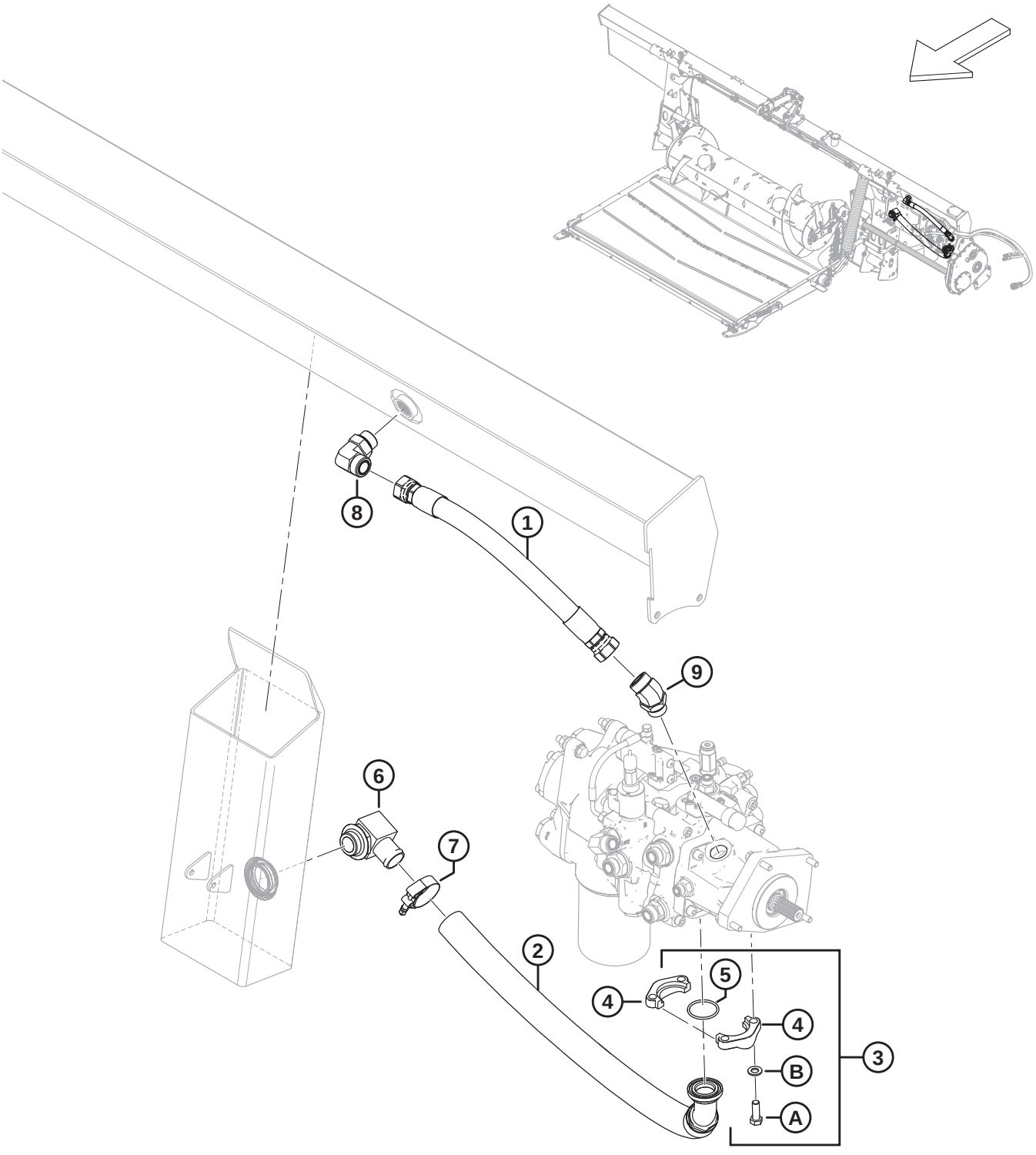

Ref	Part Number	Description	Qty	Serial Number
1	314402	HOSE – HYD, RETURN	1	
2	314389	HOSE – HYD, SUCTION	1	
3	314537	KIT – SPLIT FLANGE, 1.5 IN. CD61-1 [484]	1	
4	136106	FLANGE – HALF SPLIT 1.5 IN.	2	
5	135400	O-RING – 3.53 X 47.22	1	
6	111545	FITTING – ELBOW HYD HOSE ADAPTER	1	
7	245753	CLAMP – T BOLT	1	
8	135734	FITTING – ELBOW 90° HYD	1	
	50220	O-RING – Ø2.95 X Ø29.74		
	135554	O-RING – 1.78 X 23.52		
9	252814	FITTING – ELBOW 45° HYD	1	
	135554	O-RING – 1.78 X 23.52		
	50220	O-RING – Ø2.95 X Ø29.74		
A	152730	BOLT – HEX HD TFL M12 X 1.75 X 35-10.9-AA1J		
B	184714	WASHER – FLAT REG M12-300HV		

484. The kit includes two 1.5 inch half split flange (MD #136106), O-ring (MD #135400), four bolts (MD #152730), and four washers (MD #184714).

177 Hydraulics – Double Reel, Float Module to Header Manifold

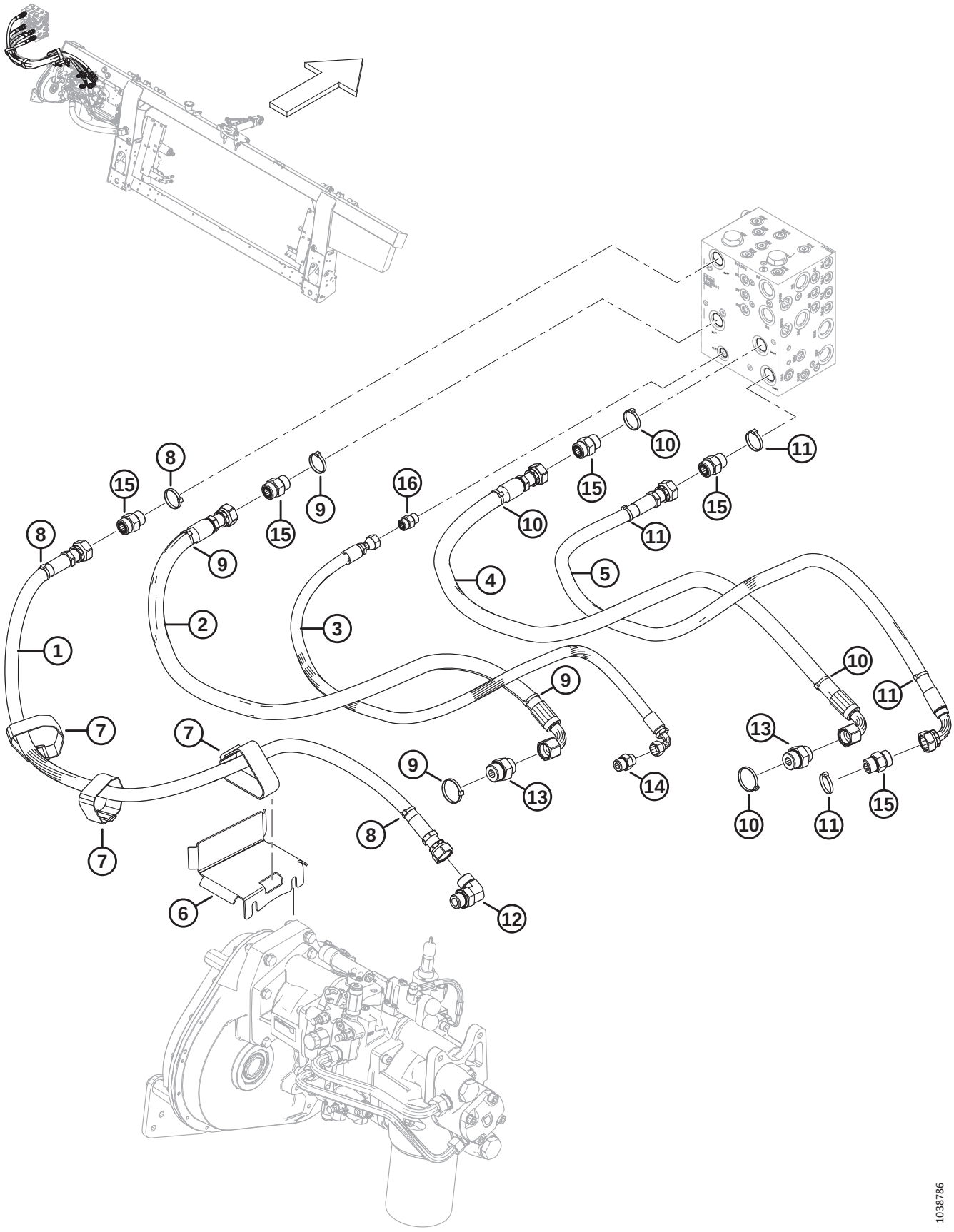

Ref	Part Number	Description	Qty	Serial Number
1	322256	HOSE – HYD, SDP	1	
2	314391	HOSE – HYD, KP	1	
3	314401	HOSE – HYD, CD	1	
4	314392	HOSE – HYD, KR	1	
5	314394	HOSE – HYD, SDR	1	
6	335887	HOLDER – HOSE	1	
7	347969	CINCH STRAP – 16 IN. LG	3	
8	49227	FASTENER – CABLE TIE, GREEN	3	
9	40704	FASTENER – CABLE TIE, ORANGE	4	
10	40703	FASTENER – CABLE TIE, BLUE	4	
11	40702	FASTENER – CABLE TIE, RED	4	
12	135821	FITTING – ELBOW 90° HYD	1	
	30971	O-RING – Ø2.95 X Ø23.47		
	135868	O-RING – Ø1.78 X Ø18.77		
13	135789	FITTING – ADAPTER	2	
	50220	O-RING – Ø2.95 X Ø29.74		
	135868	O-RING – Ø1.78 X Ø18.77		
14	184463	FITTING – ADAPTER HYD	1	
	44210	O-RING – Ø2.46 X Ø19.18		
	135866	O-RING – Ø1.78 X Ø12.42		
15	135788	FITTING – ADAPTER	5	
	30971	O-RING – Ø2.95 X Ø23.47		
	135868	O-RING – Ø1.78 X Ø18.77		
16	135780	FITTING – ADAPTER	1	
	44209	O-RING – Ø2.21 X Ø16.36		
	135866	O-RING – Ø1.78 X Ø12.42		

178 Hydraulics – Triple Reel, Float Module to Header Manifold

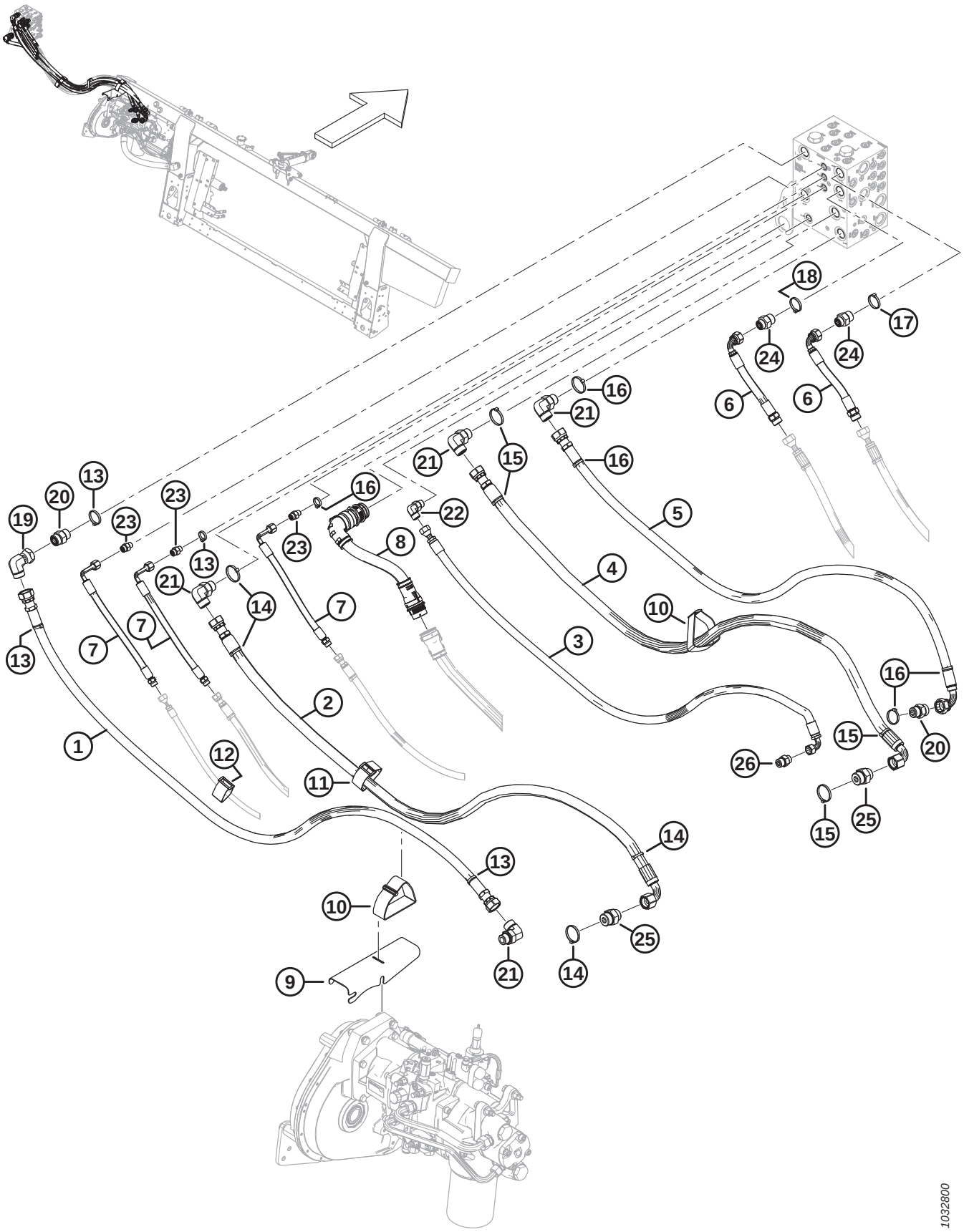

HYDRAULICS – TRIPLE REEL, FLOAT MODULE TO HEADER MANIFOLD

Ref	Part Number	Description	Qty	Serial Number
1	314593	HOSE – HYD, SDP WIDE	1	
2	314591	HOSE – HYD, KP WIDE	1	
3	314595	HOSE – HYD, CD WIDE	1	
4	314592	HOSE – HYD, KR WIDE	1	
5	314594	HOSE – HYD, SDR WIDE	1	
6	314606	HOSE – HYD, REEL DRIVE EXT	2	
7	314605	HOSE – HYD, REEL F/A/L EXT	3	
8	335133	HARNESS – WIDE FRAME EXT	1	
9	314697	SUPPORT – HOSE	1	
10	347969	CINCH STRAP – 16 IN. LG	2	
11	295927	CINCH STRAP – 8 IN. LG	1	
12	135444	CINCH STRAP – 6 IN. LG	1	
13	49227	FASTENER – CABLE TIE, GREEN	4	
14	40704	FASTENER – CABLE TIE, ORANGE	2	
15	40703	FASTENER – CABLE TIE, BLUE	2	
16	40702	FASTENER – CABLE TIE, RED	5	
17	49232	FASTENER – CABLE TIE, WHITE	1	
18	40701	FASTENER – CABLE TIE, YELLOW	1	
19	135888	FITTING – ELBOW 90° HYD	1	
	135868	O-RING – Ø1.78 X Ø18.77		
20	135788	FITTING – ADAPTER	2	
	30971	O-RING – Ø2.95 X Ø23.47		
	135868	O-RING – Ø1.78 X Ø18.77		
21	135821	FITTING – ELBOW 90° HYD	4	
	30971	O-RING – Ø2.95 X Ø23.47		
	135868	O-RING – Ø1.78 X Ø18.77		
22	136220	FITTING – ELBOW 90° HYD	1	
	44209	O-RING – Ø2.21 X Ø16.36		
	135866	O-RING – Ø1.78 X Ø12.42		
23	135778	FITTING – ADAPTER	3	
	50219	O-RING – Ø1.98 X Ø11.89		
	135865	O-RING – Ø1.78 X Ø9.25		
24	135786	FITTING – ADAPTER	2	
	30971	O-RING – Ø2.95 X Ø23.47		
	135867	O-RING – Ø1.78 X Ø15.60		
25	135789	FITTING – ADAPTER	2	
	50220	O-RING – Ø2.95 X Ø29.74		
	135868	O-RING – Ø1.78 X Ø18.77		
26	184463	FITTING – ADAPTER HYD	1	
	44210	O-RING – Ø2.46 X Ø19.18		
	135866	O-RING – Ø1.78 X Ø12.42		

179 Electrical – Base

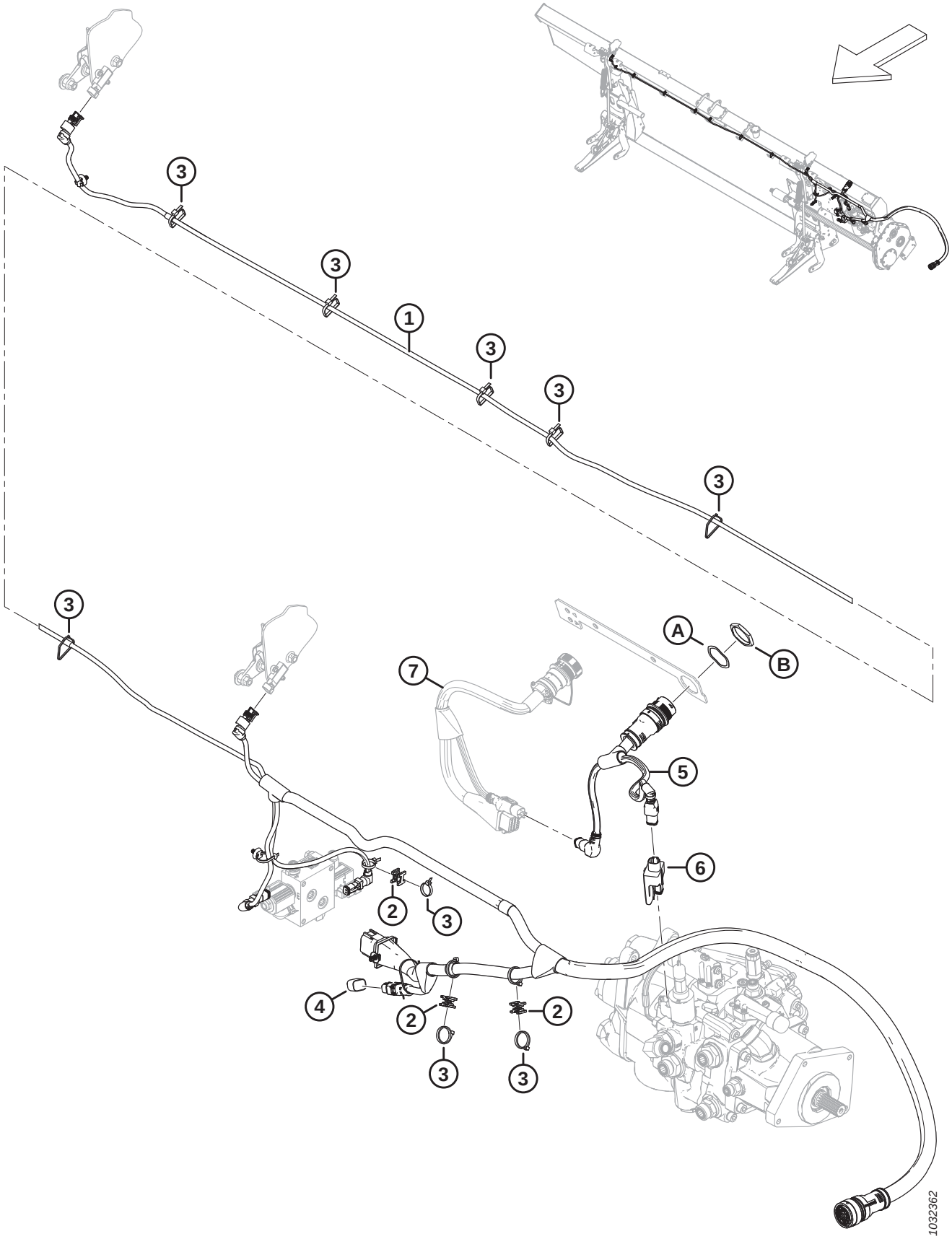

Ref	Part Number	Description	Qty	Serial Number
	B7196	KIT – LATERAL TILT PLUG [485]		
1	328089	HARNESS – MAIN [486]	1	
	136655	FASTENER – FIR TREE MT W/ TIE		
2	134442	SPACER – DUAL SWIVEL SADDLE	3	
3	21763	FASTENER – CABLE TIE, BLACK	A/R	
4	328560	PLUG – FLOAT CONFIG. 1 SENSOR	1	
	328318	PLUG – FLOAT CONFIG. 2 SENSOR	OPT	
5	322383	HARNESS – FM200 ADAPTER	1	
6	328411	MODULE – VALVE DRIVER	1	
7	REF	HARNESS – COMPLETION PACKAGE [487]		
A	134730	WASHER – LOCK, HDP 20, SIZE 24		
B	134728	NUT – PANEL, HDP 20, SIZE 24		

485. The kit includes two-sensor plug (MD #328318) and instructions. Kits are available through Whole Goods only.
486. The harness comes complete with all fir tree fasteners (MD #136655) attached.
487. The harness varies depending on the combine model and the electrical completion package required. For harness part numbers, refer to the electrical completion section for your specific combine.

180 Electrical – FM200 to Combine Cab

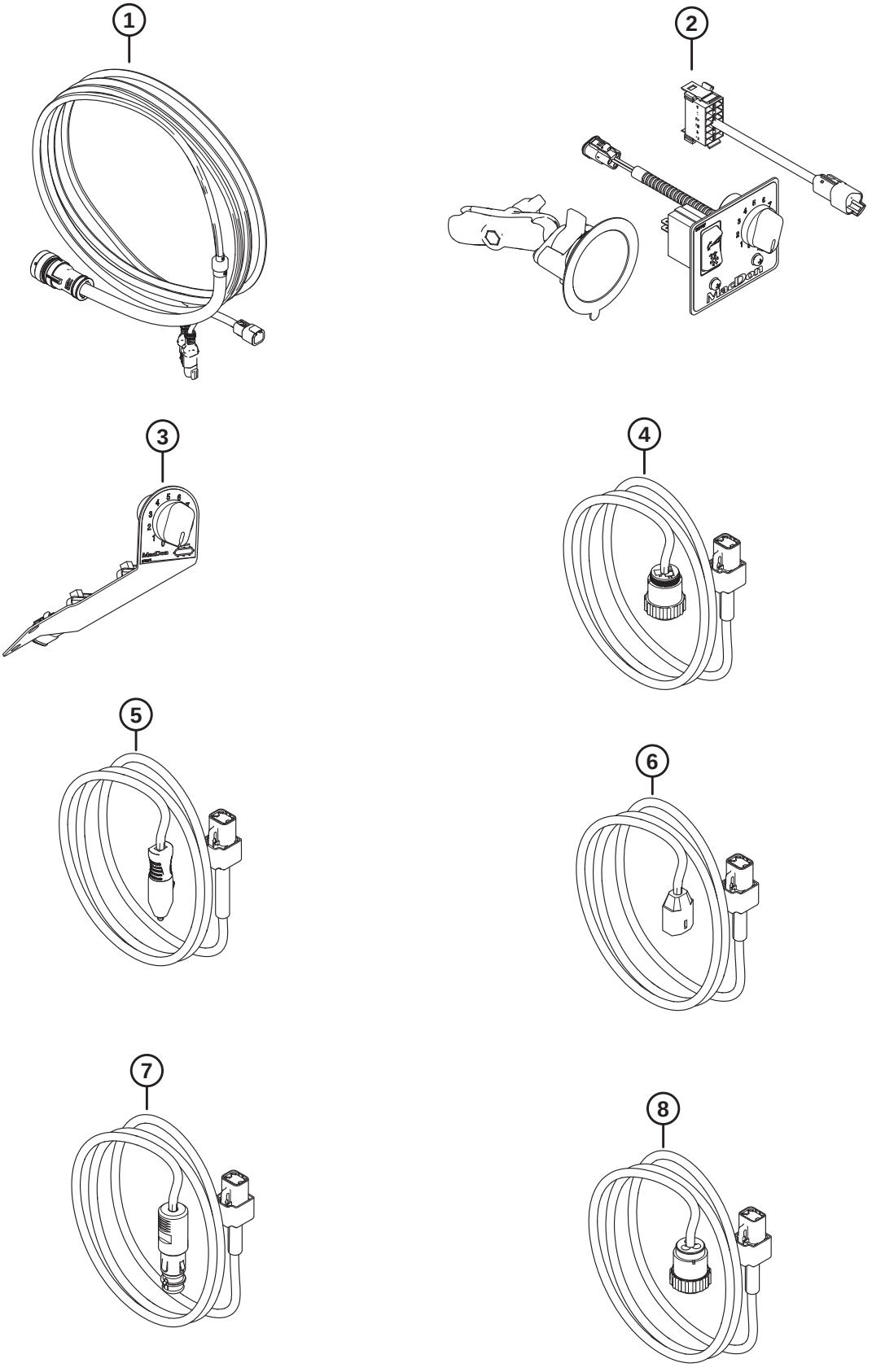

Ref	Part Number	Description	Qty	Serial Number
1	328549	KIT – CAB CONTROL [488]		
	322388	HARNESS – COMBINE CAB CONTROL		
2	328550	KIT – TILT AND SIDE DRAPER CONTROL [489]		
	314076	HARNESS – EXT. CAB ROCKER SW		
	287859	BASE – SUCTION CUP WITH ARM		
	NSS	CONTROL PANEL – ICSDSC, GENERIC [490]		
3	328551	KIT – SIDE DRAPER CONTROL, CNH [491]		
	276671	CONTROL PANEL, ICSDSC,CNH		
	213459	POTENTIOMETER – 5K		
	109773	KNOB – PLASTIC		
	21763	FASTENER – CABLE TIE, BLACK		
4	328552	KIT – CAB POWER CPC NA (CNH) [492]		
	308684	HARNESS – EXT. CAB PWR CPC		
5	328553	KIT – CAB POWER AUX (AGCO)		
	308941	HARNESS – EXT. CAB PWR AUX		
6	328554	KIT – CAB PWR JD [493]		
	308942	HARNESS – EXT. CAB PWR JD		
7	328555	KIT – CAB POWER BOSCH (CLAAS) [494]		
	308943	HARNESS – EXT. CAB PWR BOSCH		
8	335287	KIT – CAB PWR CPC EU [495]		
	328561	HARNESS – EXT. CAB PWR CPC EU		
	337611	BAG ASSY – CBN CONTROL CLAAS [496]		
	337617	BAG ASSY – CBN CONTROL CNH NA [497]		
	337618	BAG ASSY – CBN CONTROL CNH EU [498]		

488. The kit includes combine cab control harness (MD #322388) and instructions.
489. The kit includes exterior cab rocker switch (MD #314076), base suction cup with arm (MD #287859), control panel (NSS), and instructions.
490. The control panel (NSS) includes Generic panel (MD #287944), rocker switch (MD #287797), ball mount base (MD #287749), two screws (MD #135161), and two nuts (MD #20012).
491. The kit includes control panel (MD #276671) and instructions.
492. The kit includes exterior cab power harness (MD #308684) and instructions.
493. The kit includes John Deere exterior cab power harness (MD #308942) and instructions.
494. The kit includes Bosch exterior cab power harness (MD #308943) and instructions.
495. The kit includes exterior cab power harness (MD #328561) and instructions.
496. The bag assembly includes Cab Control kit (MD #328549), Tilt and Side Draper Control kit (MD #328550), Bosch Cab Power kit (MD #328555), conduit (MD #293108), locking clip (MD #500454), cable ties (MD #21763, MD #30753), plug (MD #287784), and cable tie mounts (MD #305330).
497. The bag assembly includes Cab Control kit (MD #328549), CNH Tilt and Side Draper Control kit (MD #328551), Cab Power kit (MD #328552), and cable tie mounts (MD #305330).
498. The bag assembly includes Cab Control kit (MD #328549), CNH Tilt and Side Draper Control kit (MD #328551), Cab Power kit (MD #335287), cable ties (MD #21763, MD #30753), and cable tie mounts (MD #305330).

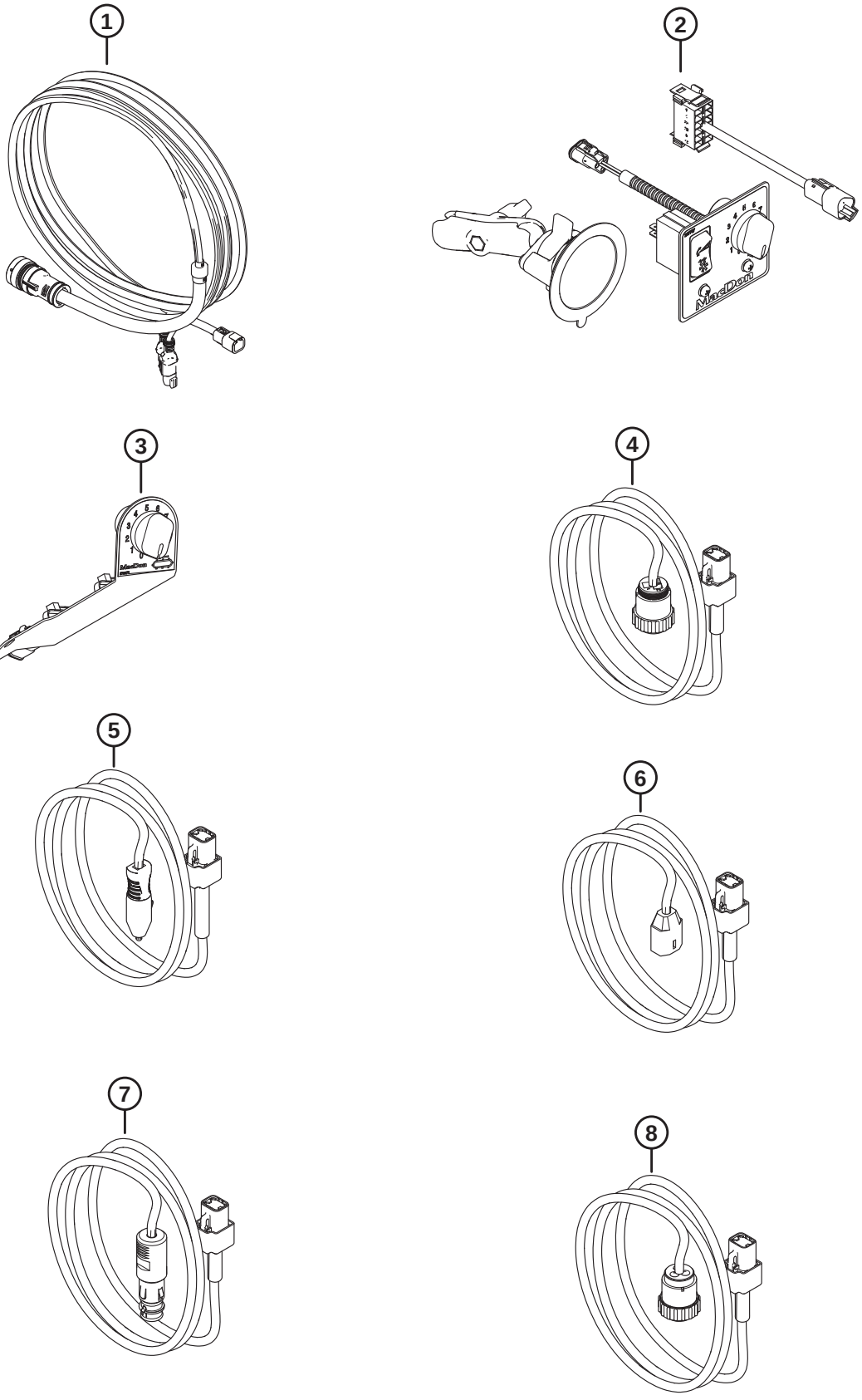
1
2
3
4
5
6
7
8
1034882

Ref	Part Number	Description	Qty	Serial Number
	337619	BAG ASSY – CBN CONTROL JD [499]		
	337627	BAG ASSY – CBN CONTROL AGCO [500]		

499. The bag assembly includes Cab Control kit (MD #328549), Tilt and Side Draper Control kit (MD #328550), John Deere Cab Power kit (MD #328554), conduit (MD #293108), cable ties (MD #21763, MD #30753), and cable tie mounts (MD #305330).

500. The bag assembly includes Cab Control kit (MD #328549), Tilt and Side Draper Control kit (MD #328550), Bosch Cab Power kit (MD #328555), cable ties (MD #21763, MD #30753), and cable tie mounts (MD #305330).

181 Decals and Reflectors – FM200

1

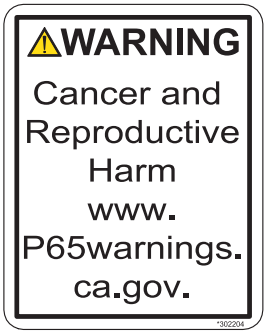

2

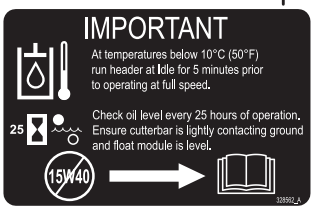

3

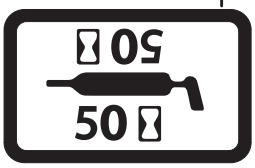

4

This product may be covered by one or more of the following patents:

CDN. # 1075914	U.S. # 35543
CDN. # 1226739	U.S. # 4346909
CDN. # 1240158	U.S. # 4573309
CDN. # 1244248	U.S. # 4660361
CDN. # 1267292	U.S. # 4662161
CDN. # 1322104	U.S. # 4909026
AUSTRALIA # 615149	U.S. # 5086613
AUSTRALIA # 617821	U.S. # 5157905
KAZAKHSTAN # 4372	U.S. # 5243810
RUSSIA # 1828389	U.S. # 5261290
UKRAINE # 3440	U.S. # 5435239
ITALY # 0717922	U.S. # 5459986
FRANCE # 0717922	U.S. # 5473872
GERMANY # 0717922	U.S. # 5678398
U.K. # 0717922	U.S. # 5791128
	U.S. # 5927606
	U.S. # 5970695
	U.S. # 5992759
	U.S. # 6029429

Other patents pending.

5

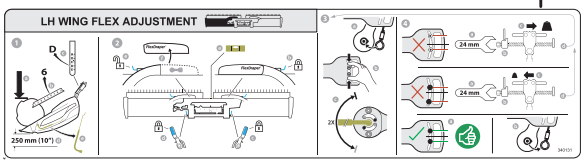

6

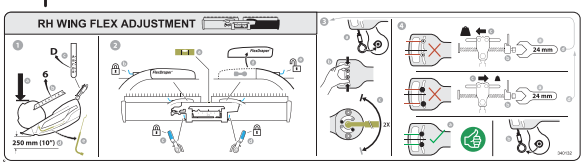

7

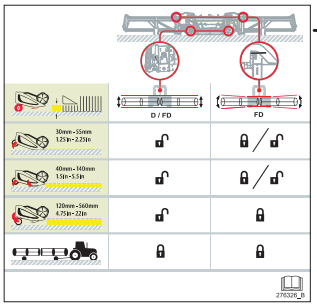

8

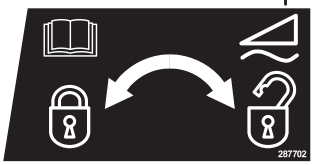

9

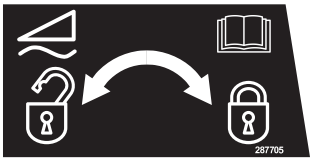

10



11



12

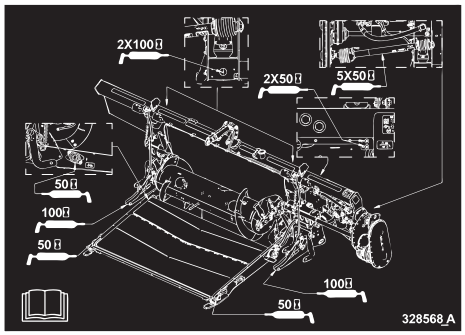

13

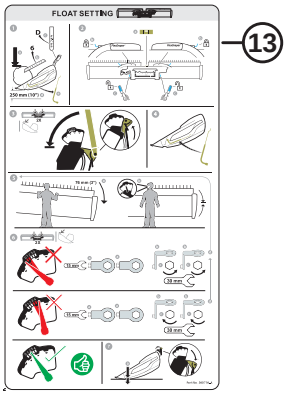

14

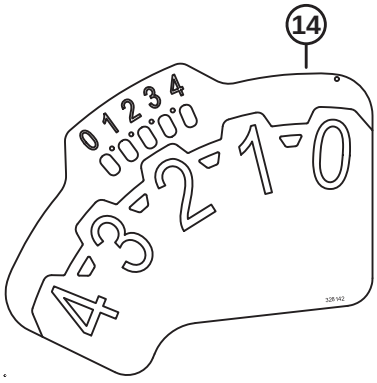

15



16



17



1039342

DECALS AND REFLECTORS – FM200

Ref	Part Number	Description	Qty	Serial Number
1	302204	DECAL – CA PROPOSITION 65		
2	328562	DECAL – OIL, IMPORTANT		
3	23165	DECAL – 50 HR LUBE		
	23163	DECAL – 10 HR LUBE		
4	32070	DECAL – PATENT NUMBER		
5	340131	DECAL – LH FLEX SETTING		
6	340132	DECAL – RH FLEX SETTING		
7	276326	DECAL – HEADER ADJUSTMENT		
8	287702	DECAL – FLOAT LOCK, LH		
9	287705	DECAL – FLOAT LOCK, RH		
10	328565	DECAL – OIL DRAIN		
11	313728	DECAL – READ MANUAL/FLUID SPRAY		
12	347342	DECAL – GREASE FM200		
13	**360716**	**DECAL – FLOAT SETTING**		
14	328142	DECAL – FSM		
15	**360655**	**DECAL – SAFETY RETURN WRENCH**		
16	174131	STRIP – ANTI SLIP, 250 MM LG		
	132117	STRIP – ANTI SLIP, 450 MM LG		
	140225	STRIP – ANTI SLIP, 550 MM LG		
17	115146	REFLECTOR – AMBER		

182 Challenger®, Massey Ferguson®, and Gleaner® – Float Module Completion

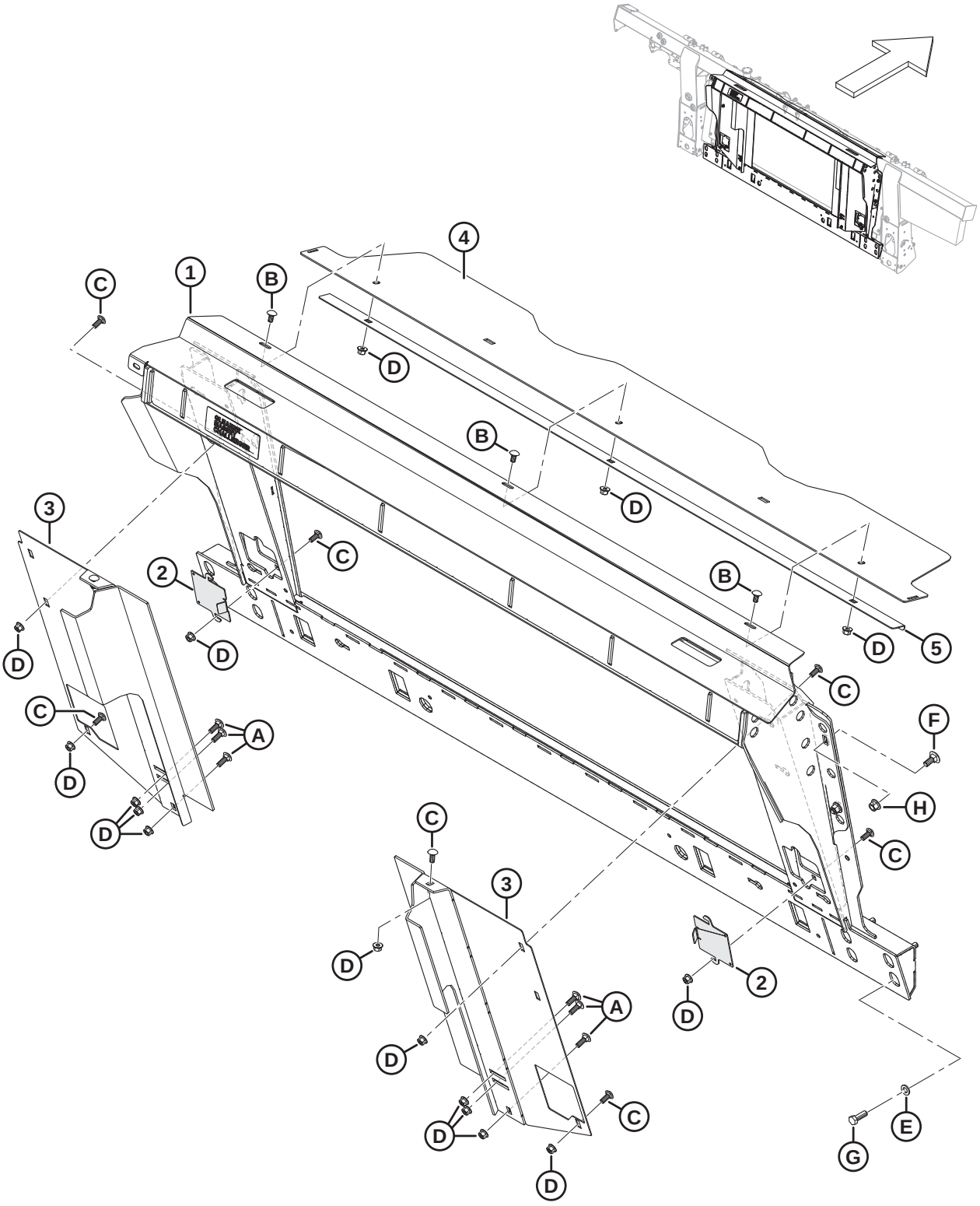

Ref	Part Number	Description	Qty	Serial Number
	B7313	KIT – GMC TRANSITION FRAME [501]		
1	347480	FRAME – GMC W/ DECAL	1	
2	347431	DOOR – ACCESS	2	
3	337862	FILLER – LH WELDT	1	
	337863	FILLER – RH WELDT	1	
4	**357195**	**COVER – FEED AUGER TOP**	**1**	
5	301629	RETAINER – DUST COVER	1	
A	184662	BOLT – RHSN TFL M10 X 1.5 X 30-8.8-AA1J		
B	184657	BOLT – RHSSN M10 X 1.5 X 20-8.8-AA1J		
C	136506	BOLT – RHSSN M10 X 1.5 X 25-8.8-AA1J		
D	135799	NUT – HEX FLG CTR LOC M10 X 1.5-10		
E	184714	WASHER – FLAT REG M12-300HV		
F	184667	BOLT – RHSN M12 X 1.75 X 30-8.8-ZINC		
G	152730	BOLT – HEX HD TFL M12 X 1.75 X 35-10.9-AA1J		
H	136431	NUT – HEX FLG CTR LOC M12 X 1.75-10		

501. Kits are available through Whole Goods only.

183 Gleaner® – Ultra Narrow Deflector Completion

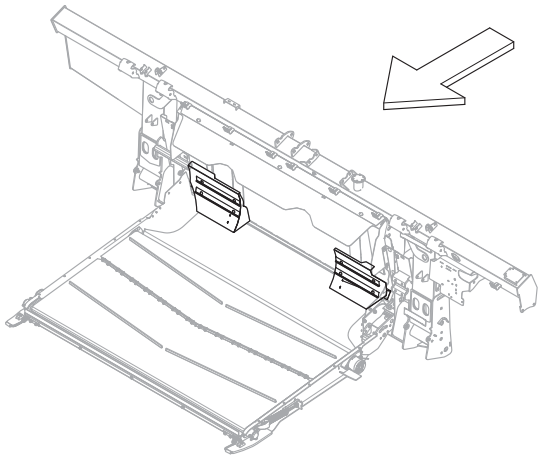

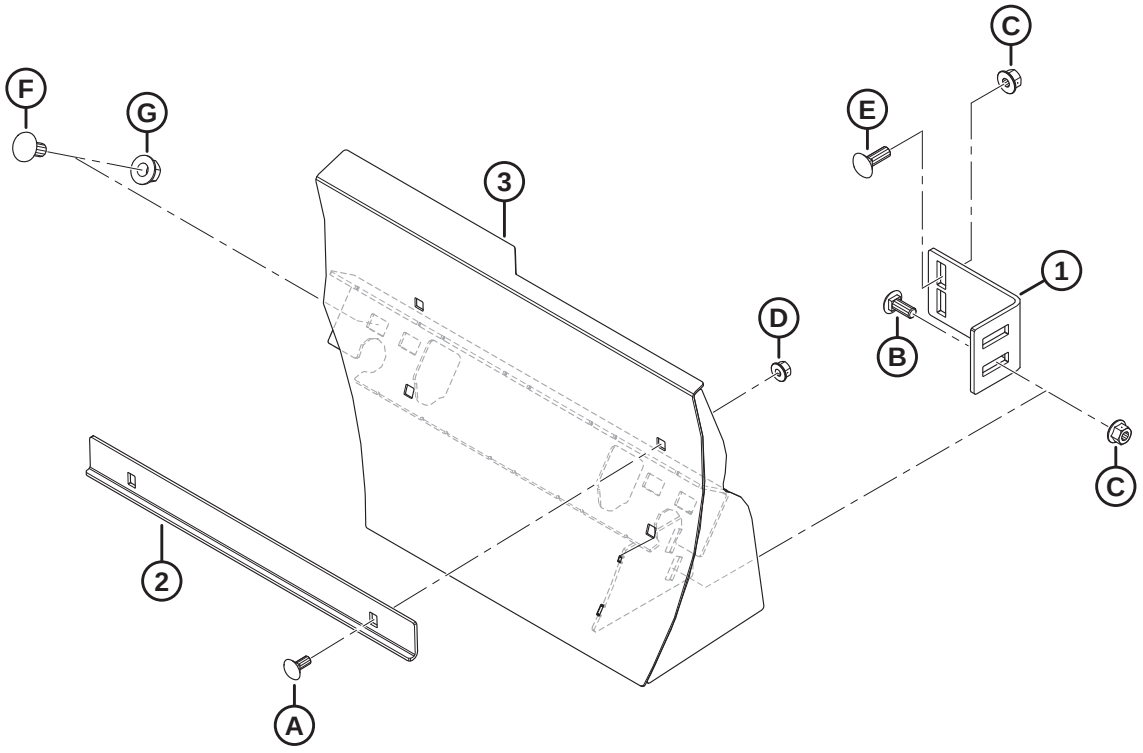

1036634

Ref	Part Number	Description	Qty	Serial Number
	B7314	KIT – DEFLECTORS, ULTRA NARROW [502]		
1	328763	FILLER BRACKET	2	
2	328758	ANGLE – ULTRA LONG STRIPPER	4	
3	328760	DEFLECTOR – ULTRA LONG WELDT RH	1	
	328756	DEFLECTOR – ULTRA LONG WELDT LH	1	
A	197171	BOLT – RHSN M8 X 1.25 X 20-8.8-ZINC		
B	136506	BOLT – RHSSN M10 X 1.5 X 25-8.8-AA1J		
C	135799	NUT – HEX FLG CTR LOC M10 X 1.5-10		
D	135337	NUT – HEX FLG CTR LK M8 X 1.25-8-AA1J		
E	184662	BOLT – RHSN TFL M10 X 1.5 X 30-8.8-AA1J		
F	152439	BOLT – RHSSN M12 X 1.75 X 25-8.8-AA1J		
G	136431	NUT – HEX FLG CTR LOC M12 X 1.75-10		

502. Kits are available through Whole Goods only.

184 Challenger®, Massey Ferguson®, and Gleaner® – Hydraulic/ Electrical Completion

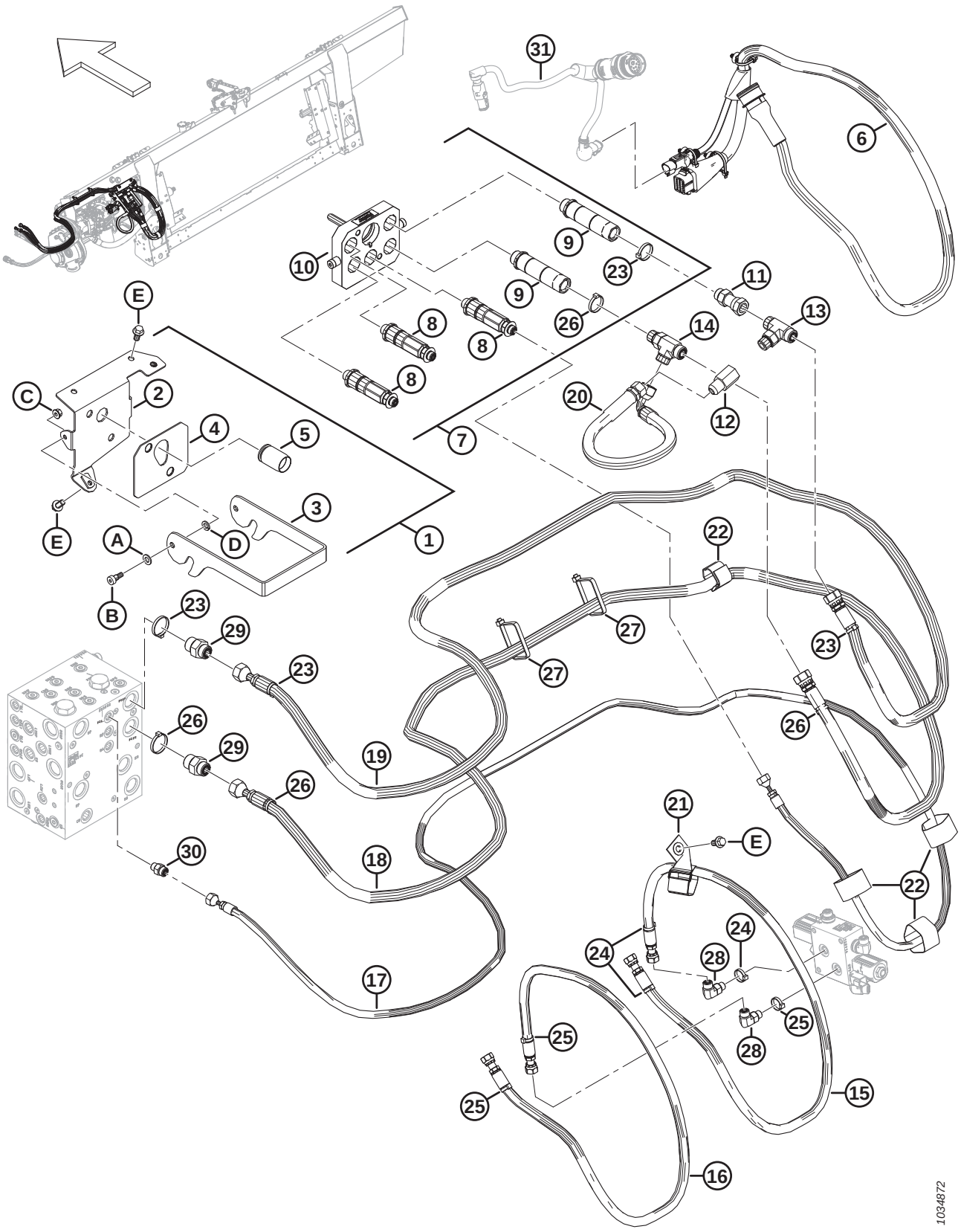

Ref	Part Number	Description	Qty	Serial Number
	B7165	KIT – GLNR/MSSY/CHLNGR HYD ELEC COMP [503]		
1	328872	ASSEMBLY – MCPLR MOUNT AGCO	1	
2	308249	WELDT – COUPLER SUPPORT, AGCO	1	
3	248960	LATCH – COUPLER BRACKET	1	
4	187018	PAD – RUBBER	1	
5	129148	PLUG – RUBBER	1	
6	322386	HARNESS – COMP., AGCO	1	
7	279737	COUPLING – MULTI AGCO 5-POS	1	
8	279011	KIT – COUPLER, 3/8 C/W 3/8 FTG	3	
	279034	SEAL – SHAPED, 3/8 IN.		
9	279012	KIT – COUPLER, 9/16 C/W 5/8 FTG	2	
	279035	SEAL – SHAPED, 9/16 IN.		
10	294098	KIT – COUPLER PLATE ASSY, AGCO		
11	252650	FITTING – ADAPTER HYD	1	
	44210	O-RING – Ø2.46 X Ø19.18		
12	187031	VALVE – CHECK	1	
13	136181	FITTING – BRANCH TEE HYD	1	
	44210	O-RING – Ø2.46 X Ø19.18		
	135867	O-RING – Ø1.78 X Ø15.60		
14	135598	FITTING – TEE HYD STR THD O-RING	1	
	44210	O-RING – Ø2.46 X Ø19.18		
	135867	O-RING – Ø1.78 X Ø15.60		
15	308255	HOSE – HYD, REEL FORE AGCO	1	
16	308254	HOSE – HYD, REEL AFT AGCO	1	
17	308253	HOSE – HYD, REEL LIFT AGCO	1	
18	308252	HOSE – HYD, REEL RET AGCO	1	
19	308251	HOSE – HYD, REEL PRESS AGCO	1	
20	287878	HOSE – HYD, REEL BYPASS	1	
21	163598	CINCH STRAP, HANGING, 6 IN. LG	1	
22	135444	CINCH STRAP 6 IN. LG	4	
23	49232	FASTENER – CABLE TIE, WHITE	4	
24	49227	FASTENER – CABLE TIE, GREEN	3	
25	40702	FASTENER – CABLE TIE, RED	3	
26	40701	FASTENER – CABLE TIE, YELLOW	4	
27	30753	FASTENER – CABLE TIE, BLACK	2	
28	136095	FITTING – ELBOW 90° HYD	2	
	135865	O-RING – Ø1.78 X Ø9.25		
	50219	O-RING – Ø1.98 X Ø11.89		

503. Kits are available through Whole Goods only.

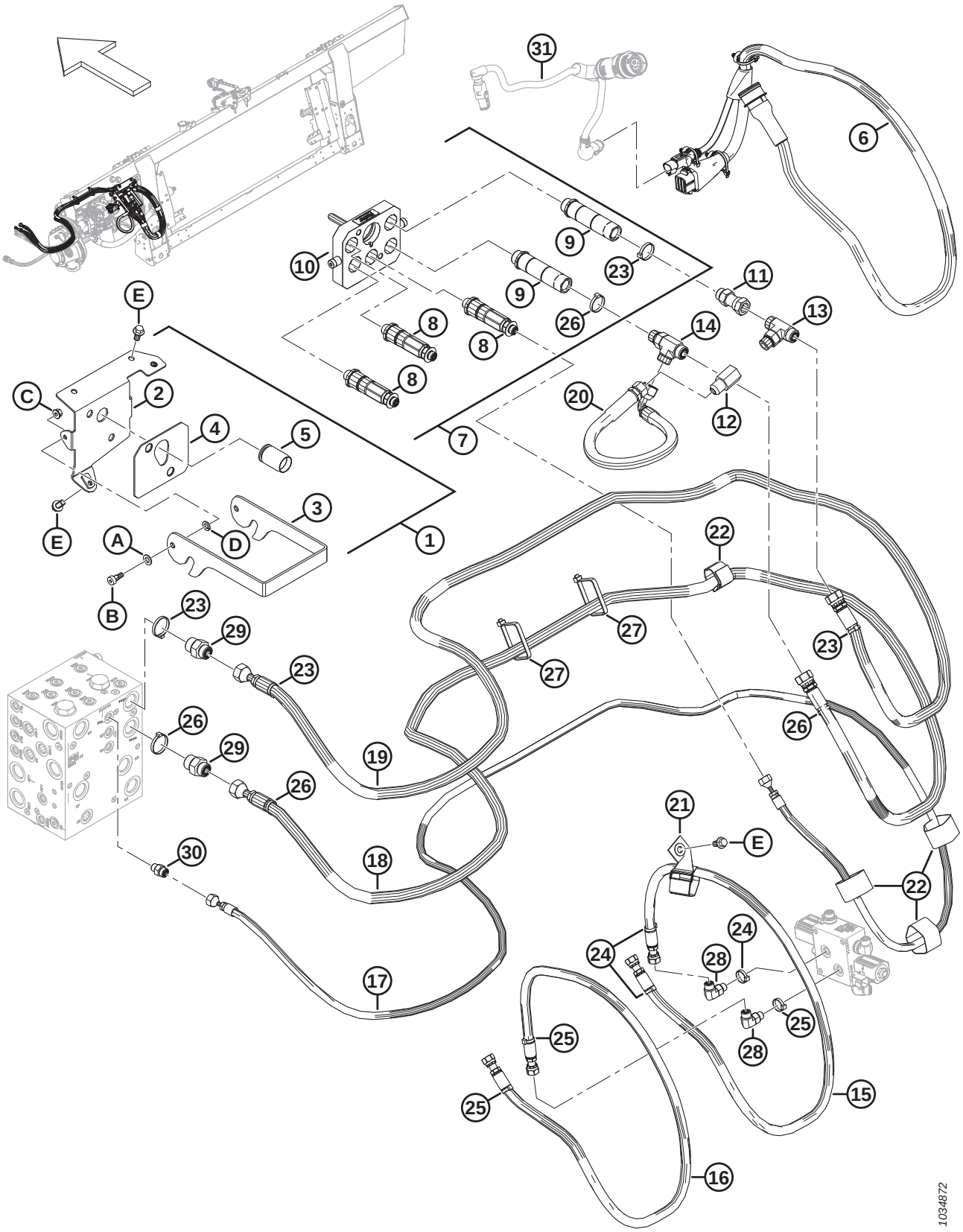
1034872

Ref	Part Number	Description	Qty	Serial Number
29	135786	FITTING – ADAPTER	2	
	30971	O-RING – Ø2.95 X Ø23.47		
	135867	O-RING – Ø1.78 X Ø15.60		
30	135778	FITTING – ADAPTER	1	
	135865	O-RING – Ø1.78 X Ø9.25		
	50219	O-RING – Ø1.98 X Ø11.89		
31	REF	HARNESS – CAB ADAPTER [504]	1	
A	184711	WASHER – FLAT REG M10-200HV-AA1J		
B	135894	SCREW – HEX SOC HD SHLDR M10		
C	135337	NUT – HEX FLG CTR LK M8 X 1.25-8-AA1J		
D	30632	WASHER – LOCK SPRING M10		
E	152655	BOLT – HEX FLG HD M10 X 1.5 X20-8.8-AA1J		

504. For the harness, refer to Section *179 Electrical – Base, page 435*.

185 IDEAL™ Series – Float Module Completion

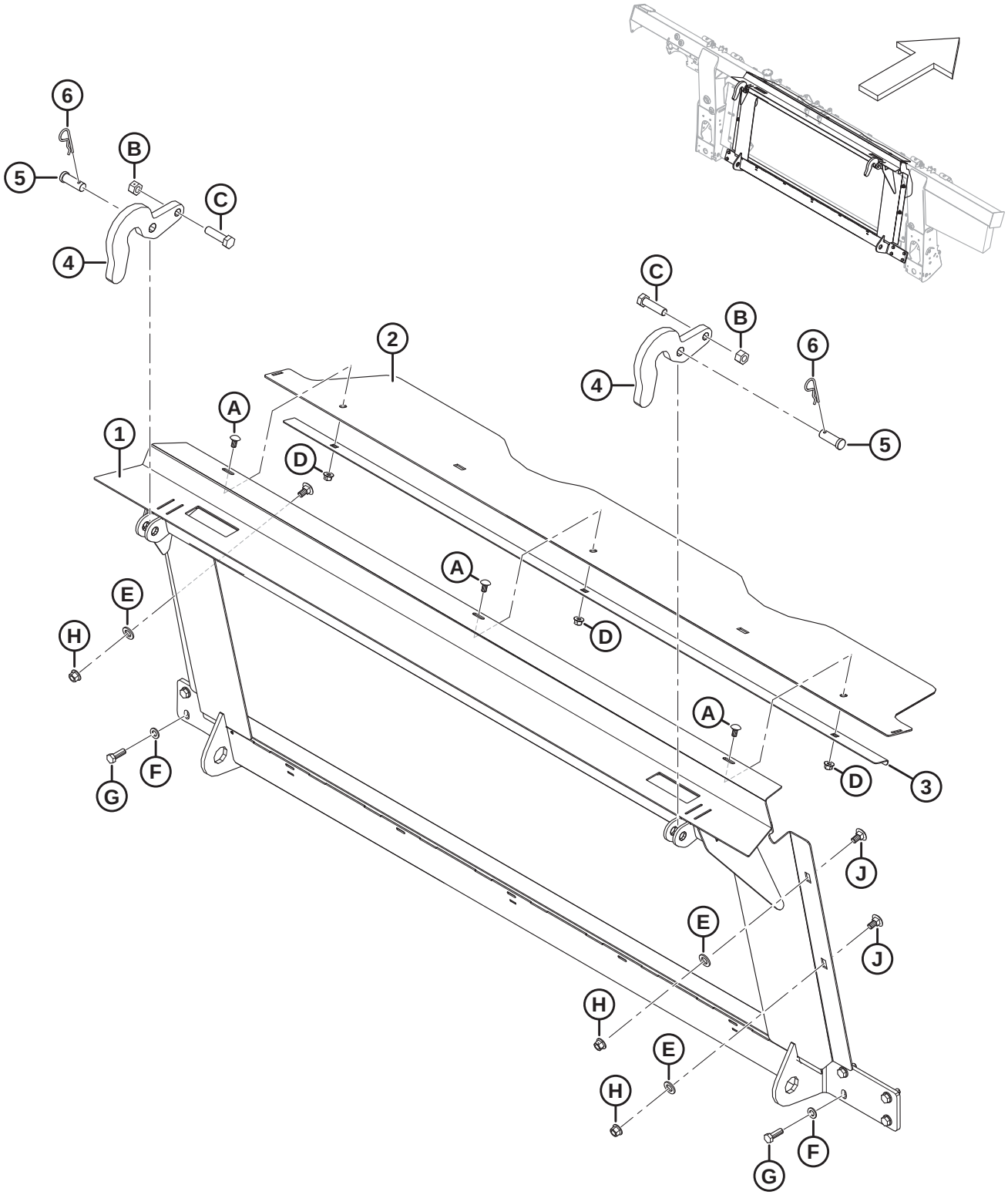

Ref	Part Number	Description	Qty	Serial Number
	B7107	KIT – IDEAL TRANSITION FRAME [505]		
1	314678	FRAME – IDEAL TRANSITION W/ DECAL	1	
2	**357195**	**COVER – FEED AUGER TOP**	**1**	
3	301629	RETAINER – DUST COVER	1	
4	301451	SUPPORT – HOOK	2	
5	158080	PIN – CLEVIS	2	
6	13125	PIN – HAIR	2	
A	184657	BOLT – RHSSN M10 X 1.5 X 20-8.8-AA1J		
B	136476	NUT – HEX CTR LOC M16 X 2-8		
C	136141	BOLT – HEX HD M16 X 2 X 60-8.8-AA1J		
D	135799	NUT – HEX FLG CTR LOC M10 X 1.5-10		
E	184717	WASHER – FLAT REG M16-200HV-AA1J		
F	184714	WASHER – FLAT REG M12-300HV		
G	152730	BOLT – HEX HD TFL M12 X 1.75 X 35-10.9-AA1J		
H	136431	NUT – HEX FLG CTR LOC M12 X 1.75-10		
J	135903	BOLT – RHSN M12 X 1.75 X 25-8.8-ZINC		

505. Kits are available through Whole Goods only.

186 IDEAL™ Series – Hydraulic/Electrical Completion

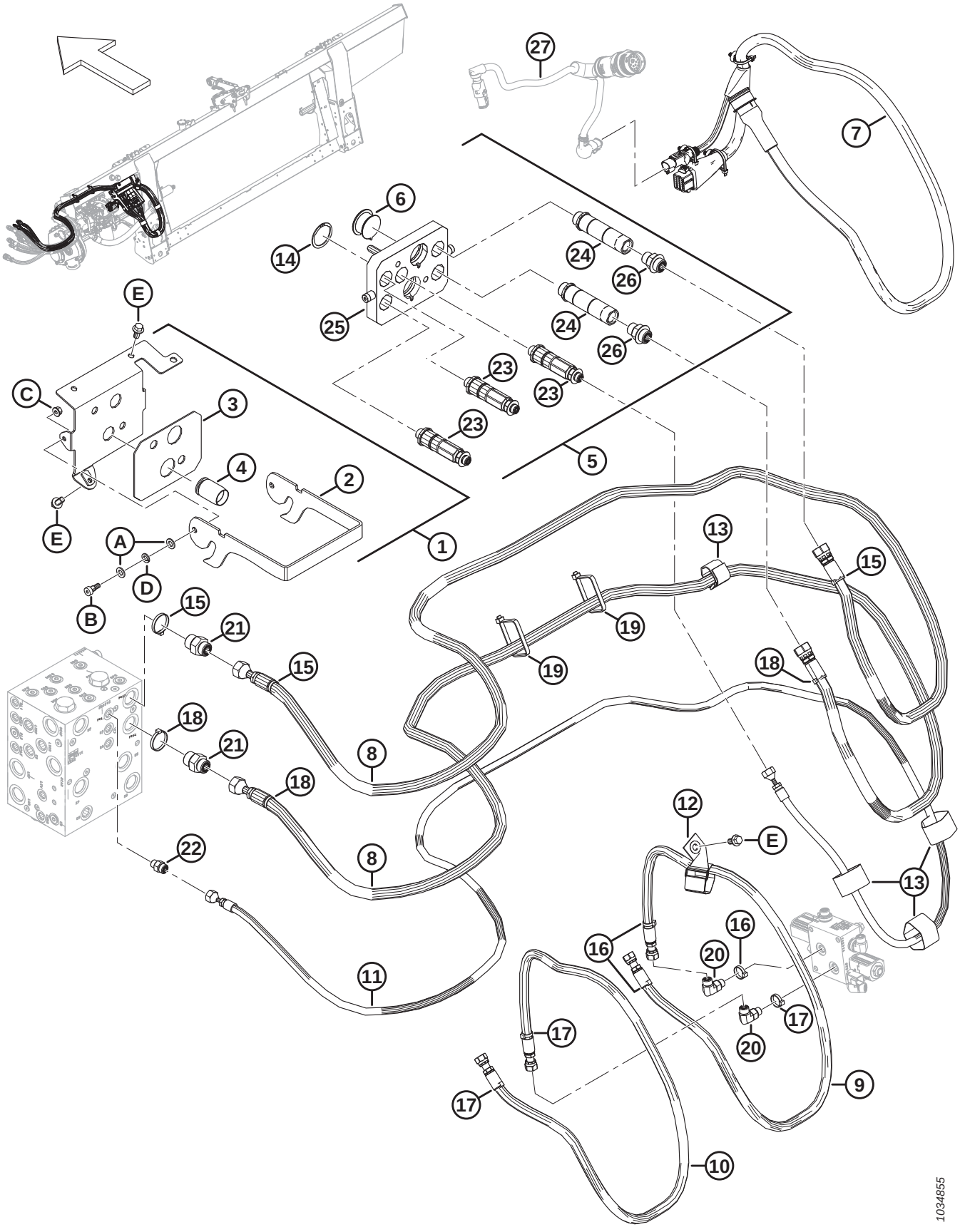

Ref	Part Number	Description	Qty	Serial Number
	B7109	KIT – IDEAL HYD ELEC COMPLETION [506]		
1	337981	ASSEMBLY – MULTI CPLR MOUNT	1	
2	337980	LATCH – MULTICOUPLER	1	
3	302030	PAD – RUBBER	1	
4	129148	PLUG – RUBBER	1	
5	335008	COUPLING – MULTI, AGCO 5-POS	1	
6	328968	CAP – HD34 PLUG	1	
7	328908	HARNESS – COMP., IDEAL	1	
8	328887	HOSE – HYD, REEL DRIVE IDEAL	2	
9	308255	HOSE – HYD, REEL FORE AGCO	1	
10	308254	HOSE – HYD, REEL AFT AGCO	1	
11	308253	HOSE – HYD, REEL LIFT AGCO	1	
12	163598	CINCH STRAP, HANGING, 6 IN. LG	1	
13	135444	CINCH STRAP 6 IN. LG	4	
14	135267	RING – INVERTED EXT RETAINING	1	
15	49232	FASTENER – CABLE TIE, WHITE	3	
16	49227	FASTENER – CABLE TIE, GREEN	3	
17	40702	FASTENER – CABLE TIE, RED	3	
18	40701	FASTENER – CABLE TIE, YELLOW	3	
19	30753	FASTENER – CABLE TIE, BLACK	2	
20	136095	FITTING – ELBOW 90° HYD	2	
	135865	O-RING – Ø1.78 X Ø9.25		
	50219	O-RING – Ø1.98 X Ø11.89		
21	135786	FITTING – ADAPTER	2	
	30971	O-RING – Ø2.95 X Ø23.47		
	135867	O-RING – Ø1.78 X Ø15.60		
22	135778	FITTING – ADAPTER	1	
	135865	O-RING – Ø1.78 X Ø9.25		
	50219	O-RING – Ø1.98 X Ø11.89		
23	279011	KIT – COUPLER, 3/8 C/W 3/8 FTG	3	
	279034	SEAL – SHAPED, 3/8 IN.		
24	279012	KIT – COUPLER, 9/16 C/W 5/8 FTG	2	
	279035	SEAL – SHAPED, 9/16 IN.		
25	294394	KIT – COUPLER PLATE ASSY, AGCO	1	
26	184461	FITTING – ADAPTER	2	
	44210	O-RING – Ø2.46 X Ø19.18		
	135867	O-RING – Ø1.78 X Ø15.60		
27	REF	HARNESS – CAB ADAPTER [507]	1	
A	184711	WASHER – FLAT REG M10-200HV-AA1J		

506. Kits are available through Whole Goods only.
507. For the harness, refer to Section *179 Electrical – Base, page 435*.

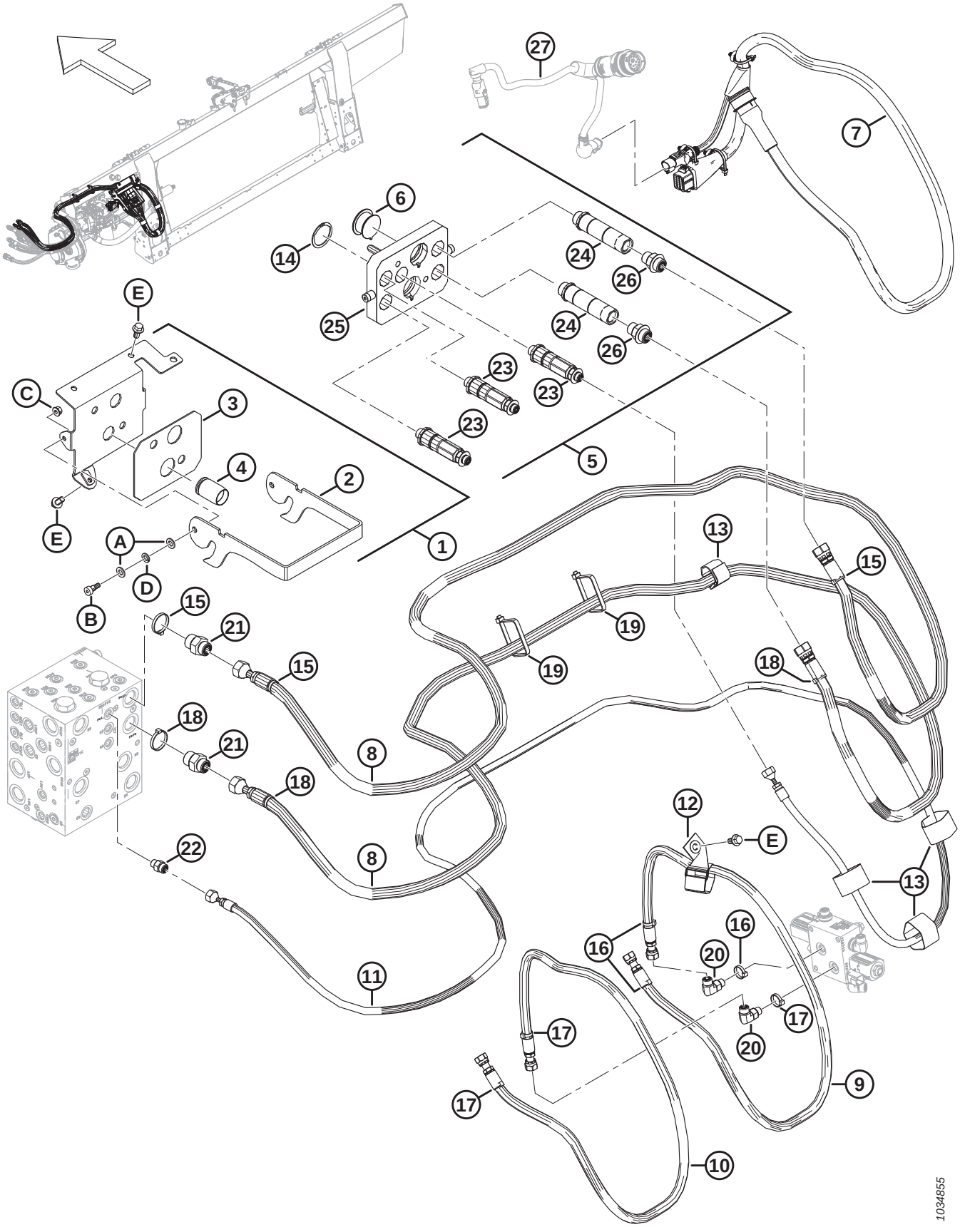
1034855

Ref	Part Number	Description	Qty	Serial Number
B	135894	SCREW – HEX SOC HD SHLDR M10		
C	135337	NUT – HEX FLG CTR LK M8 X1.25-8-AA1J		
D	30632	WASHER – LOCK SPRING M10		
E	152655	BOLT – HEX FLG HD M10 X 1.5 X 20-8.8-AA1J		

187 Challenger®, Massey Ferguson®, and IDEAL™ Series – Auger Completion

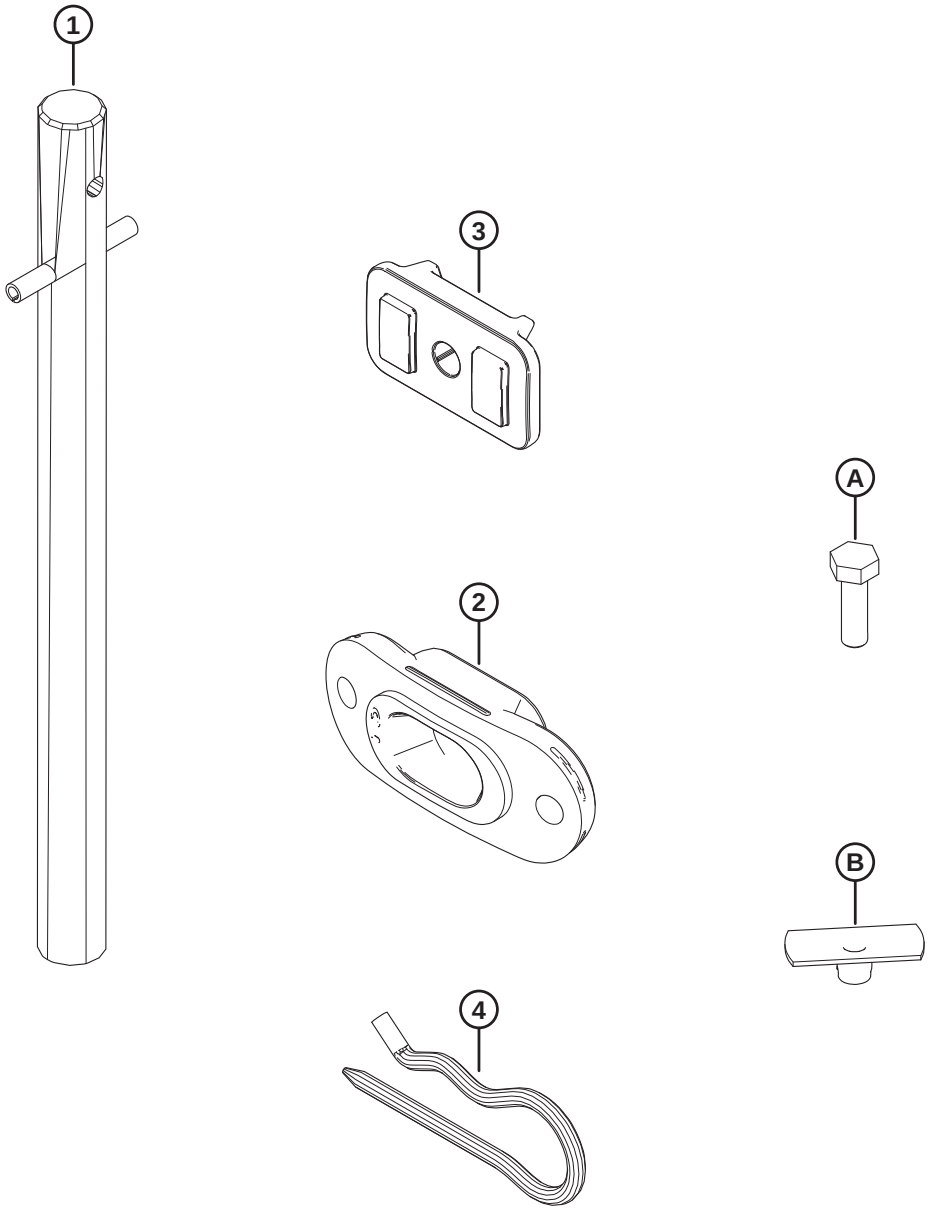

1034850

Ref	Part Number	Description	Qty	Serial Number
1	337152	KIT – FINGER	8	
	7642	PIN – SPRING 3/16 DIA X 1.5 LG	8	
2	337143	GUIDE	8	
3	213084	PLUG – FLIGHTING SLOT	8	
4	123180	PIN – HAIR	8	
A	252703	BOLT – HEX HD TFL M6 X 1 X 20 X SPCL-12.9-AF0C		
B	197263	NUT – TEE M6 X 1		

188 Case – Float Module Completion

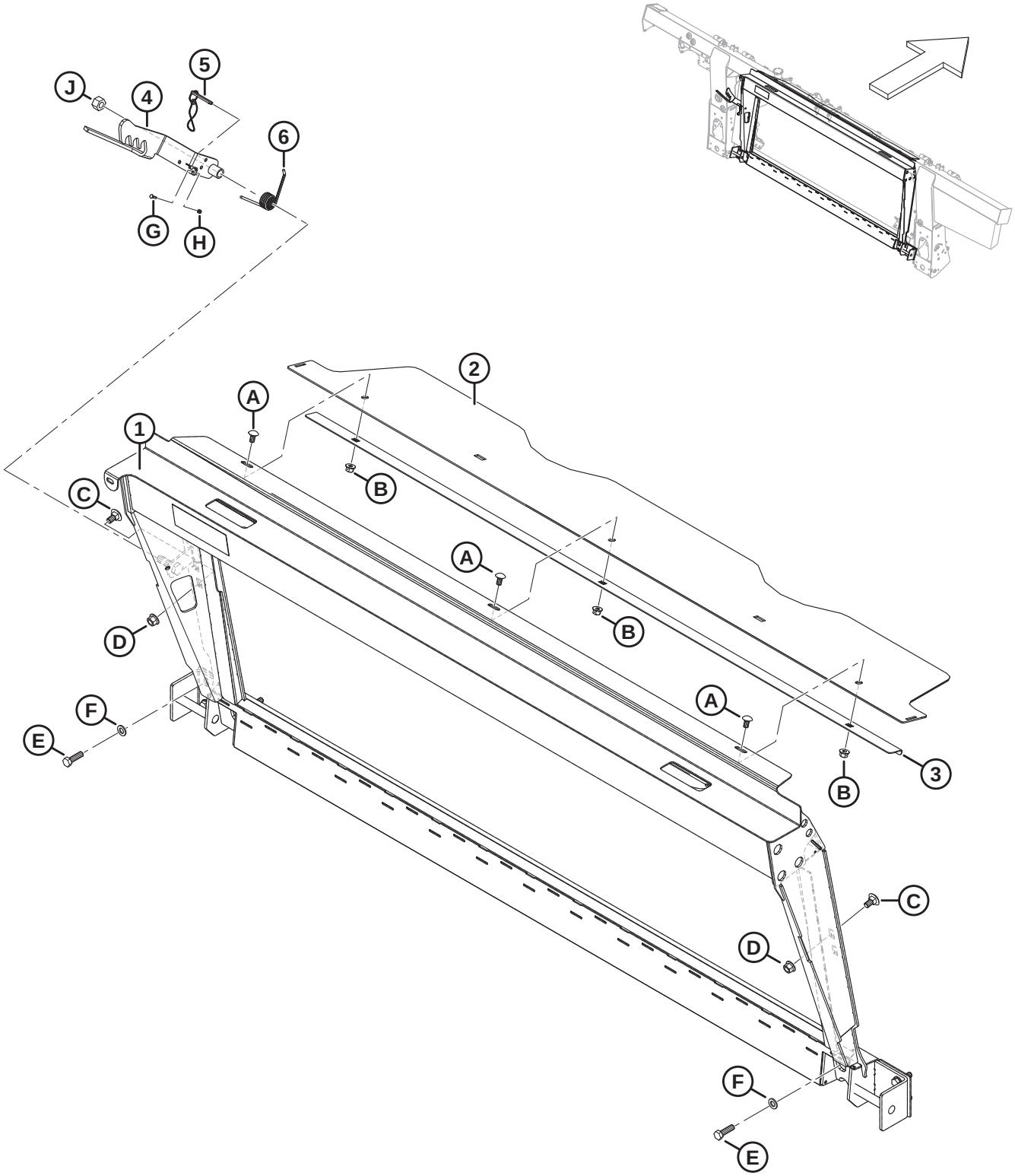

1034925

Ref	Part Number	Description	Qty	Serial Number
	B7043	KIT – CNH TRANSITION FRAME [508]		
1	347300	ASSY – CNH TRANSITION W/ DECAL	1	
2	**357195**	**COVER – FEED AUGER TOP**	**1**	
3	301629	RETAINER – DUST COVER	1	
4	347141	LATCH – WELDT	1	
5	237363	PIN – DETENT WITH 8 IN. LANYARD	1	
6	156948	SPRING – TORSION	1	
A	184657	BOLT – RHSSN M10 X 1.5 X 20-8.8-AA1J		
B	135799	NUT – HEX FLG CTR LOC M10 X 1.5-10		
C	135903	BOLT – RHSN M12 X 1.75 X 25-8.8-ZINC		
D	136431	NUT – HEX FLG CTR LOC M12 X 1.75-10		
E	184669	BOLT – HEX HD M12 X 1.75 X 40-8.8-AA1J		
F	184714	WASHER – FLAT REG M12-300HV		
G	197319	BOLT – HEX HD TFL M4 X 0.7 X 16-8.8-AA1J		
H	197320	NUT – HEX NYLOC M4 X 0.7-8-AA1J		
J	136476	NUT – HEX CTR LOC M16 X 2-8		

508. Kits are available through Whole Goods only.

189 Case – Hydraulic/Electrical Completion

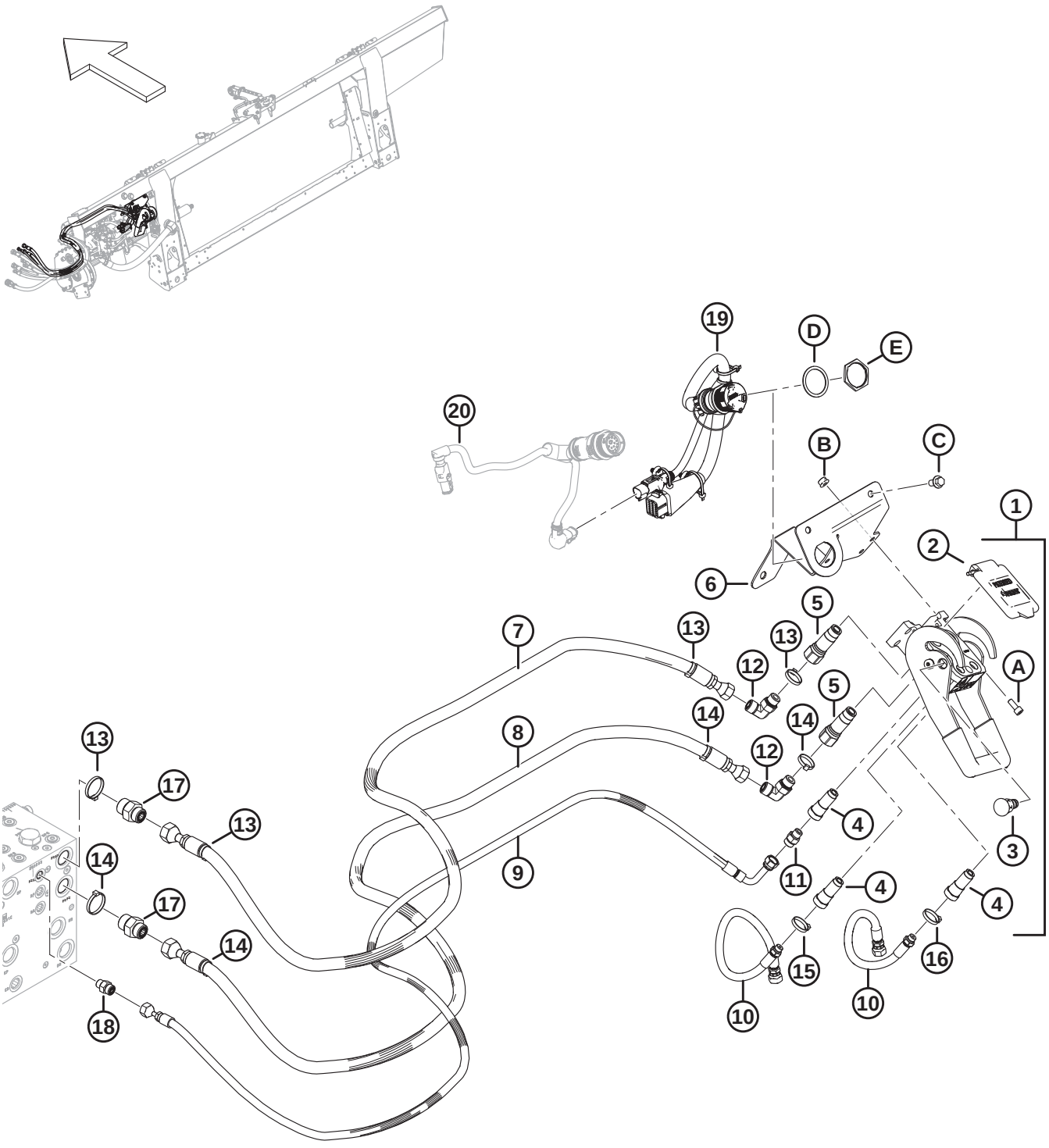

1032777

Ref	Part Number	Description	Qty	Serial Number
	B7056	KIT – CNH HYD ELEC COMPLETION [509]		
1	153151	COUPLING – MULTI [510]	1	
2	129800	KIT – COVER CNH MULTI-COUPLER	1	
3	129801	KIT – LATCH BUTTON	1	
4	129976	COUPLING 1/4 IN.	3	
5	129977	COUPLING 3/8 IN.	2	
6	328874	SUPPORT WELDT – CNH MULTI COUPLER	1	
7	314586	HOSE – HYD, REEL DRIVE PRESSURE CNH	1	
8	314587	HOSE – HYD, REEL DRIVE RETURN CNH	1	
9	314588	HOSE – HYD, REEL LIFT, CNH	1	
10	314585	HOSE – HYD, REEL F-A, CNH	2	
11	252694	FITTING – ADAPTER .052 ORIFICE	1	
12	136220	FITTING – ELBOW 90° HYD	2	
	44209	O-RING – Ø2.21 X Ø16.36		
	135866	O-RING – Ø1.78 X Ø12.42		
13	49232	FASTENER – CABLE TIE, WHITE	4	
14	40701	FASTENER – CABLE TIE, YELLOW	4	
15	40702	FASTENER – CABLE TIE, RED	2	
16	49227	FASTENER – CABLE TIE, GREEN	2	
17	135786	FITTING – ADAPTER	2	
	50219	O-RING – Ø1.98 X Ø11.89		
	135865	O-RING – Ø1.78 X Ø9.25		
18	135778	FITTING – ADAPTER	1	
	50219	O-RING – Ø1.98 X Ø11.89		
	135865	O-RING – Ø1.78 X Ø9.25		
19	322384	HARNESS – COMP., CNH	1	
20	REF	HARNESS – CAB ADAPTER [511]	1	
A	167307	SCREW – HEX SOC HD M8 X 1.25 X 20-8.8-AA1J		
B	135337	NUT – HEX FLG CTR LK M8 X 1.25-8-AA1J		
C	136151	BOLT – HEX FLG HD TFL M10 X 1.5 X 16-8.8-AA1J		
D	134011	WASHER – LOCK SPRING, DEUTSCH HD, SIZE 24	1	
E	134010	NUT – PANEL, HD 30, SIZE 24	1	

509. Kits are available through Whole Goods only.
510. The multicoupler includes CNH multi-coupler cover kit (MD #129800), latch button kit (MD #129801), three 1/4 inch couplings (MD #129976), and two 3/8 inch coupling (MD #129977).
511. For the harness, refer to Section *179 Electrical – Base, page 435*.

190 Case IH 2300/2500 Series – Float Module Completion

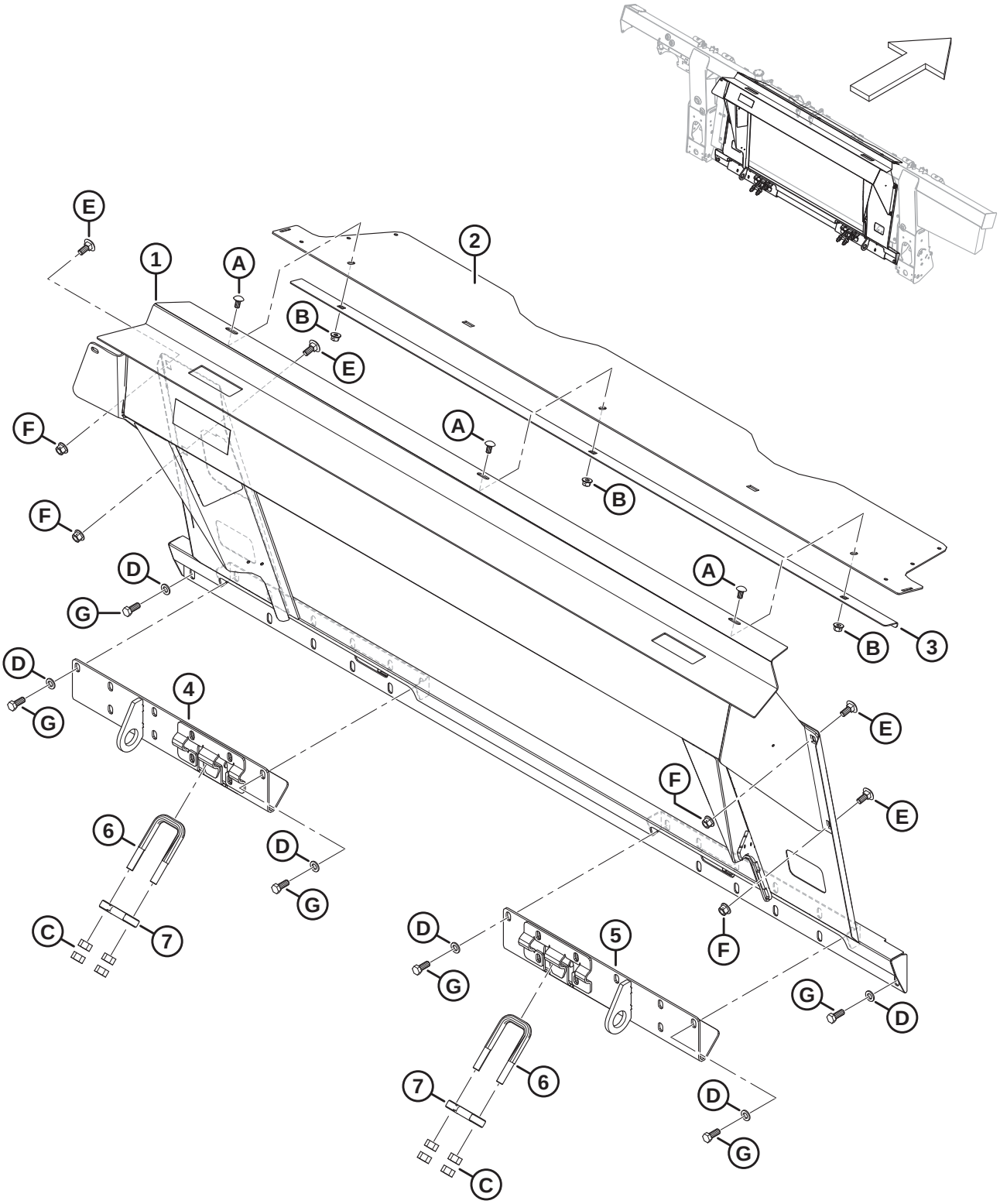

Ref	Part Number	Description	Qty	Serial Number
	B7315	KIT – CIH 23/25 TRANSITION FRAME [512]		
1	347731	FRAME – CIH W/ DECAL	1	
2	357195	COVER – FEED AUGER TOP	1	
3	301629	RETAINER – DUST COVER	1	
4	347964	ANCHOR – WELDT LH	1	
5	347965	ANCHOR – WELDT RH	1	
6	133242	BOLT – U	2	
7	133241	LATCH – 2300 SERIES COMBINE	2	
A	184657	BOLT – RHSSN M10 X 1.5 X 20-8.8-AA1J		
B	135799	NUT – HEX FLG CTR LOC M10 X 1.5-10		
C	18592	NUT – HEX 5/8-11 UNC-GR 5-ZINC		
D	184714	WASHER – FLAT REG M12-300HV		
E	184667	BOLT – RHSN M12 X 1.75 X 30-8.8-ZINC		
F	136431	NUT – HEX FLG CTR LOC M12 X 1.75-10		
G	30630	BOLT – HEX HD TFL M12 X 1.75 X 30-8.8-A3L		

512. Kits are available through Whole Goods only.

191 Case IH 2300/2500 Series – Hydraulic/Electrical Completion

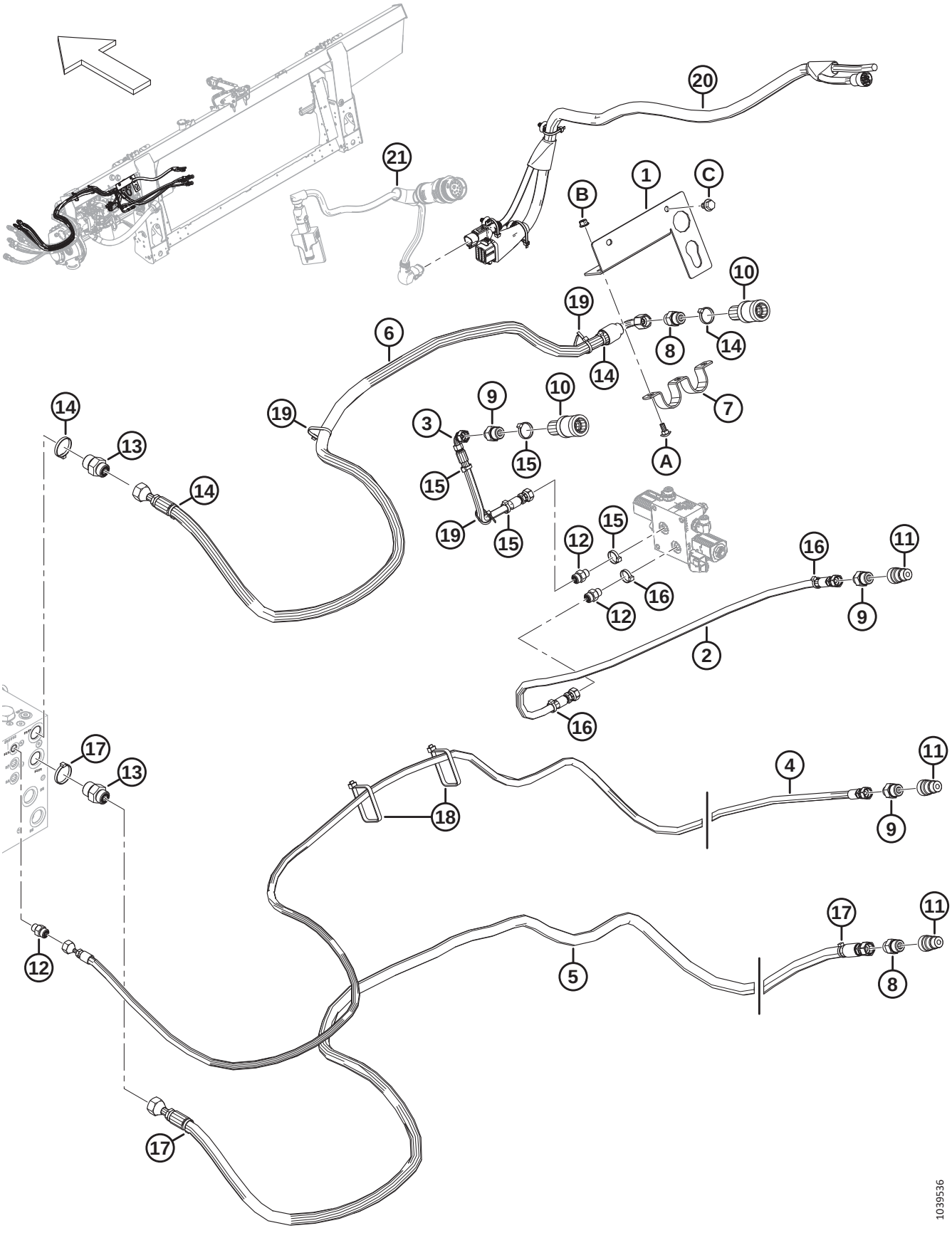

Ref	Part Number	Description	Qty	Serial Number
	B7316	KIT – CIH 23/25 HYD/ELEC [513]		
1	347796	SUPPORT – CONNECTOR	1	
2	323387	HOSE – HYD	1	
3	323386	HOSE – HYD	1	
4	323385	HOSE – HYD	1	
5	323384	HOSE – HYD	1	
6	323383	HOSE – HYD	1	
7	322695	HOLDER	1	
8	184463	FITTING – ADAPTER HYD	2	
	44210	O-RING – 2.46 X 19.18		
	135866	O-RING – 1.78 X 12.42		
9	184462	FITTING – ADAPTER HYD	3	
10	114143	FITTING – COUPLING HYD	2	
11	114142	FITTING – COUPLING HYD	3	
12	135778	FITTING – ADAPTER	3	
	50219	O-RING – 1.98 X 11.89		
	135865	O-RING – 1.78 X 9.25		
13	135786	FITTING – ADAPTER	2	
	50219	O-RING – Ø1.98 X Ø11.89		
	135865	O-RING – Ø1.78 X Ø9.25		
14	49232	FASTENER – CABLE TIE, WHITE	4	
15	49227	FASTENER – CABLE TIE, GREEN	4	
16	40702	FASTENER – CABLE TIE, RED	3	
17	40701	FASTENER – CABLE TIE, YELLOW	3	
18	30753	FASTENER – CABLE TIE, BLACK	2	
19	21763	FASTENER – CABLE TIE, BLACK	3	
20	335663	HARNESS – COMP CIH 23XX/25XX	1	
21	REF	HARNESS – CAB ADAPTER [514]	1	
	REF	MODULE – VALVE DRIVER [514]	1	
A	197171	BOLT – RHSN M8 X 1.25 X 20-8.8-ZINC		
B	135337	NUT – HEX FLG CTR LK M8 X 1.25-8-AA1J		
C	136151	BOLT – HEX FLG HD TFL M10 X 1.5 X 16-8.8-AA1J		

513. Kits are available through Whole Goods only.
514. For the adapter harness, valve driver module, and hardware, refer to Section *179 Electrical – Base, page 435*.

192 CLAAS – Float Module Completion

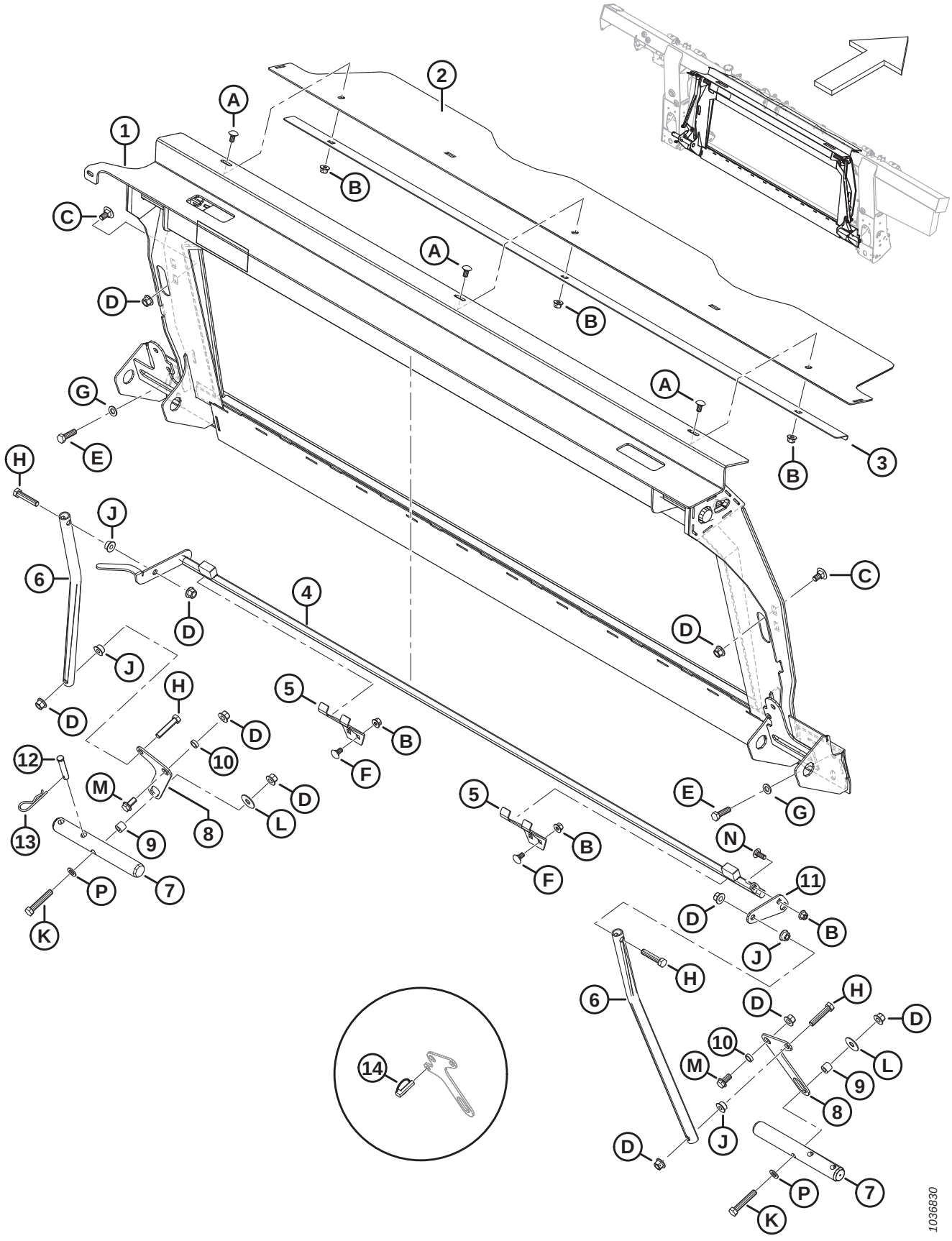

Ref	Part Number	Description	Qty	Serial Number
	B7045	KIT – CLAAS TRANSITION FRAME [515]		
1	347077	FRAME – CLAAS TRNSN W/ DECAL	1	
2	**357195**	**COVER – FEED AUGER TOP**	**1**	
3	301629	RETAINER – DUST COVER	1	
4	337311	LATCH – TRANSFER WELDT	1	
5	245246	SUPPORT – LOCK KEEPER	2	
6	156783	TUBE – LINK	2	
7	133138	SHAFT	2	
8	**304669**	**LEVER – PIVOT**	**2**	
9	337043	BUSHING – M12 THREADED	2	
10	133439	SPACER – 0.75 OD X 0.120 IN WALL	2	
11	328582	LEVER	1	
12	19809	PIN – CLEVIS	1	
13	13125	PIN – HAIR	1	
14	113561	PIN – LYNCH [516]	**A/R**	
A	184657	BOLT – RHSSN M10 X 1.5 X 20-8.8-AA1J		
B	135799	NUT – HEX FLG CTR LOC M10 X 1.5-10		
C	135903	BOLT – RHSN M12 X 1.75 X 25-8.8-ZINC		
D	136431	NUT – HEX FLG CTR LOC M12 X 1.75-10		
E	184669	BOLT – HEX HD M12 X 1.75 X 40-8.8-AA1J		
F	136178	BOLT – RHSN M10 X 1.5 X 20-8.8-AA1J		
G	184714	WASHER – FLAT REG M12-300HV		
H	237316	BOLT – HEX HD TFL M12 X 1.75 X 60-8.8-AA1J		
J	136036	NUT – HEX SM FLG M12 X 1.75-8-AA1J		
K	184675	BOLT – HEX HD M12 X 1.75 X 70-8.8-AA1J		
L	32247	WASHER – FLAT		
M	136625	BOLT – HEX SER FLG HD M12 X 1.75 X 25 X SPCL-100-AA1J		
N	136506	BOLT – RHSSN M10 X 1.5 X 25-8.8-AA1J		
P	**184714**	**WASHER – FLAT REG M12-300HV**		

515. Kits are available through Whole Goods only.
516. Service part only for 2022 and prior units with superseded pivot lever (MD #347569).

193 CLAAS – Hydraulic/Electrical Completion (2022 and Prior)

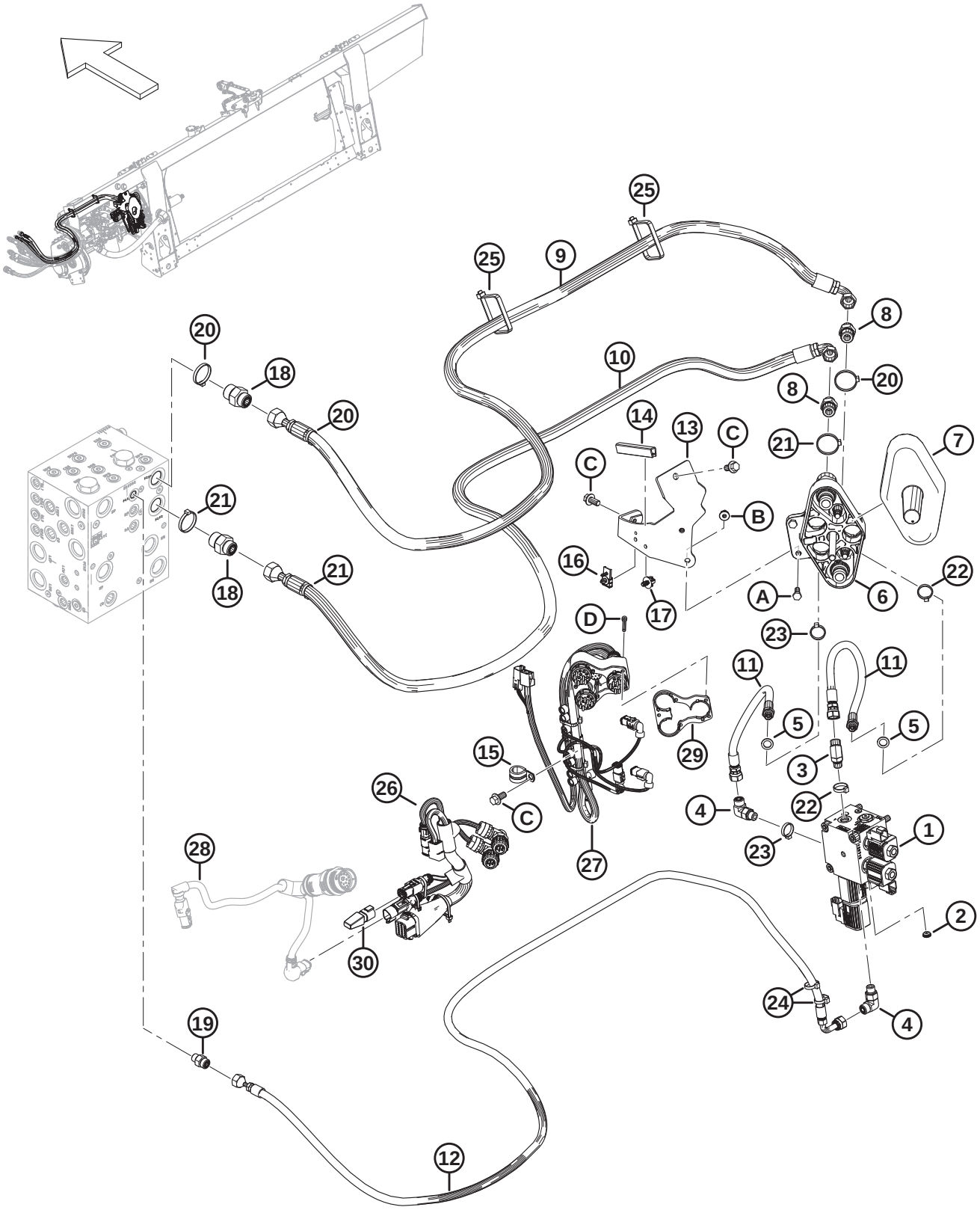

Ref	Part Number	Description	Qty	Serial Number
	B7058	KIT – CLAAS/LEXION HYD ELEC COMPLETION [517]		
	REF	**KIT – CLAAS/LEXION HYD COMPLETION** [518]		
	REF	**KIT – CLAAS/LEXION ELEC COMPLETION** [519]		
1	328548	VALVE – SELECTOR, CLAAS	1	
	287456	VALVE – 3-POS 4-WAY		
	287460	VALVE – NC POPPET		
	287461	COIL – 12VDC - .500 IN.		
	287462	COIL – 12VDC - .625 IN.		
	279228	VALVE – CARTRIDGE, PO CHECK		
	320284	O-RING – 2.38 X 20.64		
	136108	SCREW – HEX SOC HD M10 X 1.5 X 80-12.9-AA1J	3	
	184711	**WASHER – FLAT REG M10-200HV-AA1J**	**3**	
2	252693	RESTRICTOR – #6 ORB X .052 IN.	1	
3	136144	FITTING – ELBOW 45° HYD	1	
4	136095	FITTING – ELBOW 90° HYD	2	
	135865	O-RING – Ø1.78 X Ø9.25		
	50219	O-RING – Ø1.98 X Ø11.89		
5	320195	SEAL – BONDED WASHER	2	
6	190866	COUPLER – LEXION MULTI LINK	1	
7	129481	COVER	1	
8	184463	FITTING – ADAPTER HYD	2	
	44210	O-RING – Ø2.46 X Ø19.18		
	135866	O-RING – Ø1.78 X Ø12.42		
9	314821	HOSE – HYD, REEL PRESSURE CLAAS	1	
10	314820	HOSE – HYD, REEL RETURN CLAAS	1	
11	314819	HOSE – HYD, REEL POSITION CLAAS	2	
12	314817	HOSE – HYD, REEL LIFT CLAAS	1	
13	**347954**	**SUPPORT – COUPLER WELDMENT**	**1**	
14	162116	SEAL – EDGE TRIM	1	
15	135709	CLAMP – INSULATED 3/4 IN.	1	
16	134612	CLIP – RECEPTACLE MOUNT	1	
17	136655	FASTENER – FIR TREE MT W/ TIE	1	
18	135786	FITTING – ADAPTER	2	
	50219	O-RING – Ø1.98 X Ø11.89		
	135865	O-RING – Ø1.78 X Ø9.25		

517. Kit (MD #B7058) is not current after model year 2022 and has been replaced with hydraulic completion kit (MD #B7406) and electrical completion kit (MD #B7405) for model year 2023 and later. Kits are available through Whole Goods only.
518. For model year 2023 and later CLAAS hydraulic completion kit service parts, refer to Section *194 CLAAS – Hydraulic Completion (2023 and Later), page 473*.
519. For model year 2023 and later CLAAS electrical completion kit service parts, refer to Section *195 CLAAS – Electrical Completion (2023 and Later), page 477*.

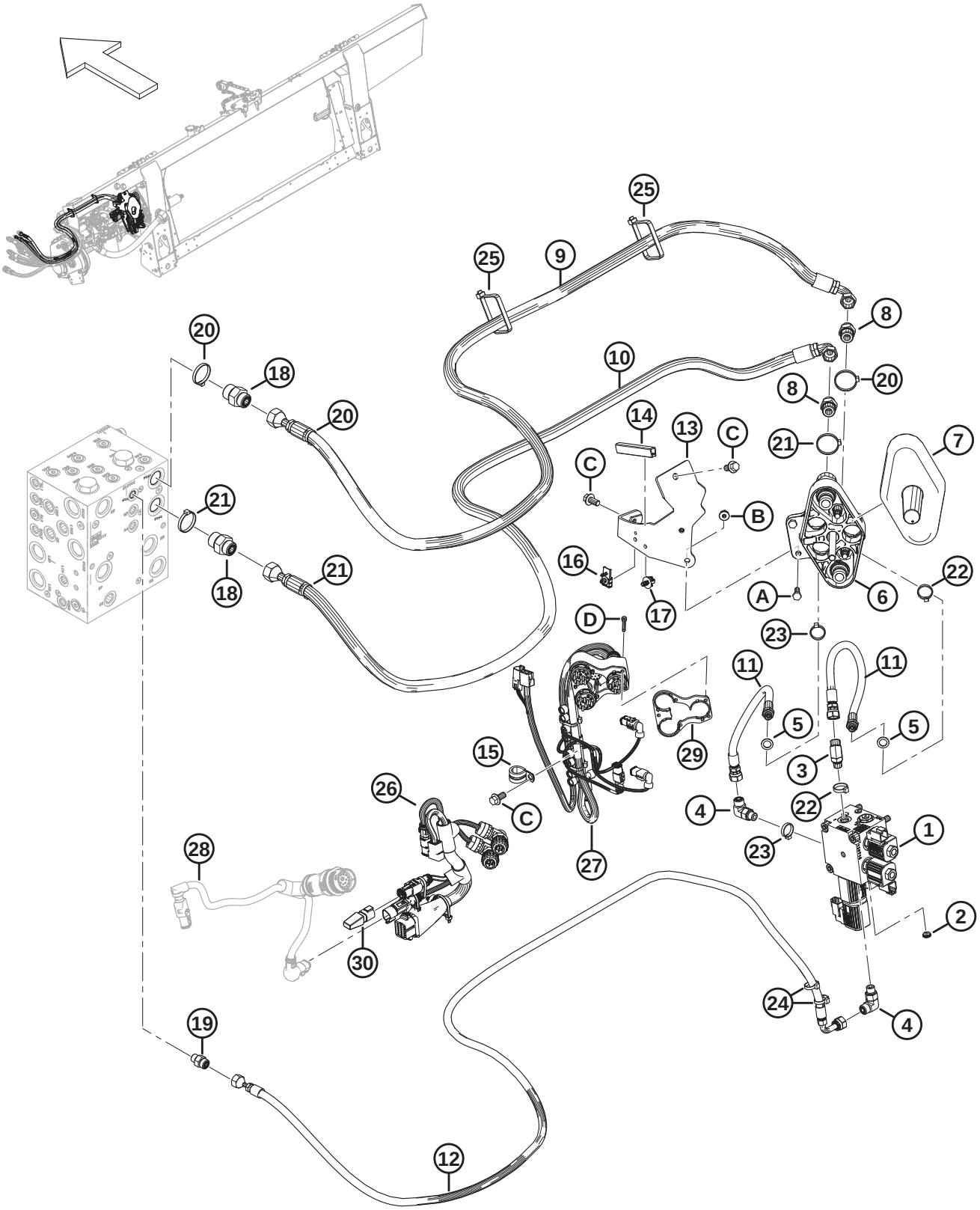
1039482

Ref	Part Number	Description	Qty	Serial Number
19	135778	FITTING – ADAPTER	1	
	50219	O-RING – Ø1.98 X Ø11.89		
	135865	O-RING – Ø1.78 X Ø9.25		
20	49232	FASTENER – CABLE TIE, WHITE	3	
21	40701	FASTENER – CABLE TIE, YELLOW	3	
22	40704	FASTENER – CABLE TIE, ORANGE	2	
23	40703	FASTENER – CABLE TIE, BLUE	2	
24	21763	FASTENER – CABLE TIE, BLACK	2	
25	30753	FASTENER – CABLE TIE, BLACK	2	
26	335431	HARNESS – COMP., CLAAS	1	
27	276630	HARNESS – COUPLER, CLAAS [520]	1	
	213824	HARNESS – LEXION COUPLER MOD [521]		
	129772	HARNESS – WIRING, CLAAS [521]		
28	REF	HARNESS – CAB ADAPTER [522]	1	
	REF	**MODULE – VALVE DRIVER** [522]	**1**	
	REF	**WASHER – LOCK, HDP 20, SIZE 24** [522]	**1**	
	REF	**NUT – PANEL, HDP 20, SIZE 24** [522]	**1**	
29	129773	SPACER – WIRING HARNESS	1	
30	**283215**	**DIODE PACK – 6A DIODE**	**1**	
	REF	**KIT – INTEGRATION, CLAAS** [523]	**1**	
A	184652	BOLT – HEX HD TFL M8 X 1.25 X 25-8.8-AA1J		
B	135337	NUT – HEX FLG CTR LK M8 X 1.25-8-AA1J		
C	152655	BOLT – HEX FLG HD M10 X 1.5 X 20-8.8-AA1J		
D	129965	SCREW – HEX SOC HD M5 X 0.8 X 45		

520. Includes harness MD #213824 and harness MD #129772.
521. Service part for CLAAS harness MD #276630.
522. For the harness, valve driver module, and hardware, refer to Section *179 Electrical – Base, page 435*.
523. The CLAAS integration kit is available as an option for model year 2022 and prior machines. For service parts, refer to Section *215 (Option) Integration Kit – CLAAS, page 521*.

194 CLAAS – Hydraulic Completion (2023 and Later)

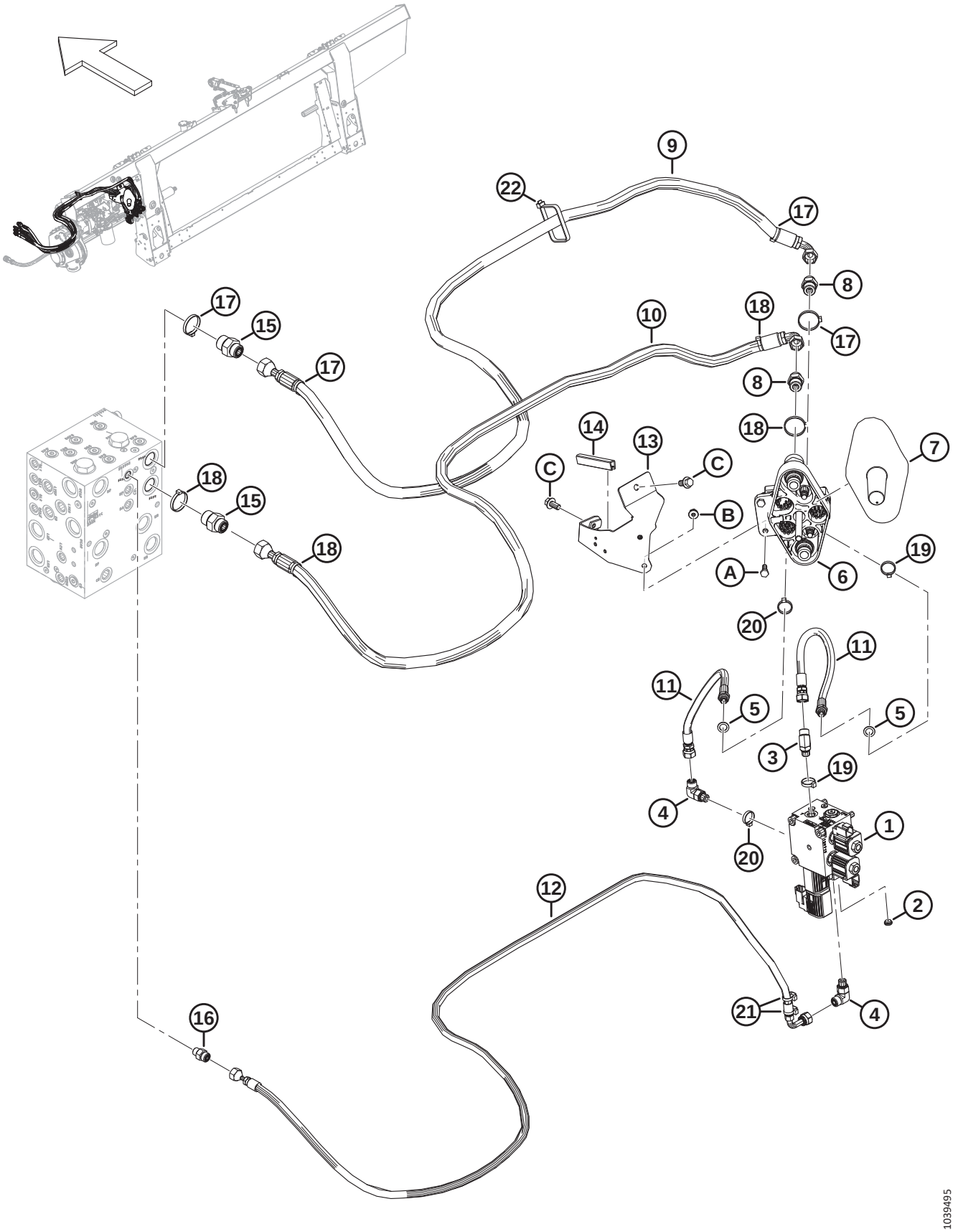

Ref	Part Number	Description	Qty	Serial Number
	B7406	KIT – CLAAS/LEXION HYD COMPLETION [524]		
1	328548	VALVE – SELECTOR, CLAAS	1	
	287456	VALVE – 3-POS 4-WAY		
	287460	VALVE – NC POPPET		
	287461	COIL – 12VDC - .500 IN.		
	287462	COIL – 12VDC - .625 IN.		
	279228	VALVE – CARTRIDGE, PO CHECK		
	320284	O-RING – 2.38 X 20.64		
	136108	SCREW – HEX SOC HD M10 X 1.5 X 80-12.9-AA1J	3	
	184711	WASHER – FLAT REG M10-200HV-AA1J	3	
2	252693	RESTRICTOR – #6 ORB X .052 IN.	1	
3	136144	FITTING – ELBOW 45° HYD	1	
4	136095	FITTING – ELBOW 90° HYD	2	
	135865	O-RING – Ø1.78 X Ø9.25		
	50219	O-RING – Ø1.98 X Ø11.89		
5	320195	SEAL – BONDED WASHER	2	
6	190866	COUPLER – LEXION MULTI LINK	1	
7	129481	COVER	1	
8	184463	FITTING – ADAPTER HYD	2	
	44210	O-RING – Ø2.46 X Ø19.18		
	135866	O-RING – Ø1.78 X Ø12.42		
9	314821	HOSE – HYD, REEL PRESSURE CLAAS	1	
10	314820	HOSE – HYD, REEL RETURN CLAAS	1	
11	314819	HOSE – HYD, REEL POSITION CLAAS	2	
12	314817	HOSE – HYD, REEL LIFT CLAAS	1	
13	347954	SUPPORT – COUPLER WELDMENT	1	
14	162116	SEAL – EDGE TRIM	1	
15	135786	FITTING – ADAPTER [525]	2	
	50219	O-RING – Ø1.98 X Ø11.89		
	135865	O-RING – Ø1.78 X Ø9.25		
16	135778	FITTING – ADAPTER [525]	1	
	50219	O-RING – Ø1.98 X Ø11.89		
	135865	O-RING – Ø1.78 X Ø9.25		
17	49232	FASTENER – CABLE TIE, WHITE	3	
18	40701	FASTENER – CABLE TIE, YELLOW	3	
19	40704	FASTENER – CABLE TIE, ORANGE	2	
20	40703	FASTENER – CABLE TIE, BLUE	2	
21	21763	FASTENER – CABLE TIE, BLACK	2	
22	30753	FASTENER – CABLE TIE, BLACK [525]	1	

524. Kits are available through Whole Goods only.
525. This part is installed at the factory and is **NOT** included in the hydraulic completion kit (MD #B7406).

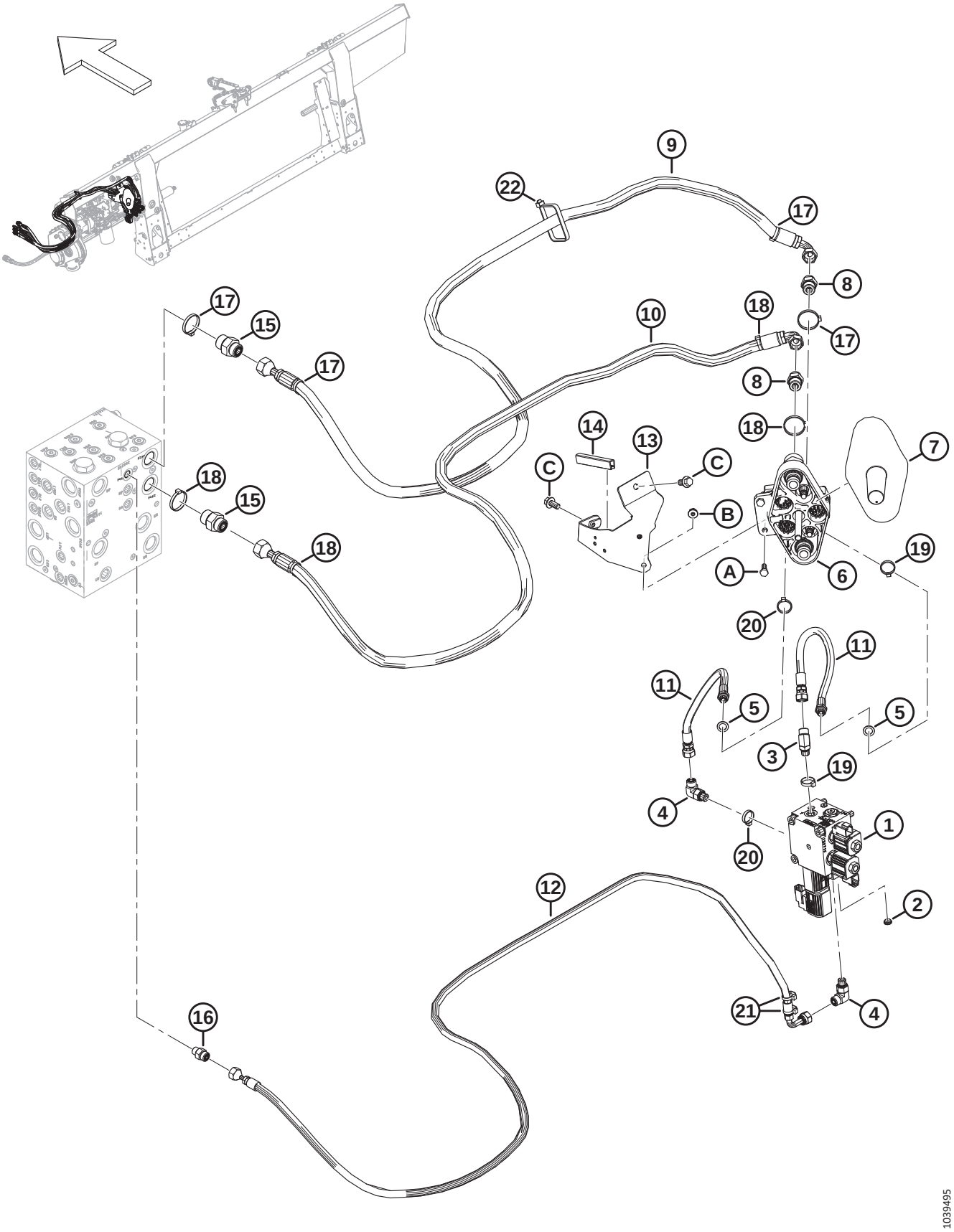
9
22
17
8
17
10
18
17
15
17
8
18
14
13
C
C
7
18
15
B
18
A
6
19
20
11
11
5
5
3
19
4
20
1
12
2
21
4
16
1039495

Ref	Part Number	Description	Qty	Serial Number
A	184652	BOLT – HEX HD TFL M8 X 1.25 X 25-8.8-AA1J		
B	135337	NUT – HEX FLG CTR LK M8 X 1.25-8-AA1J		
C	152655	BOLT – HEX FLG HD M10 X 1.5 X 20-8.8-AA1J		

195 CLAAS – Electrical Completion (2023 and Later)

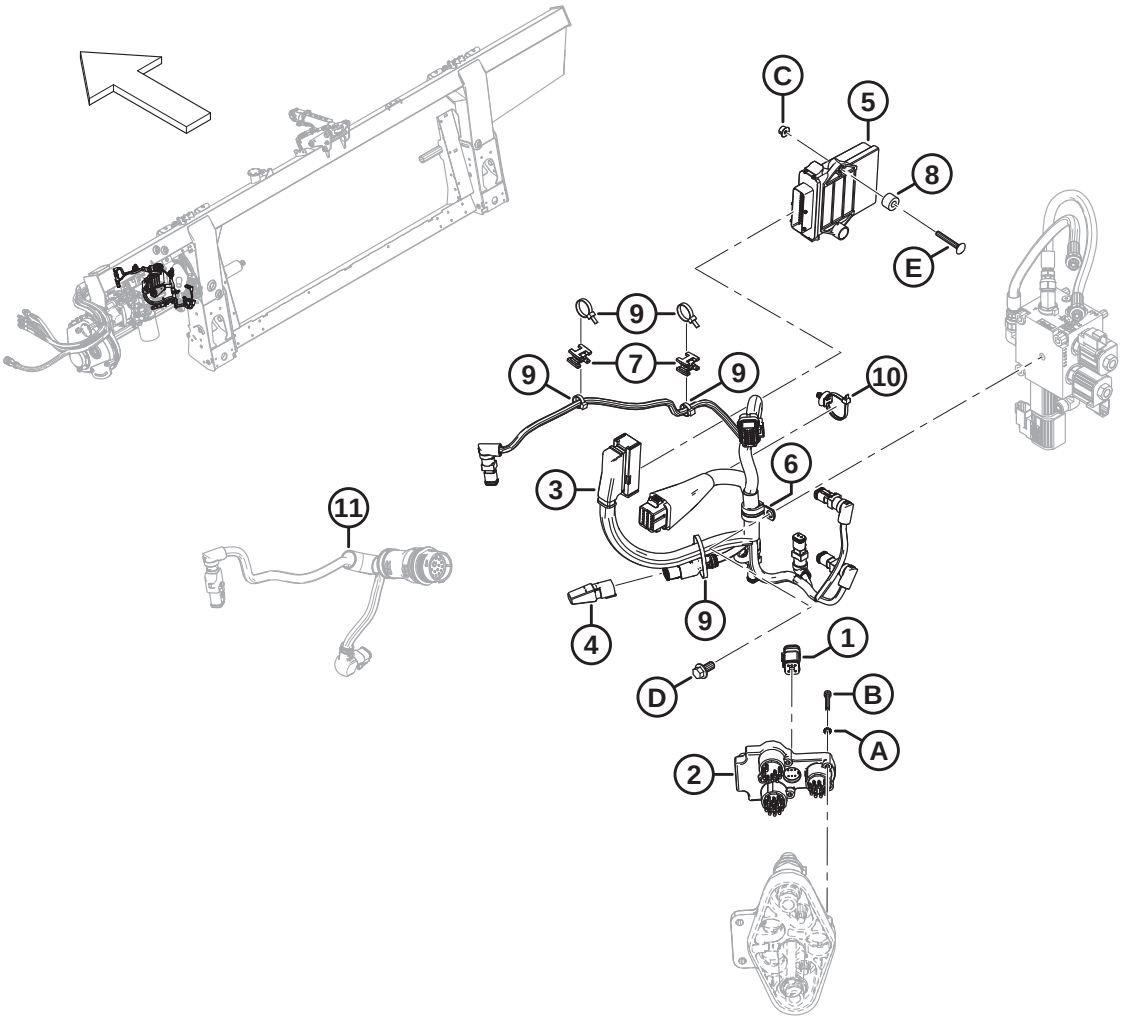

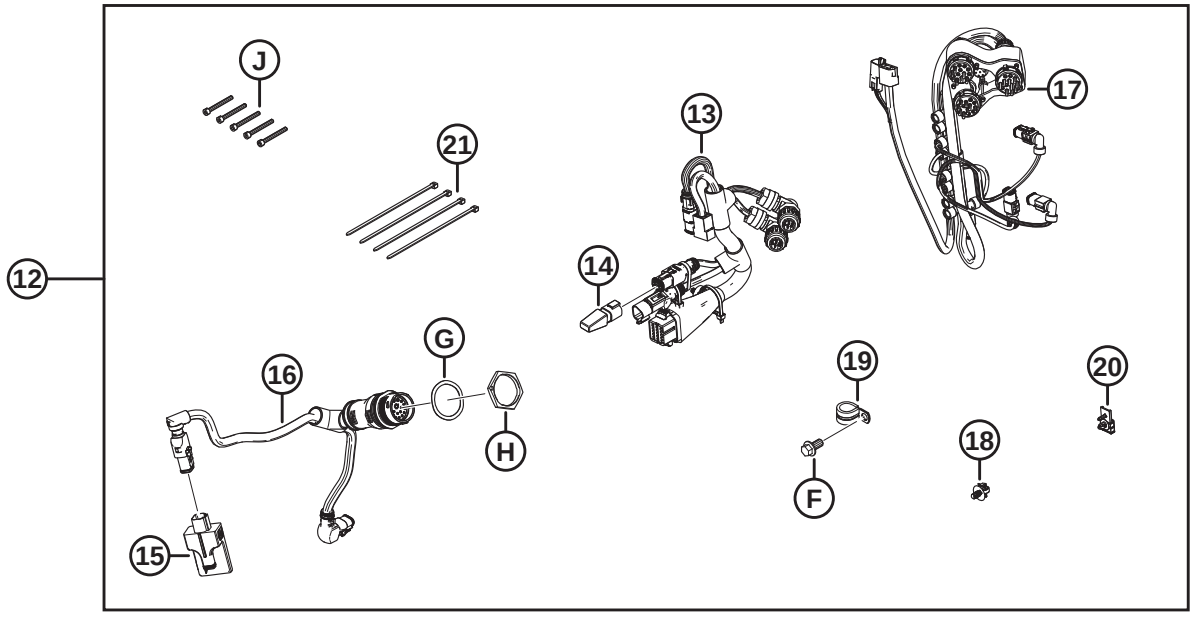

1039492

Ref	Part Number	Description	Qty	Serial Number
1	337352	PLUG – TERMINATOR	1	
2	328440	COUPLER MODULE	1	
3	357119	HARNESS – FM2 COMP, CLAAS INTEGRATION CONTROLLER	1	
4	283215	DIODE PACK – 6A DIODE [526]	1	
5	328065	MODULE – HEADER INTEGRATION	1	
6	135709	CLAMP – INSULATED 3/4 IN.	1	
7	134442	SPACER – DUAL SWIVEL SADDLE	2	
8	328913	SPACER	2	
9	21763	FASTENER – CABLE TIE, BLACK	5	
10	136655	FASTENER – FIR TREE MT W/ TIE	1	
11	REF	HARNESS – CAB ADAPTER [527]	1	
12	B7405	KIT – CLAAS/LEXION ELEC COMPLETION [528]	A/R	
13	335431	HARNESS – COMP., CLAAS	1	
14	283215	DIODE PACK – 6A DIODE [529]	1	
15	328411	MODULE – VALVE DRIVER	1	
16	322383	HARNESS – CAB ADAPTER	1	
17	276630	HARNESS – COUPLER, CLAAS [530]	1	
	213824	HARNESS – LEXION COUPLER MOD [531]		
	129772	HARNESS – WIRING, CLAAS [531]		
18	136655	FASTENER – FIR TREE MT W/ TIE	1	
19	135709	CLAMP – INSULATED 3/4 IN.	1	
20	134612	CLIP – RECEPTACLE MOUNT	1	
21	21763	FASTENER – CABLE TIE, BLACK	4	
A	184703	WASHER – EXT LK TOOTH M5-200HV-AF0C		
B	173117	SCREW – HEX SOC HD M5 X 0.8 X 35-8.8-AA1J		
C	152668	NUT – HEX FLG CTR LOC M6 X 1-8		
D	152655	BOLT – HEX FLG HD M10 X 1.5 X 20-8.8-AA1J		
E	136731	BOLT – RHSN M6 X 1 X 45-8.8-AA1J		
F	152655	BOLT – HEX FLG HD M10 X 1.5 X 20-8.8-AA1J		
G	134730	WASHER – LOCK, HDP 20, SIZE 24		
H	134728	NUT – PANEL, HDP 20, SIZE 24		
J	129965	SCREW – HEX SOC HD M5 X 0.8 X 45		

526. Service part for CLAAS completion harness MD #337119.
527. For the harness, valve driver module, and hardware, refer to Section *179 Electrical – Base, page 435*.
528. Kits are available through Whole Goods only.
529. Service part for CLAAS completion harness MD #335431.
530. Includes harness MD #213824 and harness MD #129772.
531. Service part for CLAAS harness MD #276630.

196 CLAAS – Auger Completion

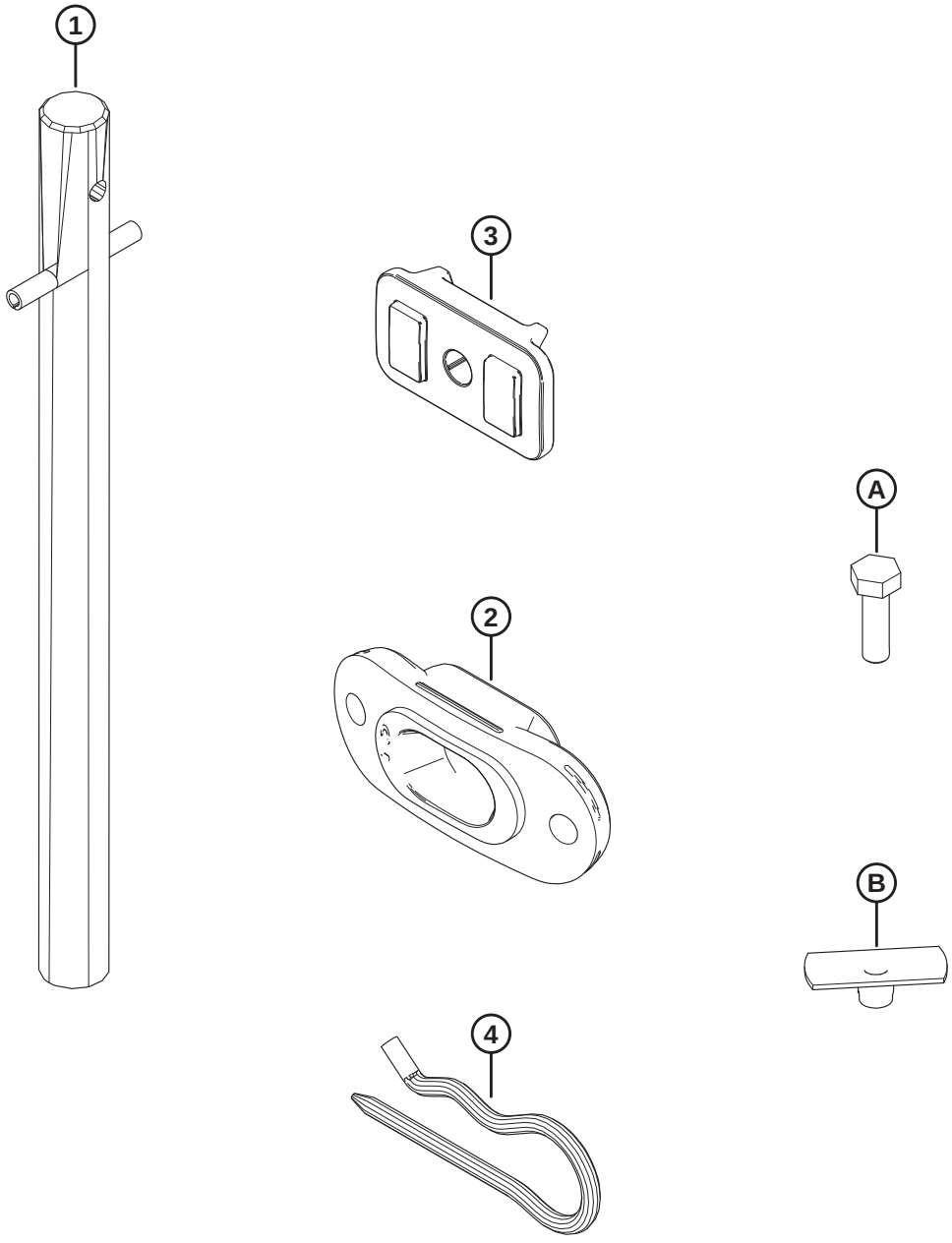

1032782

Ref	Part Number	Description	Qty	Serial Number
1	337152	KIT – FINGER	8	
	7642	PIN – SPRING 3/16 DIA X 1.5 LG	8	
2	337143	GUIDE	8	
3	213084	PLUG – FLIGHTING SLOT	8	
4	123180	PIN – HAIR	8	
A	252703	BOLT – HEX HD TFL M6 X 1 X 20 X SPCL-12.9-AF0C		
B	197263	NUT – TEE M6 X 1		

197 John Deere S Series – Float Module Completion

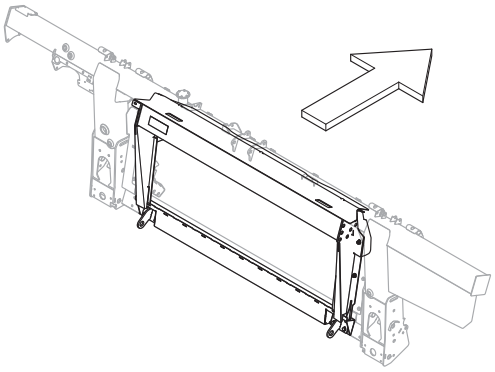

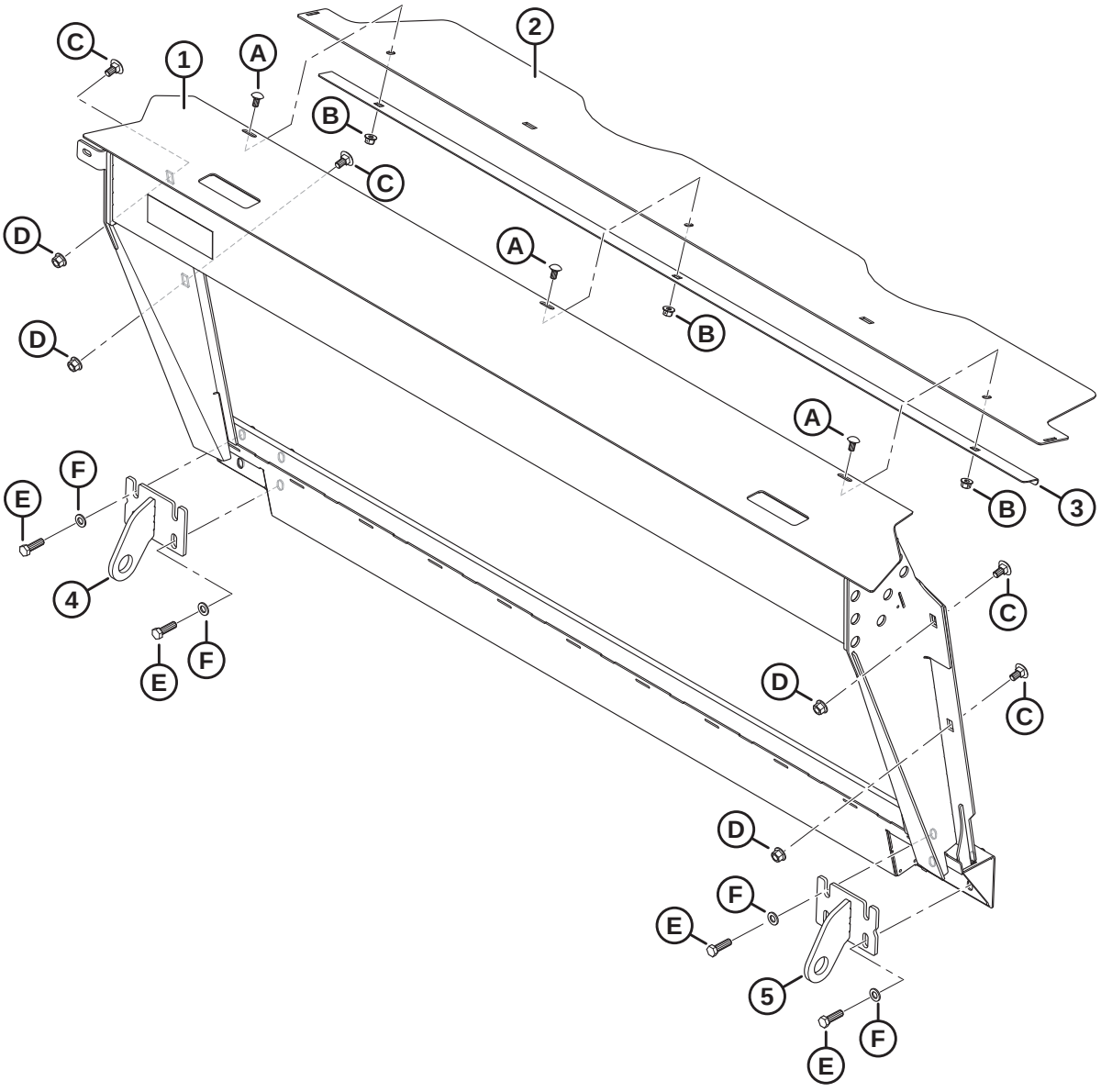

1034919

Ref	Part Number	Description	Qty	Serial Number
	B7044	KIT – JD-S TRANSITION FRAME [532]		
1	347301	TRANS FRAME W/ DECAL – ASSY, JD CM	1	
2	**357195**	**COVER – FEED AUGER TOP**	**1**	
3	301629	RETAINER – DUST COVER	1	
4	347179	ANCHOR – WELDT LH	1	
5	347180	ANCHOR – WELDT RH	1	
A	184657	BOLT – RHSSN M10 X 1.5 X 20-8.8-AA1J		
B	135799	NUT – HEX FLG CTR LOC M10 X 1.5-10		
C	135903	BOLT – RHSN M12 X 1.75 X 25-8.8-ZINC		
D	136431	NUT – HEX FLG CTR LOC M12 X 1.75-10		
E	184669	BOLT – HEX HD M12 X 1.75 X 40-8.8-AA1J		
F	184714	WASHER – FLAT REG M12-300HV		

532. Kits are available through Whole Goods only.

198 John Deere S and T Series – Hydraulic/Electrical Completion

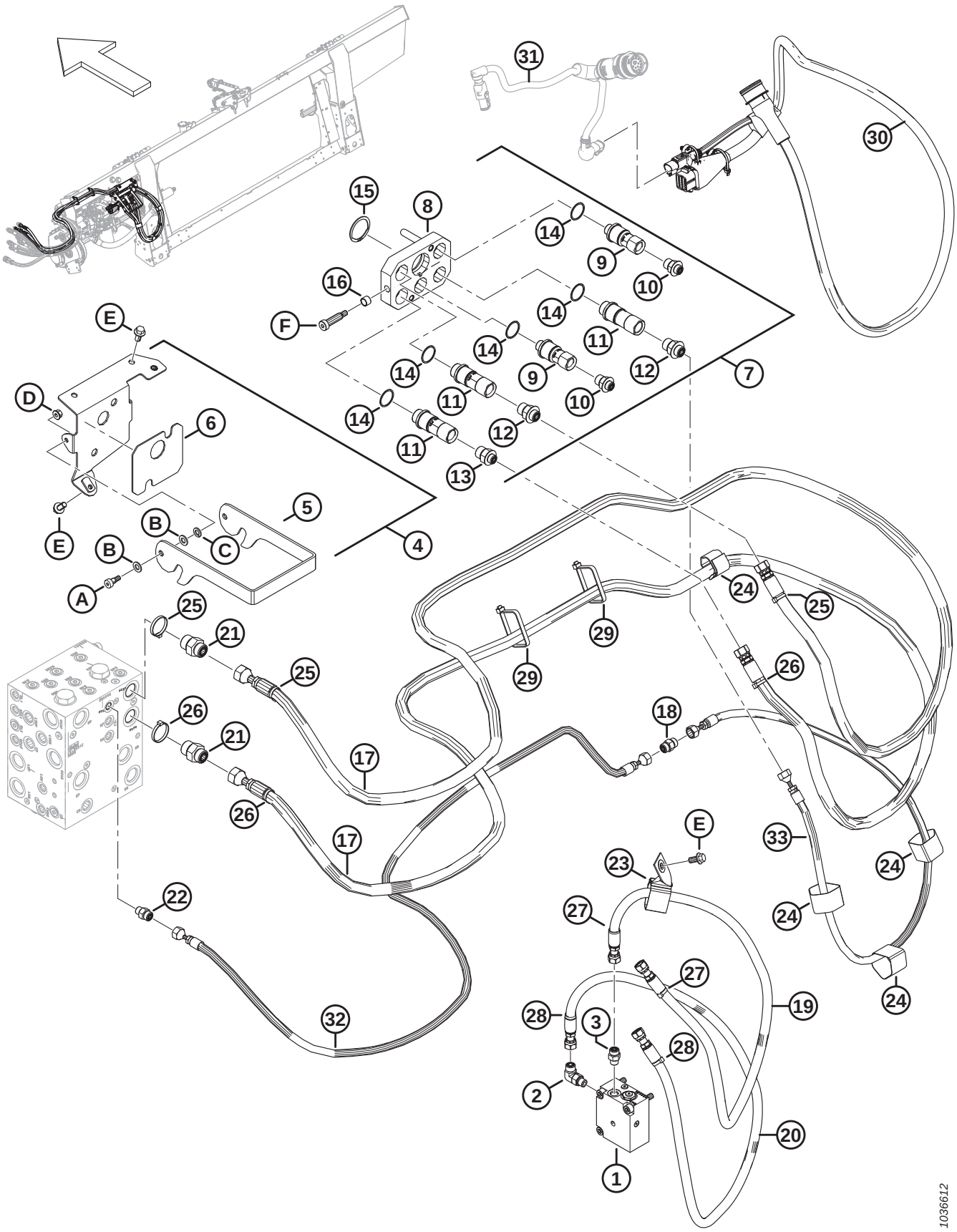

Ref	Part Number	Description	Qty	Serial Number
	B7057	KIT – JD S/T HYD ELEC COMPLETION [533]		
1	335342	VALVE – PO, CHECK	1	
	220959	SEAL KIT		
	279228	VALVE – CARTRIDGE, PO CHECK		
	320284	O-RING – 2.38 X 20.64		
	184711	WASHER – FLAT REG M10-200HV-AA1J		
2	136095	FITTING – ELBOW 90° HYD	1	
	135865	O-RING – Ø1.78 X Ø9.25		
	50219	O-RING – Ø1.98 X Ø11.89		
3	135778	FITTING – ADAPTER	1	
	50219	O-RING – Ø1.98 X Ø11.89		
	135865	O-RING – Ø1.78 X Ø9.25		
4	322216	ASSEMBLY – MULTI COUPLER MOUNT JD	1	
5	248960	LATCH – COUPLER BRACKET	1	
6	129149	PAD – RUBBER	1	
7	328002	COUPLING – MULTI JD 5-POSITION	1	
8	182182	PLATE ASSY – JD MULTICOUPLER	1	
9	191704	COUPLER – 3/8, JD MULTI COUPLER	2	
	129859	SEAL KIT – 3/8 IN MULTI-COUPLER		
10	191705	FITTING – ADAPTER HYD	2	
	44209	O-RING – Ø2.21 X Ø16.36		
	135865	O-RING – Ø1.78 X Ø9.25		
11	184460	COUPLER – 1/2 IN FF MULTI COUPLER	3	
	129860	SEAL KIT – 1/2 IN.60 SERIES MULTI-COUPLER		
12	184463	FITTING – ADAPTER HYD	2	
	44210	O-RING Ø2.46 X Ø19.18		
	135866	O-RING Ø1.78 X Ø12.42		
13	184462	FITTING – ADAPTER HYD	1	
	44210	O-RING Ø2.46 X Ø19.18		
	135865	O-RING – Ø1.78 X Ø9.25		
14	184603	RING – RETAINING, JD COUPLER	5	
15	135267	RING – INVERTED EXT RETAINING	1	
16	182181	BUSHING – JD MULTICOUPLER	2	
17	314706	HOSE – HYD, REEL DRIVE JD	2	
18	136219	FITTING – UNION SAE -6 ORFS	1	
	135865	O-RING – Ø1.78 X Ø9.25		
19	314708	HOSE – HYD, REEL AFT JD	1	
20	314707	HOSE – HYD, REEL FORE JD	1	
21	135786	FITTING – ADAPTER	2	
	50219	O-RING – Ø1.98 X Ø11.89		
	135865	O-RING – Ø1.78 X Ø9.25		

533. Kits are available through Whole Goods only.

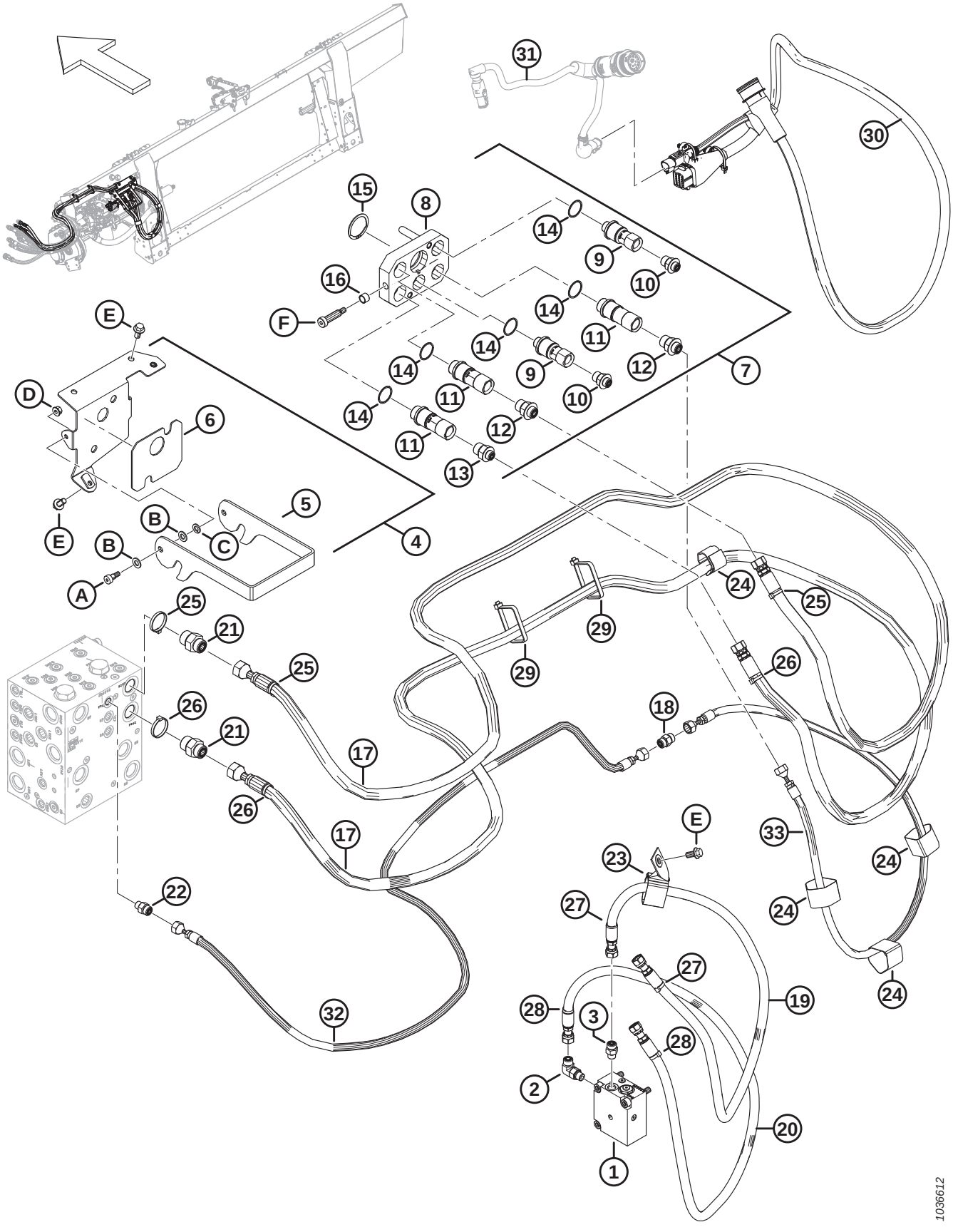
1
2
3
4
5
6
7
8
9
10
11
12
13
14
15
16
17
18
19
20
21
22
23
24
25
26
27
28
29
30
31
32
33
A
B
C
D
E
F
1036612

Ref	Part Number	Description	Qty	Serial Number
22	135778	FITTING – ADAPTER	1	
	50219	O-RING – Ø1.98 X Ø11.89		
	135865	O-RING – Ø1.78 X Ø9.25		
23	163598	CINCH STRAP – HANGING, 6 IN LG	1	
24	135444	CINCH STRAP – 6 IN LG	4	
25	49232	FASTENER – CABLE TIE, WHITE	3	
26	40701	FASTENER – CABLE TIE, YELLOW	3	
27	40702	FASTENER – CABLE TIE, RED	3	
28	49227	FASTENER – CABLE TIE, GREEN	3	
29	30753	FASTENER – CABLE TIE, BLACK	2	
30	322387	HARNESS – COMP., JD	1	
31	REF	HARNESS – CAB ADAPTER [534]	1	
32	337652	HOSE – HYD, REEL LIFT [535]	1	
33	337651	HOSE – HYD, REEL LIFT [536]	1	
A	135894	SCREW – HEX SOC HD SHLDR M10		
B	184711	WASHER – FLAT REG M10-200HV-AA1J		
C	30632	WASHER – LOCK SPRING M10		
D	135337	NUT – HEX FLG CTR LK M8 X 1.25-8-AA1J		
E	152655	BOLT – HEX FLG HD M10 X 1.5 X 20-8.8-AA1J		
F	184524	SCREW – HEX SOC HD SHLDR 1/2-3/8		

534. For the harness, refer to Section *179 Electrical – Base, page 435*.
535. Connects to the hydraulic block.
536. Connects to the quick coupler.

199 John Deere T Series – Float Module Completion

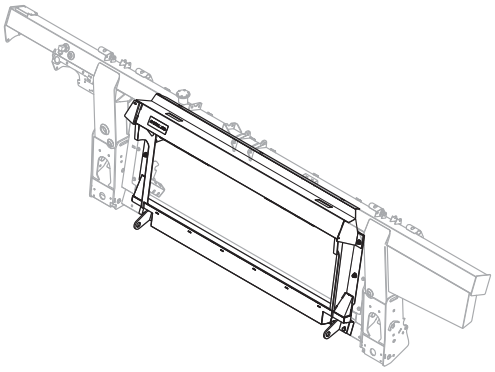

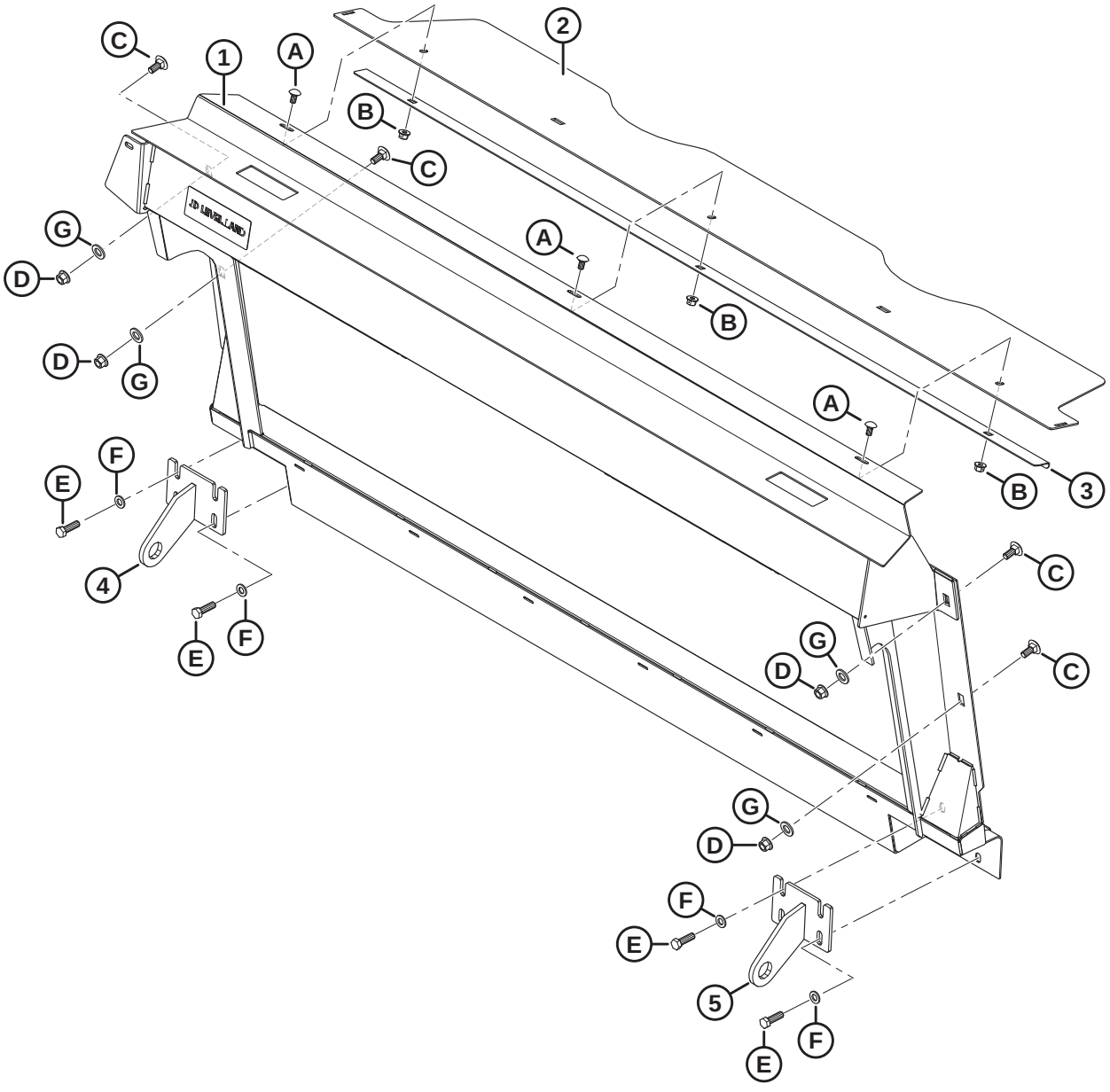

Ref	Part Number	Description	Qty	Serial Number
	B7341	KIT – JD-LEVEL LAND TRANSITION FRAME [537]		
1	351371	ASSEMBLY – JD LL TRANS FRAME W/DECAL	1	
2	**357195**	**COVER – FEED AUGER TOP**	**1**	
3	301629	RETAINER – DUST COVER	1	
4	151941	ANCHOR – WELDT LH	1	
5	151942	ANCHOR – WELDT RH	1	
A	184657	BOLT – RHSSN M10 X 1.5 X 20-8.8-AA1J		
B	135799	NUT – HEX FLG CTR LOC M10 X 1.5-10		
C	184667	BOLT – RHSN M12 X 1.75 X 30-8.8-ZINC		
D	136431	NUT – HEX FLG CTR LOC M12 X 1.75-10		
E	152730	BOLT – HEX HD TFL M12 X 1.75 X 35-10.9-AA1J		
F	184714	WASHER – FLAT REG M12-300HV		
G	184717	WASHER – FLAT REG M16-200HV-AA1J		

537. Kits are available through Whole Goods only.

200 John Deere X9 Series – Float Module Completion

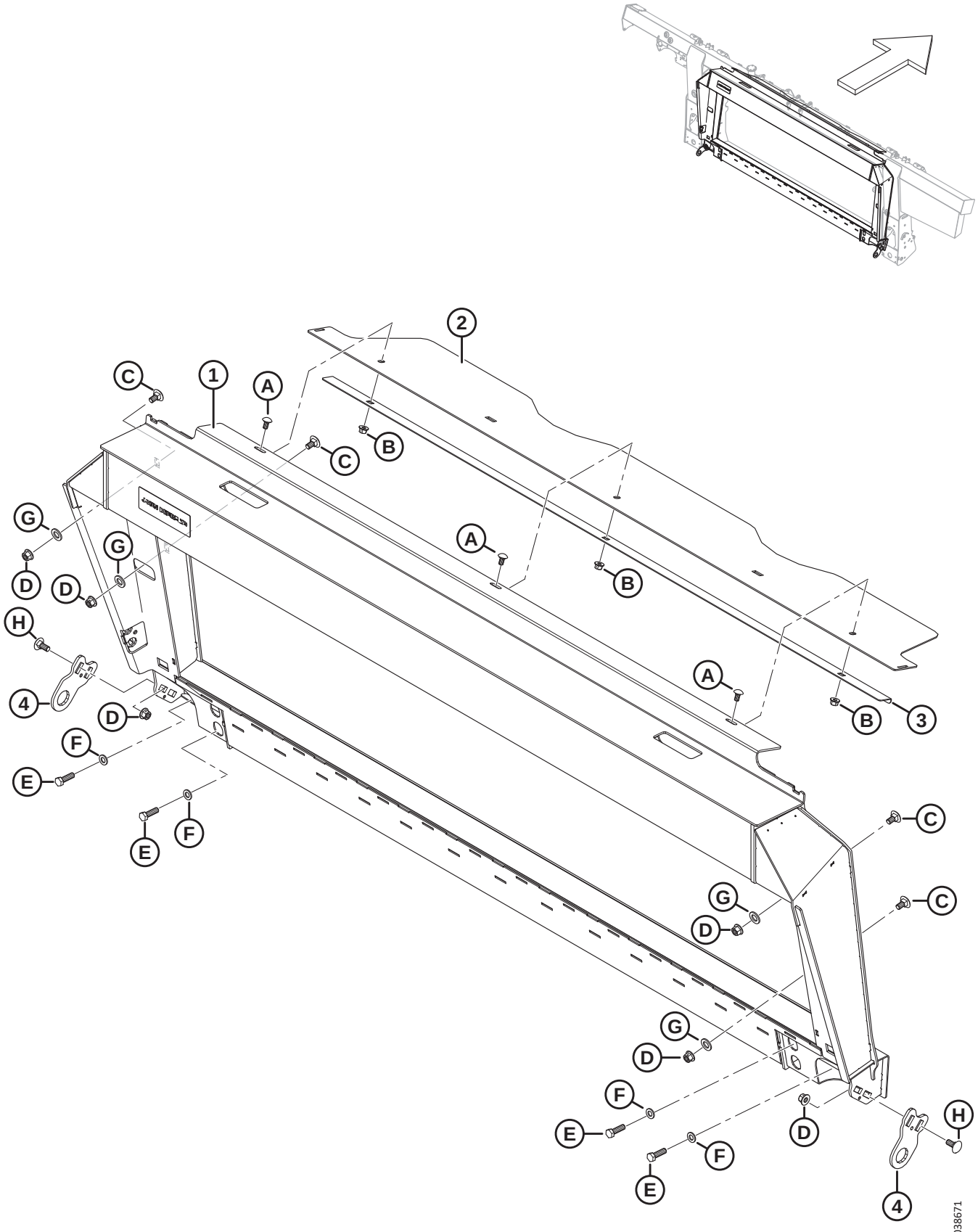

Ref	Part Number	Description	Qty	Serial Number
	B7287	KIT – JD-X9 TRANSITION FRAME [538]		
1	347376	TRANSITION FRAME W/ DECAL – JD X9	1	
2	**357195**	**COVER – FEED AUGER TOP**	**1**	
3	301629	RETAINER – DUST COVER	1	
4	357089	PLATE – ANCHOR	2	
A	184657	BOLT – RHSSN M10 X 1.5 X 20-8.8-AA1J		
B	135799	NUT – HEX FLG CTR LOC M10 X 1.5-10		
C	135903	BOLT – RHSN M12 X 1.75 X 25-8.8-ZINC		
D	136431	NUT – HEX FLG CTR LOC M12 X 1.75-10		
E	184669	BOLT – HEX HD M12 X 1.75 X 40-8.8-AA1J		
F	184714	WASHER – FLAT REG M12-300HV		
G	184717	WASHER – FLAT REG M16-200HV-AA1J		
H	184667	BOLT – RHSN M12 X 1.75 X 30-8.8-ZINC		

538. Kits are available through Whole Goods only.

201 John Deere X9 Series – Hydraulic Completion

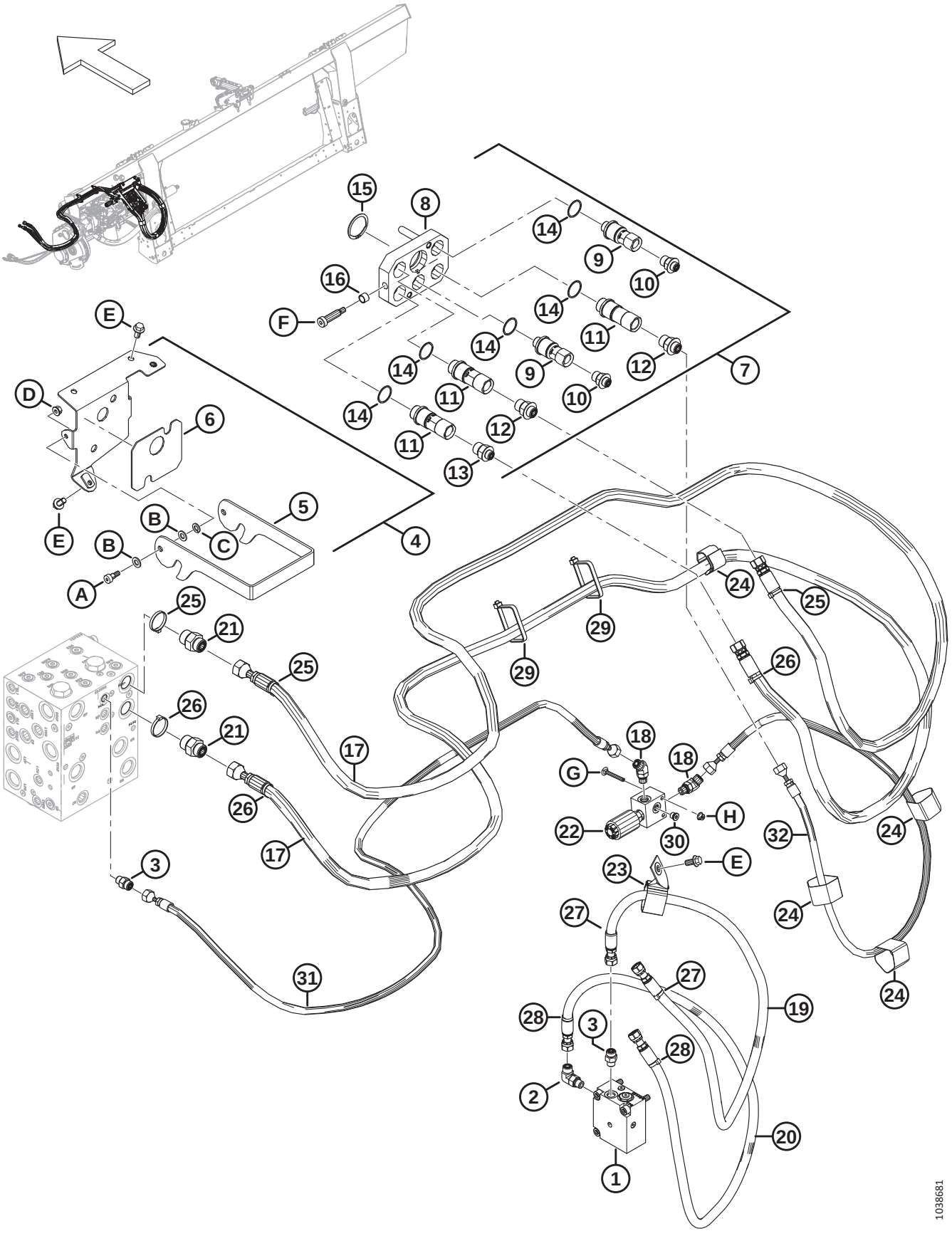

Ref	Part Number	Description	Qty	Serial Number
	B7323	KIT – JD X9 HYD ELEC COMPLETION [539]		
1	335342	VALVE – PO, CHECK	1	
	220959	SEAL KIT		
	279228	VALVE – CARTRIDGE, PO CHECK		
	320284	O-RING – 2.38 X 20.64		
	320392	SCREW – HEX SOC HD M10 X 1.5 X 55-8.8-ZINC		
	184711	WASHER – FLAT REG M10-200HV-AA1J		
2	136095	FITTING – ELBOW 90° HYD	1	
	135865	O-RING – Ø1.78 X Ø9.25		
	50219	O-RING – Ø1.98 X Ø11.89		
3	135778	FITTING – ADAPTER	2	
	50219	O-RING – Ø1.98 X Ø11.89		
	135865	O-RING – Ø1.78 X Ø9.25		
4	322216	ASSEMBLY – MULTI COUPLER MOUNT JD	1	
5	248960	LATCH – COUPLER BRACKET	1	
6	129149	PAD – RUBBER	1	
7	328002	COUPLING – MULTI JD 5-POSITION	1	
8	182182	PLATE ASSY – JD MULTICOUPLER	1	
9	191704	COUPLER – 3/8, JD MULTI COUPLER	2	
	129859	SEAL KIT – 3/8 IN MULTI-COUPLER		
10	191705	FITTING – ADAPTER HYD	2	
	44209	O-RING – Ø2.21 X Ø16.36		
	135865	O-RING – Ø1.78 X Ø9.25		
11	184460	COUPLER – 1/2 IN FF MULTI COUPLER	3	
	129860	SEAL KIT – 1/2 IN.60 SERIES MULTI-COUPLER		
12	184463	FITTING – ADAPTER HYD	2	
	44210	O-RING Ø2.46 X Ø19.18		
	135866	O-RING Ø1.78 X Ø12.42		
13	184462	FITTING – ADAPTER HYD	1	
	44210	O-RING Ø2.46 X Ø19.18		
	135865	O-RING – Ø1.78 X Ø9.25		
14	184603	RING – RETAINING, JD COUPLER	5	
15	135267	RING – INVERTED EXT RETAINING	1	
16	182181	BUSHING – JD MULTICOUPLER	2	
17	314706	HOSE – HYD, REEL DRIVE JD	2	
18	136144	FITTING – ELBOW 45° HYD	2	
	50219	O-RING – Ø1.98 X Ø11.89		
	135865	O-RING – Ø1.78 X Ø9.25		
19	314708	HOSE – HYD, REEL AFT JD	1	
20	314707	HOSE – HYD, REEL FORE JD	1	

539. Includes all parts listed in this section and Section *202 John Deere X9 Series – Electrical Completion, page 495*. Kits are available through Whole Goods only.

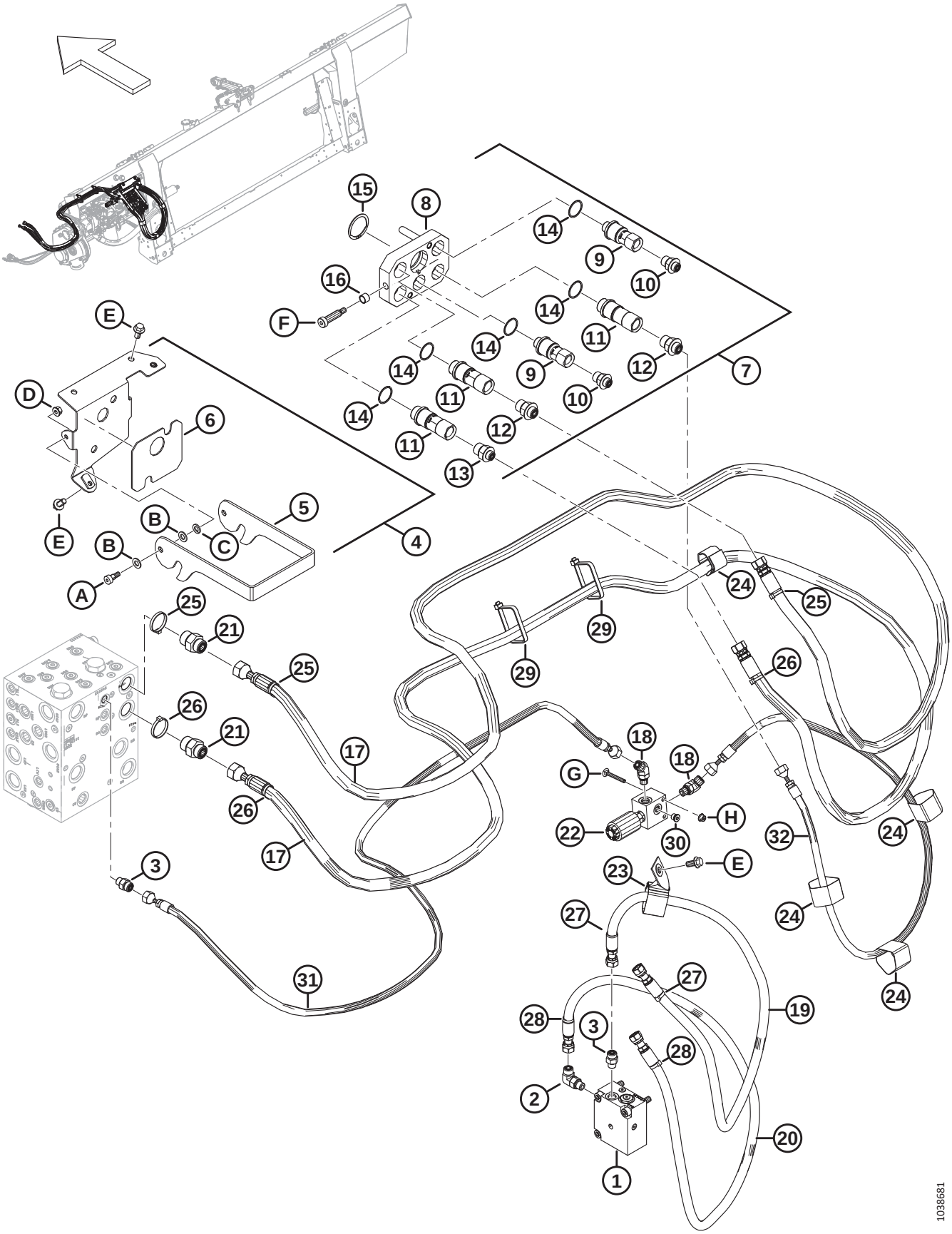
1038681

Ref	Part Number	Description	Qty	Serial Number
21	135786	FITTING – ADAPTER	2	
	50219	O-RING – Ø1.98 X Ø11.89		
	135865	O-RING – Ø1.78 X Ø9.25		
22	337551	MANIFOLD – BLOCKING VALVE	1	
23	163598	CINCH STRAP – HANGING, 6 IN LG	1	
24	135444	CINCH STRAP – 6 IN LG	4	
25	49232	FASTENER – CABLE TIE, WHITE	3	
26	40701	FASTENER – CABLE TIE, YELLOW	3	
27	40702	FASTENER – CABLE TIE, RED	3	
28	49227	FASTENER – CABLE TIE, GREEN	3	
29	30753	FASTENER – CABLE TIE, BLACK	2	
30	102711	FITTING – PLUG HYD 4 ORB HEX SOC	1	
31	337652	HOSE – HYD, REEL LIFT [540]	1	
32	337651	HOSE – HYD, REEL LIFT [541]	1	
A	135894	SCREW – HEX SOC HD SHLDR M10		
B	184711	WASHER – FLAT REG M10-200HV-AA1J		
C	30632	WASHER – LOCK SPRING M10		
D	135337	NUT – HEX FLG CTR LK M8 X 1.25-8-AA1J		
E	152655	BOLT – HEX FLG HD M10 X 1.5 X 20-8.8-AA1J		
F	184524	SCREW – HEX SOC HD SHLDR 1/2-3/8		
G	184644	BOLT – RHSN M6 X 1 X 50-8.8-ZINC		
H	152668	NUT – HEX FLG CTR LOC M6 X 1-8		

540. Connects to the hydraulic block.
541. Connects to the quick coupler.

202 John Deere X9 Series – Electrical Completion

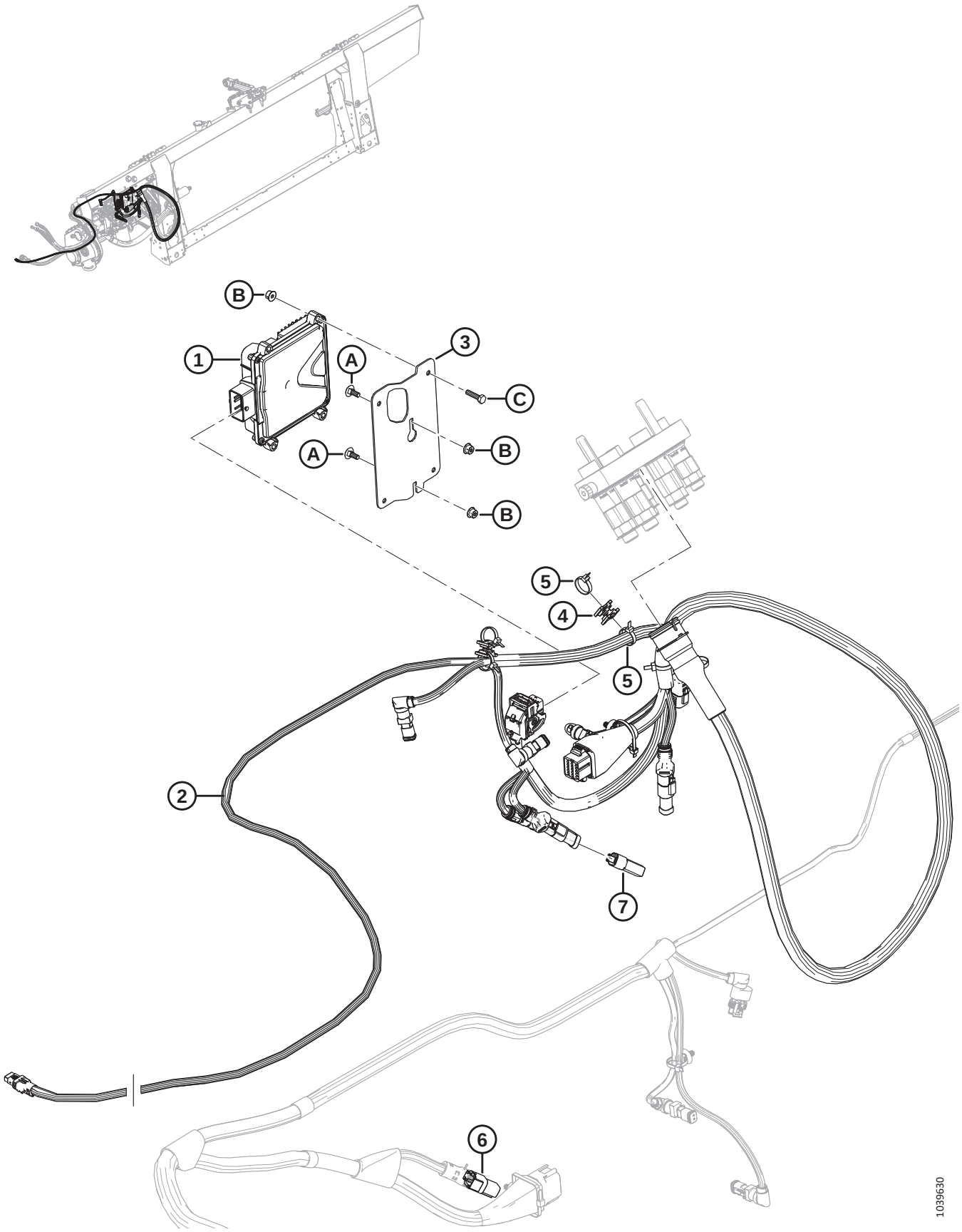

Ref	Part Number	Description	Qty	Serial Number
	B7323	KIT – JD X9 HYD ELEC COMPLETION [542]		
1	500518	MODULE – ASSY-STW ESX-3CS WITH X9SW	1	
2	347560	HARNESS – COMPLETION, JD X9	1	
3	347502	BRACKET – MODULE	1	
4	134442	SPACER – DUAL SWIVEL SADDLE	3	
5	21763	FASTENER – CABLE TIE, BLACK	6	
6	323698	PLUG – FLOAT X9	1	
7	**357046**	**PLUG – ID, 25**	**1**	
	357047	**PLUG – ID, 30**	**1**	
	357050	**PLUG – ID, 35**	**1**	
	357051	**PLUG – ID, 40**	**1**	
	357052	**PLUG – ID, 41**	**1**	
	357053	**PLUG – ID, 45**	**1**	
	357054	**PLUG – ID, 50**	**1**	
A	136748	BOLT – RHSN M6 X 1 X 16-8.8-ZINC		
B	152668	NUT – HEX FLG CTR LOC M6 X 1-8		
C	135301	BOLT – HEX HD M6 X 1 X 25-8.8-AA1J		

542. Includes all parts listed in this section and Section *201 John Deere X9 Series – Hydraulic Completion, page 491*. Kits are available through Whole Goods only.

203 New Holland CR Wide – Float Module Completion

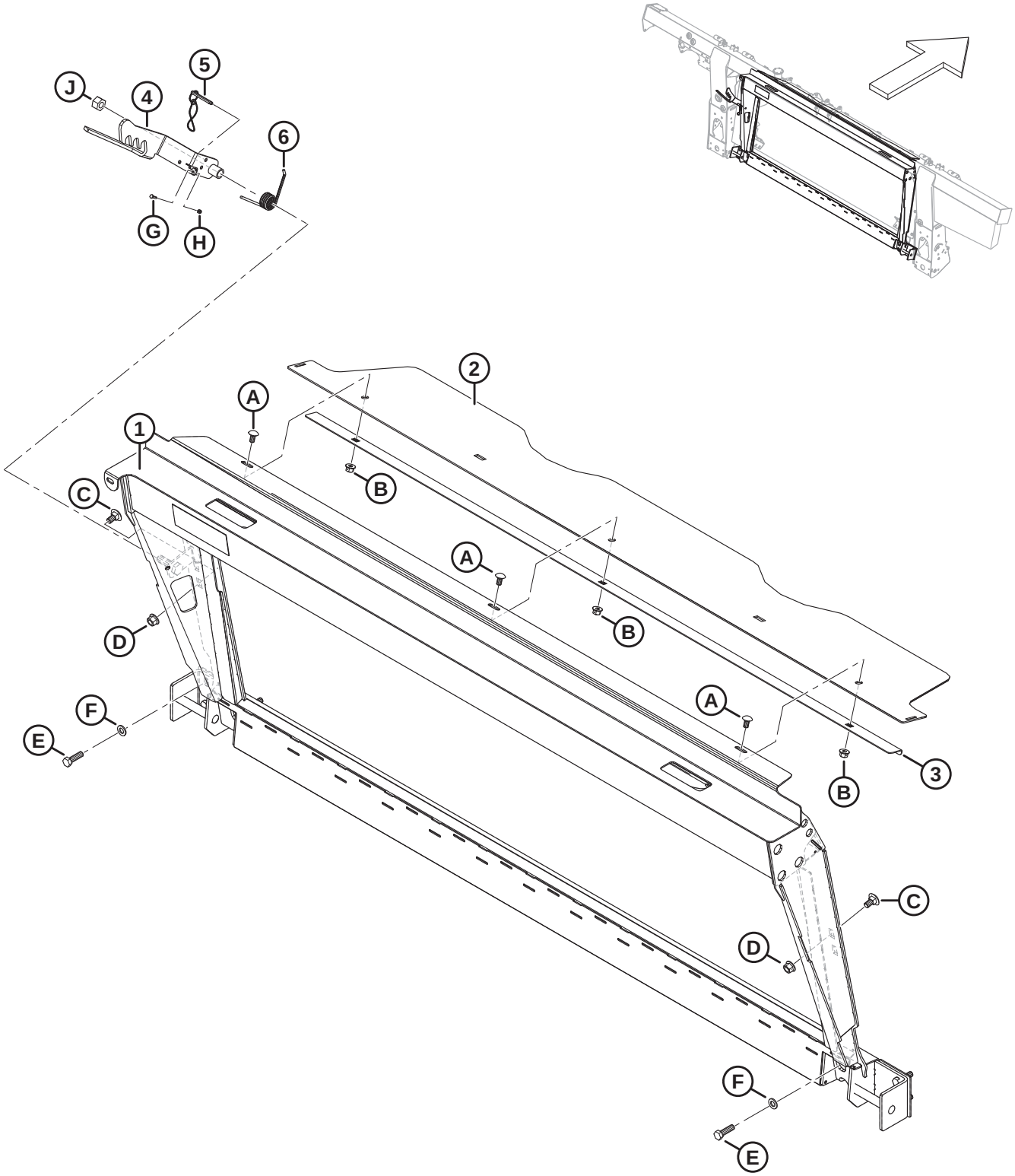

1034928

Ref	Part Number	Description	Qty	Serial Number
	B7043	KIT – CNH TRANSITION FRAME [543]		
1	347300	ASSY – CNH TRANSITION W/ DECAL	1	
2	**357195**	**COVER – FEED AUGER TOP**	**1**	
3	301629	RETAINER – DUST COVER	1	
4	347141	LATCH – WELDT	1	
5	237363	PIN – DETENT WITH 8 IN. LANYARD	1	
6	156948	SPRING – TORSION	1	
A	184657	BOLT – RHSSN M10 X 1.5 X 20-8.8-AA1J		
B	135799	NUT – HEX FLG CTR LOC M10 X 1.5-10		
C	135903	BOLT – RHSN M12 X 1.75 X 25-8.8-ZINC		
D	136431	NUT – HEX FLG CTR LOC M12 X 1.75-10		
E	184669	BOLT – HEX HD M12 X 1.75 X 40-8.8-AA1J		
F	184714	WASHER – FLAT REG M12-300HV		
G	197319	BOLT – HEX HD TFL M4 X 0.7 X 16-8.8-AA1J		
H	197320	NUT – HEX NYLOC M4 X 0.7-8-AA1J		
J	136476	NUT – HEX CTR LOC M16 X 2-8		

543. Kits are available through Whole Goods only.

204 New Holland CR Wide – Hydraulic/Electrical Completion

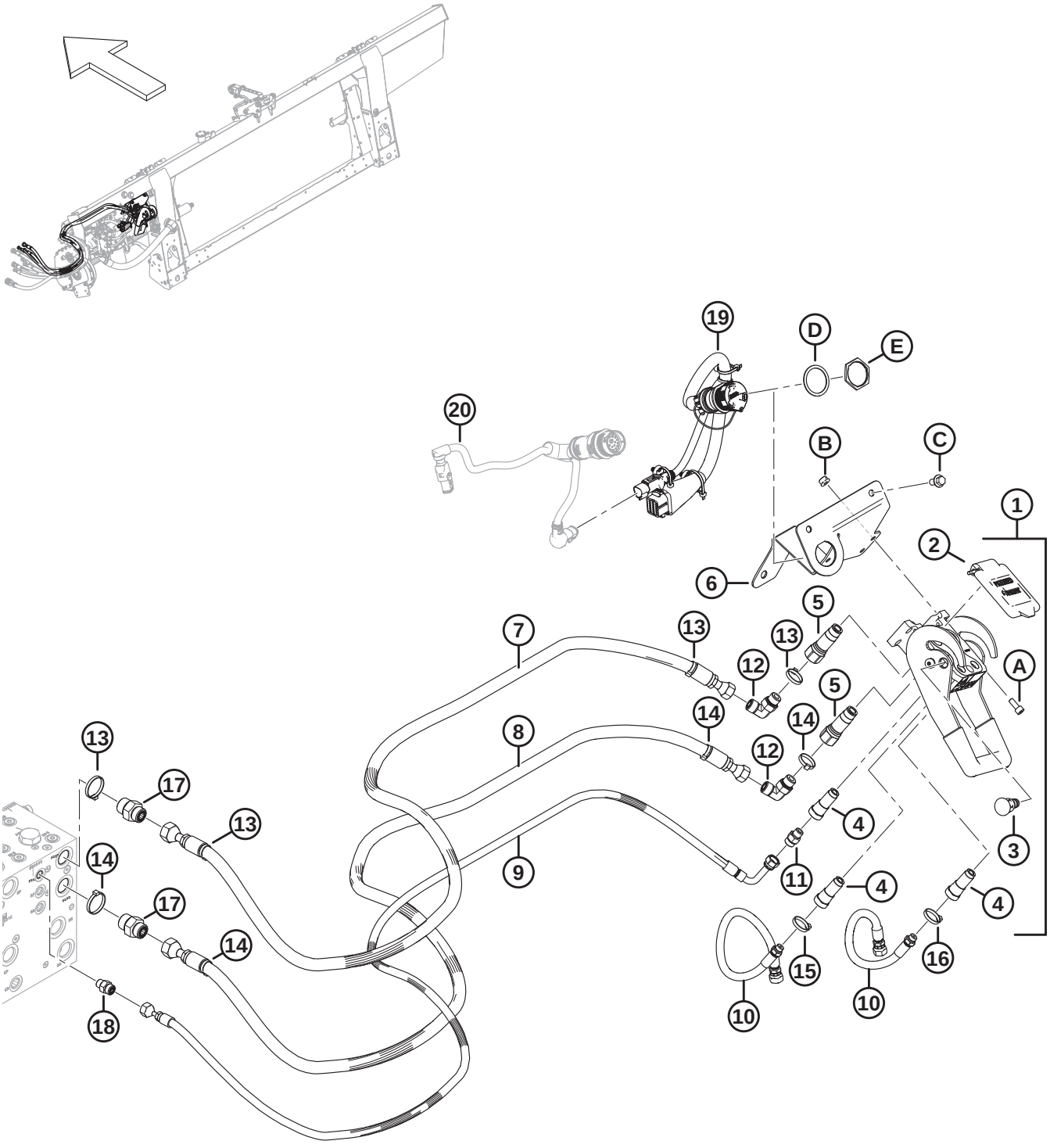

Ref	Part Number	Description	Qty	Serial Number
	B7056	KIT – CNH HYD ELEC COMPLETION [544]		
1	153151	COUPLING – MULTI [545]	1	
2	129800	KIT – COVER CNH MULTI-COUPLER	1	
3	129801	KIT – LATCH BUTTON	1	
4	129976	COUPLING 1/4 IN.	3	
5	129977	COUPLING 3/8 IN.	2	
6	328874	SUPPORT WELDT – CNH MULTI COUPLER	1	
7	314586	HOSE – HYD, REEL DRIVE PRESSURE CNH	1	
8	314587	HOSE – HYD, REEL DRIVE RETURN CNH	1	
9	314588	HOSE – HYD, REEL LIFT, CNH	1	
10	314585	HOSE – HYD, REEL F-A, CNH	2	
11	252694	FITTING – ADAPTER .052 ORIFICE	1	
12	136220	FITTING – ELBOW 90° HYD	2	
	44209	O-RING – Ø2.21 X Ø16.36		
	135866	O-RING – Ø1.78 X Ø12.42		
13	49232	FASTENER – CABLE TIE, WHITE	4	
14	40701	FASTENER – CABLE TIE, YELLOW	4	
15	40702	FASTENER – CABLE TIE, RED	2	
16	49227	FASTENER – CABLE TIE, GREEN	2	
17	135786	FITTING – ADAPTER	2	
	50219	O-RING – Ø1.98 X Ø11.89		
	135865	O-RING – Ø1.78 X Ø9.25		
18	135778	FITTING – ADAPTER	1	
	50219	O-RING – Ø1.98 X Ø11.89		
	135865	O-RING – Ø1.78 X Ø9.25		
19	322384	HARNESS – COMP., CNH	1	
20	REF	HARNESS – CAB ADAPTER [546]	1	
A	167307	SCREW – HEX SOC HD M8 X 1.25 X 20-8.8-AA1J		
B	135337	NUT – HEX FLG CTR LK M8 X 1.25-8-AA1J		
C	136151	BOLT – HEX FLG HD TFL M10 X 1.5 X 16-8.8-AA1J		
D	134011	WASHER – LOCK SPRING, DEUTSCH HD, SIZE 24	1	
E	134010	NUT – PANEL, HD 30, SIZE 24	1	

544. Kits are available through Whole Goods only.
545. The multicoupler includes CNH multi-coupler cover kit (MD #MD #129800), latch button kit (MD #129801), three 1/4 inch couplings (MD #129976), and two 3/8 inch coupling (MD #129977).
546. For the harness, refer to Section *179 Electrical – Base, page 435*.

205 New Holland CR Wide – Auger Completion

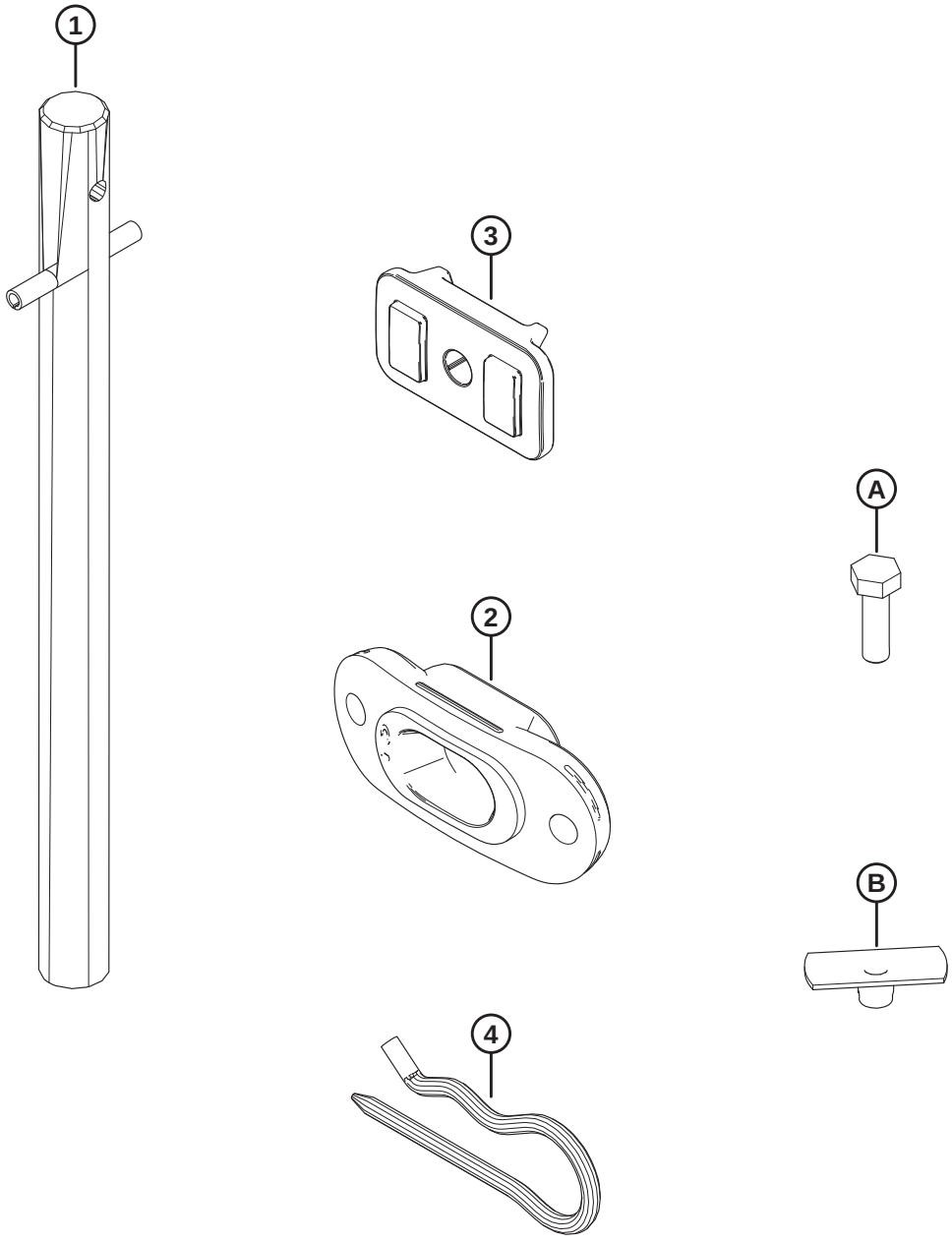

1032789

Ref	Part Number	Description	Qty	Serial Number
1	337152	KIT – FINGER	8	
	7642	PIN – SPRING 3/16 DIA X 1.5 LG	8	
2	337143	GUIDE	8	
3	213084	PLUG – FLIGHTING SLOT	8	
4	123180	PIN – HAIR	8	
A	252703	BOLT – HEX HD TFL M6 X 1 X 20 X SPCL-12.9-AF0C		
B	197263	NUT – TEE M6 X 1		

206 New Holland CR Wide – Flighting Completion

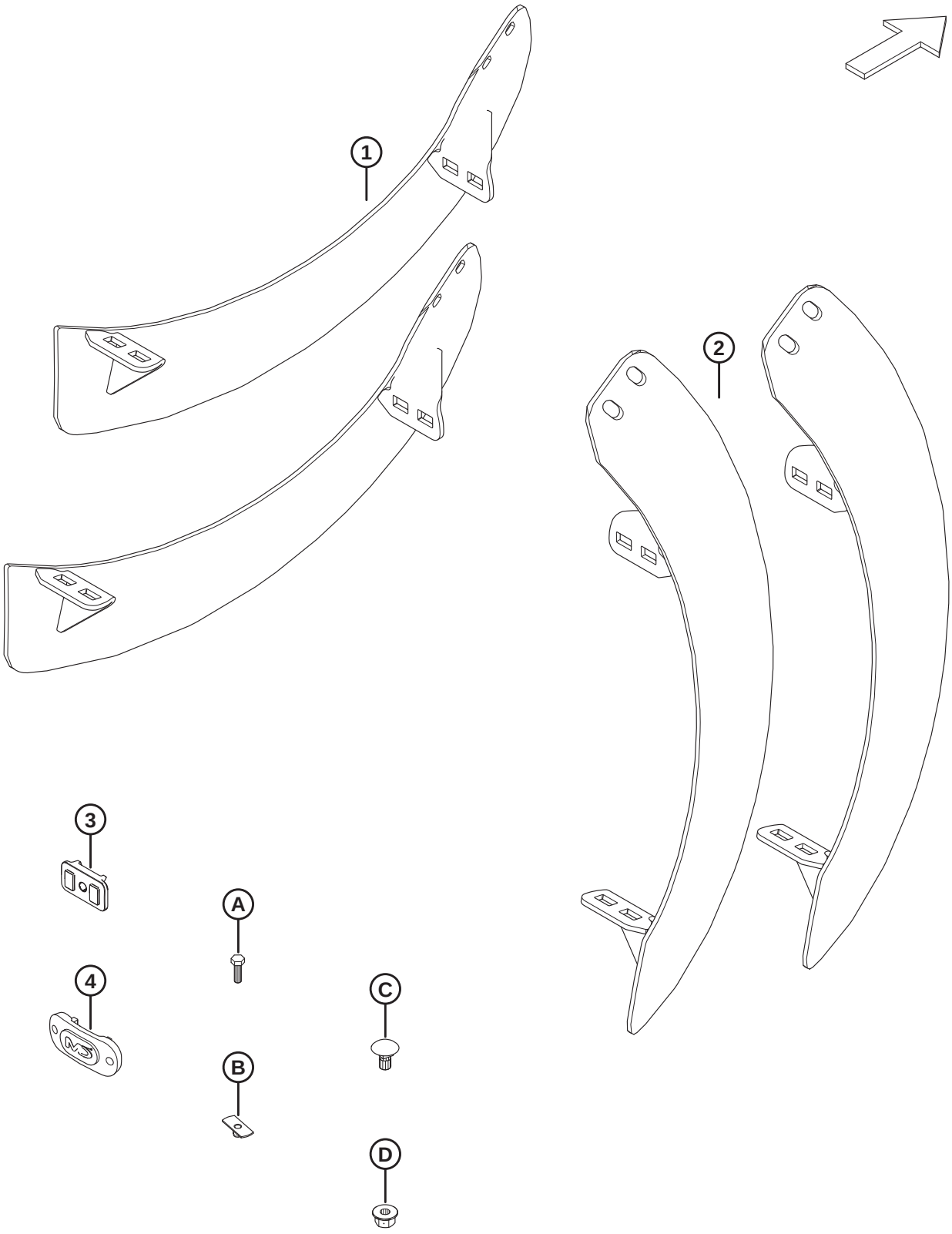

Ref	Part Number	Description	Qty	Serial Number
1	287889	FLIGHTING – LH HIWEAR	2	
2	287890	FLIGHTING – RH HIWEAR	2	
3	213084	PLUG – FLIGHTING SLOT	2	
4	187137	PLUG	4	
A	252703	BOLT – HEX HD TFL M6 X 1 X 20 X SPCL-12.9-AF0C		
B	197263	NUT – TEE M6 X 1		
C	136178	BOLT – RHSN M10 X 1.5 X 20-8.8-AA1J		
D	135799	NUT – HEX FLG CTR LOC M10 X 1.5-10		

207 New Holland CR Wide – Deflector Completion

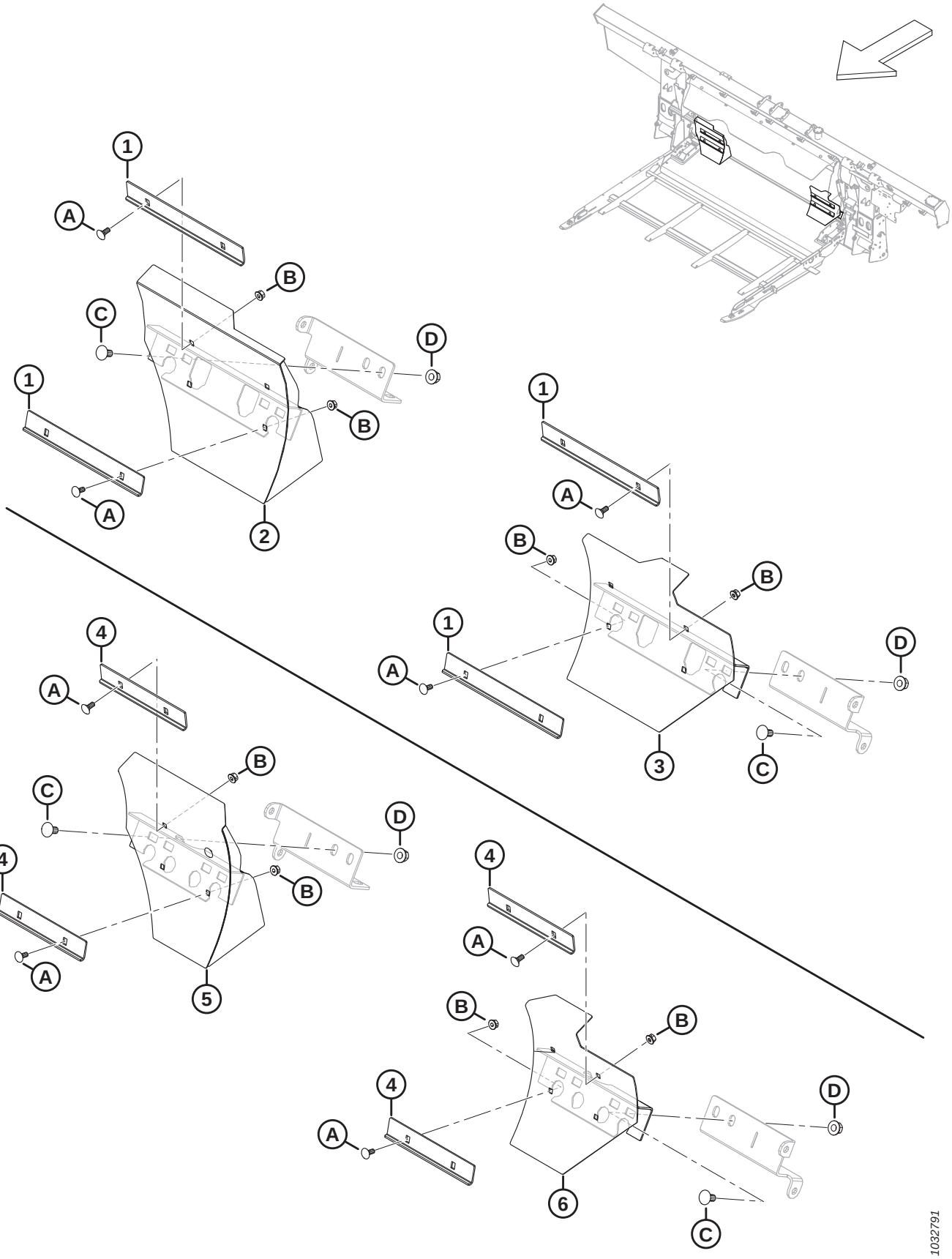

Ref	Part Number	Description	Qty	Serial Number
	B7046	KIT – NH CR FILLERS [547]		
1	328085	ANGLE – LONG STRIPPER	4	
2	337779	DEFLECTOR – LONG RH WELDT	1	
3	337780	DEFLECTOR – LONG LH WELDT	1	
4	314680	ANGLE – SHORT STRIPPER	4	
5	337777	DEFLECTOR – SHORT RH WELDT	1	
6	337778	DEFLECTOR – SHORT LH WELDT	1	
A	197171	BOLT – RHSN M8 X 1.25 X 20-8.8-ZINC		
B	135337	NUT – HEX FLG CTR LK M8 X 1.25-8-AA1J		
C	152439	BOLT – RHSSN M12 X 1.75 X 25-8.8-AA1J		
D	136431	NUT – HEX FLG CTR LOC M12 X 1.75-10		

547. Kits are available through Whole Goods only.

208 New Holland 10 Volt Auto Header Height Control Adapter Kit

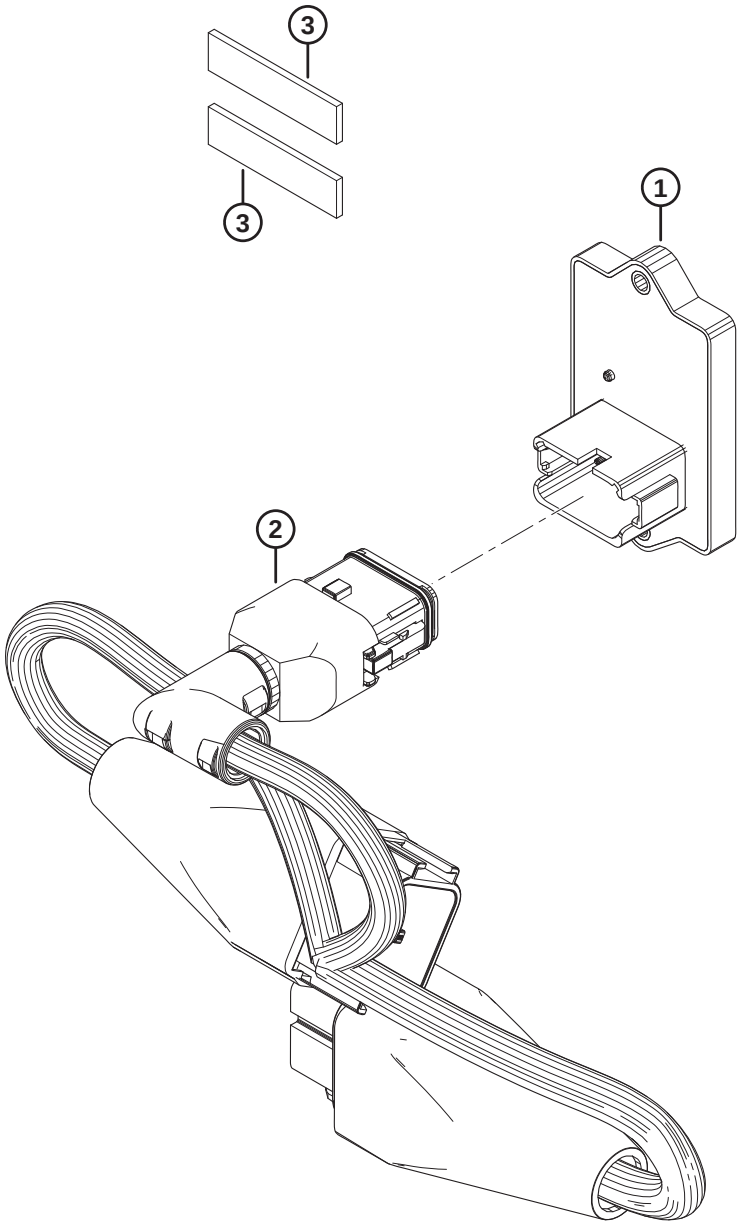

1039669

NEW HOLLAND 10 VOLT AUTO HEADER HEIGHT CONTROL ADAPTER KIT

Ref	Part Number	Description	Qty	Serial Number
	B7241	**KIT – NH 10V ADAPTER** [548]		
	335161	**KIT – NH 10V ADAPTER** [549]		
1	**500448**	**MODULE – NH 10V**	**1**	
2	**335160**	**HARNESS – NH 10V ADAPTER**	**1**	
3	**NSS**	**TAPE – FOAM, VHB, 1/2 IN. WIDE, 50 MM**	**2**	

548. Kits are available through Whole Goods only.
549. The kit includes all listed parts and instructions.

209 Rostselmash – Float Module Completion

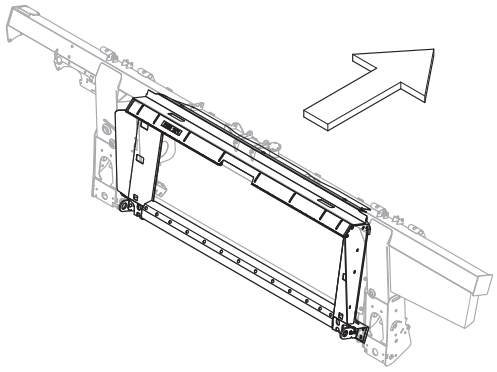

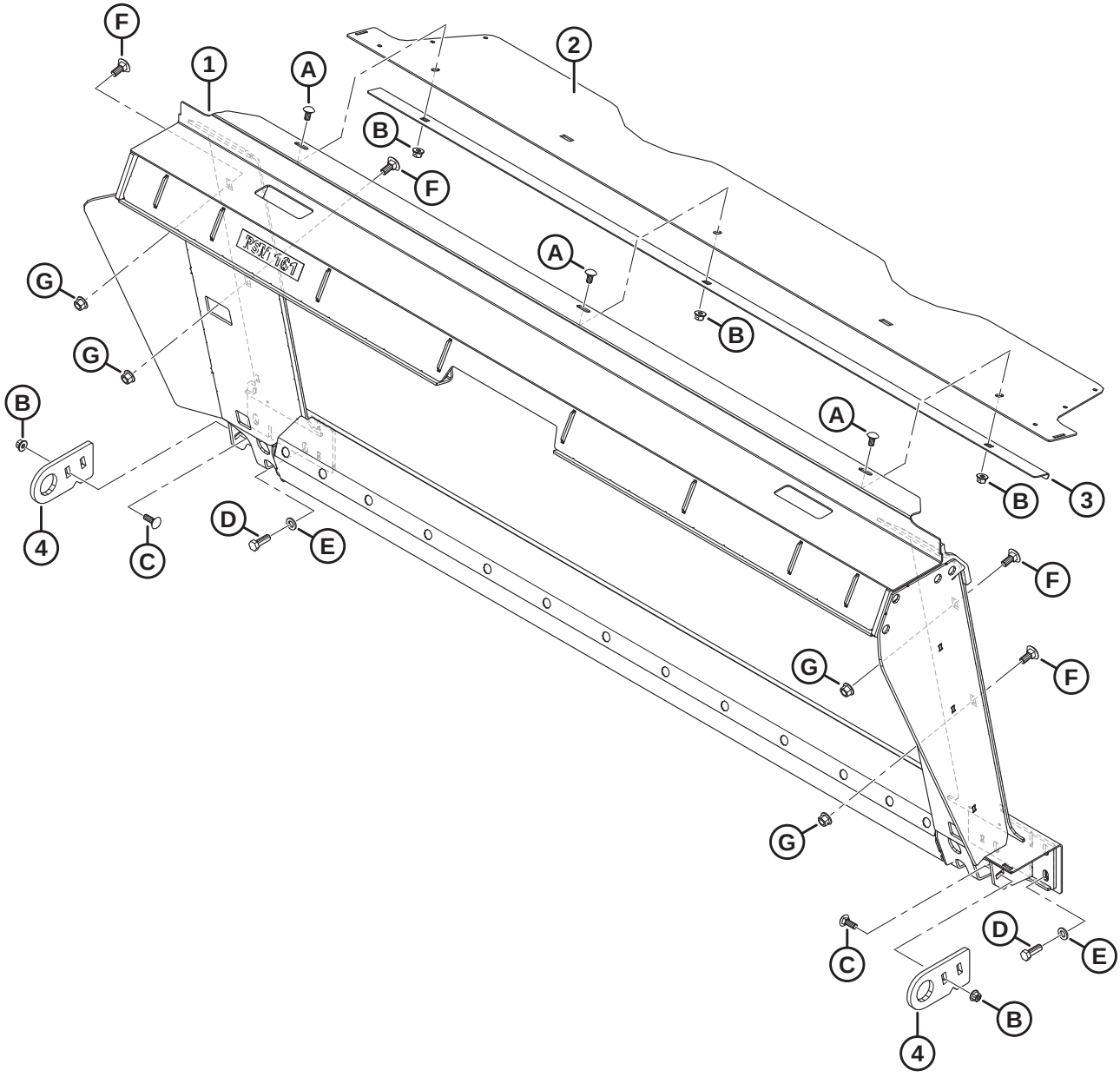

Ref	Part Number	Description	Qty	Serial Number
	B7311	**KIT – RSM 161 TRANSITION FRAME** [550]		
1	**347498**	**FRAME – RSM161 W/DECAL**	**1**	
2	**357195**	**COVER – FEED AUGER TOP**	**1**	
3	**301629**	**RETAINER – DUST COVER**	**1**	
4	**347532**	**ANCHOR – RSM**	**2**	
A	**184657**	**BOLT – RHSSN M10 X 1.5 X 20-8.8-AA1J**		
B	**135799**	**NUT – HEX FLG CTR LOC M10 X 1.5-10**		
C	**184662**	**BOLT – RHSN TFL M10 X 1.5 X 30-8.8-AA1J**		
D	**152730**	**BOLT – HEX HD TFL M12 X 1.75 X 35-10.9-AA1J**		
E	**184714**	**WASHER – FLAT REG M12-300HV**		
F	**184667**	**BOLT – RHSN M12 X 1.75 X 30-8.8-ZINC**		
G	**136431**	**NUT – HEX FLG CTR LOC M12 X 1.75-10**		

550. Kits are available through Whole Goods only.

210 Rostselmash – Hydraulic/Electrical Completion

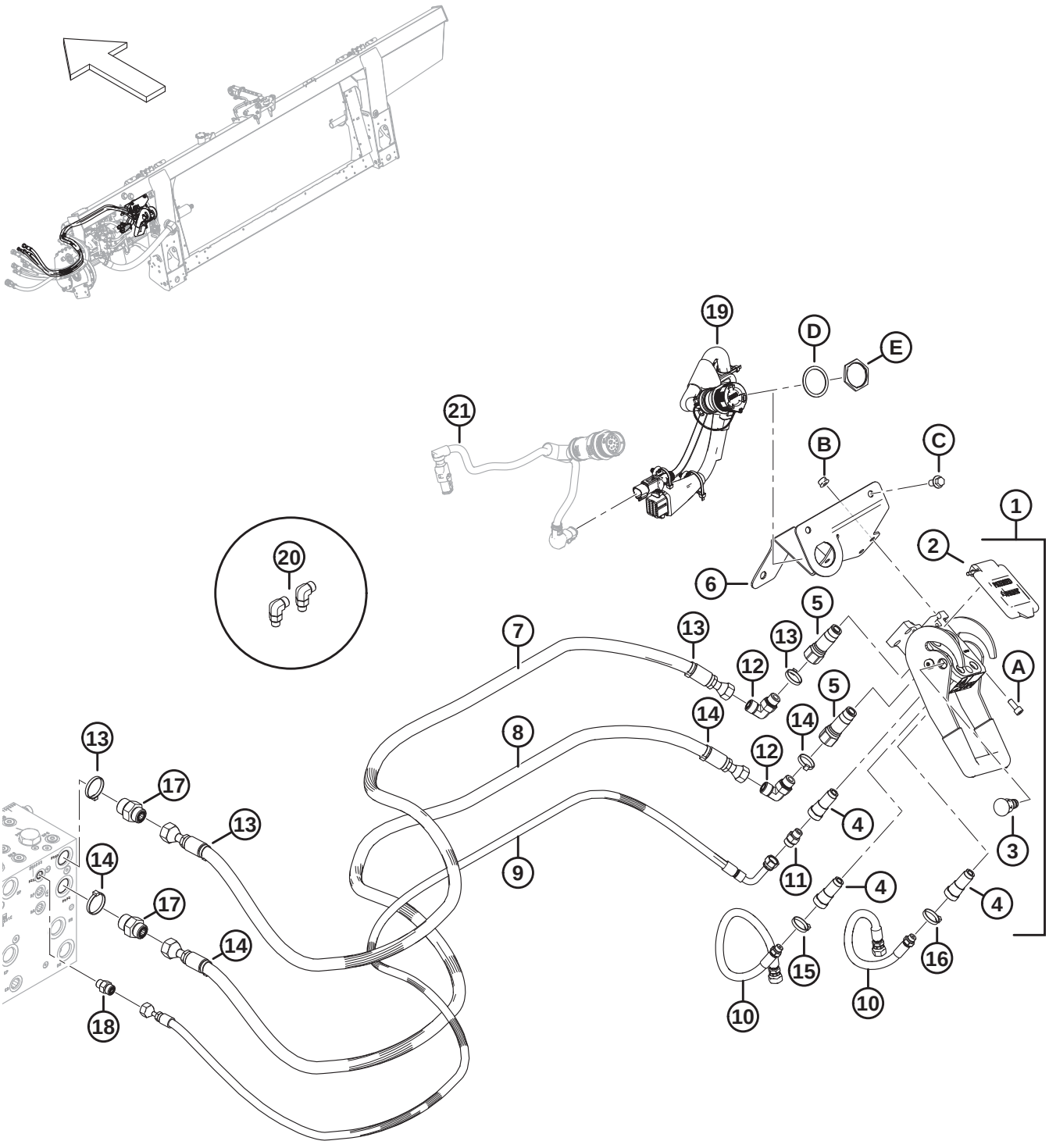

Ref	Part Number	Description	Qty	Serial Number
	B7407	KIT – RSM HYD ELEC COMPLETION [551]		
1	153151	COUPLING – MULTI [552]	1	
2	129800	KIT – COVER CNH MULTI-COUPLER	1	
3	129801	KIT – LATCH BUTTON	1	
4	129976	COUPLING 1/4 IN.	3	
5	129977	COUPLING 3/8 IN.	2	
6	328874	SUPPORT WELDT – CNH MULTI COUPLER	1	
7	314586	HOSE – HYD, REEL DRIVE PRESSURE CNH	1	
8	314587	HOSE – HYD, REEL DRIVE RETURN CNH	1	
9	314588	HOSE – HYD, REEL LIFT, CNH	1	
10	314585	HOSE – HYD, REEL F-A, CNH	2	
11	252694	FITTING – ADAPTER .052 ORIFICE	1	
12	136220	FITTING – ELBOW 90° HYD	2	
	44209	O-RING – Ø2.21 X Ø16.36		
	135866	O-RING – Ø1.78 X Ø12.42		
13	49232	FASTENER – CABLE TIE, WHITE	4	
14	40701	FASTENER – CABLE TIE, YELLOW	4	
15	40702	FASTENER – CABLE TIE, RED	2	
16	49227	FASTENER – CABLE TIE, GREEN	2	
17	135786	FITTING – ADAPTER	2	
	50219	O-RING – Ø1.98 X Ø11.89		
	135865	O-RING – Ø1.78 X Ø9.25		
18	135778	FITTING – ADAPTER	1	
	50219	O-RING – Ø1.98 X Ø11.89		
	135865	O-RING – Ø1.78 X Ø9.25		
19	347630	HARNESS – COMP., ROSTSELMASH	1	
20	136095	FITTING – ELBOW 90° HYD	2	
	135865	O-RING – 1.78 X 9.25		
	50219	O-RING – 1.98 X 11.89		
21	REF	HARNESS – CAB ADAPTER [553]	1	
	REF	MODULE – VALVE DRIVER [553]	1	
A	167307	SCREW – HEX SOC HD M8 X 1.25 X 20-8.8-AA1J		
B	135337	NUT – HEX FLG CTR LK M8 X 1.25-8-AA1J		
C	136151	BOLT – HEX FLG HD TFL M10 X 1.5 X 16-8.8-AA1J		
D	134011	WASHER – LOCK SPRING, DEUTSCH HD, SIZE 24		
E	134010	NUT – PANEL, HD 30, SIZE 24		

551. Kits are available through Whole Goods only.
552. The multicoupler includes multicoupler cover kit (MD #129800), latch button kit (MD #129801), three 1/4 inch couplings (MD #129976), and two 3/8 inch coupling (MD #129977).
553. For the harness, valve driver module, and hardware, refer to Section *179 Electrical – Base, page 435*.

211 (Option) Auger Flighting Kits

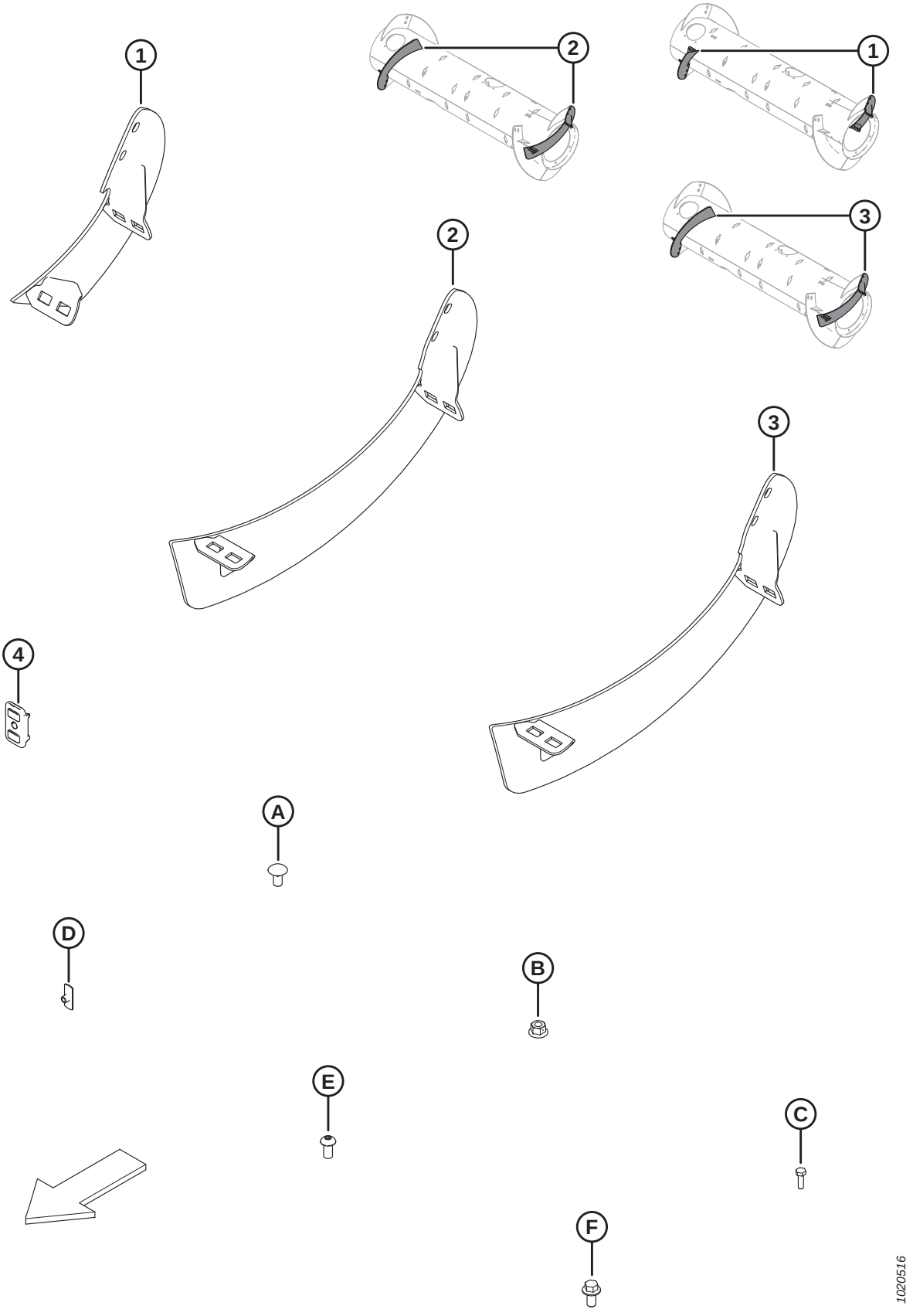

(OPTION) AUGER FLIGHTING KITS

NOTE:

Long flighting kits (MD #B6400 and MD #287032) are used to convert the auger to the optional Ultra Narrow configuration. Refer to your header operator's manual for more information.

Ref	Part Number	Description	Qty	Serial Number
	B6400	KIT – FM100 RTD, WEAR RESISTANT FLIGHT [554]		
	287031	KIT – FM100 RTD, MED FLIGHT [555]		
	287032	KIT – FM100 RTD, LONG FLIGHT [556]		
1	NSS	FLIGHTING, RTD – RH, MED [557]	1	
	NSS	FLIGHTING, RTD – LH, MED [558]	1	
	287887	FLIGHTING, RTD – RH, MED (HIWEAR)	1	
	287888	FLIGHTING, RTD – LH, MED (HIWEAR)	1	
2	NSS	FLIGHTING, RTD – RH, LONG [559]	1	
	NSS	FLIGHTING, RTD – LH, LONG [560]	1	
3	287890	FLIGHTING, RTD – RH, LONG (HIWEAR)	1	
	287889	FLIGHTING, RTD – LH, LONG (HIWEAR)	1	
4	213084	PLUG – FLIGHTING SLOT	2	
A	136178	BOLT – RHSN M10 X 1.5 X 20-8.8-A3L		
B	135799	NUT – HEX FLG CTR LOC M10 X 1.5-10-A3L		
C	252703	BOLT – HEX HD TFL M6 X 1 X 20 X SPCL-12.9-AA2L		
D	197263	NUT – TEE M6 X 1		
E	135723	SCREW – HEX SOC BTN HD M10 X 1.5 X 20-10.9-A3L		
F	152655	BOLT – HEX FLG HD M10 X 1.5 X 20-8.8-A3L		

554. The kit includes Long Flighting kit (MD #287032). Kits are available through Whole Goods only.
555. The kit includes wear-resistant medium flighting, two plugs (MD #213084), hardware, and instructions.
556. The kit includes wear-resistant long flighting, two plugs (MD #213084), hardware, and instructions.
557. Service with medium right flighting (MD #287887).
558. Service with medium left flighting (MD #287888).
559. Service with long right flighting (MD #287890).
560. Service with long left flighting (MD #287889).

212 (Option) FM200 Full Interface Filler – FD2 Series

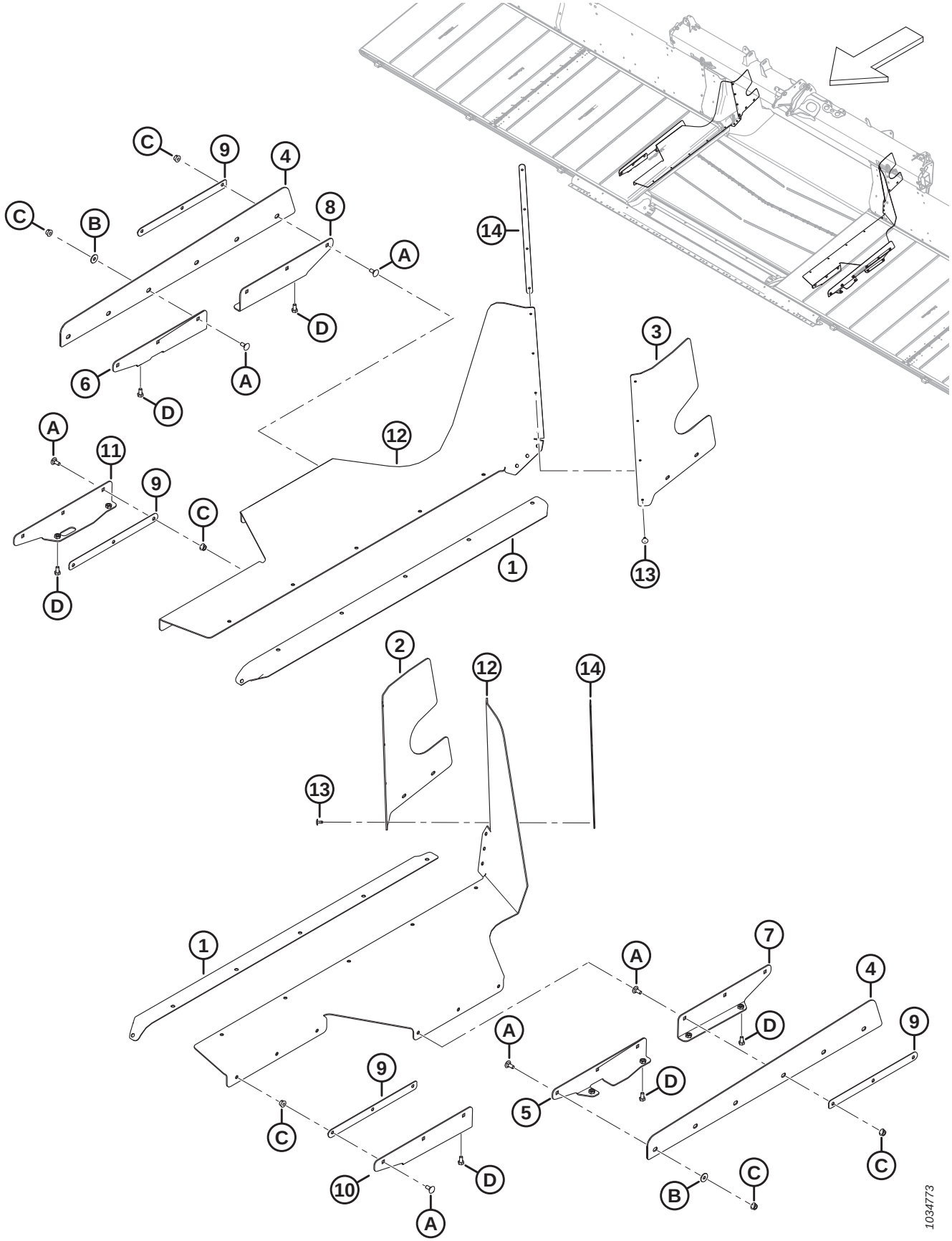

(OPTION) FM200 FULL INTERFACE FILLER – FD2 SERIES

Ref	Part Number	Description	Qty	Serial Number
	B7031	KIT – FULL INTERFACE FILLER FD2 [561]		
1	322750	SEAL – DRAPER FEED DECK	2	
2	328348	FILLER – LH REAR UPPER	1	
3	328349	FILLER – RH REAR UPPER	1	
4	314671	FILLER – LEG SIDE	2	
5	314419	SUPPT – LEG SIDE LH WELDT	1	
6	314420	SUPPT – LEG SIDE RH WELDT	1	
7	301069	SUPPT – SIDE FILLER LH WELDT	1	
8	301067	SUPPT – SIDE FILLER RH WELDT	1	
9	301065	PLATE – FILLER RETAINER	4	
10	301049	SUPPT – SIDE FILLER LH WELDT	1	
11	301047	SUPPT – SIDE FILLER RH WELDT	1	
12	301034	FLAP – FULL FILLER FLEX	2	
13	293053	RIVET – POP	8	
14	276770	PLATE – FILLER RETAINER	2	
A	197171	BOLT – RHSN M8 X 1.25 X 20-8.8-ZINC		
B	184709	WASHER – FLAT LARGE M8-200HV		
C	135337	NUT – HEX FLG CTR LK M8 X 1.25-8-AA1J		
D	50139	BOLT – HEX HD TFL M8 X 1.25 X 16-8.8-AA1J		

561. European Market only. Provides additional sealing between float module and header. Kits are available through Whole Goods only.

213 (Option) FM200 Fillers and Links

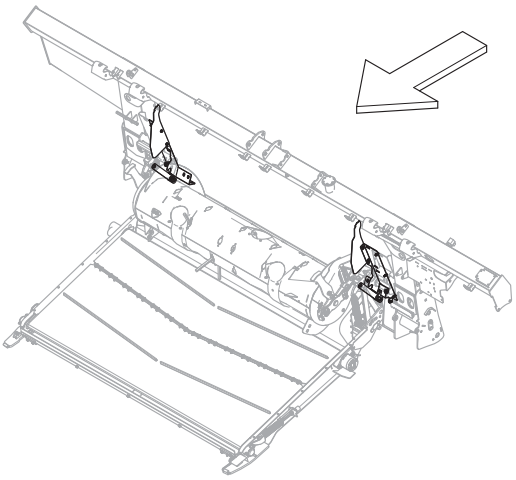

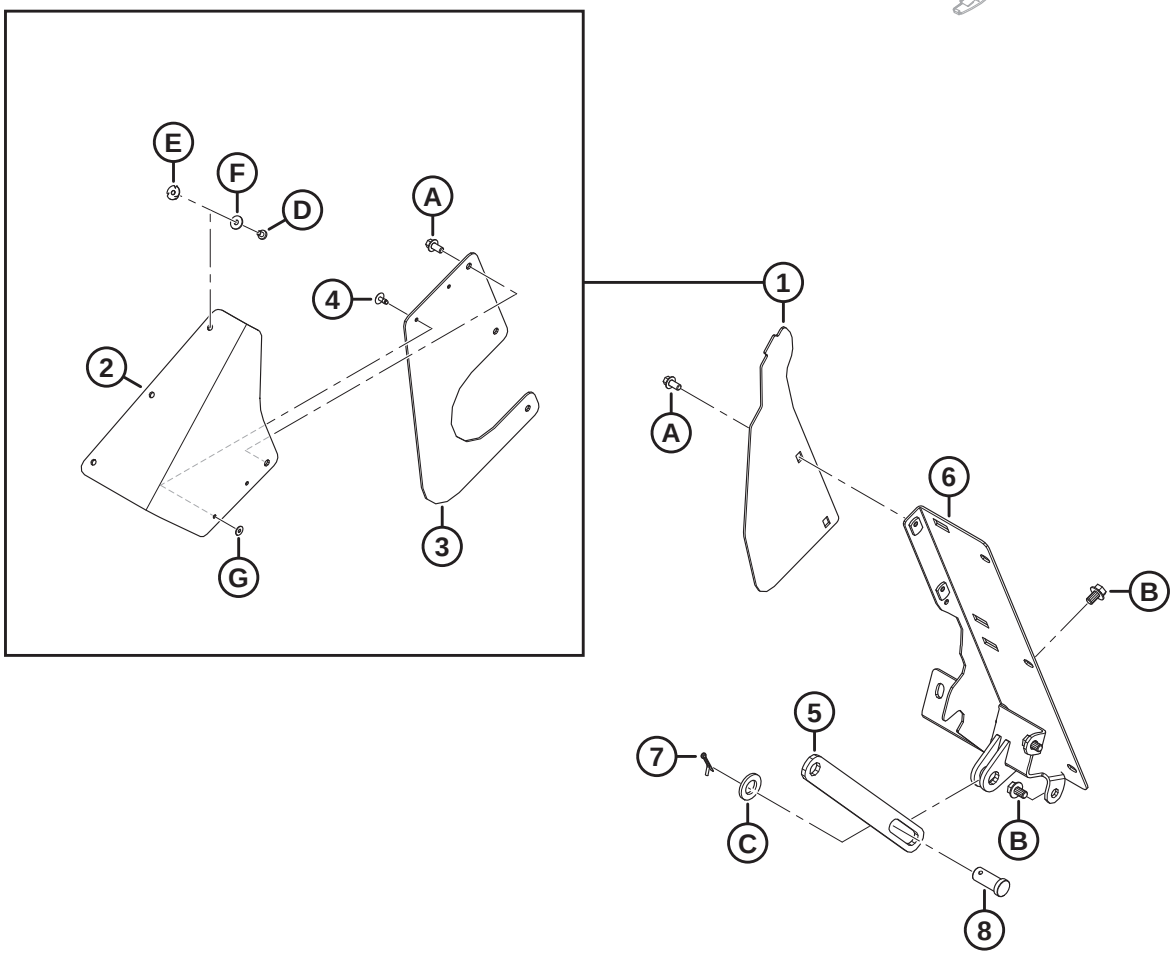

1039547

(OPTION) FM200 FILLERS AND LINKS

Ref	Part Number	Description	Qty	Serial Number
	B7342	KIT – FM200 ADAPTER FILLERS AND LINKS[562]		
1	**357512**	**KIT – DUST COVER SIDES** [563]	**A/R**	
2	**357174**	**FLAP – DUST COVER FILLER**	**2**	
3	**357173**	**COVER – FEED AUGER SIDE**	**2**	
4	**293053**	**RIVET – POP**	**4**	
5	322914	BAR – AUGER SUPPORT LIMITER	1	
6	NSS	FILLER – WELDMENT LH	1	
	NSS	FILLER – WELDMENT RH	1	
7	18648	PIN – COTTER 3/16 DIA X 1.25 ZP	2	
8	11814	PIN – CLEVIS, 23.8 MM, 30 MM ZN PL	2	
A	136485	BOLT – HEX FLG HD TFL M8 X 1.25 X 16-8.8-AA1J		
B	136151	BOLT – HEX FLG HD TFL M10 X 1.5 X 16-8.8-AA1J		
C	112130	WASHER – HARD ASTM F4363/4 IN. NOM. ID AB0C		
D	**252291**	**SCREW – PAN HD M6 X 1 X 8-8.8-AA1J**		
E	**252051**	**NUT – TEE M6**		
F	**184706**	**WASHER – FLAT LARGE M6-200HV**		
G	**293054**	**WASHER – FLAT LARGE M5-200HV-AA1J** [564]		

562. Kits are available through Whole Goods only.
563. This kit is used to service units with superseded side covers (MD #347558). The kit includes two dust cover filler flaps MD #357174, two feed auger side covers (MD #357173), four pop rivets (MD #293053), and hardware.
564. Washer (MD #293054) is not included in the kit, order this washer separately.

214 (Option) Hillside Extension

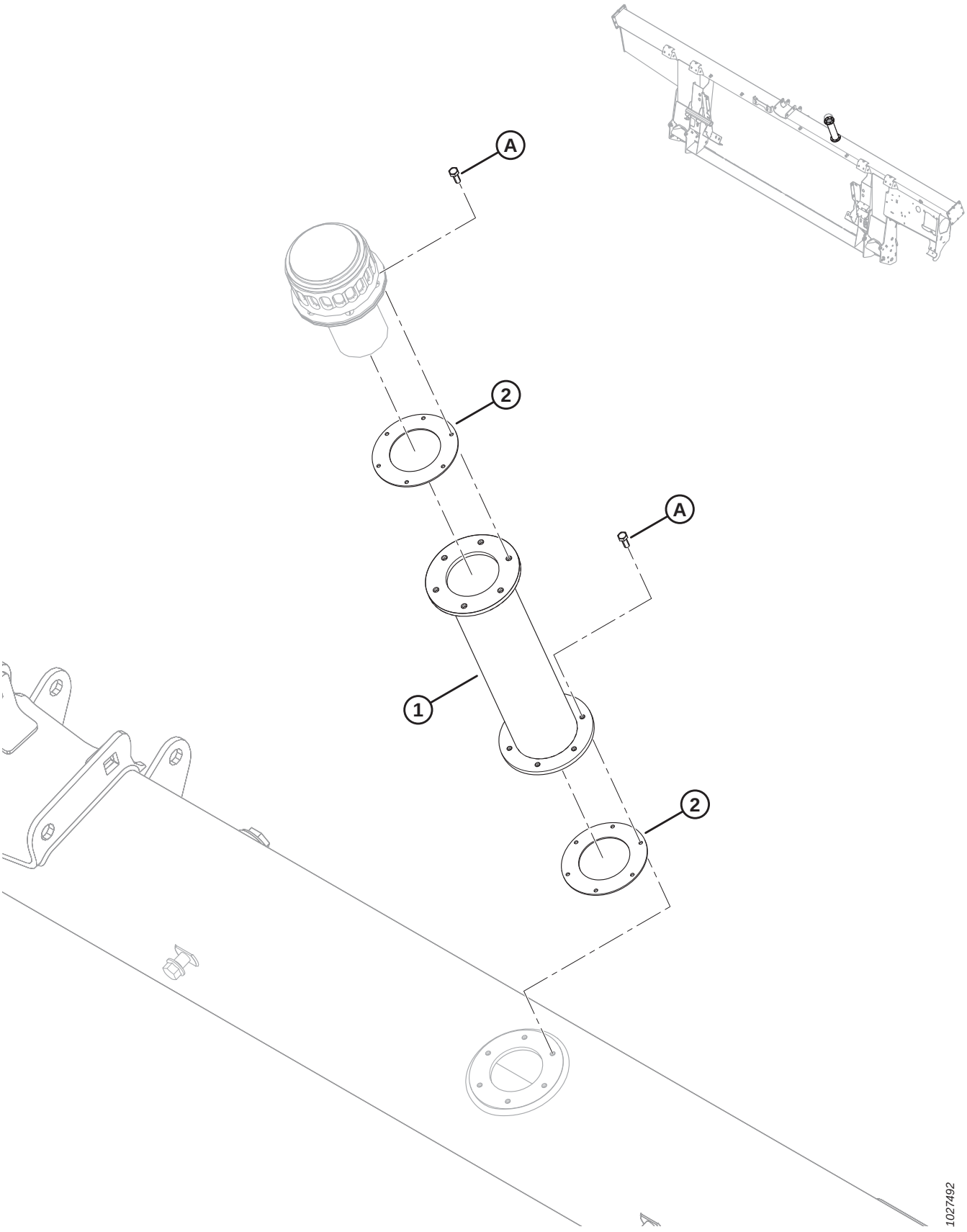

(OPTION) HILLSIDE EXTENSION

Ref	Part Number	Description	Qty	Serial Number
	B6057	KIT – HYDRAULIC RESERVOIR FILL EXTENSION [565]		
	312824	KIT – HYDRAULIC RESERVOIR FILL EXTENSION [566]		
1	NSS	HYD RESERVOIR FILL EXTENSION	1	
2	NSS	GASKET	2	
	166450	DECAL – WARNING, HOT SURFACE	2	
A	320397	SCREW – HEX HD TFL M5 X 0.8 X 12-8.8-PLAIN (2022 AND LATER) [567]		421190–
	135873	SCREW – MACH #10-32 X 0.5 IN. HEX (2021 AND PRIOR) [567]		–421189

565. The kit includes hydraulic reservoir fill extension (NSS), two gaskets (not sold separately), two decals (MD #166450), and twelve screws (MD #320397). Kits are available through Whole Goods only.
566. The kit includes hydraulic reservoir fill extension (not sold separately), two gaskets (NSS), two decals (MD #166450), twelve screws (MD #320397), and instructions.
567. On model year 2021 and prior units, use imperial screw (MD #135873) to prevent cross threading a metric bolt into an imperial threaded hole.

215 (Option) Integration Kit – CLAAS

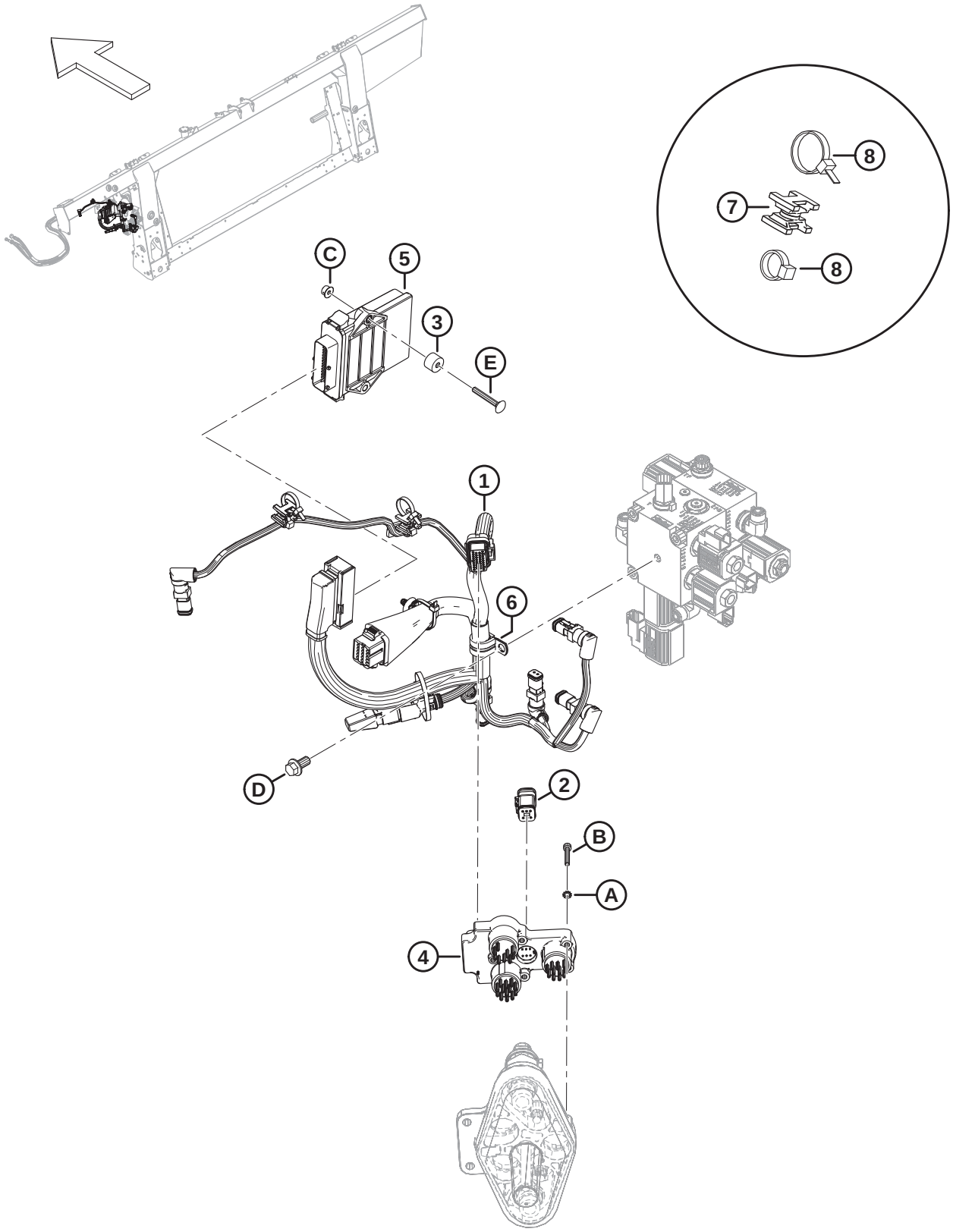

(OPTION) INTEGRATION KIT – CLAAS

Ref	Part Number	Description	Qty	Serial Number
	B7231	KIT – INTEGRATION, CLAAS [568]		
1	357119	HARNESS – FM2 COMP, CLAAS INTEGRATION CONTROLLER	1	
	283215	**DIODE PACK – 6A DIODE** [569]	**1**	
2	337352	PLUG – TERMINATOR	1	
3	328913	SPACER	2	
4	328440	COUPLER MODULE	1	
5	328065	MODULE – HEADER INTEGRATION	1	
6	135709	CLAMP – INSULATED 3/4 IN.	1	
7	134442	SPACER – DUAL SWIVEL SADDLE	2	
8	21763	FASTENER – CABLE TIE, BLACK	4	
A	184703	WASHER – EXT LK TOOTH M5-200HV-AF0C		
B	173117	SCREW – HEX SOC HD M5 X 0.8 X 35-8.8-AA1J		
C	152668	NUT – HEX FLG CTR LOC M6 X 1-8		
D	152655	BOLT – HEX FLG HD M10 X 1.5 X 20-8.8-AA1J		
E	136731	BOLT – RHSN M6 X 1 X 45-8.8-AA1J		

568. Kits are available through Whole Goods only.
569. Service part for CLAAS completion harness MD #337119.

216 (Option) Integration Kit – John Deere

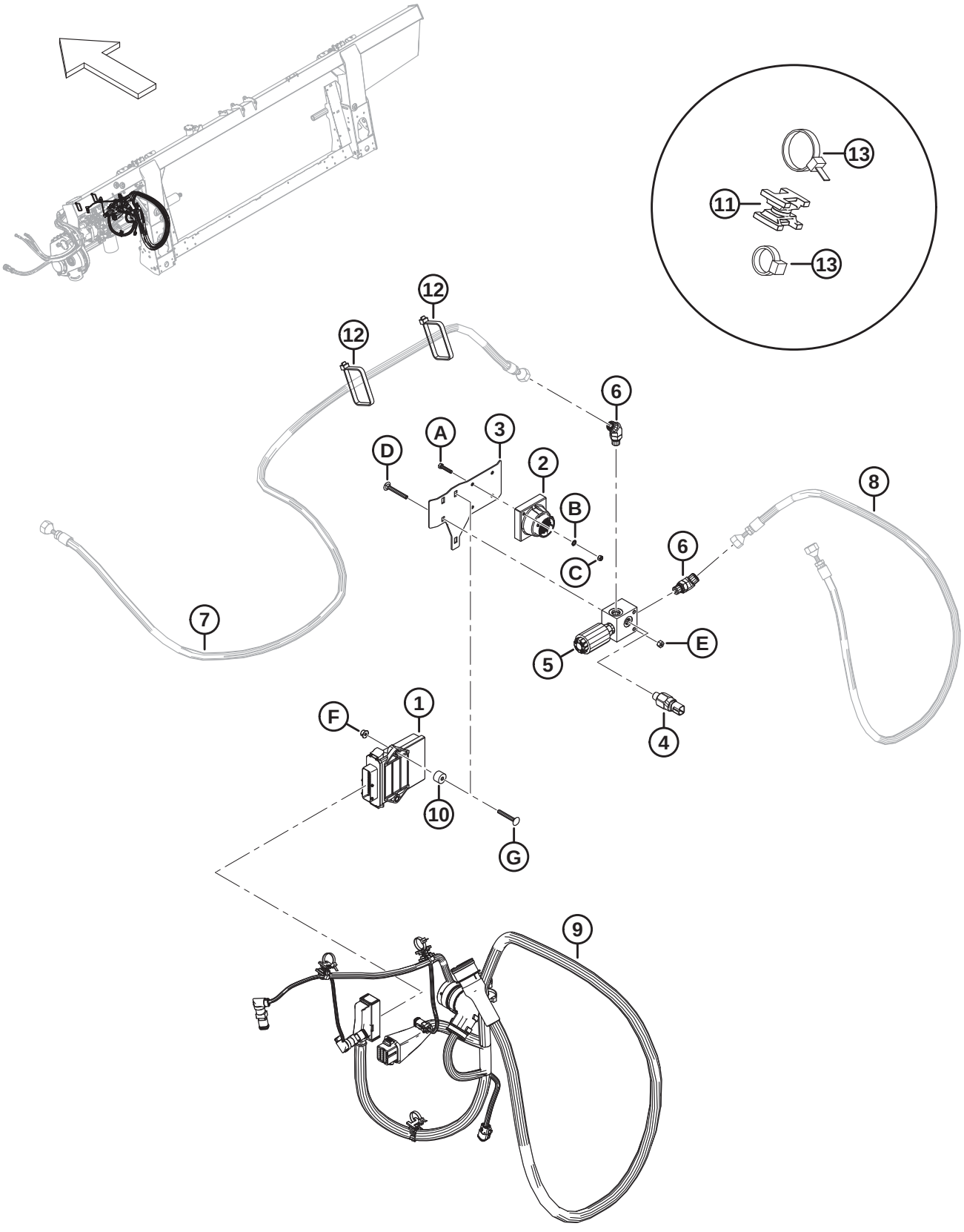

(OPTION) INTEGRATION KIT – JOHN DEERE

Ref	Part Number	Description	Qty	Serial Number
	B7237	KIT – INTEGRATION, JOHN DEERE [570]		
1	500461	MODULE – HDR INTEGRATION DEERE	1	
2	500465	MODULE – DCM	1	
3	337806	PLATE – MOUNT	1	
4	337631	SWITCH – PRESSURE	1	
5	337551	MANIFOLD – BLOCKING VALVE	1	
6	136144	FITTING – ELBOW 45° HYD	2	
	50219	O-RING – Ø1.98 X Ø11.89		
	135865	O-RING – Ø1.78 X Ø9.25		
7	REF	HOSE – REEL [571]		
8	REF	HOSE – HYD, REEL [571]		
9	337353	HARNESS – COMP., JD INT2S.	1	
10	328913	SPACER	2	
11	134442	SPACER – DUAL SWIVEL SADDLE	4	
12	30753	FASTENER – CABLE TIE, BLACK, 305 MM	2	
13	21763	FASTENER – CABLE TIE, BLACK, 160 MM	6	
A	252365	BOLT – HEX HD M5 X 0.8 X 25-8.8-AA1J		
B	184703	WASHER – EXT LK TOOTH M5-200HV-AF0C		
C	184682	NUT – HEX M5 X 0.8-8-AA1J		
D	184644	BOLT – RHSN M6 X 1 X 50-8.8-ZINC		
E	136773	NUT – HEX CTR LOC M6 X 1-8-AA1J		
F	152668	NUT – HEX FLG CTR LOC M6 X 1-8		
G	136731	BOLT – RHSN M6 X 1 X 45-8.8-AA1J		

570. Kits are available through Whole Goods only.

571. The hose is not included in this kit. For hydraulic and electrical completion parts, refer to Section *198 John Deere S and T Series – Hydraulic/Electrical Completion, page 483*.

217 (Option) Stripper Bars

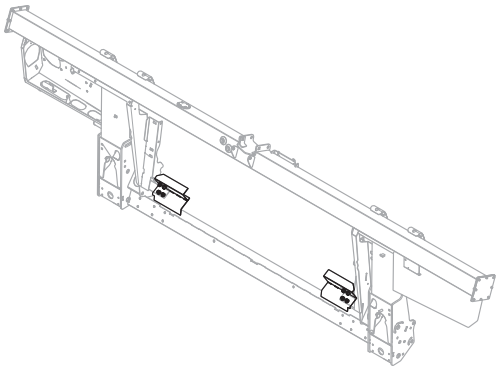

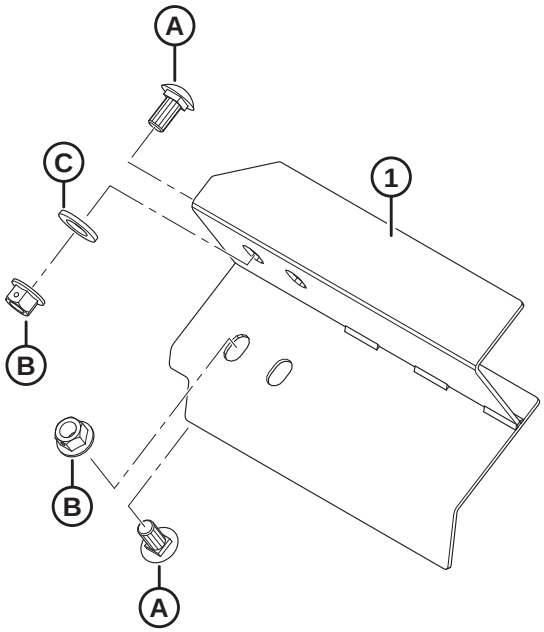

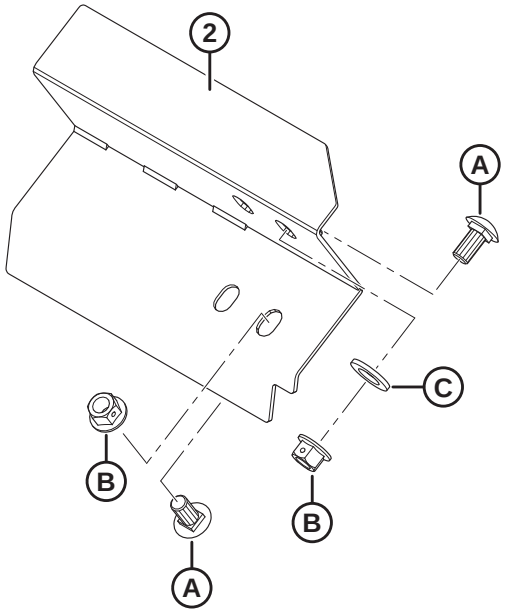

1023852

(OPTION) STRIPPER BARS

Ref	Part Number	Description	Qty	Serial Number
	B6042	KIT – STRIPPER BARS, 265 MM LG (WITHOUT CUTOUT) [572]		
	B6043	KIT – STRIPPER BARS, 265 MM LG (WITH CUTOUT) [572]		
	B6044	KIT – STRIPPER BARS, 325 MM LG [572]		
	B6045	KIT – STRIPPER BARS, 365 MM LG [572]		
	B6046	KIT – STRIPPER BARS, 403 MM LG [572]		
	B6213	KIT – STRIPPER BARS, 515 MM LG [572]		
1	213523	STRIPPER – WELDMENT, LEFT (265 MM LG W/O CUTOUT)	1	
	276899	STRIPPER – WELDMENT, LEFT (265 MM LG W/ CUTOUT) [573]	1	
	213573	STRIPPER – WELDMENT, LEFT (325 MM LG)	1	
	213567	STRIPPER – WELDMENT, LEFT (365 MM LG)	1	
	213561	STRIPPER – WELDMENT, LEFT (403 MM LG)	1	
	213579	STRIPPER – WELDMENT, LEFT (515 MM LG)	1	
2	213525	STRIPPER – WELDMENT, RIGHT (265 MM LG W/O CUTOUT)	1	
	276900	STRIPPER – WELDMENT, RIGHT (265 MM LG W/ CUTOUT) [573]	1	
	213574	STRIPPER – WELDMENT, RIGHT (325 MM LG)	1	
	213568	STRIPPER – WELDMENT, RIGHT (365 MM LG)	1	
	213562	STRIPPER – WELDMENT, RIGHT (403 MM LG)	1	
	213580	STRIPPER – WELDMENT, RIGHT (515 MM LG)	1	
A	135903	BOLT – RHSN M12 X 1.75 X 25-8.8-A3L		
B	136431	NUT – HEX FLG CTR LOC M12 X 1.75-10-A3L		
C	184717	WASHER – FLAT REG M16-200HV-AA1J		

572. Kits are available through Whole Goods only.
573. For John Deere S6X0 Series combines.

Index

795 392
1709 408
4761 90
4762 264
5512 376
6647 376
7642 ..... 234, 386, 458, 480, 502
7674 ..... 240, 242, 244
9213 392
9333 392
11695 90
11814 ..... 396, 518
13125 ..... 4, 6, 56, 58, 60, 290, 452, 468
13617 420
16235 114
16266 10
16681 ..... 104, 106, 108, 110, 112
17006 364
18592 464
18598 394
18600 264
18601 ..... 162, 164, 220, 222, 396, 406
18603 ..... 90, 426
18604 50
18605 ..... 48, 114
18606 ..... 90, 348, 352
18607 ..... 2, 104, 106, 108, 110, 112, 114, 116, 120, 124, 282, 374
18608 ..... 264, 280, 284, 326, 404, 408
18609 ..... 278, 326, 404, 424
18619 290
18621 ..... 94, 96, 98, 104, 106, 110, 112
18624 ..... 334, 342
18626 ..... 100, 102
18629 ..... 100, 102
18637 ..... 24, 26, 28
18638 ..... 388, 394
18648 ..... 94, 96, 98, 100, 102, 266, 280, 290, 326, 396, 518
18669 ..... 270, 272
18671 ..... 48, 114, 266, 280, 290, 326, 402, 404
18704 ..... 2, 104, 106, 110, 112
18768 ..... 348, 352
18798 ..... 282, 360
18867 ..... 24, 26, 28
18898 ..... 410, 414
18916 ..... 282, 328
19542 290
19809 468
19958 ..... 108, 114
20312 404
21010 420
21032 280
21061 364
21194 90
21235 ..... 388, 392
21301 ..... 116, 120, 124, 126
21363 362
21540 ..... 2, 268, 408
21572 336
21763 ..... 156, 180, 184, 194, 230, 232, 272, 280, 348, 352, 364, 424, 428, 436, 438, 466, 472, 474, 478, 496, 522, 524
21859 ..... 346, 350
22072 52
23163 442
23164 246
23165 442
26429 290
30144 ..... 94, 96, 98
30228 330
30316 ..... 378, 382
30441 ..... 30, 32
30463 408
30505 ..... 30, 32, 394, 396
30520 ..... 114, 280, 326
30627 ..... 32, 52, 348, 352, 382, 404
30628 ..... 154, 234, 422
30629 ..... 94, 96, 98
30630 ..... 118, 122, 124, 126, 464
30631 ..... 50, 240, 242, 244, 358
30632 ..... 348, 352, 370, 450, 456, 486, 494
30655 ..... 50, 118, 122
30660 ..... 178, 180, 182, 186, 188, 192, 196, 198, 358
30661 ..... 346, 350
30693 426
30701 374
30702 374
30715 ..... 52, 282, 286, 300, 412, 414
30716 ..... 338, 344
30753 ..... 178, 182, 186, 188, 192, 196, 198, 402, 428, 448, 454, 466, 472, 474, 486, 494, 524
30856 ..... 2, 50
30934 ..... 348, 352
30971 ..... 156, 160, 164, 166, 170, 174, 176, 202, 204, 206, 360, 364, 432, 434, 450, 454
31465 394
31774 ..... 2, 118, 122, 124, 406
32070 ..... 246, 442
32247 468
36651 ..... 378, 382
39272 284
40095 378
40701 ..... 156, 196, 198, 206, 208, 212, 216, 434, 448, 454, 462, 466, 472, 474, 486, 494, 500, 512

40702.....156, 180, 184, 194, 364, 424, 432, 434, 448, 454, 462, 466, 486, 494, 500, 512
40703.....156, 194, 196, 208, 212, 216, 364, 424, 432, 434, 472, 474
40704.....156, 180, 184, 194, 364, 424, 432, 434, 472, 474
42292..... 286
42592.....30
44209.....156, 158, 160, 164, 218, 222, 432, 434, 462, 484, 492, 500, 512
44210.....160, 164, 166, 170, 174, 176, 204, 206, 346, 350, 364, 432, 434, 448, 454, 466, 470, 474, 484, 492
45427..... 426
47225.....270, 272
49227.....156, 186, 188, 198, 424, 432, 434, 448, 454, 462, 466, 486, 494, 500, 512
49232.....156, 206, 434, 448, 454, 462, 466, 472, 474, 486, 494, 500, 512
49306.....346, 350
49378.....290, 324
49904..... 404
50071..... 234
50083..... 388
50139..... 264, 410, 414, 516
50140..... 358
50154..... 390
50155.....2, 40, 42, 44, 122, 126, 390, 394
50193.....10, 154, 262, 324
50219.....156, 158, 174, 176, 208, 212, 216, 424, 434, 448, 450, 454, 462, 466, 470, 472, 474, 484, 486, 492, 494, 500, 512, 524
50220..... 158, 364, 430, 432, 434
50223..... 160, 164, 346, 350
52129.....2
100500..... 48, 70, 72, 74, 78, 82, 86, 404
100577..... 158
100709.....92
100710.....92
100712.....92
100714.....92
100715.....92
100717.....92
100718.....92
100719.....92
100720.....92
100721.....92
100722.....92
100723.....92
100726.....92
100862..... 420
101007.....280, 326
101095.....334, 342
101897.....24, 26, 28
102264.....6, 56, 58, 60, 290, 334, 342, 424
102629..... 92
102630..... 92
102711.....158, 494
103361..... 264
103575..... 158
103879.....108, 114
108172.....330, 348, 352
109613..... 238
109773..... 438
111521.....116, 120
111528.....410, 414
111545..... 430
112130.....38, 396, 518
112823.....204, 206
113152..... 92
113153..... 92
113222..... 48, 70, 72, 74, 78, 82, 86, 404
113229..... 90
113561.....284, 468
113566..... 284
113813..... 264
113937.....70, 72, 74, 78, 82, 86
114142..... 466
114143..... 466
115146.....246, 442
115670.....70, 72, 74, 78, 82, 86
115759..... 246
118011..... 420
118185..... 420
118239..... 284
119529.....338, 344
119558.....338, 340, 342
119560..... 338
119565..... 338
119593.....334, 342
119623..... 334
119641..... 334
119653.....338, 340
119654.....338, 340, 342
119655..... 338
119656..... 338
119666..... 334
119667..... 334
119672.....334, 342
119691.....334, 342
119692.....340, 342
119693.....340, 342
119694..... 340
119696.....334, 342
119697.....334, 342
119705..... 334
119706..... 334
119725.....334, 342
119726.....338, 344
119737..... 344

119738 ..... 334, 342
119745 342
119757 ..... 334, 342
119766 338
120845 ..... 30, 32
120901 90
123180 ..... 386, 400, 458, 480, 502
123318 366
123406 394
123978 424
125377 ..... 184, 194, 196
129148 ..... 448, 454
129149 ..... 484, 492
129313 246
129481 ..... 470, 474
129772 ..... 472, 478
129773 472
129800 ..... 462, 500, 512
129801 ..... 462, 500, 512
129859 ..... 484, 492
129860 ..... 484, 492
129965 ..... 472, 478
129976 ..... 462, 500, 512
129977 ..... 462, 500, 512
130283 418
132117 442
132531 30
132607 ..... 30, 32
133047 406
133136 426
133138 468
133241 464
133242 464
133372 420
133439 468
133631 378
133632 380
133634 378
133641 384
133877 386
133942 360
133992 ..... 280, 326
134010 ..... 462, 500, 512
134011 ..... 462, 500, 512
134437 366
134442 ..... 230, 232, 348, 352, 436, 478, 496, 522, 524
134612 ..... 470, 478
134728 ..... 230, 232, 436, 478
134730 ..... 230, 232, 436, 478
135156 ..... 282, 328, 390, 394
135157 394
135226 196
135234 424
135235 354
135248 336
135266 ..... 156, 186, 188
135267 ..... 454, 484, 492
135290 392
135301 496
135319 292
135335 362
135336 20
135337 ..... 4, 6, 8, 20, 24, 26, 28, 30, 34, 36, 38, 50, 54, 56, 58, 60, 114, 148, 152, 168, 172, 174, 176, 204, 206, 238, 264, 270, 272, 286, 292, 300, 348, 352, 358, 420, 422, 446, 450, 456, 462, 466, 472, 476, 486, 494, 500, 506, 512, 516
135369 ..... 282, 390, 394
135400 430
135401 ..... 264, 370
135443 ..... 178, 186, 188, 196, 204, 206, 208, 212, 216
135444 ..... 180, 184, 194, 434, 448, 454, 486, 494
135554 ..... 364, 430
135598 448
135626 418
135630 ..... 320, 322, 418
135696 ..... 20, 288, 292
135709 ..... 470, 478, 522
135716 280
135723 ..... 400, 514
135734 430
135778 ..... 156, 174, 176, 178, 180, 182, 184, 186, 188, 192, 194, 196, 198, 208, 212, 216, 262, 266, 424, 434, 450, 454, 462, 466, 472, 474, 484, 486, 492, 500, 512
135780 ..... 156, 160, 164, 218, 222, 432
135783 ..... 264, 334, 342, 362, 376
135785 ..... 20, 24, 26, 28, 30, 204, 206, 210, 212, 216, 264, 336, 342, 348, 352, 358, 396, 416, 422
135786 ..... 156, 434, 450, 454, 462, 466, 470, 474, 484, 494, 500, 512
135788 ..... 156, 160, 164, 166, 170, 174, 176, 202, 204, 206, 364, 432, 434
135789 ..... 364, 432, 434
135799 ..... 4, 6, 12, 20, 24, 26, 28, 30, 46, 50, 94, 96, 98, 100, 102, 134, 136, 138, 146, 148, 150, 152, 154, 162, 164, 166, 172, 204, 206, 210, 212, 216, 234, 238, 264, 266, 270, 272, 276, 282, 288, 292, 304, 308, 336, 342, 348, 352, 354, 358, 378, 382, 384, 388, 396, 398, 400, 406, 410, 414, 416, 420, 422, 444, 446, 452, 460, 464, 468, 482, 488, 490, 498, 504, 510, 514
135800 330
135821 ..... 364, 432, 434
135865 ..... 156, 174, 176, 180, 184, 186, 188, 192, 196, 198, 208, 212, 214, 216, 266, 354, 424, 434, 448, 450, 454, 462, 466, 470, 472, 474, 484, 486, 492, 494, 500, 512, 524
135866 ..... 156, 160, 164, 218, 222, 364, 432, 434, 462, 466, 470, 474, 484, 492, 500, 512

135867 .....156, 160, 164, 166, 170, 174, 176, 204, 206, 346, 350, 434, 448, 450, 454
135868 .....156, 160, 164, 166, 170, 174, 176, 202, 204, 206, 364, 432, 434
135873 .....360, 520
135888 434
135889 202
135894 ..... 20, 30, 34, 36, 38, 450, 456, 486, 494
135900 ..... 52, 348, 352, 390
135903 ..... 24, 26, 28, 32, 34, 36, 38, 104, 106, 108, 110, 112, 452, 460, 468, 482, 490, 498, 526
135952 158
135957 ..... 160, 164, 346, 350
135959 122
135995 .....404, 424
136005 .....62, 64, 66, 68, 320, 322
136036 .....62, 64, 66, 68, 274, 314, 316, 318, 320, 322, 420, 468
136050 422
136057 ..... 50, 60
136088 408
136095 .....178, 182, 184, 186, 188, 192, 194, 196, 198, 424, 448, 454, 470, 474, 484, 492, 512
136106 430
136108 .....470, 474
136113 .....348, 410, 414
136122 ..... 2, 94, 96, 98, 100, 266
136124 2
136137 50
136141 ..... 50, 452
136143 ..... 2, 104, 106, 108, 110, 112, 114
136144 .....184, 196, 424, 470, 474, 492, 524
136145 .....178, 182, 192, 208, 212, 216
136146 .....180, 186, 188, 198, 208, 212, 216
136150 .....178, 182, 192
136151 ..... 6, 46, 56, 58, 60, 134, 136, 138, 224, 226, 228, 304, 308, 408, 426, 462, 466, 500, 512, 518
136159 264
136167 240
136178 ..... 20, 270, 272, 276, 398, 400, 406, 468, 504, 514
136181 448
136209 ..... 118, 122, 124, 126
136211 .....56, 58, 60, 224, 226, 228
136219 484
136220 ..... 434, 462, 500, 512
136231 .....20, 288, 410, 414
136240 .....184, 194, 196
136244 ..... 160, 164, 218, 222
136245 .....160, 164, 166, 170, 202, 204
136248 420
136249 354
136269 360
136291 ..... 118, 122, 324, 394
136300 ..... 148, 152, 238, 336
136302 358
136308 .....420, 428
136310 .....100, 102
136312 274
136324 126
136325 .....208, 212, 214
136326 .....208, 212, 216
136327 .....204, 206
136339 .....10, 292, 338, 358
136342 .....10, 290, 338, 358
136355 .....162, 164, 166, 172, 202, 204
136378 .....324, 396
136395 ..... 146, 148, 152, 304, 308
136399 154
136401 .....118, 122
136431 ..... 4, 20, 24, 26, 28, 30, 32, 34, 36, 38, 52, 90, 104, 106, 108, 110, 112, 116, 122, 124, 126, 132, 134, 136, 138, 146, 148, 282, 286, 288, 290, 304, 308, 324, 328, 348, 352, 362, 390, 394, 420, 426, 428, 444, 446, 452, 460, 464, 468, 482, 488, 490, 498, 506, 510, 526
136440 ..... 94, 98, 100, 264, 282, 328, 334, 342, 390, 394, 426
136441 390
136442 .....162, 164, 166, 172, 178, 180, 182, 184, 186, 188, 192, 194, 198
136443 122
136445 114
136446 ..... 118, 122, 124, 282
136473 52
136476 .....50, 452, 460, 498
136477 268
136485 ..... 114, 236, 238, 292, 360, 410, 414, 518
136486 .....168, 172, 174, 176, 204, 206
136492 8
136495 ..... 50, 162, 164, 166, 170
136506 .....444, 446, 468
136512 .....2, 50
136513 2
136524 158
136527 204
136540 .....178, 180, 182, 190, 192, 200, 208, 212, 216
136561 .....236, 238, 240, 242, 244, 358
136592 ..... 116, 122, 412, 414
136596 406
136604 236
136613 236
136625 468
136635 238
136640 ..... 4, 146, 148, 150, 304, 308
136653 354
136654 354
136655 .....232, 272, 402, 436, 470, 478
136701 ..... 2, 94, 98, 100
136702 .....118, 122

136704 406
136731 ..... 478, 522, 524
136736 ..... 20, 394
136741 ..... 220, 222
136746 ..... 174, 176
136748 ..... 6, 272, 496
136749 ..... 12, 276, 334, 342
136755 426
136757 394
136759 ..... 30, 34, 36, 38, 118, 122, 292, 358, 386
136773 ..... 270, 272, 282, 286, 358, 524
136779 ..... 168, 172, 174, 204
136824 ..... 34, 36, 38, 50, 238
136842 ..... 118, 122
136848 2
136850 158
136857 282
136882 ..... 116, 120
136887 2
136900 366
137092 330
137118 330
137375 ..... 90, 116, 120, 346, 350
137476 ..... 116, 120, 124, 126
137519 330
137529 ..... 132, 304, 306
137721 ..... 116, 120, 126
137754 330
137825 ..... 120, 126
137980 ..... 128, 302, 306
139003 92
140225 442
140250 124
141220 284
142777 378
143107 90
144531 ..... 284, 326
144724 282
145249 ..... 30, 32
145840 ..... 24, 26, 28
148798 38
150891 378
151691 392
151793 392
151941 488
151942 488
152009 324
152193 50
152274 362
152395 426
152439 ..... 36, 38, 104, 106, 110, 112, 446, 506
152520 ..... 52, 100, 102, 420
152602 ..... 90, 264
152655 ..... 4, 20, 46, 152, 238, 288, 292, 304, 308, 332, 354, 362, 400, 426, 450, 456, 472, 476, 478, 486, 494, 514, 522
152668 ..... 6, 116, 122, 126, 154, 178, 182, 192, 208, 212, 216, 236, 272, 286, 358, 406, 478, 494, 496, 522, 524
152670 358
152702 ..... 282, 324
152730 ..... 30, 114, 118, 122, 124, 126, 394, 430, 444, 452, 488, 510
152731 362
152732 ..... 30, 94, 96, 98, 100, 102, 352, 354
152779 ..... 282, 292, 362
153151 ..... 462, 500, 512
156178 ..... 94, 96, 98
156501 404
156741 404
156743 ..... 394, 406
156783 468
156948 ..... 460, 498
158080 452
158174 158
159020 422
162116 ..... 470, 474
163598 ..... 448, 454, 486, 494
164061 ..... 116, 120, 124, 126
164213 ..... 116, 120, 124, 126
164214 ..... 116, 120, 124, 126
164215 114
164216 114
165168 154
165218 246
165524 ..... 14, 16, 18, 246, 282
165588 154
165735 ..... 30, 32
166450 520
167307 ..... 462, 500, 512
170851 ..... 180, 186, 188, 198
172259 32
172340 ..... 346, 350
172558 394
173117 ..... 478, 522
174131 442
174304 ..... 90, 346, 350
174418 50
174849 ..... 128, 302, 306, 320, 322
174879 ..... 100, 102
181475 334
181649 392
182181 ..... 484, 492
182182 ..... 484, 492
183506 388
183508 ..... 388, 392
184303 ..... 174, 176, 178, 180, 182, 186, 188, 192, 196, 198

184460 ..... 484, 492
184461 ..... 160, 164, 166, 170, 174, 176, 346, 350, 454
184462 ..... 466, 484, 492
184463 ..... 364, 428, 432, 434, 466, 470, 474, 484, 492
184524 ..... 486, 494
184584 330
184587 370
184597 ..... 130, 304, 308
184603 ..... 484, 492
184642 272
184643 286
184644 ..... 178, 182, 192, 208, 212, 216, 494, 524
184646 ..... 50, 282, 286
184648 422
184649 4
184652 ..... 2, 300, 338, 344, 422, 472, 476
184656 ..... 180, 184, 194, 206, 270, 272, 292
184657 ..... 6, 410, 414, 444, 452, 460, 464, 468, 482, 488, 490, 498, 510
184659 406
184661 ..... 4, 12, 348, 352, 358
184662 ..... 32, 154, 270, 272, 292, 378, 384, 388, 406, 444, 446, 510
184664 ..... 264, 266, 404
184665 ..... 4, 20, 90, 290, 348, 352, 362
184667 ..... 4, 24, 26, 118, 122, 286, 334, 342, 444, 464, 488, 490, 510
184669 ..... 90, 122, 410, 414, 460, 468, 482, 490, 498
184672 286
184673 ..... 90, 290
184675 ..... 386, 468
184677 ..... 52, 264
184679 286
184681 50
184682 524
184683 ..... 56, 58, 60, 236
184685 ..... 50, 238
184688 ..... 56, 58, 60
184692 ..... 154, 162, 164, 166, 172, 178, 180, 182, 184, 186, 190, 192, 194, 200
184694 ..... 2, 40, 42, 44, 420
184695 290
184696 ..... 12, 90, 312, 358
184697 ..... 130, 304, 306
184701 236
184703 ..... 478, 522, 524
184705 ..... 50, 56, 58, 60, 238
184706 ..... 22, 238, 272, 360, 518
184708 ..... 54, 60, 116, 122, 282, 358
184709 ..... 40, 50, 270, 272, 286, 338, 344, 410, 414, 422, 516
184711 ..... 30, 32, 52, 362, 420, 422, 450, 454, 470, 474, 484, 486, 492, 494
184712 ..... 4, 348, 352, 404
184714 ..... 62, 64, 66, 68, 122, 126, 290, 362, 426, 430, 444, 452, 460, 464, 468, 482, 488, 490, 498, 510
184717 ..... 100, 102, 104, 106, 110, 112, 266, 286, 336, 342, 452, 488, 490, 526
184718 ..... 2, 20
184721 174
184977 48
187018 448
187031 448
187137 ..... 398, 400, 504
187428 ..... 388, 392
187477 376
187518 394
187660 424
188470 ..... 264, 266
190752 422
190866 ..... 470, 474
191353 ..... 116, 120
191489 ..... 6, 24, 26, 28, 34, 36, 38, 114, 348, 352
191704 ..... 484, 492
191705 ..... 484, 492
193187 284
193240 278
193241 278
193242 278
193243 278
194082 360
194521 378
197122 392
197135 ..... 116, 122, 270, 272
197171 ..... 24, 26, 28, 358, 420, 422, 446, 466, 506, 516
197229 238
197230 ..... 236, 272
197263 ..... 386, 398, 400, 458, 480, 502, 504, 514
197275 30
197319 ..... 460, 498
197320 ..... 282, 360, 460, 498
206340 238
209045 364
210340 ..... 280, 326
210661 280
210690 278
210918 282
210985 ..... 278, 326
212250 404
213084 ..... 398, 400, 458, 480, 502, 504, 514
213110 392
213112 392
213363 424
213418 416
213419 416
213420 392
213459 438
213523 526
213525 526

213546 388
213552 388
213554 388
213561 526
213562 526
213567 526
213568 526
213573 526
213574 526
213579 526
213580 526
213608 386
213633 422
213634 422
213635 422
213649 388
213654 388
213656 386
213657 386
213659 388
213660 386
213679 388
213713 ..... 410, 414
213731 388
213733 388
213750 388
213801 388
213802 388
213824 ..... 472, 478
213851 ..... 388, 392
213857 392
213859 388
220084 246
220107 6
220317 392
220766 378
220807 260
220814 260
220817 256
220824 256
220831 258
220832 258
220834 258
220835 260
220836 256
220939 ..... 128, 302, 306
220941 ..... 128, 302, 306, 330
220959 ..... 484, 492
226280 ..... 62, 64, 66, 68, 274, 320, 322
226295 ..... 62, 64, 66, 68, 316, 318, 320, 322
226400 90
226861 ..... 64, 68
226926 90
226927 90
226941 ..... 70, 72, 74, 78, 82, 86
226983 ..... 70, 72, 74, 78, 82, 86
227656 30
227747 30
227914 ..... 30, 32
228292 ..... 116, 120, 124, 126
228299 ..... 116, 120
228301 ..... 116, 120, 126
228302 124
228316 ..... 132, 304, 306
228319 ..... 128, 302, 306
228322 114
228338 ..... 100, 102
228381 ..... 104, 106, 108, 110, 112
228382 ..... 120, 126
228384 ..... 120, 126
228385 ..... 120, 126
228460 ..... 116, 120
228470 ..... 240, 242, 244
228471 242
228473 ..... 240, 244
228477 ..... 116, 120
228478 ..... 116, 120
228479 ..... 116, 120
228485 ..... 116, 120
228604 ..... 116, 120
228611 ..... 116, 120
228614 116
228619 120
228848 120
229064 52
229340 48
230483 ..... 284, 326
230968 ..... 284, 326
231368 416
231448 396
231765 422
231766 422
232219 ..... 174, 176
232233 ..... 166, 170, 174, 176, 204, 206
232395 ..... 174, 176, 178, 180, 182, 186, 188, 192, 196, 198
232397 ..... 166, 170, 174, 176, 204, 206
232405 ..... 204, 206
232676 236
232762 312
232806 154
233371 ..... 346, 350
233443 ..... 348, 352
233445 ..... 348, 352
233446 ..... 348, 352
233447 ..... 348, 352
233450 ..... 346, 350
233513 ..... 346, 350
233514 ..... 348, 352
233516 352

233519 346
233552 350
233621 ..... 348, 352
233622 ..... 348, 352
233623 ..... 348, 352
233625 ..... 348, 352
233635 314
233654 348
233655 348
233656 348
233657 348
233658 348
233659 348
233660 348
233661 348
233662 350
233663 352
233664 350
233665 352
233668 350
233669 350
233705 ..... 348, 350
233706 ..... 348, 352
233724 ..... 346, 350
233725 ..... 346, 350
233736 346
233738 346
233740 350
233741 350
233748 274
233770 274
233799 314
233800 314
233841 290
233870 262
233874 262
233891 ..... 270, 272
233900 ..... 270, 272
233906 ..... 270, 272
233912 234
233913 234
233914 234
233920 264
233950 ..... 270, 272
233960 262
233964 ..... 270, 272
233975 264
233980 262
237316 468
237363 ..... 460, 498
240010 422
240012 422
240013 422
240254 422
240264 422
245093 ..... 248, 250, 252
245158 ..... 346, 350
245246 468
245316 ..... 420, 428
245428 254
245432 254
245433 254
245753 430
245966 396
247222 280
248117 386
248144 392
248145 386
248261 404
248285 388
248348 396
248349 396
248388 392
248538 386
248643 ..... 236, 238
248833 422
248914 422
248960 ..... 448, 484, 492
251879 236
251881 236
252002 ..... 168, 172, 204
252051 ..... 360, 422, 518
252176 154
252179 ..... 336, 344
252187 ..... 390, 392
252188 ..... 390, 392
252236 358
252272 ..... 282, 328, 420
252284 20
252288 392
252291 ..... 360, 422, 518
252292 358
252303 2
252307 ..... 160, 164, 346, 350
252351 366
252365 524
252398 358
252421 ..... 270, 272
252423 92
252462 362
252541 ..... 12, 390, 392
252564 404
252581 ..... 94, 98, 100
252621 ..... 346, 350
252638 388
252639 ..... 126, 394
252650 448
252655 292
252687 ..... 130, 150, 304, 306, 320, 322
252691 ..... 388, 392

252692 424
252693 ..... 470, 474
252694 ..... 462, 500, 512
252701 388
252703 ..... 386, 398, 400, 458, 480, 502, 504, 514
252794 ..... 184, 186, 188, 196, 198
252795 ..... 156, 184, 196, 220, 222
252807 ..... 410, 414
252814 ..... 364, 430
252839 54
252902 ..... 156, 174, 176
252958 278
254183 424
255461 ..... 178, 182, 192, 198
255930 28
257054 92
257089 92
258041 48
258298 48
258318 ..... 410, 414
258326 324
258343 324
258346 48
258373 50
258383 2
258384 48
258391 ..... 50, 262, 266, 290
258399 48
258454 332
258458 332
258481 48
258582 48
258585 48
258586 50
258601 50
258602 50
258622 48
258627 48
258637 2
258703 ..... 410, 414
258732 324
258740 48
258757 48
258758 50
258761 50
258791 50
258815 48
258817 48
258822 48
258823 48
258829 48
258831 48
258835 2
258837 54
258843 2
258846 50
258849 48
258850 48
258876 ..... 320, 322, 410, 414
258893 60
258901 48
258905 48
258932 60
258940 48
258953 48
258963 48
258969 48
258980 50
258986 48
258997 56
258998 56
266277 2
273032 ..... 240, 242, 244
273052 330
273078 ..... 116, 120
273122 ..... 104, 106, 108, 110, 112
273138 ..... 104, 106, 110, 112
273258 ..... 116, 120
273259 ..... 116, 120
273278 ..... 104, 110, 112
273281 ..... 106, 108
273283 ..... 104, 110
273284 ..... 106, 108, 112, 114
273285 ..... 204, 206
273304 ..... 104, 106, 108, 110, 112
273309 114
273347 ..... 132, 302, 306
273373 132
273375 ..... 134, 136, 138
273376 132
273440 246
273451 310
273452 310
273453 310
273523 ..... 134, 136, 138, 302, 306
273524 ..... 132, 302, 306, 334, 342
273536 ..... 132, 302, 306
273576 122
273594 310
273637 ..... 108, 114
273653 ..... 100, 102
273666 ..... 132, 134, 136, 138
273680 ..... 94, 96, 98
273689 310
273758 ..... 116, 120
273759 124
273760 126
273770 126
273772 114
273777 ..... 104, 106, 108, 110, 112, 114, 334

273787 102
273788 100
273789 100
273790 ..... 94, 96
273791 98
273795 ..... 94, 96, 98
273798 ..... 94, 98
273813 ..... 146, 302
273823 146
273831 ..... 104, 106, 108, 110, 112, 114, 324
273860 ..... 94, 96, 98
273861 ..... 104, 106, 108, 110, 112
273875 ..... 116, 120
273877 128
273907 ..... 116, 120, 310
273926 ..... 116, 120, 124, 126
273963 ..... 116, 120, 310
273968 ..... 150, 302, 306
275199 36
275200 36
275211 30
275232 ..... 30, 32
275265 36
275266 36
275286 ..... 26, 28
275287 ..... 26, 28
275319 ..... 26, 28
275320 ..... 26, 28
275324 30
275332 32
275348 30
275375 30
275404 24
275405 24
275460 26
275461 26
275483 26
275484 26
275504 36
275505 36
275513 36
275514 36
275521 ..... 346, 350
275524 346
275530 346
275532 346
275533 346
275542 ..... 346, 350
275543 ..... 346, 350
275563 ..... 24, 26
275614 346
275623 ..... 24, 26
275624 350
275625 350
275640 38
275641 38
275675 28
275676 28
275688 38
275690 38
275692 350
275770 38
275779 38
275837 26
275860 32
275864 ..... 32, 320, 322
275877 30
275879 30
275902 30
275954 38
275960 38
275965 28
276062 ..... 410, 414
276117 ..... 410, 414
276140 388
276180 388
276183 392
276202 8
276206 388
276326 442
276630 ..... 472, 478
276671 438
276681 422
276770 ..... 410, 414, 516
276790 366
276839 ..... 320, 322, 386
276899 526
276900 526
279011 ..... 448, 454
279012 ..... 448, 454
279034 ..... 448, 454
279035 ..... 448, 454
279228 ..... 470, 474, 484, 492
279528 246
279737 448
283002 90
283008 354
283012 214
283014 212
283015 214
283016 212
283017 212
283018 212
283035 ..... 166, 204
283036 ..... 166, 204
283037 174
283038 174
283039 174
283046 160
283047 160

283048 160
283049 218
283050 218
283051 202
283052 202
283053 182
283055 182
283056 182
283057 ..... 178, 182, 192, 198
283058 ..... 178, 182, 192, 198
283059 ..... 178, 180, 182, 186, 188, 192, 198
283060 178
283061 ..... 346, 350
283062 ..... 346, 350
283063 ..... 160, 164, 166, 170
283065 ..... 160, 164
283066 354
283068 ..... 166, 170
283069 ..... 166, 170
283070 ..... 166, 170, 204
283074 ..... 186, 188
283075 ..... 186, 188
283077 ..... 346, 350
283078 186
283079 186
283080 186
283081 218
283082 218
283091 ..... 174, 204, 206
283092 ..... 204, 206
283096 ..... 180, 186, 188, 198, 208, 212, 214
283097 218
283098 174
283099 174
283102 160
283104 160
283108 174
283109 174
283141 182
283143 182
283144 182
283145 186
283146 186
283147 186
283159 218
283160 218
283161 218
283162 218
283164 202
283172 164
283173 164
283174 164
283175 170
283176 170
283180 182
283182 182
283183 182
283184 188
283185 188
283186 188
283190 222
283191 222
283192 222
283193 222
283194 218
283195 218
283199 202
283200 202
283201 160
283202 ..... 160, 164, 166, 170
283203 166
283204 166
283205 202
283215 ..... 472, 478, 522
283231 160
283232 160
283233 160
283246 178
283247 178
283248 178
283249 178
283251 180
283327 180
283378 ..... 166, 170, 204
283409 160
283410 160
283411 160
283412 ..... 166, 170
283413 ..... 166, 170
283417 ..... 182, 192
283419 ..... 182, 192
283420 ..... 182, 192
283421 ..... 166, 170
283422 ..... 166, 170
283426 166
283427 166
283428 ..... 188, 198
283429 ..... 188, 198
283430 ..... 188, 198
283431 ..... 188, 198
283432 ..... 188, 198
283433 ..... 188, 198
283434 218
283435 218
283436 218
283437 218
283438 ..... 218, 222
283439 ..... 218, 222
283440 170
283441 170

283442 170
283443 170
283447 192
283449 192
283450 192
283451 198
283452 198
283453 198
283456 160
283457 160
283458 160
283459 218
283460 218
283461 202
283462 202
283463 164
283464 164
283465 164
283466 222
283467 222
283468 202
283469 202
283470 202
283471 202
283502 ..... 156, 158
283507 ..... 198, 214
283508 176
283509 176
283555 ..... 346, 350
283560 ..... 218, 222
283561 176
283562 176
283563 176
283564 176
283565 176
283566 176
283567 158
283569 158
283571 ..... 346, 350
283579 354
283773 ..... 208, 212, 214
283776 214
283777 214
283779 262
283783 266
283785 ..... 184, 194, 196
283786 194
283791 ..... 178, 182, 192, 198
283797 ..... 160, 164, 166, 170, 178, 182, 192
283807 ..... 162, 164, 166, 170, 178, 182, 192
283818 ..... 180, 186, 188, 198
283820 ..... 180, 186, 188, 198
283822 192
283823 192
283824 192
283830 214
283831 214
283832 214
283833 214
283836 214
283837 214
283838 214
283839 214
283849 ..... 56, 58, 60, 224, 226, 228
283889 ..... 184, 196
283906 ..... 180, 186, 188, 198
283907 ..... 180, 186, 188, 198
283909 ..... 180, 184, 194
283910 ..... 180, 184, 194
283984 ..... 160, 164, 166, 170
283987 ..... 180, 184, 194, 206
283988 ..... 180, 184, 194, 206
283989 ..... 180, 184, 194, 206
284215 280
284548 280
284549 284
284550 284
284705 ..... 262, 266
284706 ..... 262, 266
284707 ..... 262, 266
284708 ..... 262, 266
284709 ..... 262, 266
284710 ..... 264, 266
286087 90
286089 ..... 90, 92
286257 ..... 62, 64, 66, 68, 320, 322
286315 ..... 62, 64, 316, 320, 322
286316 ..... 62, 64, 316, 320, 322
286317 ..... 64, 296, 322
286318 ..... 62, 66, 68, 294, 318, 320
286319 ..... 62, 64, 66, 68, 294, 296, 318, 320, 322
286320 68
286321 ..... 294, 296
286322 ..... 294, 296
286323 ..... 294, 296
286329 ..... 62, 64, 320, 322
286330 ..... 66, 68, 318
286331 ..... 62, 64, 66, 68, 318, 320, 322
286332 ..... 64, 296, 322
286333 68
286354 90
286362 ..... 76, 78, 82, 86
286363 ..... 76, 78, 82, 86
286440 ..... 70, 72, 76, 78, 82, 86
286445 92
286461 ..... 70, 72, 74, 78, 82, 86, 316, 318, 320, 322
286462 ..... 70, 72, 74, 78, 82, 86
286463 ..... 74, 78, 82, 86
286464 ..... 74, 78, 82, 86
286465 ..... 74, 78, 82, 86

286466 ..... 74, 78, 82, 86
286475 ..... 70, 72, 76, 78, 82, 86, 316, 318, 320, 322
286476 ..... 70, 72, 76, 78, 82, 86, 316, 318, 320, 322
286477 ..... 70, 72, 76, 78, 82, 86, 316, 318, 320, 322
286478 ..... 70, 72, 76, 78, 84, 86
286479 ..... 22, 70, 72, 76, 80, 84, 88, 320, 322
286481 ..... 70, 72, 76, 78, 82, 86, 320, 322
286483 92
286485 92
286486 92
286488 92
286489 92
286490 92
286493 ..... 70, 72, 74, 78, 82, 86
286502 6
286503 6
286562 ..... 70, 72, 74, 78, 82, 86
286563 ..... 74, 78, 82, 86
286564 ..... 70, 72, 82, 86
286565 ..... 72, 74, 78, 82
286566 ..... 70, 72
286567 72
286574 74
286575 ..... 74, 82
286576 78
286578 86
286597 70
286598 72
286599 72
286600 72
286621 ..... 70, 72, 76, 80, 84, 88
286627 ..... 70, 72, 74, 78, 82, 86
286628 ..... 74, 78, 82, 86
286629 ..... 74, 78, 82, 86
286663 64
286664 64
286665 64
286666 64
286667 64
286668 62
286669 62
286670 62
286671 62
286673 68
286674 68
286675 68
286676 68
286677 68
286678 68
286679 66
286680 66
286681 66
286682 66
286683 296
286684 296
286685 296
286686 296
286687 296
286688 296
286689 296
286690 294
286691 294
286692 294
286693 294
286703 90
286705 ..... 62, 64, 66, 68
286725 6
286741 6
286861 ..... 74, 78, 82, 86, 322
286862 ..... 74, 78, 82, 86
286863 ..... 74, 78, 82, 86
286865 74
286866 ..... 74, 78
286867 82
286868 86
286886 74
286887 74
286888 78
286889 82
286890 86
287031 514
287032 514
287449 ..... 266, 424
287450 ..... 266, 424
287451 424
287456 ..... 470, 474
287460 ..... 470, 474
287461 ..... 470, 474
287462 ..... 470, 474
287701 278
287702 442
287705 442
287859 438
287878 448
287887 ..... 398, 400, 514
287888 ..... 398, 400, 514
287889 ..... 400, 504, 514
287890 ..... 400, 504, 514
287939 422
288195 246
288438 2
289220 4
289235 10
289261 4
289341 4
289346 46
289347 46
289349 4
289356 46
289357 46

289358 4
289359 10
289375 20
289380 20
289439 20
289483 20
289487 20
289519 20
289520 20
289618 20
289621 20
289654 12
289742 4
289759 154
289762 246
289763 246
289869 154
289880 ..... 94, 96, 98
289924 20
289925 20
291484 236
291485 236
292692 ..... 278, 326
293053 ..... 360, 410, 414, 516, 518
293054 ..... 360, 518
294098 448
294394 454
295211 422
295212 422
295213 422
295261 ..... 410, 414
295399 420
295407 420
295766 420
295770 420
295853 ..... 420, 428
295927 ..... 424, 434
295929 ..... 184, 194
295992 ..... 410, 414
301034 516
301047 516
301049 516
301065 516
301067 516
301069 516
301126 ..... 410, 414
301127 ..... 410, 414
301318 424
301427 ..... 388, 392, 402
301441 392
301451 452
301513 404
301629 ..... 444, 452, 460, 464, 468, 482, 488, 490, 498, 510
301633 404
301805 396
301806 396
301807 396
301971 370
301992 392
301993 392
301994 388
302030 454
302204 442
303021 280
303033 280
303169 284
303251 ..... 282, 328
303283 282
303341 282
303379 278
303380 280
303486 278
303491 278
303492 ..... 278, 326
303520 326
303525 ..... 278, 326
303691 278
303693 278
303766 278
303832 280
303839 ..... 278, 326
303898 280
303961 278
304040 ..... 410, 414
304494 398
304514 388
304520 388
304521 392
304611 354
304658 360
304668 360
304669 468
304931 392
308056 388
308249 448
308251 448
308252 448
308253 ..... 448, 454
308254 ..... 448, 454
308255 ..... 448, 454
308536 386
308538 388
308648 ..... 388, 392
308658 424
308684 438
308725 ..... 362, 370
308726 ..... 362, 374
308732 362
308740 362

308755 362
308774 416
308848 374
308850 388
308852 374
308853 374
308855 374
308856 374
308859 388
308863 ..... 362, 374
308878 408
308879 408
308941 438
308942 438
308943 438
311038 144
311054 330
311055 330
311068 330
311069 330
311190 128
311193 128
311195 142
311207 128
311210 ..... 128, 302
311233 ..... 162, 164, 166, 170, 178, 182, 192
311237 ..... 104, 106, 110, 112
311238 ..... 104, 106, 110, 112
311284 102
311285 ..... 94, 96
311303 128
311306 ..... 128, 302
311318 238
311321 330
311322 330
311325 ..... 128, 302, 306
311327 ..... 128, 302, 306
311347 ..... 302, 306
311354 ..... 180, 184, 194
311359 ..... 108, 114
311360 ..... 180, 186, 188, 198
311365 ..... 128, 302, 306
311368 ..... 128, 306
311405 128
311408 128
311451 ..... 180, 186, 188, 198
311461 ..... 180, 184, 194
311462 ..... 180, 186, 188, 198
311464 276
311493 246
311523 ..... 128, 302, 306, 320, 322
311524 150
311611 ..... 94, 98, 100
311612 ..... 94, 98
311613 ..... 94, 98, 100
311615 ..... 132, 302, 306
311617 ..... 132, 302, 306
311620 ..... 116, 120
311627 ..... 94, 98
311632 114
311643 ..... 142, 144
311644 ..... 142, 144
311645 ..... 142, 144
311646 ..... 142, 144
311647 142
311648 142
311658 142
311672 ..... 132, 302, 306
311675 128
311676 128
311694 148
311695 152
311724 126
311729 ..... 148, 302, 306
311745 128
311746 128
311752 ..... 148, 302
311753 ..... 152, 302
311789 316
311790 318
311795 150
311822 ..... 150, 302
311863 306
311864 306
311868 306
311870 306
311882 310
311906 ..... 146, 302, 306
311949 102
311964 ..... 146, 148, 302, 306
311965 ..... 152, 302, 306
312134 ..... 208, 212, 214
312654 ..... 162, 164, 166, 170, 178, 180, 182, 186, 188, 192, 198
312655 ..... 180, 184, 186, 188, 194, 198
312673 300
312675 154
312680 154
312704 2
312777 154
312824 520
313007 266
313011 262
313012 262
313020 262
313035 ..... 148, 152
313064 234
313114 ..... 262, 266
313192 234
313303 ..... 20, 288

313304 ..... 20, 288
313366 ..... 262, 266
313368 ..... 262, 266
313374 300
313406 278
313421 248
313422 248
313425 278
313432 ..... 20, 288
313441 264
313461 290
313496 ..... 208, 212, 214
313497 ..... 208, 212, 214
313499 ..... 208, 212, 214
313500 ..... 208, 212, 214
313501 ..... 354, 356
313502 ..... 354, 356
313510 246
313511 ..... 208, 212, 214
313523 208
313524 208
313525 208
313526 208
313529 214
313530 214
313541 248
313542 248
313543 248
313544 248
313545 248
313546 248
313547 248
313548 248
313549 248
313550 248
313551 248
313552 248
313554 248
313555 248
313556 214
313557 214
313566 276
313574 248
313575 248
313580 248
313581 248
313643 234
313705 276
313725 246
313728 442
313729 246
313730 246
313733 246
313734 ..... 6, 424
313744 354
313745 354
313748 266
313749 354
313750 354
313753 266
313767 10
313776 266
313777 266
313780 354
313783 ..... 20, 288
313787 246
313788 354
313789 354
313790 354
313791 266
313792 266
313793 262
313794 ..... 98, 262
313797 354
313798 356
313799 356
313800 356
313801 354
313802 356
313803 356
313804 356
313805 356
313806 356
313807 356
313808 354
313809 356
313810 356
313811 356
313812 356
313813 356
313814 356
313815 356
313816 356
313817 356
313818 356
313819 356
313820 356
313821 356
313822 356
313824 356
313825 356
313826 356
313827 356
313828 356
313829 356
313830 356
313831 356
313832 358
313833 356
313834 356

313835 356
313836 356
313837 356
313838 356
313839 358
313841 356
313843 358
313844 358
313845 358
313846 358
313847 358
313848 358
313849 358
313859 ..... 262, 266
313869 356
313882 356
313883 356
313884 356
313913 262
313914 262
313920 246
313921 262
313922 262
313940 234
313964 ..... 104, 106, 108, 110, 112, 114
313965 154
314062 386
314076 438
314082 370
314136 ..... 388, 392
314169 ..... 388, 392
314173 378
314174 378
314276 404
314292 424
314389 430
314391 432
314392 432
314394 432
314395 428
314396 428
314397 424
314399 424
314401 432
314402 430
314416 424
314417 424
314419 516
314420 516
314474 420
314537 430
314581 ..... 264, 298
314585 ..... 462, 500, 512
314586 ..... 462, 500, 512
314587 ..... 462, 500, 512
314588 ..... 462, 500, 512
314591 434
314592 434
314593 434
314594 434
314595 434
314605 434
314606 434
314645 424
314657 384
314671 516
314678 452
314680 506
314697 434
314706 ..... 484, 492
314707 ..... 484, 492
314708 ..... 484, 492
314817 ..... 470, 474
314819 ..... 470, 474
314820 ..... 470, 474
314821 ..... 470, 474
314928 360
316044 280
316095 ..... 278, 326
316096 ..... 278, 326
316110 278
316118 278
316119 278
316284 ..... 278, 326
316293 280
316330 ..... 280, 326
316358 278
316639 282
316649 282
316662 328
316793 ..... 280, 326
316794 278
316847 ..... 280, 326
316848 ..... 280, 326
316851 ..... 280, 326
316859 ..... 282, 328
316860 ..... 282, 328
316904 284
319051 30
319088 22
319095 ..... 22, 320, 322
319099 22
319100 22
319101 22
319102 22
319103 22
319104 22
319105 ..... 22, 320, 322
319180 ..... 40, 42, 44
319191 32

319222 ..... 24, 26, 28
319223 ..... 24, 26, 28
319225 ..... 34, 36, 38
319228 36
319229 ..... 40, 42, 44
319230 ..... 42, 44
319231 ..... 40, 42, 44
319265 32
319287 38
319345 22
319346 22
319347 22
319366 ..... 24, 26, 28
319376 36
319377 ..... 36, 38
319378 ..... 36, 38
319394 ..... 24, 26
319403 28
319404 28
319474 50
319508 48
319509 48
319540 22
319542 50
319548 60
319549 60
319550 60
319563 60
319564 60
319583 32
319587 34
319588 34
319662 22
319707 30
319708 30
320011 ..... 282, 328
320026 90
320039 284
320060 ..... 282, 328
320089 90
320108 50
320109 50
320110 50
320122 264
320148 ..... 22, 56, 58, 60
320154 282
320160 50
320161 52
320167 ..... 30, 50
320168 ..... 94, 98, 100
320169 2
320171 2
320175 ..... 132, 304, 306
320176 ..... 286, 410, 414
320179 132
320180 ..... 116, 122, 124, 126, 132, 134, 136, 138, 146, 148, 304, 306, 376
320181 ..... 24, 26, 28
320182 32
320187 ..... 130, 304, 306
320190 ..... 26, 28, 40, 42, 44, 54, 56, 58, 60, 292, 336
320192 ..... 130, 304, 306, 310
320195 ..... 470, 474
320196 ..... 94, 96, 98
320199 52
320205 ..... 280, 284, 334
320206 ..... 30, 32
320207 ..... 104, 106, 108, 110, 112, 114
320208 286
320213 284
320214 90
320215 90
320218 ..... 10, 270, 272
320219 286
320220 ..... 292, 354
320236 50
320246 ..... 56, 58, 60
320248 234
320251 52
320259 402
320274 174
320284 ..... 470, 474, 484, 492
320290 ..... 24, 26, 28, 34, 36, 38
320304 4
320311 90
320327 20
320331 266
320336 ..... 56, 58, 60, 224, 226, 228
320358 ..... 416, 420
320360 ..... 316, 318, 320, 322, 362
320388 360
320389 404
320390 ..... 272, 404
320392 492
320397 360
320404 292
320409 272
320410 272
320418 362
320441 ..... 334, 342
320448 ..... 40, 42, 44, 56, 58, 60, 224, 226, 228
322022 424
322046 404
322114 378
322132 404
322142 366
322148 ..... 364, 366
322149 366
322157 366
322158 366

322160 366
322161 366
322192 370
322193 370
322195 370
322197 370
322216 ..... 484, 492
322219 404
322256 432
322372 386
322377 392
322383 ..... 436, 478
322384 ..... 462, 500
322386 448
322387 486
322388 438
322397 386
322409 370
322456 378
322486 378
322555 418
322557 404
322668 408
322676 ..... 410, 414
322695 466
322750 516
322770 386
322870 360
322872 360
322914 ..... 396, 518
322915 378
322916 378
322917 378
322918 378
322924 378
322925 378
322926 378
322930 378
322931 378
322961 402
322962 402
322970 ..... 100, 396
322981 404
322996 380
322997 380
322998 380
323003 ..... 220, 222
323023 ..... 180, 184, 194
323032 ..... 56, 58, 60
323049 278
323051 ..... 56, 58, 60
323082 54
323083 54
323086 54
323087 54
323130 ..... 230, 232
323145 ..... 230, 232
323157 58
323158 58
323164 ..... 224, 226, 228
323165 228
323166 ..... 226, 228
323169 ..... 226, 228
323172 ..... 226, 228
323207 232
323208 232
323209 232
323210 232
323211 232
323212 232
323343 180
323344 180
323345 180
323346 204
323347 204
323348 204
323349 204
323350 208
323351 208
323352 208
323353 208
323355 202
323356 180
323361 212
323362 212
323381 230
323383 466
323384 466
323385 466
323386 466
323387 466
323428 ..... 204, 206
323429 ..... 204, 206
323478 266
323499 272
323516 246
323519 204
323659 184
323660 184
323661 184
323662 206
323663 184
323664 196
323665 194
323666 194
323667 206
323668 196
323669 196
323670 194
323671 196

323672 196
323673 194
323674 196
323687 100
323688 100
323694 272
323698 496
323718 232
323772 ..... 224, 226, 228
323773 ..... 56, 58, 60, 224
323795 ..... 224, 226, 228
323808 206
323826 218
323827 218
323828 218
323829 218
327086 ..... 282, 326
327089 ..... 280, 326
327179 278
327255 278
327294 284
327304 284
327428 278
327429 278
327532 284
327534 280
327535 280
327561 278
327563 284
327588 286
327600 ..... 282, 326
327649 284
327655 326
327656 326
327659 284
327664 284
327672 280
327680 284
327682 326
327692 284
327694 284
327695 284
327696 284
327704 278
327710 282
327716 280
327717 ..... 284, 326
327738 280
327739 284
327740 284
327745 280
327749 280
327751 280
327755 278
327756 278
327771 284
327786 280
328002 ..... 484, 492
328065 ..... 478, 522
328085 506
328089 436
328120 374
328128 420
328133 404
328142 442
328143 420
328152 ..... 370, 374
328154 ..... 370, 374
328156 ..... 372, 376
328157 370
328158 372
328159 372
328160 370
328161 370
328162 370
328164 370
328165 370
328174 370
328175 370
328176 ..... 370, 374
328178 366
328181 370
328183 376
328184 370
328185 370
328186 370
328187 370
328188 370
328197 374
328198 374
328199 374
328200 374
328201 374
328202 374
328203 374
328261 366
328262 ..... 364, 366
328269 366
328283 366
328284 366
328288 366
328290 366
328291 366
328292 366
328293 366
328306 366
328307 366
328308 366
328309 366
328310 366

328311 366
328312 366
328313 366
328316 362
328318 436
328329 ..... 242, 244
328348 ..... 410, 414, 516
328349 ..... 410, 414, 516
328370 362
328371 362
328411 ..... 436, 478
328412 ..... 272, 404
328420 386
328440 ..... 478, 522
328491 404
328532 238
328534 238
328538 404
328539 238
328547 238
328548 ..... 470, 474
328549 438
328550 438
328551 438
328552 438
328553 438
328554 438
328555 438
328556 238
328560 436
328561 438
328562 442
328565 442
328582 468
328662 ..... 240, 242, 244
328713 362
328756 446
328758 446
328760 446
328763 446
328872 448
328874 ..... 462, 500, 512
328887 454
328908 454
328913 ..... 478, 522, 524
328924 378
328968 454
330622 50
335008 454
335133 434
335144 404
335160 508
335161 508
335287 438
335301 ..... 12, 290
335342 ..... 484, 492
335431 ..... 472, 478
335563 298
335564 298
335663 466
335851 48
335887 432
335891 422
335912 422
335924 ..... 132, 302, 306
337043 468
337117 384
337124 388
337143 ..... 398, 400, 458, 480, 502
337152 ..... 320, 322, 386, 400, 458, 480, 502
337206 386
337276 392
337284 ..... 388, 392
337311 468
337352 ..... 478, 522
337353 524
337362 396
337366 396
337407 ..... 410, 414
337427 368
337429 368
337430 368
337431 368
337432 368
337433 368
337440 366
337441 366
337456 ..... 410, 414
337457 ..... 410, 414
337463 ..... 410, 414
337464 ..... 410, 414
337551 ..... 494, 524
337611 438
337617 438
337618 438
337619 440
337627 440
337631 524
337634 404
337635 404
337636 404
337651 ..... 486, 494
337652 ..... 486, 494
337667 374
337707 380
337709 380
337711 380
337712 380
337713 ..... 362, 374
337715 380

337716 380
337717 380
337718 380
337720 380
337721 380
337722 380
337723 380
337725 380
337727 380
337729 380
337730 380
337731 380
337732 380
337770 366
337773 366
337774 ..... 362, 364, 366
337777 506
337778 506
337779 506
337780 506
337804 392
337806 524
337821 404
337823 366
337862 444
337863 444
337980 454
337981 454
340049 254
340050 260
340051 256
340052 258
340076 358
340077 358
340078 358
340095 312
340096 312
340111 20
340113 4
340122 4
340125 ..... 410, 414
340131 442
340132 442
340146 ..... 132, 302, 306
340164 246
340183 238
340191 ..... 100, 102
340193 4
340210 290
340212 290
340215 4
340216 120
340218 238
340224 ..... 104, 106, 108, 110, 112
340289 272
340304 248
340305 248
340306 4
340318 4
340492 320
340493 322
340571 108
340648 100
340672 50
340681 ..... 34, 36, 38
340683 224
340714 20
340841 ..... 34, 36, 38
340897 48
340954 272
340955 272
340956 272
347001 ..... 362, 374
347077 468
347141 ..... 460, 498
347179 482
347180 482
347185 362
347300 ..... 460, 498
347301 482
347342 442
347349 370
347376 490
347405 370
347410 370
347416 370
347417 370
347431 444
347480 444
347483 420
347487 420
347498 510
347500 414
347502 496
347532 510
347553 420
347560 496
347630 512
347665 416
347691 422
347692 422
347722 384
347731 464
347775 414
347778 414
347796 466
347923 404
347949 424
347954 ..... 470, 474
347963 410

347964 464
347965 464
347969 .....432, 434
347975 370
347976 372
347977 372
347978 370
351371 488
352001 272
352163 272
357012 380
357046 496
357047 496
357050 496
357051 496
357052 496
357053 496
357054 496
357064 380
357089 490
357119 .....478, 522
357173 .....360, 518
357174 .....360, 518
357195 .....444, 452, 460, 464, 468, 482, 488, 490, 498, 510
357233 400
357234 400
357386 416
357455 404
357492 404
357512 .....360, 518
360004 290
360035 100
360069 290
360072 290
360076 290
360077 290
360079 290
360081 290
360095 290
360103 290
360105 292
360106 290
360108 290
360110 290
360114 290
360119 290
360120 290
360122 290
360127 12
360134 290
360144 116
360150 36
360151 ..... 36, 38
360168 290
360175 6
360176 6
360186 116
360199 128
360201 128
360299 ..... 56, 58, 60
360358 ..... 262, 270, 272
360361 4
360376 140
360391 250
360392 250
360393 250
360394 250
360395 250
360396 250
360397 250
360398 250
360399 250
360400 250
360401 250
360402 250
360403 250
360404 250
360405 252
360406 252
360407 252
360408 252
360409 252
360410 252
360411 252
360419 250
360420 250
360421 252
360422 252
360446 252
360447 252
360448 ..... 16, 288
360449 ..... 18, 288
360452 262
360509 ..... 26, 28
360526 .....270, 272
360540 ..... 128, 302, 306, 320, 322
360541 246
360551 .....270, 272
360552 ..... 16, 288
360553 ..... 18, 288
360554 ..... 14, 288
360555 ..... 14, 288
360559 .....270, 272
360655 442
360716 442
500321 .....240, 242, 244
500448 508
500461 524
500465 524

500518 496

B

B6042..... 526
B6043..... 526
B6044..... 526
B6045..... 526
B6046..... 526
B6057..... 520
B6213..... 526
B6275.....284, 326
B6288..... 278
B6400..... 514
B6413..... 346
B6414..... 346
B6415..... 346
B6416..... 346
B6417..... 350
B6418..... 350
B6419..... 350
B6460..... 326
B6801..... 300
B7022..... 274
B7023..... 274
B7027..... 332
B7028..... 324
B7029..... 354
B7030..... 276
B7031..... 516
B7038..... 378
B7039..... 378
B7040..... 298
B7041..... 374
B7042..... 374
B7043.....460, 498
B7044..... 482
B7045..... 468
B7046..... 506
B7056.....462, 500
B7057..... 484
B7058..... 470
B7064..... 242
B7065..... 240
B7082..... 208
B7083..... 212
B7107..... 452
B7108..... 378
B7109..... 454
B7111..... 374
B7113..... 214
B7114..... 214
B7116..... 214
B7117..... 202
B7118..... 202
B7119..... 202
B7120..... 202
B7121..... 202
B7122..... 314
B7123..... 314
B7127..... 218
B7128..... 218
B7130..... 218
B7131..... 222
B7155..... 316
B7156..... 318
B7165..... 448
B7180..... 380
B7181..... 380
B7182..... 380
B7193..... 214
B7195..... 218
B7196..... 436
B7231..... 522
B7237..... 524
B7238..... 312
B7241..... 508
B7287..... 490
B7302.....334, 338
B7303..... 344
B7304..... 340
B7305..... 340
B7306..... 340
B7307..... 342
B7308..... 374
B7311..... 510
B7312..... 384
B7313..... 444
B7314..... 446
B7315..... 464
B7316..... 466
B7317..... 384
B7323.....492, 496
B7326..... 380
B7338..... 202
B7339..... 218
B7340..... 208
B7341..... 488
B7342..... 518
B7343..... 400
B7344..... 400
B7345..... 400
B7346..... 290
B7350..... 272
B7357..... 302
B7358..... 302
B7359..... 302
B7362..... 306
B7365..... 320
B7366..... 322

B7389.....262, 266
B7391..... 284
B7392..... 284
B7395..... 342
B7396..... 342
B7401..... 288
B7402..... 288
B7403..... 288
B7405..... 478
B7406..... 474
B7407..... 512
B7408..... 244

C

C2051..... 326
C2086..... 334
C2087..... 334
C2088..... 334
C2089..... 334
C2169..... 334
C2170..... 334

MacDon

CUSTOMERS
MacDon.com

DEALERS
Portal.MacDon.com

Trademarks of products are the marks of their respective manufacturers and/or distributors.

Printed in Canada