MacDon

M1240
Windrower

Operator's Manual

214905 Revision A

Original Instruction

The harvesting specialists.

This manual contains instructions for safety, operation, maintenance, and service for the MacDon M1240 Windrower, featuring Dual Direction® and CrossFlex™ rear suspension.



Published March 2019

California Proposition 65 Warning

Diesel engine exhaust and some of its constituents are known to the State of California to cause cancer, birth defects, and other reproductive harm. Battery posts, terminals, and related accessories contain lead and lead components. Wash hands after handling.

Whole Body and Hand-Arm Vibration Levels

The weighted root mean square acceleration, to which the whole body is subjected, ranges from 0.46 to 1.52 m/s^2 as measured on a representative machine during typical operations and analyzed in accordance with ISO 5008.

During the same operations, the weighted root means square hand-arm vibration was less than 1.79 m/s^2 when analyzed in accordance with ISO 5349. These acceleration values depend on the ground roughness, operating speed, and the operator's experience, weight, and driving habits.

Noise Levels

The A-weighted sound pressure levels inside the operator's station ranged from 69.3 to 69.7 dB(A) as measured on several representative machines in accordance with ISO 5131. The sound pressure level depends upon the engine speed and load, field and crop conditions, and the type of platform used.

Declaration of Conformity

CE

EC Declaration of Conformity

[1] MacDon

MacDon Industries Ltd.
680 Moray Street,
Winnipeg, Manitoba, Canada
R3J 3S3

[2] Windrower

[3] MacDon M1240

[4] As Per Shipping Document

[5] February 11, 2019

[6] _____
Christoph Martens
Product Integrity

EN

We, [1]

Declare, that the product:

Machine Type: [2]

Name & Model: [3]

Serial Number(s): [4]

fulfils all the relevant provisions of the Directive 2006/42/EC.

Harmonized standards used, as referred to in Article 7(2):

EN ISO 4254-1:2013
EN ISO 4254-7:2009

Place and date of declaration: [5]

Identity and signature of the person empowered to draw up the declaration: [6]

Name and address of the person authorized to compile the technical file:

Benedikt von Riedesel
General Manager, MacDon Europe GmbH
Hagenauer Straße 59
65203 Wiesbaden (Germany)
bvonriedesel@macdon.com

BG

Ние, [1]

декларираме, че следният продукт:

Тип машина: [2]

Наименование и модел: [3]

Сериен номер(а) [4]

отговаря на всички приложими разпоредби на директива 2006/42/ЕО.

Използвани са следните хармонизирани стандарти според чл. 7(2):

EN ISO 4254-1:2013
EN ISO 4254-7:2009

Място и дата на декларацията: [5]

Име и подпис на лицето, упълномощено да изготви декларацията: [6]

Име и адрес на лицето, упълномощено да състави техническия файл:

Бенедикт фон Рийдезел
Управител, MacDon Europe GmbH
Hagenauer Straße 59
65203 Wiesbaden (Германия)
bvonriedesel@macdon.com

CZ

My, [1]

Prohlašujeme, že produkt:

Typ zařízení: [2]

Název a model: [3]

Sériové(á) číslo)a): [4]

splňuje všechna relevantní ustanovení směrnice 2006/42/EC.

Byly použity harmonizované standardy, jak je uvedeno v článku 7(2):

EN ISO 4254-1:2013
EN ISO 4254-7:2009

Místo a datum prohlášení: [5]

Identita a podpis osoby oprávněné k vydání prohlášení: [6]

Jméno a adresa osoby oprávněné k vyplnění technického souboru:

Benedikt von Riedesel
generální ředitel, MacDon Europe GmbH
Hagenauer Straße 59
65203 Wiesbaden (Německo)
bvonriedesel@macdon.com

DA

Vi, [1]

erklærer, at prduktet:

Maskintype [2]

Navn og model: [3]

Serienummer (-numre): [4]

Opfylder alle bestemmelser i direktiv 2006/42/EF.

Anvendte harmoniserede standarder, som henvist til i paragraf 7(2):

EN ISO 4254-1:2013
EN ISO 4254-7:2009

Sted og dato for erklæringen: [5]

Identitet på og underskrift fra den person, som er bemyndiget til at udarbejde erklæringen: [6]

Navn og adresse på den person, som er bemyndiget til at udarbejde den tekniske fil:

Benedikt von Riedesel
Direktør, MacDon Europe GmbH
Hagenauer Straße 59
D-65203 Wiesbaden (Tyskland)
bvonriedesel@macdon.com

DE

Wir, [1]

Erklären hiermit, dass das Produkt:

Maschinentyp: [2]

Name & Modell: [3]

Seriennummer (n): [4]

alle relevanten Vorschriften der Richtlinie 2006/42/EG erfüllt.

Harmonisierte Standards wurden, wie in folgenden Artikeln angegeben, verwendet 7(2):

EN ISO 4254-1:2013
EN ISO 4254-7:2009

Ort und Datum der Erklärung: [5]

Name und Unterschrift der Person, die dazu befugt ist, die Erklärung auszustellen: [6]

Name und Anschrift der Person, die dazu berechtigt ist, die technischen Unterlagen zu erstellen:

Benedikt von Riedesel
General Manager, MacDon Europe GmbH
Hagenauer Straße 59
65203 Wiesbaden
bvonriedesel@macdon.com

ES

Nosotros [1]

declaramos que el producto:

Tipo de máquina: [2]

Nombre y modelo: [3]

Números de serie: [4]

cumple con todas las disposiciones pertinentes de la directriz 2006/42/EC.

Se utilizaron normas armonizadas, según lo dispuesto en el artículo 7(2):

EN ISO 4254-1:2013
EN ISO 4254-7:2009

Lugar y fecha de la declaración: [5]

Identidad y firma de la persona facultada para draw redactar la declaración: [6]

Nombre y dirección de la persona autorizada para elaborar el expediente técnico:

Benedikt von Riedesel
Gerente general - MacDon Europe GmbH
Hagenauer Straße 59
65203 Wiesbaden (Alemania)
bvonriedesel@macdon.com

ET

Meie, [1]

deklareerime, et toode

Seadme tüüp: [2]

Nimi ja mudel: [3]

Seerianumbrid: [4]

vastab kõigile direktiivi 2006/42/EÜ asjakohastele sätetele.

Kasutatud on järgnevaid harmoniseeritud standardeid, millele on viidatud ka punktis 7(2):

EN ISO 4254-1:2013
EN ISO 4254-7:2009

Deklaratsiooni koht ja kuupäev: [5]

Deklaratsiooni koostamiseks volitatud isiku nimi ja allkiri: [6]

Tehnilise dokumendi koostamiseks volitatud isiku nimi ja aadress:

Benedikt von Riedesel
Peadirektor, MacDon Europe GmbH
Hagenauer Straße 59
65203 Wiesbaden (Saksamaa)
bvonriedesel@macdon.com

FR

Nous soussignés, [1]

Déclarons que le produit :

Type de machine : [2]

Nom et modèle : [3]

Numéro(s) de série : [4]

Est conforme à toutes les dispositions pertinentes de la directive 2006/42/EC.

Utilisation des normes harmonisées, comme indiqué dans l'Article 7(2):

EN ISO 4254-1:2013
EN ISO 4254-7:2009

Lieu et date de la déclaration : [5]

Identité et signature de la personne ayant reçu le pouvoir de rédiger cette déclaration : [6]

Nom et adresse de la personne autorisée à constituer le dossier technique :

Benedikt von Riedesel
Directeur général, MacDon Europe GmbH
Hagenauer Straße 59
65203 Wiesbaden (Allemagne)
bvonriedesel@macdon.com

The Harvesting Specialists

MacDon

1028132

EC Declaration of Conformity

IT

Noi, [1]

Dichiariamo che il prodotto:

Tipo di macchina: [2]

Nome e modello: [3]

Numero(i) di serie: [4]

soddisfa tutte le disposizioni rilevanti della direttiva 2006/42/CE.

Utilizzo degli standard armonizzati, come indicato nell'Articolo 7(2):

EN ISO 4254-1:2013

EN ISO 4254-7:2009

Luogo e data della dichiarazione: [5]

Nome e firma della persona autorizzata a redigere la dichiarazione: [6]

Nome e persona autorizzata a compilare il file tecnico:

Benedikt von Riedesel
General Manager, MacDon Europe GmbH
Hagenauer Straße 59
65203 Wiesbaden (Germania)
bvonriedesel@macdon.com

HU

Mi, [1]

Ezennel kijelentjük, hogy a következő termék:

Gép típusa: [2]

Név és modell: [3]

Szériaszám(ok): [4]

teljesíti a következő irányelv összes vonatkozó előírásait: 2006/42/EK.

Az alábbi harmonizált szabványok kerültek alkalmazásra a 7(2) cikkely szerint:

EN ISO 4254-1:2013

EN ISO 4254-7:2009

A nyilatkozattétel ideje és helye: [5]

Azon személy kiléte és aláírása, aki jogosult a nyilatkozat elkészítésére: [6]

Azon személy neve és aláírása, aki felhatalmazott a műszaki dokumentáció összeállítására:

Benedikt von Riedesel
Vezérigazgató, MacDon Europe GmbH
Hagenauer Straße 59
65203 Wiesbaden (Németország)
bvonriedesel@macdon.com

LT

Mes, [1]

Pareiškiame, kad šis produktas:

Mašinos tipas: [2]

Pavadinimas ir modelis: [3]

Serijos numeris (-iai): [4]

atitinka taikomus reikalavimus pagal Direktyvą 2006/42/EB.

Naudojami harmonizuoti standartai, kai nurodoma straipsnyje 7(2):

EN ISO 4254-1:2013

EN ISO 4254-7:2009

Deklaracijos vieta ir data: [5]

Asmens tapatybės duomenys ir parašas asmens, įgalioto sudaryti šią deklaraciją: [6]

Vardas ir pavardė asmens, kuris įgaliotas sudaryti šį techninį failą:

Benedikt von Riedesel
Generalinis direktorius, MacDon Europe GmbH
Hagenauer Straße 59
65203 Wiesbaden (Vokietija)
bvonriedesel@macdon.com

LV

Mēs, [1]

Deklarējam, ka produkts:

Mašīnas tips: [2]

Nosaukums un modelis: [3]

Sērijas numurs(-i): [4]

Atbilst visām būtiskajām Direktīvas 2006/42/EK prasībām.

Piemēroti šādi saskaņotie standarti , kā minēts 7. panta 2. punktā:

EN ISO 4254-1:2013

EN ISO 4254-7:2009

Deklarācijas parakstīšanas vieta un datums: [5]

Tās personas vārds, uzvārds un paraksts, kas ir pilnvarota sagatavot šo deklarāciju: [6]

Tās personas vārds, uzvārds un adrese, kas ir pilnvarota sastādīt tehnisko dokumentāciju:

Benedikts fon Rīdzels
Ģenerāldirektors, MacDon Europe GmbH
Hagenauer Straße 59
65203 Wiesbaden (Vācija)
bvonriedesel@macdon.com

NL

Wij, [1]

Verklaren dat het product:

Machinetype: [2]

Naam en model: [3]

Serienummer(s): [4]

voldoet aan alle relevante bepalingen van de Richtlijn 2006/42/EC.

Geharmoniseerde normen toegepast, zoals vermeld in Artikel 7(2):

EN ISO 4254-1:2013

EN ISO 4254-7:2009

Plaats en datum van verklaring: [5]

Naam en handtekening van de bevoegde persoon om de verklaring op te stellen: [6]

Naam en adres van de geautoriseerde persoon om het technisch dossier samen te stellen:

Benedikt von Riedesel
Algemeen directeur, MacDon Europe GmbH
Hagenauer Straße 59
65203 Wiesbaden (Duitsland)
bvonriedesel@macdon.com

PO

My niżej podpisani, [1]

Oświadczamy, że produkt:

Typ urządzenia: [2]

Nazwa i model: [3]

Numer seryjny/numery seryjne: [4]

spełnia wszystkie odpowiednie przepisy dyrektywy 2006/42/WE.

Zastosowaliśmy następujące (zharmonizowane) normy zgodnie z artykułem 7(2):

EN ISO 4254-1:2013

EN ISO 4254-7:2009

Data i miejsce oświadczenia: [5]

Imię i nazwisko oraz podpis osoby upoważnionej do przygotowania deklaracji: [6]

Imię i nazwisko oraz adres osoby upoważnionej do przygotowania dokumentacji technicznej:

Benedikt von Riedesel
Dyrektor generalny, MacDon Europe GmbH
Hagenauer Straße 59
65203 Wiesbaden (Niemcy)
bvonriedesel@macdon.com

PT

Nós, [1]

Declaramos, que o produto:

Tipo de máquina: [2]

Nome e Modelo: [3]

Número(s) de Série: [4]

cumpre todas as disposições relevantes da Directiva 2006/42/CE.

Normas harmonizadas aplicadas, conforme referido no Artigo 7(2):

EN ISO 4254-1:2013

EN ISO 4254-7:2009

Local e data da declaração: [5]

Identidade e assinatura da pessoa autorizada a elaborar a declaração: [6]

Nome e endereço da pessoa autorizada a compilar o ficheiro técnico:

Benedikt von Riedesel
Gerente Geral, MacDon Europa Ltda.
Hagenauer Straße 59
65203 Wiesbaden (Alemanha)
bvonriedesel@macdon.com

RO

Noi, [1]

Declarăm, că următorul produs:

Tipul maşinii: [2]

Denumirea şi modelul: [3]

Număr (numere) serie: [4]

corespunde tuturor dispoziţiilor esenţiale ale directivei 2006/42/EC.

Au fost aplicate următoarele standarde armonizate conform articolului 7(2):

EN ISO 4254-1:2013

EN ISO 4254-7:2009

Data şi locul declaraţiei: [5]

Identitatea şi semnătura persoanei împuternicite pentru întocmirea declaraţiei: [6]

Numele şi semnătura persoanei autorizate pentru întocmirea cărţii tehnice:

Benedikt von Riedesel
Manager General, MacDon Europe GmbH
Hagenauer Straße 59
65203 Wiesbaden (Germania)
bvonriedesel@macdon.com

SR

Mi, [1]

Izjavljujemo da proizvod

Tip mašine: [2]

Naziv i model: [3]

Serijski broj(evi): [4]

Ispunjava sve relevantne odredbe direktive 2006/42/EC.

Korišæeni su usklađeni standardi kao što je navedeno u èlanu 7(2):

EN ISO 4254-1:2013

EN ISO 4254-7:2009

Datum i mesto izdavanja deklaracije: [5]

Identitet i potpis lica ovlašæenog za sastavljanje deklaracije: [6]

Ime i adresa osobe ovlašæene za sastavljanje tehnièke datoteke:

Benedikt von Riedesel
Generalni direktor, MacDon Europe GmbH
Hagenauer Straße 59
65203 Wiesbaden (Nemačka)
bvonriedesel@macdon.com

SV

Vi, [1]

Intygar att produkten:

Maskintyp: [2]

Namn och modell: [3]

Serienummer: [4]

uppfyller alla relevanta villkor i direktivet 2006/42/EG.

Harmonierade standarder används, såsom anges i artikel 7(2):

EN ISO 4254-1:2013

EN ISO 4254-7:2009

Plats och datum för intyget: [5]

Identitet och signatur för person med befogenhet att upprätta intyget: [6]

Namn och adress för person behörig att upprätta den tekniska dokumentationen:

Benedikt von Riedesel
Administrativ chef, MacDon Europe GmbH
Hagenauer Straße 59
65203 Wiesbaden (Tyskland)
bvonriedesel@macdon.com

SL

Mi, [1]

izjavljamo, da izdelek:

Vrsta stroja: [2]

Ime in model: [3]

Serijska/-e številka/-e: [4]

ustreza vsem zadevnim določbam Direktive 2006/42/ES.

Uporabljeni usklajeni standardi, kot je navedeno v členu 7(2):

EN ISO 4254-1:2013

EN ISO 4254-7:2009

Kraj in datum izjave: [5]

Istovetnost in podpis osebe, opolnomočene za pripravo izjave: [6]

Ime in naslov osebe, pooblaščene za pripravo tehnične datoteke:

Benedikt von Riedesel
Generalni direktor, MacDon Europe GmbH
Hagenauer Straße 59
65203 Wiesbaden (Nemčija)
bvonriedesel@macdon.com

SK

My, [1]

týmto prehlasujeme, že tento výrobok:

Typ zariadenia: [2]

Názov a model: [3]

Výrobné číslo: [4]

spĺňa príslušné ustanovenia a základné požiadavky smernice č. 2006/42/ES.

Použité harmonizované normy, ktoré sa uvádzajú v Článku č. 7(2):

EN ISO 4254-1:2013

EN ISO 4254-7:2009

Miesto a dátum prehlásenia: [5]

Meno a podpis osoby oprávnenej vypracovať toto prehlásenie: [6]

Meno a adresa osoby oprávnenej zostaviť technický súbor:

Benedikt von Riedesel
Generálny riaditeľ MacDon Europe GmbH
Hagenauer Straße 59
65203 Wiesbaden (Nemecko)
bvonriedesel@macdon.com

1023373

Introduction

This instruction manual contains information on the MacDon M1240 Windrower, which when coupled with one of MacDon's A40DX Auger Headers, D1X or D1XL Series Draper Headers, R85 Rotary Disc Headers, or R113 SP Rotary Disc Headers, provides a package designed to cut and lay a variety of crops into fluffy, uniform windrows.

Carefully read all the material provided before attempting to use the machine.

If you follow the instructions provided, your windrower will work well for many years.

Use this manual as your first source of information about the machine. Use the Table of Contents and the Index to guide you to specific areas. Study the Table of Contents to familiarize yourself with how the material is organized. Use this manual in conjunction with your header operator's manual.

When setting up the machine or making adjustments, review and follow the recommended machine settings in all relevant MacDon publications. Failure to do so may compromise the machine function and machine life and may result in a hazardous situation.

MacDon provides warranty for Customers who operate and maintain their equipment as described in this manual. A copy of the MacDon Industries Limited Warranty Policy, which explains this warranty, should have been provided to you by your Dealer. Damage resulting from any of the following conditions will void the warranty:

- Accident
- Misuse
- Abuse
- Improper maintenance or neglect
- Abnormal or extraordinary use of the machine
- Failure to use the machine, equipment, component, or part in accordance with the manufacturer's instructions

A manual storage case is provided in the cab. Keep this manual handy for frequent reference and to pass on to new Operators or Owners. Call your Dealer if you need assistance, information, or additional copies of this manual.

Conventions

- The M1240 Windrower is Dual Direction®, meaning the windrower can be driven in cab-forward or engine-forward modes. Right and left designations are therefore determined from the operator's position, facing the direction of travel. This manual uses the terms "right cab-forward", "left cab-forward", "right engine-forward", and "left engine-forward" when referencing specific locations on the machine.
- Unless otherwise noted, use the standard torque values provided in Chapter *8.1 Torque Specifications, page 405* of this document.

NOTE:

Keep your MacDon publications up-to-date. The most current version can be downloaded from our website (*www.macdon.com*) or from our Dealer-only site (*https://portal.macdon.com*) (login required).

List of Revisions

At MacDon, we're continuously making improvements. Occasionally these improvements affect product documentation. The following list provides an account of major changes from the previous version of this document.

Summary of Change	Location
Added explanation of IMPORTANT and NOTE.	*1.2 Signal Words, page 2*
Edited hazard statement.	*1.9 Engine Safety, page 14*
• Added specifications for charge system pump. • Added R113 SP to list of compatible headers.	*2.2 Specifications, page 32*
Added hazard statement.	*3.3.12 Heating/Cooling – Deluxe Cab Only, page 47*
Updated illustration.	*3.15 Windrower Controls, page 69*
Added information about the differential auger-reel control feature and Reel Speed Control kit for A40DX Auger Headers.	*Reel and Disc Speed Switch, page 73*
Added note regarding hydraulic oil temperature.	*4.3.2 Break-in Period, page 110*
Edited hazard statement.	*Filling Fuel Tank, page 112*
Added note regarding hydraulic oil temperature.	*Starting the Engine, page 115*
Edited hazard statement.	*Shutting down the Engine, page 120*
Added note regarding hydraulic oil temperature.	*Engine Temperature, page 121*
Edited hazard statement.	*Entering and Exiting the Windrower, page 124*
Added hazard statement.	*Stopping, page 130*
Edited hazard statement.	*Driving on Road in Engine-Forward Mode, page 132*
Edited existing hazard statement and added another one. Revised instructions to say that the header should be raised only enough to clear common obstacles, and not so much that it significantly reduces visibility.	*Driving on Road in Cab-Forward Mode, page 135*
Clarified procedure.	*Reversing the Header, page 199*
Added new topic.	*4.4.4 R113 Rotary Disc Header, page 177*
Added new topic.	*Attaching R113 Rotary Disc Header to Windrower, page 177*
Added new topic.	*Connecting R113 Rotary Disc Header Hydraulics to an M1240 Windrower, page 182*
Added new topic.	*Detaching R113 Rotary Disc Header, page 187*
Deleted Operating the Swath Roller topic.	—
Added new topic.	*4.7.10 Swath Compressor, page 229*
Added information about the Differential Auger-Reel Control and Reel Speed Control kit.	*4.8.1 Reel and Auger Speed, page 232*

Summary of Change	Location
Added new topic.	*Setting Auger Speed, page 235*
Added new topic.	*4.10 Operating with an R113 Rotary Disc Header, page 254*
Added new topic.	*4.10.1 Disc Speed, page 254*
Added new topic.	*Setting Disc Speed, page 254*
Added new topic.	*4.9.2 Adjusting Disc Pressure Alarm, page 248*
Added new topic.	*4.9.3 Setting Float Options with Fixed Deck, page 250*
Added new topic.	*4.9.4 Disc Header Run Screens, page 252*
Added new topic.	*Run Screen 1, page 252*
Added new topic.	*Run Screen 2, page 253*
Updated gearbox lubricant capacity.	*5.1.3 Lubricants, Fluids, and System Capacities, page 262*
Added checking engine gearbox oil level to the list of things to check every 10 hours or daily. Removed it from the list of things to check every 50 hours.	*5.2.2 Maintenance Schedule/Record, page 265*
Added requirement to check engine gearbox oil.	*5.6 Every 10 Hours or Daily, page 282*
Revised procedure and illustrations.	*5.5.6 Changing Engine Gearbox Lubricant, page 276*
Added drive tire inflation specifications for the R113 Rotary Disc Header and the A40DX Grass Seed Auger Header. Revised drive tire inflation specifications for the R85 Rotary Disc Header.	*5.6.4 Checking Tire Pressures, page 285*
Changed frequency from every 50 hours to every day. Edited hazard statement. Added step.	*5.6.9 Checking Engine Gearbox Lubricant Level and Adding Lubricant, page 291*
Removed requirement to change engine gearbox oil.	*5.7 Every 50 Hours, page 293*
Updated procedure and edited hazard statement.	*Checking Operator Presence System, page 319*
Added new topic.	*Auxiliary Power Posts, page 342*
Updated terminology.	*Adjusting Rear Roof Work Lights, page 357*
Updated terminology.	*Adjusting Rear Swath Lights, page 358*
• Updated illustration to show new shock supports. • Added note warning not to damage engine oil pan when raising windrower and edited an existing hazard statement.	*Adjusting Caster Tread Width, page 379*
Updated bundle numbers.	*6.1.1 Automated Steering Systems, page 385*
Added new topic.	*6.2.5 Double Windrow Attachment Shutoff Kit, page 387*
Added new topic.	*6.3.2 Single Side Mud Caster Wheels, page 390*
Revised entries to make it clear that when the steering wheel is in locked position it is also centered.	*7.1 Engine Troubleshooting, page 391*

Summary of Change	Location
Updated gearbox lubricant capacity.	Inside back cover
Removed reference to hydraulic oil low temperature alarm. There is currently no such alarm.	*7.3 Hydraulics Troubleshooting, page 396*

Serial Numbers

If you require MacDon technical assistance, please have the machine's serial numbers recorded and ready before you call.

Record the model number, serial number, and year of manufacture of the windrower and engine on the lines below.

The windrower serial number plate (A) is located on the left side of the main frame near the walking beam.

Windrower Model Number: _____

Windrower Serial Number: _____

Year of Manufacture: _____

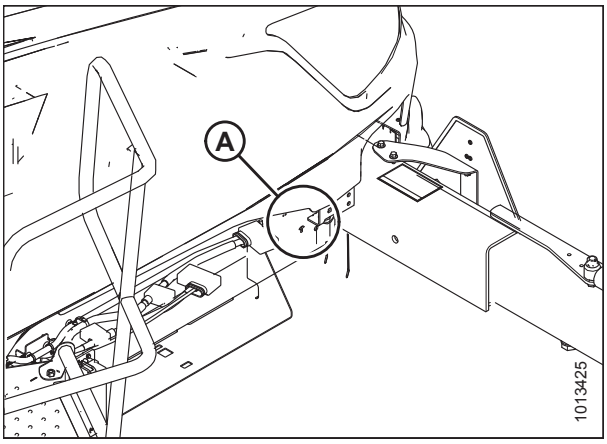

Windrower Serial Number Location

The engine serial number plate (A) is located on top of the engine cylinder head cover.

Engine Serial Number: _____

Year of Manufacture: _____



Engine Serial Number Location

Declaration of Conformity iii
Introduction i
List of Revisions ii
Serial Numbers v

Chapter 1: Safety 1

1.1 Safety Alert Symbols 1
1.2 Signal Words 2
1.3 General Safety 3
1.4 Maintenance Safety 5
1.5 Hydraulic Safety 6
1.6 Tire Safety 7
1.7 Battery Safety 8
1.8 Welding Precaution 9
1.9 Engine Safety 14
1.9.1 High-Pressure Rail 14
1.9.2 Engine Electronics 15
1.10 Safety Signs 16
1.10.1 Installing Safety Decals 16
1.11 Safety Sign Locations 17
1.12 Understanding Safety Signs 19

Chapter 2: Product Overview 29

2.1 Definitions 29
2.2 Specifications 32
2.3 Windrower Dimensions 35
2.4 Component Location 36

Chapter 3: Operator's Station 39

3.1 Console 39
3.2 Operator Presence System 41
3.2.1 Header Drive 41
3.2.2 Engine and Transmission 41
3.3 Operator's Seat Adjustments 42
3.3.1 Armrest 42
3.3.2 Armrest Angle 42
3.3.3 Suspension and Height 43
3.3.4 Fore-Aft Slide Control 43
3.3.5 Fore-Aft Isolator Control 44
3.3.6 Tilt 44
3.3.7 Lumbar Support 45
3.3.8 Vertical Dampener 45

3.3.9 Cushion Tilt – Deluxe Cab Only 46
3.3.10 Cushion Extension – Deluxe Cab Only 46
3.3.11 Lateral Isolation Lockout – Deluxe Cab Only 47
3.3.12 Heating/Cooling – Deluxe Cab Only 47
3.4 Training Seat 48
3.5 Seat Belts 49
3.6 Adjusting the Steering Column and Steering Wheel 51
3.7 Lighting 52
3.7.1 Cab-Forward Lighting – Field 52
3.7.2 Cab-Forward Lighting – Road 53
3.7.3 Engine-Forward Lighting – Road 54
3.7.4 Tail/Beacon Lighting 55
3.7.5 Turn Signal / Hazard Lighting 56
3.8 Windshield Wipers 57
3.9 Rear View Mirrors 58
3.10 Cab Temperature 59
3.10.1 Heater Shut-Off Valve 59
3.10.2 Air Distribution 59
3.10.3 Climate Controls 60
3.11 Operator Amenities 61
3.12 Radio 63
3.12.1 AM/FM/CD/USB Radio with Bluetooth® Wireless Technology 63
Activating Bluetooth® Feature 64
Pairing a Bluetooth® Device 65
3.13 Horn 66
3.14 Engine Controls 67
3.14.1 Using Eco Engine Control 68
3.15 Windrower Controls 69
3.16 Header Controls 70
3.16.1 Header Engage Switch 70
3.16.2 Header Drive Reverse Button 70
3.16.3 Ground Speed Lever Switches 71
Header Position Six-Way Switch 72
Reel Position Four-Way Switch 72
Reel and Disc Speed Switch 73
One-Touch-Return Buttons (A, B, C) 73
3.16.4 Console Header Buttons 74
Deck Shift / Float Presets 75
Conveyor Speed Adjustment Buttons 76
Auxiliary Lift Switches 76
3.17 Harvest Performance Tracker Display 77
3.17.1 Harvest Performance Tracker Screen Layout 77
3.17.2 Navigating the Harvest Performance Tracker Display 80
Scroll Knob, Scroll Wheel, and Select Button 80

Home, Back, and Select Buttons 81
Soft Keys 81
QuickMenu System 82
Main Menu 83
Menu Icons 84
Faults and Telltales 87
3.17.3 Setting up the Harvest Performance Tracker Screen 90
Setting Screen Brightness 90
Setting Alarm Volume 91
Setting Time and Date 92
Setting Language and Units of Measurement 92
Resetting to Factory Defaults 93
3.17.4 Calibrating the Windrower and Header 94
3.17.5 Setting Windrower Tire Size 97
3.17.6 Activating Control Locks 98
3.17.7 Machine Information Pages 99
Accessing Windrower Information 99
Accessing Header Information 100
Accessing Software Information 101
Accessing Performance Information 102
3.17.8 F1 to F4 Function Buttons 104

Chapter 4: Operation 105

4.1 Owner/Operator Responsibilities 105
4.2 Symbol Definitions 106
4.2.1 Windrower Operating Symbols 106
4.2.2 Harvest Performance Tracker Symbols 107
4.3 Operating the Windrower 109
4.3.1 Operational Safety 109
4.3.2 Break-in Period 110
4.3.3 Preseason Checks / Annual Service 110
Air Conditioning Compressor Coolant Cycling 111
4.3.4 Daily Checks and Maintenance 112
Filling Fuel Tank 112
Filling the Diesel Exhaust Fluid Tank 113
Checking Engine Oil Level 114
4.3.5 Engine Operation 115
Starting the Engine 115
Programming the Eco Engine Control 119
Shutting down the Engine 120
Engine Temperature 121
Engine Oil Pressure 121
Exhaust System Cleaning 121
Viewing Engine Cooling Data 123
4.3.6 Operating the Windrower 124
Entering and Exiting the Windrower 124
Adjusting Ground Speed Limit 124
Driving Forward in Cab-Forward Mode 125
Driving in Reverse in Cab-Forward Mode 127
Driving Forward in Engine-Forward Mode 128

Driving in Reverse in Engine-Forward Mode 129
Spin Turning 130
Stopping 130
Viewing Performance Data 131
4.3.7 Transporting 132
Driving on Road in Engine-Forward Mode 132
Driving on Road in Cab-Forward Mode 135
Towing Header with Windrower 138
Towing the Windrower – Emergency 140
4.3.8 Storing the Windrower 141
4.4 Attaching and Detaching Headers 143
4.4.1 A40DX Auger Header 143
Attaching an A40DX Auger Header 143
Connecting A40DX Hydraulics 149
Detaching an A40DX Auger Header 150
4.4.2 D1X or D1XL Series Draper Header 154
Attaching Draper Header Supports 154
Attaching a D1X or D1XL Series Draper Header 155
Connecting D1X or D1XL Series Hydraulics 160
Detaching a D1X or D1XL Series Draper Header 162
4.4.3 R85 4.9 m (16 ft.) Rotary Disc Header 167
Attaching an R85 4.9 m (16 ft.) Rotary Disc Header 167
Connecting R85 4.9 m (16 ft.) Rotary Disc Header Hydraulics 172
Detaching R85 4.9 m (16 ft.) Rotary Disc Header 174
4.4.4 R113 Rotary Disc Header 177
Attaching R113 Rotary Disc Header to Windrower 177
Connecting R113 Rotary Disc Header Hydraulics to an M1240 Windrower 182
Detaching R113 Rotary Disc Header 187
4.5 Checking Header Settings 192
4.6 Operating a Header 193
4.6.1 Engaging and Disengaging Header Safety Props 193
4.6.2 Using Header Float 194
Checking Float 195
Setting the Float 196
Removing and Restoring Float 198
4.6.3 Header Drive 198
Engaging and Disengaging the Header 199
Reversing the Header 199
4.6.4 Adjusting Header Angle 200
Checking Self-Locking Center-Link Hook 201
4.6.5 Setting Cutting Height 202
4.6.6 Double Windrowing 202
Double Windrow Attachment Deck Position 203
Double Windrow Attachment Conveyor Speed 203
4.6.7 One-Touch-Return 204
4.6.8 Adjusting Header Raise and Lower Rates 205
4.7 Operating with D1X or D1XL Series Draper Header 207
4.7.1 Header Position 207
4.7.2 Adjusting Reel Fore-Aft Position 207

4.7.3 Adjusting Reel Height 207
4.7.4 Leveling the Header 208
4.7.5 Adjusting Reel Speed 210
Setting Reel Speed in Auto Mode 210
Setting Reel Speed in Manual Mode 212
Adjusting Reel Alarm Pressure 213
4.7.6 Adjusting Draper Speed 215
Setting Draper Speed in Auto Mode 215
Setting Draper Speed in Manual Mode 217
Adjusting Draper Alarm Pressure 218
Draper Slip Warning 220
4.7.7 Knife Speed 220
Setting Knife Speed 221
Adjusting Knife Alarm Pressure – Draper Header 222
Adjusting Knife Speed Alarm 224
4.7.8 Deck Shift Control 225
Shifting Decks 225
Setting Float Options with Deck Shift 226
4.7.9 Draper Header Run Screens 228
Run Screen 1 228
Run Screen 2 229
4.7.10 Swath Compressor 229
Controlling the Swath Compressor 229
Locking the Swath Compressor 231
4.8 Operating with an A40DX Auger Header 232
4.8.1 Reel and Auger Speed 232
Setting Reel Speed in Auto Mode 232
Setting Reel Speed in Manual Mode 234
Setting Auger Speed 235
Adjusting the Reel/Auger Alarm Pressure 237
4.8.2 Knife Speed 238
Setting Knife Speed 239
Adjusting Knife Alarm Pressure – Auger Header 240
Adjusting Knife Speed Alarm 241
4.8.3 Setting Float Options with Fixed Deck 243
4.8.4 Auger Header Run Screens 245
Run Screen 1 245
Run Screen 2 246
4.9 Operating with an R85 Rotary Disc Header 247
4.9.1 Setting Disc Speed 247
4.9.2 Adjusting Disc Pressure Alarm 248
4.9.3 Setting Float Options with Fixed Deck 250
4.9.4 Disc Header Run Screens 252
Run Screen 1 252
Run Screen 2 253
4.10 Operating with an R113 Rotary Disc Header 254
4.10.1 Disc Speed 254
Setting Disc Speed 254
Adjusting Disc Pressure Alarm 254

4.10.2 Setting Float Options with Fixed Deck 256
4.10.3 Disc Header Run Screens 258
Run Screen 1 258
Run Screen 2 259

Chapter 5: Maintenance and Servicing 261

5.1 Recommended Fuel, Fluids, and Lubricants 261
5.1.1 Storing Lubricants and Fluids 261
5.1.2 Fuel Specifications 261
5.1.3 Lubricants, Fluids, and System Capacities 262
5.1.4 Filter Part Numbers 263
5.2 Windrower Break-In Inspections and Maintenance Schedule 264
5.2.1 Break-in Inspection Schedule 264
5.2.2 Maintenance Schedule/Record 265
5.2.3 Electronic Maintenance Tool 267
5.3 Engine Compartment 268
5.3.1 Opening Hood 268
5.3.2 Closing Hood 269
5.4 Platform 270
5.4.1 Opening Platform 270
5.4.2 Closing Platform 270
5.4.3 Adjusting the Platform 271
5.4.4 Accessing Tool Box 272
5.5 Break-In Inspection Procedures 273
5.5.1 Tightening Drive Wheel Nuts 273
5.5.2 Tightening Caster Wheel Nuts 274
5.5.3 Tightening Caster Wheel Anti-Shimmy Dampeners 275
5.5.4 Tightening Walking Beam Adjustment Bolts 275
5.5.5 Tensioning Air Conditioner Compressor Belts 275
5.5.6 Changing Engine Gearbox Lubricant 276
5.5.7 Changing Wheel Drive Lubricant 277
5.5.8 Return Oil Filter 278
Removing Return Oil Filter 278
Installing Return Oil Filter 279
5.5.9 Charge Filter 280
Removing Charge Filter 280
Installing Charge Filter 281
5.6 Every 10 Hours or Daily 282
5.6.1 Checking Engine Oil Level 282
Adding Engine Oil 283
5.6.2 Fuel/Water Separator 283
Removing Water from Fuel System 284
5.6.3 Checking Hydraulic Oil 284
5.6.4 Checking Tire Pressures 285
5.6.5 Checking Engine Coolant Level 288

5.6.6 Hoses and Lines 288
5.6.7 Filling Fuel Tank 289
5.6.8 Filling the Diesel Exhaust Fluid Tank 290
5.6.9 Checking Engine Gearbox Lubricant Level and Adding Lubricant 291
5.7 Every 50 Hours 293
5.7.1 Fresh Air Intake Filter 293
Removing Fresh Air Intake Filter 293
Inspecting and Cleaning Fresh Air Intake Filter Element 294
Installing Fresh Air Intake Filter 295
5.7.2 Greasing the Windrower 296
Greasing Procedure 296
Grease Points 297
5.8 Every 100 Hours 298
5.8.1 Servicing Return Air Filter 298
5.8.2 Cleaning Cooler Module 299
Cleaning Left Cooling Module 299
Cleaning Right Cooling Module 302
5.9 Every 250 Hours or Annually 305
5.9.1 Changing Engine Oil 305
Draining Engine Oil 305
Replacing Engine Oil Filter 305
Adding Engine Oil 306
5.9.2 Maintaining Engine Air Filters 306
Removing Engine Primary Air Filter 306
Installing Engine Primary Air Filter 309
Cleaning Primary Air Filter 310
Replacing Secondary Air Filter 310
5.9.3 Checking Wheel Drive Lubricant Level 311
5.9.4 Adding Wheel Drive Lubricant 312
5.9.5 Inspecting Exhaust System 312
5.9.6 Changing Engine Gearbox Lubricant 314
5.10 Every 500 Hours or Annually 316
5.10.1 Maintaining Fuel Filters 316
Removing Primary Fuel Filter 316
Installing Primary Fuel Filter 317
Removing Secondary Fuel Filter 317
Installing Secondary Fuel Filter 318
Priming Fuel System 318
5.10.2 Safety Systems 319
Checking Operator Presence System 319
Checking Engine Interlock 321
5.11 Every 1000 Hours 322
5.11.1 Removing and Installing the Fuel Tank Vent Filter 322
5.11.2 DEF Supply Module Filter 323
Checking the DEF Supply Module Filter 323
Removing the Supply Module Filter 324
Cleaning and Inspecting the Supply Module Filter 325
Installing the Supply Module Filter 326

5.12 Every 2000 Hours 327
5.12.1 Changing Engine Coolant 327
Draining Coolant 327
Adding Coolant 328
5.12.2 Draining Hydraulic Oil 329
5.12.3 Filling Hydraulic Oil 331
5.12.4 Replacing the Diesel Exhaust Fluid Vent Hose Filter 332
5.12.5 General Engine Inspection 332
5.13 Annual Service 333
5.13.1 Batteries 333
Maintaining a Battery 333
Opening Battery Cover 333
Closing Battery Cover 334
Charging a Battery 335
Boosting a Battery 336
Removing a Battery 338
Installing a Battery 339
Disconnecting a Battery 340
Connecting Batteries 340
Auxiliary Power Posts 342
5.13.2 Checking Steering Link Pivots 342
5.13.3 Air Conditioning Evaporator 344
Removing Air Conditioning Cover 345
Cleaning Air Conditioning Evaporator Core 346
Installing Air Conditioning Cover 347
5.13.4 Checking Engine Coolant Strength 347
5.14 Maintenance as Required 349
5.14.1 Seat Belts 349
5.14.2 Draining Fuel Tank 349
5.14.3 Draining the Diesel Exhaust Fluid Tank 350
5.14.4 Belts 351
Tensioning Engine Fan Drive Belt 351
Replacing Engine Fan Drive Belt 351
Tensioning Air Conditioner Compressor Belts 352
Replacing Air Conditioner Compressor Belts 353
5.14.5 Engine Speed 353
5.14.6 Lighting 354
Aligning Headlights – Engine-Forward 354
Aligning Headlights – Cab-Forward 355
Adjusting Front Field Lights 356
Adjusting Rear Roof Work Lights 357
Adjusting Rear Swath Lights 358
Replacing Bulbs in Standard Work Lights 359
Replacing Headlight Bulb – Engine-Forward 360
Replacing LED Lights – Deluxe Cab Only 362
Replacing Bulbs in Red and Amber Lights 362
Replacing Red Tail Lights 363
Replacing Beacon Lights 364
Replacing the Cabin Dome Bulb 364
Replacing the Cabin Dome Light Assembly 365

Turn Signal Indicators 367
5.14.7 Accessing Circuit Breakers and Fuses 367
Checking and Replacing Fuses 368
Replacing Circuit Breakers and Relays 369
Fuse Panel and Relay Module Decals 370
Inspecting and Replacing 125A Main Fuses 375
5.14.8 Drive Wheels 376
Raising Drive Wheel 376
Removing Drive Wheels 377
Installing Drive Wheels 378
Lowering Drive Wheel 379
5.14.9 Caster Wheels 379
Adjusting Caster Tread Width 379
Installing Forked Caster Wheel 381
Removing Forked Caster Wheel 382
Lowering Caster Wheel 383
Raising Caster Wheel 383

Chapter 6: Options and Attachments 385

6.1 Cab 385
6.1.1 Automated Steering Systems 385
6.1.2 High Performance Lighting – Standard on Deluxe Cab Package 385
6.2 Header Operation 386
6.2.1 Conversion Kit for Disc Ready to Disc, Auger, and Draper Ready 386
6.2.2 Booster Spring Kit – External 386
6.2.3 Double Booster Spring Kit – External 387
6.2.4 Double Windrow Attachment 387
6.2.5 Double Windrow Attachment Shutoff Kit 387
6.2.6 Center-Link Lifter 388
6.2.7 Swath Compressor 388
6.3 Transport 389
6.3.1 Ballast 389
6.3.2 Single Side Mud Caster Wheels 390
6.3.3 Towing Harness 390
6.3.4 Weight Box 390

Chapter 7: Troubleshooting 391

7.1 Engine Troubleshooting 391
7.2 Electrical Troubleshooting 395
7.3 Hydraulics Troubleshooting 396
7.4 Header Drive Troubleshooting 397
7.5 Traction Drive Troubleshooting 398
7.6 Steering and Ground Speed Control Troubleshooting 400
7.7 Cab Air Troubleshooting 401
7.8 Operator's Station Troubleshooting 404

Chapter 8: Reference **405**

8.1 Torque Specifications 405

8.1.1 Metric Bolt Specifications 405

8.1.2 Metric Bolt Specifications Bolting into Cast Aluminum 407

8.1.3 O-Ring Boss Hydraulic Fittings – Adjustable 408

8.1.4 O-Ring Boss Hydraulic Fittings – Non-Adjustable 410

8.1.5 O-Ring Face Seal Hydraulic Fittings 411

8.1.6 Tapered Pipe Thread Fittings 412

8.2 Conversion Chart 413

8.3 Windrower Fault Codes 414

8.4 Engine Fault Codes 460

Index **493**

Lubricants, Fluids, and System Capacities **507**

Chapter 1: Safety

1.1 Safety Alert Symbols

This safety alert symbol indicates important safety messages in this manual and on safety signs on the machine.

This symbol means:

- **ATTENTION!**
- **BECOME ALERT!**
- **YOUR SAFETY IS INVOLVED!**

Carefully read and follow the safety message accompanying this symbol.

Why is safety important to you?

- Accidents disable and kill
- Accidents cost
- Accidents can be avoided



Figure 1.1: Safety Symbol

1.2 Signal Words

Three signal words, **DANGER**, **WARNING**, and **CAUTION**, are used to alert you to hazardous situations. Two signal words, **IMPORTANT** and **NOTE**, identify non-safety related information. Signal words are selected using the following guidelines:

DANGER

Indicates an imminently hazardous situation that, if not avoided, will result in death or serious injury.

WARNING

Indicates a potentially hazardous situation that, if not avoided, could result in death or serious injury. It may also be used to alert against unsafe practices.

CAUTION

Indicates a potentially hazardous situation that, if not avoided, may result in minor or moderate injury. It may be used to alert against unsafe practices.

IMPORTANT:

Indicates a situation that, if not avoided, could result in a malfunction or damage to the machine.

NOTE:

Provides additional information or advice.

1.3 General Safety

CAUTION

The following general farm safety precautions should be part of your operating procedure for all types of machinery.

Protect yourself.

- When assembling, operating, and servicing machinery, wear all protective clothing and personal safety devices that could be necessary for job at hand. Do **NOT** take chances. You may need the following:
  - Hard hat
  - Protective footwear with slip-resistant soles
  - Protective glasses or goggles
  - Heavy gloves
  - Wet weather gear
  - Respirator or filter mask
- Be aware that exposure to loud noises can cause hearing impairment or loss. Wear suitable hearing protection devices such as earmuffs or earplugs to help protect against loud noises.

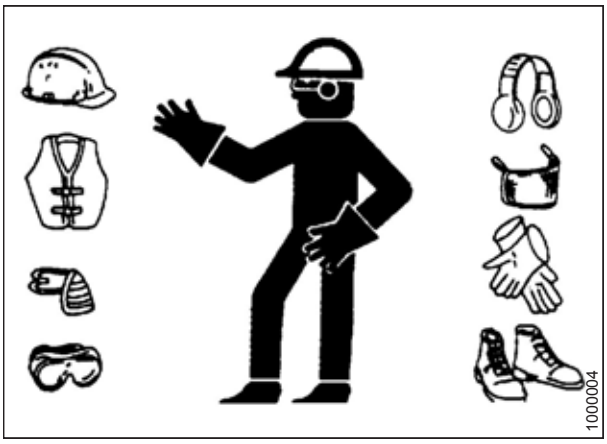

Figure 1.2: Safety Equipment



Figure 1.3: Safety Equipment

- Provide a first aid kit in case of emergencies.
- Keep a properly maintained fire extinguisher on the machine. Be familiar with its proper use.
- Keep young children away from machinery at all times.
- Be aware that accidents often happen when the operator is tired or in a hurry. Take time to consider safest way. **NEVER** ignore warning signs of fatigue.

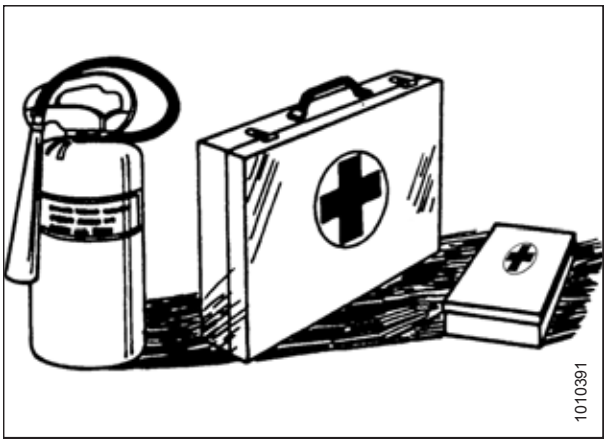

Figure 1.4: Safety Equipment

- Wear close-fitting clothing and cover long hair. **NEVER** wear dangling items such as scarves or bracelets.
- Keep all shields in place. **NEVER** alter or remove safety equipment. Make sure driveline guards can rotate independently of shaft and can telescope freely.
- Use only service and repair parts made or approved by equipment manufacturer. Substituted parts may not meet strength, design, or safety requirements.



Figure 1.5: Safety around Equipment

- Keep hands, feet, clothing, and hair away from moving parts. **NEVER** attempt to clear obstructions or objects from a machine while engine is running.
- Do **NOT** modify machine. Unauthorized modifications may impair machine function and/or safety. It may also shorten machine's life.
- To avoid injury or death from unexpected startup of machine, **ALWAYS** stop the engine and remove the key from the ignition before leaving the operator's seat for any reason.

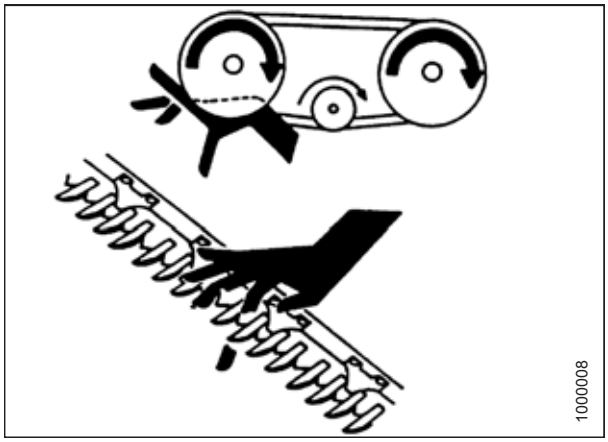

Figure 1.6: Safety around Equipment

- Keep service area clean and dry. Wet or oily floors are slippery. Wet spots can be dangerous when working with electrical equipment. Be sure all electrical outlets and tools are properly grounded.
- Keep work area well lit.
- Keep machinery clean. Straw and chaff on a hot engine is a fire hazard. Do **NOT** allow oil or grease to accumulate on service platforms, ladders, or controls. Clean machines before storage.
- **NEVER** use gasoline, naphtha, or any volatile material for cleaning purposes. These materials may be toxic and/or flammable.
- When storing machinery, cover sharp or extending components to prevent injury from accidental contact.



Figure 1.7: Safety around Equipment

1.4 Maintenance Safety

To ensure your safety while maintaining machine:

- Review operator's manual and all safety items before operation and/or maintenance of machine.
- Place all controls in Neutral, stop the engine, set the park brake, remove the ignition key, and wait for all moving parts to stop before servicing, adjusting, and/or repairing.
- Follow good shop practices:
  - Keep service areas clean and dry
  - Be sure electrical outlets and tools are properly grounded
  - Keep work area well lit



Figure 1.8: Safety around Equipment

- Relieve pressure from hydraulic circuits before servicing and/or disconnecting machine.
- Make sure all components are tight and that steel lines, hoses, and couplings are in good condition before applying pressure to hydraulic systems.
- Keep hands, feet, clothing, and hair away from all moving and/or rotating parts.
- Clear area of bystanders, especially children, when carrying out any maintenance, repairs, or adjustments.
- Install transport lock or place safety stands under frame before working under machine.
- If more than one person is servicing machine at same time, be aware that rotating a driveline or other mechanically-driven component by hand (for example, accessing a lubricant fitting) will cause drive components in other areas (belts, pulleys, and knives) to move. Stay clear of driven components at all times.
- Wear protective gear when working on machine.
- Wear heavy gloves when working on knife components.

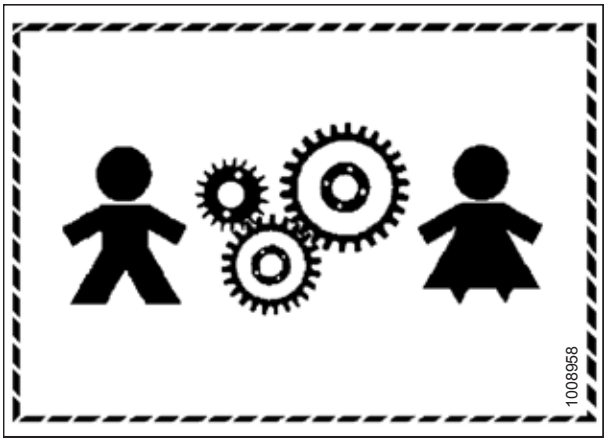

Figure 1.9: Equipment NOT Safe for Children

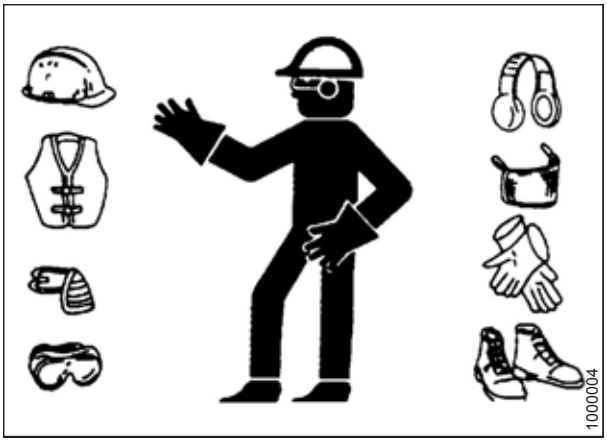

Figure 1.10: Safety Equipment

1.5 Hydraulic Safety

- Always place all hydraulic controls in Neutral before dismounting.
- Make sure that all components in hydraulic system are kept clean and in good condition.
- Replace any worn, cut, abraded, flattened, or crimped hoses and steel lines.
- Do **NOT** attempt any makeshift repairs to hydraulic lines, fittings, or hoses by using tapes, clamps, cements, or welding. The hydraulic system operates under extremely high-pressure. Makeshift repairs will fail suddenly and create hazardous and unsafe conditions.

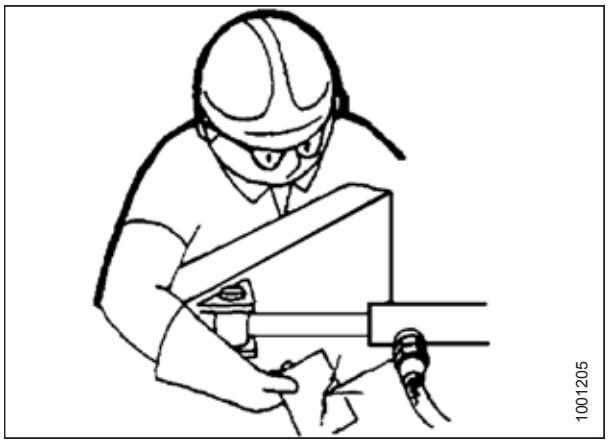

Figure 1.11: Testing for Hydraulic Leaks

- Wear proper hand and eye protection when searching for high-pressure hydraulic leaks. Use a piece of cardboard as a backstop instead of hands to isolate and identify a leak.
- If injured by a concentrated high-pressure stream of hydraulic fluid, seek medical attention immediately. Serious infection or toxic reaction can develop from hydraulic fluid piercing the skin.



Figure 1.12: Hydraulic Pressure Hazard

- Make sure all components are tight and steel lines, hoses, and couplings are in good condition before applying pressure to a hydraulic system.

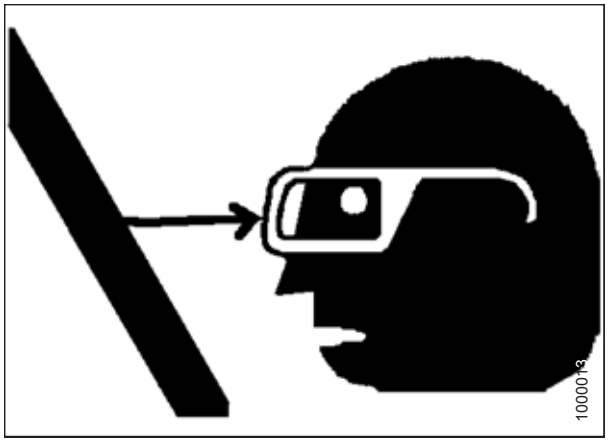

Figure 1.13: Safety around Equipment

1.6 Tire Safety

WARNING

- **Service tires safely.**
- **A tire can explode during inflation which could cause serious injury or death.**
- **Follow proper procedures when mounting a tire on a wheel or rim. Failure to do so can produce an explosion that may result in serious injury or death.**

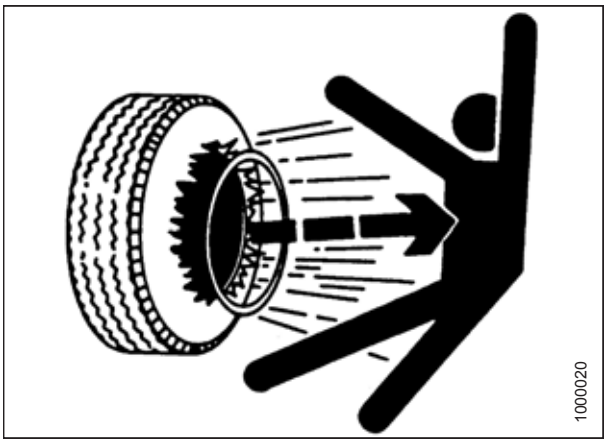

Figure 1.14: Overinflated Tire

WARNING

- **Do NOT stand over tire. Use a clip-on chuck and extension hose.**
- **Do NOT exceed maximum inflation pressure indicated on tire label.**
- **Replace tires that have defects.**
- **Replace wheel rims that are cracked, worn, or severely rusted.**
- **Never weld a wheel rim.**
- **Never use force on an inflated or partially inflated tire.**
- **Make sure the tire is correctly seated before inflating to operating pressure.**



Figure 1.15: Safely Inflating Tire

- **If the tire is not correctly positioned on the rim or is overinflated, the tire bead can loosen on one side causing air to escape at high speed and with great force. An air leak of this nature can thrust the tire in any direction, endangering anyone in area.**
- **Make sure all air is removed from the tire before removing the tire from the rim.**
- **Do NOT remove, install, or repair a tire on a rim unless you have proper equipment and experience to perform job. Take the tire and rim to a qualified tire repair shop.**

1.7 Battery Safety

WARNING

- **Keep all sparks and flames away from batteries; an explosive gas is given off by electrolyte.**
- **Ventilate when charging in enclosed space.**



Figure 1.16: Safety around Batteries

WARNING

- **Wear safety glasses when working near batteries.**
- **Do NOT tip batteries more than 45° to avoid electrolyte loss.**
- **Battery electrolyte causes severe burns. Avoid contact with skin, eyes, or clothing.**
- **Electrolyte splashed into eyes is extremely dangerous. Should this occur, force eye open, and flood with cool, clean water for 5 minutes. Call a doctor immediately.**
- **If electrolyte is spilled or splashed on clothing or body, neutralize it immediately with a solution of baking soda and water, then rinse with clear water.**

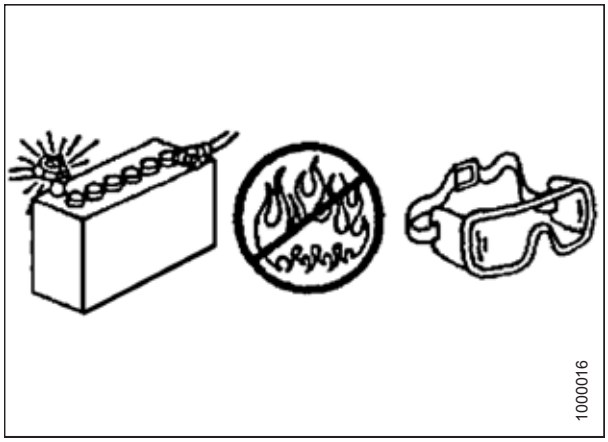

Figure 1.17: Safety around Batteries

WARNING

- **To avoid injury from spark or short circuit, disconnect battery ground cable before servicing any part of electrical system.**
- **Do NOT operate engine with alternator or battery disconnected. With battery cables disconnected and engine running, a high voltage can be built up if terminals touch frame. Anyone touching frame under these conditions would be severely shocked.**
- **When working around storage batteries, remember that all of the exposed metal parts are live. Never lay a metal object across terminals because a spark or short circuit will result.**
- **Keep batteries out of reach of children.**

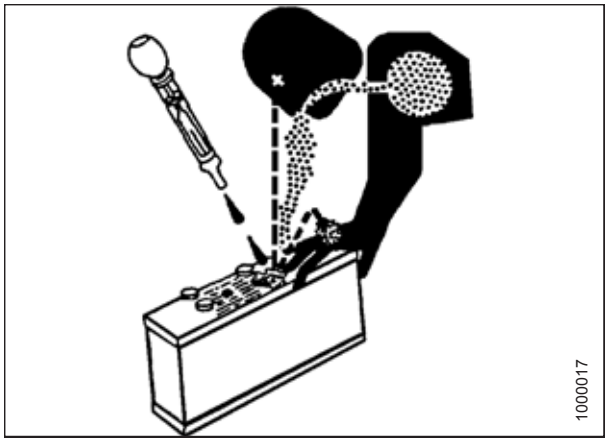

Figure 1.18: Safety around Batteries

1.8 Welding Precaution

WARNING

It is very important that correct procedures be followed when welding anything connected to the windrower. If procedures are not followed, it could result in severe damage to sensitive, expensive electronics. Even if complete failure of a module doesn't happen immediately, it is impossible to know what effect high current could have with regard to future malfunctions or shorter lifespan.

Due to the number of connectors, components to be welded should be removed from the windrower whenever possible rather than welded in place. When work needs to be completed on a header, disconnect the header completely from the windrower before welding. These same guidelines apply to plasma cutting, or any other high current electrical operation performed on the machine.

The following items need to be disconnected:

- Negative battery terminals (A) (two connections)

  IMPORTANT:

  Always disconnect the battery terminals first, and reconnect them last.

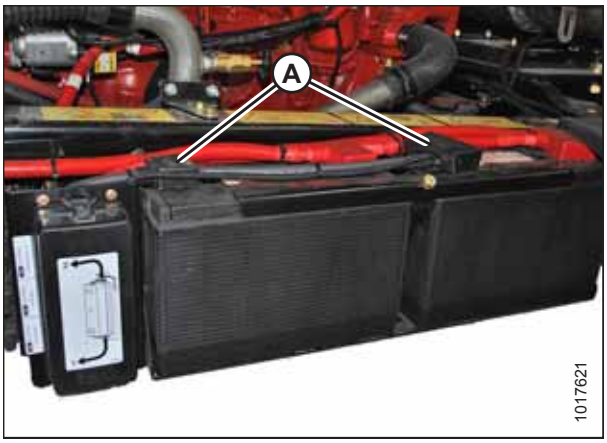

Figure 1.19: Negative Terminals

- Master controller (A)
  Four connectors: P231, P232, P233, and P234

  Location: Behind cab, near header lift/fan manifold

  To disconnect the connectors, press the two outer tabs, and pull the connector away from master controller.

  IMPORTANT:

  When reconnecting these connectors, double-check that the connectors are fully seated into the master controller, and that the two locking tabs on each end of all four connectors have popped outward. If the tabs are not popped outward, the connector is not fully seated.

  IMPORTANT:

  Do **NOT** power up or operate the windrower until these connectors are locked into place.



Figure 1.20: Master Controller

- Firewall extension module (A)
  Two connectors: P235 and P236

  Location: Behind cab, near header lift/fan manifold.

  To disconnect, use a small 3–6 mm (1/8–1/4 in.) blade screwdriver to insert into the connector's locking tab. Gently pry upward (no more than 6 mm [1/4 in.]) to unlock the connector tab, and then pull the connector away from the module.

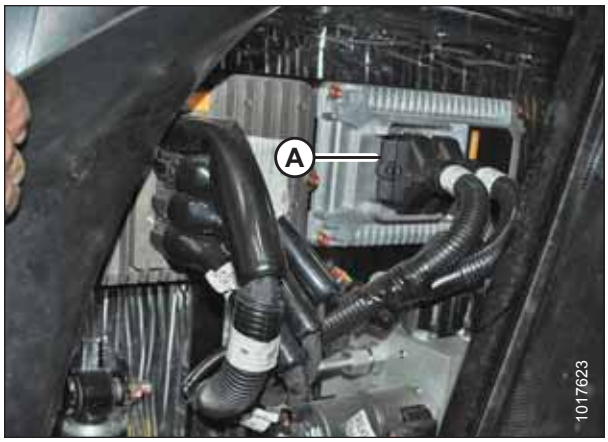

Figure 1.21: Firewall Extension Module

- Chassis extension module (A)
  Two connectors: P247 and P248

  Location: Under cab, inside left frame rail

  To disconnect, use a small 3–6 mm (1/8–1/4 in.) blade screwdriver to insert into the connector's locking tab. Gently pry upward (no more than 6 mm [1/4 in.]) to unlock the connector tab, and then pull the connector away from the module.

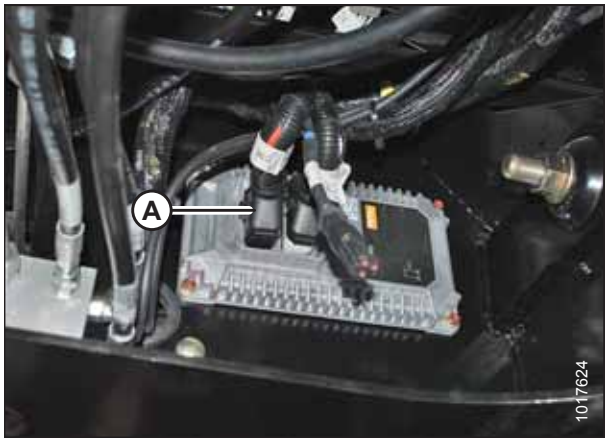

Figure 1.22: Chassis Extension Module

- Engine Control Module (ECM)
  Two connectors for Cummins: P100 (A) and J1 Cummins Proprietary ECM Connector (B)

  Location: On engine

  To disconnect, pull the rubber boot off the cover, unlock the latch, and undo the main over-center latch. Remove strain relief bolts (C) so the connectors can be pulled away from the ECM.

  IMPORTANT:

  Be sure to disconnect both connectors. Note connector locations.

  IMPORTANT:

  Be sure to reconnect connectors in the proper locations. Do **NOT** cross connect.

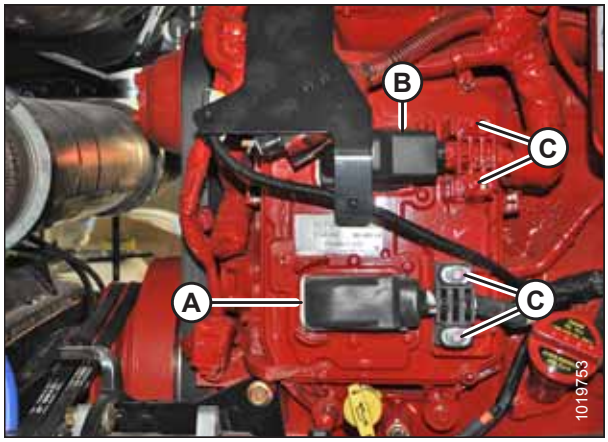

Figure 1.23: Engine Control Module

NOTE:

To disconnect the remaining circular Deutsch connectors, rotate the outer collar counterclockwise.

- Cab connectors (A)
  Two round connectors: C1 and C2

  Location: Under cab

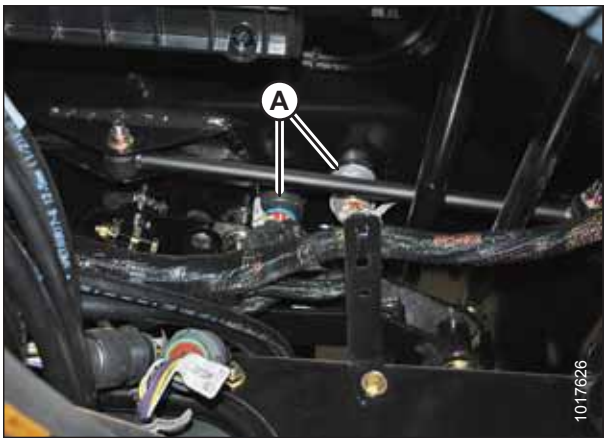

Figure 1.24: Cab Connectors

- Roof connectors (A)
  Four connectors: C10, C12, C13, and C14

  Location: Under cab at base of left cab post

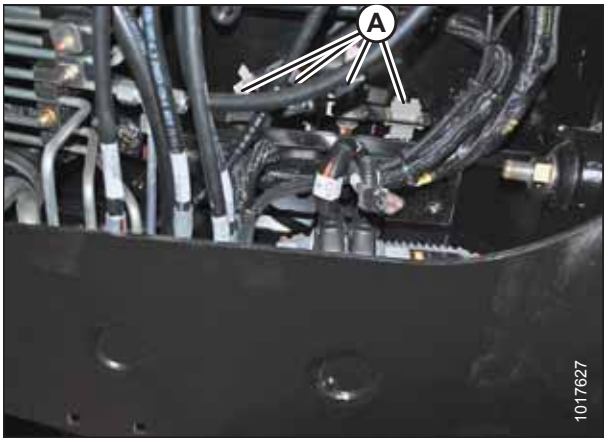

Figure 1.25: Roof Connectors

- Chassis relay module (A)
  Three connectors: P240, P241, and P242

  Location: Outside left frame rail near batteries

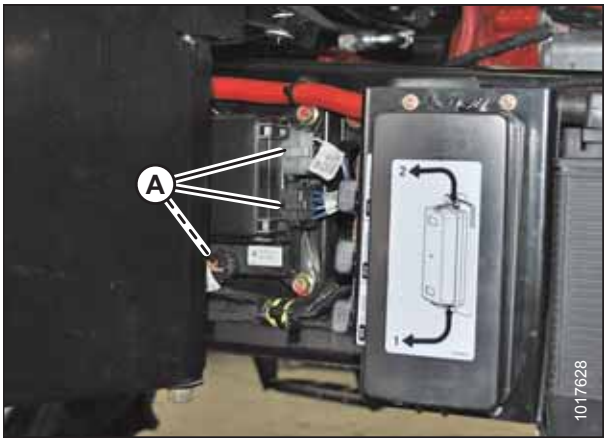

Figure 1.26: Chassis Relay Module

- Engine harness (A)
  Two round connectors: C30 and C31

  Location: Inside left frame rail, at rear of windrower

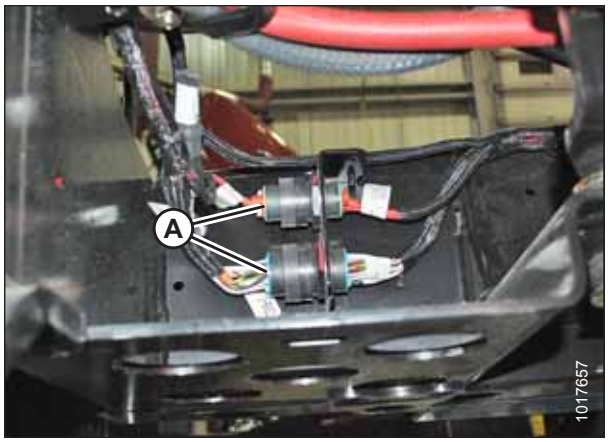

Figure 1.27: Engine Harness

- Air conditioning (A/C) box connectors (A)
  Two connectors: C15 and C16

  Location: Rear of A/C box

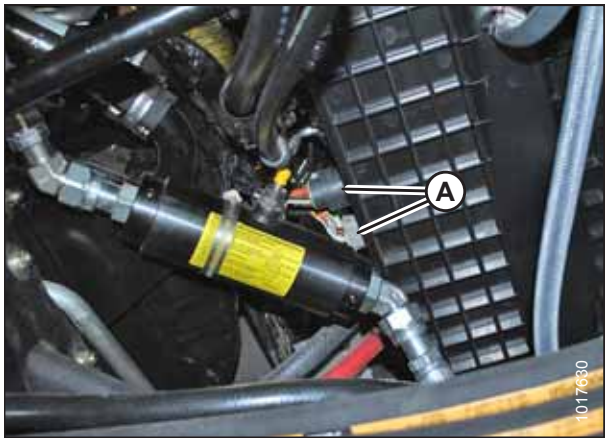

Figure 1.28: A/C Box Connectors

- Wheel motor connectors (A)
  Two round connectors: C25 and C26

  Location: Under center of frame, just behind front cross member

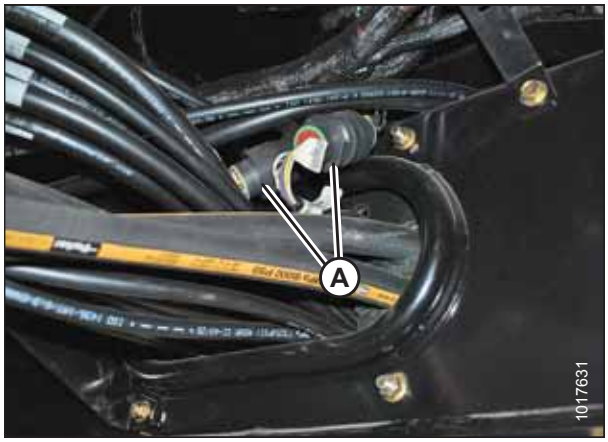

Figure 1.29: Wheel Motor Connectors

IMPORTANT:

To connect circular Deutsch connectors without bending the pins, align the plug with the receptacle before attempting to connect.

To align the connectors:

1. Observe the channel cuts and mating channel protrusions on the inner part of the circular walls of the connectors.
2. Face the mating connectors towards each other, and rotate connectors so that channels are aligned.
3. Press connectors together while turning the outer connector clockwise until collar locks.

1.9 Engine Safety

WARNING

Do NOT use aerosol starting aids such as ether. Such use could result in an explosion and personal injury.

CAUTION

- **On initial start-up of a new, serviced, or repaired engine, always be ready to stop the engine to prevent an overspeed. Do this by shutting off the air and/or fuel supply to the engine.**
- **Do NOT bypass or disable automatic shutoff circuits. The circuits help prevent personal injury, and prevent engine damage. Contact your Dealer for repairs and adjustments.**
- **Inspect the engine for potential hazards.**
- **Before starting the engine, ensure no one is on, underneath, or close to the engine. Ensure that people clear the area.**
- **All protective guards and covers must be installed if the engine must be started to perform service procedures.**
- **To help prevent an accident, work around rotating parts carefully.**
- **If a warning tag is attached to the engine start switch or controls, do NOT start engine or move controls. Consult whoever attached the warning tag before starting the engine.**
- **Start engine from operator's station. Follow procedure in the Starting Engine section of the operator's manual. Knowing the correct procedure will help prevent major damage to engine components and prevent personal injury.**
- **To ensure that the jacket water heater (if equipped) and/or lubricant oil heater (if equipped) is working correctly, check the water temperature gauge and/or oil temperature gauge during heater operation.**
- **Engine exhaust contains products of combustion, which can be harmful to your health. Always start and operate the engine in a well-ventilated area. If the engine is started in an enclosed area, vent exhaust to the outside.**
- **Engine exhaust gases become very hot during operation and can burn people and common materials. Stay clear of the rear of machine and avoid exhaust gases when engine is running.**

NOTE:

The engine may not be equipped with a device for cold starting. If the engine will be operated in very cold conditions, then an additional cold-starting aid may be required.

1.9.1 High-Pressure Rail

WARNING

- **Contact with high-pressure fuel may cause fluid penetration and burn hazards. High-pressure fuel spray may cause a fire hazard. Failure to follow these instructions may cause personal injury or death.**
- **Before disconnecting fuel lines or any other components under high-pressure between the fuel pump and high-pressure common rail fuel system, confirm that the fuel pressure is relieved.**

1.9.2 Engine Electronics

WARNING

Tampering with electronic system installation or original equipment manufacturer (OEM) wiring installation can be dangerous and could result in personal injury or death and/or engine damage.

WARNING

Electrical Shock Hazard. The electronic unit injectors use DC voltage. The engine control module (ECM) sends this voltage to the electronic unit injectors. Do NOT come in contact with the harness connector for the electronic unit injectors while engine is operating. Failure to follow this instruction could result in personal injury or death.

This engine has a comprehensive, programmable engine monitoring system. The ECM has the ability to monitor engine operating conditions. If conditions exceed the allowable range, the ECM will initiate immediate action.

The engine monitoring system can initiate the following actions:

- Warning
- Derate
- Shut down

Abnormalities in the following monitored conditions can limit engine speed and/or engine power:

- Engine coolant temperature
- Engine oil pressure
- Engine speed
- Intake manifold air temperature
- Diesel exhaust fluid (DEF) system performance
- Aftertreatment system performance

1.10 Safety Signs

- Keep safety signs clean and legible at all times.
- Replace safety signs that are missing or illegible.
- If original part on which a safety sign was installed is replaced, be sure the repair part displays the current safety sign.
- Replacement safety signs are available from your MacDon Dealer Parts Department.

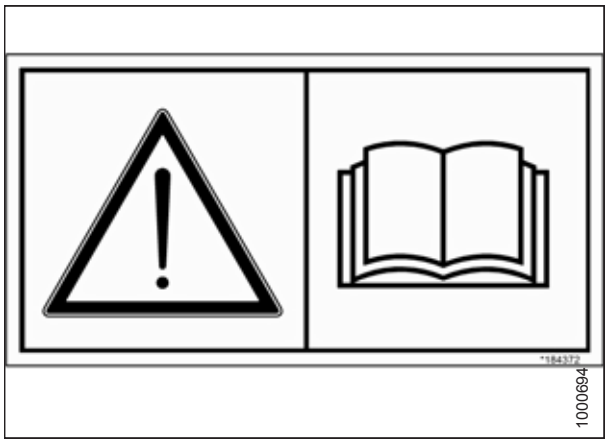

Figure 1.30: Operator's Manual Decal

1.10.1 Installing Safety Decals

1. Clean and dry installation area.
2. Decide on exact location before you remove decal backing paper.
3. Remove smaller portion of split backing paper.
4. Place decal in position and slowly peel back remaining paper, smoothing decal as it is applied.
5. Prick small air pockets with a pin and smooth out.

1.11 Safety Sign Locations

Figure 1.31: Safety Sign Locations

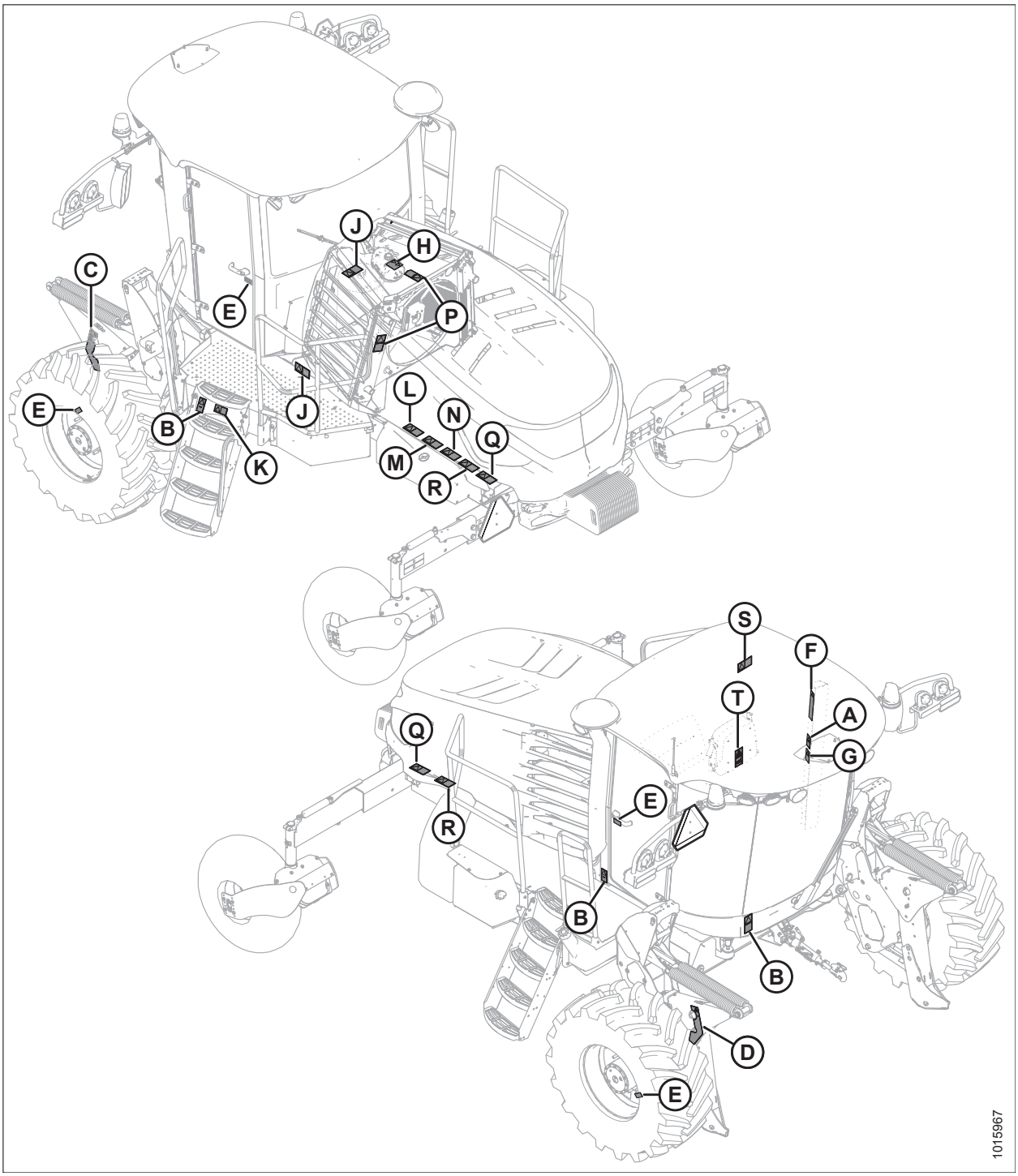

Table 1.1 Safety Sign Locations

Ref	MD Part Number	Safety Sign Description
A	166234	Decal – Warning (training seat and seat belts)
B	166425	Decal – Danger
C	166438	Decal – Header lock, 2 panel (LH)
D	166439	Decal – Header lock, 2 panel (RH)
E	166454	Decal – Read manual
F	166457	Decal – Warning, read manual steering service
G	166463	Decal – Transport
H	166824	Decal – Fill rate
J	166832	Decal – High pressure fluid
K	166829	Decal – Caution, balance
L	166834	Decal – Warning, starter jump
M	166835	Decal – Warning, battery explode
N	166836	Decal – Warning, battery burn
P	166837	Decal – Danger, fan
Q	166838	Decal – Warning, hot surface
R	166839	Decal – Warning, belt
S	166843	Decal – Steering control
T	167502	Decal – Warning, pinch hazard

NOTE:

For a more detailed illustration and description of safety signs, refer to *1.12 Understanding Safety Signs, page 19*.

1.12 Understanding Safety Signs

MD #166234

Run-over hazard

WARNING

- The training seat is provided for an experienced Operator of the machine when a new Operator is being trained.
- The training seat is **NOT** intended as a passenger seat or for use by children.
- Use the seat belt whenever operating the machine or riding as a trainer.
- Keep all other riders off the machine.



Figure 1.32: MD #166234

MD #166425

Run-over hazard

WARNING

- Remove the key from the ignition.
- Read the windrower and header manuals for inspection and maintenance instructions.



Figure 1.33: MD #166425

MD #166438

Crushing hazard

DANGER

- Rest header on ground or engage safety props before going under unit.

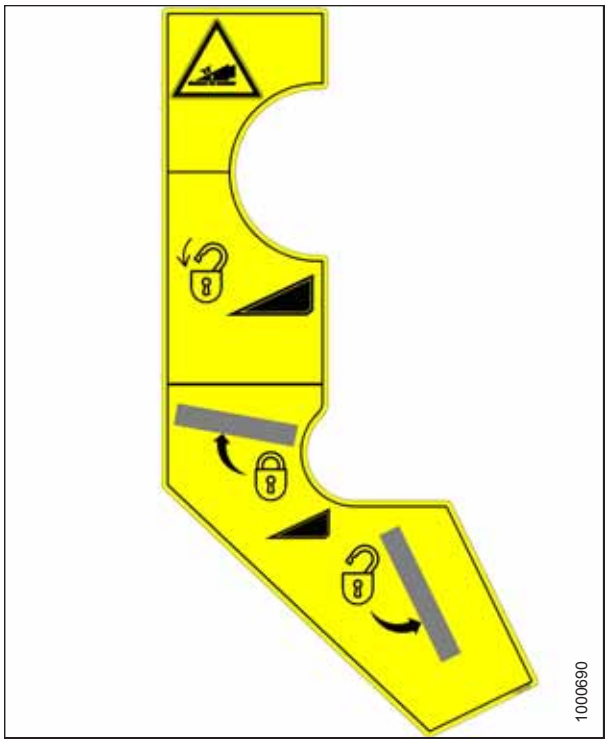

Figure 1.34: MD #166438

MD #166439

Crushing hazard

DANGER

- Rest header on ground or engage safety props before going under unit.

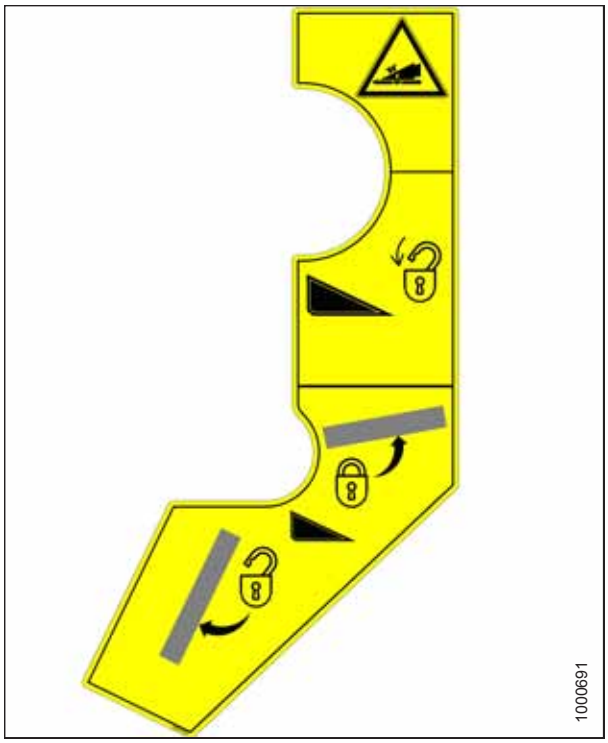

Figure 1.35: MD #166439

MD #166454

General hazard pertaining to machine operation and servicing

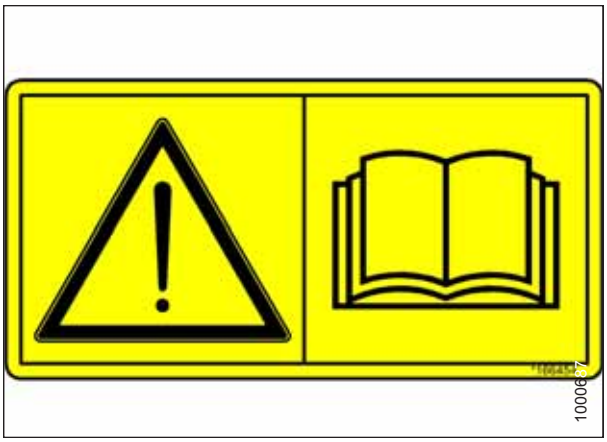

Figure 1.36: MD #166454

CAUTION

- Read the operator's manual and follow all safety instructions.
- Do **NOT** allow untrained persons to operate the machine.
- Review safety instructions with all Operators every year.
- Ensure that all safety signs are installed and legible.
- Make certain everyone is clear of machine before starting engine and during operation.
- Keep riders off the machine.
- Keep all shields in place and stay clear of moving parts.
- Disengage header drive, put transmission in Neutral, and wait for all movement to stop before leaving operator's position.
- Stop the engine and remove the key from the ignition before servicing, adjusting, lubricating, cleaning, or unplugging machine.
- Engage locks to prevent lowering of header or reel before servicing in the raised position.
- Use slow moving vehicle emblem and flashing warning lights when operating on roadways unless prohibited by law.

MD #166457

General hazard pertaining to machine operation and servicing

CAUTION

To avoid injury or death from improper or unsafe machine operation:

- Read the operator's manual and follow all safety instructions.
- Do **NOT** allow untrained persons to operate the machine.
- Review safety instructions with all Operators every year.
- Ensure that all safety signs are installed and legible.
- Make certain everyone is clear of machine before starting engine and during operation.
- Keep riders off the machine.
- Keep all shields in place and stay clear of moving parts.
- Disengage header drive, put transmission in Neutral and wait for all movement to stop before leaving operator's position.
- Stop the engine and remove the key from the ignition before servicing, adjusting, lubricating, cleaning, or unplugging machine.
- Engage locks to prevent lowering of header or reel before servicing in the raised position.
- Use slow moving vehicle emblem and flashing warning lights when operating on roadways unless prohibited by law.

Run-over hazard

WARNING

- Machine will move if steering wheel is turned while engine is running.
- Steering response is opposite to what is normally expected when backing up. Turn bottom of steering wheel in direction you want to go.
- Always move ground speed lever to slow end of range before shifting high-low speed control.
- Stop the engine and remove the key from the ignition before servicing, adjusting, lubricating, cleaning, or unplugging the machine.

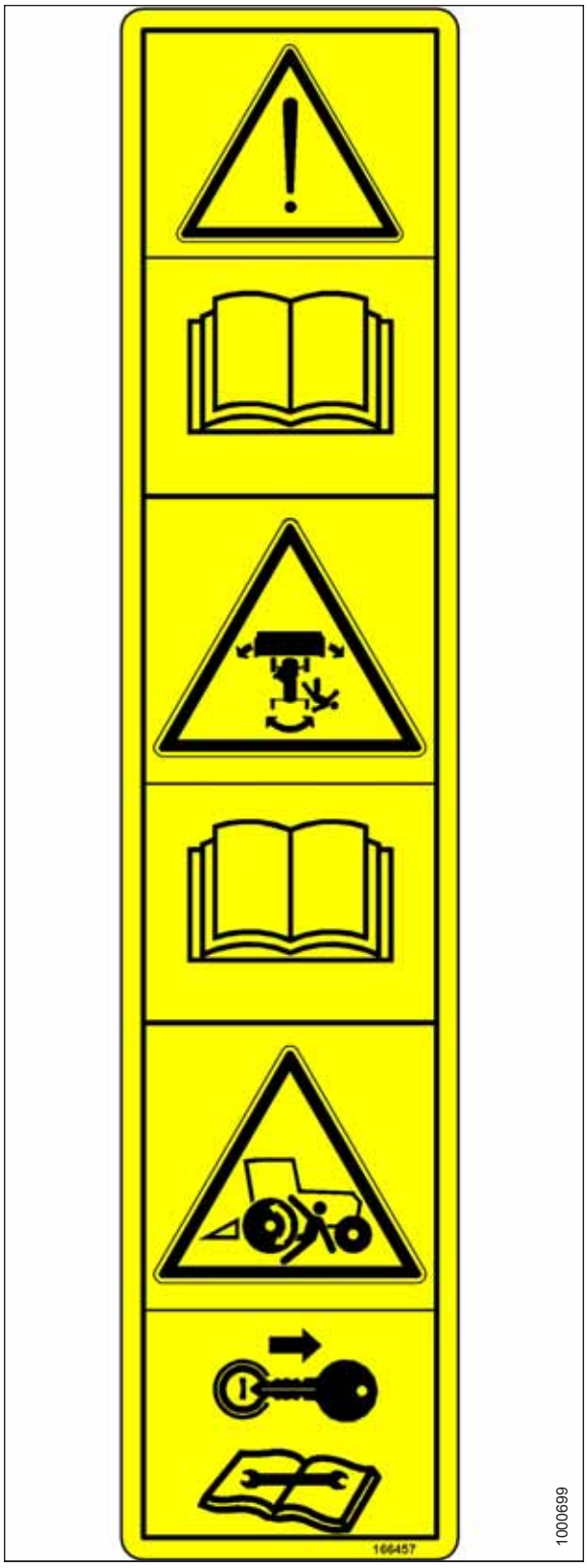

Figure 1.37: MD #166457

MD #166463

Collision hazard in transport

WARNING

- Collision between windrower and other vehicles may result in injury or death.

When driving windrower on public roadways:

- Obey all highway traffic regulations in your area. Use pilot vehicles front and rear of windrower if required by law.
- Use slow moving vehicle emblem and flashing warning lights unless prohibited by law.
- If width of attached header impedes other vehicle traffic, remove header and install MacDon approved weight box. Refer to operator's manual for safe procedure to tow header.



Figure 1.38: MD #166463

MD #166824

Hot fluid under pressure and fluid fill rate

WARNING

- Do **NOT** exceed 11 L/min (3 gpm)
- Coolant is under pressure and may be hot. Never remove radiator cap when engine is hot.



Figure 1.39: MD #166824

MD #166829

Weight balance caution

DANGER

- Weight on the tail wheels should be greater than 1179 kg (2600 lb.) with the windrower positioned in the cab-forward direction.
- Ensure recommended rear ballast kits are installed for proper machine balance. When operating in hilly conditions, additional rear ballast kits may be required.



Figure 1.40: MD #166829

MD #166832

High-pressure oil hazard

WARNING

- Do **NOT** go near leaks.
- High-pressure oil easily punctures skin causing serious injury, gangrene, or death.
- If injured, seek emergency medical help. Immediate surgery is required to remove oil.
- Do **NOT** use finger or skin to check for leaks.
- Lower load or relieve hydraulic pressure before loosening fittings.



Figure 1.41: MD #166832

MD #166834

Run-over hazard

DANGER

- Do **NOT** start engine by shorting across starter or starter relay terminals. Machine will start with drive engaged and move if starting circuitry is bypassed.
- Start engine only from operator's seat. Do **NOT** try to start engine with someone under or near machine.



Figure 1.42: MD #166834

MD #166835

Explosion hazard

WARNING

- Prevent serious bodily injury caused by explosive battery gases.
- Keep sparks and flames away from the battery.
- Refer to operator's manual for battery boosting and charging procedures.



Figure 1.43: MD #166835

MD #166836

Battery acid hazard

WARNING

- Corrosive and poisonous battery acid. Acid can severely burn your body and clothing.



Figure 1.44: MD #166836

MD #166837

Rotating fan hazard

DANGER

- To avoid injury, stop the engine and remove the key before opening engine hood.

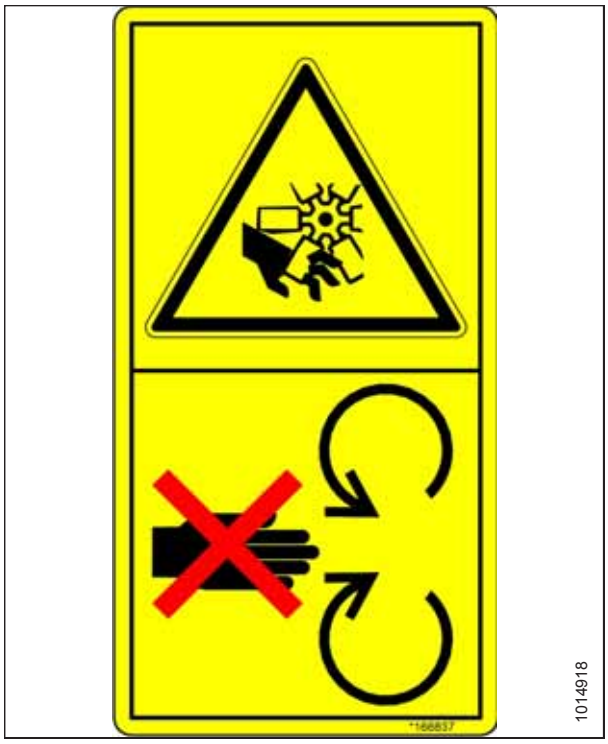

Figure 1.45: MD #166837

MD #166838

Hot surface hazard

WARNING

- To avoid injury, keep a safe distance from hot surface.

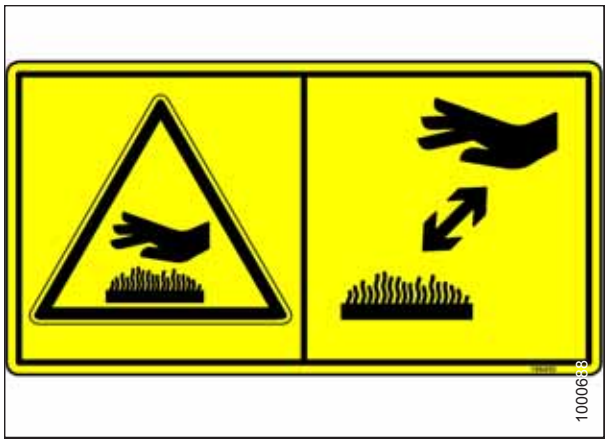

Figure 1.46: MD #166838

MD #166839

Pinch point hazard

WARNING

- To avoid injury, stop the engine and remove the key before opening engine hood.



Figure 1.47: MD #166839

MD #166843

Steering control

WARNING

To avoid serious injury or death from loss of control:

- Do **NOT** make abrupt changes in steering direction.
- Anticipate turns by slowing down well in advance.
- Do **NOT** rapidly accelerate or decelerate while turning.

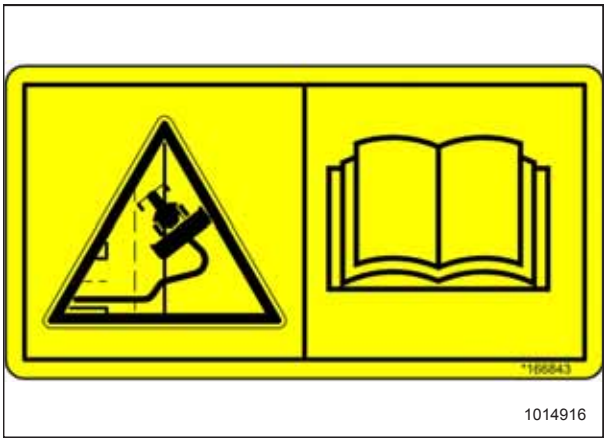

Figure 1.48: MD #166843

MD #167502

Pinch point hazard

WARNING

- To avoid injury, be cautious when opening/closing the training seat to avoid getting pinched.
- Failure to comply could result in death or serious injury.



Figure 1.49: MD #167502

Chapter 2: Product Overview

2.1 Definitions

The following terms and acronyms may be used in this manual:

Term	Definition
A Series header	MacDon A40D, A40DX, and Grass Seed auger headers
API	American Petroleum Institute
ASTM	American Society of Testing and Materials
Bolt	A headed and externally threaded fastener that is designed to be paired with a nut
Cab-forward	Windrower operation with Operator and cab facing in direction of travel
Center-link	A hydraulic cylinder link between header and machine used to change header angle
CGVW	Combined gross vehicle weight
D1X Series	MacDon D115X, D120X, and D125X rigid draper headers for M1 Series Windrowers
D1XL Series	MacDon D130XL, D135XL, D140XL, and D145XL rigid draper headers for M1 Series Windrowers
DDD	Double-draper drive
DEF	Diesel exhaust fluid; also called AdBlue in Europe, and AUS 32 in Australia
DEF Supply Module	Pump that supplies diesel exhaust fluid through system
DM	Dosing module
DK	Double knife
DKD	Double-knife drive
DOC	Diesel oxidation catalyst
DRT	Aftertreatment decomposition tube
DWA	Double Windrow Attachment
ECM	Engine control module
EEC	Eco engine control
Engine-forward	Windrower operation with Operator and engine facing in direction of travel
FFFT	Flats from finger tight
Finger tight	Finger tight is a reference position where sealing surfaces or components are making contact with each other, and fitting has been tightened to a point where fitting is no longer loose
GSL	Ground speed lever
GSS	Grass Seed
GVW	Gross vehicle weight
Hard joint	A joint made with use of a fastener where joining materials are highly incompressible
Header	A machine that cuts and lays crop into a windrow and is attached to a windrower
Hex key	A tool of hexagonal cross-section used to drive bolts and screws that have a hexagonal socket in head (internal-wrenching hexagon drive); also known as an Allen key and various other synonyms

Term	Definition
HDS	Hydraulic deck shift
hp	Horsepower
HPT display	Harvest Performance Tracker display module on a windrower
JIC	Joint Industrial Council: A standards body that developed standard sizing and shape for original 37° flared fitting
Knife	A cutting device which uses a reciprocating cutter (also called a sickle)
MDS	Mechanical deck shift
M1 Series	MacDon M1170 and M1240 Windrowers
n/a	Not applicable
NPT	National Pipe Thread: A style of fitting used for low-pressure port openings. Threads on NPT fittings are uniquely tapered for an interference fit
Nut	An internally threaded fastener that is designed to be paired with a bolt
ORB	O-ring boss: A style of fitting commonly used in port openings on manifolds, pumps, and motors
ORFS	O-ring face seal: A style of fitting commonly used for connecting hoses and tubes. This style of fitting is also commonly called ORS, which stands for O-ring seal
PARK	The slot opposite the NEUTRAL position on operator's console of M1 Series windrowers
R Series	MacDon R80 and R85 Rotary Disc Headers for windrowers
R1 SP Series	MacDon R113 and R116 Series Rotary Disc Headers for windrowers
+	A directive by the European Union to restrict use of certain hazardous substances (such as hexavalent chromium used in some yellow zinc platings)
rpm	Revolutions per minute
SAE	Society of Automotive Engineers
SCR	Selective catalytic reduction catalyst
Screw	A headed and externally threaded fastener that threads into preformed threads or forms its own thread into a mating part
SDD	Single-draper drive
Self-Propelled (SP) Windrower	Self-propelled machine consisting of a power unit with a header
SK	Single knife
SKD	Single-knife drive
Soft joint	A joint made with use of a fastener where joining materials are compressible or experience relaxation over a period of time
spm	Strokes per minute
Tension	Axial load placed on a bolt or screw, usually measured in Newtons (N) or pounds (lb.)
TFFT	Turns from finger tight
Torque	The product of a force X lever arm length, usually measured in Newton-meters (Nm) or foot-pounds (lbf·ft)
Torque angle	A tightening procedure where fitting is assembled to a precondition (finger tight) and then nut is turned farther a number of degrees to achieve its final position

Term	Definition
Torque-tension	The relationship between assembly torque applied to a piece of hardware and axial load it induces in bolt or screw
ULSD	Ultra-low sulphur diesel
Washer	A thin cylinder with a hole or slot located in the center that is to be used as a spacer, load distribution element, or locking mechanism
Windrower	Power unit of a self-propelled header
WOT	Wide open throttle

2.2 Specifications

Specifications and design are subject to change without notice or obligation to revise previously sold units.

Engine		
Type		Cummins QSB-6.7L CM2350, six cylinder tier 4 final, turbo, diesel, (B20 bio-diesel approved)
Displacement		6.7 L (409 cu.in.)
Power	Rated	185 kW (248 hp) @ 2200 rpm
	Peak	196 kW (263 hp) @ 2000 rpm
Maximum rpm (no load)		2300
Idle rpm		1000
Electrical System		
Battery (2)		12 Volt, maximum dimension – 334 x 188 x 232 mm (13 x 6.81 x 9.43 in.). Group rating 29H or 31A. Heavy duty/off road/ vibration resistant
Minimum CCA per battery (cold cranking amps)		750
Alternator		200 amp
Egress lighting		Standard
Starter		Wet type
Lights	Base cab[1]	12 halogen: 4 road, 8 work (2 also used for egress)
Traction Drive		
Type		Hydrostatic, infinitely variable motors via electric shift
Speed	Field	0–29 km/h (18 mph)
	Reverse	9.6 km/h (6 mph)
	Transport	Engine-forward 0–44 km/h (27.5 mph)
Transmission	Type	2 piston pumps – 1 per drive wheel
	Displacement	44 cc (2.65 cu.in.)
	Flow	167 L/min (40 U.S. gpm)
Final drive	Type	Planetary gearbox
	Ratio	27.8 : 1
System Capacities		
Fuel tank		530 L (140 U.S. gallons)
Diesel exhaust fluid tank		28 L (7.5 U.S. gallons)
Coolant		33 L (8.72 U.S. gallons)
Hydraulic reservoir		60 L (15.8 U.S. gallons)

1. High Performance Lighting Package MD #B6051 can be installed on the base cab.

Header Drive		
Knife/disc	Pump	Piston, 105.5 cc (6.44 cu. in.)
	Max pressure	41,369 kPa (6000 psi)
	Flow	0–272.5 L/min (72 gpm)
Reel	Pump	Gear, 25.2 cc (1.54 cu. in.)
	Max pressure	23,993 kPa (3480 psi)
	Flow	75.7 L/min (20 gpm)
Draper	Pump	Gear, 19.3 cc (1.18 cu. in.)
	Max pressure	23,993 kPa (3480 psi)
	Flow	57 L/min (15 gpm)
Charge system	Pump	Gear, 32.4 cc (1.98 cu. in.)
	Max pressure	3.4 MPa (500 psi)
	Flow	44 L/min (25 gpm)
Lift/Fan Drive		
Pump		Piston, 60 cc (3.66 cu. in.)
Max pressure		22,063 kPa (3200 psi)
Flow		0–170.3 L/min (45 gpm)
Header Lift/Tilt		
Type		Hydraulic double acting cylinders
Maximum lift capacity		3810 kg (8400 lb.)
Header Float		
Adjustment		Fully in-cab adjustable
Automatic		Memory for 3 float settings (deck shift positions on draper)
Options		External booster spring (1 or 2 per side)
Base Cab		
Suspension		4 point spring/shock
Dimensions	Width	1767 mm (69.6 in.)
	Depth	1735 mm (68.3 in.)
	Height	1690 mm (66.5 in.)
Seat	Operator	Cloth, adjustable air ride suspension, seat belt
	Training	Cloth, folding, cab mounted, seat belt
Windshield wiper	Front	990 mm (39 in.) blade, washer equipped
	Rear	560 mm (22 in.) blade, washer equipped
Heater		11.10 kW (37,900 Btu/hr)
Air conditioning		8.73 kW (29,800 Btu/hr)
Electrical outlets	12 V DC	6
	USB	2

Mirrors		Two outside (field use), one inside (engine-forward transport)
Radio		Two speakers, antenna, microphone and AM/FM/CD/USB/ Bluetooth® radio factory installed
Sun shades		Front and rear
Deluxe Cab Package (in addition to Base Cab)		
Seat	Operator	Leather, adjustable air ride suspension, seat belt, heated/cooled, lateral isolation, adjustable front cushion
	Training	Leather, folding, cab mounted, seat belt
Mirrors		Two power mirrors outside (field use)
Lights	High Performance Lighting	12 lights: 4 halogen road, 8 LED work lights
System Monitoring		
Display		178 mm (7 in.) LCD
Speeds		Ground (mph or km/h), engine (rpm), knife (spm), reel (rpm or mph / km/h), conveyor (rpm or mph / km/h), cooling fan (rpm)
Pressures		Knife (psi or MPa), reel (psi or MPa), conveyor (psi or MPa), supercharge (psi or MPa)
Header position	Platform	Height, angle, float
	Reel	Height, fore-aft
Engine parameters		Fuel consumption, load
Tire Options		
Drive	Bar	600/65R28
	Turf	580/70R26
Caster	Suspended	16.5L-16.1 with independent suspension
	Mud	11x16 with single sided caster (unsuspended)
Frame and Structure		
Dimensions		Refer to *2.3 Windrower Dimensions, page 35*
Frame to ground (crop clearance)		1160 mm (45.7 in.)
Walking beam maximum width		3856 mm (151.8 in.) with 3422 mm (134.7 in.) crop clearance
Weight[3]	Base[2]	6078 kg (13,400 lb.)
	Max GVW	10,660 kg (23,500 lb.)
	Max CGVW	11,794 kg (26,000 lb.)
Header compatibility	Draper	D1XL Series, D1X Series Draper Header
	Rotary	4.9 m (16 ft.) R85, R113 Rotary Disc Header
	Auger	A40DX Series

2. Weight with 600-65R28 bar tires, no fuel/DEF. Hydraulic oil and coolant included in weight.
3. Weights do not include options.

2.3 Windrower Dimensions

Figure 2.1: Windrower Dimensions

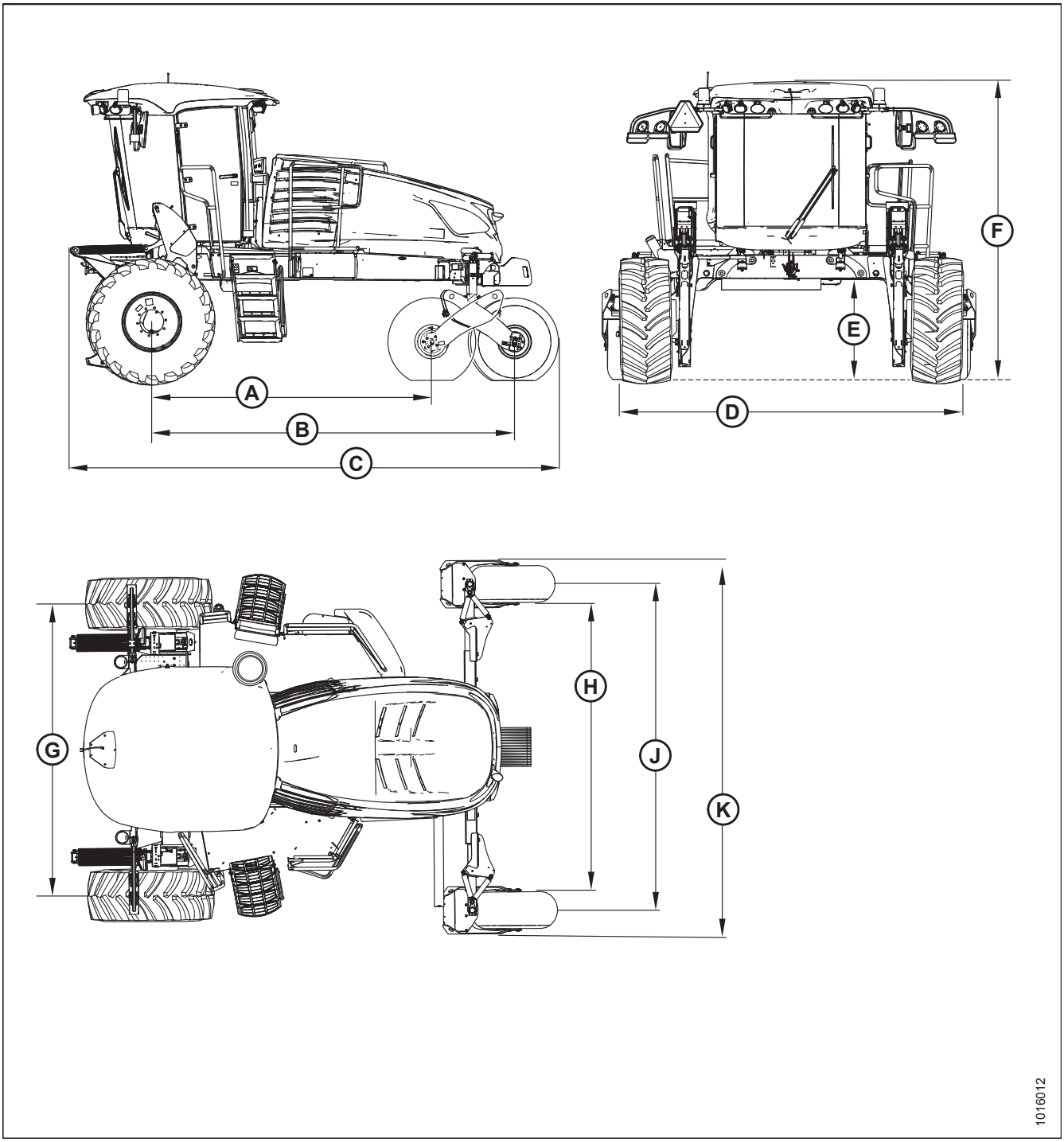

A - 3304 mm (130-3/32 in.)
B - 4290 mm (168-7/8 in.)
C - 5752 mm (226-7/16 in.)
D - 4070 mm (160-1/4 in.)
E - 1160 mm (45-11/16 in.)
F - 3480 mm (137-1/32 in.)
G - 3449 mm (135-13/16 in.)
H - 3422 mm (134-3/4 in.)
J - 3856 mm (151-13/16 in.) (Max)
K - 4415 mm (173-13/16 in.)

2.4 Component Location

Figure 2.2: Front Cab-Forward View

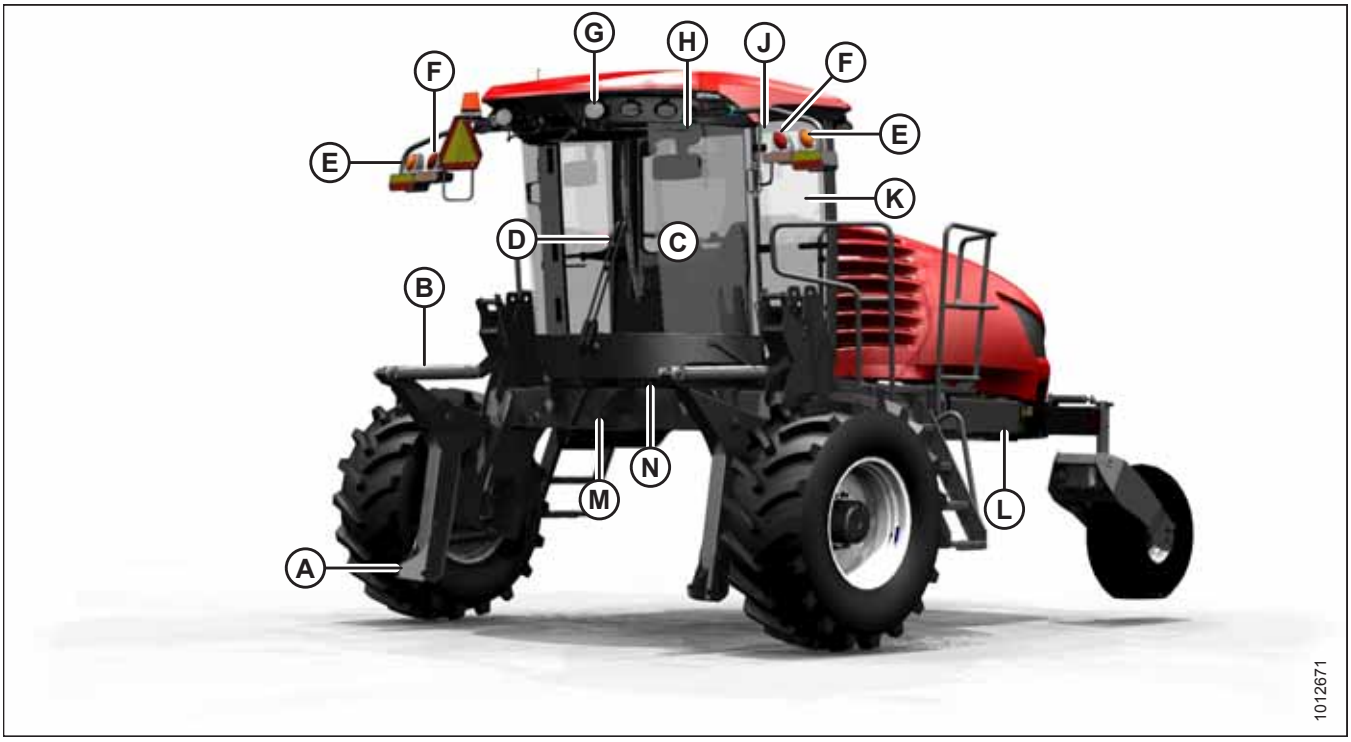

A - Header Lift Leg
B - Header Float Springs
C - Operator's Station
D - Windshield Wiper
E - Turn Signal/Hazard Lights
F - Tail lights Engine-Forward
G - Field/Road Lights[4]
H - Handholds
J - Mirror
K - Door
L - Maintenance Platform
M - Center-Link
N - Horn

4. Standard cabs have halogen lights; deluxe cabs have LED lights.

Figure 2.3: Rear Cab-Forward View



A - Caster Wheel
B - Walking Beam
C - Taillights – Cab-Forward
D - Engine Compartment Hood
E - Windshield Wiper
F - Field Lights[5]
G - Turn Signal/Hazard Lights
H - Field/Road Lights
J - Mirror
K - Door
L - Drive Wheel
M - Maintenance Platform
N - Precleaner
P - Beacons
Q - Anti-Shimmy Dampeners

5. Standard cabs have halogen lights; deluxe cabs have LED lights.

Chapter 3: Operator's Station

The operator's station is designed for operating the windrower in cab-forward mode (working mode) or in engine-forward mode (transport mode). The operator's station, which includes the seat, console, and steering column, pivots 180 degrees so that the Operator maintains access to the windrower controls and gauges regardless of the direction of travel.

3.1 Console

The console contains controls to operate the windrower, as well as amenities for the Operator. The console position is adjustable to suit each particular Operator.

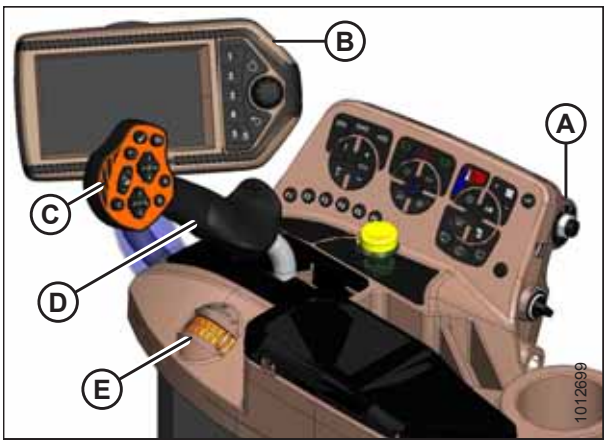

Figure 3.1: Console

A - Ignition **B - Harvest Performance Tracker (HPT) Display**
C - Header Controls **D - Ground Speed Lever (GSL)**
E - Throttle

1. Adjust fore-aft and height as follows:
   a. Pull lever (A) and slide console fore or aft to the desired position.
   b. Release lever to lock console.

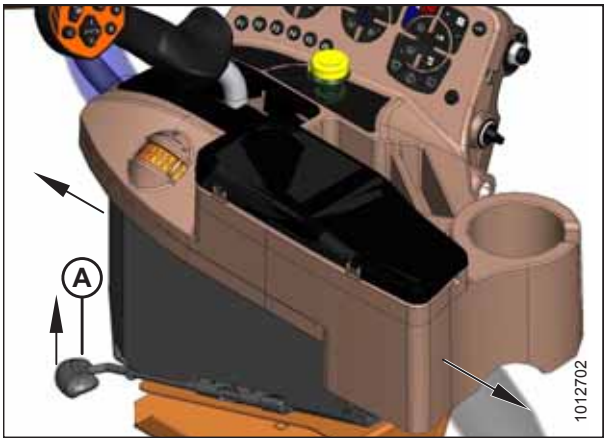

Figure 3.2: Console Fore-Aft/Height

2. Adjust only fore-aft as follows:
   a. Loosen nuts (A) under console.
   b. Move console as required.
   c. Tighten nuts (A).

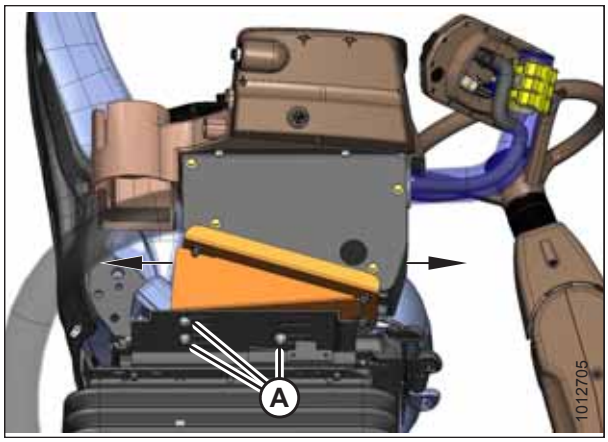

Figure 3.3: Console Fore-Aft

3.2 Operator Presence System

The Operator Presence System is a safety feature designed to deactivate selected systems or sound an alarm when the Operator is not seated at the operator's station.

These systems include:

- Header drive; refer to *3.2.1 Header Drive, page 41*
- Engine and transmission; refer to *3.2.2 Engine and Transmission, page 41*

3.2.1 Header Drive

- Requires the Operator to be in the seat in order to engage the header drive.
- Power is maintained to the header drive for 5 seconds after the Operator leaves the seat, and then the header shuts down.
- After the header has shut down automatically, the HEADER ENGAGE switch must be moved to the OFF position and back to the ON position to restart the header.

3.2.2 Engine and Transmission

- The engine will **NOT** start when the HEADER ENGAGE switch is engaged.
- The engine will shut down when the windrower is moving at 8 km/h (5 mph) or less, and the Operator leaves the seat, and the transmission is not locked in NEUTRAL. The Harvest Performance Tracker (HPT) will display NO OPERATOR DETECTED and ENGINE SHUT DOWN 5...4...3...2...1...0 accompanied by a steady tone. At 0, the engine shuts down.
- If the windrower is moving faster than 8 km/h (5 mph), and the Operator leaves the seat, after 2 seconds an alarm will sound and the HPT will display NO OPERATOR.
- When the seat is in between cab-forward and engine-forward positions, the engine will shut down if the transmission is not locked in the NEUTRAL position. The HPT will display LOCK SEAT BASE until the seat base is locked into position.

3.3 Operator's Seat Adjustments

The operator's seat has several adjustments. Refer to the following sections for a description and the location of each adjustment. Some seat features are only available with the deluxe cab option.

3.3.1 Armrest

Raise armrest for easier access to seat.

Lower armrest after seat belt is buckled.

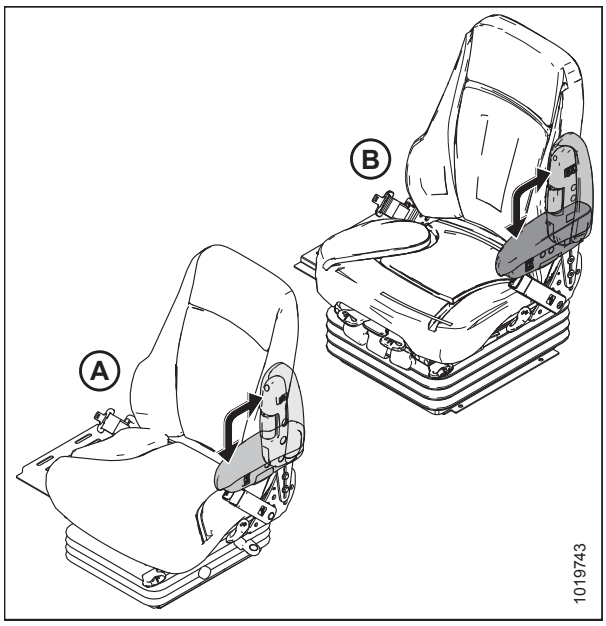

Figure 3.4: Operator's Seat Armrest

A - Standard Seat **B - Deluxe Seat**

3.3.2 Armrest Angle

Use controls to adjust angle of armrest.

- Rotate knob (A) clockwise to increase armrest angle.
- Rotate knob (A) counterclockwise to decrease armrest angle.



Figure 3.5: Operator's Seat Armrest Angle Controls

3.3.3 Suspension and Height

Use controls to adjust the height and stiffness of the seat suspension.

- Press upper switch (A) to increase seat stiffness and height.
- Press lower switch (A) to decrease seat stiffness and height.

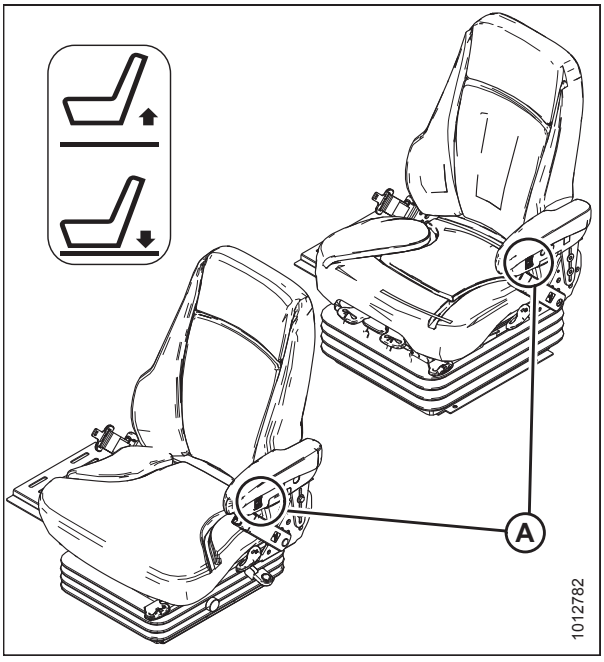

Figure 3.6: Operator's Seat Suspension and Height Controls

3.3.4 Fore-Aft Slide Control

Use controls to adjust the seat's fore-aft position.

1. Pull lever (A) up to release.
2. Move seat forward or rearward.
3. Release lever (A).



Figure 3.7: Operator's Seat Fore-Aft Position Controls

3.3.5 Fore-Aft Isolator Control

Use controls to lock the seat's fore-aft isolator.

- Push lever (A) down to lock
- Pull lever (A) up to unlock

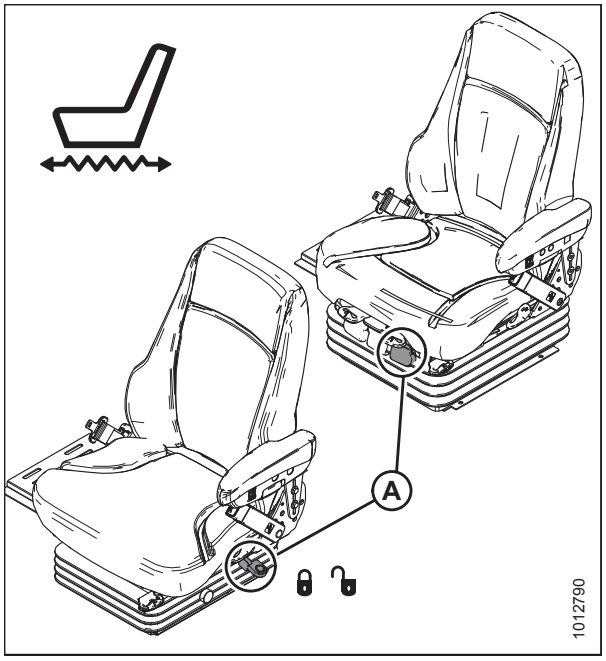

Figure 3.8: Operator's Seat Fore-Aft Isolator Controls

3.3.6 Tilt

Use controls to adjust the seat's tilt.

1. Pull lever (A) up to release.
2. Position seat back as desired.
3. Release lever (A).

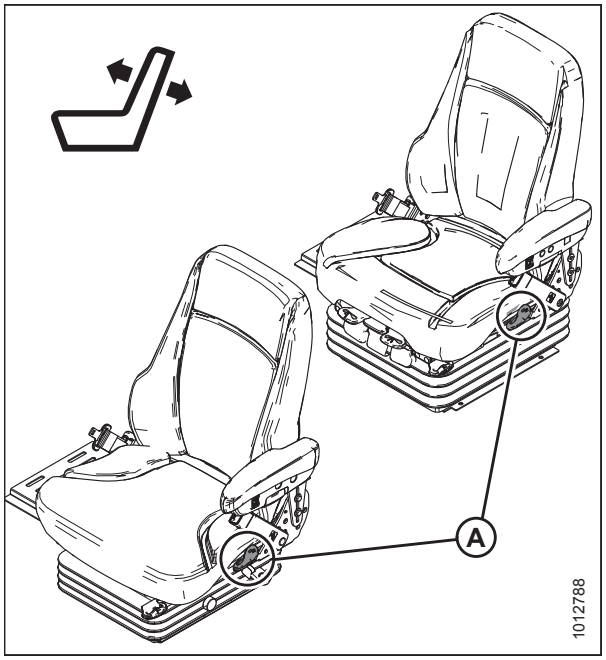

Figure 3.9: Operator's Seat Tilt Controls

3.3.7 Lumbar Support

Use controls to adjusts the stiffness of the seat's back.

- Rotate knob (A) clockwise to increase lumbar support.
- Rotate knob (A) counterclockwise to decrease lumbar support.

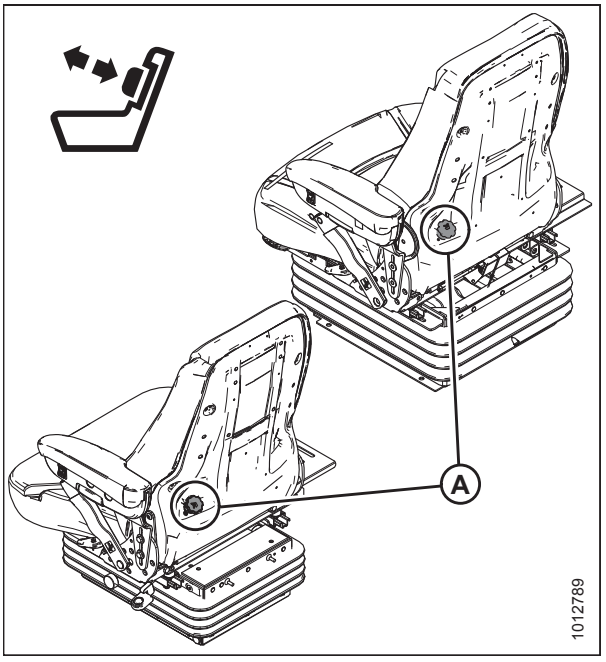

Figure 3.10: Operator's Seat Lumbar Support Controls

3.3.8 Vertical Dampener

Use controls to adjust the seat's vertical suspension dampening.

- Turn knob (A) counterclockwise to increase vertical dampener.
- Turn knob (A) clockwise to decrease vertical dampener.

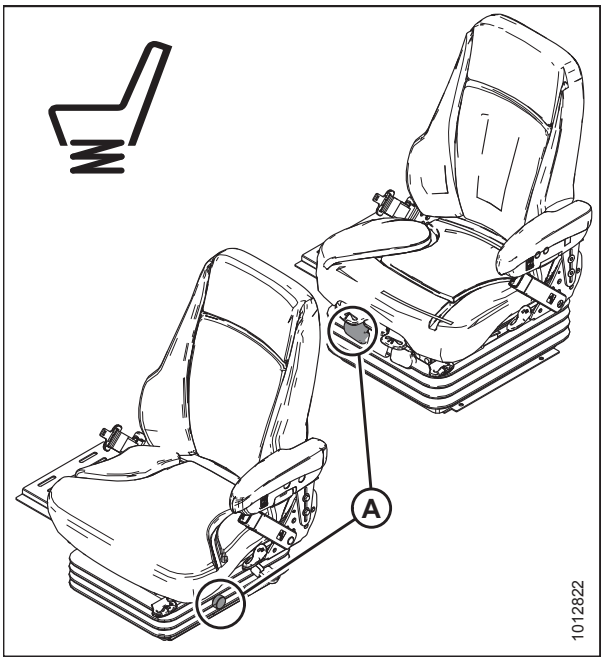

Figure 3.11: Operator's Seat Vertical Dampener Controls

3.3.9 Cushion Tilt – Deluxe Cab Only

Use controls to adjust the deluxe seat's cushion tilt.

1. Pull lever (A) up to release.
2. Tilt seat cushion up or down.
3. Release lever (A).

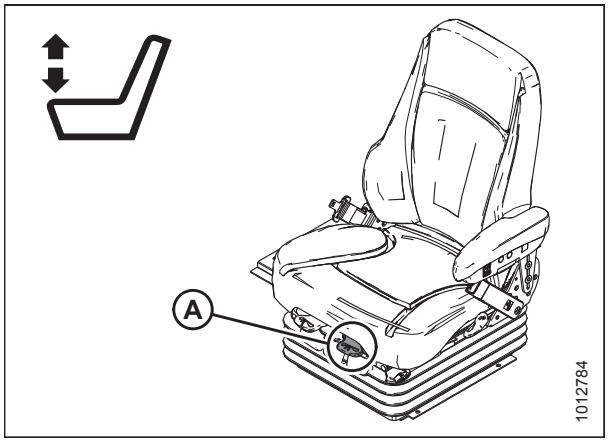

Figure 3.12: Deluxe Seat Cushion Tilt Controls

3.3.10 Cushion Extension – Deluxe Cab Only

Use controls to adjust seat cushion extension fore-aft.

1. Pull lever (A) up to release.
2. Move cushion forward or rearward.
3. Release lever (A).

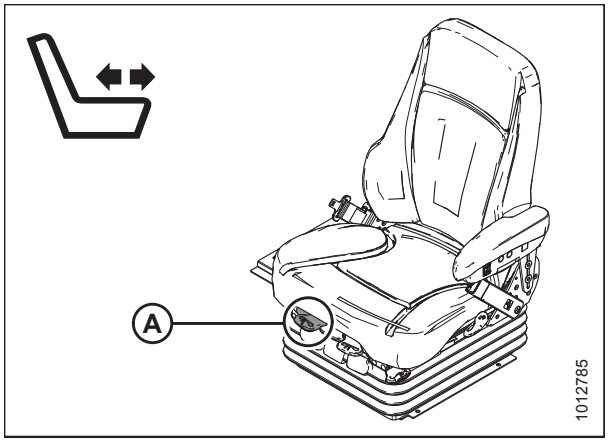

Figure 3.13: Deluxe Seat Cushion Extension Controls

3.3.11 Lateral Isolation Lockout – Deluxe Cab Only

Use the controls (A) to lock or unlock the deluxe seat's lateral isolation lockout.

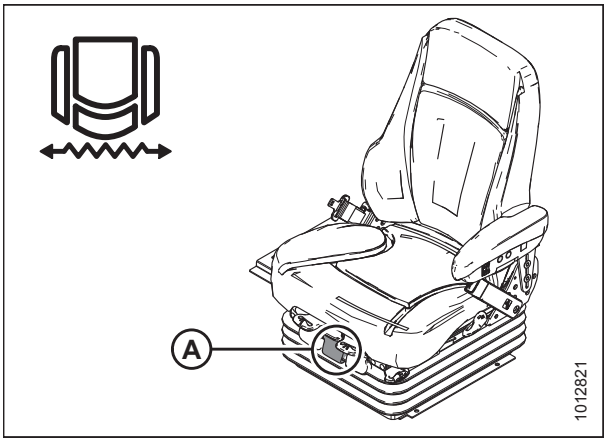

Figure 3.14: Deluxe Seat Lateral Isolation Controls

3.3.12 Heating/Cooling – Deluxe Cab Only

WARNING

- **Do NOT use the seat heating or cooling system if you have a diminished ability to sense temperature, a reduced ability to feel pain, or have sensitive skin. There is a possibility that some people may suffer heat-induced burns or excessive cooling when using the system.**
- **Do NOT place anything on the seat that insulates against heat or cooling, such as a blanket or cushion. These items may cause the seat heating or cooling system to overheat and cause a heat-induced burn to the seat occupant, or damage to the seat itself.**

Use the controls to adjust the heating/cooling of deluxe operator's seat.

Seat heating/cooling switch (A)

- Press switch forward for COOL
- Press switch back for HEAT

Heating/cooling high/low/off switch (B)

- Press switch up for HIGH
- Press switch down for LOW
- Center switch for OFF

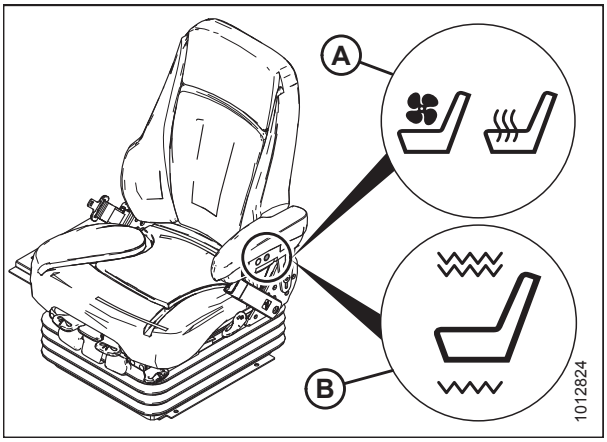

Figure 3.15: Deluxe Seat Heating and Cooling Controls

3.4 Training Seat

A folding wall-mounted training seat (with seat belt) is provided.

WARNING

- **The training seat is provided for use by an experienced machine Operator while training a new Operator.**
- **The training seat is NOT intended as a passenger seat or for use by children. Use the seat belt whenever operating the machine or riding as a Trainer.**
- **Keep all other riders off the machine.**

To store training seat, lift seat and secure with latch (A).

To lower training seat, pull latch (A) and lower seat.

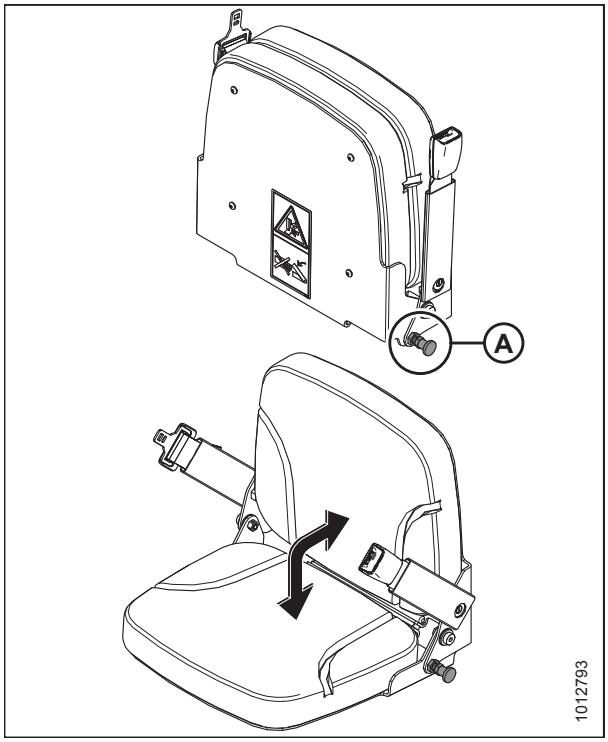

Figure 3.16: Training Seat

3.5 Seat Belts

The windrower is equipped with seat belts on the operator seat and training seat.

WARNING

Seat belts can help ensure your safety when properly used and maintained.

- **Before starting the engine, fasten your seat belt, and ensure that the training seat occupant's seat belt is securely fastened.**
- **Never wear a seat belt loosely or with slack in the belt system. Never wear the belt in a twisted condition or pinched between the seat structural members.**

To fasten seat belt:

1. Pull belt with metal eye (A) at right side completely across your body.
2. Push the metal eye (A) into the buckle (B) until it locks.
3. Adjust the position of the belt as low on your body as possible.

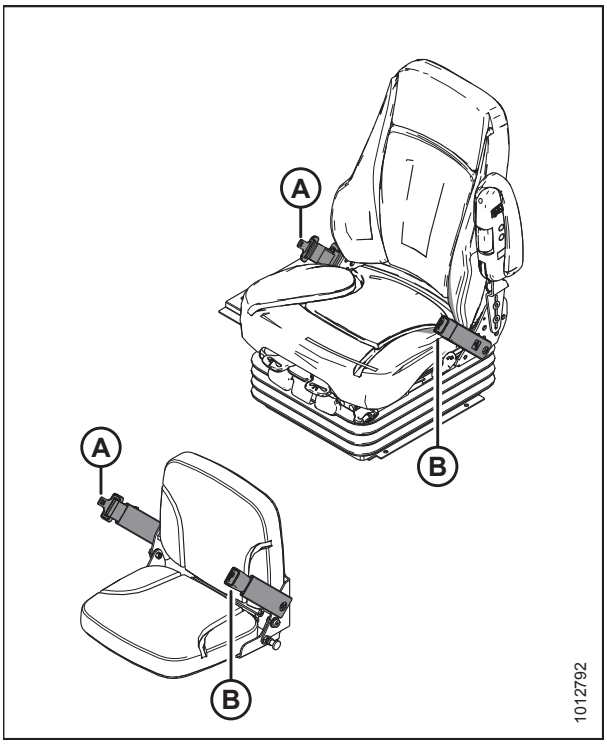

Figure 3.17: Seat Belt

To release seat belt:

1. Push the red button on the end of the buckle (B).
2. Separate the buckle (B) from the metal eye (A).

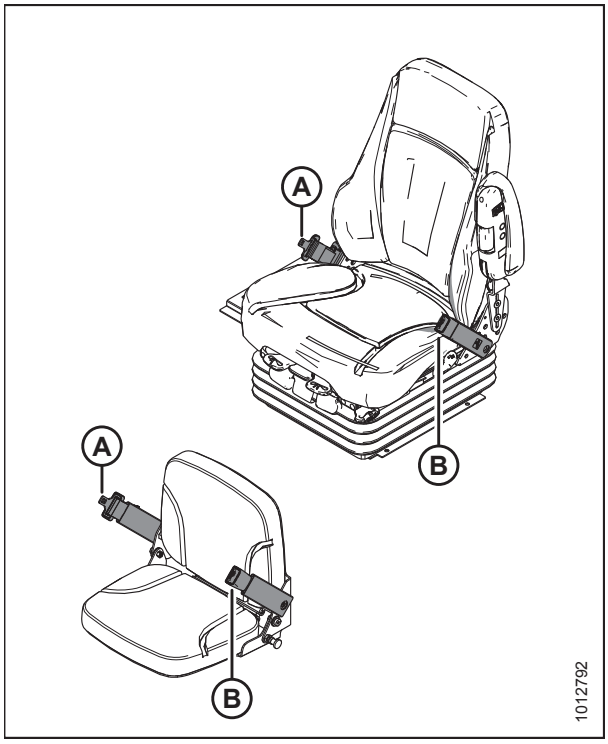

Figure 3.18: Seat Belt

3.6 Adjusting the Steering Column and Steering Wheel

The steering column and steering wheel are adjustable for the operator's comfort and to make it easier to get in and out of the operator's seat.

To adjust the steering column:

1. Hold onto the steering wheel, lift handle (A), and move steering column forward or backward into the desired position.
2. Release handle (A) to lock the steering column in position.

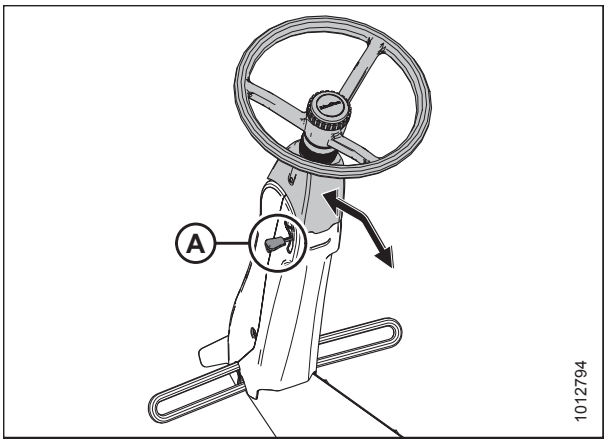

Figure 3.19: Steering Column

To adjust the steering wheel:

1. Hold onto the steering wheel, turn the center cap (A) counterclockwise, and move steering wheel up or down to desired position.
2. Turn center cap clockwise (A) to lock steering wheel in position.

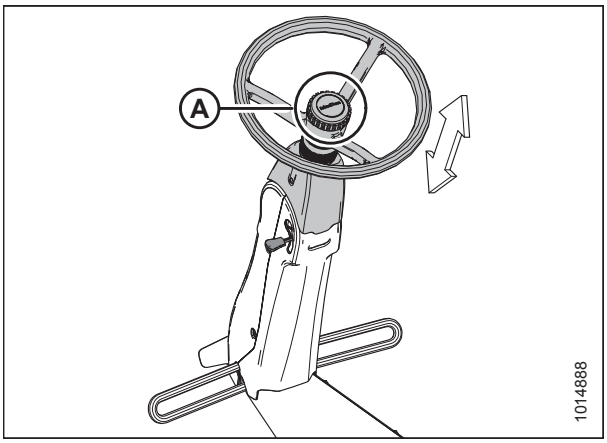

Figure 3.20: Steering Wheel

3.7 Lighting

The field and road light switches are located on the operator's console.

The position of the operator's station (cab-forward or engine-forward) automatically determines which lights are active when the lighting mode is selected.

The field lights (B) do **NOT** turn on when the windrower is in engine-forward mode.

An LED on the switch changes from OFF to amber when the switch is on. The high beam switch has a blue LED that changes from OFF to blue when the switch is on.

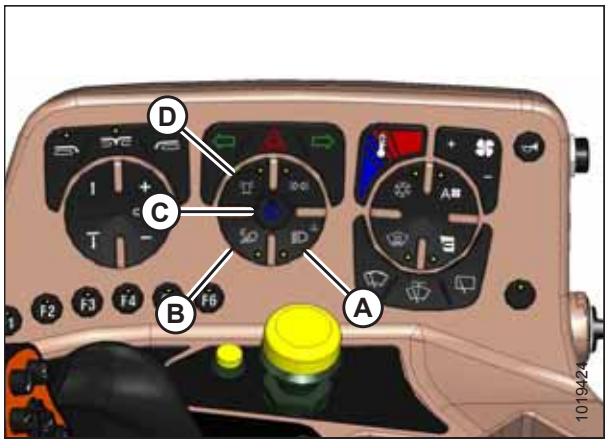

Figure 3.21: Light Switches

A - Road Lights
B - Field Lights
C - Low or High Beams
D - Beacons

3.7.1 Cab-Forward Lighting – Field

The following lights are on when FIELD LIGHT button (A) is selected and the operator's station is locked in cab-forward mode:

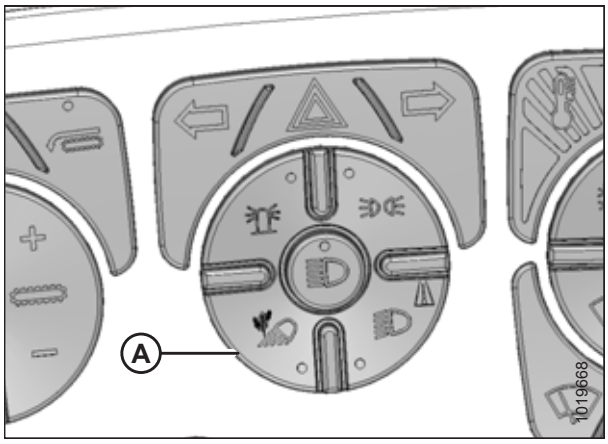

Figure 3.22: Field Light Button

- Cab-forward road lights (A) with low/high beams
- Engine-forward road lights (B) with low/high beams
- Inner work lights (C)
- Outer work lights (D)

  NOTE:

  Work lights (D) are also turned on when the high beams are activated in cab-forward mode.

- Rear roof work lights (E)
- Rear swath lights (F)

  NOTE:

  For adjustment procedures, refer to *Aligning Headlights – Cab-Forward, page 355*.

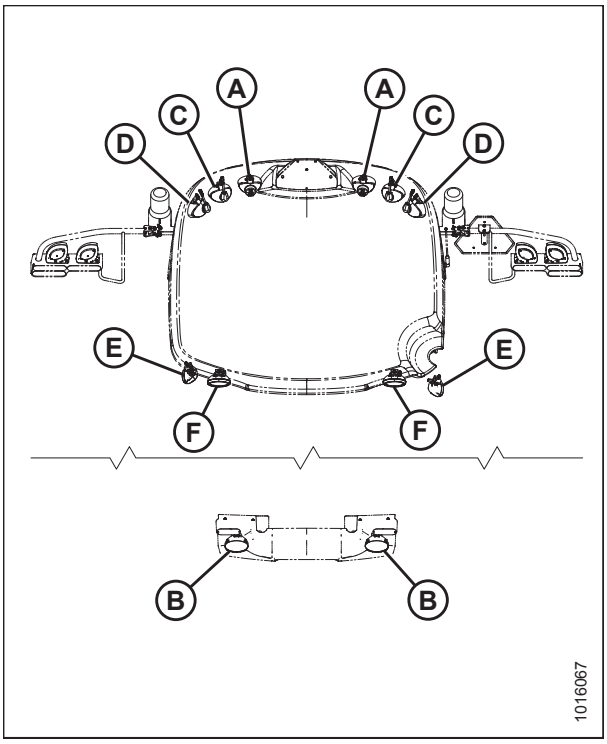

Figure 3.23: Windrower Lighting – Top View

3.7.2 Cab-Forward Lighting – Road

The following lights are functional when the ROAD LIGHT button (A) is selected and the operator's station is locked in the cab-forward mode:

- To toggle between low and high beams, press the HIGH BEAM button (B)
- To operate hazard lights, press HAZARD LIGHT button (C)

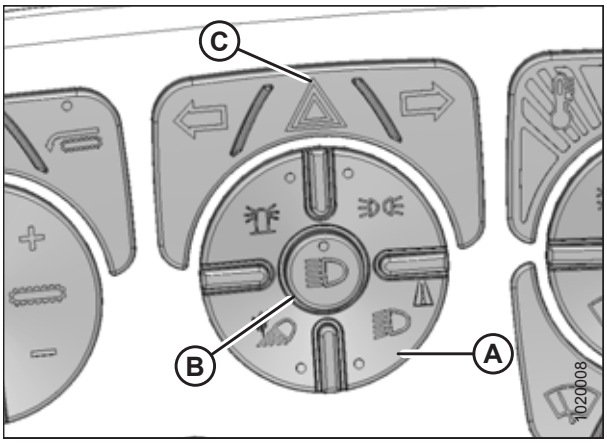

Figure 3.24: Road Light Button

- Headlights (A) with low/high beams
- Red tail lights (B)
- Amber turn signals/hazard lights (C) on mirror supports
- Work lights (D) turn on only when high beams are on in cab-forward mode

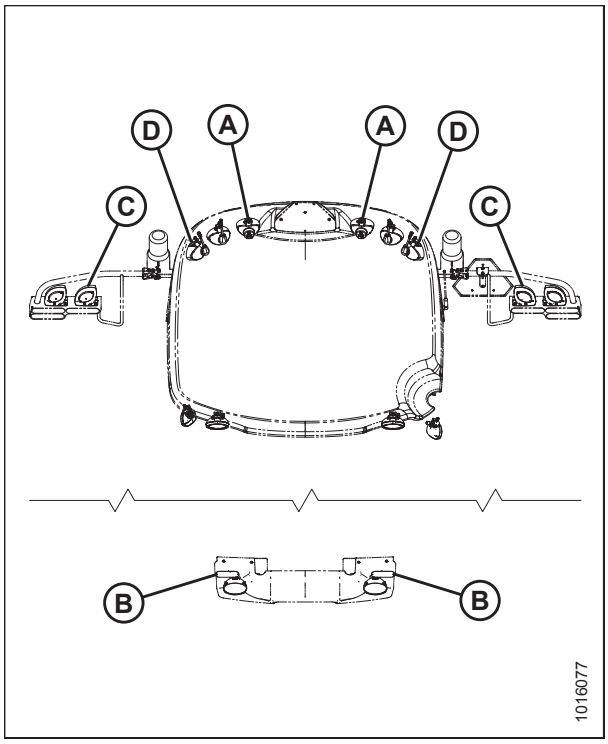

Figure 3.25: Windrower Lighting – Top View

3.7.3 Engine-Forward Lighting – Road

The following lights are functional when the ROAD LIGHT button (A) is pressed and the operator's station is locked in the engine-forward mode.

- To toggle between low and high beams, press the HIGH BEAM button (B)
- To operate hazard lights press HAZARD LIGHT button (C)

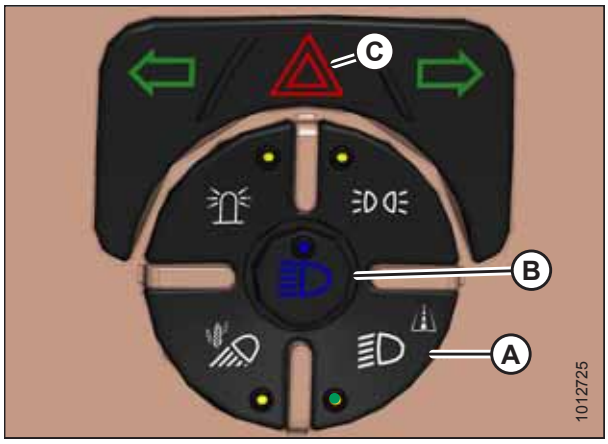

Figure 3.26: Road Light Button

- Engine-forward headlights (A) with low/high beams
- Red taillights (B) on the mirror supports
- Amber turn signals and hazard lights (C) on mirror supports (viewed from the front)
- Work lights (D) turn on only when high beams are activated in engine-forward mode

NOTE:

To align headlights (A), refer to *Aligning Headlights – Engine-Forward, page 354*.

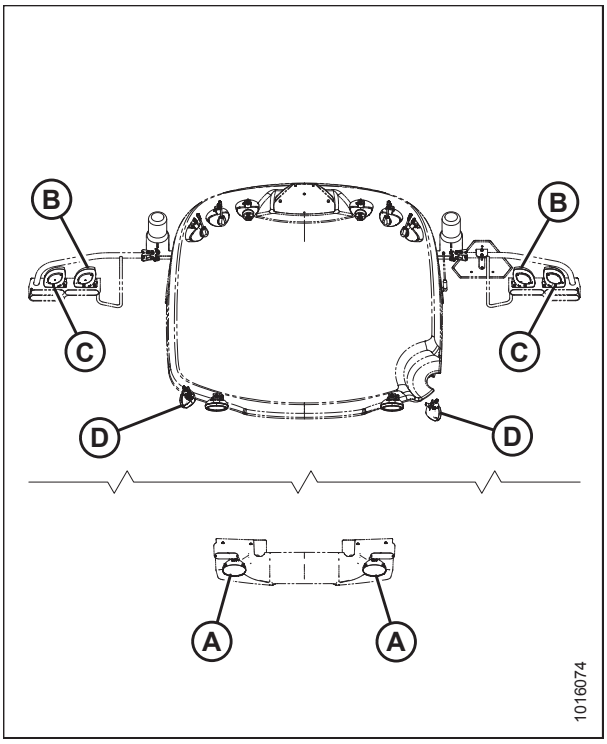

Figure 3.27: Windrower Lighting – Top View

3.7.4 Tail/Beacon Lighting

The beacons (A) are functional when the IGNITION is ON and the BEACON button (B) is selected.

NOTE:

In some areas, the law requires the use of beacon lights when driving on the road.

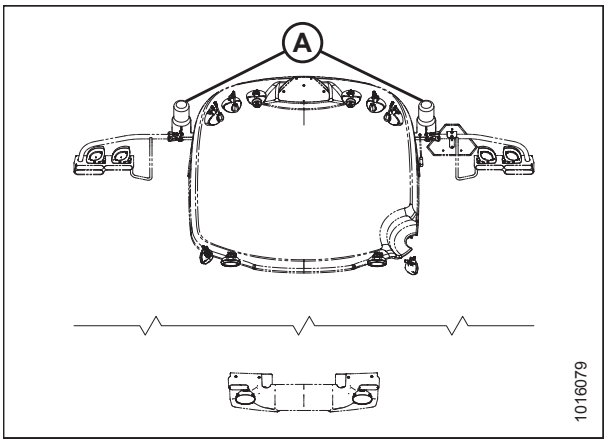

Figure 3.28: Windrower Lighting – Top View

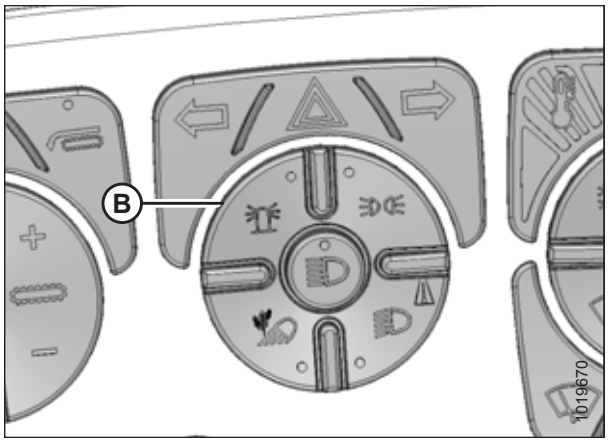

Figure 3.29: Beacon Light Button

3.7.5 Turn Signal / Hazard Lighting

The following lights are on when the LEFT and RIGHT turn signal switches (A) are pressed. Press the switches again to turn the lights off.

- Amber turn signal lights (C) are visible from both front and rear.

NOTE:

Turn signals can also be controlled with the REEL/DISC SPEED switches on the ground speed lever (GSL) when the header is disengaged.

The following lights are on when the HAZARD switch (B) is pressed. Press the switch again to turn the lights off.

- Amber hazard lights (C) which are visible from both front and rear.

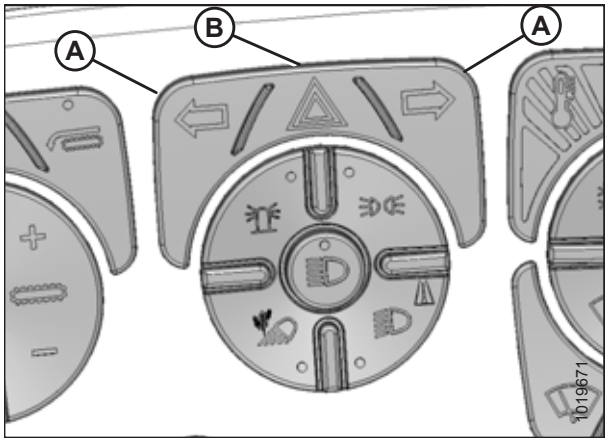

Figure 3.30: Turn Signal/Hazard Button

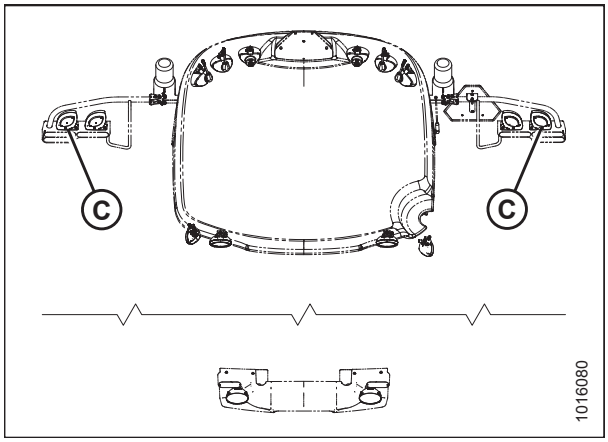

Figure 3.31: Windrower Lighting – Top View

3.8 Windshield Wipers

The windshield wiper controls are located on the console. The illustration shows the controls in cab-forward mode.

Button (A) activates the front (cab-forward) wiper, and button (B) activates the rear wiper.

One window washer button (C) applies washer fluid to both the front and rear wipers as follows:

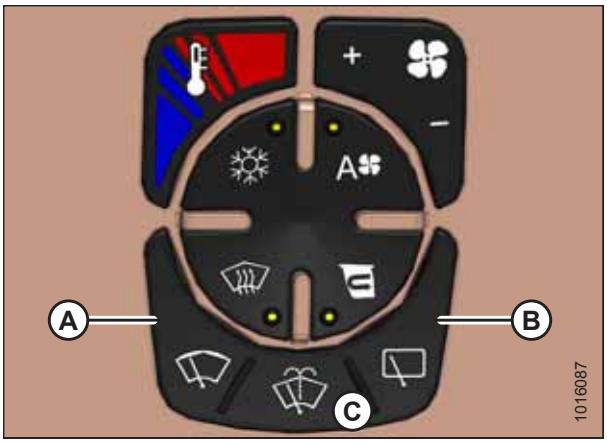

Figure 3.32: Wiper Controls

- If both wipers are on, pressing and holding the window washer button (C) will spray washer fluid onto both windows. When the button is released, the washer fluid stops, but both wipers continue to operate.
- If both wipers are NOT on, pressing and holding the window washer button (C) will spray washer fluid onto both windows, and both wipers will turn on. When the button is released, the washer fluid stops, but both wipers continue to operate for 4 seconds before automatically stopping.
- If only one wiper is on, pressing and holding the window washer button (C) will activate the other wiper and spray washer fluid onto both windows. When the button is released, the washer fluid stops, and the active wiper will continue to operate while the activated wiper operates for only 4 seconds before automatically stopping.

You can aim the rear wiper washer nozzle (A) by turning it with a flat head screwdriver.

NOTE:

The front wiper washer nozzle is nonadjustable.

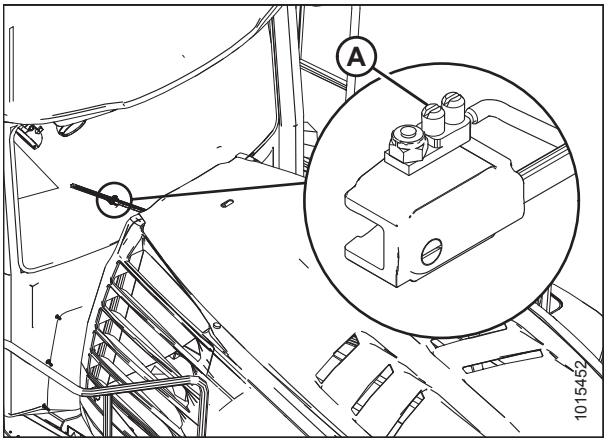

Figure 3.33: Rear Wiper Washer Nozzle

3.9 Rear View Mirrors

Two outside-mounted adjustable mirrors (A) provide a rear view when the windrower is in cab-forward mode.

A single interior-mounted mirror (B) provides a rear view in the engine-forward mode.

The mirror/light assemblies (A) are designed to fold back if accidentally struck.

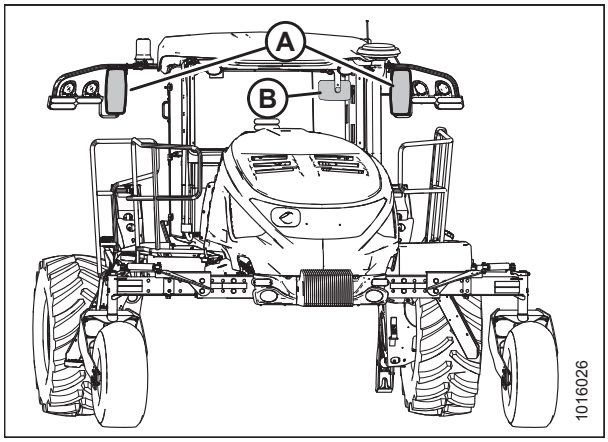

Figure 3.34: Mirrors

The deluxe cab is equipped with power adjustable exterior mirrors which can be adjusted using knob (A) located next to the radio inside the cab.

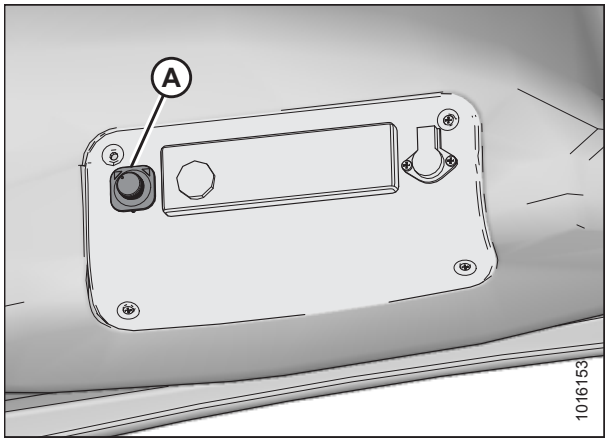

Figure 3.35: Mirror Adjustment Knob

3.10 Cab Temperature

The cab environment is controlled by a climate control system that provides clean air-conditioned or heated air.

The heater/evaporator/blower assembly is located under the cab floor and is accessible from beneath the windrower.

3.10.1 Heater Shut-Off Valve

A shut-off valve (A) at the engine allows the cab heater to be isolated from the engine coolant.

The valve must be open to provide heat to the cab, but can be closed for maximum cooling.

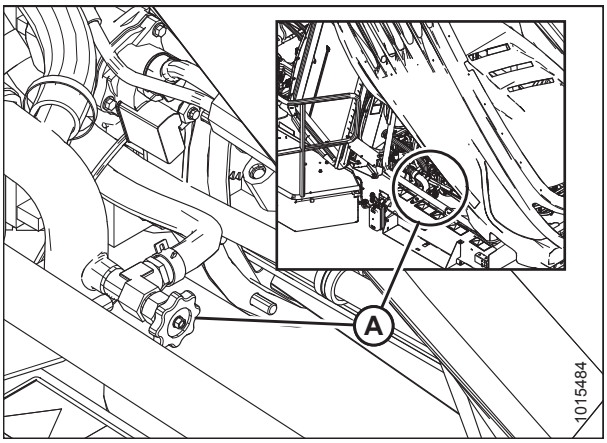

Figure 3.36: Heater Shut-Off Valve

3.10.2 Air Distribution

Cab air distribution is controlled through adjustable air vents (A) located in the cab posts.

You can adjust the vent to open/close (B) or to change the direction (C) of the air flow.

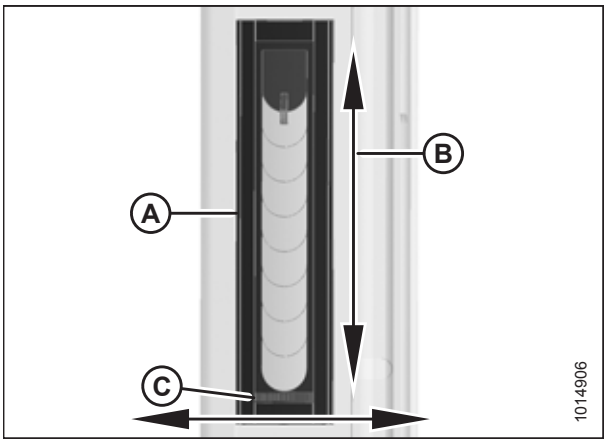

Figure 3.37: Adjustable Air Vents

3.10.3 Climate Controls

NOTE:

When switches (A), (C), (D), and (E) are activated the LED light on the switch will turn amber.

Auto fan speed switch (A)

Sets the climate control system to auto mode, which automatically adjusts the fan speed to maintain the set-point temperature.

Blower control toggle switch (B)

Controls the blower speed. Overrides auto fan control.

- Press + for more air flow
- Press – for less air flow

Recirculating air switch (C)

Controls the air source; stops booster fan so cab air is recirculated.

Windshield defog/defrost switch (D)

The windshield defog/defrost operates with the A/C switch (E) ON.

Air conditioning (A/C) switch (E)

Controls the A/C system.

The A/C operates with the blower switch ON and blower speed is set above 0.

Temperature control toggle switch (F)

Controls cab temperature.

- Press red (top) area to increase cab temperature.
- Press blue (bottom) area to decrease cab temperature.

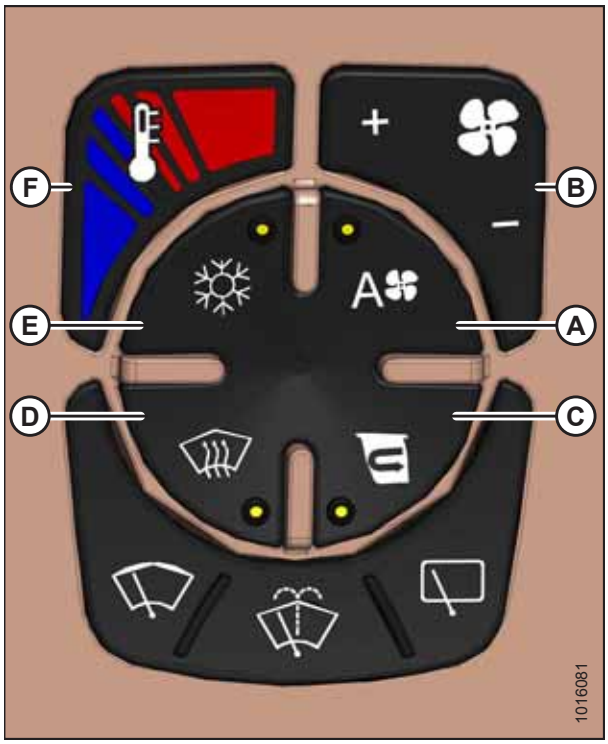

Figure 3.38: Climate Controls

IMPORTANT:

When starting the windrower after more than one week of storage, it may be necessary to distribute the refrigerant oil throughout the A/C system. Refer to *Air Conditioning Compressor Coolant Cycling, page 111*.

3.11 Operator Amenities

The operator's station includes the following amenities:

Operator's console

- Auxiliary power outlets (A)
- USB jack (B)
- Utility tray under armrest (C)
- Utility tray (D)
- Cup holder (E)

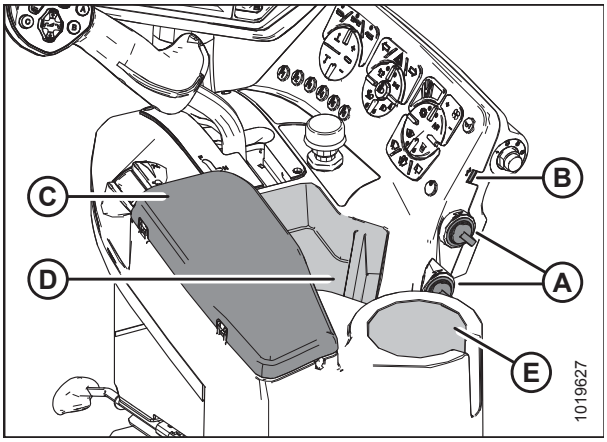

Figure 3.39: Console

Window shades

Retractable window shades (A) are located at the front and rear windows.

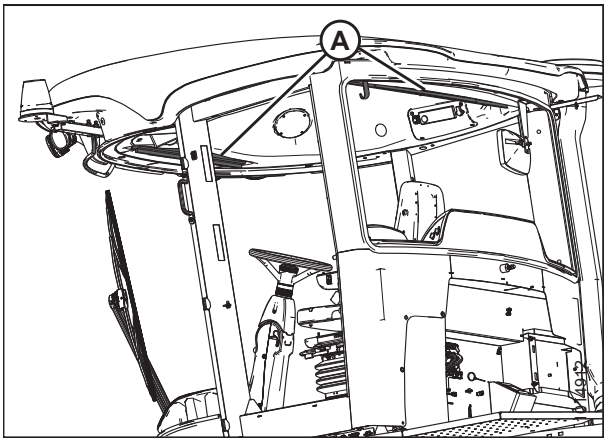

Figure 3.40: Window Shades

Manual storage

A plastic case (A) is located behind the training seat to store the windrower manuals.

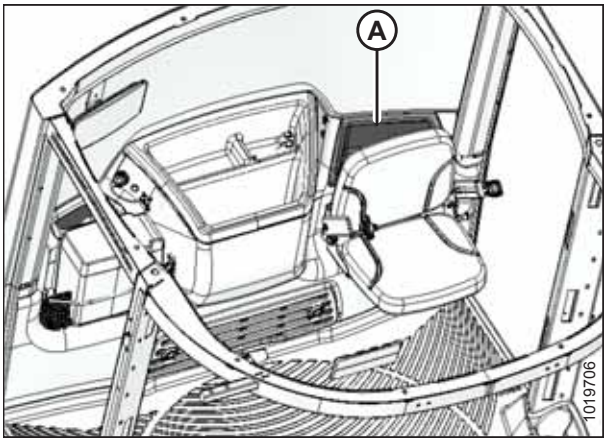

Figure 3.41: Manual Storage Location

Coat hook

A coat hook (A) is located above the training seat, to the left of the Operator.

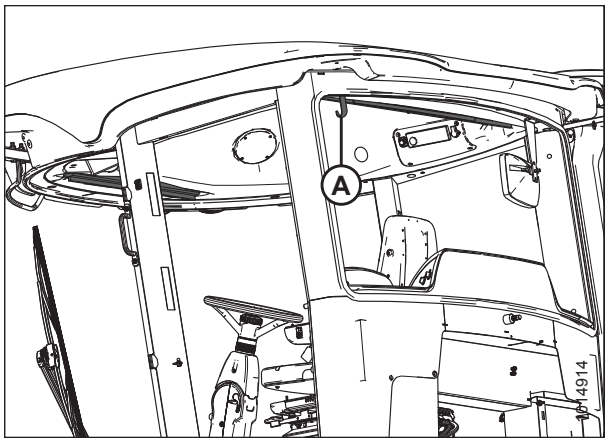

Figure 3.42: Coat Hook

3.12 Radio

The M1240 Windrower comes equipped with an AM/FM/CD/USB/Bluetooth® radio. The following procedures describe how to activate and pair Bluetooth® devices with the radio.

3.12.1 AM/FM/CD/USB Radio with Bluetooth® Wireless Technology

A radio (A) and two speakers (B) are factory-installed in the cab headliner. The radio operates in AM, FM, CD, and USB modes. It also supports Bluetooth® wireless technology audio streaming and hands-free calling. Refer to the operating instructions supplied with the radio.

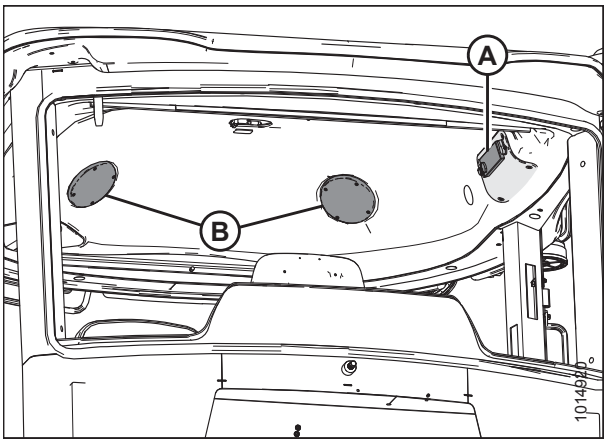

Figure 3.43: Radio and Speakers

To locate the operating instructions for the radio, follow this procedure:

1. Turn the latch (A) to unlock the relay module cover (B).
2. Retrieve the operating instructions for the radio from the relay module cover (B) access panel in the cab roof liner.

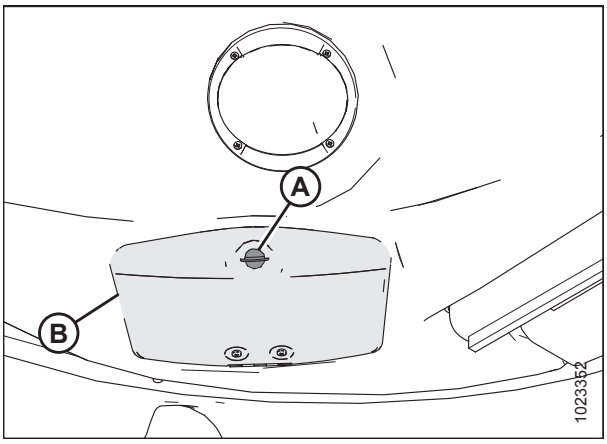

Figure 3.44: Relay Module Cover

3. When finished with the radio manual, place the manual in the manual storage case (A) located behind the training seat.

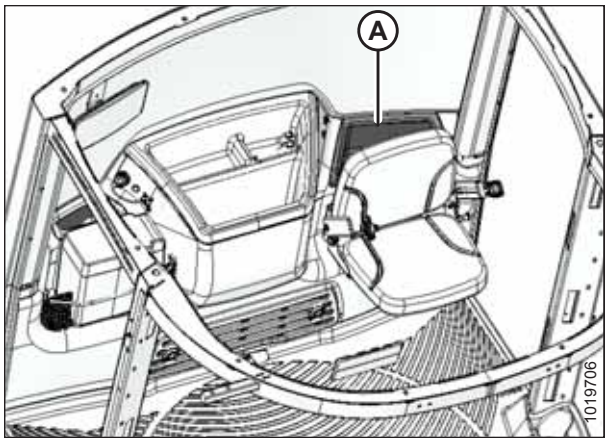

Figure 3.45: Manual Storage Location

4. Close the relay module cover (B) and turn latch (A) to lock it.

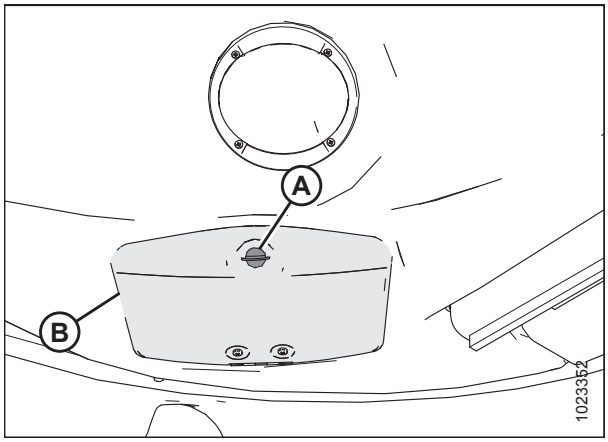

Figure 3.46: Relay Module Cover

Activating Bluetooth® Feature

The Bluetooth® feature must be activated to allow mobile device pairing.

To activate the Bluetooth® feature, follow this procedure:

1. Press POWER button (A) to turn the radio on.
2. Press and hold VOL/SEL knob (B) for 2 seconds. MENU is displayed on screen (C).
3. Rotate VOL/SEL knob (B) to highlight BT SET menu and press the VOL/SEL knob to select. BLUETOOTH ON/OFF is displayed (C).
4. Press VOL/SEL knob (B) to select BLUETOOTH.
5. Rotate VOL/SEL knob (B) to display ON and press VOL/SEL knob (B) to select.
6. Rotate VOL/SEL knob (B) and select DISCOVER.
7. Rotate VOL/SEL knob (B) to display ON and press VOL/SEL to select.

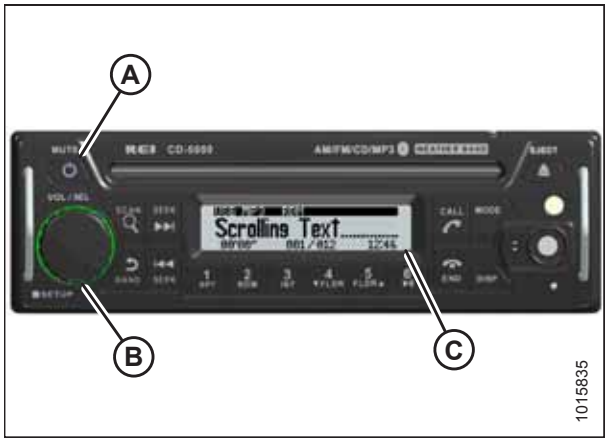

Figure 3.47: Bluetooth® Radio

Pairing a Bluetooth® Device

The installed radio allows the operator to pair a Bluetooth® phone or audio device. Before proceeding, check that Bluetooth® is enabled and radio has been set to DISCOVER mode. Refer to *Activating Bluetooth® Feature, page 64*.

To pair a mobile device, follow this procedure:

1. Press POWER button (A) to turn radio ON.

   This will set the radio to Bluetooth® discover mode if the Bluetooth® feature has been activated.

2. Turn the mobile device's Bluetooth® to ON. Refer to the device's operator's manual. The radio appears as a discoverable device.

3. Select CD-5000 BT on the mobile device to connect.

   NOTE:

   A passkey is required to connect to the Bluetooth® radio. The default passkey is four zeros (0000).

4. Enter the default passkey 0000. The radio will display CONNECTED (B) and the Bluetooth® icon (C) appears in the upper right corner of the screen.

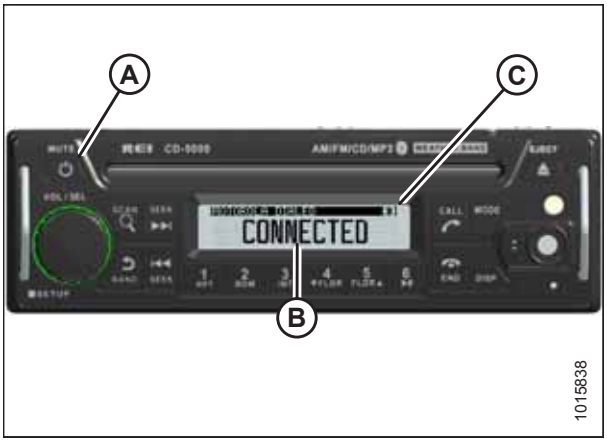

Figure 3.48: Radio Display

3.13 Horn

The horn is activated by pushing button (A) located on the console.

Sound the horn three times prior to starting the engine.

The horn is located under the front left corner of the cab floor when facing cab-forward.



Figure 3.49: Console

3.14 Engine Controls

The following engine controls are conveniently located on the operator's console.

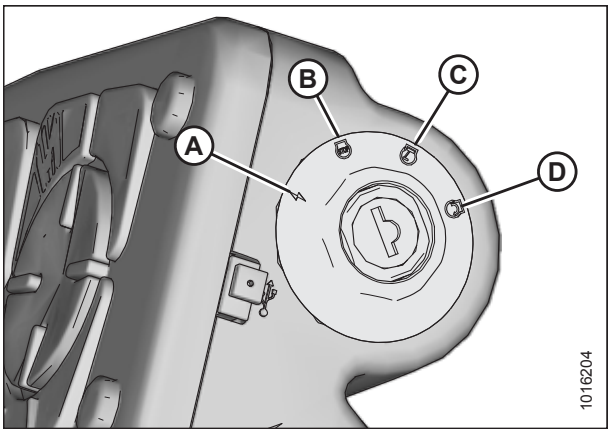

Figure 3.50: Ignition Switch on Operator's Console

Ignition switch

- ACC (A): The windrower's electrical accessories are turned ON without starting the engine
- OFF (B): All electrical systems OFF
- RUN (C): Engine run position
- START (D): Turn fully clockwise to crank engine, and release to return switch to RUN position.

IMPORTANT:

Remove ignition key when windrower is not in use. The ignition key also locks the doors and tool box in the left platform.

Throttle (A)

Controls engine speed range

- MAX: Push lever forward
- MIN: Pull lever back

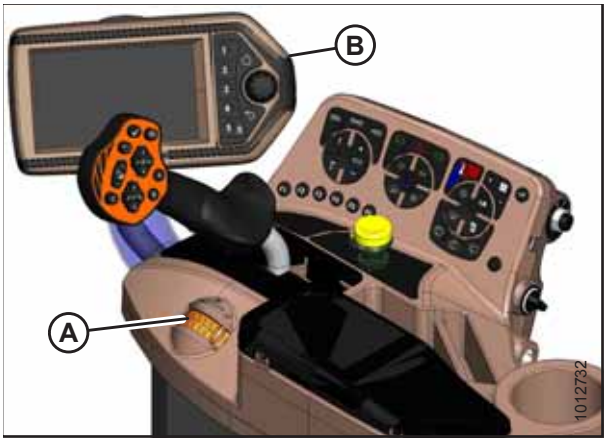

Figure 3.51: Engine Controls

Harvest Performance Tracker display (B)

- Fuel level monitoring
- DEF level monitoring
- High exhaust system temperature indicator (HEST)
- Exhaust system cleaning inhibit and forced indicator
- Speed monitoring (ground, engine, knife/disc, reel, conveyor, and cooling fan)
- Pressure monitoring (knife, reel, conveyor, and supercharge)
- Engine parameters (coolant temperature, fuel consumption, and engine load)
- Header position

For more information on the Harvest Performance Tracker, refer to *3.17 Harvest Performance Tracker Display, page 77*.

3.14.1 Using Eco Engine Control

Eco Engine Control (EEC) is useful in lighter crop conditions that do not require the maximum engine rpm. The reduced engine speed lowers fuel consumption, noise levels, and exhaust emissions in addition to reducing engine wear.

The EEC limits the engine to 1900–2200 rpm when the header is engaged, and is adjustable in 100 rpm increments. Activate this feature by using the EEC button (A) on the operator's console. The EEC symbol will display on the Harvest Performance Tracker (HPT) screen over the right side of the tachometer.

The EEC feature will only be active when the header is engaged, but can be adjusted without the header running. When the header is disengaged, EEC will be canceled and engine rpm will return to the setting determined by the throttle.

Use the QuickMenu to adjust EEC rpm. Refer to *QuickMenu System, page 82*.

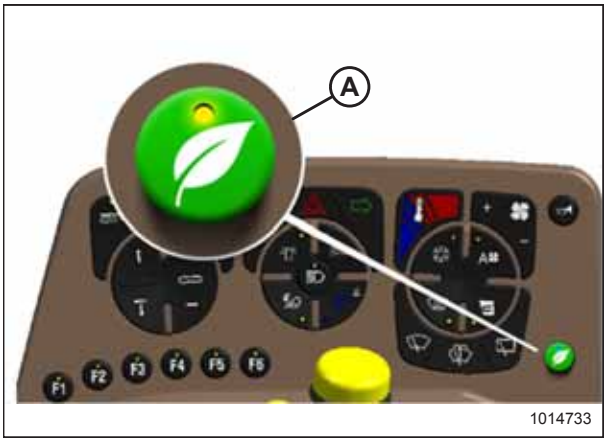

Figure 3.52: Eco Engine Control (EEC)

3.15 Windrower Controls

Console controls:

Turn signals (A) – Activates turn signals on windrower and header.

- Push-ON/Push-OFF (activating the hazard switch also cancels the turn signal)

Ground speed lever (GSL) (B) – Controls speed and direction of movement.

- F: Forward
- N: NEUTRAL
- PARK: Engages neutral interlock, and applies park brake when steering locked in center
- R: Reverse

Hazard warning lights (C) – Activates signals on windrower and header.

- Push-ON / Push-OFF

PARK (D) – Engages neutral interlock, and applies park brake when steering locked in center.

Horn (E)

Autosteer engagement button (F) – Engages/disengages the automated steering system (if installed).

- ENGAGE: Click to engage
- DISENGAGE: Turn steering wheel to disengage

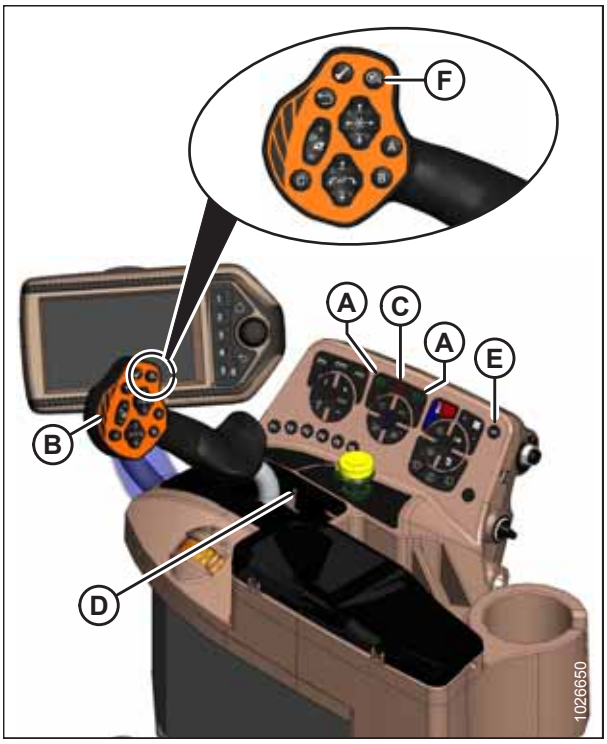

Figure 3.53: Console Controls and Autosteer

3.16 Header Controls

All header controls are conveniently located on the operator's console and on the ground speed lever (GSL) handle.

NOTE:

Some controls are optional equipment and may not be present in your unit. Some controls may be installed, but are not functional for certain headers.

Refer to specific header sections in this manual for detailed operating procedures for all header controls.

3.16.1 Header Engage Switch

The header engage switch (A) engages and disengages the header drive.

To engage header: Push and hold HEADER ENGAGE switch (A) down while pulling up on the collar (B).

To disengage header: Push HEADER ENGAGE switch (A) down.

NOTE:

Although not required, it is good practice to move the throttle lever back to IDLE before engaging header drive.

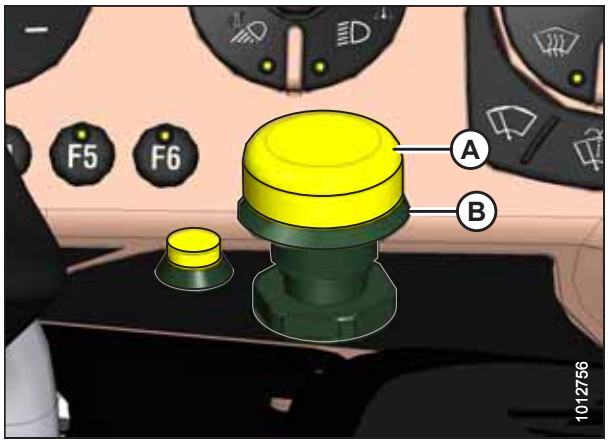

Figure 3.54: Header Engage Switch

3.16.2 Header Drive Reverse Button

NOTE:

The following header systems have reverse capability:

- D1XL Series Draper Headers: knife
- D1X Series Draper Headers: knife
- R85 Rotary Disc Headers: conditioner and discs
- A40DX Auger Headers: knife, conditioner, auger and reel
- A40DX GSS Auger Headers: knife, auger and reel

Reverse header systems as follows:

- ***Engage***: Push and hold reverser button (B) and engage header with switch (A).
- ***Disengage***: Release reverser button (B).

NOTE:

To re-engage in forward operation, push switch (A) down and then up again.

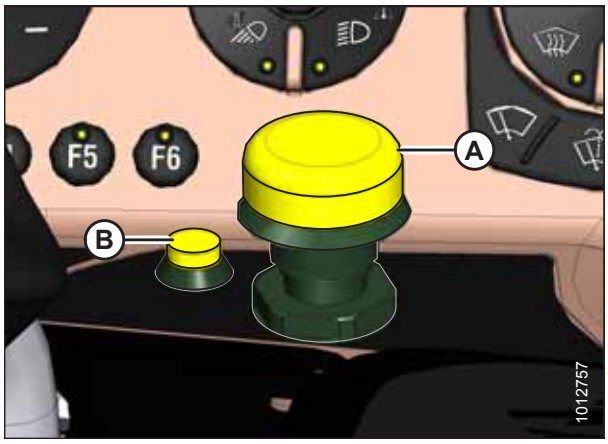

Figure 3.55: Header Drive Controls

3.16.3 Ground Speed Lever Switches

The switches on the Ground Speed Lever (GSL) (A) control the most common header functions.



Figure 3.56: Ground Speed Lever (GSL)

GSL controls — front

- One-Touch-Return position switch (A)
- One-Touch-Return position switch (B)
- One-Touch-Return position switch (C)
- Reel or disc speed (D) (also operates turn signals when header disengaged)
- Reel position (E)
- Autosteer engagement (F) (if equipped)
- Header position (G)
- Back switch (H) – controls Harvest Performance Tracker (HPT) functions
- Select switch (J) – controls HPT functions

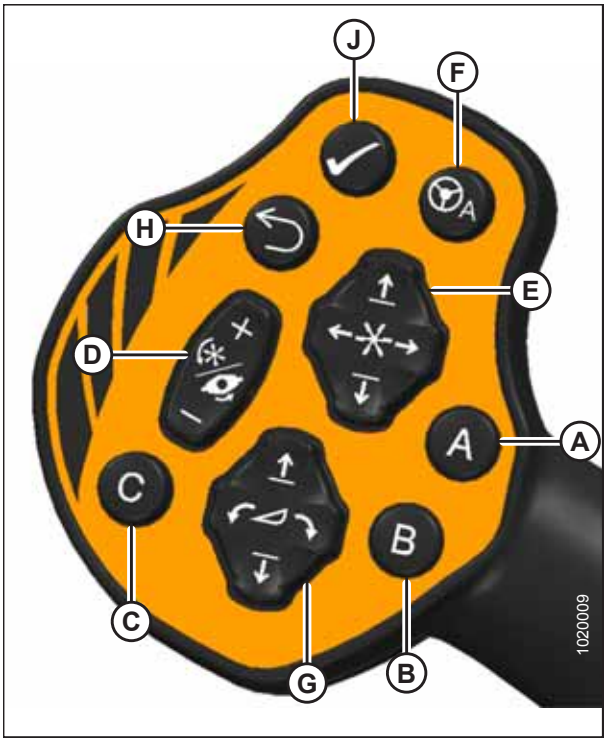

Figure 3.57: GSL Function Groups

GSL controls — rear

- Shift switch (A)
- Scroll wheel (B)

NOTE:

When the shift switch is used with another button it performs the following shortcut functions:

- SHIFT + BACK – Home page
- SHIFT + SELECT – Main menu access
- SHIFT + SCROLL – Adjust maximum ground speed

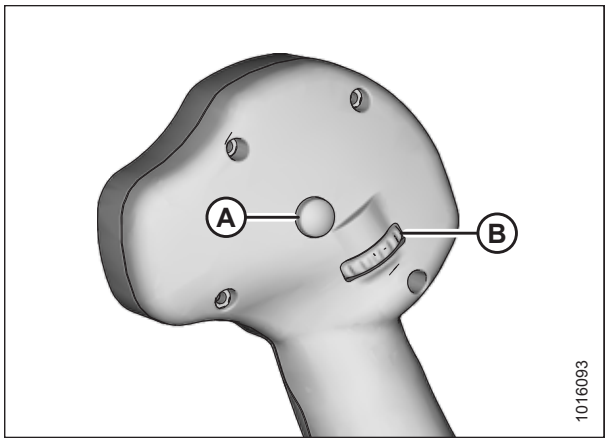

Figure 3.58: GSL Function Groups

Header Position Six-Way Switch

- To lower header slowly, press (A) lightly
- To lower header quickly, press (A) fully
- To raise header slowly, press (C) lightly
- To raise header quickly, press (C) fully
- To tilt header downward, press (B)
- To tilt header upward, press (D)

Release switch at desired position.

NOTE:

Header raise and lower rates are adjustable on the HPT display. Refer to *4.6.8 Adjusting Header Raise and Lower Rates, page 205* or header setup in *Menu Icons, page 84*.

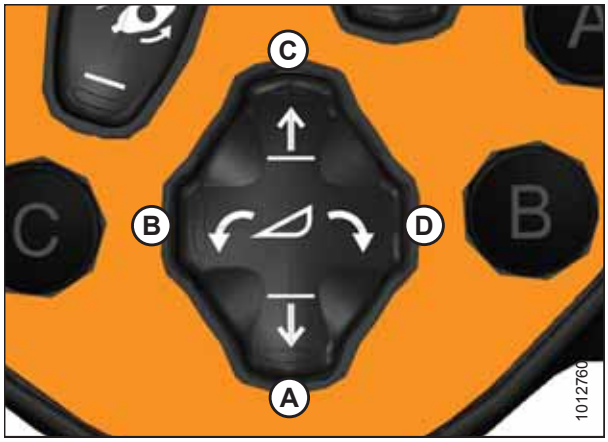

Figure 3.59: Ground Speed Lever

NOTE:

For detailed switch operating modes, refer to the section in this manual that is specific to your header.

Reel Position Four-Way Switch

The reel position button performs different functions depending on the attached options. For specific operating instructions, refer to the following sections:

- Reel fore-aft position and height on draper headers:
  - *4.7.2 Adjusting Reel Fore-Aft Position, page 207*
  - *4.7.3 Adjusting Reel Height, page 207*
- Center-link assist cylinder:
  - *4.4.2 D1X or D1XL Series Draper Header, page 154*
  - *4.4.1 A40DX Auger Header, page 143*
- Double windrow attachment (DWA) position:
  - *4.6.6 Double Windrowing, page 202*

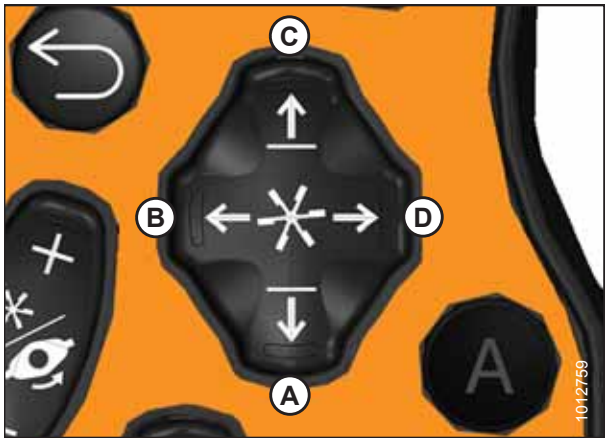

Figure 3.60: Ground Speed Lever

A - Reel Down **B - Reel Forward**
C - Reel Up **D - Reel Aft**

Reel and Disc Speed Switch

- Press and hold the **+** button (A) to increase the reel or disc speed.
- Press and hold the **–** button (B) to decrease the reel or disc speed.
- Release the button at the desired speed.

Refer to the applicable header topic for detailed use of these switches.

NOTE:

The REEL and DISC SPEED switch can operate the turn signals when the header is not in use. For example, when driving in the engine-forward position, or when operating in cab-forward position with the header disengaged.



Figure 3.61: GSL Reel and Disc Speed Switch

Auger header

By default, on an A40DX Auger Header, the reel and auger speeds are hydraulically linked. When the reel speed is changed, the auger speed changes automatically. Independent reel and auger adjustment is available on the A40DX GSS (Grass Seed) using the differential auger-reel control feature. It is also available on the A40DX (not Grass Seed) as an option: the Reel Speed Control kit (MD #B6604).

IMPORTANT:

Reel speed on an A40DX Auger Header **MUST NOT EXCEED** 85 rpm. Auger speed **MUST NOT EXCEED** 320 rpm.

One-Touch-Return Buttons (A, B, C)

One-Touch-Return buttons save header configuration settings and serve as presets for quickly returning the header to specific settings.

The One-Touch-Return buttons **A, B,** and **C** always save header height settings, but the following settings can also be saved depending on the header type:

- Header tilt
- Deck position/header float selection
- Double windrow attachment (DWA) or swath compressor raise/lower
- DWA speed
- Knife speed
- Draper speed
- Reel speed
- Reel height
- Reel fore-aft
- Disc speed



Figure 3.62: One-Touch-Return Buttons on GSL

To program the One-Touch-Return buttons, press and hold button A, B, or C on the GSL handle for 3 seconds until an audible tone is heard, indicating the current header settings are saved to that button.

To return header to a preset condition, tap the A, B, or C button quickly. Holding the One-Touch-Return button too long can inadvertently reprogram the current header settings.

Pressing a programmed A, B, or C button opens a run screen that shows the corresponding letter (A) on the screen for the preset.



Figure 3.63: One-Touch-Return Buttons on GSL

3.16.4 Console Header Buttons

The console header buttons (A) adjust the following header functions:

- Deck shift/float preset
- Draper speed
- Double windrow attachment (DWA)or swath compressor lift functions



Figure 3.64: Console Header Buttons

Deck Shift / Float Presets

Draper header with deck shift option:

- Controls the draper deck position for double windrowing with a draper header.
- Set header float for each deck position. Refer to *Setting the Float, page 196*.

NOTE:

The last float setting used in any deck shift position will be stored into memory automatically.

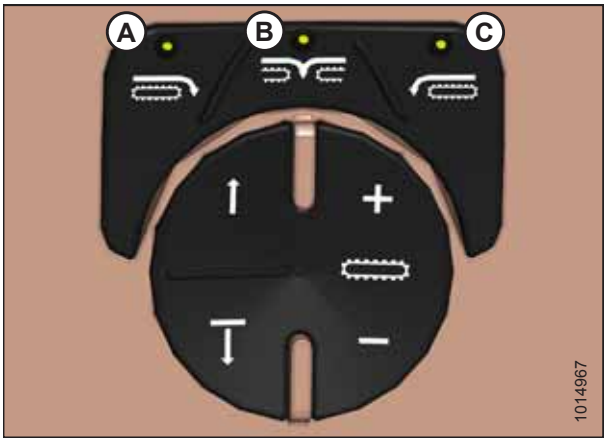

Figure 3.65: Header Deck Shift Buttons

A - Right-Side Delivery **B - Center Delivery**
C - Left-Side Delivery

Float presets:

When used with a rotary disc header, auger header, or draper header, these buttons select header float presets. Refer to *4.9.3 Setting Float Options with Fixed Deck, page 250* to learn how to preset the float.

NOTE:

For detailed switch operating modes, refer to the section in this manual that is specific to your header.

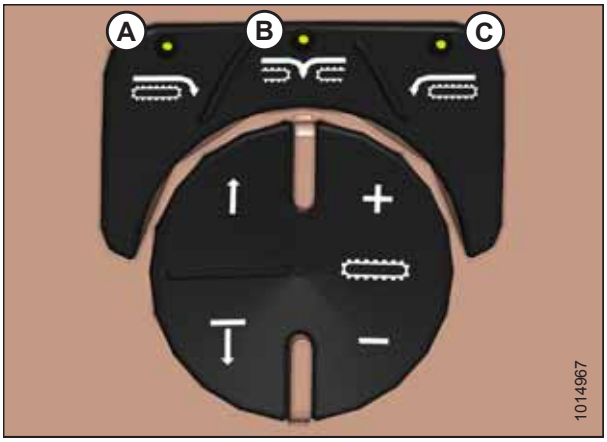

Figure 3.66: Header Switches

A - Float Preset 1 **B - Float Preset 2**
C - Float Preset 3

Conveyor Speed Adjustment Buttons

Adjust header or double windrow attachment (DWA) conveyor speed by pressing switch (A) to increase the speed, or switch (B) to decrease the speed.

Conveyor speed can be adjusted in either manual or auto modes. Refer to *4.7.6 Adjusting Draper Speed, page 215* for more information.

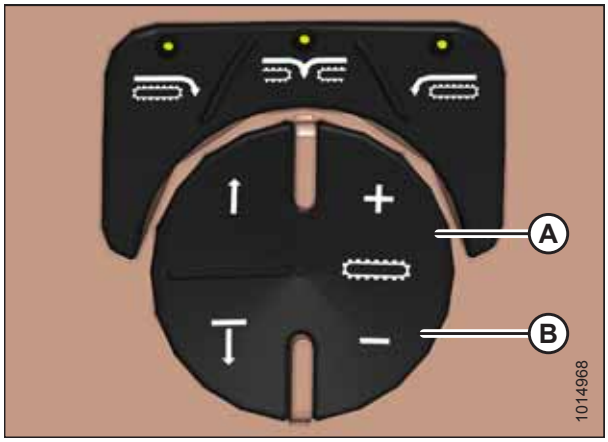

Figure 3.67: Operator's Console Conveyor Controls

Auxiliary Lift Switches

With double windrow attachment (DWA):

- Raise the DWA deck by pressing button (A), or lower the deck by pressing button (B).

With swath compressor attachment:

- Raise the swath compressor by pressing button (A), or lower it by pressing button (B).

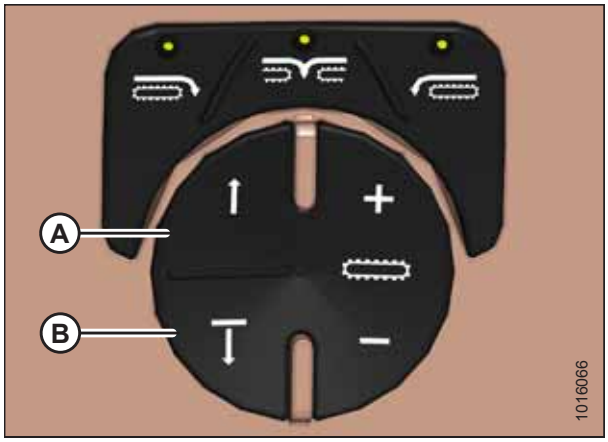

Figure 3.68: Operator's Console Auxiliary Controls

3.17 Harvest Performance Tracker Display

The Harvest Performance Tracker (HPT) display settings are preset at the factory. This section explains how to adjust the settings.

3.17.1 Harvest Performance Tracker Screen Layout

The appearance and functions of the Harvest Performance Tracker (HPT) depend on the type of header attached.

Figure 3.69: Run Screen 1 – Draper Header Shown

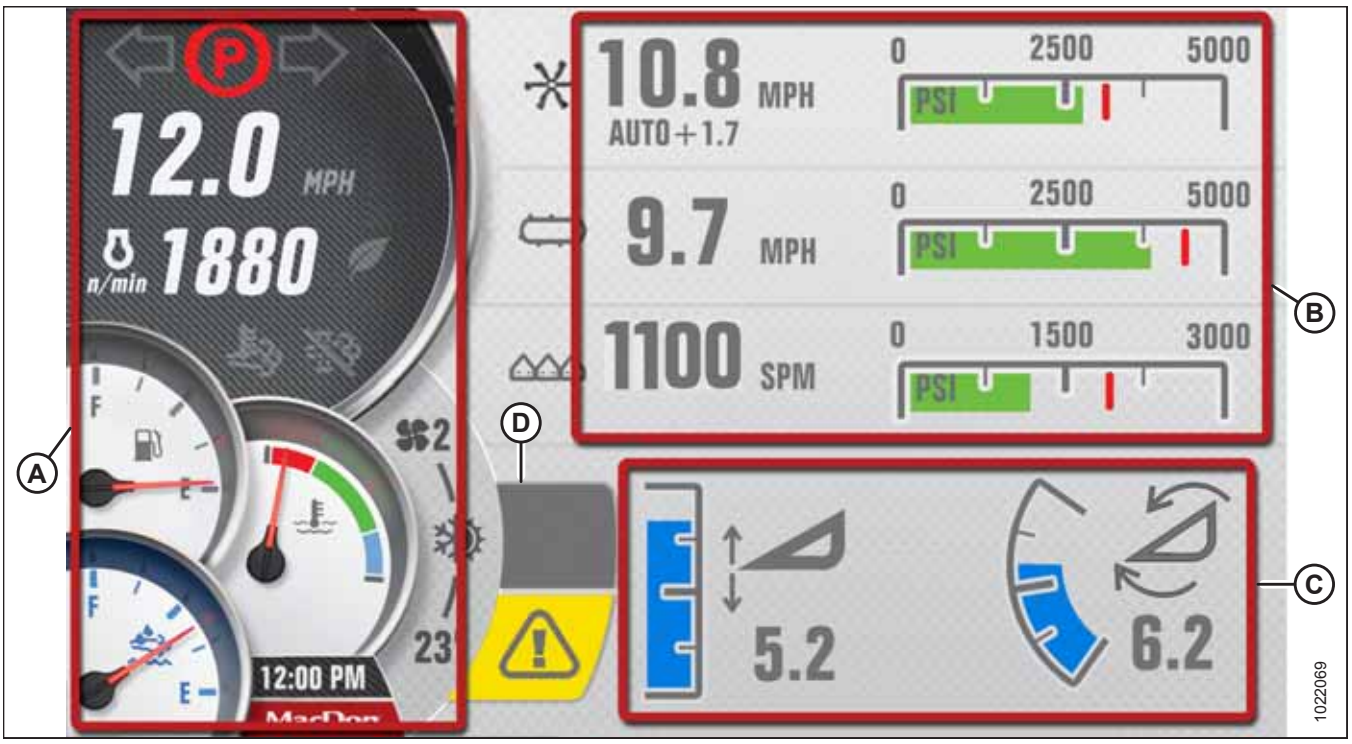

A - Left Gauge Cluster | B - Header Information | C - Current Header Position | D - Telltales

The HPT display is separated into the following zones:

Left gauge cluster:

- Ground speed
- Maximum ground speed
- Engine rpm
- Eco engine control (EEC) active/inactive
- High exhaust system temperature (HEST) light
- Inhibit status
- Park and turn signal status
- Level gauges for fuel and diesel exhaust fluid (DEF)
- Coolant temperature gauge
- Climate control temperature and blower speed
- Current time



Figure 3.70: Gauge Cluster

Header information:

The information displayed depends on the type of header attached to the windrower and which run screen is active.

- **Run screen #1:** Displays reel, draper, knife, disc, or auger speed and pressure; alarm point; and indexing (factory-set according to header)
- **Run screen #2:** Displays draper, knife, or disc speed and pressure; reel height and fore-aft position; hydraulic pressure; and load bar
- **Run screen #3:** Displays fuel per hour/acre, acres per hour, and sub acres per hour (resettable)
- **Run screen #4:** Displays cooling fan speed, engine air intake temperature, hydraulic oil temperature, and engine coolant temperature



Figure 3.71: Draper Header Information

Current header position:

- Displays basic header functions: height and angle

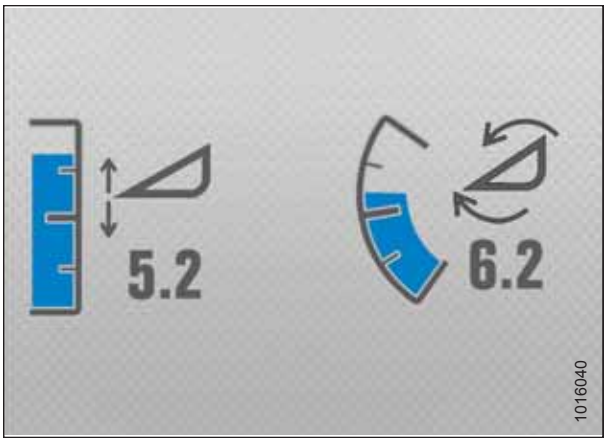

Figure 3.72: Current Header Position

Telltales:

- Telltales (A) indicate an engine or windrower fault
- Telltales are amber or red in color accompanied by a symbol for the fault
- Telltales display a short description (B) of the fault

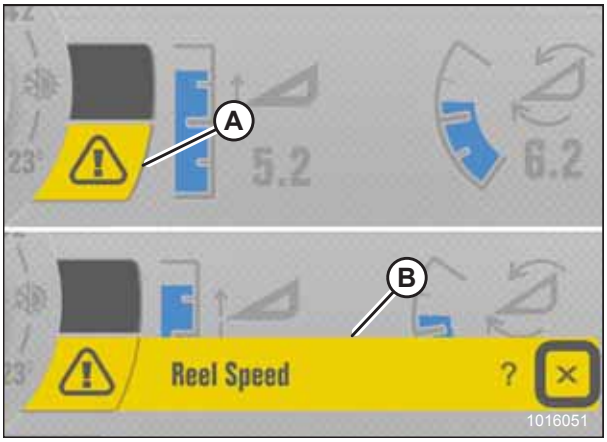

Figure 3.73: Faults/Telltales

Required maintenance indicator:

- An amber indicator (A) is displayed 50 hours before required maintenance is due
- The indicator only displays when header is disengaged
- The indicator flashes when maintenance is overdue by 50 hours



Figure 3.74: Maintenance Indicator

3.17.2 Navigating the Harvest Performance Tracker Display

Scroll Knob, Scroll Wheel, and Select Button

Turning the scroll knob (A) on the Harvest Performance Tracker (HPT) display highlights the available options within a menu and adjusts the settings. Pushing the scroll knob selects functions or menu items. Scroll and select functions are duplicated on the ground speed lever (GSL) controls. Unless otherwise specified, both buttons will perform the same function. When SELECT is used in this document, either of these buttons can be used.

- Turn scroll knob (A) clockwise to move selections down the screen, to the right (clockwise), and to increase settings. Push the scroll knob to activate the selection.
- Turn scroll knob (A) counterclockwise to move selections up the screen, to the left (counterclockwise), and to decrease settings. Push the scroll knob to activate the selection.



Figure 3.75: HPT Scroll Knob

NOTE:

The scroll wheel (A) on the back of the GSL and the SELECT button (B) on the front of the GSL perform the same functions as the HPT rotary scroll knob.

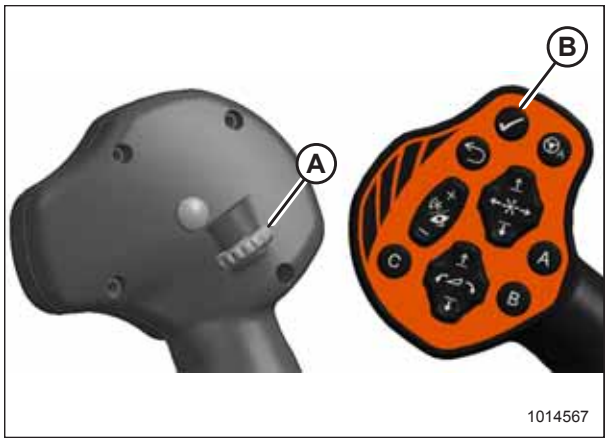

Figure 3.76: GSL Scroll Wheel and Select Button

Home, Back, and Select Buttons

- Press the BACK button (A) on the Harvest Performance Tracker (HPT) to return to the previous level within the menu structure.
- Press the HOME button (B) on the HPT to return to the last selected run screen (or header disengaged screen).



Figure 3.77: HPT Home and Back Buttons

- Press the BACK button (A) on the ground speed lever (GSL) to return to the previous level within the menu structure.
- Press the SHIFT button (B) on the back of the GSL, and then press the GSL BACK button (A) to return to the last selected run screen (or header disengaged screen). Pressing the SHIFT (B) and BACK (A) buttons on the GSL at the same time produces the same result as pushing the HOME key on the HPT display.

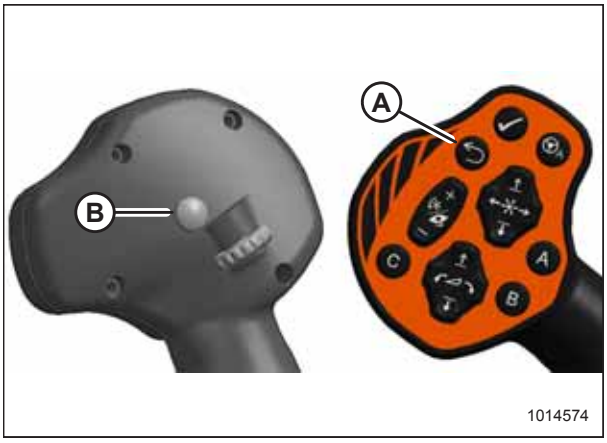

Figure 3.78: GSL Select and Back Buttons

Soft Keys

- Soft keys 1–4 (A) on the Harvest Performance Tracker (HPT) display run screens 1–4 respectively
- Soft key 5 (B) displays the main menu
- After a menu is open, soft keys 1–5 also function as buttons within menus



Figure 3.79: HPT Soft Keys

QuickMenu System

The QuickMenu system allows you to change certain windrower and header functions directly on the screen.

1. Press the scroll knob (A) on the Harvest Performance Tracker (HPT) or the SELECT button (B) on the ground speed lever (GSL) while in any run screen to open the QuickMenu system.

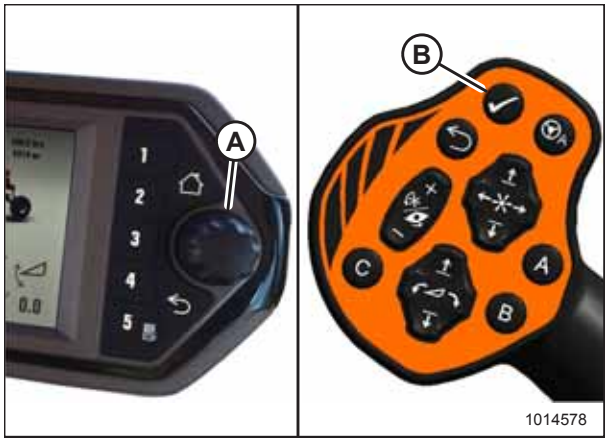

Figure 3.80: HPT Scroll Knob and GSL Select Button

2. Use the HPT scroll knob or the GSL scroll wheel to move the red cursor (A) around the screen. The following selectable areas are highlighted in white and can be changed while in motion using the QuickMenu system:

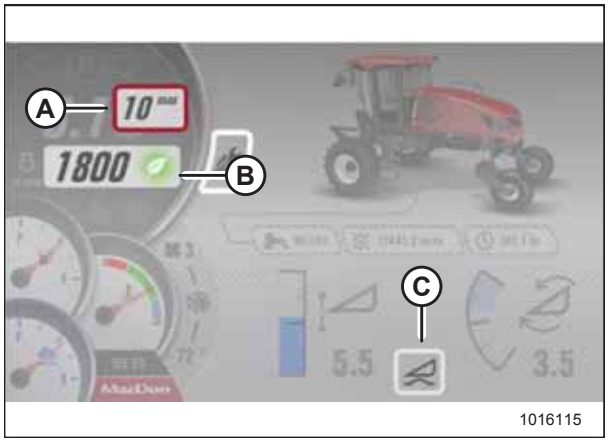

Figure 3.81: QuickMenu System

   - Ground speed limit (A) – Refer to *Adjusting Ground Speed Limit, page 124*.
   - EEC throttle limit (B) – Refer to *Programming the Eco Engine Control, page 119*.
   - Header float (C) – Refer to *Setting the Float, page 196*.
   - Header adjustments (when header is running [not shown]) – Refer to *4.6 Operating a Header, page 193*.
   - Knife speed – Refer to *4.7.7 Knife Speed, page 220*, or *4.8.2 Knife Speed, page 238*.
   - Access maintenance information – Refer to *3.17.7 Machine Information Pages, page 99*.
   - Adjust auto speed settings – Refer to *4.7 Operating with D1X or D1XL Series Draper Header, page 207*, *4.8 Operating with an A40DX Auger Header, page 232*,*4.9 Operating with an R85 Rotary Disc Header, page 247*, or *4.10 Operating with an R113 Rotary Disc Header, page 254*.
   - Define header alarm speeds – Refer to *4.7 Operating with D1X or D1XL Series Draper Header, page 207*, *4.8 Operating with an A40DX Auger Header, page 232*, or *4.9 Operating with an R85 Rotary Disc Header, page 247*.
   - Header Alarm pressure – Refer to *4.7 Operating with D1X or D1XL Series Draper Header, page 207*, *4.8 Operating with an A40DX Auger Header, page 232*, *4.9 Operating with an R85 Rotary Disc Header, page 247*, or *4.10 Operating with an R113 Rotary Disc Header, page 254*.

- Manage telltales – Refer to *Faults and Telltales, page 87*.
- Turn auto speeds ON/OFF – Refer to *4.7 Operating with D1X or D1XL Series Draper Header, page 207*, *4.8 Operating with an A40DX Auger Header, page 232*, or *4.9 Operating with an R85 Rotary Disc Header, page 247*.

3. Place the red cursor (red border [A]) over the function you want to adjust, and press the HPT scroll knob or GSL SELECT button to display a submenu containing the adjustable values within the selected function.

Main Menu

To display the main menu and select functions, follow these steps:

1. Press soft key 5 (A) to open the main menu or press SHIFT and SELECT on the ground speed lever.
2. Use the Harvest Performance Tracker (HPT) scroll knob (B) or the ground speed lever (GSL) scroll wheel (not shown) to place the red cursor (C) over the icon you want to select.

   NOTE:

   Using scroll knob will activate titles that explain each selection.

3. Press the HPT scroll knob (B) or the GSL SELECT button (not shown) to select the highlighted icon.

   NOTE:

   Pressing the corresponding soft key will also work.

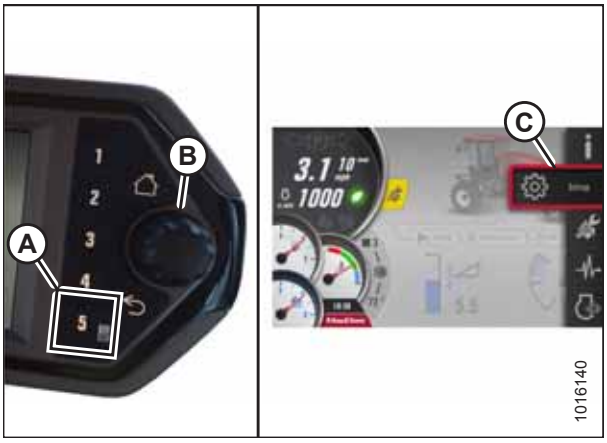

Figure 3.82: Opening the Main Menu

The main menu provides access to submenus for viewing and adjusting windrower and header settings. Refer to *Menu Icons, page 84* for details on navigating the following submenus:

- Information
- Settings
- Maintenance
- Diagnostics
- Engine aftertreatment

Menu Icons

Several menu icons are available in the main menu. Selecting a menu icon will open submenu icons, menu lists, and radio buttons for viewing and adjusting windrower and header settings.

Information: Icon (A) displays the following submenu icons:

- Windrower Information (B)
- Header Information (C)
- Module Information (D)
- Performance Information (E)

NOTE:

Header Information (C) has a hidden menu allowing Dealers to modify the stored list of headers. To access, hold the EEC button for 5 seconds while on the Header Information page.

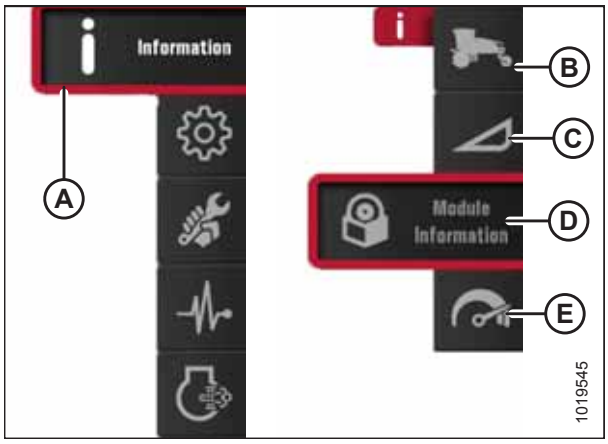

Figure 3.83: Information Icon and Information Submenu Icons

Setup: Icon (A) displays the following submenu icons:

- Screen Settings (B)
- Windrower Settings (C)
- Header Settings (D)
- One-Touch-Return Settings (E)

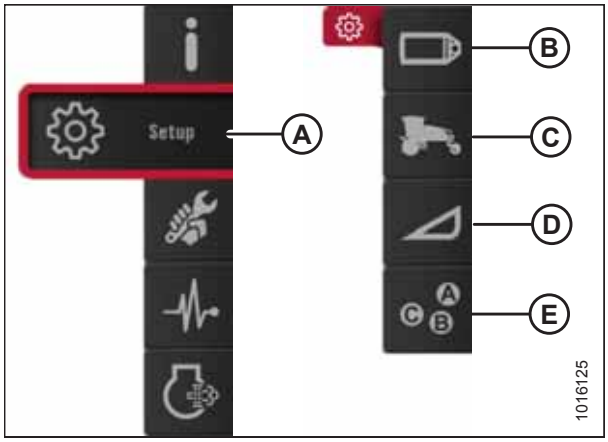

Figure 3.84: Settings Icon and Settings Submenu Icons

Screen Settings: Icon (A) displays the following submenu icons:

- Brightness and Volume (B)
- Time and Date (C)
- Language and Units (D)
- Run Screen Set-Up (E)
- Reset to Defaults (F)

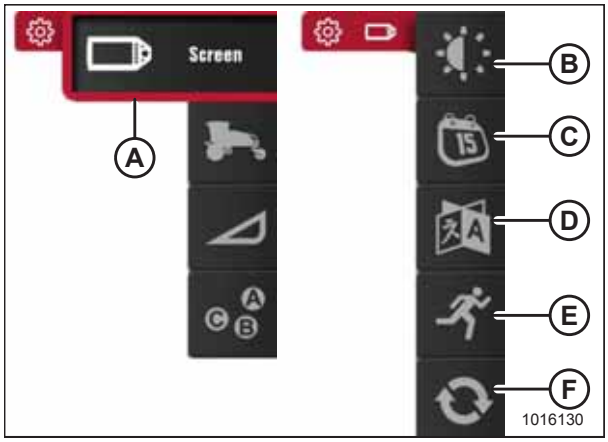

Figure 3.85: Screen Settings Icon and Display Settings Submenu Icons

Windrower Settings: Icon (A) displays the following submenu icons:

NOTE:

The F3 shortcut button on the operator's console also displays the windrower settings menu.

- Calibration (B)
- Tires (C)
- Lockout Functions (D)
- Sensors (E)

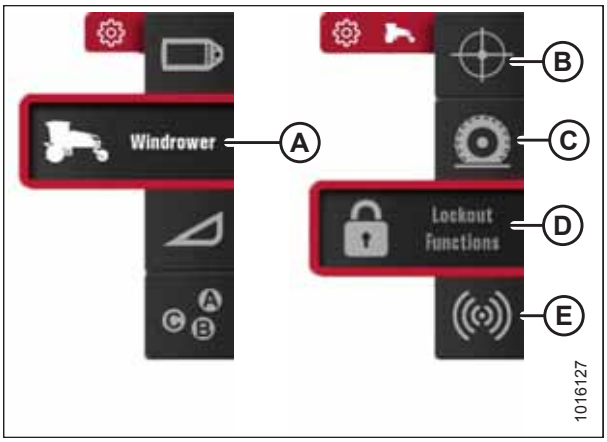

Figure 3.86: Windrower Settings Icon and Windrower Settings Submenu Icons

Header Setup: Icon (A) opens the SET-UP HEADER menu list.

NOTE:

The F4 shortcut button on the operator's console also displays the SET-UP HEADER menu list.

- Header Type (B)
- Hours Used (C)
- Total Acres (D)

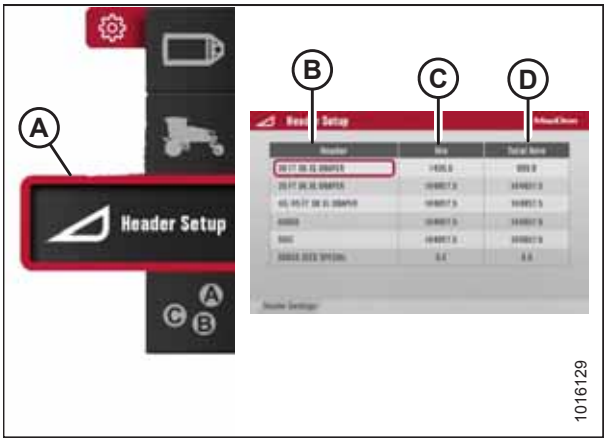

Figure 3.87: Header Settings Icon and Set-Up Header Menu List

After the header is selected, the HEADER SETUP menu opens, which includes:

- Cut Width
- Raise/Lower Rates
- Attachments



Figure 3.88: Header Setup Menu

One-Touch-Return: Icon (A) displays the One-Touch-Return menu list.

NOTE:

The F2 shortcut button on the operator's console also displays the One-Touch-Return menu list.



Figure 3.89: One-Touch-Return Icon and One-Touch-Return Menu List

Maintenance: Icon (A) opens the maintenance menu list (B). Refer to *5.2.3 Electronic Maintenance Tool, page 267*.

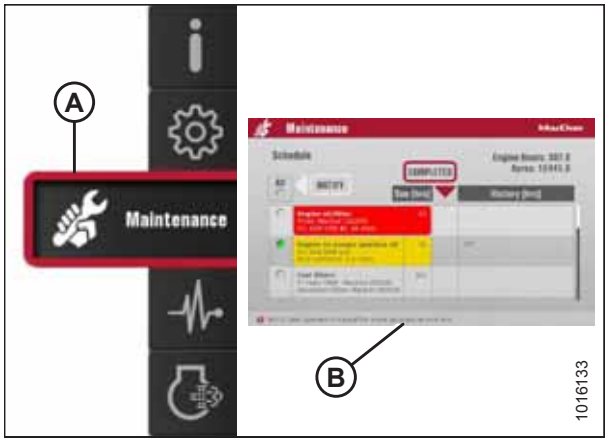

Figure 3.90: Maintenance Icon and Maintenance Menu List

Diagnostics: Icon (A) displays the following submenu icons:

- Windrower Fault Codes (B)
- Engine Fault Codes (C)
- Inputs/Outputs (D)
- Can Network (E)

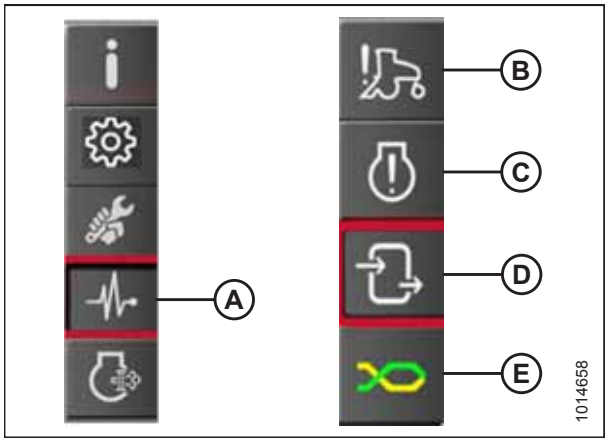

Figure 3.91: Diagnostics Icon and Diagnostics Submenu Icons

Engine Aftertreatment: Icon (A)

- Soft key 4 (B) activates the initiate manual SCR conditioning command, and the initiate icon (D) will become highlighted on the display
- Soft key 5 (C) activates the inhibit SCR conditioning command, and the inhibit icon (E) will become highlighted on the display

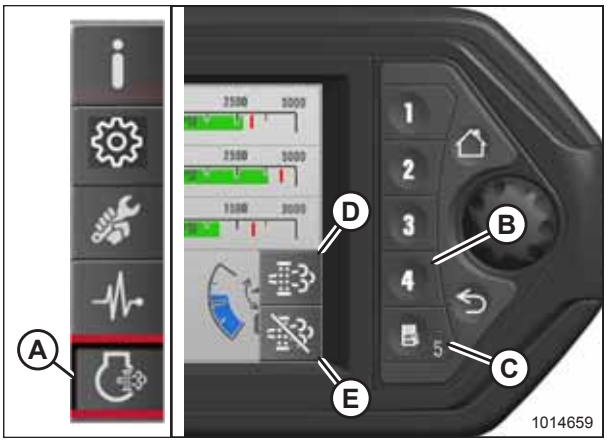

Figure 3.92: Engine Aftertreatment Icon and Soft Keys

Faults and Telltales

Faults and telltales displayed on the Harvest Performance Tracker (HPT) provide important information about the windrower and the engine. Telltales (A) include a symbol indicating the affected area (refer to *4.2 Symbol Definitions, page 106*) and a short description of the fault (B).

- Red faults (displayed on the top line) indicate that a major fault has occurred and will cause progressive damage or affect the safe operation of the machine. The machine should be shut down as soon as possible.
- Yellow faults (displayed on the bottom line) indicate that a failure has occurred, and the machine should be serviced as soon as possible to diagnose the failure.

To display a more detailed fault page, use the HPT scroll knob (E) to select the question mark symbol (C).

To close the short description (B), use the HPT scroll knob (E) to select the close symbol (D). Telltales (A) remain on the screen until the fault is corrected.

NOTE:

Closing the short description of a yellow fault will mute the alarm tone associated with that fault. Alarm tones associated with red faults cannot be muted.

Figure 3.93: HPT Run Screen Displaying Faults



If multiple faults are detected, the number of faults will appear in the corner of the telltale icon (A).



Figure 3.94: Telltale Icon (Multiple Faults Detected)

Using the HPT scroll/select knob, select the question mark symbol next to the short description to display a detailed description of the fault. If there are multiple faults, the icons (A) will appear in a row. To display a detailed description of each fault, use the HPT scroll/select knob to select the icon.

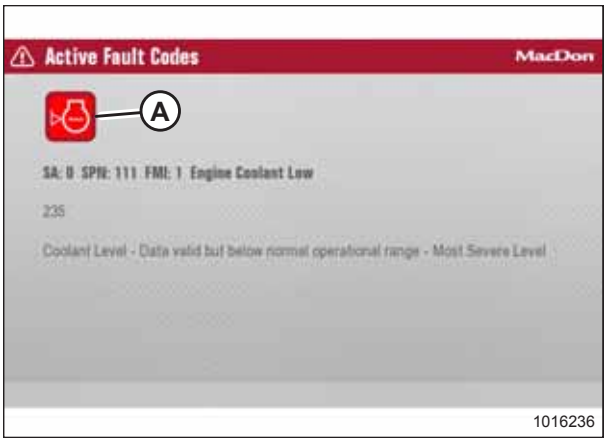

Figure 3.95: HPT Fault Description Page

3.17.3 Setting up the Harvest Performance Tracker Screen

The setup menu configures the Harvest Performance Tracker (HPT) for specific operations. The following settings should be checked before initial operation of the windrower.

The key must be turned to the ON position to enter the setup menu, but the engine does not have to be running.

Setting Screen Brightness

Screen brightness is shown with a 10-segment bar graph and is adjustable down to 10%. The brightness automatically adjusts for daytime and nighttime operation. Day mode is defined as having the headlights or work lights OFF (or having only the clearance lights ON). Night mode is defined as having either the headlights or work lights ON.

Follow this procedure to adjust the factory-set screen brightness:

1. Navigate to the SETTINGS menu with soft key 5 and the Harvest Performance Tracker (HPT) scroll knob. Refer to *3.17.2 Navigating the Harvest Performance Tracker Display, page 80* if required.
2. Scroll to the SCREEN icon (A) and select it.
3. Scroll to the BRIGHTNESS AND VOLUME icon (B), and select it to open adjustment window.

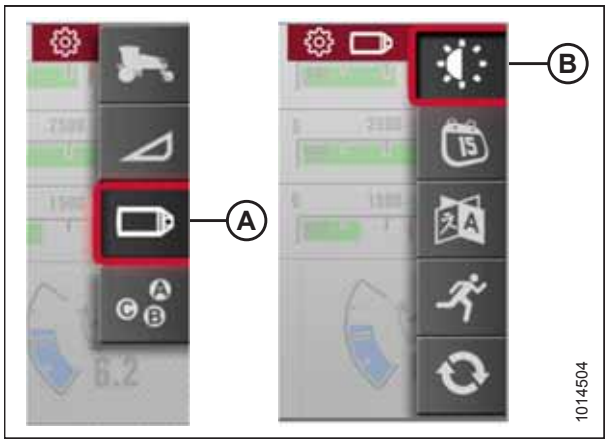

Figure 3.96: Brightness and Volume

4. Scroll through the following four brightness modes, and select the mode that requires adjustment:
   - DAY mode (A) (default setting is 70%)
   - NIGHT mode (B) (default setting is 20%)
   - KEYPAD DAY mode (C) (default setting is 70%)
   - KEYPAD NIGHT mode (D) (default setting is 20%)
5. Adjust the selected value by scrolling and previewing the brightness as you scroll.

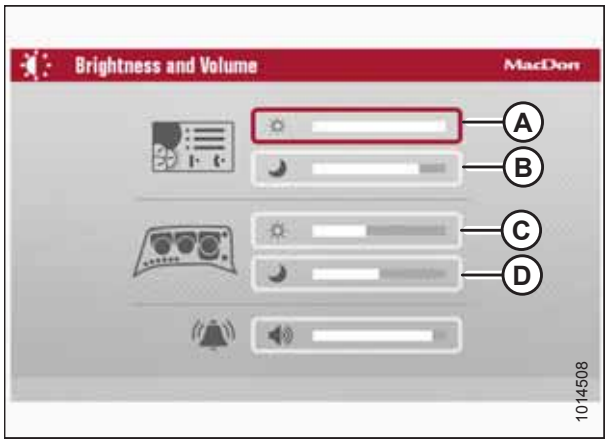

Figure 3.97: Brightness and Volume

Setting Alarm Volume

The volume control adjusts the audible alarms. It is depicted with a 10-segment bar graph and is adjustable down to 10%. The default volume is factory-set to 50%.

Adjust the volume as follows:

1. Navigate to SETTINGS Menu (C) with soft key 5 (A) and the HPT scroll knob (B). Refer to *3.17.2 Navigating the Harvest Performance Tracker Display, page 80* if required.

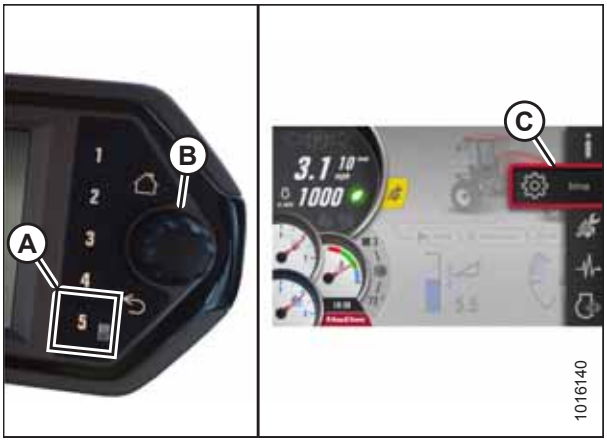

Figure 3.98: Main Menu

2. Scroll to the SCREEN icon (A) and select it.
3. Scroll to the BRIGHTNESS AND VOLUME icon (B), and select it to open adjustment window.

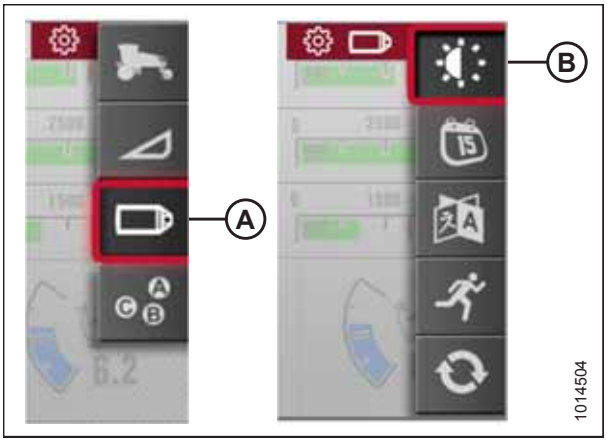

Figure 3.99: Brightness and Volume

4. Scroll to the VOLUME option (A) and select it.
5. Adjust volume by scrolling.

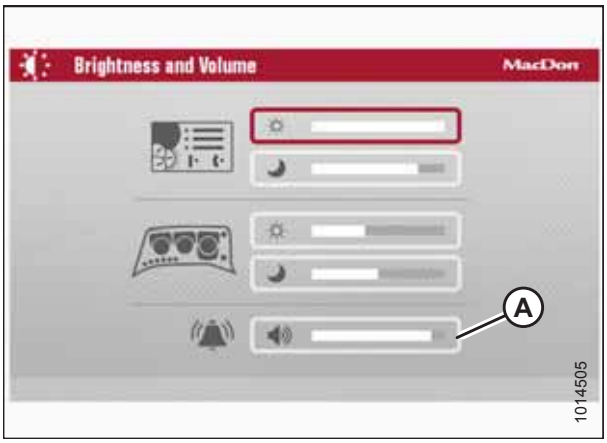

Figure 3.100: Brightness and Volume

Setting Time and Date

Whenever the Harvest Performance Tracker (HPT) boots up, the time and date will display according to your selected configuration.

1. Navigate to the SETTINGS Menu with soft key 5 and the HPT scroll knob. Refer to *3.17.2 Navigating the Harvest Performance Tracker Display, page 80* if required.
2. Scroll to the SCREEN option (A) and select it.
3. Scroll to the TIME AND DATE option (B), and select it to open the adjustment window.



Figure 3.101: Time and Date

4. Scroll through the available options on the HPT display, select desired option, and scroll to adjust.

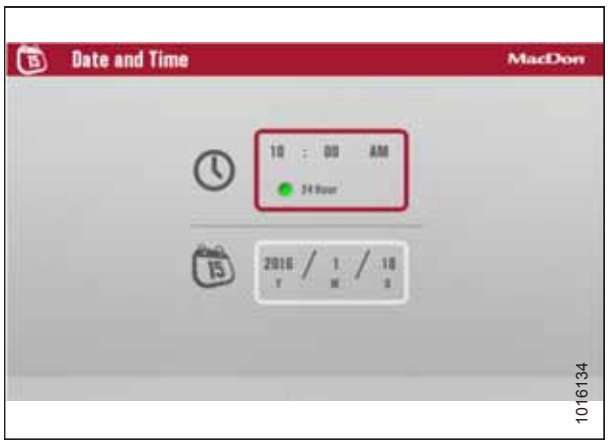

Figure 3.102: Time and Date

Setting Language and Units of Measurement

To set the language and units of measurement displayed, follow these steps:

1. Navigate to the SETTINGS menu with soft key 5 and the Harvest Performance Tracker (HPT) scroll knob. Refer to *3.17.2 Navigating the Harvest Performance Tracker Display, page 80* if required.
2. Scroll to SCREEN icon (A) and select it.
3. Scroll to LANGUAGE AND UNITS icon (B), and select it to open the adjustment window.
4. Scroll through the available options on the HPT, select desired item, and scroll to adjust:

   LANGUAGE
   - ENGLISH (default)
   - SPANISH

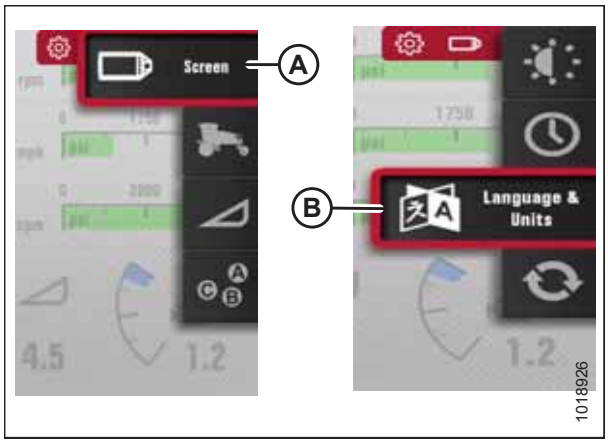

Figure 3.103: Language and Units

UNITS

- METRIC
- USA (default)

Refer to *8.2 Conversion Chart, page 413* for a comprehensive list of U.S. and metric units.

Resetting to Factory Defaults

To change any Harvest Performance Tracker (HPT) settings back to the defaults set in the factory, follow these steps:

1. Press soft key 5 (A), and use the HPT scroll knob (B) or the ground speed lever (GSL) scroll wheel (not shown) to place the red cursor over the SETTINGS icon (C).
2. Press the HPT scroll knob (B) or the GSL SELECT button (not shown) to activate the main menu (C) options.

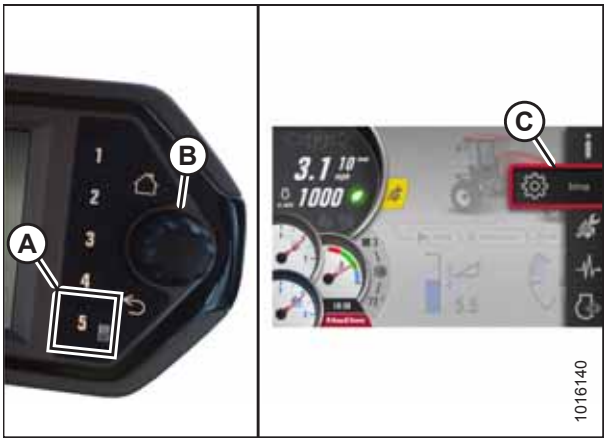

Figure 3.104: Opening the Main Menu

3. Scroll to the DISPLAY SETTING icon (A) and press SELECT.
4. Scroll to the RESET TO DEFAULTS icon (B), and press SELECT to open the adjustment window.

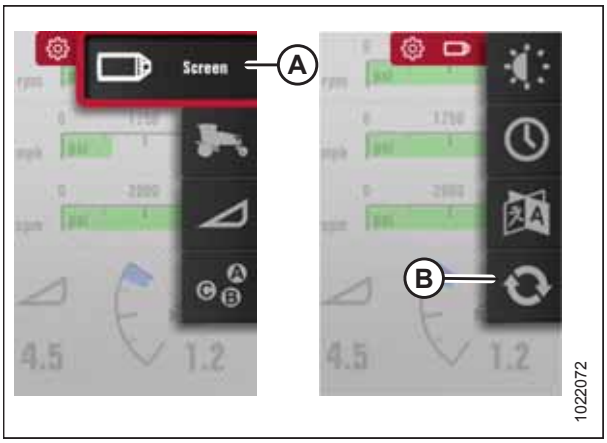

Figure 3.105: Opening the Reset to Defaults Page

5. Scroll through the available options, and press SELECT to reset to default. Refer to the following list for factory default options:
   - Select all
   - Display brightness
   - Keypad brightness by day
   - Display volume
   - Language (English)
   - Units (USA)
   - Eco engine control speed (4 and 6 cylinders have different speeds)

- Max cab-forward speed 14 mph
- Max engine-forward speed 27 mph
- Header speed settings
- Header alarm pressures
- Knife alarm speed
- Manual (not auto) knife speed mode
- Manual (not auto) reel speed mode
- Manual (not auto) draper speed mode
- All functions unlocked
- All sensors enabled
- Cut width
- Swath roller selection off
- Max header raise/lower rates
- One-touch-return presets (reset to default option available also within this menu)
- DWA speed
- DWA alarm pressure

6. Press the HOME or BACK button. The CONFIRM YES/NO dialog box is displayed.
7. Select YES to save changes and close the dialog box, or select NO to close the dialog box without saving changes.

3.17.4 Calibrating the Windrower and Header

When a header is attached to the windrower, the Harvest Performance Tracker (HPT) will recognize the header ID and determine the appropriate systems to calibrate. The following sensors may require calibration depending on header type:

- Header height
- Header angle
- Header float left
- Header float right
- Reel height
- Reel fore-aft
- Swath compressor

Recalibration is required if the HPT is replaced, a position sensor is replaced, sensor readouts are erratic, or a new header type or attachment is connected to the windrower.

NOTE:

To calibrate the knife drive, the header must be attached and engaged. If the header is disengaged when calibration is selected, the message ENGAGE HEADER will appear on the screen.

CAUTION

Before starting the machine, check to be sure all bystanders have cleared the area.

1. Start the engine, and engage the header.
2. Press soft key 5 (A) to open the HPT main menu.
3. Use HPT scroll knob (B) or the ground speed lever (GSL) scroll wheel to scroll to settings icon (C).
4. Press HPT scroll knob (B) or the GSL SELECT button (not shown) to activate the settings menu options.

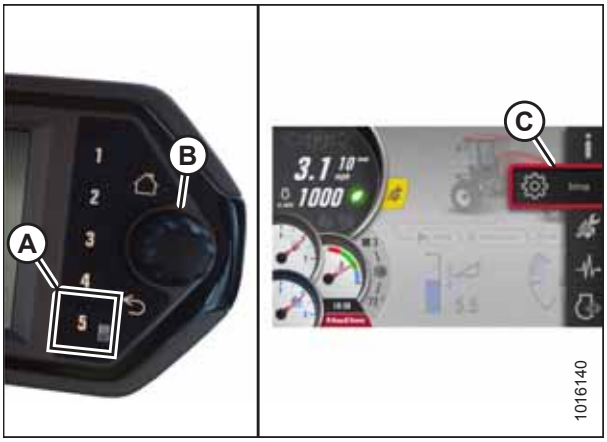

Figure 3.106: Opening the Main Menu

5. Scroll to WINDROWER SETTINGS icon (A) and press SELECT.
6. Scroll to CALIBRATION icon (B), and press SELECT to open the adjustment page.

   NOTE:

   The F3 shortcut button on the operator's console will also open the WINDROWER SETTINGS menu.

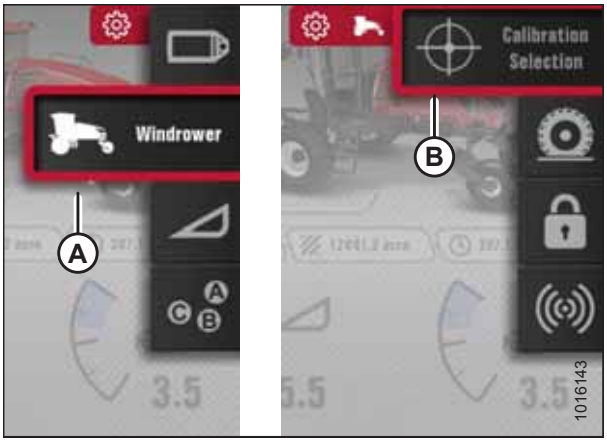

Figure 3.107: Windrower Settings Icon and Calibration Submenu Icon

7. Select POSITION SENSORS (A).

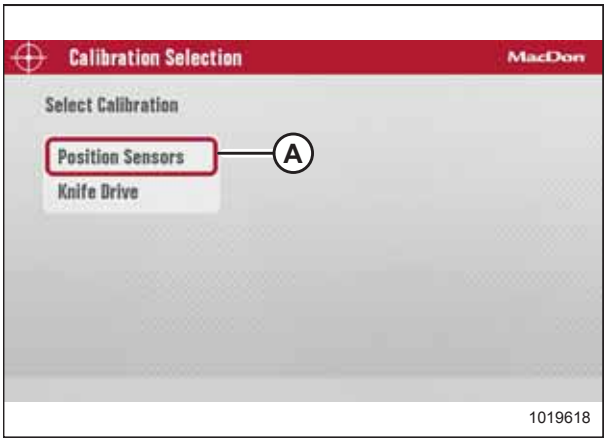

Figure 3.108: Calibration Options

8. Select CALIBRATION WITH HEADER ENGAGED to display the calibration page as shown at right.
9. Press the PLAY button on the screen to begin the calibration process.

   NOTE:

   If the engine speed is less than 1500 rpm when you press the PLAY button, the calibration system will accelerate the engine to 1500 rpm.

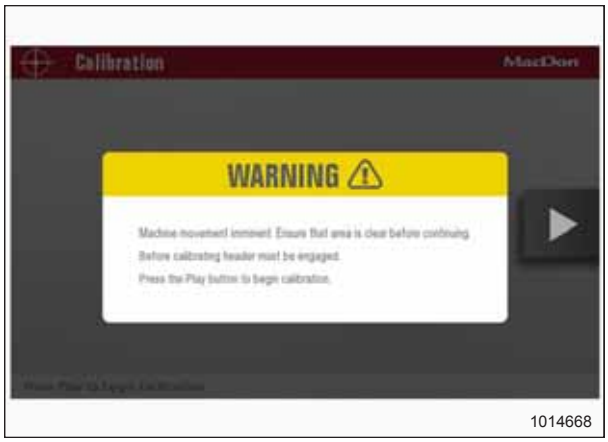

Figure 3.109: Calibration Page

10. When Stage 1 of the calibration is complete, press the PLAY button (A) on the screen to continue with Stage 2 of the calibration process.



Figure 3.110: Calibration Page

11. When Stage 2 of the calibration is complete, press the RESUME button (A) on the screen to set HEADER FLOAT, or press the HOME or BACK button (not shown) to exit without setting the float.



Figure 3.111: Calibration Page

NOTE:

Press the X button (A) on the screen (or press the HOME, BACK, or any GSL button [buttons not shown]) at any time during the calibration process to EXIT calibration without saving. The engine speed will return to the original rpm prior to starting the calibration process.

NOTE:

If a sensor goes out of its normal operating range during the calibration process, calibration will stop, and a message will appear on the screen indicating that the sensor is out of range. A flashing amber question mark will appear on the calibration icon in the menu system. If a sensor is out of range, adjust the sensor and restart the calibration process.



Figure 3.112: Calibration Page

3.17.5 Setting Windrower Tire Size

The Harvest Performance Tracker (HPT) is factory-set for 600/65R28 bar tires. If the windrower has a different tire type, you need to change this setting. Setting the proper tire size is important for accurate tracking of ground speed, acres, and productivity data.

1. Navigate to the SETTINGS menu with soft key 5 and the HPT scroll knob. Refer to *3.17.2 Navigating the Harvest Performance Tracker Display, page 80* if required.
2. Scroll to the WINDROWER SETTINGS icon (A) and select it.
3. Scroll to the TIRES icon (B), and select it to display the adjustment window.

   NOTE:

   The F3 shortcut button on the operator's console will also display the WINDROWER SETTINGS menu.

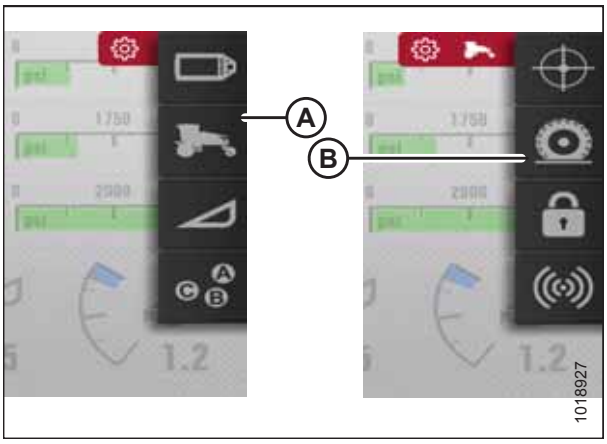

Figure 3.113: Tire Size

4. Scroll to highlight the appropriate tire size (A) and select it. The new selection will be displayed with a shaded green radio button.

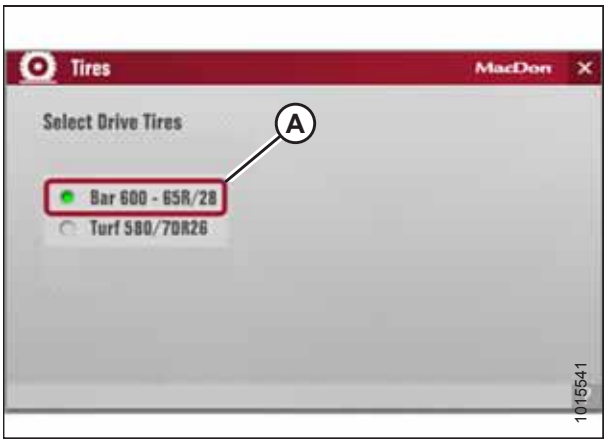

Figure 3.114: Tire Selection

3.17.6 Activating Control Locks

All header functions are factory-set to the unlocked position, but certain functions can be locked to prevent changes. This feature can be used to maintain preferred settings when there are multiple Operators.

1. Press soft key 5 (A) to display the main menu.
2. To scroll to the setting icon (C), use the Harvest Performance Tracker (HPT) scroll knob (B) or the ground speed lever (GSL) scroll wheel (not shown).
3. Press the HPT scroll knob (B) or the GSL SELECT button (not shown) to activate the settings menu options.

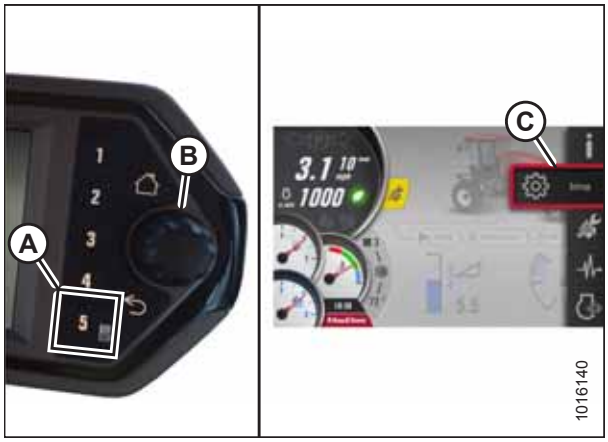

Figure 3.115: Displaying the Main Menu

4. Scroll to the WINDROWER SETTINGS icon (A) and press SELECT.
5. Scroll to the CONTROL LOCKS icon (B), and press SELECT to display the adjustment window.

   NOTE:

   The F3 shortcut button on the operator's console will also display the windrower settings menu.

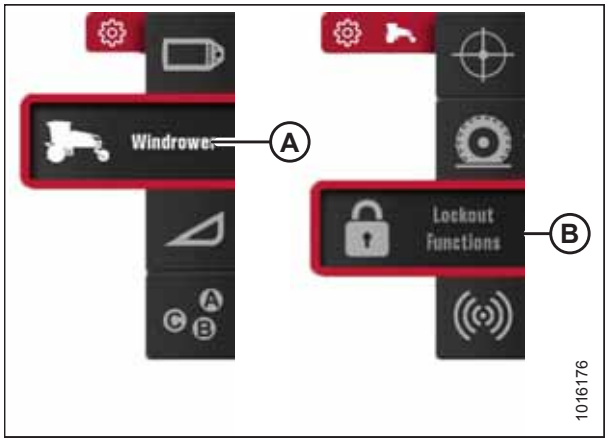

Figure 3.116: Windrower Settings Icon and Tires Submenu Icon

6. On the LOCKOUT FUNCTIONS PAGE, use the scroll knob on the HPT to move the cursor (A) to the desired function(s) to lock.
7. Press SELECT to activate the lock.

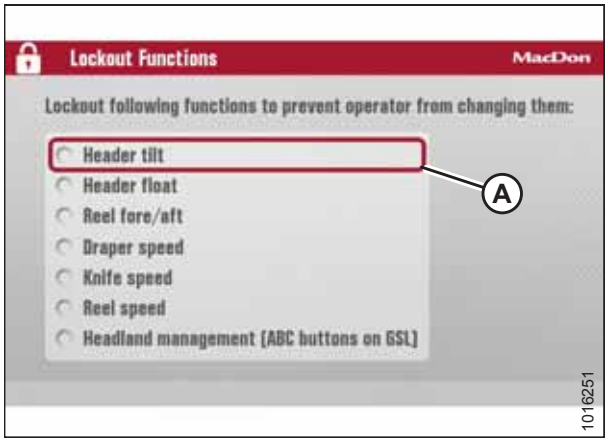

Figure 3.117: Lockout Functions Page

3.17.7 Machine Information Pages

Selecting the INFORMATION icon (A) from the main menu provides access to the following submenu icons:

- Windrower information (B) – Refer to *Accessing Windrower Information, page 99*.
- Header information (C) – Refer to *Accessing Header Information, page 100*.
- Software information (D) – Refer to *Accessing Software Information, page 101*.
- Performance information (E) – Refer to *Accessing Performance Information, page 102*.

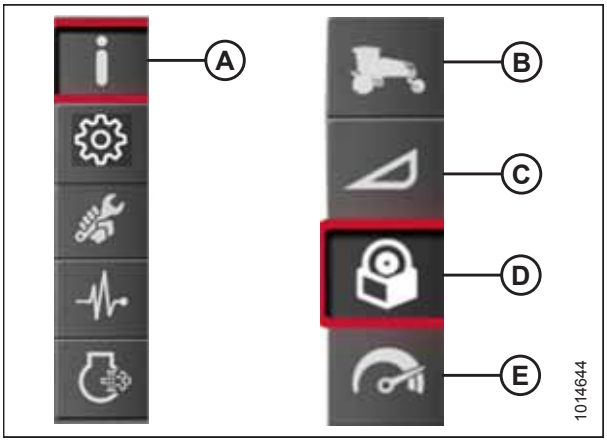

Figure 3.118: Information Icon and Information Submenu Icons

Accessing Windrower Information

To access information about the windrower on the Harvest Performance Tracker (HPT) display, follow these steps:

1. Press soft key 5 (A) to open the main menu.
2. To scroll to the INFORMATION icon (C), use the Harvest Performance Tracker (HPT) scroll knob (B) or the ground speed lever (GSL) scroll wheel (not shown).
3. Press the HPT scroll knob (B) or the GSL SELECT button (not shown) to select the highlighted INFORMATION icon.



Figure 3.119: Opening the Main Menu

4. Scroll to the WINDROWER INFORMATION submenu icon (A), and press SELECT to display the windrower information menu.

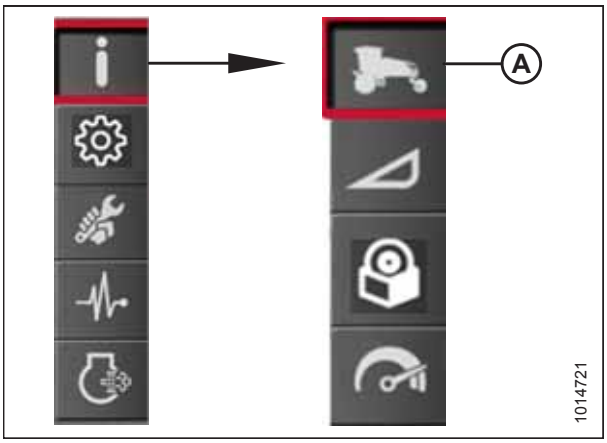

Figure 3.120: Windrower Information Submenu Icon

The windrower information menu displays the following information:

- Engine hours (A)
- Windrower total hours (B)
- Total acres (C)
- Windrower total header hours (D)

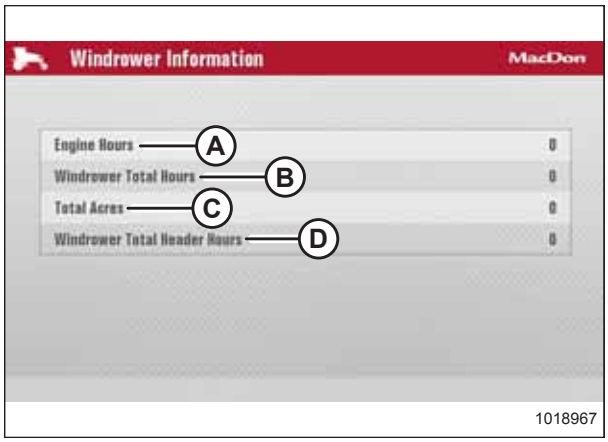

Figure 3.121: Windrower Information Menu

Accessing Header Information

To access information about the header on the Harvest Performance Tracker (HPT) display, follow these steps:

1. Press soft key 5 (A) to open the main menu.
2. To scroll to the INFORMATION icon (C), use the HPT scroll knob (B) or the ground speed lever (GSL) scroll wheel (not shown).
3. Press the HPT scroll knob (B) or the GSL SELECT button (not shown) to select the highlighted INFORMATION icon.

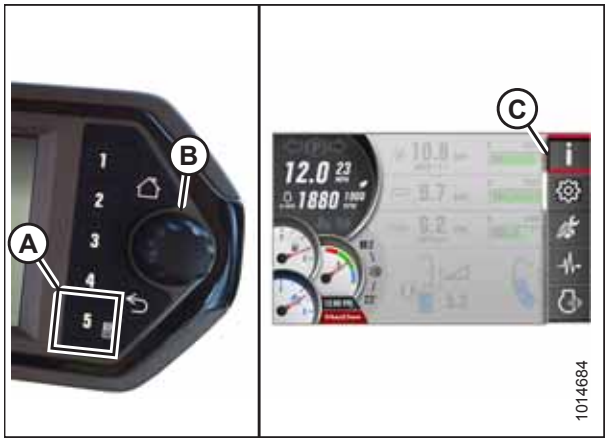

Figure 3.122: Opening the Main Menu

4. Scroll to the HEADER INFORMATION submenu icon (A), and press SELECT to display the header information menu.

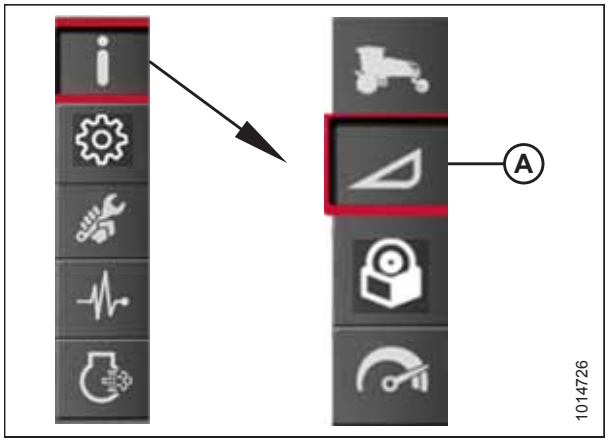

Figure 3.123: Header Information Submenu Icon

The header information menu displays the following information:

- Header (A)
- Header hours (B)
- Total acres (C)
- Sub-acres (D) (resettable)

NOTE:

If you select any particular value (E), the message RESET YES/NO appears on the display. Select YES to reset the sub-acres to zero and return to the same highlighted sub-acres. Select NO or press the BACK or HOME button to dismiss the message without resetting the sub-acres. The sub-acres are also resetable from run screen 3. Refer to *Viewing Performance Data, page 131*.

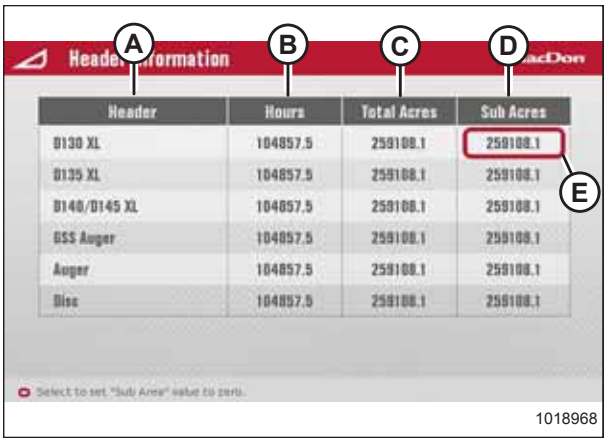

Figure 3.124: Header Information Menu

Accessing Software Information

To access software information on the Harvest Performance Tracker (HPT) display, follow these steps:

1. Press soft key 5 (A) to open the main menu.
2. To scroll to the INFORMATION icon (C), use the HPT scroll knob (B) or the ground speed lever (GSL) scroll wheel (not shown).
3. Press the HPT scroll knob (B) or the GSL SELECT button (not shown) to select the highlighted INFORMATION icon.



Figure 3.125: Opening the Main Menu

4. Scroll to the SOFTWARE INFORMATION submenu icon (A), and press SELECT to display the module information menu.

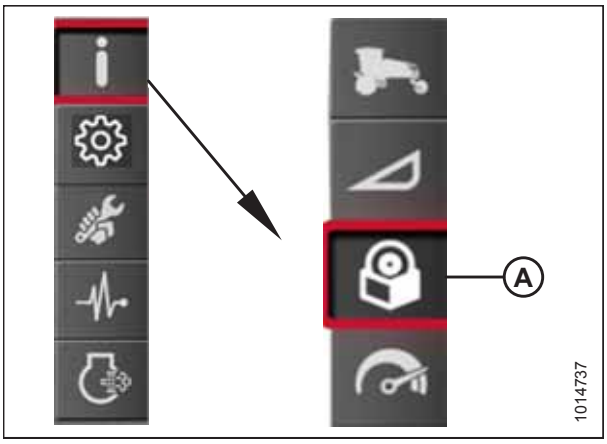

Figure 3.126: Software Information Submenu Icon

The HPT display reports the component make, software ID, and software installation date in the software information menu. In addition, the software versions and make, model, and serial numbers of the following modules are also displayed on the screen:

- Master controller (A)
- Display (B)
- Console (C)
- Ground speed lever (D)
- Engine control module (E)
- Roof relay module (F)
- Chassis relay module (G)
- HVAC module (not shown)
- Firewall extension module (not shown)

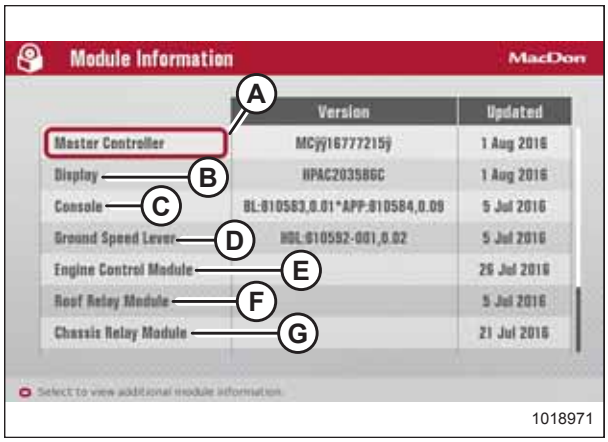

Figure 3.127: Software Information Menu

Accessing Performance Information

To access information on the Harvest Performance Tracker (HPT) about how the machine has performed to date, follow these steps:

1. Press soft key 5 (A) to open the main menu.
2. To scroll to the INFORMATION icon (C), use the Harvest Performance Tracker (HPT) scroll knob (B) or the ground speed lever (GSL) scroll wheel (not shown).
3. Press the HPT scroll knob (B) or the GSL SELECT button (not shown) to select the highlighted INFORMATION icon.



Figure 3.128: Opening the Main Menu

4. Scroll to the WINDROWER PERFORMANCE submenu icon (A), and press SELECT to display the performance information menu.

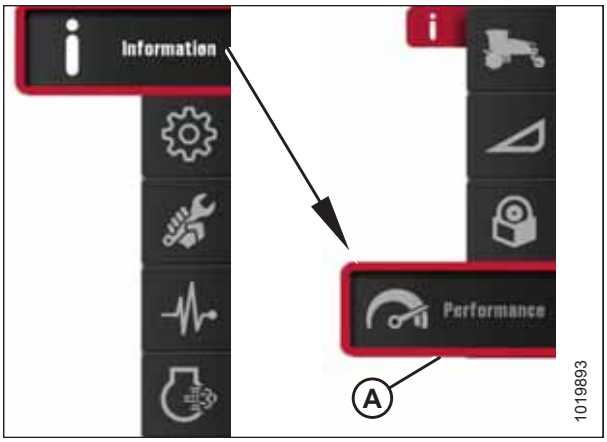

Figure 3.129: Performance Information Submenu Icon

The performance information menu displays two columns: one column displays the accumulated data over the machine's lifetime (A) and is not resettable, the other displays the data accumulated per field (B) and is resettable.

The performance information menu displays the following information:

- Engine hours (C)
- Engine % idle time (D)
- Average % load (E)
- Gal/Hr (F)
- Acres (G)
- Acres/Gal (H)
- Gal/Acre (J)
- Windrower header hours (K)

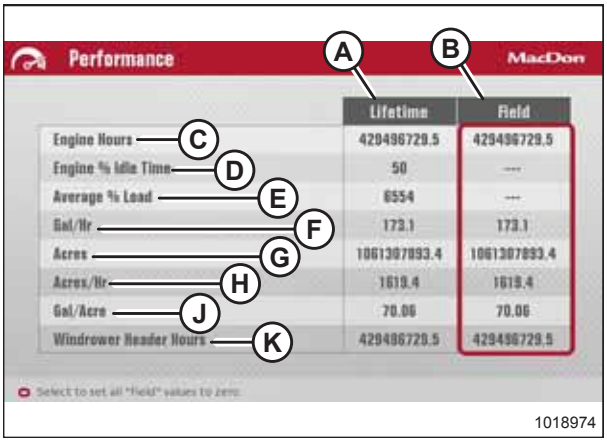

Figure 3.130: Performance Information Menu

NOTE:

To reset all of the field values to zero, use the scroll knob to highlight the FIELD column (B) and press the SELECT button.

3.17.8 F1 to F4 Function Buttons

The following functions have been assigned to the F1–F4 function buttons on the operator's console:

- **F1** (A) – Float menu
- **F2** (B) – One-Touch-Return
- **F3** (C) – Windrower settings
- **F4** (D) – Header settings

Press a function button to override the existing screen and display the function.

Press the function button again or press the Back button to return to the previous screen.

Press the Home button to return to the run screen.

NOTE:

F5 and F6 buttons are not assigned to any functions.



Figure 3.131: Operator's Console Shortcut Buttons

Chapter 4: Operation

4.1 Owner/Operator Responsibilities

CAUTION

- **It is your responsibility to read and understand this manual completely before operating the windrower. Contact your Dealer if an instruction is not clear to you.**
- **Follow all safety messages in the manual and on safety signs on the machine.**
- **Remember that YOU are the key to safety. Good safety practices protect you and the people around you.**
- **Before allowing anyone to operate the windrower, for however short a time or distance, make sure they have been instructed in its safe and proper use.**
- **Review the manual and all safety related items with all Operators every year.**
- **Be alert for other Operators not using recommended procedures or not following safety precautions. Correct these mistakes immediately, before an accident occurs.**
- **Do NOT modify the machine. Unauthorized modifications may impair the function and/or safety and affect machine life.**
- **The safety information given in this manual does NOT replace safety codes, insurance needs, or laws governing your area. Be sure your machine meets the standards set by these regulations.**

4.2 Symbol Definitions

The following symbols are used to depict functions or reactions of the various instruments and controls.

Learn the meaning of these symbols before operating the windrower.

4.2.1 Windrower Operating Symbols

These are the symbols used on the console for windrower operation.

Figure 4.1: Windrower Operating Symbols

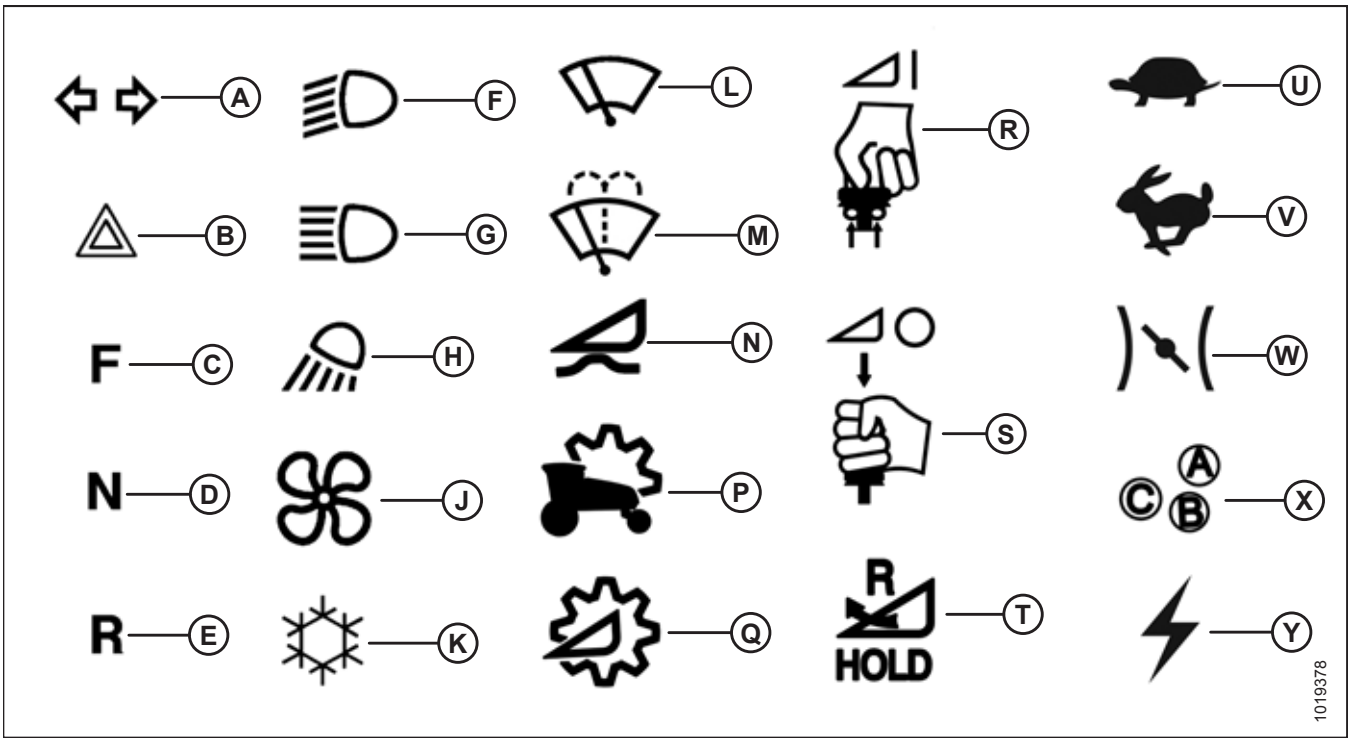

A - Signal Lights
B - Hazard Lights
C - Forward
D - Neutral
E - Reverse
F - Road Lights
G - High Beams
H - Cab-forward Field Lights
J - Blower Speed (Manual Mode)
K - Air Conditioning
L - Windshield Wiper
M - Wiper Fluid
N - Float Menu
P - Windrower Settings
Q - Header Settings
R - Header Engage
S - Header Disengage
T - Header Reverse
U - Slow
V - Fast
W - Engine Throttle
X - One-Touch-Return
Y - Electrical Power / Accessories

4.2.2 Harvest Performance Tracker Symbols

Figure 4.2: Harvest Performance Tracker (HPT) Symbols

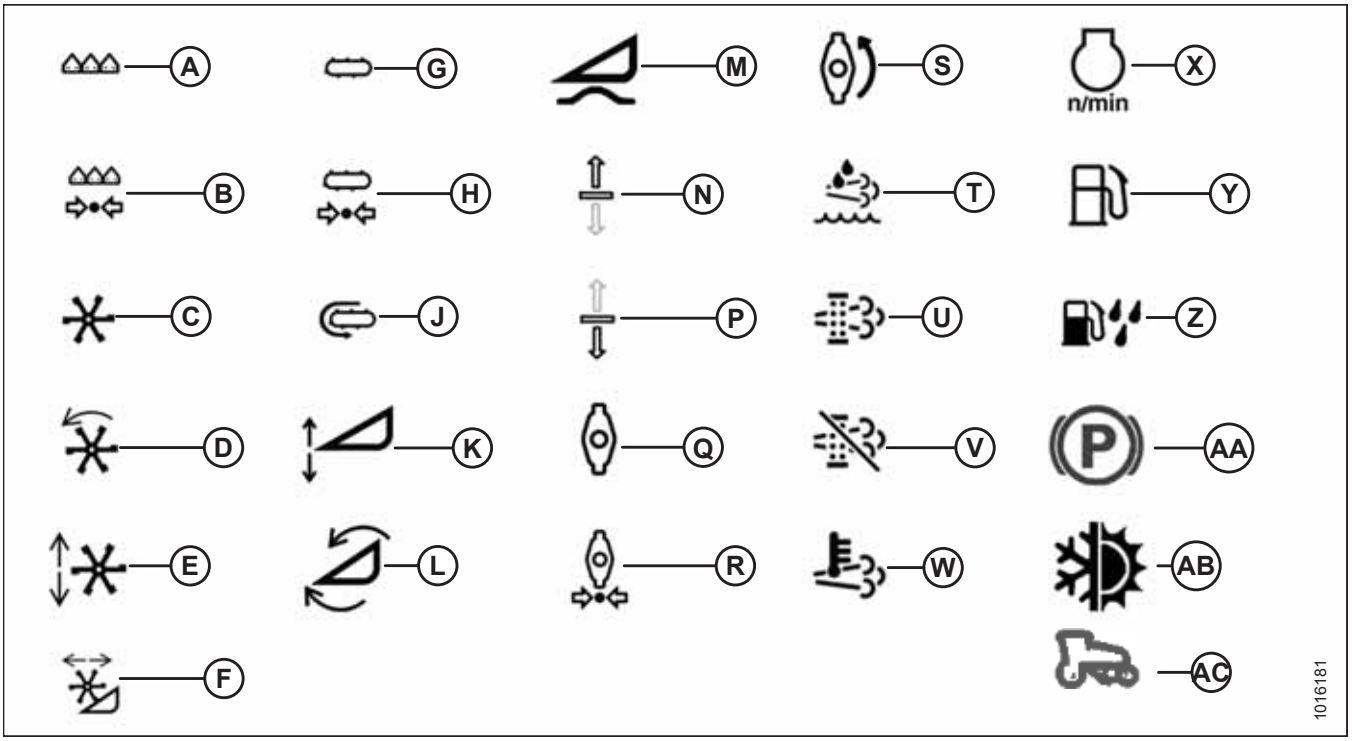

A - Knife
B - Knife Pressure
C - Reel
D - Reel Speed
E - Reel Height
F - Reel Fore-Aft
G - Draper
H - Draper Pressure
J - Draper Speed
K - Header Height
L - Header Tilt
M - Header Float
N - DWA Raise
P - DWA Lower
Q - Disc
R - Disc Pressure
S - Disc Speed
T - DEF
U - SCR Conditioning Manual
V - SCR Conditioning Inhibit
W - High Exhaust System Temperature
X - Engine rpm
Y - Fuel
Z - Water in Fuel
AA - Parking Brake
AB - Climate Control
AC - Swath Compressor

Figure 4.3: HPT Symbols

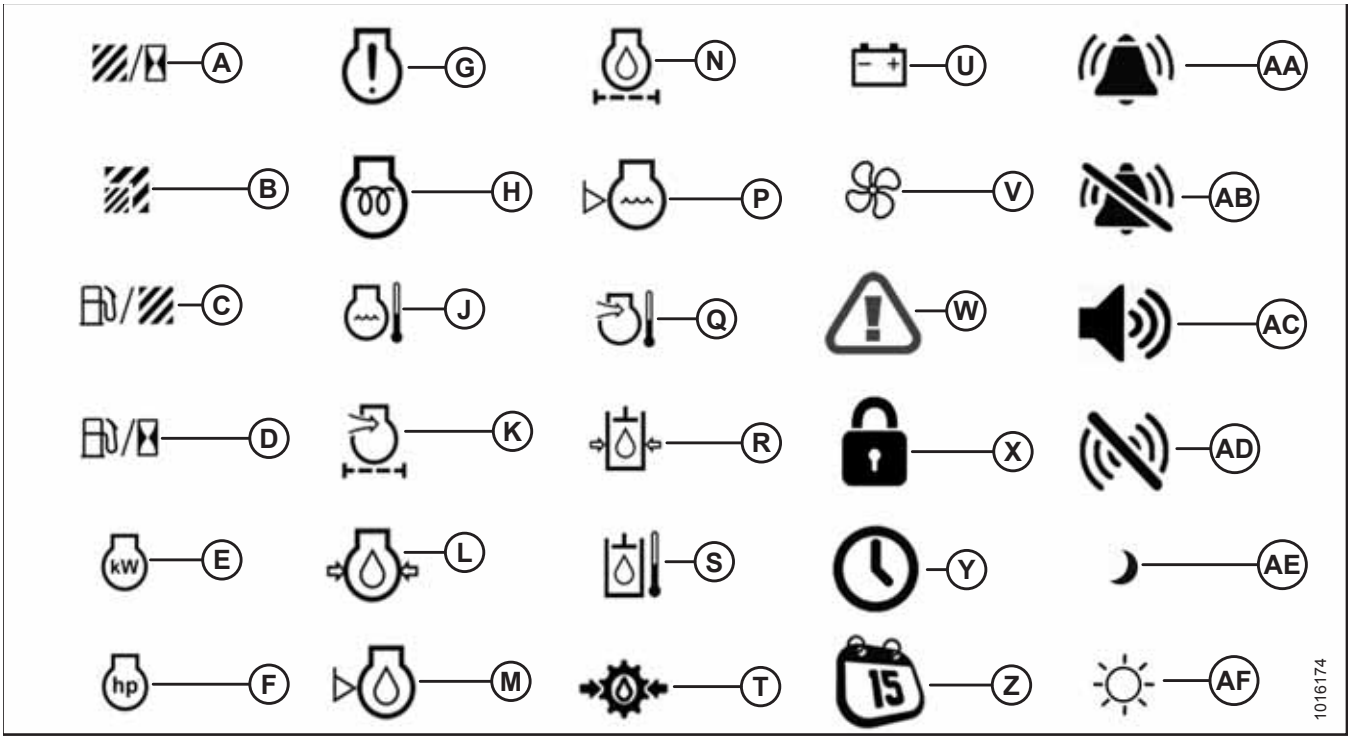

A - Acres/Hour
B - Sub Acres
C - Fuel/Acre
D - Fuel/Hour
E - Engine Power Kilowatt
F - Engine Power Horsepower
G - Engine Malfunction
H - Wait to Start
J - Engine Coolant Temperature
K - Engine Intake Air Filter
L - Engine Oil Pressure
M - Engine Oil Level
N - Engine Oil Filter
P - Engine Coolant Level
Q - Engine Air Intake Temperature
R - Hydraulic Oil Pressure
S - Hydraulic Oil Temperature
T - Transmission Oil Pressure
U - Battery/Voltage
V - Fan Speed
W - Caution (Yellow) / Danger (Red)
X - Function Locked
Y - Time
Z - Date
AA - Alarm
AB - Alarm Off
AC - Volume Level
AD - Sensor Disabled
AE - Night
AF - Day

4.3 Operating the Windrower

4.3.1 Operational Safety

CAUTION

Follow these safety precautions:

- **Wear close-fitting clothing and protective shoes with slip-resistant soles.**
- **Remove foreign objects from the machine and surrounding area.**
- **Carry with you any protective clothing and personal safety devices that could be necessary through the day. DO NOT take chances.**

You may need:

- **A hard hat**
- **Protective glasses or goggles**
- **Heavy gloves**
- **A respirator or filter mask**
- **Wet weather gear**
- **Protect against noise. Wear suitable hearing protection such as ear muffs or ear plugs to protect against loud noises.**
- **Follow all safety and operational instructions given in your operator's manuals. If you do not have a header manual, get one from your Dealer and read it thoroughly.**
- **NEVER attempt to start the engine or operate the machine except from the operator's seat.**
- **Check the operation of all controls in a safe clear area before starting work.**
- **Check for excessive vibration and unusual noises. If there is any indication of trouble, shut down and inspect the machine. Follow proper shutdown procedure. Refer to *Shutting down the Engine, page 120*.**
- **Operate only in daylight or good artificial light.**

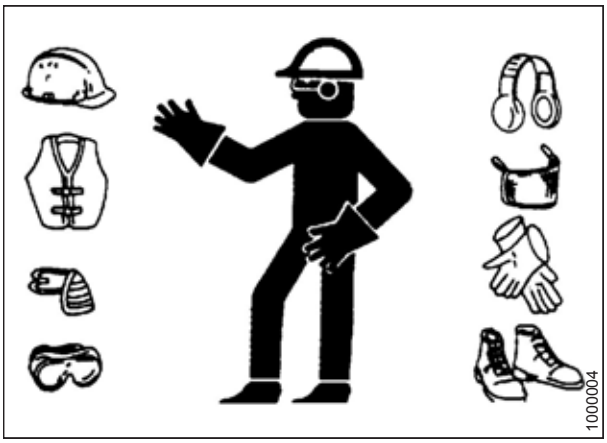

Figure 4.4: Safety Equipment

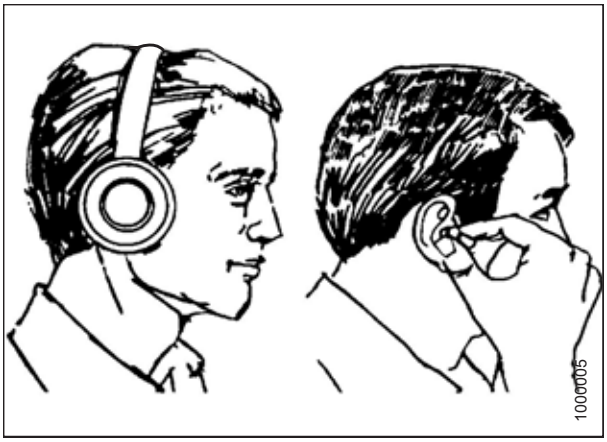

Figure 4.5: Safety Equipment

4.3.2 Break-in Period

The windrower is ready for normal operation. However, there are several items to check and watch out for during the first 150 hours.

DANGER

Before investigating an unusual sound or attempting to correct a problem, place ground speed lever (GSL) in PARK, shut off engine, and remove key.

IMPORTANT:

Until you become familiar with the sound and feel of your new windrower, be extra alert and attentive.

- Avoid unnecessary idling. If engine will be idling longer than 5 minutes after reaching operating temperature, turn ignition key OFF to stop the engine.
- Before taking the GSL out of PARK, let the hydraulic oil warm up to 32°C (90°F). You can view the hydraulic oil temperature on Run Screen 4 on the Harvest Performance Tracker (HPT) display. For instructions, refer to *Viewing Engine Cooling Data, page 123*.
- Check engine oil level frequently. Watch for any signs of leakage. If oil must be added, refer to *Checking Engine Oil Level, page 114*.
- Watch coolant gauge in cab for temperature rising beyond normal operating range. Check that coolant level at reserve tank (mounted next to radiator) stays between HOT and COLD marks on tank. Refer to *5.6.5 Checking Engine Coolant Level, page 288*.

  NOTE:

  If overheating problems occur, check for coolant leaks.

- Perform the break-in inspections specified in *5.2.1 Break-in Inspection Schedule, page 264*.

NOTE:

During the break-in period, a higher than usual oil consumption should be considered normal.

NOTE:

If windrower must be driven in cold weather (below freezing), let engine idle for 3 minutes, and then operate at moderate speed until oil has warmed up.

4.3.3 Preseason Checks / Annual Service

Follow these steps at the beginning of each season.

CAUTION

- **Review the operator's manual to refresh your memory on safety and operating recommendations.**
- **Review all safety signs and other decals on the windrower and note hazard areas.**
- **Be sure all shields and guards are properly installed and secured. Never alter or remove safety equipment.**
- **Be sure you understand and have practiced safe use of all controls. Know the capacity and operating characteristics of the machine.**
- **Store a properly stocked first aid kit and charged fire extinguisher on the windrower.**

1. Drain off excess hydraulic oil added for storage. For instructions, refer to *5.12.2 Draining Hydraulic Oil, page 329*.
2. Remove any plastic bags and/or tape from all sealed openings (air cleaner intake, exhaust pipe, fuel tank).
3. Charge and install the batteries. Be sure the terminals are clean and cables are connected securely.

4. Adjust the tension on the air conditioning (A/C) compressor belt. For instructions, refer to *5.5.5 Tensioning Air Conditioner Compressor Belts, page 275*.
5. Distribute A/C refrigerant by cycling the A/C switch. For instructions, refer to *Air Conditioning Compressor Coolant Cycling, page 111*.
6. Check the entire A/C system for leakage.
7. Perform annual maintenance. For instructions, refer to *5.2 Windrower Break-In Inspections and Maintenance Schedule, page 264*.

Air Conditioning Compressor Coolant Cycling

IMPORTANT:

Perform the following steps whenever the machine is first started after storage for more than one week:

1. Press the reduce (–) BLOWER SPEED switch (A) repeatedly until the lowest fan setting is reached.
2. Press the red area on the TEMPERATURE CONTROL switch (F) repeatedly until maximum heating is reached.
3. Press the A/C control (E) to OFF.
4. Start engine and operate at low idle until engine is warm.

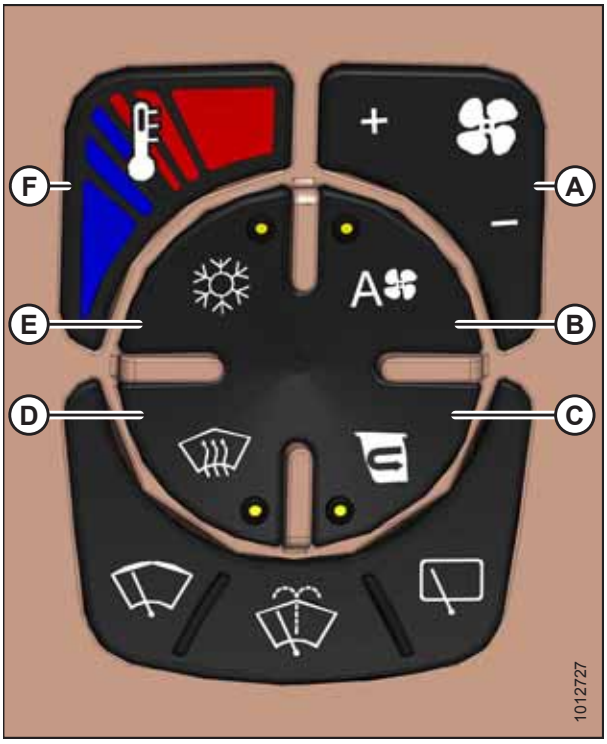

Figure 4.6: Climate Control

A - Blower Toggle Button
B - Outside Air Button
C - Recirculating Air Button
D - Windshield Defog/Defrost
E - Air Conditioning Button
F - Temperature Control

4.3.4 Daily Checks and Maintenance

Perform the following checks and recommended maintenance before operating the windrower every day:

1. Check the machine for leaks.

   NOTE:

   Use proper procedure when searching for pressurized fluid leaks. For instructions, refer to *5.6.6 Hoses and Lines, page 288*.

2. Check for missing or broken parts.
3. Clean the windows and mirrors to ensure good visibility in all directions. Stand on the platform to access the rear window. Hold onto the handholds on the cab front corners and stand on the header anti-slip strips to wash the front window.
4. Clean all lights and reflective surfaces to maintain visibility to others.
5. Perform daily maintenance. Refer to *5.2 Windrower Break-In Inspections and Maintenance Schedule, page 264*.

Filling Fuel Tank

The symbol inside the fuel gauge on the Harvest Performance Tracker (HPT) display will signal the Operator when the fuel level is low. Fill fuel tank daily, preferably at the end of the day's operation to help prevent condensation in the tank.

WARNING

To avoid bodily injury or death from unexpected startup of the machine, always stop the engine and remove the key from the ignition before leaving the operator's seat for any reason.

WARNING

- **To avoid personal injury or death from explosion or fire, do NOT smoke or allow flame or sparks near fuel tank when refueling.**
- **NEVER refuel the windrower when the engine is hot or running.**
- **To avoid electric discharge and the risk of a fire or explosion, ensure that the fuel delivery system is properly bonded and grounded. A bonded fuel delivery system has an electrically conductive and unbroken connection between all components of the fuel delivery system (fuel supply tank, transfer pump, transfer hose, nozzle, and others). A wire connection from the fuel delivery system to the machine chassis will equalize the static electric potential between the two machines, further reducing the chance of a static electric discharge. A properly grounded fuel delivery system has an electrically conductive connection from the fuel delivery system tank to earth ground to allow static and electrical charge dissipation.**

IMPORTANT:

Do **NOT** allow tank to empty. Running out of fuel can cause air locks and/or contamination of the fuel system. Refer to *Priming Fuel System, page 318*.

1. Stop windrower and remove the ignition key.
2. Clean the area around the fuel filler cap (A).
3. Turn fuel filler cap (A) counterclockwise until loose. Remove cap.
4. Fill tank with approved fuel. For fuel type and quantity, refer to the inside back cover.

   IMPORTANT:

   Do **NOT** completely fill the tank as space is required for expansion. A filled tank could overflow if exposed to a rise in temperature, such as direct sunlight.
5. Replace fuel tank filler cap (A), and turn cap clockwise until it clicks.

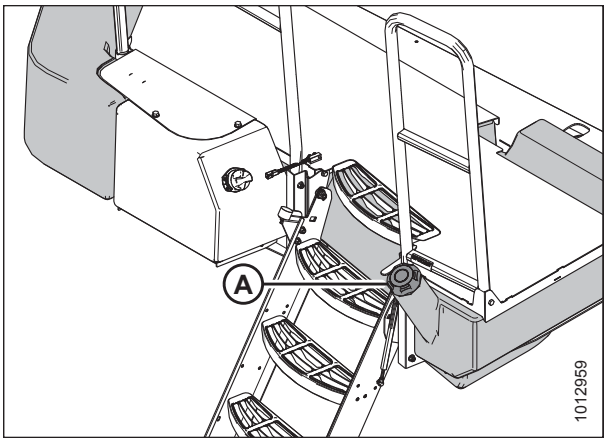

Figure 4.7: Fuel Tank Filler Cap

Filling the Diesel Exhaust Fluid Tank

The symbol inside the diesel exhaust fluid (DEF) gauge on the Harvest Performance Tracker (HPT) display will signal the Operator when DEF level is low.

WARNING

To avoid bodily injury or death from unexpected startup of the machine, always stop the engine and remove the key from the ignition before leaving the operator's seat for any reason.

1. Stop the engine and remove the key.
2. Clean around filler cap (A).
3. Turn cap (A) counterclockwise until loose and remove cap.

   NOTE:

   Filler cap for DEF tank is blue and the nozzle dispenser is smaller than that of the fuel tank.

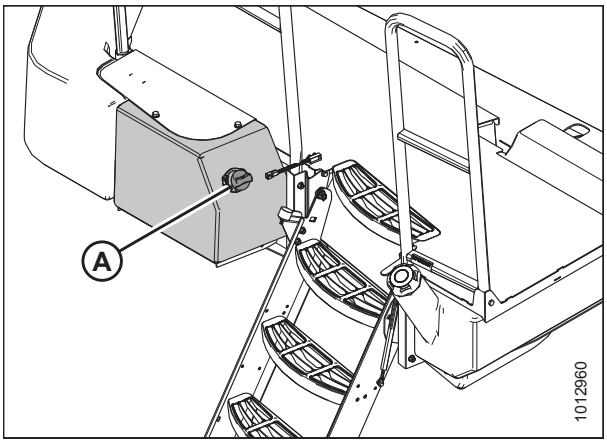

Figure 4.8: DEF Tank

CAUTION

Avoid contact with eyes. In case of contact, rinse immediately with water for 15 minutes.

4. Fill tank with approved DEF. Refer to the inside back cover..

   IMPORTANT:

   DEF is corrosive. Spilled DEF must be contained and absorbed by non-combustible absorbent material like sand, and then shovelled to a suitable container for disposal. If spilled on tank or any surface of the vehicle, rinse thoroughly with water.

   IMPORTANT:

   If the windrower temperature is going to be below 0°C (32°F), do **NOT** fill the DEF tank more than 75% full. When freezing, the DEF fluid will expand by approximately 7%. For storage information, refer to *5.1.1 Storing Lubricants and Fluids, page 261*.

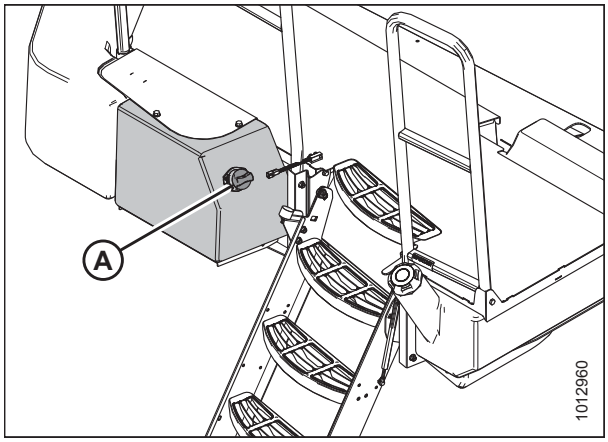

Figure 4.9: DEF Tank

5. Replace filler cap (A) and turn clockwise until tight.

Checking Engine Oil Level

Check engine oil level frequently and watch for any signs of leakage.

WARNING

To avoid bodily injury or death from unexpected startup of the machine, always stop the engine and remove the key from the ignition before leaving the operator's seat for any reason.

NOTE:

During the break-in period, a higher than usual oil consumption should be considered normal.

NOTE:

Oil can be checked without opening the hood.

1. Operate the engine at low idle and check for leaks at the filter and drain plug.
2. Stop the engine and remove the key. Wait about 5 minutes.
3. Remove dipstick (A) by turning it counterclockwise to unlock.
4. Wipe dipstick clean and reinsert it into engine.

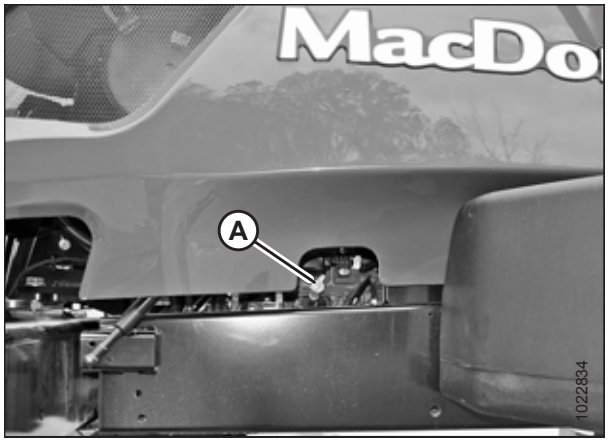

Figure 4.10: Dipstick Location

5. Remove dipstick again and check oil level. Oil level should be between LOW (L) and HIGH (H). If below the LOW mark, add oil.

   NOTE:

   Adding 1.9 liters (2 US quarts) will raise the level from LOW to HIGH. To add oil, refer to *Adding Engine Oil, page 283*.

6. Replace dipstick and turn it clockwise to lock.

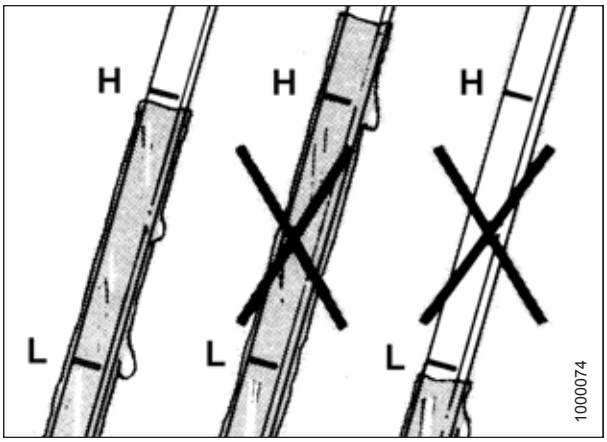

Figure 4.11: Engine Oil Level

4.3.5 Engine Operation

Starting the Engine

DANGER

- **Avoid possible injury or death from a runaway machine.**
- **This machine has safety devices which allow the engine to start only when the ground speed lever is in PARK, the steering wheel is locked in the PARK position, and the HEADER ENGAGE switch is in the OFF position. Under no circumstances are these devices to be deliberately rewired or misadjusted so that the engine can be started with controls out of NEUTRAL.**
- **Do NOT start the engine by shorting across the starter or starter relay terminals. If normal starting circuitry is bypassed, the machine will start with the drive engaged and move.**
- **Start the engine only from operator's seat with controls in PARK. NEVER start the engine while standing on ground. NEVER try to start the engine with someone under or near the machine.**
- **Before starting the engine, be sure there is plenty of ventilation to avoid asphyxiation.**

IMPORTANT:

Before starting the windrower, check fluid level of the following, and add fluid if necessary:

- Engine oil – refer to *Checking Engine Oil Level, page 114*
- Hydraulic oil – refer to *5.6.3 Checking Hydraulic Oil, page 284*
- Gearbox oil – refer to *5.6.9 Checking Engine Gearbox Lubricant Level and Adding Lubricant, page 291*

IMPORTANT:

Do **NOT** tow the machine to start the engine. Damage to hydrostatic drives will result.

NOTE:

Before taking the GSL out of PARK, let the hydraulic oil warm up to 32°C (90°F). You can view the hydraulic oil temperature on Run Screen 4 on the Harvest Performance Tracker (HPT) display. For instructions, refer to *Viewing Engine Cooling Data, page 123*.

1. Ensure the cab-forward or engine-forward directional lock (A) is engaged at the base of the steering column.

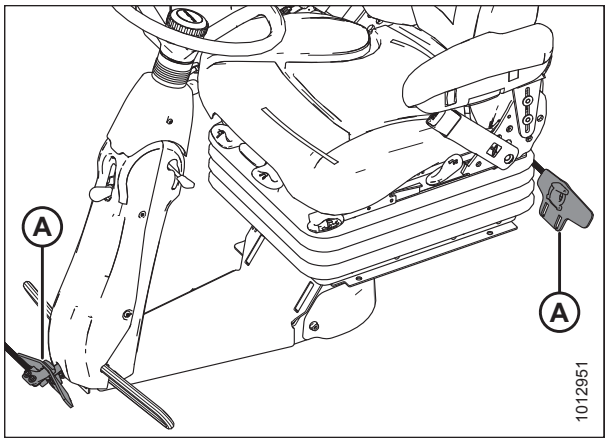

Figure 4.12: Direction Locks

2. Move ground speed lever (GSL) (A) into PARK (C).
3. Turn steering wheel until it locks. It may be possible to move the steering wheel slightly in the locked position.

   IMPORTANT:

   Do **NOT** attempt to force the wheel out of the locked position or damage to the steering system may occur.
4. Fasten seat belt.
5. Push HEADER ENGAGE switch (B) to ensure it is in the OFF position.

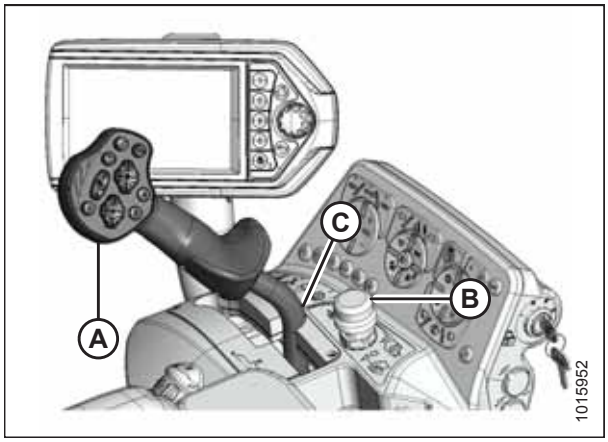

Figure 4.13: Operator Controls

6. Turn IGNITION switch (A) to the ON position; the Harvest Performance Tracker (HPT) display (B) will illuminate. If HPT is still booting up, wait for WAIT TO START (WTS) symbol (C) to disappear before trying to start engine.
7. Check that red PARK symbol light (D) is ON and that there are no error messages on screen.
8. Press HORN button (E) three times.

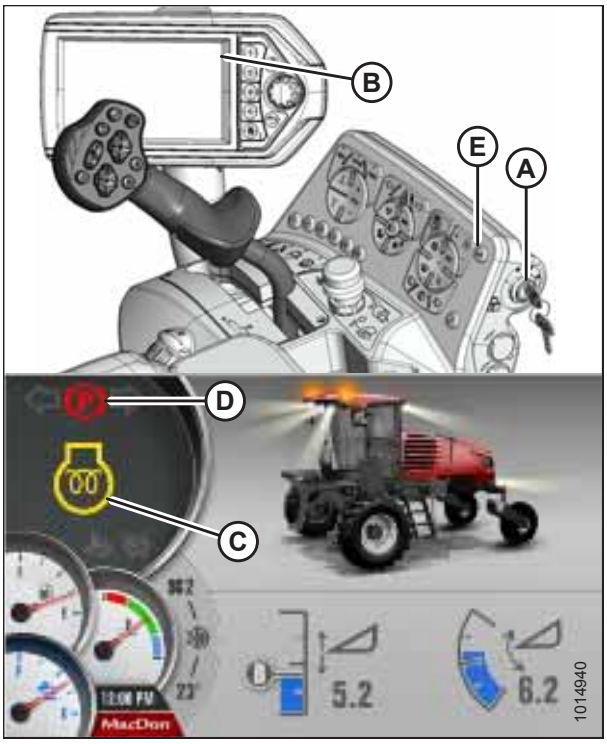

Figure 4.14: Console and HPT Run Screen

9. Turn the IGNITION switch to crank (A).

   NOTE:

   When the engine starts and the header is not engaged, the HPT will display the header disengaged page (B).

   IMPORTANT:

   - Do **NOT** operate the starter for longer than 15 seconds at a time.
   - If the engine does not start, wait at least 2 minutes before trying again.
   - If you crank the engine for more than 30 seconds within a 2-minute period, the engine will lock the starter circuit to prevent overheating, and a flashing WTS symbol will appear on the display. Wait for the WTS symbol to stop flashing before attempting to crank engine again.

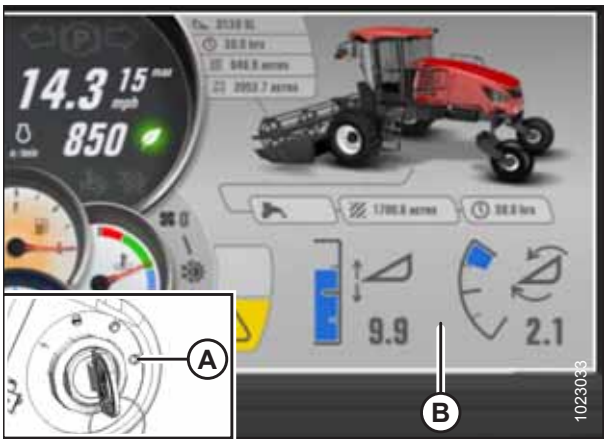

Figure 4.15: HPT Header Disengaged Screen

NOTE:

When the engine temperature is below 5°C (40°F), the engine will cycle through a period where it appears to labor until it warms up. Do **NOT** operate the engine above 1500 rpm until the HPT engine temperature gauge is above the blue range (A).



Figure 4.16: HPT No Header Screen

Engine Start Troubleshooting Tips

If the windrower will not start normally, refer to the following troubleshooting table:

IMPORTANT:

Do **NOT** tow the machine to start engine. Damage to the hydrostatic drives will result.

Table 4.1 Engine Start Troubleshooting

Problem	Solution
Controls not in NEUTRAL	• Move GSL to NEUTRAL • Move steering wheel to locked (centered) position • Disengage HEADER switch
Operator's station not locked	• Adjust position of operator's station • Ensure lock is engaged
Neutral interlock misadjusted	• Contact MacDon Dealer
No fuel to engine	• Fill empty fuel tank • Replace clogged filter • Check for blocked or damaged fuel lines
Old fuel in tank	• Drain tank • Refill with fresh fuel
Water, dirt, or air in fuel system	• Drain, flush, fill, and prime system
Improper type of fuel	• Drain tank • Refill with correct fuel
Crankcase oil too heavy	• Replace with recommended oil
Low battery output	• Test the battery • Check battery electrolyte level

Table 4.1 Engine Start Troubleshooting (continued)

Problem	Solution
Poor battery connection	• Clean and tighten loose connections
Faulty starter	• Contact MacDon Dealer
Wiring shorted, circuit breaker open	• Check continuity of wiring and breaker (manually reset)
Faulty injectors	• Contact MacDon Dealer

Programming the Eco Engine Control

Engine speed can be programmed to operate at reduced rpm to lower fuel and diesel exhaust fluid (DEF) consumption, and to reduce in-cab noise levels. The set-point for engine speed can be adjusted in increments of 100 rpm from 1800 to 2300 rpm in the Harvest Performance Tracker (HPT) QuickMenu. While the header is engaged, the system can easily be activated and deactivated (depending on field conditions) using the Eco Engine Control (EEC) button (A) on the console. When the engine is running at less than full speed, you will notice a small reduction in the maximum reel, draper, and ground speeds.

The EEC feature is turned ON or OFF by pressing the EEC button (A) on the operator's console. EEC will only be available when the header is engaged. The GREEN LEAF symbol on the HPT display indicates that the EEC is active. If EEC is turned OFF, or the header is disengaged, the LEAF symbol will appear grayed out. The EEC throttle limit can be adjusted at any time.

1. To open the QuickMenu system while in any run screen, press the scroll knob (A) on the HPT.

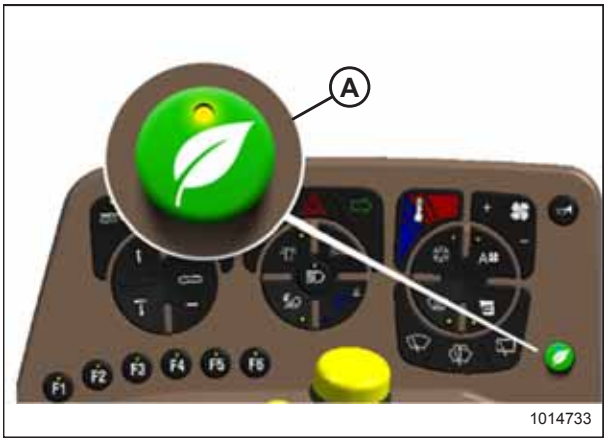

Figure 4.17: Eco Engine Control (EEC) Button



Figure 4.18: HPT Scroll Knob/Select Button

2. Use the HPT scroll knob to move the red cursor to the ECO THROTTLE LIMIT (A) value.
3. Press the HPT scroll knob to select the ECO THROTTLE LIMIT (A) adjustment function.
4. Adjust the ENGINE rpm value using the HPT scroll knob.
5. Press the HPT scroll knob to program the adjusted value.



Figure 4.19: HPT Display

Shutting down the Engine

CAUTION

Park on a flat, level surface with the header on the ground, the ground speed lever in PARK position, and the steering wheel in locked position (centered). Wait for the HPT to beep and display a red P symbol to confirm the park brakes have engaged.

IMPORTANT:

Before stopping the engine, run at low idle for approximately 5 minutes to cool hot engine parts (and allow turbocharger to slow down while engine oil pressure is available).

1. Lower the header.
2. Place ground speed lever (GSL) (B) into PARK.
3. Lock the steering wheel.
4. Turn ignition key (A) counterclockwise to the OFF position.

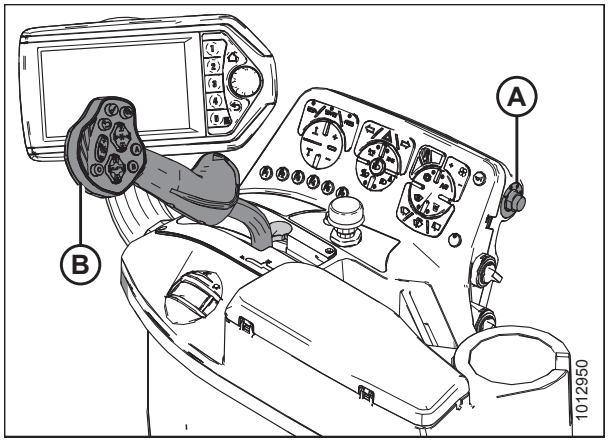

Figure 4.20: Console

Engine Temperature

The engine temperature gauge (A) is displayed in the lower left corner of the Harvest Performance Tracker (HPT) display.

Normal engine operating temperature is indicated when the needle is in the green range of the gauge.

If the engine temperature exceeds 105°C (221°F), the needle will move to the red range of the gauge. Depending on the temperature, the engine will trigger a fault code and an amber caution or red stop light will illuminate on the HPT display.

When the engine temperature is below 5°C (40°F), the engine will cycle through a period where it appears to labor until the engine warms up. Do **NOT** operate engine above 1500 rpm until the HPT engine temperature gauge is above the blue range.



Figure 4.21: HPT Display – Engine Temperature Gauge

NOTE:

Before taking the ground speed lever (GSL) out of PARK, let the hydraulic oil warm up to 32°C (90°F). You can view the hydraulic oil temperature on Run Screen 4 on the Harvest Performance Tracker (HPT) display. For instructions, refer to *Viewing Engine Cooling Data, page 123*.

Engine Oil Pressure

The nominal engine oil pressure is 69 kPa (10 psi) at low idle and 380 kPa (55.1 psi) at maximum rated speed.

If the oil pressure drops below the preset level of 52 kPa (7.5 psi), the Harvest Performance Tracker (HPT) displays an engine telltale fault code to identify the issue.

If the red STOP ENGINE light illuminates, stop the engine **IMMEDIATELY** and investigate.

If the amber CAUTION light illuminates, stopping immediately is optional. You may continue operations and investigate later, but you are **STRONGLY** advised to monitor the situation carefully.

Exhaust System Cleaning

The exhaust aftertreatment system uses diesel exhaust fluid (DEF) and selective catalyst reduction (SCR) technology to reduce the emission of nitrogen oxides (NOx). The process involves injecting DEF (a nitrogenous compound which decomposes into ammonia) into the exhaust over a catalyst. The ammonia reacts with NOx, producing harmless nitrogen and water.

Automatic exhaust system cleaning events maintain the performance of the aftertreatment system by increasing exhaust temperatures in order to remove the buildup of crystallized DEF. Automatic cleaning occurs any time during machine operation as long as the INHIBIT SCR CONDITIONING switch is OFF. Turn on the INHIBIT SCR CONDITIONING switch if the environment is not suitable for high exhaust temperatures (e.g., inside a building). The INHIBIT SCR CONDITIONING switch is intended as a temporary measure. If the INHIBIT switch is left on for an extended period, the engine will derate until manual SCR conditioning is performed.

Activate the MANUAL SCR CONDITIONING exhaust system cleaning if the automatic exhaust system cleaning was deactivated during normal operation. Engine speed may vary between 1000 and 1400 rpm during manual exhaust system cleaning.

Activating the Exhaust Aftertreatment Functions

Follow these steps to access the exhaust aftertreatment functions on the Harvest Performance Tracker (HPT) display.

1. To display the main menu, press the soft key 5 / menu button (A) on the HPT.
2. To display the manual / inhibit SCR conditioning switches, press soft key 5 / menu button (A) next to the EXHAUST AFTERTREATMENT icon (B).

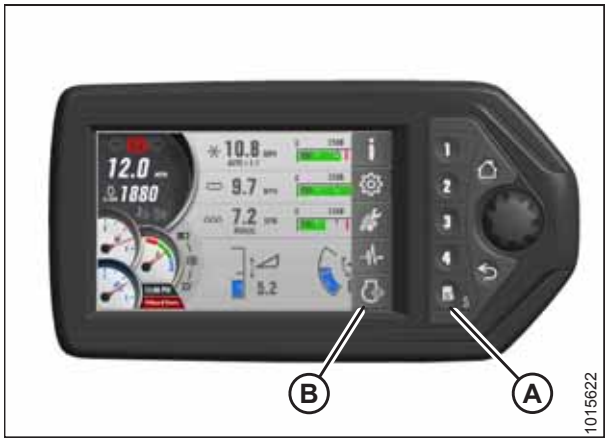

Figure 4.22: HPT Display

3. To inhibit SCR conditioning, press soft key 5 / menu button (A) next to the INHIBIT SCR CONDITIONING icon (B), and hold for 3 seconds. The SCR CONDITIONING INHIBIT icon (C) will appear under the engine rpm display.

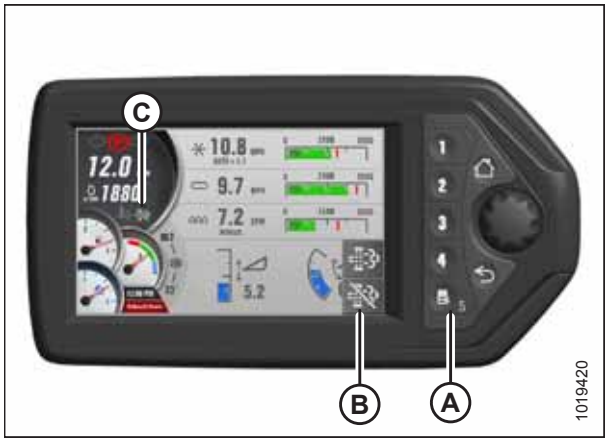

Figure 4.23: HPT Display

4. To select manual SCR conditioning, press soft key 4 (A) next to the MANUAL SCR CONDITIONING icon (B), and hold for 3 seconds. The high exhaust system temperature (HEST) icon (C) appears highlighted under the rpm display during system cleaning.

   NOTE:

   The HEST icon also appears during normal operation when exhaust temperature exceeds the maximum temperature threshold. The icon remains on until the exhaust temperature drops below the minimum temperature threshold.



Figure 4.24: HPT Display

Viewing Engine Cooling Data

You can check current engine cooling information on Run Screen 4 on the Harvest Performance Tracker (HPT) display.

Figure 4.25: Run Screen 4 – Cooling Data



A - Fan Speed
B - Hydraulic Oil Temperature
C - Engine Air Intake Temperature
D - Engine Coolant Temperature
E - Header Height
F - Header Tilt

To display the windrower's cooling data:

1. Press soft key 4 (A) on the Harvest Performance Tracker (HPT) to open the COOLING DATA display.

   NOTE:

   Soft keys 1–5 also function as buttons within menus.

   NOTE:

   The engine fan speed will increase/decrease, depending on cooling requirements. The fan speed icon will flash in unison with the icon of the parameter that is controlling the fan.

   NOTE:

   The engine fan will automatically reverse on a set time interval, or when one of the system temperatures gets high enough. No operator input is required to reverse the fan.

   You can view

   - Fan speed
   - Engine air intake temperature
   - Engine coolant temperature



Figure 4.26: HPT Display

4.3.6 Operating the Windrower

Entering and Exiting the Windrower

CAUTION

To prevent slipping and possible injury, ALWAYS face the windrower and use the hand rail when dismounting (or mounting). NEVER attempt to get on or off a moving windrower. Before leaving the operator's seat for any reason:

- **Park on a flat, level surface with the ground speed lever in PARK position and the steering wheel in locked position (centered). Wait for the HPT to beep and display a red P symbol to confirm the park brakes have engaged.**
- **Fully lower header and reel.**
- **Disengage header drives.**
- **To avoid bodily injury or death from unexpected startup of machine, always stop engine and remove key from ignition.**
- **Turn off lights unless required for inspection purposes.**
- **Release seat belt.**
- **Turn off wipers.**
- **Raise armrest and steering wheel for easier exit and re-entry.**
- **Lock the cab door when leaving the windrower unattended. (When the door is locked, it can still be opened from inside the cab.)**

A swing-away platform with stairs (A) is provided on the left side of the windrower to accommodate cab-forward and engine-forward access to the operator's station as well as several maintenance tasks.

Two doors (B) are provided for cab entry and exit in either cab-forward mode or engine-forward mode. Enter the cab using the door opposite the operator's console.

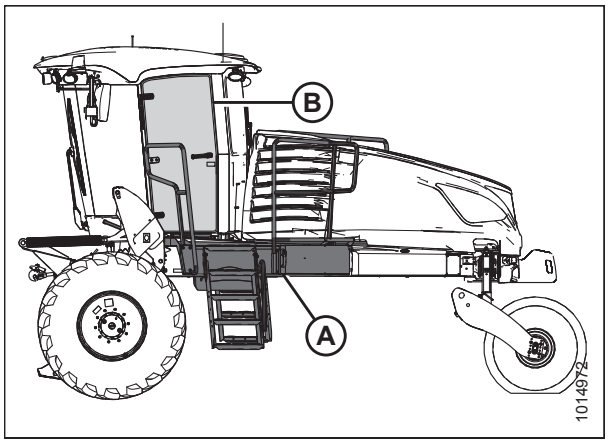

Figure 4.27: Platforms and Doors

Adjusting Ground Speed Limit

The windrower has the following selectable ground speed limits depending on seat position:

Direction of Travel	Selectable Ground Speed Limits
Cab-forward	16, 19, 23, 29 km/h (10, 12, 14, 16, 18 mph)
Engine-forward	16, 29, 43 km/h (10, 18, 27 mph)

To adjust the ground speed limit, follow these steps:

1. Press the scroll knob (A) on the Harvest Performance Tracker (HPT) while in any run screen to open the QuickMenu system.



Figure 4.28: HPT Scroll Knob / Select Button

2. To scroll to the GROUND SPEED LIMIT selectable area (A), use the HPT scroll knob to move the red cursor.
3. Press the HPT scroll knob to select, and scroll to adjust the ground speed limit values.

   NOTE:

   Ground speed limit is also changed by simultaneously pressing the GSL shift button on back of GSL and scrolling.



Figure 4.29: HPT Display

Driving Forward in Cab-Forward Mode

CAUTION

Operate both steering wheel and ground speed lever slowly for familiarization. Avoid the common tendency of new Operators to oversteer.

In cab-forward mode, the operator's station is facing away from the engine. If necessary, swivel operator's seat to cab-forward position as follows:

WARNING

Do NOT drive windrower on road in cab-forward configuration unless it is equipped with the proper lighting and markings for cab-forward road travel.

WARNING

Outside of North America, do NOT drive windrower on the road in cab-forward mode, as lighting/reflector visibility will not be compliant with road regulations.

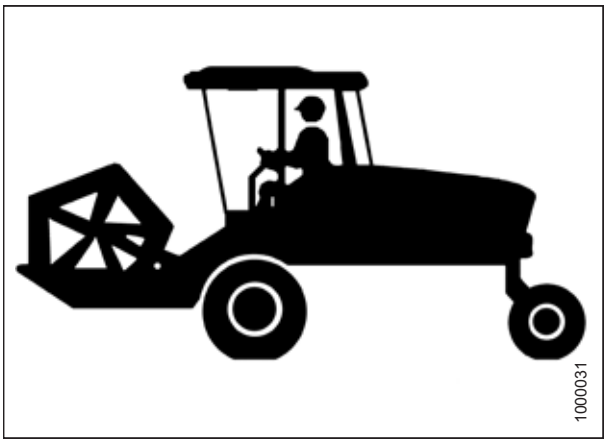

Figure 4.30: Cab-Forward Mode

1. Place ground speed lever (GSL) (A) in PARK. Engine can be running.

   IMPORTANT:

   If GSL is NOT in PARK, damage to the GSL cable may result when swivelling operator's station.

2. Pull up on knob (B) and hold to release latch (C) at base of steering column.
3. Turn steering wheel counterclockwise to pivot operator's station clockwise 180° until pin engages latch to secure operator's station in new position.
4. Ensure seat belt is fastened.
5. Start engine if not running. For instructions, refer to *Starting the Engine, page 115*.
6. Set the desired ground speed limit. For instructions, refer to *Adjusting Ground Speed Limit, page 124*.

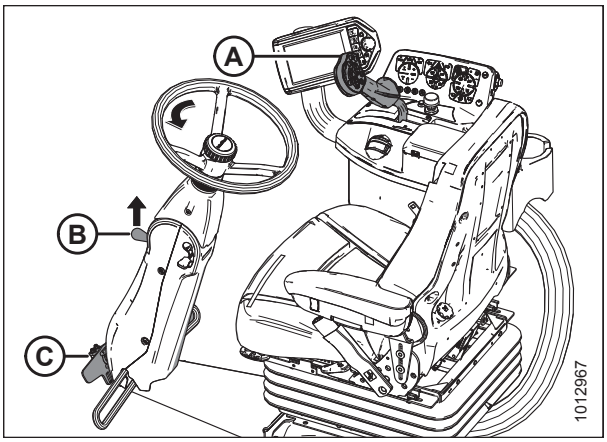

Figure 4.31: Operator Station

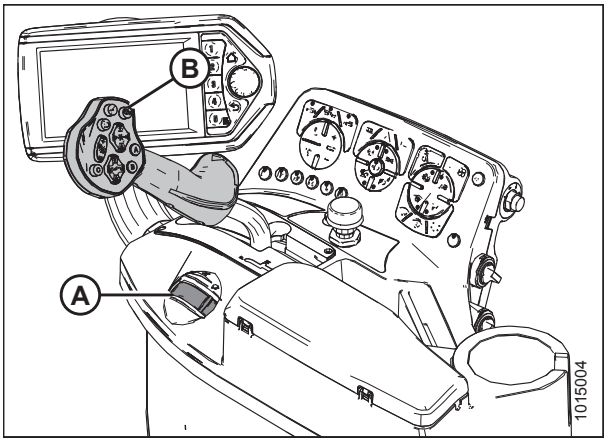

Figure 4.32: Console

CAUTION

Check to be sure all bystanders have cleared the area.

7. Slowly push throttle (A) to full forward (operating speed).
8. Move the GSL (B) out of PARK and slowly forward to desired speed.

   NOTE:

   The transmission is most efficient with the engine at full speed and the GSL fully forward. The windrower can be equipped with an automatic steering system for use in the field. An automated steering system is available as an option and can be installed by a MacDon Dealer. The GSL has been pre-wired at the factory with a switch. For more information, refer to *6.1.1 Automated Steering Systems, page 385*.

Driving in Reverse in Cab-Forward Mode

WARNING

Back up slowly. Steering is opposite to normal when reversing. Hold steering wheel at the bottom and turn wheel in direction you want the rear of the machine to travel.

1. Move throttle lever (A) to a mid-range position.

   NOTE:

   Reversing in low speed range and at reduced engine speed is recommended since steering will be less sensitive than at higher speed settings.

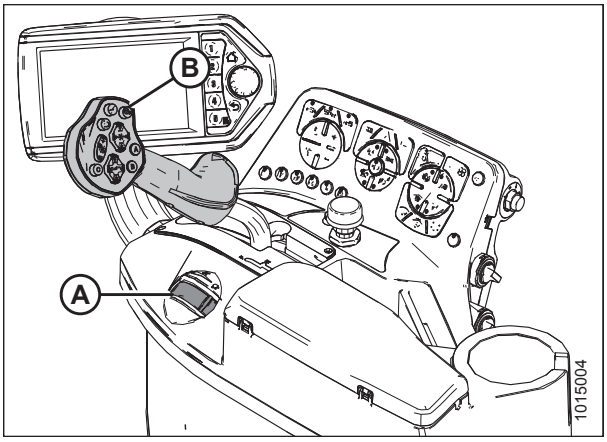

Figure 4.33: Console

CAUTION

Check again to be sure all bystanders have cleared the area.

2. Move the ground speed lever (GSL) (B) rearward to desired speed.

3. Steer as shown.

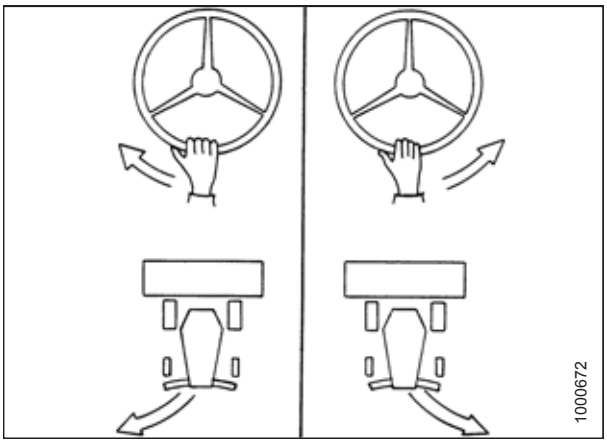

Figure 4.34: Cab-Forward Mode

Driving Forward in Engine-Forward Mode

In the engine-forward mode, the operator's station is facing toward the engine. If necessary, swivel the operator's station to engine-forward position as follows:



Figure 4.35: Engine-Forward – Seat Faces Engine

CAUTION

Park on a flat, level surface with the ground speed lever in PARK position and the steering wheel in locked position (centered). Wait for the HPT to beep and display a red P symbol to confirm the park brakes have engaged.

1. Place ground speed lever (GSL) (A) in PARK and lock (center) the steering wheel. The engine can be running.

   IMPORTANT:

   If GSL is **NOT** in PARK, damage to the GSL cable may result when swivelling operator's station.

2. Pull up on knob (B) and hold to release latch (C) at the base of the steering column.
3. Turn the steering wheel clockwise to pivot the operator's station counterclockwise 180° until the pin engages the latch to secure the operator's station in the new position.
4. Start the engine (if not already running). For instructions, refer to *Starting the Engine, page 115*.
5. Use the Harvest Performance Tracker (HPT) to adjust the maximum speed setting to 43 km/h (27 mph). For instructions, refer to *Adjusting Ground Speed Limit, page 124*.
6. Slowly push throttle (A) to full forward (operating speed).

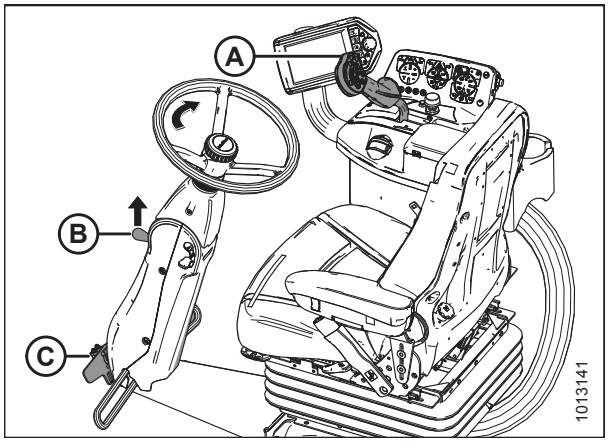

Figure 4.36: Engine-Forward – Seat Faces Engine

CAUTION

Check to be sure all bystanders have cleared the area.

7. Slowly move the GSL (B) forward to the desired speed.

   NOTE:

   The transmission is most efficient with the engine at full speed and the GSL fully forward.

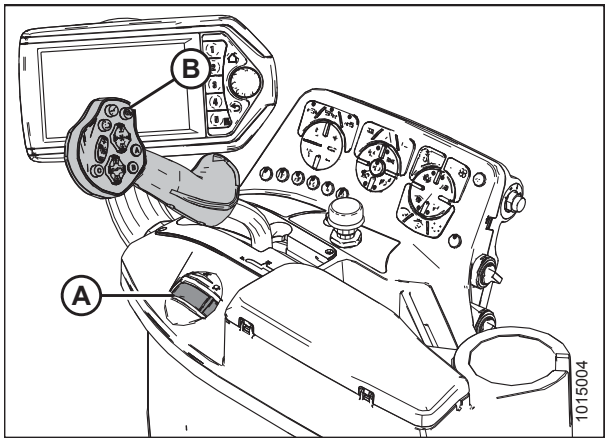

Figure 4.37: Console

CAUTION

Operate both steering wheel and ground speed lever slowly while becoming familiar with the machine. Steering can be sensitive; avoid the tendency of new Operators to overcorrect.

8. If more tractive (lugging) power is required (e.g., when driving up a ramp, up a hill, or out of a ditch):
   a. Move the GSL (B) closer to NEUTRAL.
   b. Reduce max speed setting to 16 km/h (10 mph) by holding the shift button on the GSL while scrolling downwards, or by reducing the max speed setting using the QuickMenu. For instructions, refer to *Adjusting Ground Speed Limit, page 124*.
9. Once the lugging condition no longer exists:
   a. Set GSL (B) to **NOT MORE THAN HALF** maximum forward speed.
   b. Adjust the maximum speed setting back to 43 km/h (27 mph). For instructions, refer to *Adjusting Ground Speed Limit, page 124*.

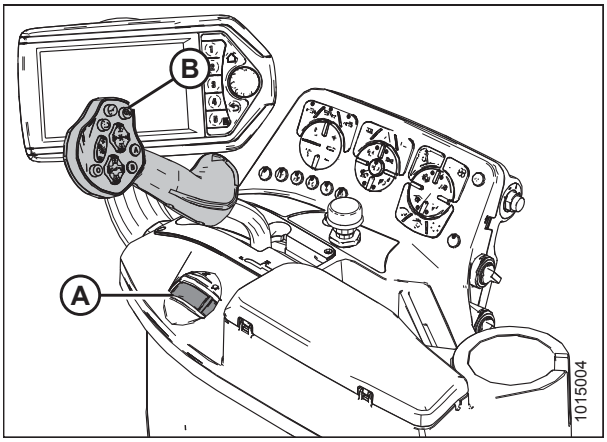

Figure 4.38: Console

Driving in Reverse in Engine-Forward Mode

WARNING

Back up slowly. Steering is opposite to normal when reversing. Hold steering wheel at the bottom and turn wheel in direction you want the rear of the machine to travel.

1. Move throttle lever (A) to a mid-range position.

   NOTE:

   Reversing in low speed range and at reduced engine speed is recommended since steering will be less sensitive than at higher speed settings.

2. Move the ground speed lever (GSL) (B) rearward to desired speed.

CAUTION

Check to be sure all bystanders have cleared the area.

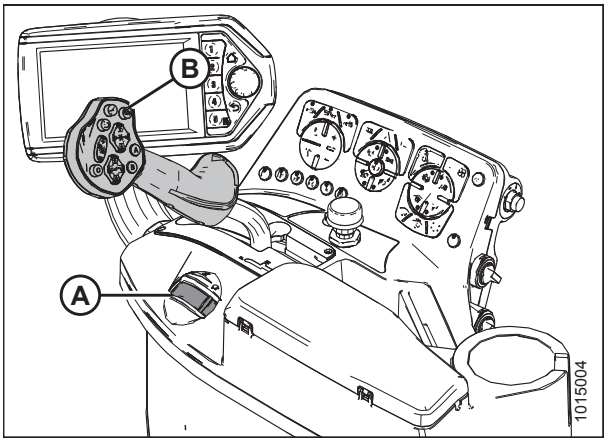

Figure 4.39: Console

3. Steer as shown.

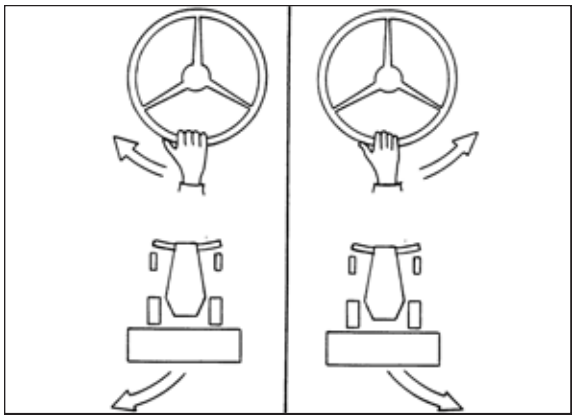

Figure 4.40: Steering the Windrower

Spin Turning

Hydrostatic steering provides significantly more maneuverability than mechanical steering.

CAUTION

Be sure area is clear before making turns. Although windrower pivots on the spot, the ends of the header travel faster and in a large arc.

1. Move ground speed lever (GSL) (A) out of PARK towards the seat and hold.
2. Slowly turn the steering wheel in the desired direction of turn. The windrower will pivot between the drive wheels.
3. To increase the turn radius, slowly move the GSL away from NEUTRAL. Remember that this will increase ground speed as well.
4. To stop the turn, slowly turn the steering wheel back to its centered position.

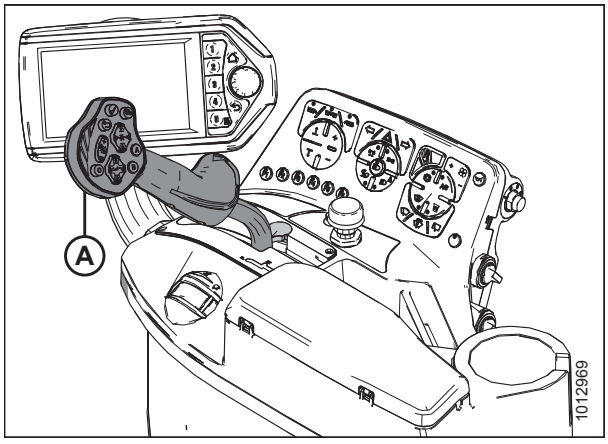

Figure 4.41: Console

Stopping

WARNING

Do NOT move ground speed lever rapidly back to NEUTRAL. You may be thrown forward by a sudden stop and wheels may skid, reducing steering control. Always wear a seat belt when operating windrower.

CAUTION

Park on a flat, level surface with the ground speed lever in PARK position and the steering wheel in locked position (centered). Wait for the HPT to beep and display a red P symbol to confirm the park brakes have engaged.

1. Anticipate stopping and **SLOWLY** return the ground speed lever (GSL) (A) to NEUTRAL and into PARK.
2. Turn the steering wheel until it locks.
3. Move throttle lever (B) to low-idle position.

   IMPORTANT:

   Before stopping the engine, run at low idle for approximately 5 minutes to cool hot engine parts (and allow the turbocharger to slow down while engine oil pressure is available).

   NOTE:

   Avoid unnecessary idling. Stop the engine if it will be idling for longer than 5 minutes.

   NOTE:

   Brakes are automatically engaged when steering wheel is locked in PARK position.
4. Turn the ignition key counterclockwise to OFF position.

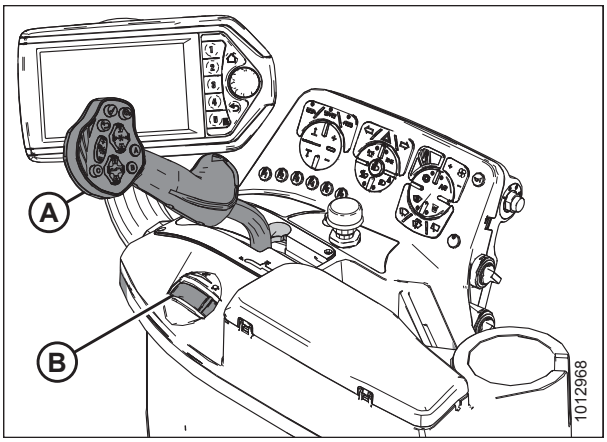

Figure 4.42: Console

Viewing Performance Data

You can check current performance information on Run Screen 3 on the Harvest Performance Tracker (HPT) display.

Figure 4.43: Run Screen 3 – Performance Data

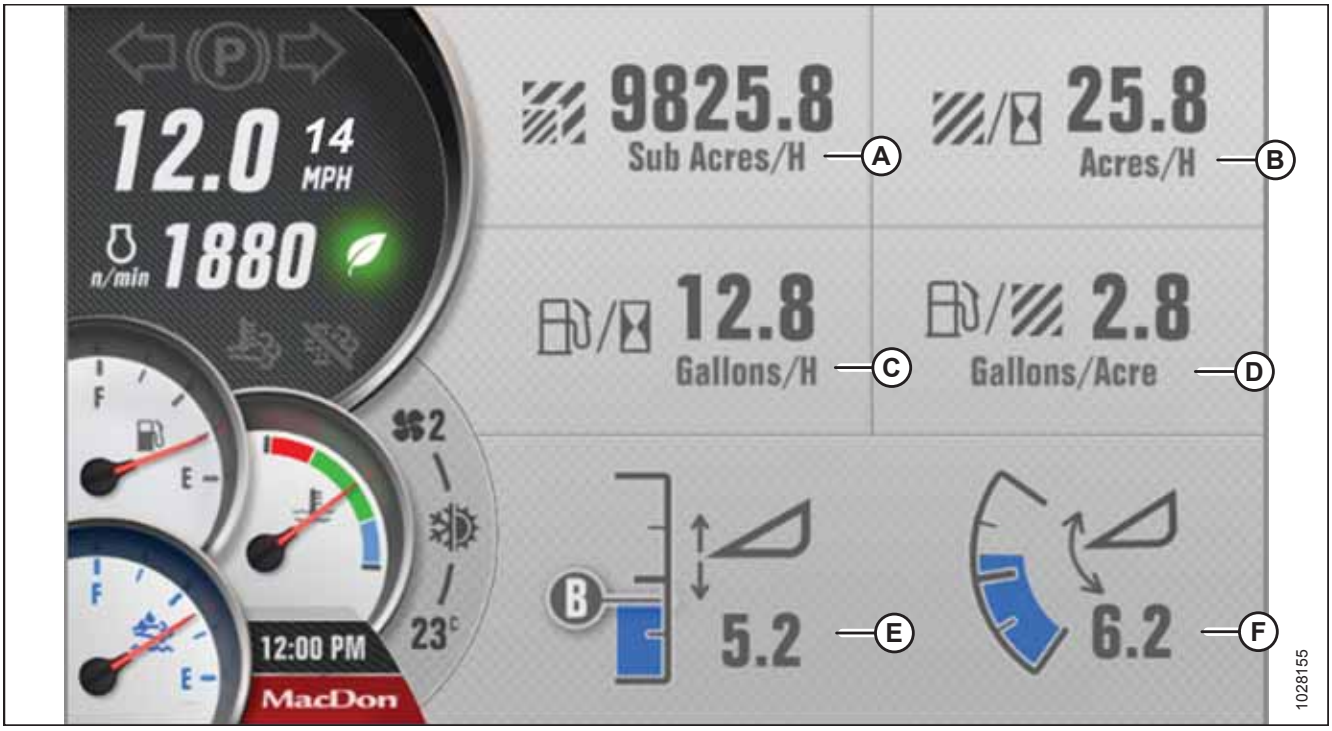

A - Sub Acres **B - Acres per Hour** **C - Fuel Used per Hour**

D - Fuel Used per Acre **E - Header Height** **F - Header Tilt**

To display the windrower's performance data:

1. Press soft key 3 (A) on the Harvest Performance Tracker (HPT) to open the PERFORMANCE DATA display.

   NOTE:

   Soft keys 1–5 also function as buttons within menus.

   NOTE:

   The sub-acres can also be reset from this screen. Press the HPT scroll knob to highlight and select the sub-acres. If you press the HPT scroll knob a second time, the message RESET OR EXIT appears on the display. Select RESET to reset the sub-acres to zero and return to the same highlighted sub-acres. Select EXIT or press the BACK or HOME button to dismiss the message without resetting the sub-acres.

   You can view

   - Sub acres (A)
   - Acres per hour (B)
   - Fuel used per hour (C)
   - Fuel used per acre (D)



Figure 4.44: HPT Display

4.3.7 Transporting

Driving on Road in Engine-Forward Mode

The M1240 Windrower is designed to be driven on the road with the engine facing forward to provide better visibility for the Operator and improved stability for the machine.

Windrowers sold in North America can also be driven on roads in cab-forward mode, with or without a header attached, but at a reduced speed, under restricted conditions. For instructions, refer to *Driving on Road in Cab-Forward Mode, page 135*.

CAUTION

Windrowers sold outside of North America: Do NOT drive windrower on the road in cab-forward mode, as lighting and marking will not be compliant with road regulations.

WARNING

Collision between windrower and other vehicles may result in injury or death.

WARNING

When driving windrower on public roadways:

- **Obey all highway traffic regulations in your area. Use pilot vehicles in front and rear of windrower if required by law.**
- **Use slow-moving vehicle emblem and flashing warning lights unless prohibited by law.**
- **If width of attached header impedes other vehicle traffic, remove header and install a MacDon approved weight box.**

WARNING

Do NOT drive windrower on a road or highway at night or in conditions that reduce visibility, such as fog or rain. The width of the windrower may not be apparent under these conditions.

CAUTION

Check local laws for width regulations and lighting and marking requirements before transporting on roads.

Before driving windrower on a roadway:

1. Ensure header engage switch (A) is off (down position).
2. Clean and ensure flashing amber lights, red tail lights, and head lights are working properly.
3. Clean all reflective surfaces and slow moving vehicle signs.
4. Adjust interior rear view mirror and clean windows.
5. Ensure header (if attached) is fully raised and header lift safety props are engaged.
6. If width of attached header impedes other vehicle traffic, remove header and install a MacDon approved weight box. For instructions, refer to *Preparing Windrower to Tow a Header, page 139*.
7. If towing a header, refer to *Towing Header with Windrower, page 138*.
8. Press switch (A) for road lights. Always use these lights when driving windrower on roads.
9. Press switch (B) for high/low beams as required when other vehicles are approaching.

   IMPORTANT:

   Do **NOT** use field lights on the road; other drivers may be confused by them.
10. Press switch (C) to activate beacons.
11. Press switch (D) to activate hazard lights.

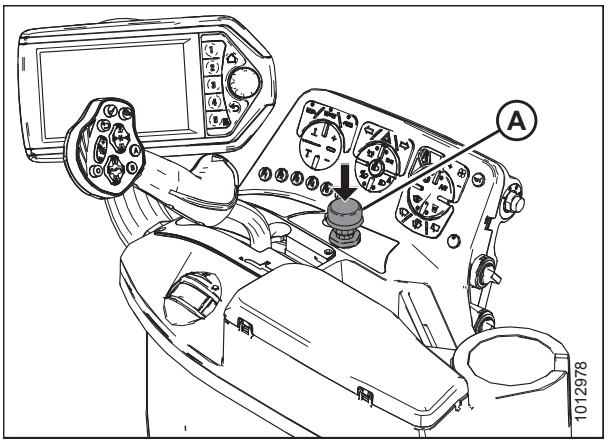

Figure 4.45: Header Engage Switch

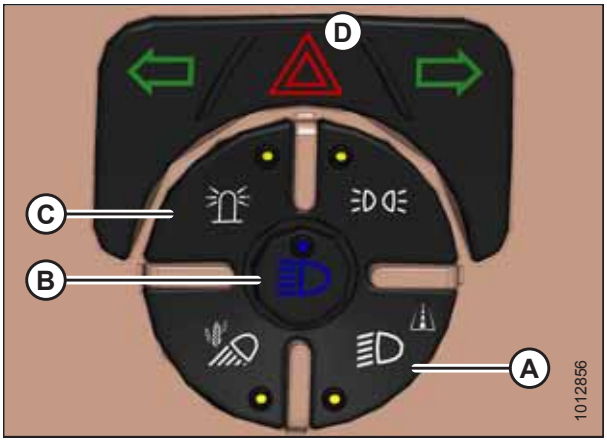

Figure 4.46: Light Switches

12. Set the desired maximum ground speed limit. For instructions, refer to *Adjusting Ground Speed Limit, page 124*.

    NOTE:

    Maximum ground speed can be set while the windrower is moving. Anticipate acceleration or deceleration if changing maximum speed while moving.

13. Slowly push throttle (A) to full forward (operating speed).

CAUTION

Check to be sure all bystanders have cleared the area.

15. Move the GSL (B) out of PARK and slowly forward to desired speed.

16. If towing a header, refer to *Towing Header with Windrower, page 138*.

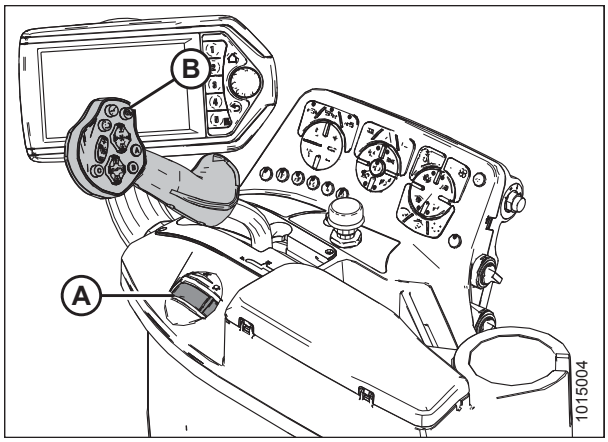

Figure 4.47: Console



Figure 4.48: Towing a Header

WARNING

To avoid serious injury or death from loss of control:

- **Do NOT make abrupt changes in steering direction.**
- **Anticipate turns and steep slopes by slowing down well in advance. Before making an abrupt turn, pull back on the ground speed lever (GSL) as steering is more responsive at reduced speeds.**
- **Do NOT rapidly accelerate or decelerate while turning.**

When traveling on steep slopes:

- **Move GSL closer to NEUTRAL to reduce speed.**
- **Lower header.**
- **If the ground speed is greater than or equal to 51 km/h (30 mph), the HPT will display a warning message (SLOW DOWN) with an audible alert. Move GSL closer to NEUTRAL to reduce speed.**

With header removed, steering control is reduced if weight is not added to drive wheels. If you must drive the windrower without header or MacDon weight system:

- **Do NOT exceed minimum speed setting.**
- **Avoid loose gravel and slopes.**
- **Do NOT tow a header.**
- **If control of machine is lost, immediately pull GSL to NEUTRAL.**

Driving on Road in Cab-Forward Mode

The M1240 Windrower is capable of being driven on the road in cab-forward mode, with or without a header attached, but at a reduced speed, under restricted conditions, and only for models sold in North America.

WARNING

Windrowers sold outside of North America: Do NOT drive windrower on the road in cab-forward mode, as lighting/ reflector visibility will not be compliant with road regulations.

WARNING

Collision between windrower and other vehicles may result in injury or death.

WARNING

When driving windrower on public roadways:

- **Obey all highway traffic regulations in your area. Use pilot vehicles in front and rear of windrower if required by law.**
- **Use slow-moving vehicle emblem and flashing warning lights unless prohibited by law.**
- **If width of attached header impedes other vehicle traffic, remove header and install a MacDon approved weight box.**

WARNING

Do NOT drive windrower on a road or highway at night or in conditions that reduce visibility, such as fog or rain. The width of the windrower may not be apparent under these conditions.

CAUTION

Check local laws for width regulations and lighting and marking requirements before transporting on roads.

Before driving windrower on a roadway:

1. Clean flashing amber lights, red tail lights, and head lights, and check that they work properly.
2. Clean all reflective surfaces and slow moving vehicle emblems.
3. Adjust interior rear view mirror and clean windows.
4. Ensure header engage switch (A) is off (down position).

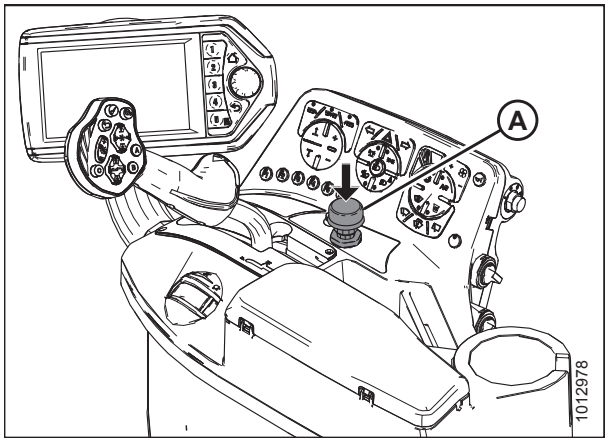

Figure 4.49: Header Engage Switch

CAUTION

Do NOT raise the header too high. Make sure you have good visibility out of the cab and that motorists are able to see the header lights.

5. Raise the header (if attached) enough to clear common obstacles, and then engage the header lift safety props.
6. If width of attached header impedes other vehicle traffic, remove header and install a MacDon approved weight box. For instructions, refer to *Preparing Windrower to Tow a Header, page 139*.
7. Press switch (A) to turn on lights. Always use these lights on roads to provide warning to other vehicles.
8. Use high/low switch (B) as required when other vehicles are approaching.

   IMPORTANT:

   Do **NOT** use field lights on the road; they may confuse other drivers.
9. Press switch (C) to turn on beacons.
10. Press switch (D) to turn on hazard lights.

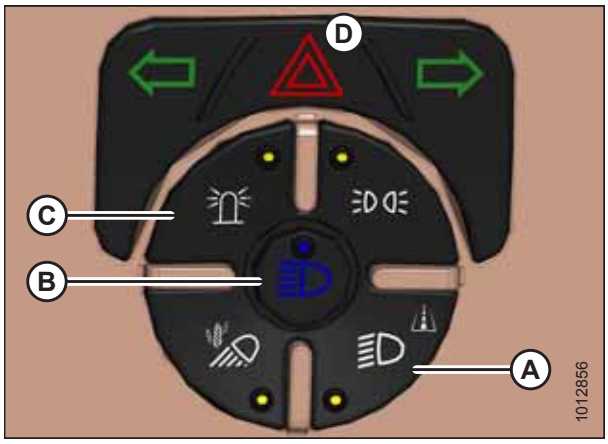

Figure 4.50: Light Switches

11. Set the desired maximum ground speed limit. For instructions, refer to *Adjusting Ground Speed Limit, page 124*.

    NOTE:

    Maximum ground speed can be set while the windrower is moving. Anticipate acceleration or deceleration if changing maximum speed while moving.

12. Slowly push throttle (A) to full forward (operating speed).

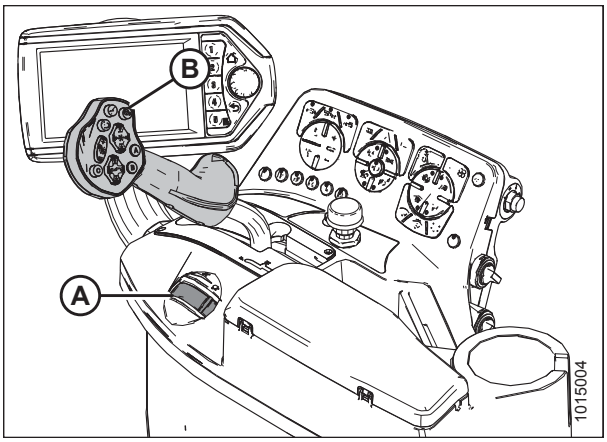

Figure 4.51: Console

CAUTION

Check to be sure all bystanders have cleared the area.

13. Move the GSL (B) out of PARK and slowly forward to desired speed.

WARNING

To avoid serious injury or death from loss of control:

- **Do NOT make abrupt changes in steering direction.**
- **Anticipate turns and steep slopes by slowing down well in advance. Before making an abrupt turn, pull back on the ground speed lever (GSL) as steering is more responsive at reduced speeds.**
- **Do NOT rapidly accelerate or decelerate while turning.**

When traveling on steep slopes:

- **Move GSL closer to NEUTRAL to reduce speed.**
- **Lower header.**
- **If the ground speed is greater than or equal to 51 km/h (30 mph), the HPT will display a warning message (SLOW DOWN) with an audible alert. Move GSL closer to NEUTRAL to reduce speed.**

With header removed, steering control is reduced if weight is not added to drive wheels. If you must drive the windrower without header or MacDon weight system:

- **Do NOT exceed minimum speed setting.**
- **Avoid loose gravel and slopes.**
- **Do NOT tow a header.**
- **If control of machine is lost, immediately pull ground speed lever (GSL) to NEUTRAL.**

Towing Header with Windrower

The windrower can be used to tow a MacDon draper header that has the Slow Speed Transport option installed. Ensure the optional weight box is installed on the windrower to transfer weight to the lift arms. Refer to *Preparing Windrower to Tow a Header, page 139*.

WARNING

- **A windrower without a header or weight box must NOT be used to tow headers due to reduced traction and possible loss of control.**
- **For towed equipment without brakes, do NOT exceed 32 km/h (20 mph).**

CAUTION

- **To tow a header with an M1240 Windrower, the header must be equipped with the appropriate equipment to comply with local regulations.**
- **Before towing, verify signal lighting and safety equipment is installed and functioning properly.**



Figure 4.52: Towing a Header

- **Do NOT exceed the combined gross vehicle weight (CGVW) specified in Table *4.2, page 138*.**
- **To prevent damage and/or loss of control, ensure the machine and attached equipment are within the following weight limits:**

Table 4.2 Maximum Weight

		kg	lb.
Maximum GVW (includes mounted implements)		10,660	23,500
Maximum CGVW (includes towed and mounted implements)		11,793	26,000
Weight (A) on both drive wheels	**Maximum**	8618	19,000
	Minimum	4568	10,070
Maximum weight (B) on both caster tires		2744	6050

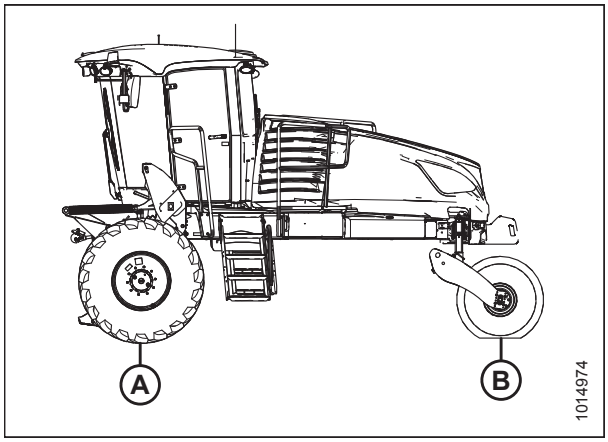

Figure 4.53: Maximum Weight

Preparing Windrower to Tow a Header

1. Attach header to windrower. Refer to *Attaching a D1X or D1XL Series Draper Header, page 155*.



Figure 4.54: Windrower with Header

2. Convert header to transport mode. Refer to header operator's manual.
3. Detach header from windrower. Refer to *Detaching a D1X or D1XL Series Draper Header, page 162*.
4. Remove hairpin (D) and clevis pin (C) securing header support (B) to leg (A). Retain pins for attaching weight box.
5. Remove header support (B) from windrower lift leg (A).
6. Repeat above step for opposite support.

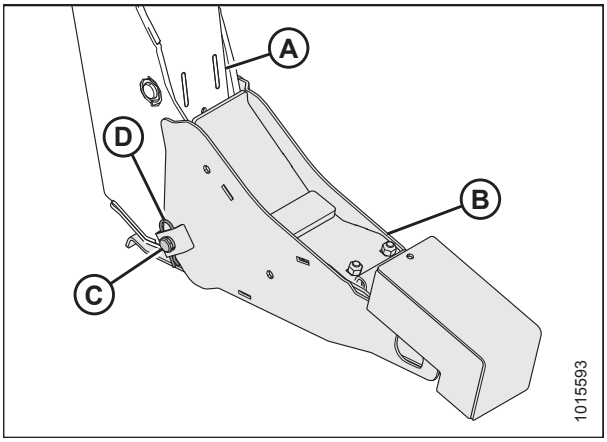

Figure 4.55: Draper Header Support

7. Drive windrower so that lift legs (A) are positioned into the weight box (B) pockets. Raise lift legs slightly.
8. Stop the engine and remove the key.
9. Install locking pin (C) into pocket and secure with hairpin (D). Repeat for opposite leg.

   NOTE:

   Pins were previously removed from the header supports.

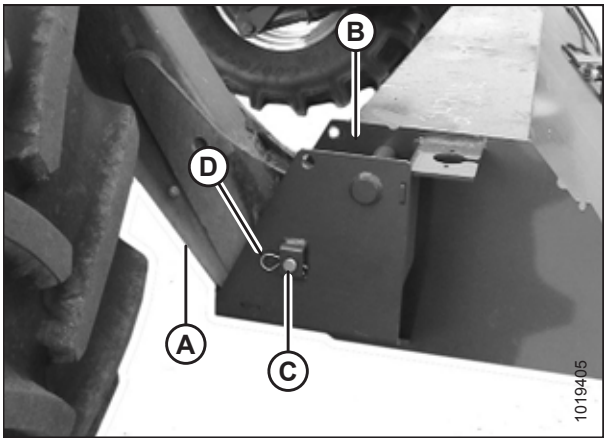

Figure 4.56: Windrower Lift Linkage

10. Attach slow speed transport hitch (A) to the weight box tongue (B) with drawbar pin, and secure with lynch pin. Attach safety chain (C).
11. Connect hitch harness to electrical socket at front of weight box.

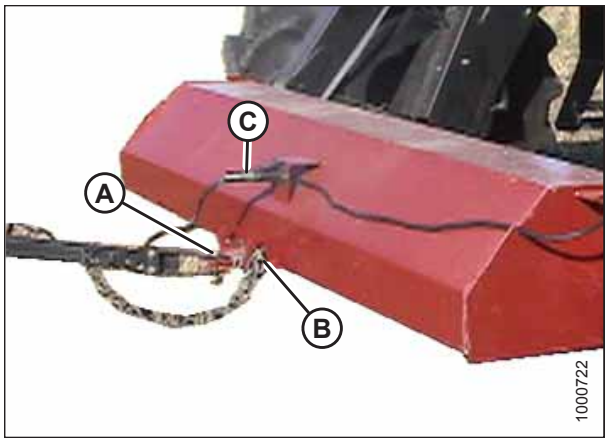

Figure 4.57: Weight Box

12. Start engine and raise weight box until tow bar is level. Transport the header. Refer to *Towing Header with Windrower, page 138*.



Figure 4.58: Towing a Header

Towing the Windrower – Emergency

Towing the windrower is **NOT** recommended. If the windrower gets stuck, or must be towed onto a truck or trailer, follow these steps:

IMPORTANT:

- **NEVER** attempt to start the windrower by towing it. Serious damage to the final drives may occur.
- Failure to disengage final drives before towing will result in serious transmission damage.
- Only tow the windrower for a short distance, on level ground, and at slow speed.

DANGER

Uncontrolled heavy equipment. With final drives disengaged (turned inward), brakes and steering do NOT work. After towing, place blocks under front and rear wheels to prevent uncontrolled movement.

1. Before towing the vehicle, disengage the final drives. For instructions, refer to *Engaging and Disengaging Final Drives, page 141*.
2. Use attachment point (A) to tow if windrower gets stuck, or when pulling onto a truck or trailer for transport.
3. When towing is complete, place blocks under front and rear wheels to prevent uncontrolled movement.
4. Engage final drives. For instructions, refer to *Engaging and Disengaging Final Drives, page 141*.

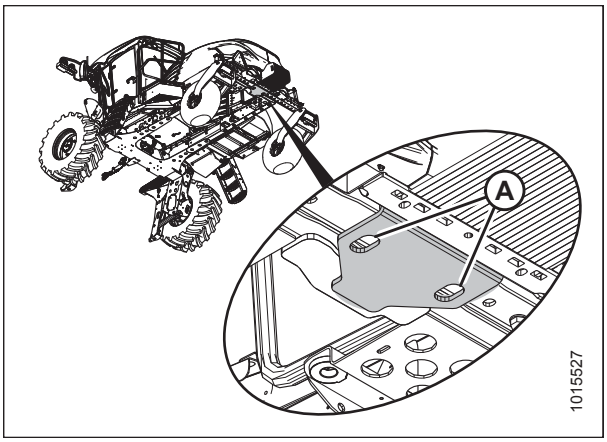

Figure 4.59: Emergency Towing

Engaging and Disengaging Final Drives

Disengage and engage final drives as follows:

WARNING

Park on a flat, level surface, and chock wheels to prevent unexpected rolling when disengaging final drive.

1. Remove the two bolts (A) at the center of drive wheel.
2. Remove cap (B) and flip over so that dished side faces in. The cap presses a pin that disengages the gearbox.
3. Reinstall bolts (A) to secure cap (B).
4. Repeat for the other drive wheel.
5. After towing, reverse cap (B) to engage final drives. Be sure plunger at center of wheel pops out to engage drive.

   NOTE:

   Engaging the final drives may require rocking the wheels slightly.

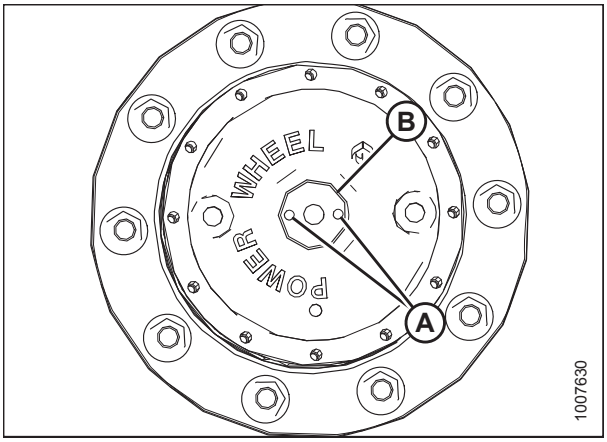

Figure 4.60: Final Drives

4.3.8 Storing the Windrower

Follow these steps to prepare your windrower for storage at the end of the season:

WARNING

NEVER use gasoline, naphtha, or any volatile material for cleaning purposes. These materials are toxic and can be flammable.

CAUTION

NEVER operate engine in a enclosed building. Proper ventilation is required to avoid exhaust gas hazards.

CAUTION

When working with batteries, remove metal jewelry and NEVER allow a metal object (such as a wrench) to touch across the battery terminals. A short circuit can produce an extremely hot spark causing severe injuries.

1. Check for broken components and order replacements from your Dealer. Attending to these items right away will save time and effort at beginning of next season.
2. Tighten loose hardware and replace any missing hardware. Refer to *8.1 Torque Specifications, page 405*.
3. Clean the windrower thoroughly.
4. Repaint all worn or chipped painted surfaces to prevent rust.
5. Fill the fuel tank to prevent condensation.
6. Drain the diesel exhaust fluid (DEF) tank when storing for **SIX MONTHS OR LONGER**. For instructions, refer to *5.14.3 Draining the Diesel Exhaust Fluid Tank, page 350*.
7. Change the oil at the end of the season to remove acids and other by-products of combustion from the engine.
8. Test engine coolant antifreeze concentration to ensure it is sufficient to protect engine against lowest expected temperature.
9. Drain the windshield washer or ensure fluid can endure the lowest expected temperatures.
10. Lubricate the windrower thoroughly, leaving excess grease on fittings to keep moisture out of bearings. Apply grease to exposed threads and sliding surfaces of components.
11. Remove the batteries (for instructions, refer to *Removing a Battery, page 338*), bring to full charge, and store in a cool, dry place not subject to freezing.
12. If possible, block up windrower to take weight off tires. If this is not possible, increase tire pressure by 25% for storage. Adjust to recommended operating pressure before next use.

    IMPORTANT:

    Do **NOT** exceed the maximum pressure specified on the tire sidewall.
13. Store the windrower in a dry, protected place.
14. If stored outside, seal the air cleaner intake and exhaust pipe with plastic bags and/or waterproof tape.
15. If stored outside, cover the windrower with a breathable cover. Avoid plastic covers that can trap humidity.

4.4 Attaching and Detaching Headers

4.4.1 A40DX Auger Header

Attaching an A40DX Auger Header

CAUTION

To avoid bodily injury or death from unexpected startup of machine, always stop engine and remove key from ignition before leaving operator's seat for any reason.

1. Remove hairpin (A) from pin (B), and remove pin from header supports (C) on both sides of header.

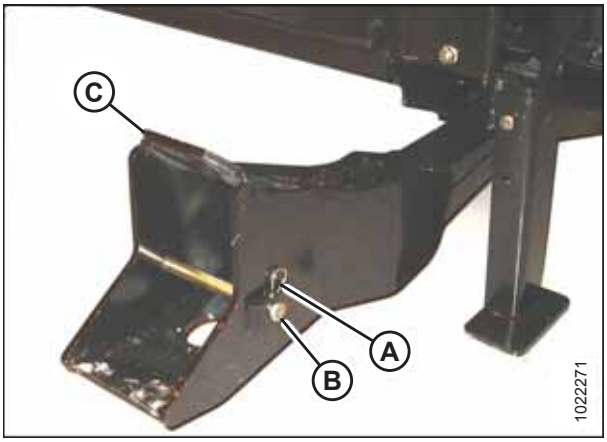

Figure 4.61: Header Support

CAUTION

Check to be sure all bystanders have cleared the area.

2. Start engine.

CAUTION

When lowering header lift legs without a header or weight box attached to the windrower, ensure the float springs tension is fully released to prevent damage to the header lift linkages.

NOTE:

If not prompted by the Harvest Performance Tracker (HPT) display to remove float, remove float manually by doing the following:

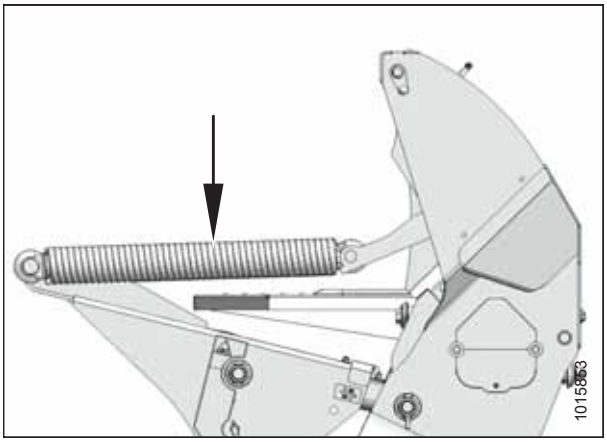

Figure 4.62: Header Float Springs

3. Press HPT scroll knob (A) to highlight QuickMenu options.
4. Rotate HPT scroll knob (A) to highlight the HEADER FLOAT symbol (B) and press the scroll knob to select.

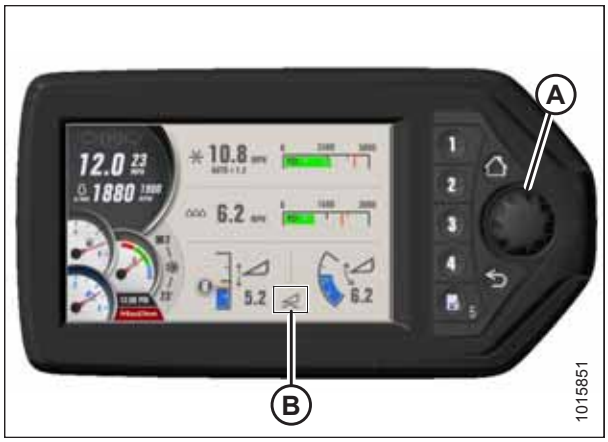

Figure 4.63: HPT Display

5. On FLOAT ADJUST PAGE, press soft key 3 (A) to remove float.



Figure 4.64: HPT Display

6. Press the HEADER DOWN switch (A) on the ground speed lever (GSL) to fully retract header lift cylinders.
7. For hydraulic center-link with self-alignment, press the REEL UP switch (B) on the GSL to raise the center-link until the hook is above the attachment pin on the header.

   IMPORTANT:

   If the center-link is too low, it may contact the header as the windrower approaches the header for hookup.

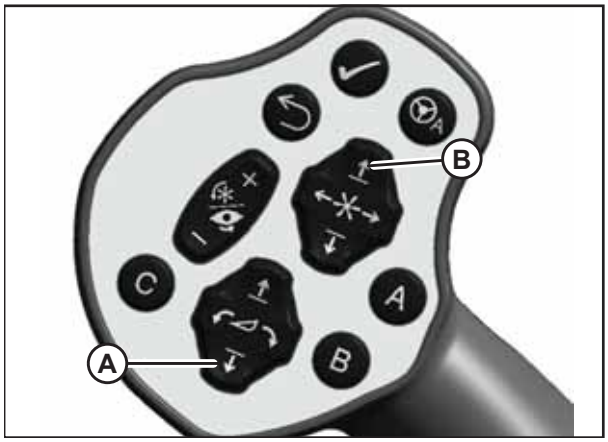

Figure 4.65: GSL

8. For hydraulic center-link without self-alignment, relocate pin (A) in frame linkage as required to raise the center-link (B) until the hook is above the attachment pin on the header.

   IMPORTANT:

   If the center-link is too low, it may contact the header as the windrower approaches the header for hookup.

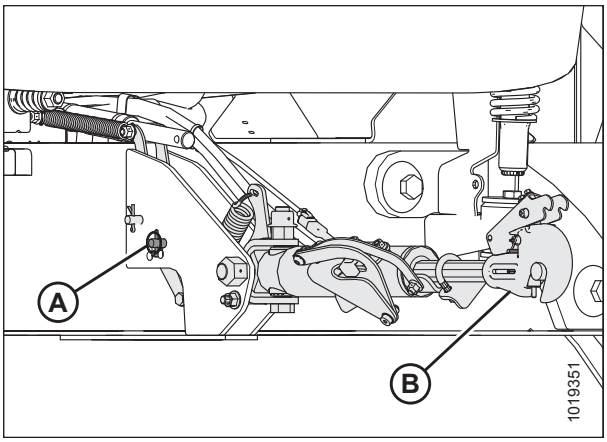

Figure 4.66: Hydraulic Center-Link without Self-Alignment Kit

9. Drive the windrower slowly forward so the feet (A) on the windrower enter the supports (B) on the header. Continue to drive slowly forward until the feet engage the supports, and the header nudges forward.

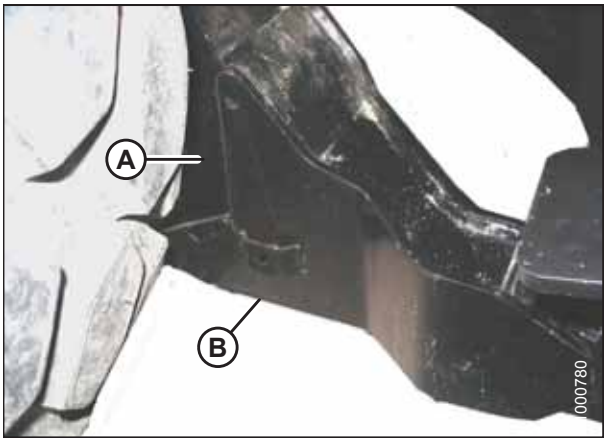

Figure 4.67: Header Support

10. For hydraulic center-link with self-alignment, adjust position of the center-link cylinder (A) with switches on the GSL until the hook (B) is above the header attachment pin.
11. For hydraulic center-link without self-alignment, push down on rod end of link cylinder (C) until hook engages and locks onto header pin.

    IMPORTANT:

    Hook release (D) must be down to enable self-locking mechanism. If the release is open (up), manually push it down after hook engages header pin.

12. For hydraulic center-link with self-alignment, lower center-link (A) onto the header with REEL DOWN switch on the GSL until it locks into position (hook release [D] is down).
13. For hydraulic center-link with self-alignment, check that center-link is locked onto header by pressing the REEL UP switch on the GSL.

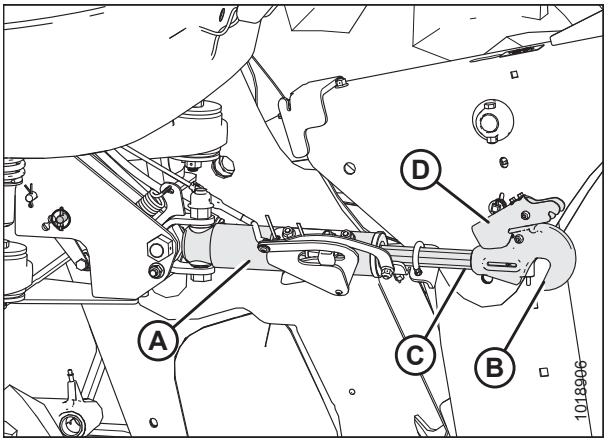

Figure 4.68: Hydraulic Center-Link

CAUTION

Check to be sure all bystanders have cleared the area.

14. Press the HEADER UP switch (A) to raise header to maximum height.
15. If one end of the header does **NOT** fully raise, rephase the lift cylinders as follows:
    a. Press and hold the HEADER UP switch (A) until both cylinders stop moving.
    b. Continue to hold the switch for 3–4 seconds. Cylinders are now phased.

    NOTE:

    This procedure may have to be repeated if there is air in the system.
16. Stop the engine and remove the key.
17. Engage safety prop on the windrower's lift cylinder as follows:
    a. Pull lever (A) and rotate toward header to release, and lower safety prop onto cylinder.
    b. Repeat for opposite lift cylinder.

    IMPORTANT:

    Ensure the safety props engage over the cylinder piston rods. If a safety prop does not engage properly, raise the header until the prop fits over the rod.



Figure 4.69: GSL

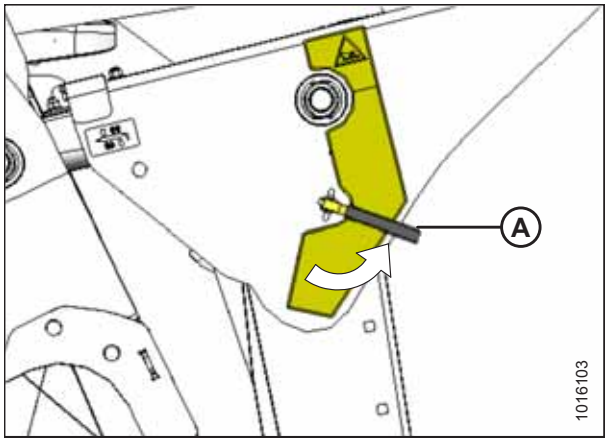

Figure 4.70: Cylinder Safety Prop

18. Install clevis pin (A) through support and foot, and secure with hairpin. Repeat for opposite support.

    IMPORTANT:

    Ensure clevis pin (A) is fully inserted and hairpin is installed behind bracket.

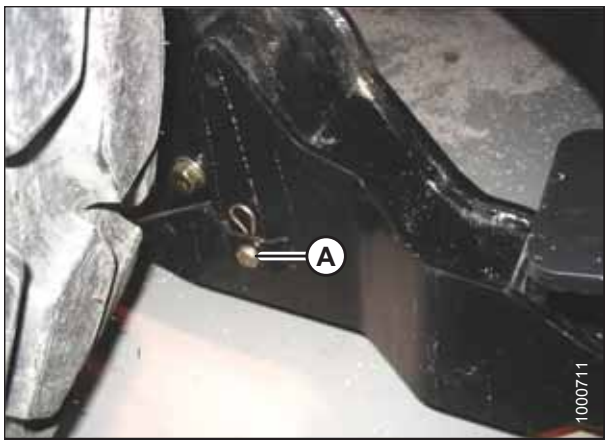

Figure 4.71: Header Support

19. Remove lynch pin from clevis pin (A) in stand (B).
20. Hold stand (B) and remove pin (A).
21. Move stand to storage position by inverting and relocating onto bracket as shown. Reinsert clevis pin (A) and secure with lynch pin.

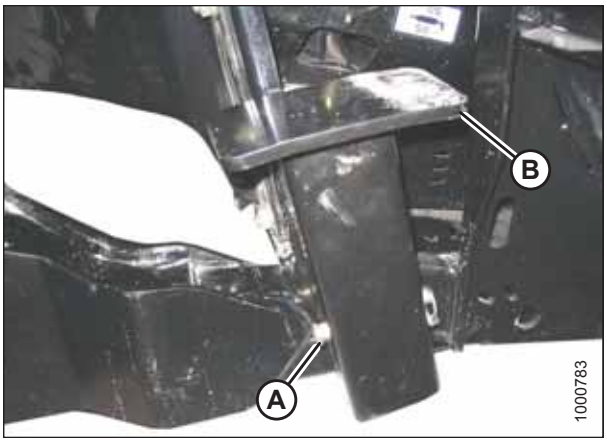

Figure 4.72: Header Stand

22. Disengage safety prop by turning lever (A) downward to raise prop until lever locks into vertical position.
23. Repeat for opposite side.

CAUTION

Check to be sure all bystanders have cleared the area.

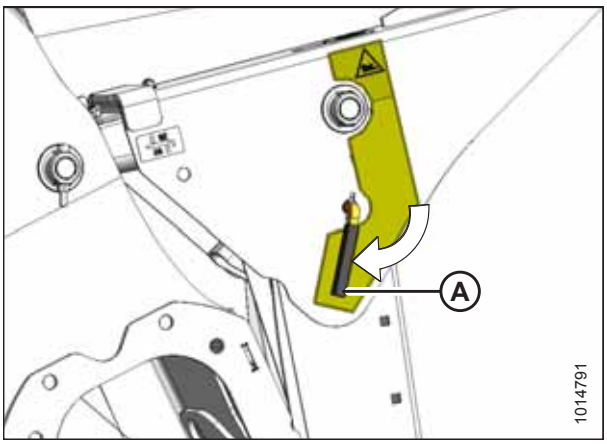

Figure 4.73: Cylinder Safety Prop

24. Start engine and press HEADER DOWN switch (A) on GSL to fully lower header.

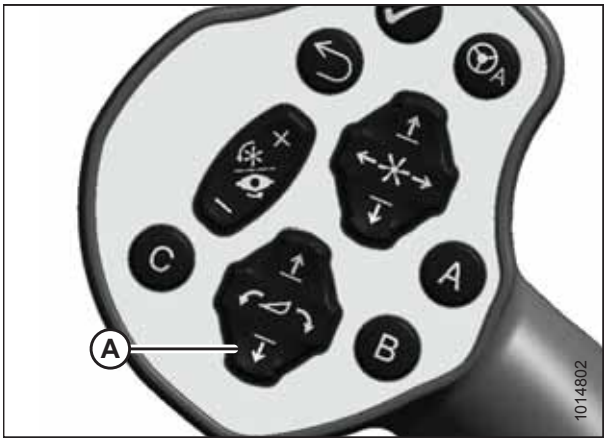

Figure 4.74: GSL

25. Press rotary scroll knob (A) on HPT to highlight QuickMenu options.
26. Rotate scroll knob (A) to highlight the HEADER FLOAT symbol (B). Press scroll knob to select.

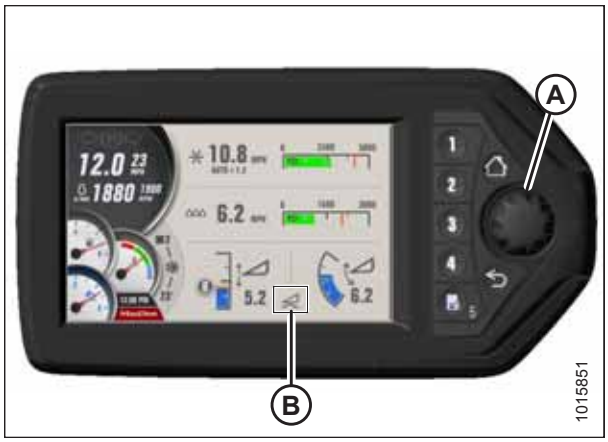

Figure 4.75: HPT Display

27. Turn scroll knob (A) to highlight left (B) or right (C) float and press knob (A) to activate selection.
28. Rotate scroll knob (A) to adjust float setting and press knob when finished.

    IMPORTANT:

    Float adjustments of 1.0 (out of 10) change the header weight at the cutterbar by approximately 91 kg (200 lb.). Adjust float in increments of 0.05 to optimize field performance.
29. Stop the engine and remove the key.
30. Grasp one end of the auger header and lift. Lifting force should be 335–380 N (75–85 lbf) and should be the same at both ends.
31. Proceed to *Connecting A40DX Hydraulics, page 149*.



Figure 4.76: HPT Display

Connecting A40DX Hydraulics

CAUTION

Do NOT stand on an unlocked platform. It is unstable and may cause you to fall.

1. Approach platform/stair unit (A) on left cab-forward side of windrower and ensure cab door is closed.
2. Push latch (B), and pull platform (A) toward walking beam until it stops and latch engages.

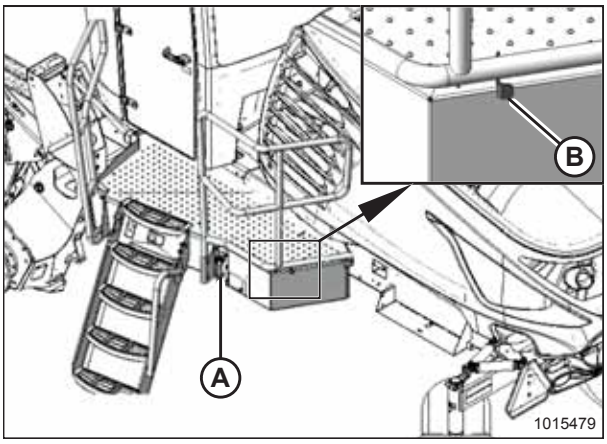

Figure 4.77: Left Cab-Forward Platform

3. Retrieve hydraulic multicouplers (A) and electrical harness (B) from the header.
4. Route hose/harness bundle toward the windrower through support (C).

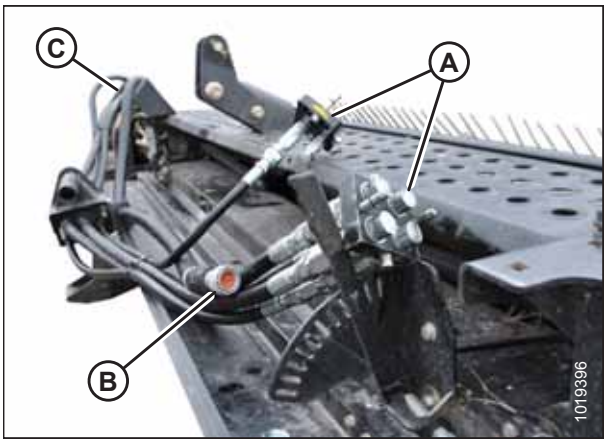

Figure 4.78: Hydraulic Hoses in Storage Position

5. Insert hose support (B) into hole (A) in the windrower left leg, and route the header hose bundle (C) under the windrower to the hydraulic and electrical couplers.

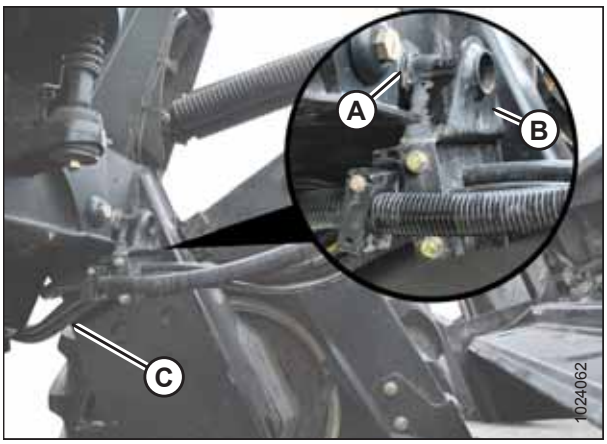

Figure 4.79: Multicoupler

6. Clean multicouplers and receptacles to prevent contamination.
7. Push button (A) on rear multicoupler receptacle and rotate handle (B) away from windrower.
8. Open cover (C) and position multicoupler (D) onto receptacle. Align pins in coupler with slots in handle (B), and rotate handle toward windrower so that coupler is locked onto receptacle and button (A) snaps out.
9. Push button (E) on front multicoupler receptacle and rotate handle (F) away from windrower.
10. Open cover (G) and position multicoupler (H) onto receptacle. Align pins in coupler with slots in handle, and rotate handle toward windrower so that coupler is locked onto receptacle and button (E) snaps out.
11. Remove cover from receptacle (A), and connect electrical harness from header.

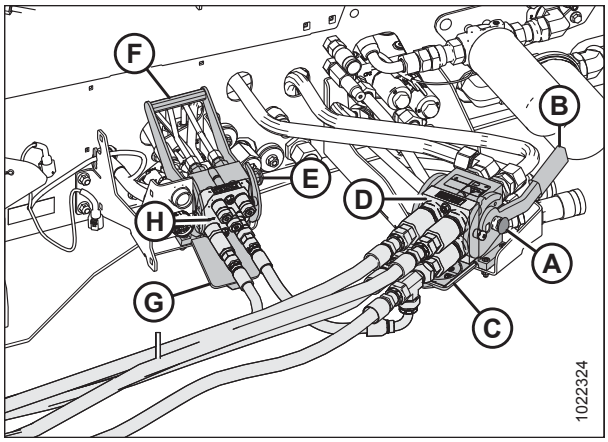

Figure 4.80: Knife/Reel/Auger Drive Multicoupler

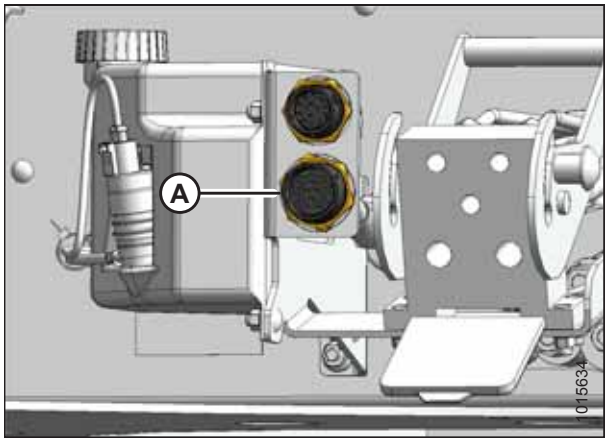

Figure 4.81: Electrical Connectors

Detaching an A40DX Auger Header

WARNING

To avoid bodily injury or death from unexpected startup of the machine, always stop the engine and remove the key from the ignition before leaving the operator's seat for any reason.

DANGER

To avoid bodily injury from fall of raised header, always engage safety props when working on or around raised header, and before going under header for any reason.

1. Start engine and press HEADER UP button (A) on ground speed lever (GSL) to raise header to maximum height.
2. If one end of the header does **NOT** raise fully, rephase the cylinders as follows:
   a. Press and hold the HEADER UP (A) switch until both cylinders stop moving.
   b. Continue to hold the switch for 3–4 seconds. Cylinders are now phased.
3. Stop the engine and remove the key.



Figure 4.82: GSL

4. Engage safety prop on the windrower's lift cylinder as follows:
   a. Pull lever (A) and rotate toward header to release, and lower safety prop onto cylinder.
   b. Repeat for opposite lift cylinder.

   IMPORTANT:

   Ensure the safety props engage over the cylinder piston rods. If a safety prop does not engage properly, raise the header until the prop fits over the rod.

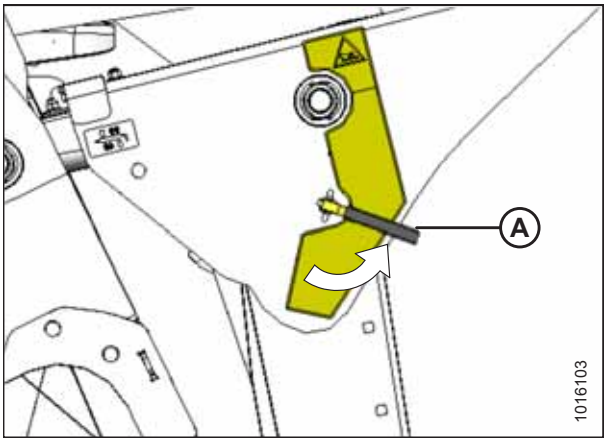

Figure 4.83: Cylinder Safety Prop

5. Remove hairpin from the clevis pin (A) and remove clevis pin from header support (B) on both sides.

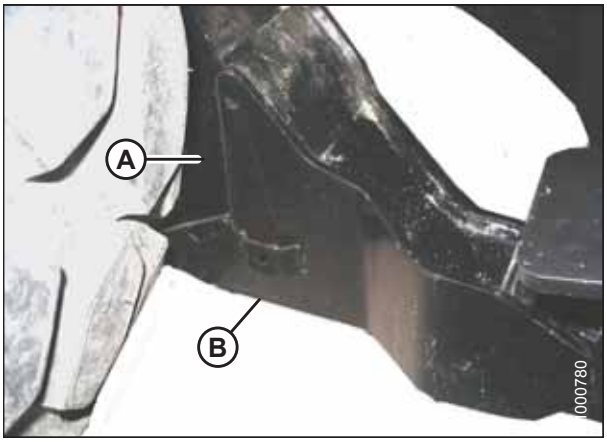

Figure 4.84: Header Support

6. Lower stand (A) by pulling clevis pin (B), inverting stand, and relocating on bracket. Reinsert pin (B) and secure with hairpin.

CAUTION

Check to be sure all bystanders have cleared the area.

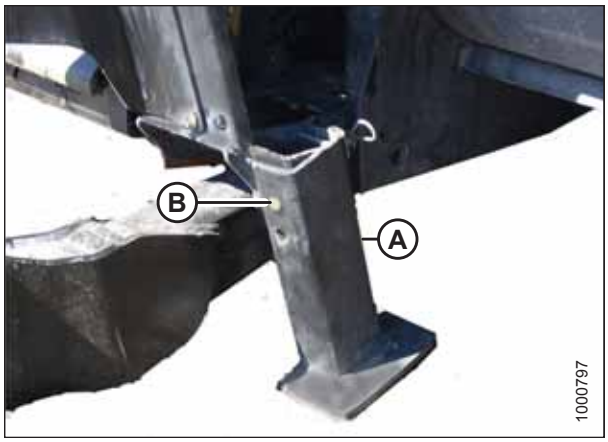

Figure 4.85: Header Stand

7. Disengage safety props by turning lever (A) away from header to raise safety prop until lever locks into vertical position. Repeat for opposite cylinder.
8. Start engine, choose a level area, and lower header to the ground.

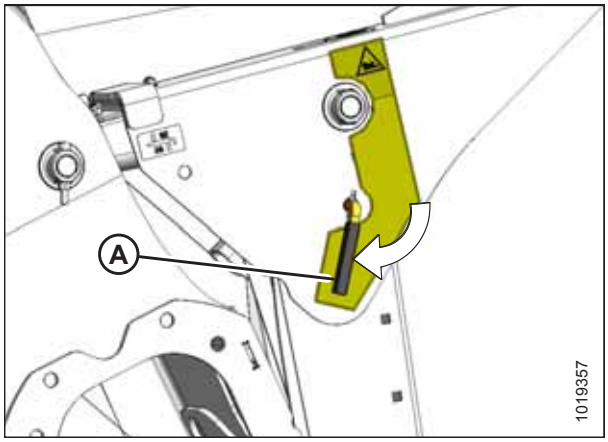

Figure 4.86: Safety Props

9. Activate HEADER TILT UP (A) and HEADER TILT DOWN (B) cylinder switches on GSL to release the load on center-link cylinder.

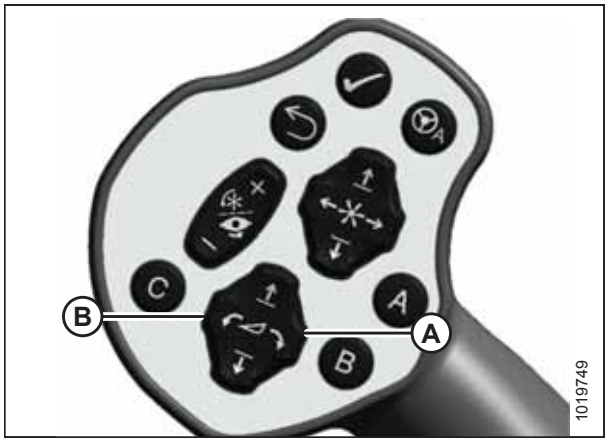

Figure 4.87: GSL

10. Stop the engine and remove the key.
11. Lift hook release (A) and lift hook (B) off header pin.

    NOTE:

    If optional center-link self-alignment kit is installed, lift release (A) and then operate the link lift cylinder with the REEL UP switch on the GSL to disengage the center-link from the header.

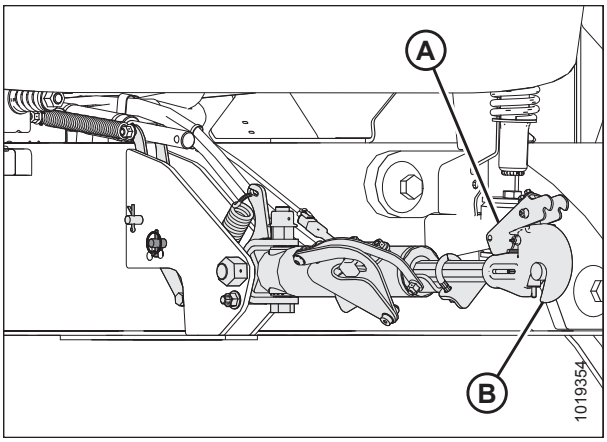

Figure 4.88: Hydraulic Center-Link

12. Disconnect header drive hydraulics (A) and electrical harness (B) from the windrower.

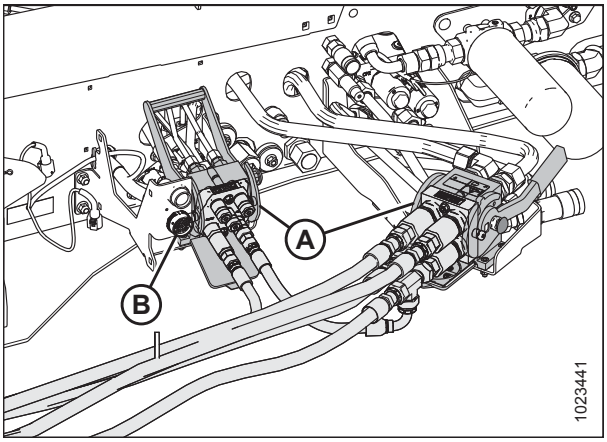

Figure 4.89: Header Drive Hydraulics

13. Place the hydraulics/electrical bundle (A) in storage position on the header.
14. Back windrower slowly away from header.

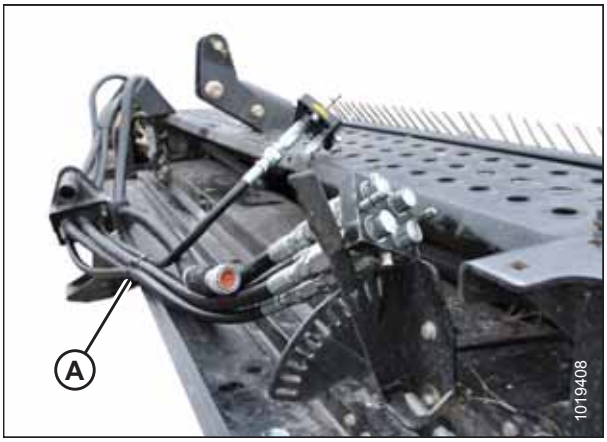

Figure 4.90: Hydraulics Hoses in Storage Position

15. Reinstall clevis pin (B) into header support (C) and secure with hairpin (A). Repeat for opposite side.

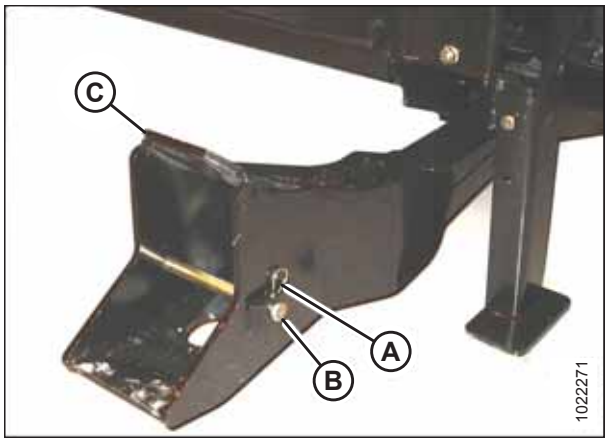

Figure 4.91: Header Support

4.4.2 D1X or D1XL Series Draper Header

Attaching Draper Header Supports

Draper header supports are required to attach a D1X or D1XL Series Draper Header to the windrower.

WARNING

To avoid bodily injury or death from unexpected startup of the machine, always stop the engine and remove the key from the ignition before leaving the operator's seat for any reason.

If **NOT** installed, attach draper header support (supplied with header) to windrower lift linkage as follows:

1. Remove hairpin and clevis pin (B) from the draper header support (A).

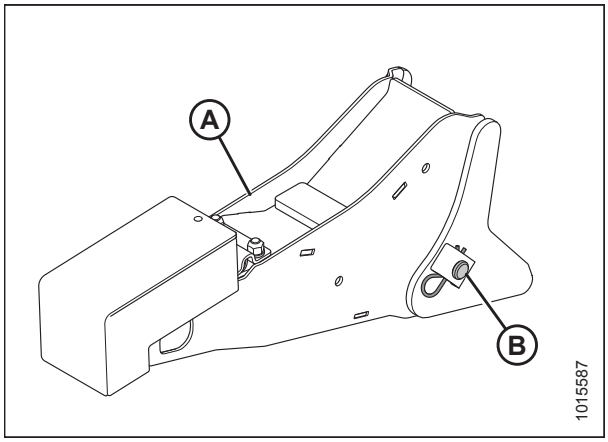

Figure 4.92: Draper Header Support

2. Position the draper header support (B) on lift linkage (A), and reinstall clevis pin (C).

   NOTE:

   To avoid pin snagging the windrow, install the clevis pin on the outboard side of the draper header support.

3. Secure clevis pin (C) with hairpin (D).

4. Repeat for opposite lift linkage.

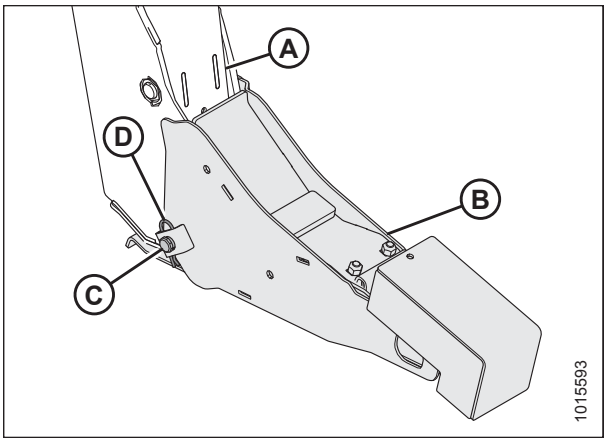

Figure 4.93: Draper Header Support

Attaching a D1X or D1XL Series Draper Header

NOTE:

Draper header supports must be installed onto the windrower lift linkage before starting this procedure. Refer to *Attaching Draper Header Supports, page 154*.

WARNING

To avoid bodily injury or death from unexpected startup of the machine, always stop the engine and remove the key from the ignition before leaving the operator's seat for any reason.

1. **Hydraulic Center-Link without Self-Alignment:** Relocate pin (A) in frame linkage as required to raise the center-link (B) until the hook is above the attachment pin on the header.

   IMPORTANT:

   If the center-link is too low, it may contact the header as the windrower approaches the header for hookup.

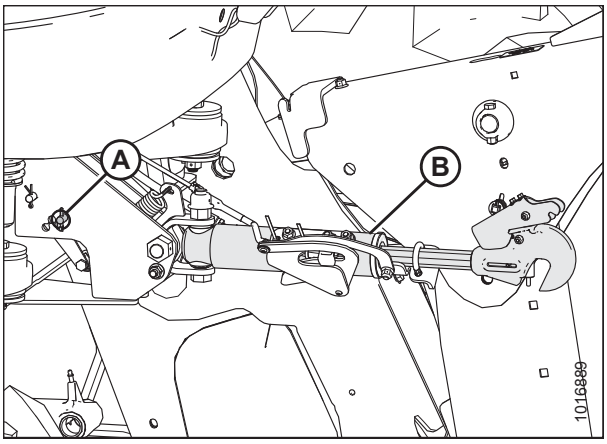

Figure 4.94: Center-Link without Self-Alignment

2. Remove hairpin (A) from pin (B), and remove pin (B) from header leg. Repeat on the opposite header leg.

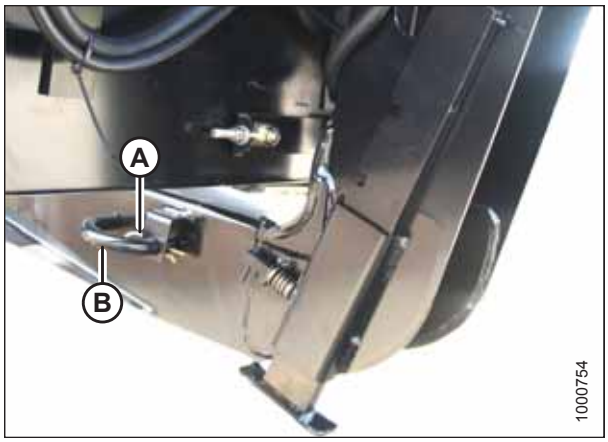

Figure 4.95: Header Leg

CAUTION

Check to be sure all bystanders have cleared the area.

3. Start engine.

CAUTION

When lowering header lift legs without a header or weight box attached to the windrower, ensure the float springs tension is fully released to prevent damage to the header lift linkages.

NOTE:

If not prompted by the Harvest Performance Tracker (HPT) display to remove float, remove float manually by doing the following:

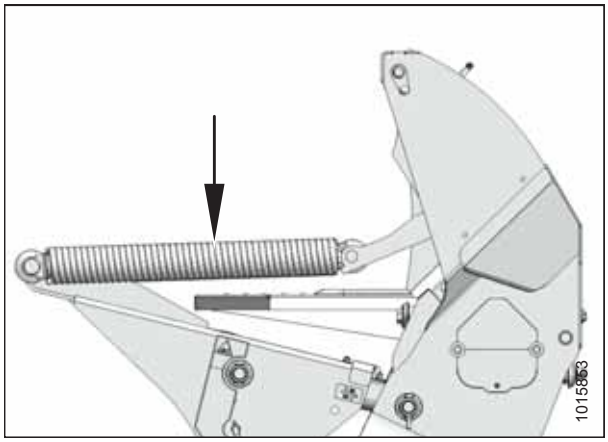

Figure 4.96: Header Float Springs

4. Press scroll knob (A) on HPT to display the QuickMenu system.
5. Rotate scroll knob (A) to highlight the HEADER FLOAT symbol (B), and press scroll knob to select.

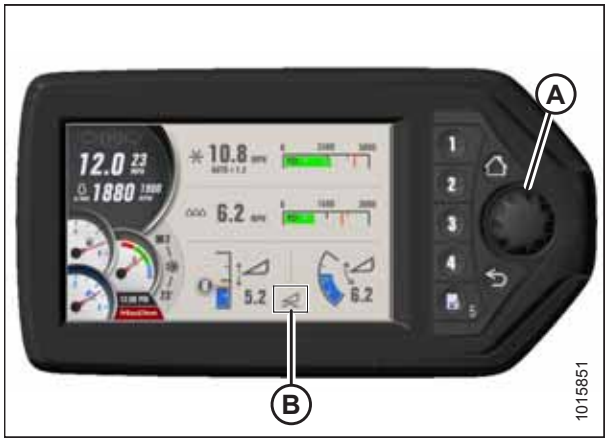

Figure 4.97: HPT Display

6. On FLOAT ADJUST page, press soft key 3 (A) to remove float.



Figure 4.98: HPT Display

7. **Self-Aligning Hydraulic Center-Link:**

   a. Press HEADER DOWN switch on the ground speed lever (GSL) to fully retract header lift cylinders.

   b. Press REEL UP switch on the GSL to raise the center-link until the hook is above the attachment pin on the header.

   IMPORTANT:

   If the center-link is too low, it may contact the header as the windrower approaches the header for hookup.

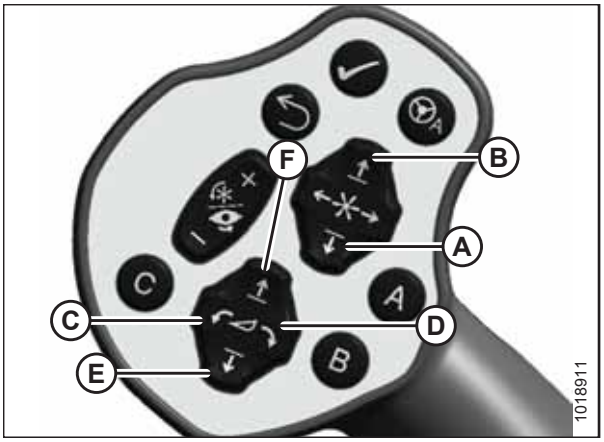

Figure 4.99: GSL Switches

A - Reel Down
B - Reel Up
C - Header Tilt Down
D - Header Tilt Up
E - Header Down
F - Header Up

8. Drive the windrower slowly forward until the draper header supports (A) enter the header legs (B). Continue driving slowly forward until lift linkages contact the support plates in the header legs and the header nudges forward.

9. Ensure that lift linkages are properly engaged in header legs and are contacting the support plates.

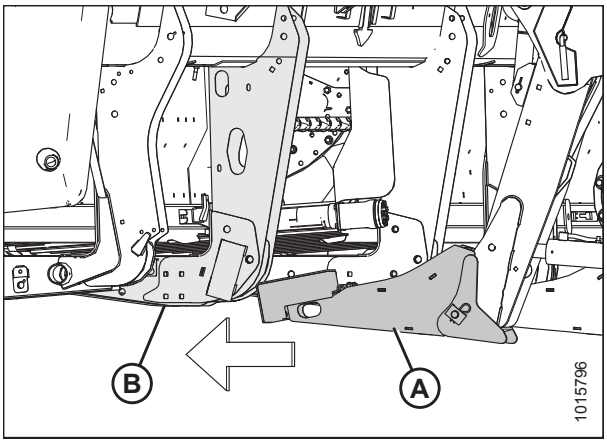

Figure 4.100: Header Leg and Draper Header Support

10. **Self-Aligning Hydraulic Center-Link:**

    a. Adjust position of the center-link cylinder (A) with the switches on the GSL until hook (B) is above the header attachment pin.

    IMPORTANT:

    Hook release (C) must be down to enable self-locking mechanism.

    b. If the hook release (C) is open (up), stop the engine and remove the ignition key. Manually push the hook release (C) down after the hook engages the header pin.

    c. Lower center-link (A) onto the header with REEL DOWN switch on the GSL until the center-link locks into position and the hook release (C) is down.

    d. Check that center-link is locked onto header by pressing the REEL UP switch on the GSL.

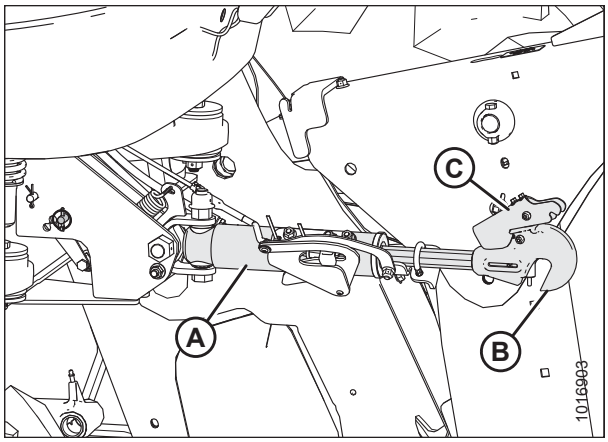

Figure 4.101: Hydraulic Center-Link

11. **Hydraulic Center-Link without Self-Alignment:**

    a. Press HEADER TILT UP or HEADER TILT DOWN cylinder switches on the GSL to extend or retract center-link cylinder until the hook is aligned with the header attachment pin.

    b. Stop the engine and remove the key.

    c. Push down on rod end of link cylinder (B) until hook engages and locks onto header pin.

    IMPORTANT:

    Hook release must be down to enable self-locking mechanism. If the hook release is open (up), manually push it down after hook engages pin.

    d. Check that center-link (A) is locked onto header by pulling upward on rod end (B) of cylinder.

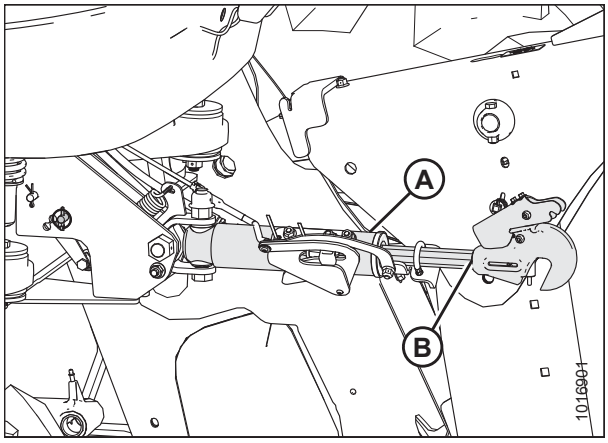

Figure 4.102: Hydraulic Center-Link

CAUTION

Check to be sure all bystanders have cleared the area.

e. Start engine.

12. Press the HEADER UP switch (A) to raise header to maximum height.

    NOTE:

    If one end of the header does **NOT** fully raise, rephase the lift cylinders as follows:

    a. Press and hold the HEADER UP switch (A) until both cylinders stop moving.

    b. Continue to hold the switch for 3–4 seconds. Cylinders are now phased.

13. Stop the engine and remove the key.



Figure 4.103: GSL

14. Engage safety prop on lift cylinder as follows:

    a. Pull lever (A) and rotate toward header to release, and lower safety prop onto cylinder.

    b. Repeat for opposite lift cylinder.

    IMPORTANT:

    Ensure the safety props engage over the cylinder piston rods. If safety prop does not engage properly, raise header until prop fits over the rod.

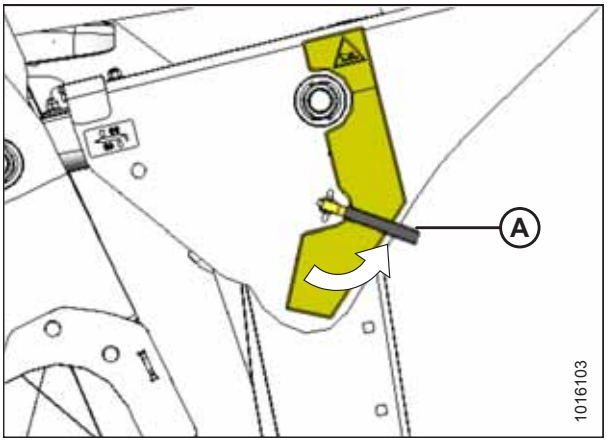

Figure 4.104: Cylinder Safety Prop

15. Install pin (B) through the header leg (engaging U-bracket in draper header support) on both sides and secure with a hairpin (A).

16. Raise header stand (D) to storage position by pulling spring pin (C) and lifting stand into uppermost position. Release spring pin.

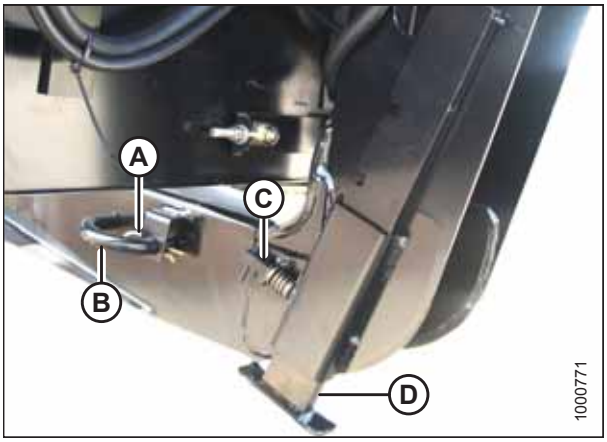

Figure 4.105: Header Leg

17. Disengage safety prop by turning lever (A) downward to raise safety prop until lever locks into vertical position.

    NOTE:

    If safety prop will not disengage, raise header slightly.

18. Repeat for opposite side.

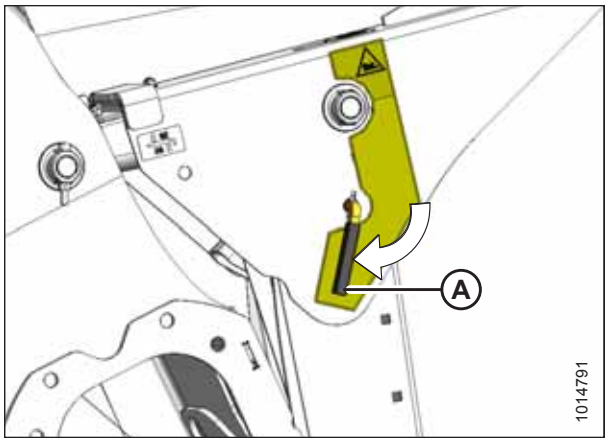

Figure 4.106: Cylinder Safety Prop

CAUTION

Check to be sure all bystanders have cleared the area.

19. Start engine and press HEADER DOWN switch (A) on GSL to fully lower header.

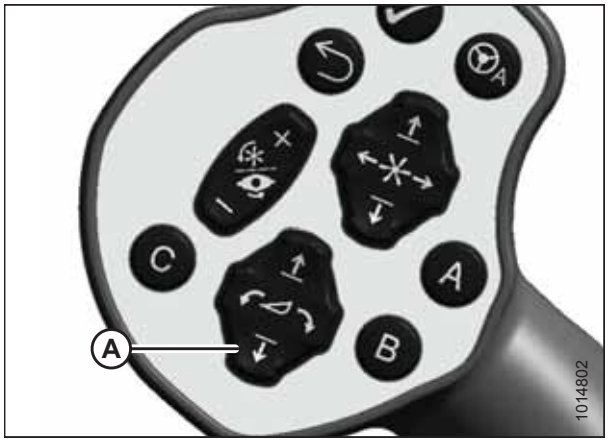

Figure 4.107: GSL

Connecting D1X or D1XL Series Hydraulics

IMPORTANT:

To prevent contamination of the hydraulic system, use a clean rag to remove dirt and moisture from all (fixed and movable) hydraulic couplers.

1. Push the link on latch (C) and pull handle (A) on hose management system (B) rearward to disengage arm from latch.
2. Move hose management system (B) toward the left cab-forward side of the windrower.

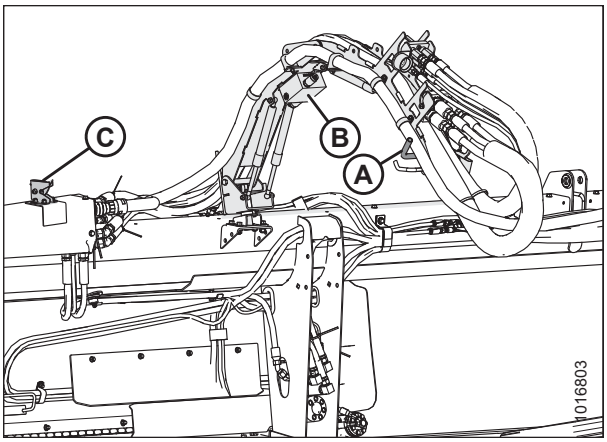

Figure 4.108: Hydraulic Hose Management System

3. Connect hydraulic hose management system (A) to the windrower by securing ball joint (B) into latch support (C) on the windrower leg.
4. Open the left cab-forward side platform. For instructions, refer to *5.4.1 Opening Platform, page 270*.

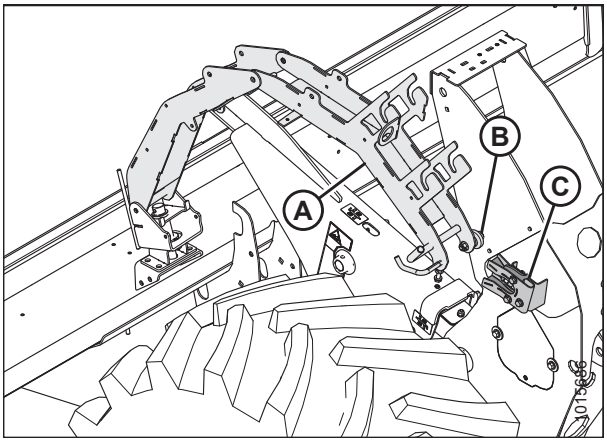

Figure 4.109: Hydraulic Hose Management System

5. Retrieve draper drive and reel control multicoupler (A) from the hose management system.
6. Push knob (B) on hydraulic receptacle and pull handle (C) fully away from windrower.
7. Open cover (D) and position coupler onto receptacle. Align pins in coupler with slots in handle (C) and push handle toward windrower so that coupler locks onto receptacle and knob (B) snaps out.
8. Remove hose quick-disconnect (F) from storage location and connect to receptacle on frame.

   NOTE:

   Hose quick-disconnect (F) is only present on M1240 machines configured for draper headers, and on M1170 machines with the R1 Series Hydraulic Drive kit (MD #B6621) installed.
9. Remove the cover from electrical connector (E), push the electrical connector onto the receptacle, and secure it by turning the collar on the electrical connector clockwise.

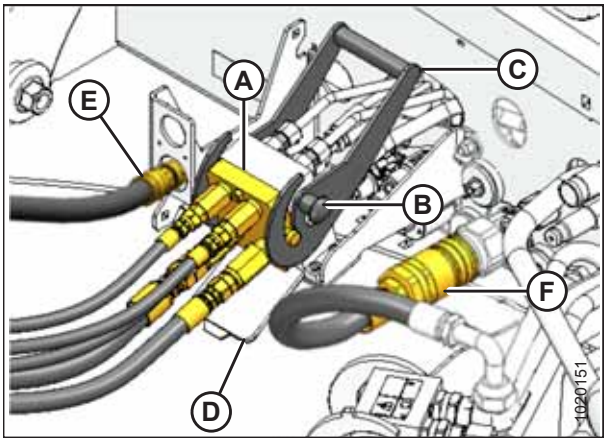

Figure 4.110: Draper/Reel Multicoupler

10. Retrieve knife and reel drive multicoupler (A) from the hose management system.
11. Push knob (B) on the hydraulic receptacle and pull handle (C) fully away from the windrower.
12. Open cover (D) and position the coupler onto the receptacle. Align the pins in the coupler with the slots in handle (C), and push the handle toward the windrower so that the coupler locks onto the receptacle and knob (B) snaps out.
13. Close the platform. For instructions, refer to *5.4.2 Closing Platform, page 270*.

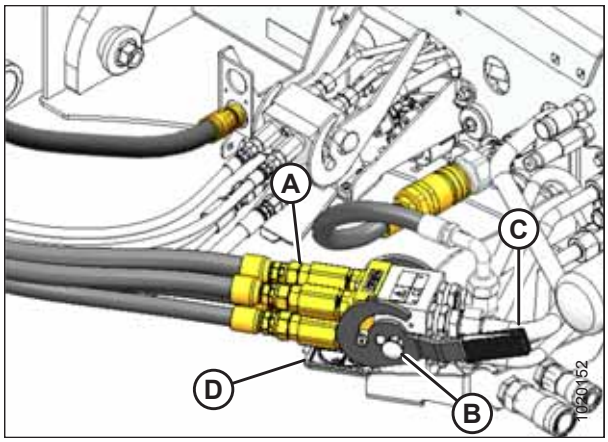

Figure 4.111: Knife/Reel Drive Multicoupler

14. Ensure hydraulic hose routing is as straight as possible and avoids potential rub/wear points.

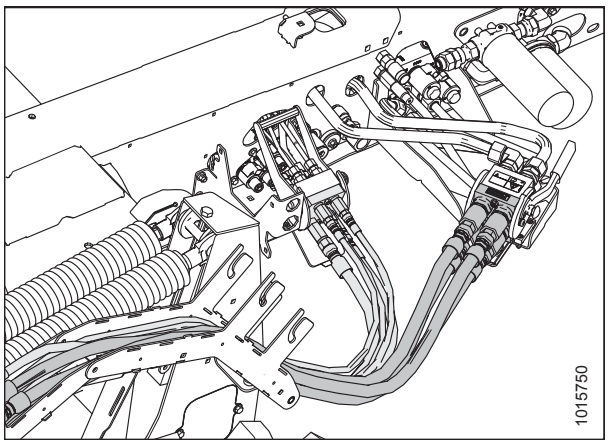

Figure 4.112: Hydraulic Multicouplers and Hose Routing

Detaching a D1X or D1XL Series Draper Header

WARNING

To avoid bodily injury or death from unexpected startup of the machine, always stop the engine and remove the key from the ignition before leaving the operator's seat for any reason.

1. Lower the reel fully.
2. Lift the header fully.
3. Stop the engine and remove the key from the ignition.

4. Engage safety prop on the windrower's lift cylinder as follows:

   a. Pull lever (A) and rotate toward header to release, and lower safety prop onto cylinder.

   b. Repeat for opposite lift cylinder.

   IMPORTANT:

   Ensure the safety props engage over the cylinder piston rods. If a safety prop does not engage properly, raise the header until the prop fits over the rod.

5. Open left-side platform. For instructions, refer to *5.4.1 Opening Platform, page 270*.

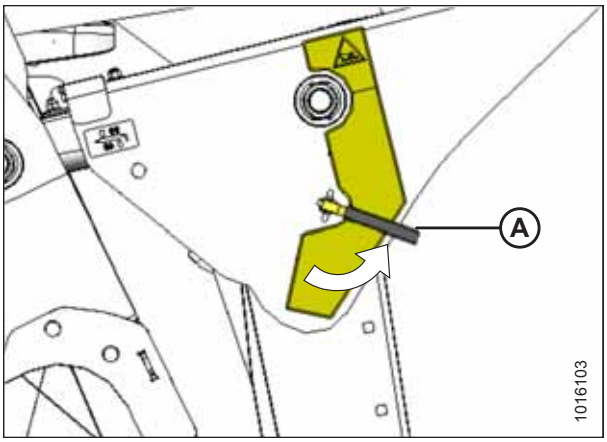

Figure 4.113: Cylinder Safety Prop

6. Push lock button (A) and pull handle (B) to disengage multicoupler (C). Disconnect the hydraulics from the rear knife/reel drive receptacle.

   NOTE:

   Firmly hold handle (B) when disconnecting the multicoupler (C). Pressure may cause the handle to kick back with force.

7. Route knife/reel drive hose bundle back to the storage position (D) on the hydraulic hose management arm.

8. Remove any debris that may have accumulated on the receptacle. Close the cover (E).

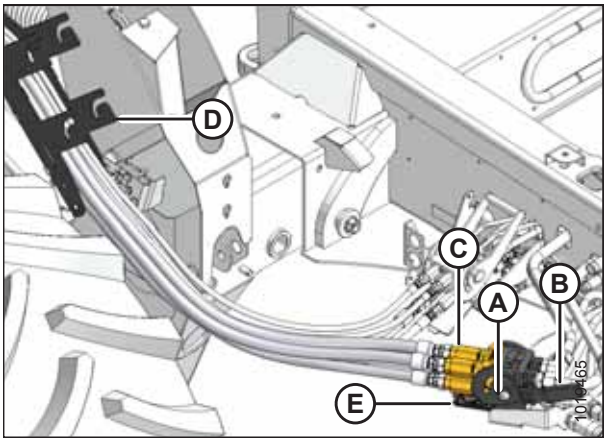

Figure 4.114: Knife/Reel Drive Multicoupler

9. Push lock button (B), and pull handle (C) to disengage multicoupler (A). Disconnect the hydraulics from the windrower draper drive/reel lift receptacle.

10. Disconnect electrical connector (E).

11. Remove any debris that may have accumulated on the windrower front receptacle, and close cover (D).

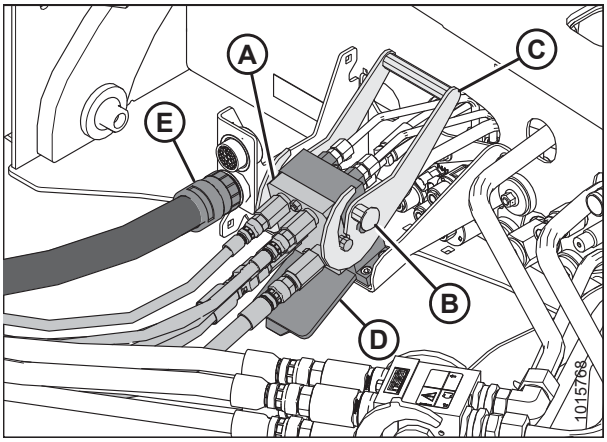

Figure 4.115: Draper/Reel Multicoupler

12. Route draper drive/reel hose bundle back to the storage position (A) on the hydraulic hose management arm (B).
13. Insert electrical connector into storage cup (C).
14. Close platform. For instructions, refer to *5.4.2 Closing Platform, page 270*.

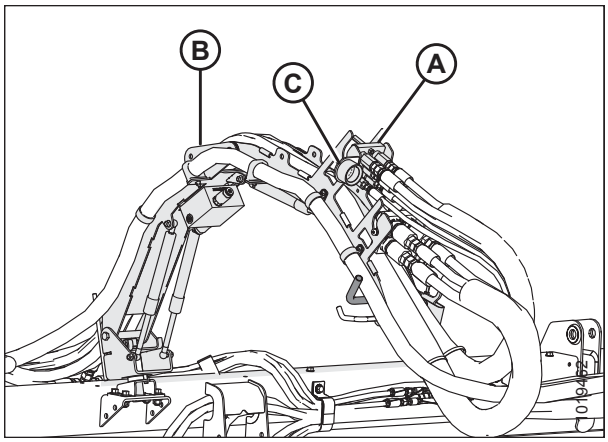

Figure 4.116: Hose Management Arm

15. Disconnect hose management arm (A) from windrower by pulling latch lever (B) to open the latch. Keep latch open and move hose management arm (A) away from header with handle (C).

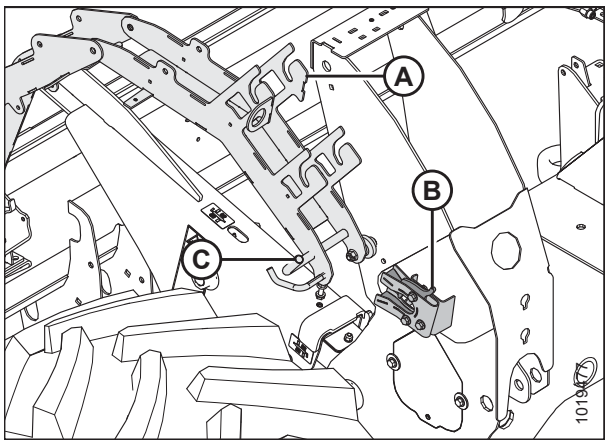

Figure 4.117: Hose Management Arm

16. Pivot hose management arm (B) forward with handle (A), and engage hook (D) into latch (C) on header.

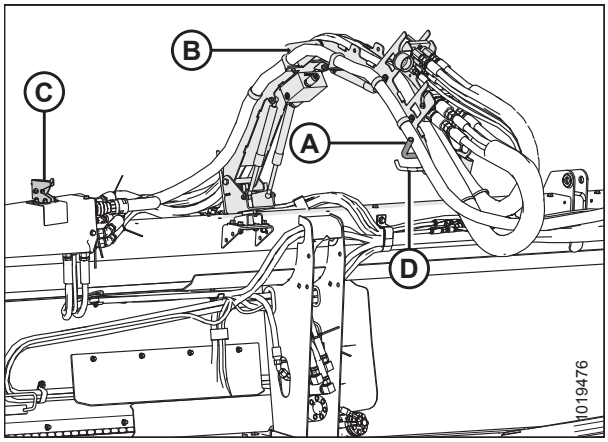

Figure 4.118: Hose Management Arm

17. Remove the header leg pin (B) by removing the hairpin (A) from header leg on both sides.
18. Lower header stand (D) by pulling spring loaded pin (C). Release spring pin to lock stand.

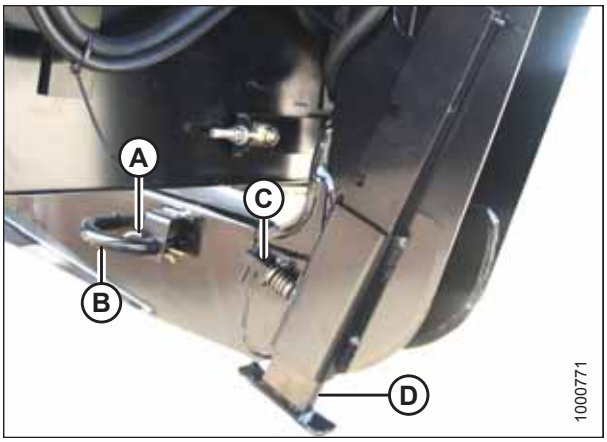

Figure 4.119: Header Stand

19. ***Windrowers with self-aligning center-link:*** Release the center-link latch (A) before returning to the cab.

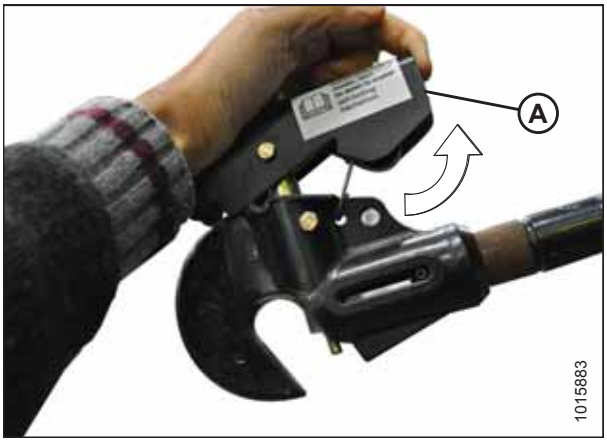

Figure 4.120: Center-Link

20. Disengage safety prop by turning lever (A) downwards until lever locks into the vertical position.
21. Repeat for the opposite side.

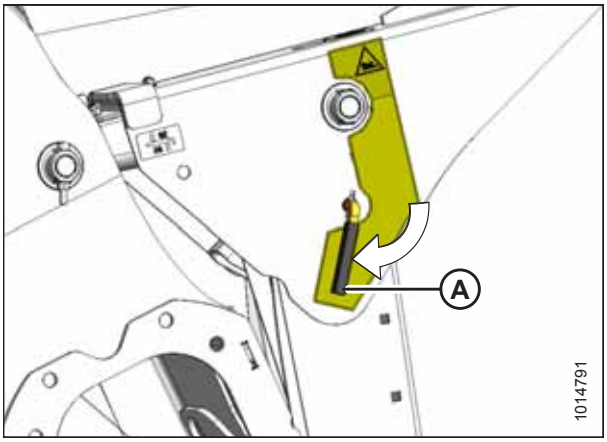

Figure 4.121: Disengaging Safety Prop

CAUTION

Check to be sure all bystanders have cleared the area.

22. Start the engine.
23. Remove header float when prompted by the Harvest Performance Tracker (HPT).

    NOTE:

    If not prompted by the HPT to remove float, remove float manually. For instructions, refer to *Removing and Restoring Float, page 198*.

24. Lower the header to the ground with HEADER DOWN switch (A).
25. Press HEADER TILT switches (B) as required on GSL to release load on center-link.
26. ***Windrowers with self-aligning center-link:***

    a. Press the REEL UP switch (C) to disengage center-link from header.

    b. Proceed to Step *28, page 166*.

27. ***Windrowers without self-aligning center-link:***

    a. Shut off the engine and remove the key.

    b. Disconnect center-link by lifting release (B) and lift hook (A) off header.

    ## CAUTION

    Check to be sure all bystanders have cleared the area.

    c. Start the engine.

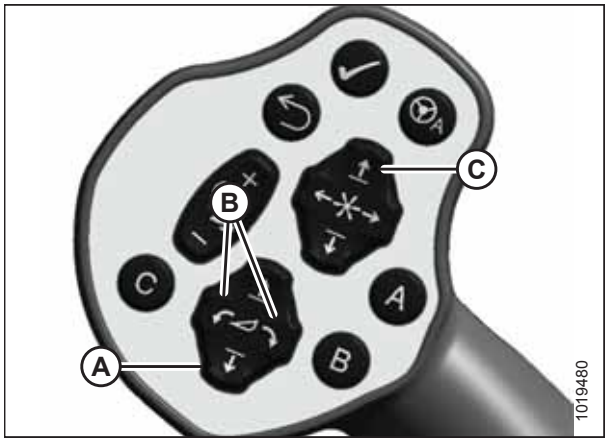

Figure 4.122: GSL

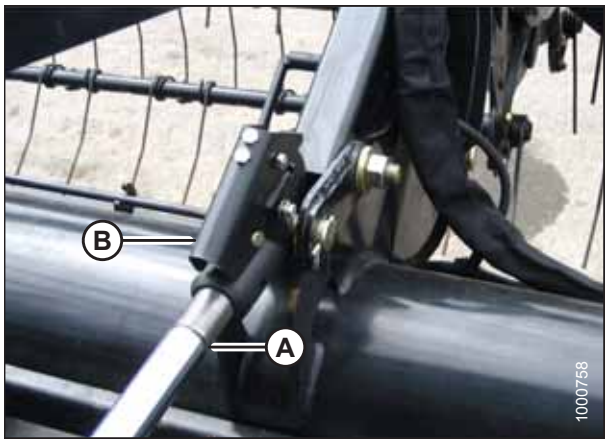

Figure 4.123: Hydraulic Center-Link

28. Back windrower away from header.
29. Reinstall pin (A) into header leg, and secure with hairpin (B).

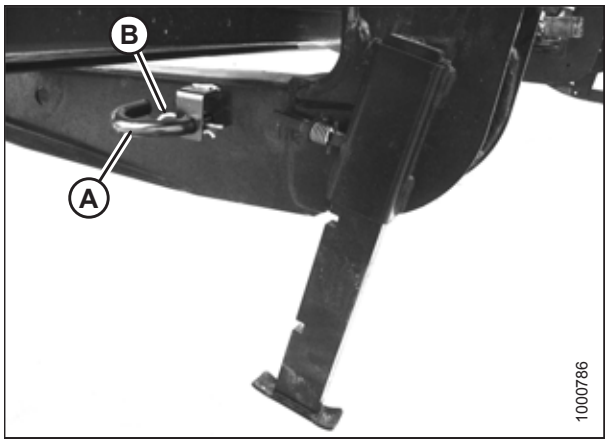

Figure 4.124: Header Stand

4.4.3 R85 4.9 m (16 ft.) Rotary Disc Header

Attaching an R85 4.9 m (16 ft.) Rotary Disc Header

To attach an R85 Rotary Disc Header to a windrower, follow these steps:

WARNING

To avoid bodily injury or death from unexpected startup of the machine, always stop the engine and remove the key from the ignition before leaving the operator's seat for any reason.

1. Remove hairpin (B) from clevis pin (A), and remove pin from header support (C) on both sides of header.

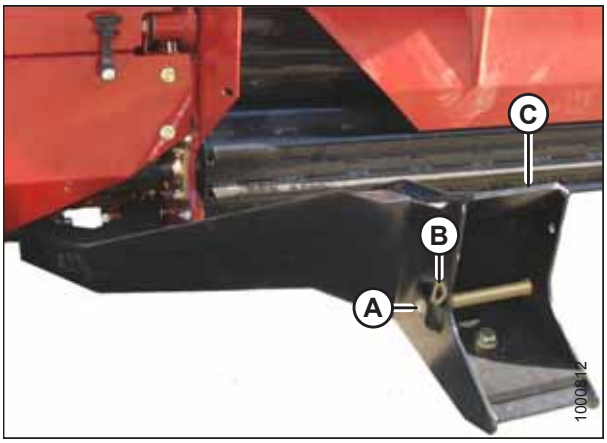

Figure 4.125: Header Support

CAUTION

Check to be sure all bystanders have cleared the area.

2. Start engine.

CAUTION

When lowering header lift legs without a header or weight box attached to the windrower, ensure the float springs tension is fully released to prevent damage to the header lift linkages.

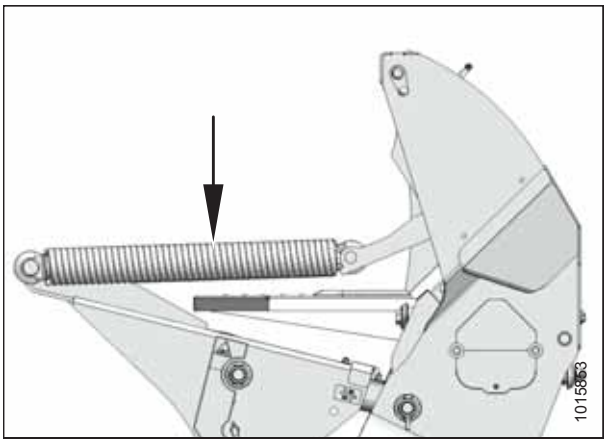

Figure 4.126: Header Float Spring

If not prompted by the harvest performance tracker (HPT) display to remove float, remove float manually by doing the following:

3. Press rotary scroll knob (A) on the Harvest Performance Tracker (HPT) to highlight the QuickMenu options.
4. Rotate scroll knob (A) to highlight HEADER FLOAT symbol (B), and press the scroll knob to select.

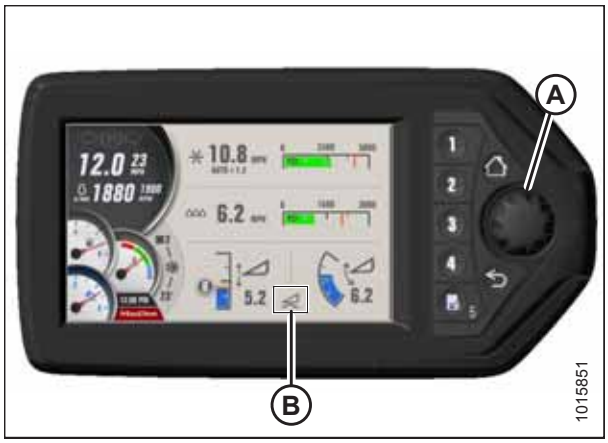

Figure 4.127: HPT Display

5. On the FLOAT ADJUST page, press soft key 3 (A) to remove the header float.

   NOTE:

   If the header float is active, the icon at soft key 3 will say REMOVE FLOAT; if header float has been removed, the icon will say RESUME FLOAT.



Figure 4.128: HPT Display

6. Press HEADER DOWN switch (E) on the ground speed lever (GSL) to fully retract header lift cylinders.
7. Press REEL UP switch (B) on the GSL to raise the center-link until the hook is above the attachment pin on the header.

   IMPORTANT:

   If the center-link is too low, it may contact the header as the windrower approaches the header for hookup.

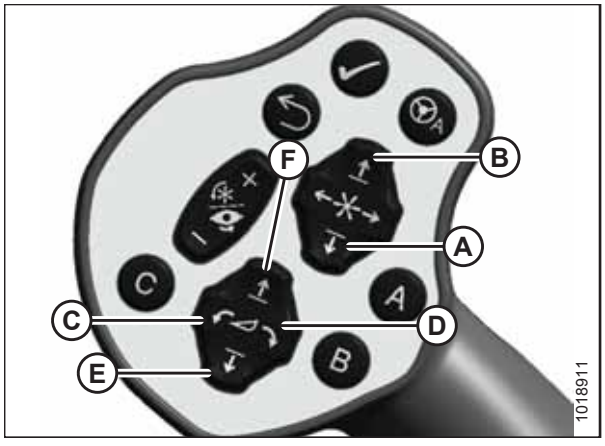

Figure 4.129: GSL

A - Reel Down
B - Reel Up
C - Header Tilt Down
D - Header Tilt Up
E - Header Down
F - Header Up

8. Slowly drive the windrower forward until the windrower feet (A) enter the header supports (B). Continue to drive slowly forward until feet engage the supports and header nudges forward.
9. Ensure that lift linkages are properly engaged in header legs.

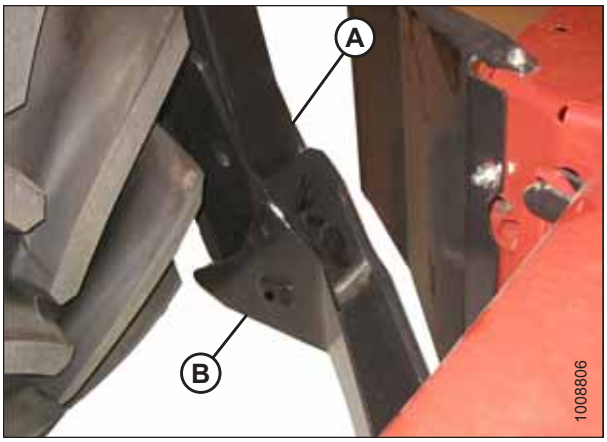

Figure 4.130: Header Support

10. Adjust position of the center-link cylinder (A) with the switches on the GSL until the hook (B) is above the header attachment pin.

    IMPORTANT:

    Hook release (C) must be down to enable self-locking mechanism. If the release is open (up), manually push it down after the hook engages the header pin.

11. Lower center-link (A) onto the header with REEL DOWN switch on GSL until it locks into position (hook release [C] is down). Refer to Figure *4.129, page 168* for GSL controls.
12. Check that the center-link is locked onto header by pressing the REEL UP switch on the GSL. Refer to Figure *4.129, page 168* for GSL controls.

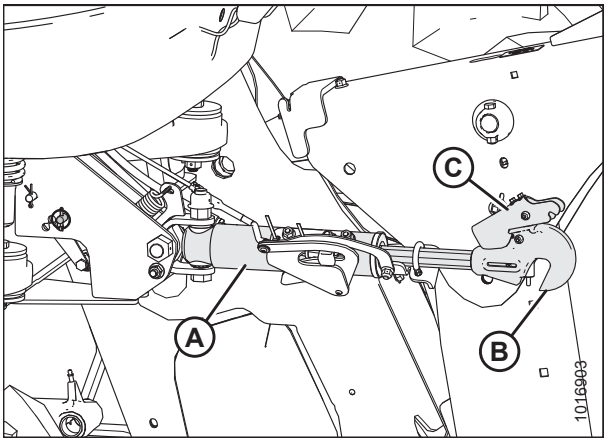

Figure 4.131: Center-Link

CAUTION

Check to be sure all bystanders have cleared the area.

13. Start engine.
14. Press HEADER UP switch (A) to raise header to maximum height.
15. If one end of the header does **NOT** fully raise, rephase the lift cylinders as follows:
    a. Press and hold HEADER UP switch (A) until both cylinders stop moving.
    b. Continue to hold the switch for 3–4 seconds. Cylinders are now phased.
16. Stop the engine and remove the key.



Figure 4.132: GSL

17. Engage safety prop on lift cylinder as follows:

    a. Pull lever (A) and rotate toward header to release, and lower safety prop onto cylinder.

    b. Repeat for opposite lift cylinder.

    IMPORTANT:

    Ensure the safety props engage over the cylinder piston rods. If safety prop does not engage properly, raise header until prop fits over the rod.

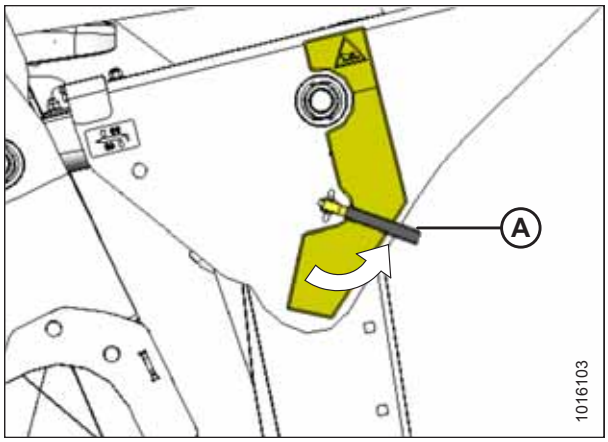

Figure 4.133: Cylinder Safety Prop

18. Install clevis pin (A) through support and foot, and secure with hairpin (B). Repeat for opposite side.

    IMPORTANT:

    Ensure clevis pin (A) is fully inserted and hairpin is installed behind bracket.

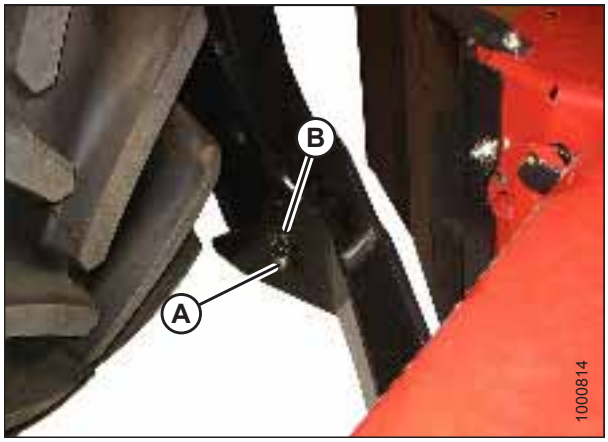

Figure 4.134: Header Support

19. Disengage safety prop by turning lever (A) downward to raise safety prop until lever locks into vertical position.

    NOTE:

    If safety prop will not disengage, raise header slightly.

20. Repeat for opposite side.

CAUTION

Check to be sure all bystanders have cleared the area.

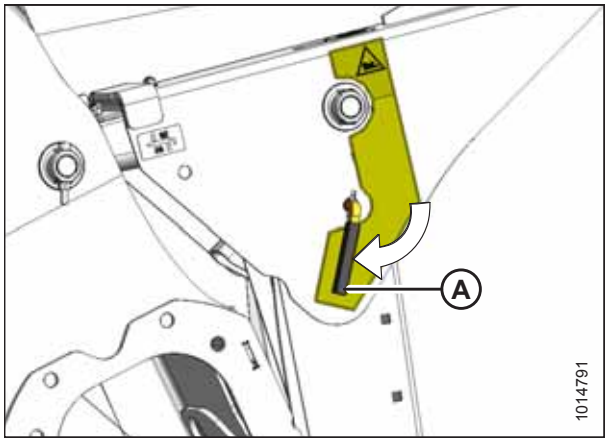

Figure 4.135: Cylinder Safety Prop

21. Start engine and press HEADER DOWN switch (A) on GSL to fully lower header.

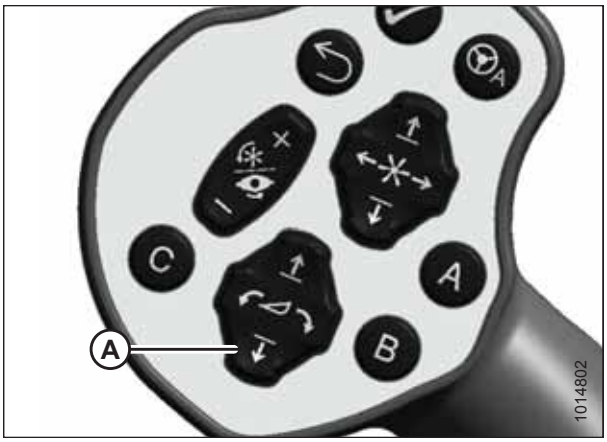

Figure 4.136: GSL

22. Press rotary scroll knob (A) on Harvest Performance Tracker (HPT) to highlight QuickMenu options.
23. Rotate scroll knob (A) to highlight HEADER FLOAT symbol (B), and press scroll knob to select.

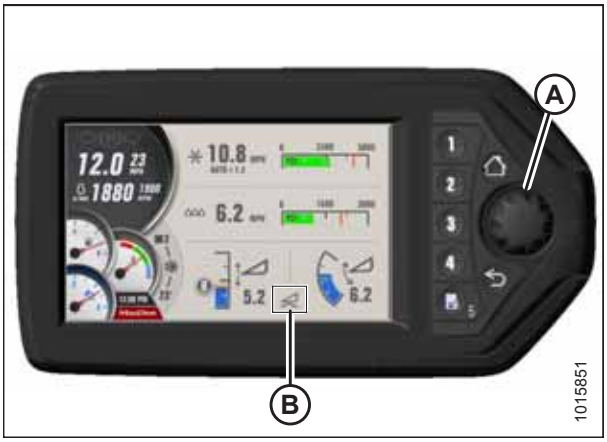

Figure 4.137: HPT Display

24. Turn scroll knob (A) to highlight left or right float setting and press knob (A) to activate selection.
25. Rotate scroll knob (A) to adjust float setting and press knob when finished.

    IMPORTANT:

    Float adjustments of 1.0 (out of 10) change the header weight at the cutterbar by approximately 91 kg (200 lb.). Adjust float in increments of 0.05 to optimize field performance.

26. Stop the engine and remove the key.
27. Grasp one end of the rotary header and lift. Lifting force should be 426–471 N (95–105 lbf) and should be the same at both ends.



Figure 4.138: HPT Display

Connecting R85 4.9 m (16 ft.) Rotary Disc Header Hydraulics

Refer to the following steps to attach the hydraulic hoses and electrical harness from the header to the windrower. Note that these steps are also included in the header operator's manual.

1. Open the left-side platform (A). For instructions, refer to *5.4.1 Opening Platform, page 270*.

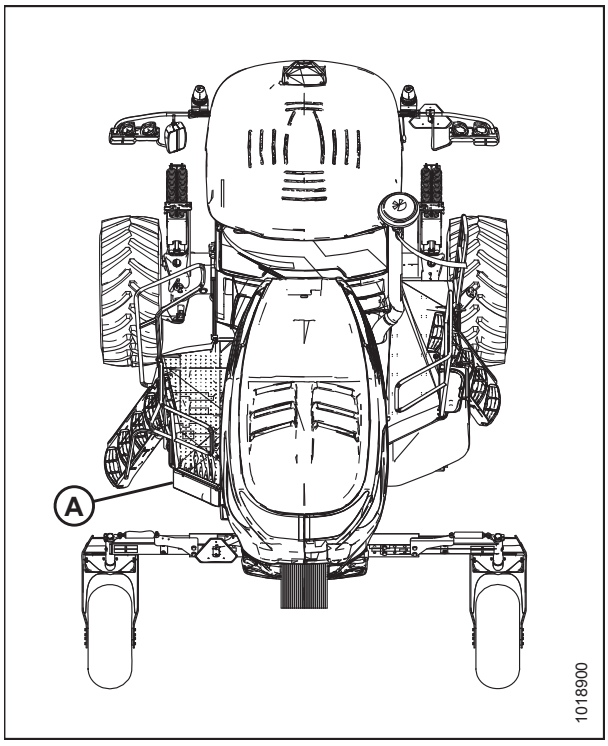

Figure 4.139: M1240 Windrower

2. Route hose bundle (A) from header to under windrower frame.

   NOTE:

   Route hoses as straight as possible and avoid rub/wear points that could damage hydraulic hoses.

3. Insert pin (B) into hole (C) in windrower frame, and place hose bundle on support (D).

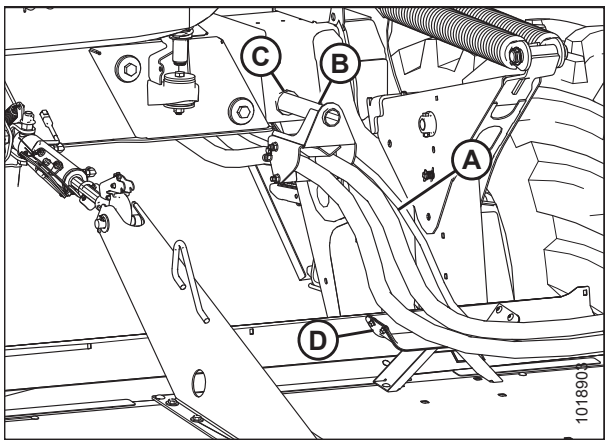

Figure 4.140: Hose and Electrical Routing

4. **Windrowers configured for both rotary disc and draper headers only:** Disconnect hose (A) from windrower receptacle (B) and place in storage cup (C) on multicoupler.

   NOTE:

   If the multicouplers shown in the illustration at right are not on the windrower, then the windrower is configured for rotary disc headers only. Skip this step.

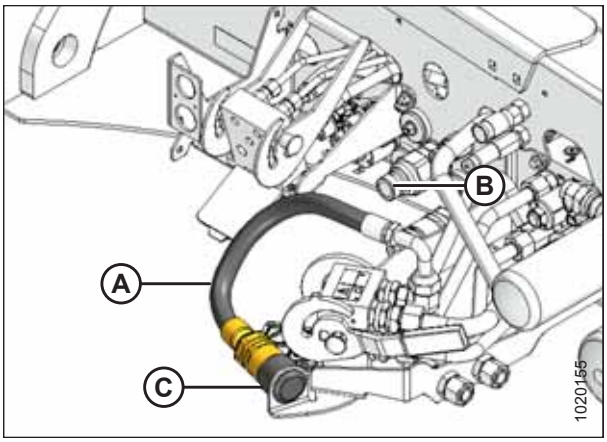

Figure 4.141: Knife Drive Hose on Rotary Disc and Draper Ready Windrower

5. To connect hydraulic hoses to the windrower **with quick-disconnect fittings**, follow these steps:

   NOTE:

   If hoses are not equipped with quick-disconnect fittings, they can be attached directly to the windrower fittings as described in Step *6, page 174*.

   NOTE:

   Some parts have been removed from the illustration for clarity.

   a. To prevent harmful contamination, use a clean rag to remove dirt and moisture from the couplings.

   b. Connect the disc pressure hose (A) with red cable tie to receptacle (B).

   c. Connect the disc return hose (C) to receptacle (D).

   d. Connect the case drain hose (E) to receptacle (F).

   e. Connect the electrical harness to receptacle (G).

      NOTE:

      Ensure the hydraulic hoses have sufficient slack to clear the multicoupler without coming into contact with it. If necessary, increase slack in the hoses by loosening the hose holder at the windrower frame and moving the hoses as required.

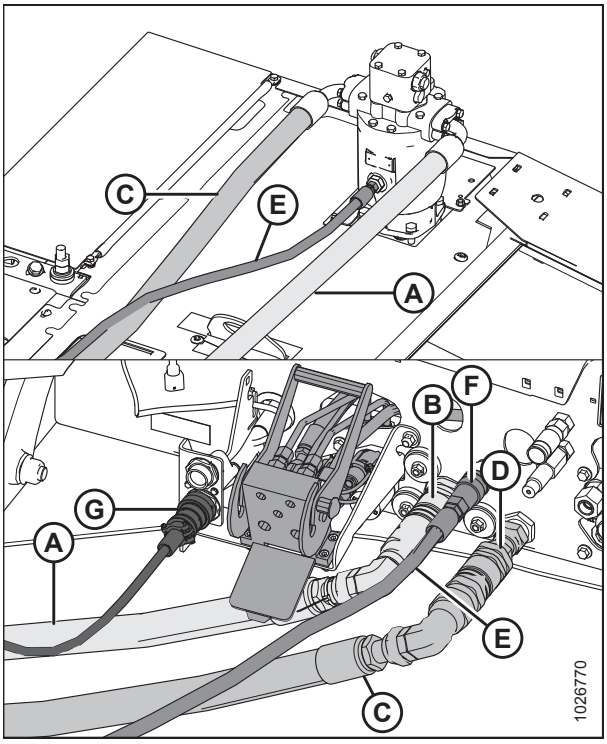

Figure 4.142: Quick-Disconnect Hydraulic and Electrical Connections

6. To directly connect the hydraulic hoses to the windrower **with hard-plumbed fittings**, follow these steps:

   NOTE:

   Some parts have been removed from the illustration for clarity.

   a. To prevent harmful contamination, use a clean rag to remove dirt and moisture from the fittings.

   b. Attach the disc pressure hose (A) to fitting on frame and torque to 205–226 Nm (151–167 lbf·ft).

   c. Connect the disc return hose (B) to fitting on frame and torque to 205–226 Nm (151–167 lbf·ft).

   d. Connect the case drain hose (C) to fitting on frame and tighten.

   e. Connect the electrical harness to receptacle (D).

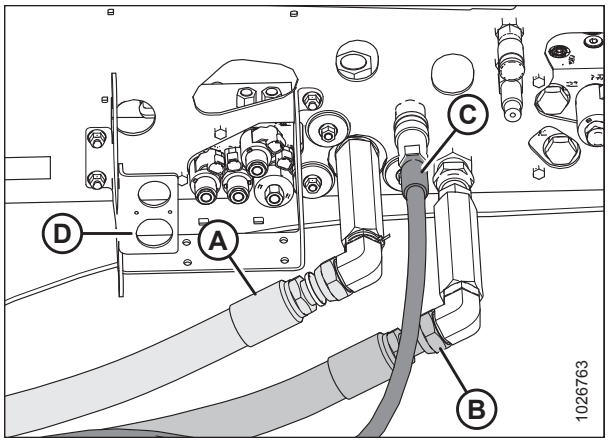

Figure 4.143: Hard-Plumbed Hydraulic and Electrical Connections on a Rotary Disc Ready Windrower

7. Close the side platform. For instructions, refer to *5.4.2 Closing Platform, page 270*.

Detaching R85 4.9 m (16 ft.) Rotary Disc Header

WARNING

To avoid bodily injury or death from unexpected startup of the machine, always stop the engine and remove the key from the ignition before leaving the operator's seat for any reason.

CAUTION

Check to be sure all bystanders have cleared the area.

1. Start the engine, and press switch (A) to raise the header to the maximum height.
2. Stop the engine, and remove the key.



Figure 4.144: Ground Speed Lever

3. Engage safety prop on the windrower's lift cylinder as follows:

   a. Pull lever (A) and rotate toward header to release, and lower safety prop onto cylinder.

   b. Repeat for opposite lift cylinder.

   IMPORTANT:

   Ensure the safety props engage over the cylinder piston rods. If a safety prop does not engage properly, raise the header until the prop fits over the rod.

4. Open the left side platform. Refer to *5.4.1 Opening Platform, page 270*.

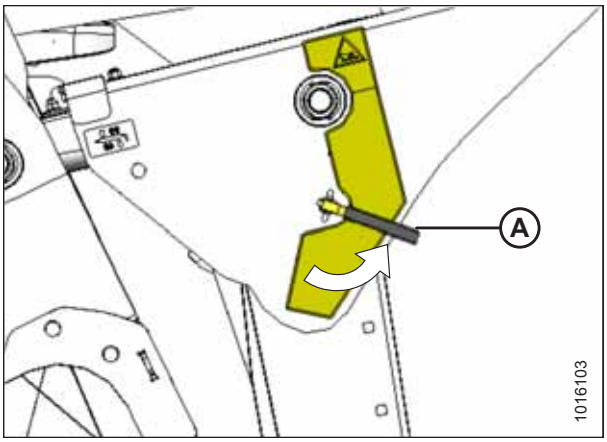

Figure 4.145: Cylinder Safety Prop

5. Disconnect the following electrical harness and hydraulic hoses from the windrower:

   a. Disconnect the disc pressure hose from fitting (A).

   b. Disconnect the disc return hose from fitting (B).

   c. Disconnect the case drain hose from fitting (C).

   d. Disconnect the electrical harness from receptacle (D).

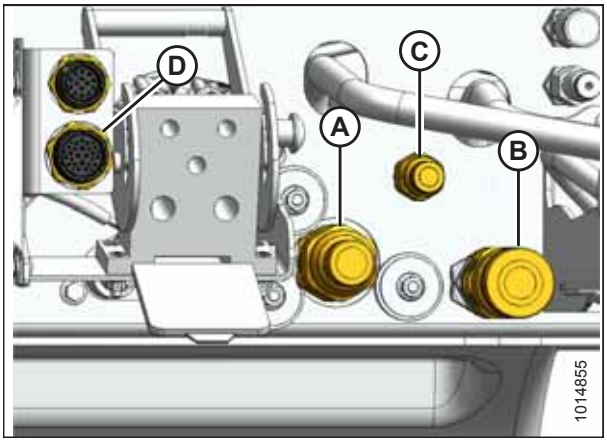

Figure 4.146: Header Drive Hydraulics

6. Remove hairpin (B) from clevis pin (A) and remove clevis pin from header support (C) on both sides of header.

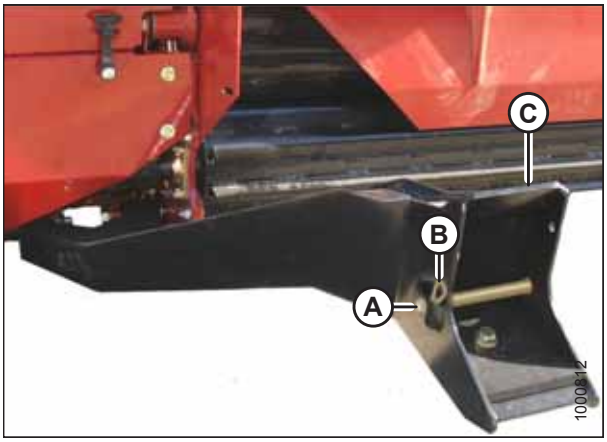

Figure 4.147: Header Supports

7. **For windrowers with self-aligning center-link:** Release center-link latch (A).

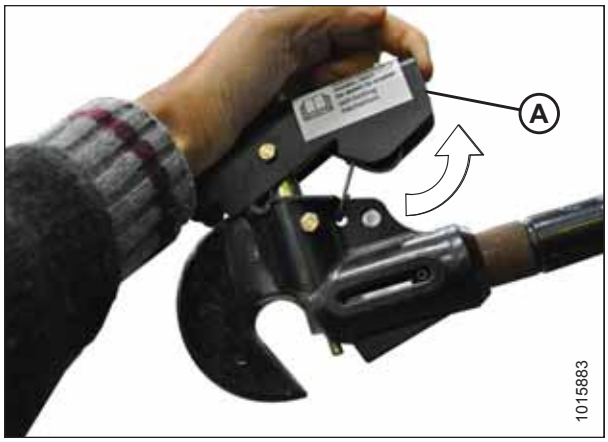

Figure 4.148: Center-Link

8. Disengage safety prop by turning lever (A) downwards until lever locks into the vertical position.
9. Repeat for the opposite side.

CAUTION

Check to be sure all bystanders have cleared the area.

10. Start engine and remove header float when prompted by the Harvest Performance Tracker (HPT).

    NOTE:

    If not prompted by the HPT to remove float, remove float manually. For instructions, refer to *Removing and Restoring Float, page 198*.

11. Lower the header to the ground.
12. **For windrowers with self-aligning center-link:** Use HEADER TILT cylinder switches (A) on GSL to release load on center-link cylinder.
13. Operate the link lift cylinder with the REEL UP switch (B) to disengage the center-link from the header.

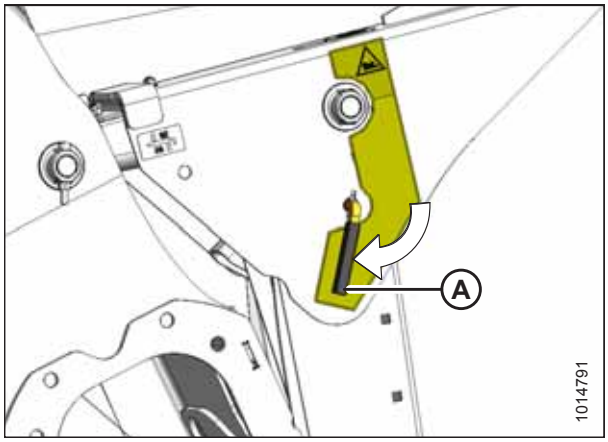

Figure 4.149: Safety Props

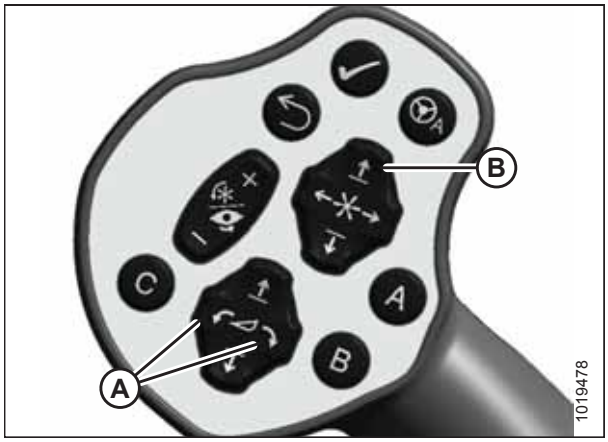

Figure 4.150: GSL

14. **For windrowers without self-aligning center-link:** Shut off the engine and remove the key.
15. Lift hook release (B) and lift hook (A) off header pin.

CAUTION

Check to be sure all bystanders have cleared the area.

16. Start the engine.

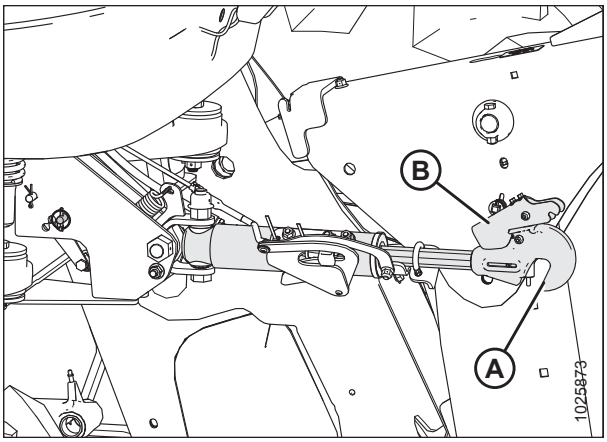

Figure 4.151: Hydraulic Center-Link

17. Slowly back the windrower away from header.
18. Reinstall clevis pin (A) through support (C) and secure with hairpin (B). Repeat for opposite side.

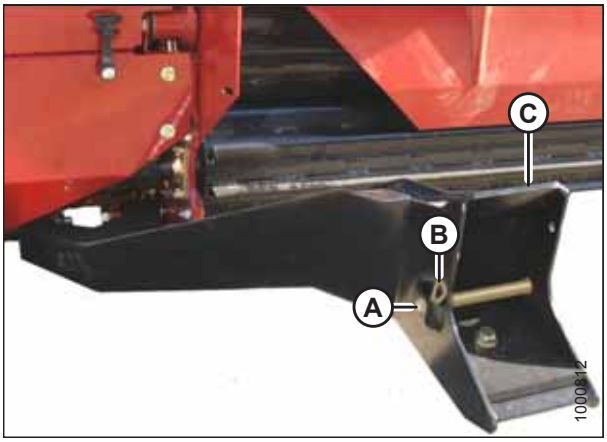

Figure 4.152: Header Support

4.4.4 R113 Rotary Disc Header

Attaching R113 Rotary Disc Header to Windrower

The windrower may have an optional self-aligning hydraulic center-link that allows vertical position control of the center-link from the cab.

WARNING

To avoid bodily injury or death from unexpected startup of the machine, always stop the engine and remove the key from the ignition before leaving the operator's seat for any reason.

1. **Hydraulic Center-Link without Self-Alignment:** Remove pin (A) and raise center-link (B) until hook is above the attachment pin on header. Replace pin (A) to hold center-link in place.

   IMPORTANT:

   If the center-link is too low, it may contact the header as the windrower approaches the header for hookup.

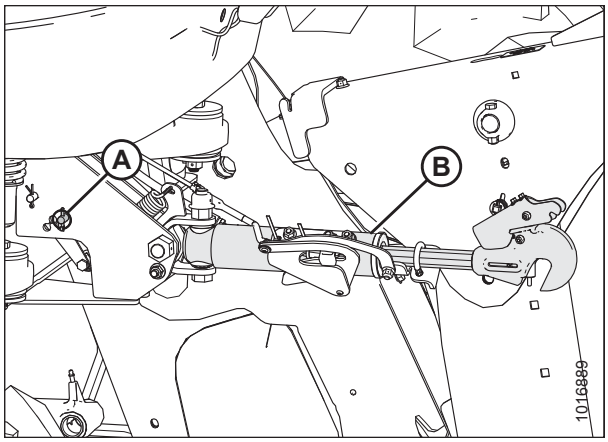

Figure 4.153: Hydraulic Center-Link

2. Remove hairpin (A) from clevis pin (B), and remove pin from header support (C) on both sides of header.

CAUTION

Check to be sure all bystanders have cleared the area.

3. Start windrower engine.

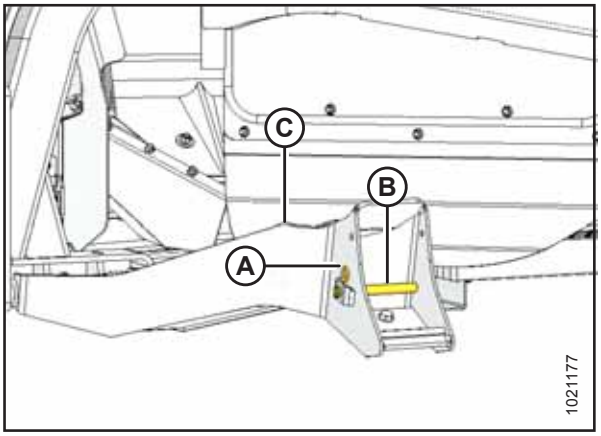

Figure 4.154: Header Support

CAUTION

When lowering header lift legs without a header or weight box attached to the windrower, ensure the float springs tension is fully released to prevent damage to the header lift linkages.

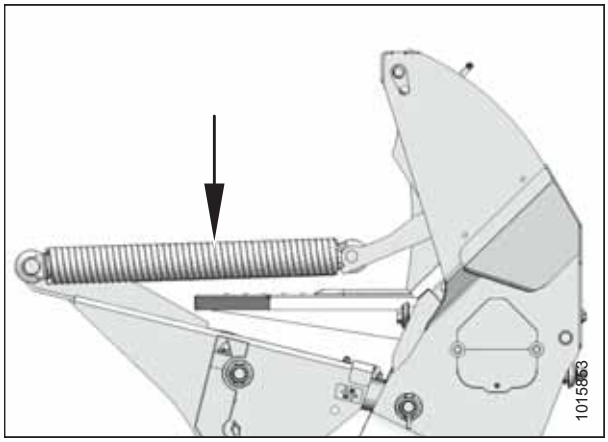

Figure 4.155: Header Float Spring

If not prompted by the Harvest Performance Tracker (HPT) display to remove float, remove float manually by doing the following:

4. Press rotary scroll knob (A) on the HPT display to highlight QuickMenu options.
5. Rotate scroll knob (A) to highlight the HEADER FLOAT symbol (B), and press scroll knob to select. The header float adjust screen displays.

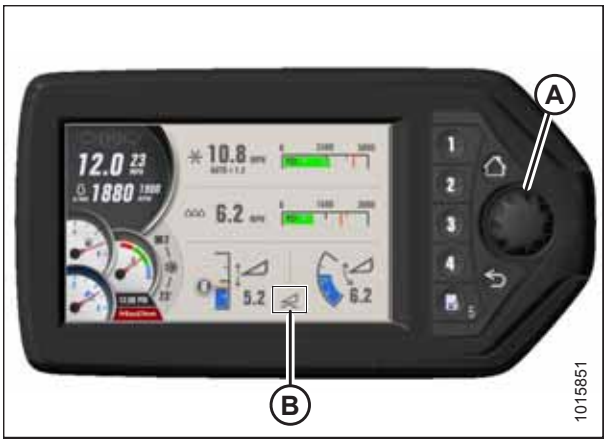

Figure 4.156: HPT Display

6. Press soft key 3 (A) to remove the header float.

   NOTE:

   If the header float is active, the icon at soft key 3 will display REMOVE FLOAT; if header float has been removed, the icon will display RESUME FLOAT.



Figure 4.157: HPT Display

7. Press HEADER DOWN switch (E) on the ground speed lever (GSL) to fully retract header lift cylinders.
8. **Self-Aligning Hydraulic Center-Link:** Press the REEL UP switch (B) on the GSL to raise the center-link until the hook is above the attachment pin on the header.

   IMPORTANT:

   If the center-link is too low, it may contact the header as the windrower approaches the header for hookup.

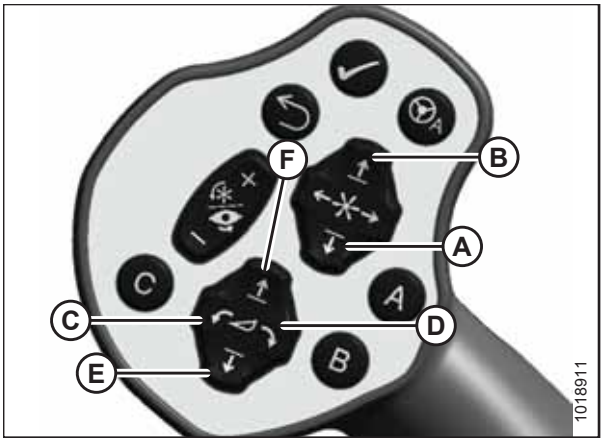

Figure 4.158: GSL

A - Reel Down
B - Reel Up
C - Header Tilt Down
D - Header Tilt Up
E - Header Down
F - Header Up

9. Drive the windrower slowly forward until the feet (A) enter the supports (B). Continue to drive slowly forward until feet engage the supports and header nudges forward.
10. Ensure that feet (A) are properly engaged in supports (B).

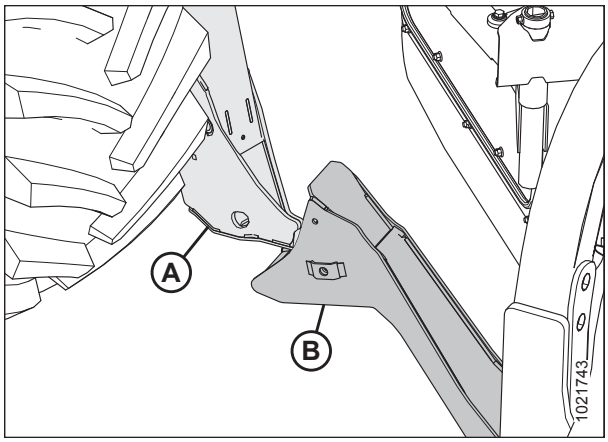

Figure 4.159: Header Support

11. **Self-Aligning Hydraulic Center-Link:**
    a. Adjust position of the center-link cylinder (A) with the switches on the GSL until hook (B) is above the header attachment pin.

       IMPORTANT:

       Hook release (C) must be down to enable self-locking mechanism.

    b. If the hook release (C) is open (up), stop the engine and remove the ignition key. Manually push the hook release (C) down after the hook engages the header pin.
    c. Lower center-link (A) onto the header with REEL DOWN switch on the GSL until the center-link locks into position and the hook release (C) is down.
    d. Check that center-link is locked onto header by pressing the REEL UP switch on the GSL.

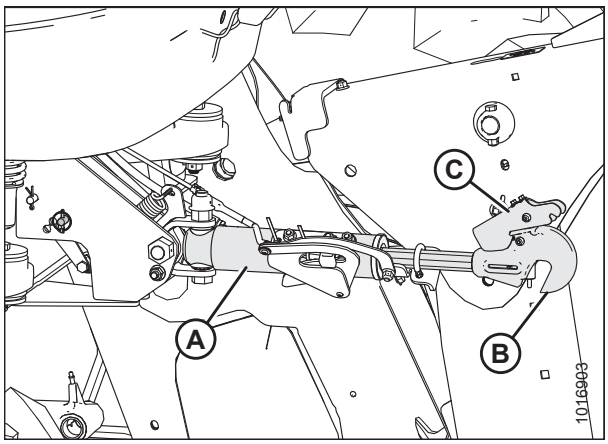

Figure 4.160: Hydraulic Center-Link

12. **Hydraulic Center-Link without Self-Alignment:**
    a. Press HEADER TILT UP or HEADER TILT DOWN cylinder switches on the GSL to extend or retract center-link cylinder until the hook is aligned with the header attachment pin.
    b. Stop the engine and remove the key.
    c. Push down on rod end of link cylinder (B) until hook engages and locks onto header pin.

       IMPORTANT:

       Hook release must be down to enable self-locking mechanism. If the hook release is open (up), manually push it down after hook engages pin.

    d. Check that center-link (A) is locked onto header by pulling upward on rod end (B) of cylinder.

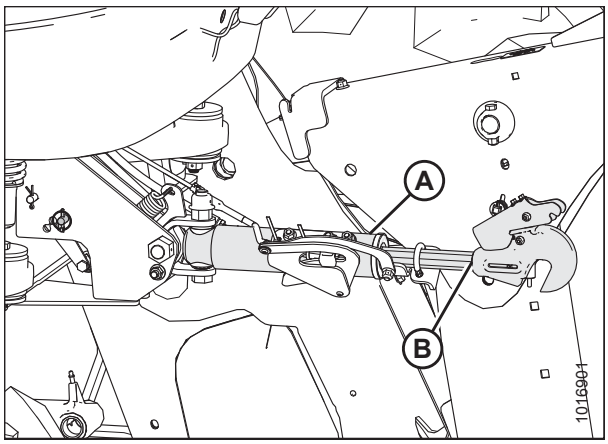

Figure 4.161: Hydraulic Center-Link

CAUTION

Check to be sure all bystanders have cleared the area.

e. Start engine.

13. Press the HEADER UP switch (A) to raise the header to maximum height.

    NOTE:

    If one end of the header does **NOT** fully raise, rephase the lift cylinders as follows:

    a. Press and hold the HEADER UP switch (A) until both cylinders stop moving.

    b. Continue to hold the switch for 3–4 seconds. Cylinders are now phased.

14. Stop the engine and remove the key.



Figure 4.162: GSL

15. Engage safety prop on the windrower's lift cylinder as follows:

    a. Pull lever (A) and rotate toward header to release, and lower safety prop onto cylinder.

    b. Repeat for opposite lift cylinder.

    IMPORTANT:

    Ensure the safety props engage over the cylinder piston rods. If a safety prop does not engage properly, raise the header until the prop fits over the rod.

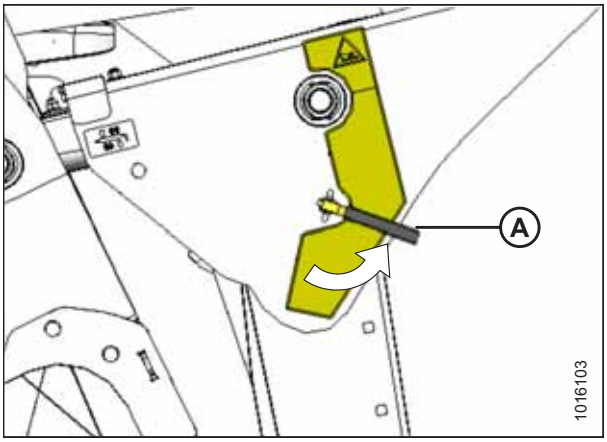

Figure 4.163: Cylinder Safety Prop

16. Install clevis pin (A) through support and windrower lift arm and secure with hairpin (B). Repeat for opposite side.

    IMPORTANT:

    Ensure clevis pin (A) is fully inserted, and hairpin is installed behind bracket.

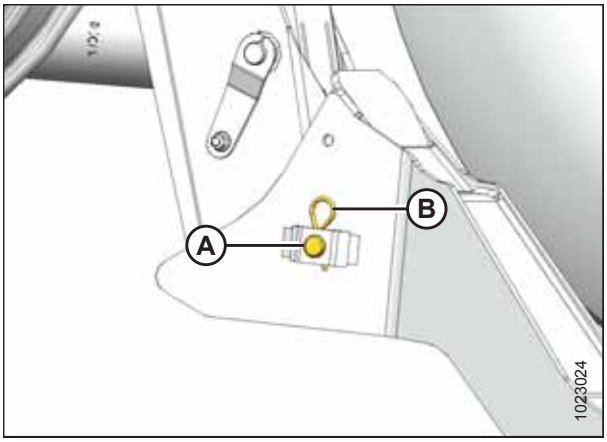

Figure 4.164: Header Support

17. Disengage safety props by turning lever (A) away from the header to raise the safety prop until the lever locks into vertical position. Repeat for opposite cylinder.

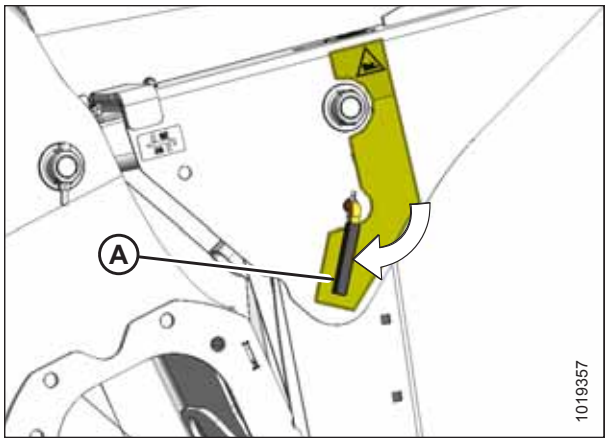

Figure 4.165: Safety Props

18. Start the engine and press HEADER DOWN switch (A) on GSL to fully lower header.

    NOTE:

    If not prompted by the HPT display to restore float, restore float manually.

19. Stop the engine and remove the key.

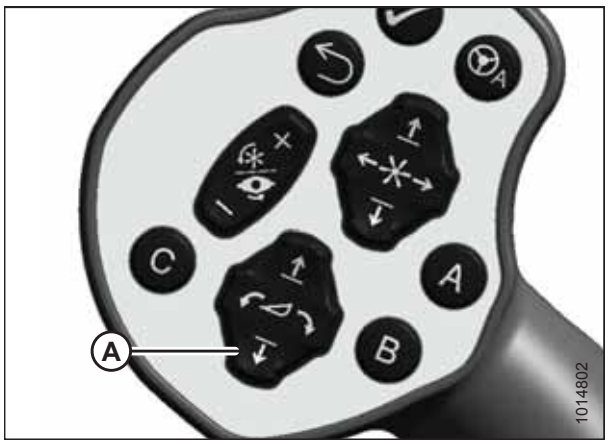

Figure 4.166: GSL

Connecting R113 Rotary Disc Header Hydraulics to an M1240 Windrower

IMPORTANT:

Before connecting the hydraulics from an R113 Rotary Disc Header to an M1240 Windrower, first install the M1240 Low Pressure Case Drain kit (MD #B6698) by following the instructions provided in the kit.

The R113 Rotary Disc Header hydraulics connection procedure varies depending on the windrower configuration:

- Draper header ready windrowers include one set of hydraulic quick couplers which are compatible with the header drive hoses on the R1 SP Series.
- Disc header ready windrowers include hard plumbed hydraulics connections.

NOTE:

The R113 SP hydraulics bundle includes a complete set of quick couplers which can be installed onto a rotary disc header configured windrower.

IMPORTANT:

To prevent contamination of the hydraulic system, use a clean rag to remove dirt and moisture from all (fixed and movable) hydraulic couplers.

1. Retrieve hydraulic hoses (A) from the header and route the hose bundle under the windrower frame.
2. Insert pin (B) into hole (C) in windrower frame, and place hose bundle onto support (D).

   IMPORTANT:

   Route hydraulic hoses as straight as possible, and avoid rub/wear points that could damage hoses. To prevent damage, hoses should have enough slack to pass by the multicoupler bracket without contact. To adjust hose slack, loosen hose holder (B) on the front windrower leg, adjust hoses, then retighten the hose holder.

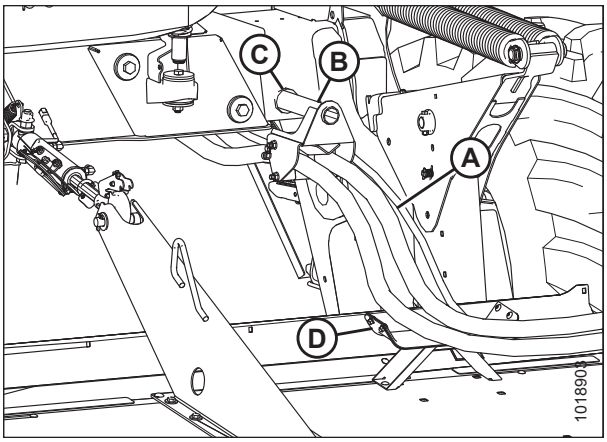

Figure 4.167: Hose Support Attachment

Proceed with the steps that are relevant to the following windrower configurations:

Windrower Configuration	Steps for Connecting Hydraulics and Electrical
Disc/draper ready configuration (A)	Steps *3, page 184* to *5, page 184*
Disc only hard plumbed configuration (B)	Steps *6, page 185* to *7, page 185*
Disc ready configuration (B) with quick couplers installed	Steps *8, page 185* to *12, page 186*

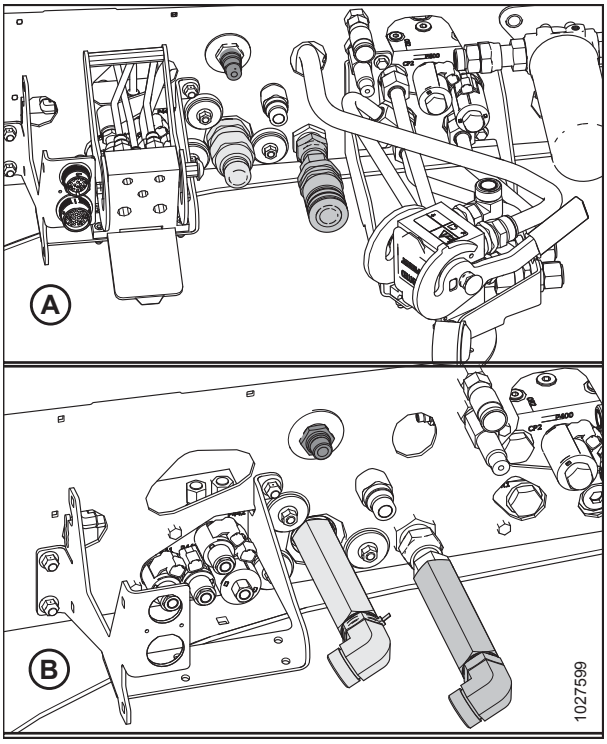

Figure 4.168: M1240 Header Hydraulics Configurations

Disc/draper ready configuration with quick couplers:

3. Ensure hose (A) is disconnected from windrower receptacle (B) and placed in storage cup (C) on multicoupler.

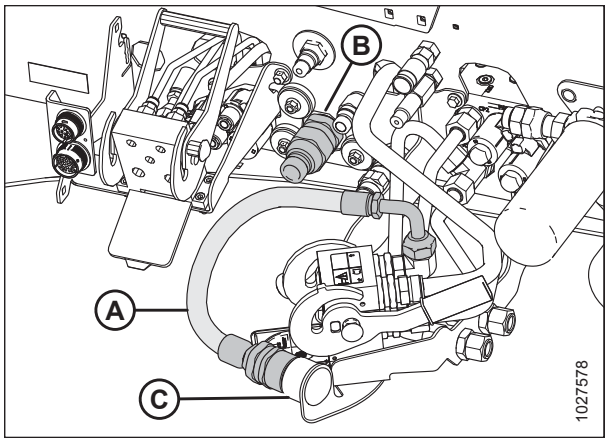

Figure 4.169: Couplers – Draper Ready

4. Remove the extra hydraulic quick couplers from the pressure hose (A) and return hose (B) and store them as spares.

   NOTE:

   It is normal to have an extra set of quick couplers with the disc/draper ready configuration.

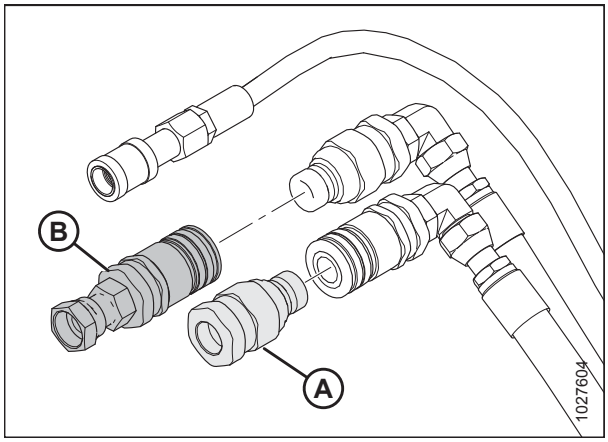

Figure 4.170: Hydraulic Quick Couplers

5. Connect the hydraulic hoses to the windrower with quick coupler fittings, as follows:

   a. Connect pressure hose female coupler to receptacle (A).

   b. Connect return hose male coupler to receptacle (B).

   c. Connect case drain hose (C) to mating 1/2 in. coupler on frame—installed with the M1240 Low Pressure Case Drain kit (B6698). The other 1/2 in. flat faced coupler for the case drain (E) is **NOT** suitable for the R113.

   d. Connect the electrical harness to receptacle (D).

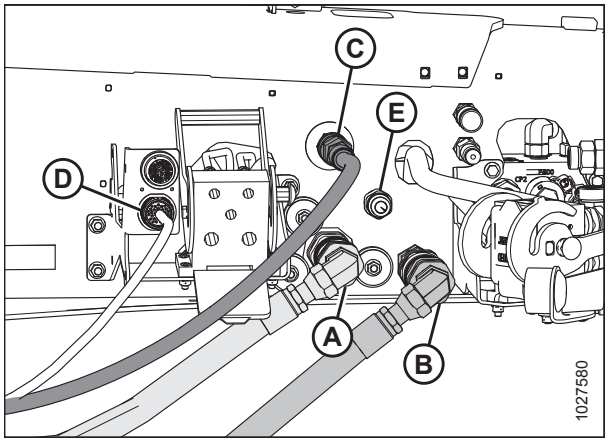

Figure 4.171: Hydraulics and Electrical – Draper Ready

Hard plumbed fittings – disc ready configuration:

6. If installed, remove the existing quick couplers and elbow fittings from the header hydraulic pressure hose (A) and return hose (B). Do **NOT** remove fittings from case drain hose (C).

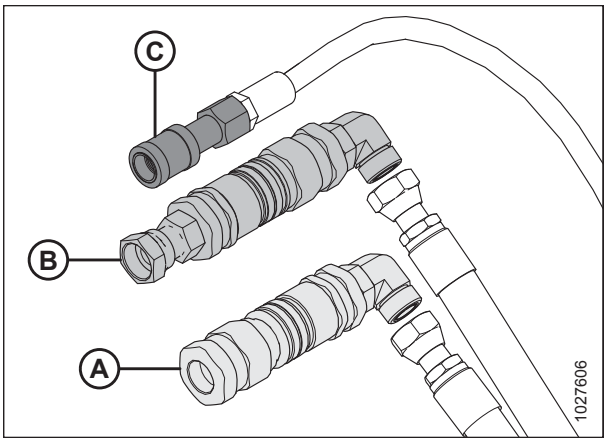

Figure 4.172: R113 Hose Bundle – Disc Ready Windrower

7. Connect the hydraulic hoses to the windrower with hard plumbed fittings as follows:

   a. Connect disc pressure hose (A) to fitting on frame and torque to 205–226 Nm (151–167 lbf·ft).

   b. Connect disc return hose (B) to fitting on frame and torque to 205–226 Nm (151–167 lbf·ft).

   c. Connect case drain hose (C) to mating 1/2 in. coupler on frame—installed with the M1240 Low Pressure Case Drain kit (B6698). The other 1/2 in. flat faced coupler for the case drain (E) is **NOT** suitable for the R113.

   d. Connect the electrical harness to receptacle (D).

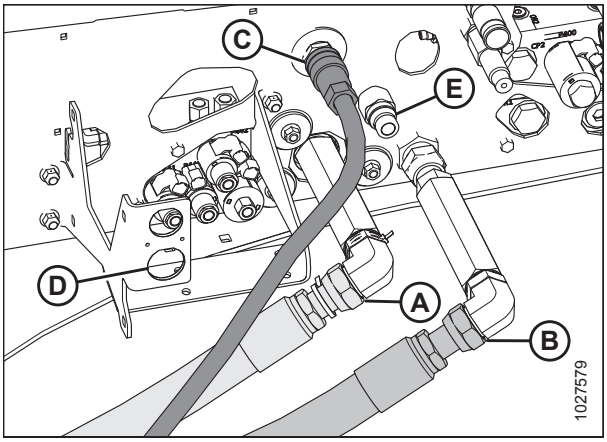

Figure 4.173: Hard Plumbed Connections on Disc Ready Windrower

Quick coupler fittings – disc ready configuration:

8. Remove quick couplers from the pressure hose (A) and the return hose (B) on the R113 hydraulic hose bundle.

   NOTE:

   Do **NOT** remove the fittings on the case drain hose that were installed with the M1240 Low Pressure Case Drain kit (MD #B6698).

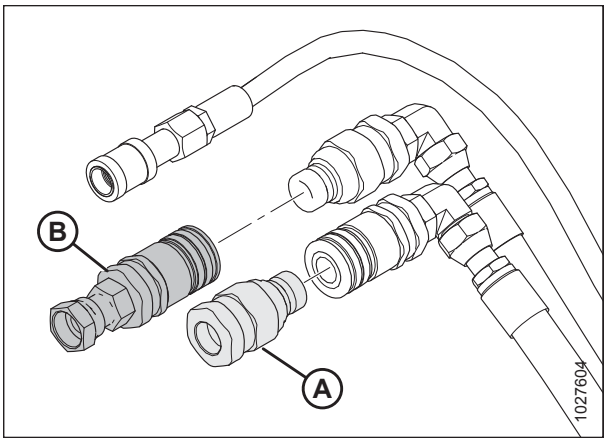

Figure 4.174: Hydraulic Quick Couplers

9. Remove the extension fittings and elbows (A) from the disc header hydraulic pressure and return connections.

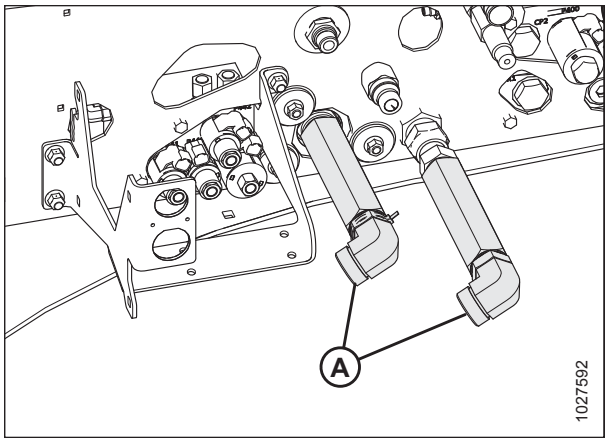

Figure 4.175: Hard Plumbed Connections – Disc Ready Windrower

10. Install the male quick coupler at windrower pressure receptacle (A).
11. Install the female quick coupler with adapter at windrower return receptacle (B).

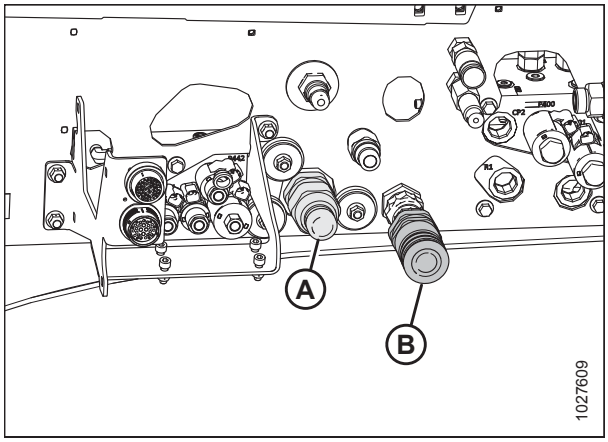

Figure 4.176: Quick Couplers on Disc Ready Windrower

12. Connect the hydraulic hoses to the windrower with quick connect fittings, as follows:
    a. Connect pressure hose (A) female coupler to receptacle.
    b. Connect return hose (B) male coupler to receptacle.
    c. Connect case drain hose (C) to mating 1/2 in. coupler on frame—installed with the M1240 Low Pressure Case Drain kit (B6698). The other 1/2 in. flat faced coupler for the case drain (E) is **NOT** suitable for the R113.
    d. Connect the electrical harness to receptacle (D).

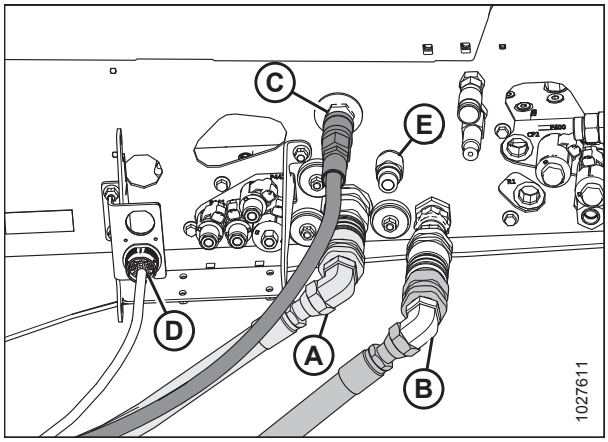

Figure 4.177: Quick Couplers on Disc Ready Windrower

Detaching R113 Rotary Disc Header

WARNING

To avoid bodily injury or death from unexpected startup of the machine, always stop the engine and remove the key from the ignition before leaving the operator's seat for any reason.

CAUTION

Check to be sure all bystanders have cleared the area.

1. Start the engine, and press switch (A) to raise the header to the maximum height.
2. Stop the engine, and remove the key.



Figure 4.178: GSL

3. Disengage safety props by turning lever (A) away from header to raise safety prop until lever locks into vertical position. Repeat for opposite cylinder.

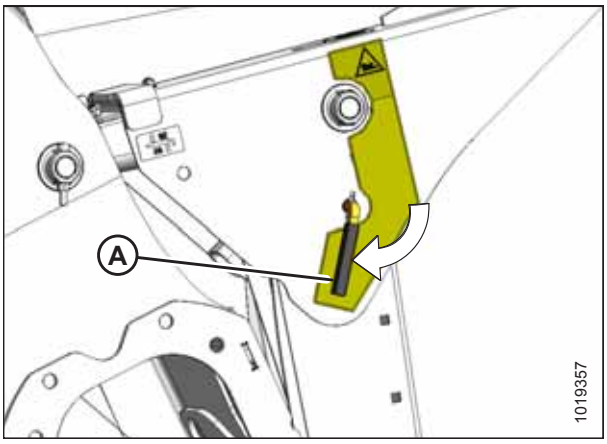

Figure 4.179: Safety Props

4. Open left side platform. For instructions, refer to *5.4.1 Opening Platform, page 270*.

5. Disconnect electrical harness (A) and hydraulic hoses (B), (C), and (D) from the windrower:

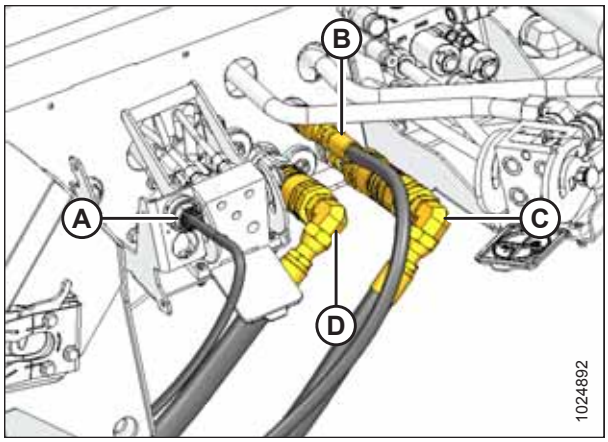

Figure 4.180: Header Drive Hydraulics

6. Remove hose support (A) and hose bundle from windrower frame.

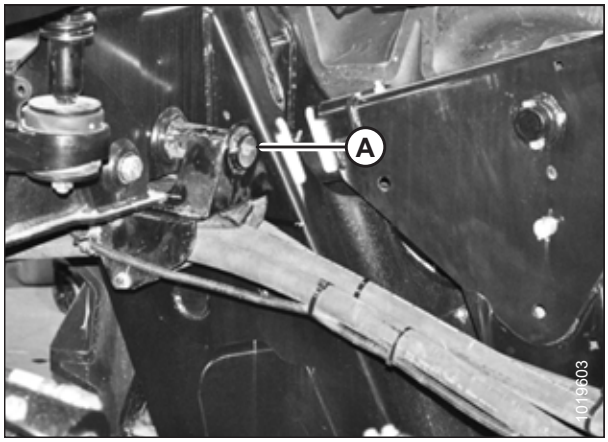

Figure 4.181: Hoses on Windrower

7. Slide support (A) into center-link support (B) and secure with hardware (C).

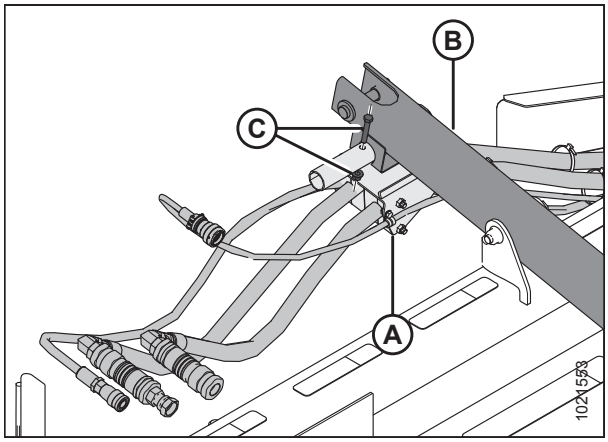

Figure 4.182: Hose Storage Position

8. Store hoses (A) and electrical harness (B) disconnected from the windrower in Step *5, page 188* into storage plate (C).

   NOTE:

   Install caps and plugs on open lines to prevent buildup of dirt and debris while in storage.

   NOTE:

   Some parts removed from the illustration for clarity.

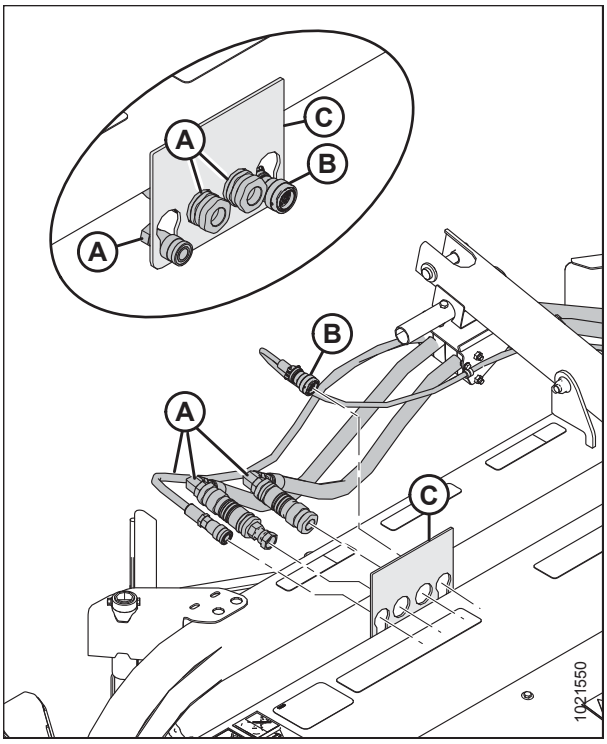

Figure 4.183: Hydraulic Storage Plate

9. Remove hairpin (B) from clevis pin (A). Remove clevis pin from header support (C) on both sides of header.

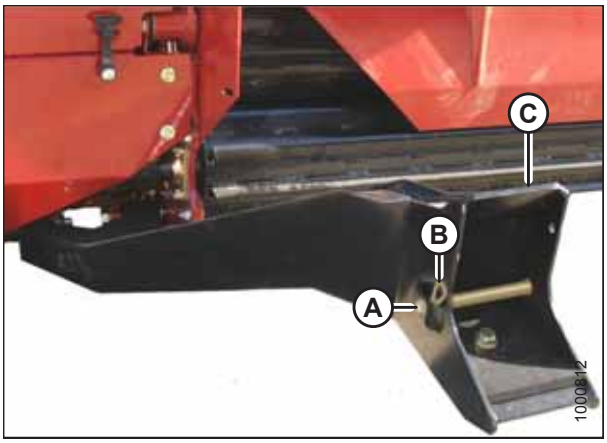

Figure 4.184: Header Supports

Windrowers with center-link self-alignment kit only:

10. Release the center-link latch (A) before returning to the cab.

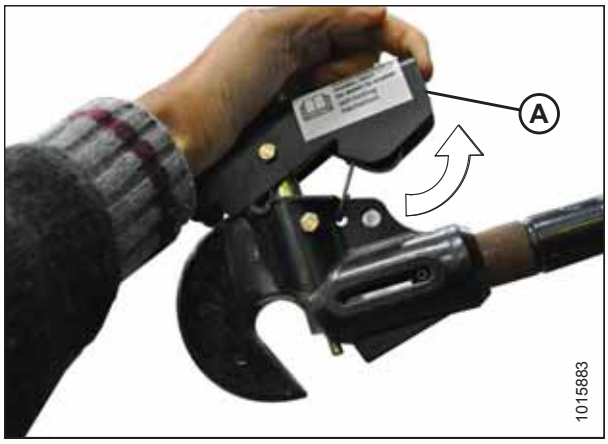

Figure 4.185: Center-Link

11. Disengage safety prop by turning lever (A) downwards until lever locks into the vertical position.
12. Repeat for the opposite side.

CAUTION

Check to be sure all bystanders have cleared the area.

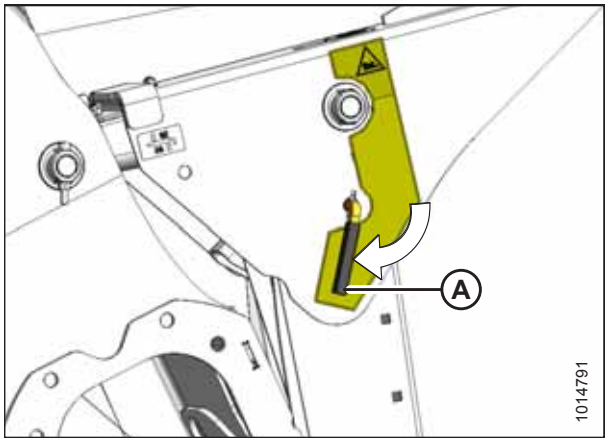

Figure 4.186: Safety Props

13. Start engine and remove header float when prompted by the Harvest Performance Tracker (HPT).

    NOTE:

    If not prompted by the HPT to remove float, remove float manually.

14. Lower the header to the ground.

Self-aligning center-link (if installed):

15. Use HEADER TILT cylinder switches (A) on GSL to release load on center-link cylinder.
16. Operate the link lift cylinder with the REEL UP switch (B) to disengage the center-link from the header.

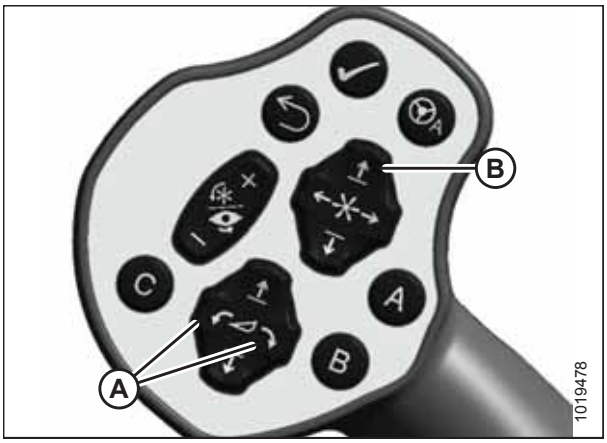

Figure 4.187: GSL

Non-self-aligning center-link:

17. Shut off the engine and remove the key.
18. Lift hook release (A) and lift hook (B) off header pin.

CAUTION

Check to be sure all bystanders have cleared the area.

19. Start the engine.

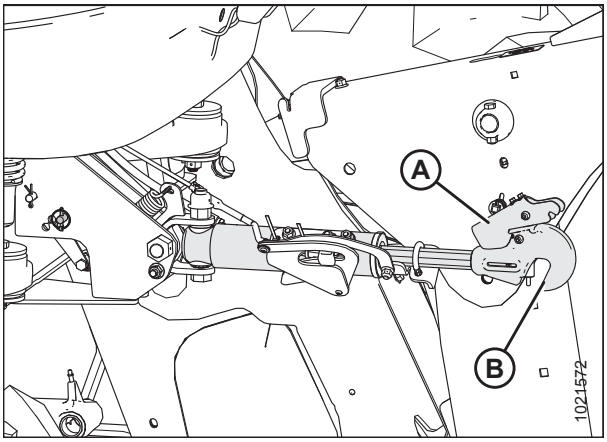

Figure 4.188: Hydraulic Center-Link

20. Back the windrower slowly away from header.
21. Reinstall clevis pin (A) through support (C) and secure with hairpin (B). Repate for opposite side.

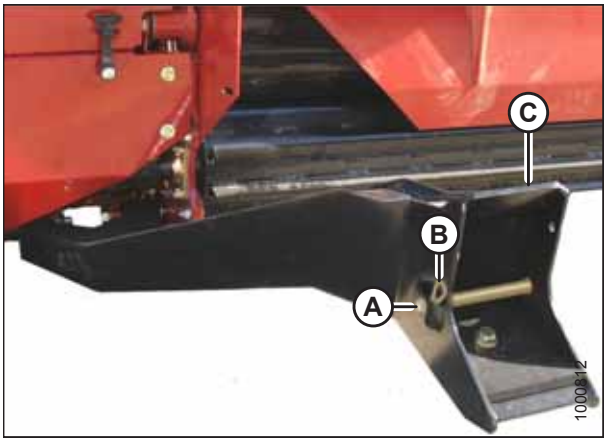

Figure 4.189: Header Support

4.5 Checking Header Settings

1. Navigate to SETTINGS menu with soft key 5 and Harvest Performance Tracker (HPT) scroll knob. For instructions, refer to *3.17.2 Navigating the Harvest Performance Tracker Display, page 80* if required.
2. Scroll to SET-UP HEADER option (A) and press the scroll knob to select it.
3. Scroll to highlight appropriate item and press the scroll knob to select it.
4. Scroll to highlight appropriate option and press the scroll knob to select it.
   - For example, if a draper header is attached, and ATTACHMENTS (B) is selected, the available choice is DOUBLE DRAPER DRIVE.
5. Scroll to highlight appropriate item and press the scroll knob to select it.
6. Press BACK button (A) on the HPT to return to the previous level within the menu structure.
7. Press HOME button (B) on the HPT to return to the last selected run screen (or header disengaged screen).

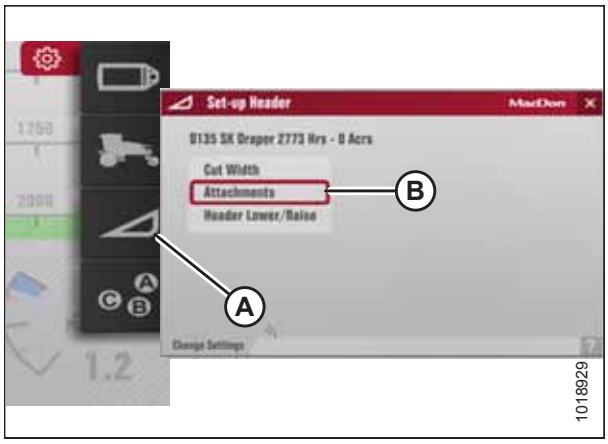

Figure 4.190: Header Settings



Figure 4.191: HPT Display

4.6 Operating a Header

This section describes the operating instructions for the following header types when attached to a MacDon M1240 Windrower: A40DX Auger Header, D1XL Series Draper Header, D1X Series Draper Header, R85 4.9 m (16 ft.) Rotary Disc Header, or R1 Series Rotary Disc Header.

4.6.1 Engaging and Disengaging Header Safety Props

Safety props are located on both header lift cylinders on the windrower. Follow these steps to engage or disengage the header safety props:

DANGER

To avoid bodily injury from fall of raised header, always engage safety props when working on or around raised header, and before going under header for any reason.

1. Start the engine. Press the HEADER UP (A) switch to raise header to maximum height.

   NOTE:

   If one end of the header does **NOT** fully raise, rephase the lift cylinders as follows:

   a. Press and hold the HEADER UP switch (A) until both cylinders stop moving.

   b. Continue to hold the switch for 3–4 seconds. Cylinders are now phased.

2. Shut down the engine, and remove the key from the ignition.



Figure 4.192: Ground Speed Lever

3. Engage safety props on both lift cylinders as follows:

   a. Pull lever (A), rotate toward header to release, and lower the safety prop onto the cylinder.

   b. Repeat for opposite lift cylinder.

   IMPORTANT:

   Ensure the safety props engage over cylinder piston rods. If safety prop does not engage properly, raise the header until the safety prop fits over the rod.

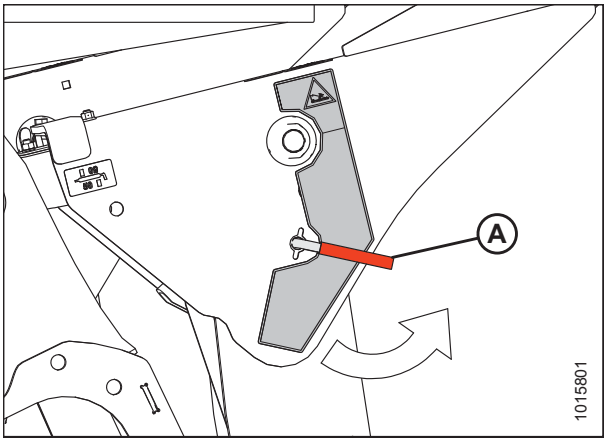

Figure 4.193: Safety Prop

4. Disengage safety props on both lift cylinders as follows:

   NOTE:

   If safety prop will not disengage, raise header to release the prop.

   a. Turn lever (A) away from header to raise safety prop until lever locks into vertical position.

   b. Repeat for opposite cylinder.

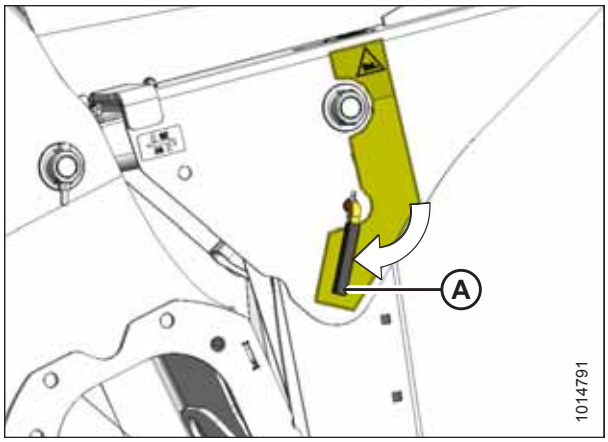

Figure 4.194: Safety Prop

CAUTION

Check to be sure all bystanders have cleared the area.

5. Start the engine, choose a level area, and lower header to the ground. Shut down the engine and remove the key from the ignition.

4.6.2 Using Header Float

The windrower is equipped with float springs that are fully adjustable with hydraulic cylinders. Spring tension is adjustable from 0 to maximum tension through the Harvest Performance Tracker (HPT). The header float feature allows the header to closely follow ground contours and to respond quickly to sudden changes or obstacles. The float setting is ideal when the cutterbar is on the ground with minimal bouncing, or scooping, or pushing soil.

IMPORTANT:

- Set header float as light as possible—without excessive bouncing—to avoid frequent breakage of knife components, scooping soil, or soil build-up at the cutterbar in wet conditions.
- Avoid excessive bouncing (resulting in a ragged cut) by operating at a slower ground speed when the float setting is light.
- Before setting header float, install header options (upper cross auger, skid shoes, transport kit, etc.). If the Slow Speed Transport (SST) tow bar will be stored on the header during operation, set float with tow bar in place.
- Adjust the float when adding or removing optional attachments that affect the weight of the header.

Checking Float

WARNING

To avoid bodily injury or death from unexpected startup of the machine, always stop the engine and remove the key from the ignition before leaving the operator's seat for any reason.

CAUTION

Before starting the machine, check to be sure all bystanders have cleared the area.

1. Start the engine.
2. Use the HEADER TILT switches (A) on the ground speed lever (GSL) to set the center-link to the mid-range position (**5.0** on the Harvest Performance Tracker [HPT]).
3. If checking float with a draper header attached, set the reel to the normal operating position.
4. Using the HEADER DOWN switch (B), lower the header fully and with the header lift cylinders fully retracted.

   NOTE:

   Ensure header is level with ground with zero tilt.
5. Turn the engine off, and remove the ignition key.
6. Grasp one end of the header and lift. The force required to lift the header should the same at both ends (refer to Table *4.3, page 195*).

   Grasp one end of the header and lift. Lifting force should be 335–380 N (75–85 lbf) and should be the same at both ends.

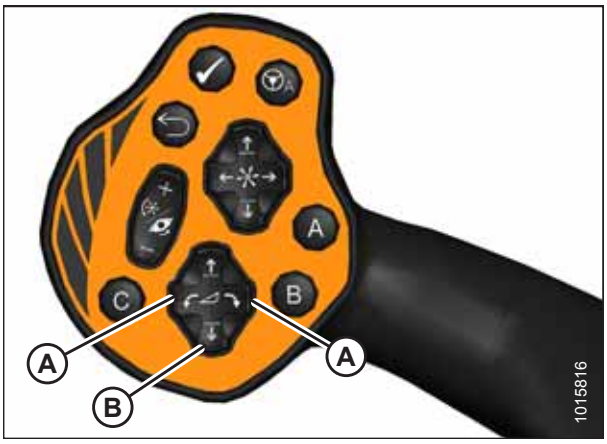

Figure 4.195: GSL

Table 4.3 Target Header Float Values

Header Type	Force Required to Lift Header at the Ends with Lift Cylinder Fully Retracted
Draper	335–380 N (75–85 lbf) with stabilizer/transport wheels raised (if equipped)
Auger	335–380 N (75–85 lbf)
Rotary Disc	426–471 N (95–105 lbf)

7. Restart the engine, and adjust float as required. For instructions, refer to *Setting the Float, page 196*.

   NOTE:

   Increasing the float value on the HPT makes the header feel lighter.

Setting the Float

The float can be set for windrowing with the cutterbar on the ground or with the cutterbar off the ground (normally used with the draper header).

Cutterbar on ground

The optimum float setting lets the header follow the contour of the terrain. Proceed as follows:

1. Set center-link to mid-range position (**5.0** on the Harvest Performance Tracker [HPT]). For instructions, refer to *4.6.4 Adjusting Header Angle, page 200*.
2. Lower the header until the cutterbar is on the ground.

   NOTE:

   To minimize scooping rocks when operating at the flattest header angle, lower the header skid shoes. For instructions, refer to your header operator's manual.

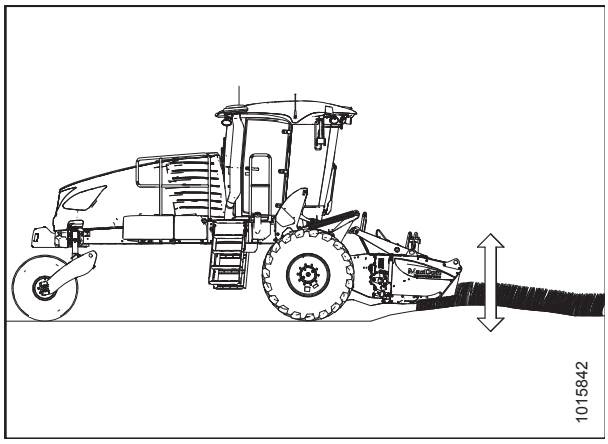

Figure 4.196: Header Float – Cutterbar on Ground

3. Press rotary scroll knob (A) on the HPT to display the QuickMenu system.
4. Rotate scroll knob (A) to highlight header float icon (B) and press scroll knob to select.

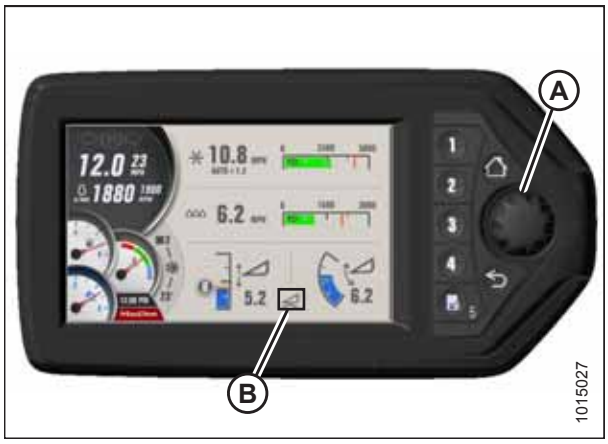

Figure 4.197: HPT Run Screen

5. Turn scroll knob (A) to highlight left (B) or right (C) float and press knob (A) to activate selection.
6. Rotate scroll knob (A) to adjust float setting and press knob when finished. Float is now set.

   NOTE:

   Float adjustments of **1.0** (out of 10) change the header weight at the cutterbar by approximately 91 kg (200 lb.). Adjust float in increments of **0.05** to optimize field performance.
7. Use soft key 3 (D) to remove/resume float and deck position to previous setting for the attached header.



Figure 4.198: HPT Left and Right Float Settings

Cutterbar off ground – draper header only

The optimum float setting and stabilizer wheel setting lets the header cut the crop evenly with minimal bouncing. Proceed as follows:

1. Set center-link to mid-range position (**5.0** on the Harvest Performance Tracker [HPT]). For instructions, refer to *4.6.4 Adjusting Header Angle, page 200*.
2. Set cutting height with header height controls on the GSL. For instructions, refer to *4.6.5 Setting Cutting Height, page 202*.

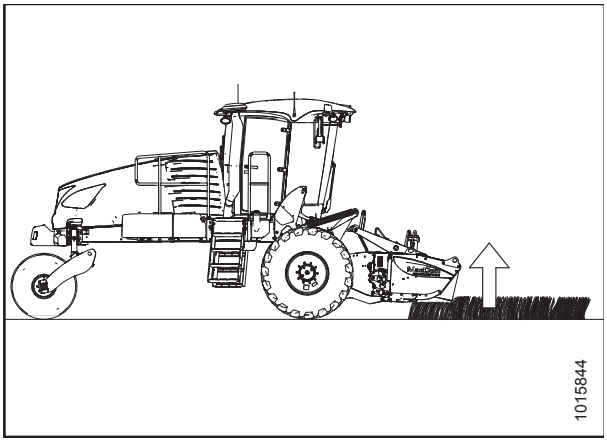

Figure 4.199: Header Float – Cutterbar off Ground

3. Press rotary scroll knob (A) on HPT to display the QuickMenu system.
4. Rotate scroll knob (A) to highlight header float icon (B) and press scroll knob to select.

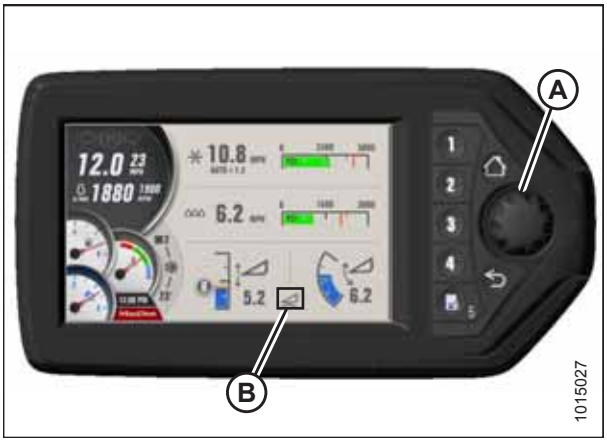

Figure 4.200: HPT Run Screen

5. Turn scroll knob (A) to highlight left (B) or right (C) float and press knob (A) to activate selection.
6. Turn scroll knob (A) to adjust float setting and press knob when finished.

   IMPORTANT:

   Float adjustments of **1.0** (out of 10) change the header weight at the cutterbar by approximately 91 kg (200 lb.). Adjust float in increments of **0.05** to optimize field performance.
7. Float is now set.
8. Use soft key 3 (D) to remove/resume float and deck position to previous setting for the attached header.



Figure 4.201: HPT Left/Right Float Settings

Removing and Restoring Float

Follow these steps to remove and restore the header float settings:

1. Press rotary scroll knob (A) on Harvest Performance Tracker (HPT) to display the QuickMenu system or press F1 on the console.
2. Rotate scroll knob (A) to highlight header float icon (B) and press scroll knob to select.

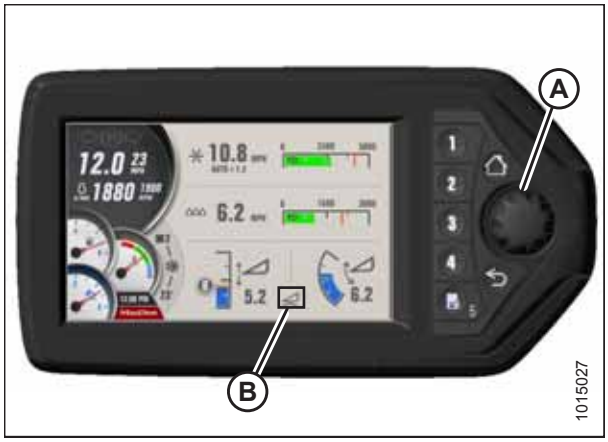

Figure 4.202: HPT Run Screen

3. Press soft key 3 (A) to remove or restore the header float.

   NOTE:

   If the header float is active, the icon at soft key 3 will say REMOVE FLOAT; if header float has been removed, the icon will say RESTORE FLOAT.



Figure 4.203: HPT Display – Adjusting Float

4.6.3 Header Drive

All header controls are conveniently located on the operator's console and on the ground speed lever (GSL) handle.

NOTE:

Some controls are optional equipment and may not be present in your unit. Some controls may be installed, but will be nonfunctional for certain headers.

Engaging and Disengaging the Header

The HEADER ENGAGE switch engages and disengages the header drive.

CAUTION

Check to be sure all bystanders have cleared the area.

To engage header: Push and hold HEADER ENGAGE switch (A) down, while pulling up on the collar (B).

To disengage header: Push HEADER ENGAGE switch (A) down.

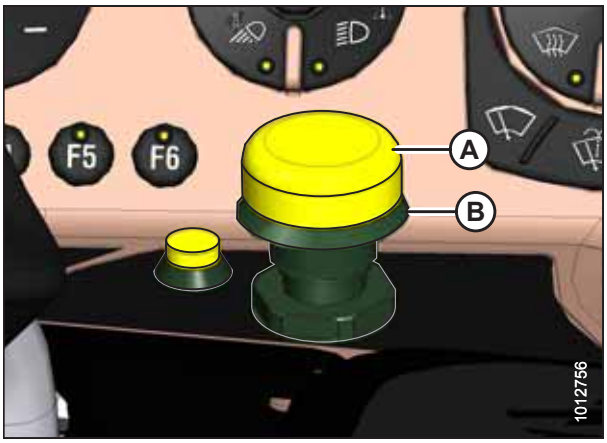

Figure 4.204: Header Engage Switch

Reversing the Header

When reversing, the following header functions will turn in reverse:

- D1XL Series Draper Headers: knife
- D1X Series Draper Headers: knife
- R85 Rotary Disc Headers: conditioner and discs
- R1 Series Rotary Disc Headers: conditioner and discs
- A40DX Auger Headers: knife, conditioner, auger and reel
- A40DX GSS Auger Headers: knife, auger and reel

Reverse the header as follows:

1. Press and hold the HEADER DRIVE REVERSE button (A).
2. Press and hold HEADER ENGAGE switch (B). Pull up on collar (C), until switch (B) is in the ENGAGED position.
3. When you are ready to return to forward operation, release HEADER DRIVE REVERSE button (A) to stop the header.
4. Push down HEADER ENGAGE switch (B) to OFF position. The header can now be restarted. For instructions, refer to *Engaging and Disengaging the Header, page 199*.

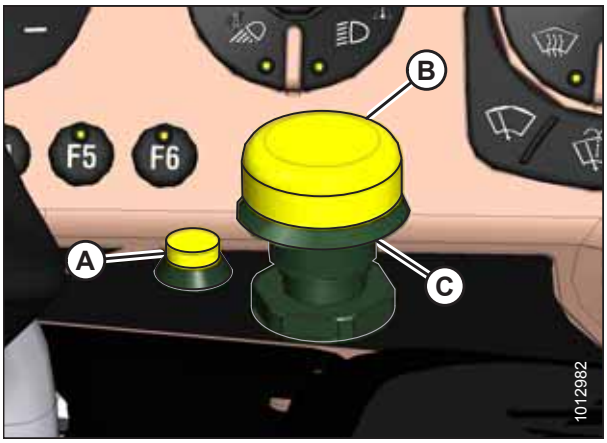

Figure 4.205: Header Drive Controls

4.6.4 Adjusting Header Angle

Header angle is the angle between the ground and the drapers/cutterbar. It is adjustable to accommodate crop conditions and soil types.

Refer to the appropriate header operator's manual for the range of adjustment and recommended settings for your particular header.

Figure 4.206: HPT Display and GSL

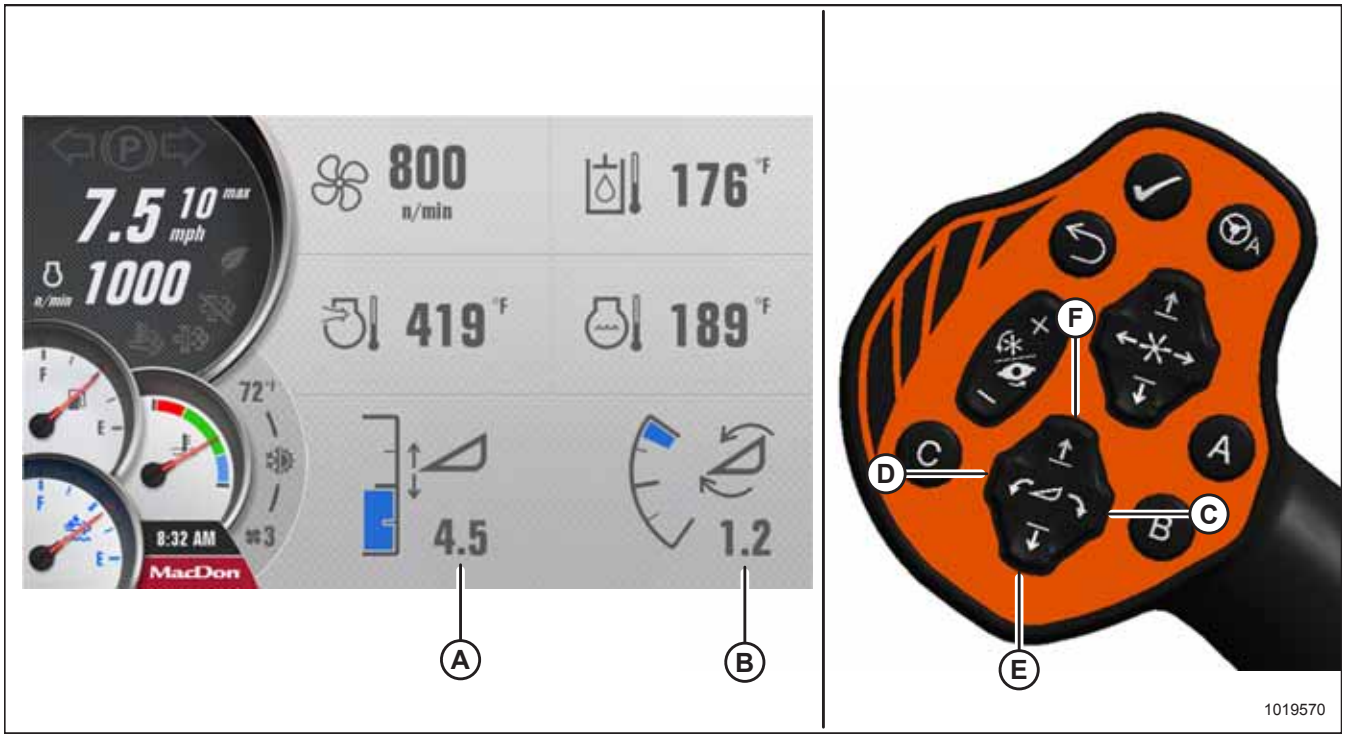

The header angle can be hydraulically adjusted from the cab without shutting down the windrower. A readout on the Harvest Performance Tracker (HPT) display indicates the header height (A) and header angle (B).

IMPORTANT:

- Changing header angle affects header float because it has the effect of making the header lighter or heavier. Adjust float as required. Refer to *Setting the Float, page 196*.
- To prevent excessive guard breakage when conditions are suited to lighter float (e.g., rocky), do **NOT** use the ground speed lever (GSL) tilt control (C) and (D) while in motion. Instead, use the header height (E) and (F) control.

Adjust the header angle as follows:

- To decrease (flatten) header angle, operate the HEADER TILT UP switch (C) on the GSL to retract the cylinder.
- To increase (steepen) header angle, operate the HEADER TILT DOWN switch (D) on the GSL to extend the cylinder.

NOTE:

The HEADER TILT switches (C) and (D) can be locked out to prevent unintentional header angle changes when pressing the header height control switches (E) and (F). Refer to *3.17.6 Activating Control Locks, page 98*.

Checking Self-Locking Center-Link Hook

Periodically check the operation of the hook locking mechanism as follows and ensure that it is working properly:

WARNING

To avoid bodily injury or death from unexpected startup of the machine, always stop the engine and remove the key from the ignition before leaving the operator's seat for any reason.

1. If a header is attached to the windrower, lower header to the ground.
2. Turn off the engine and remove the key from the ignition.
3. Pull up on handle (A) to release the locking device, and lift the hook off the header pin.

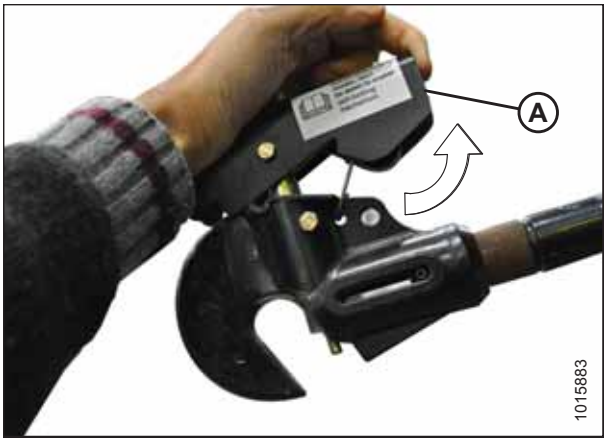

Figure 4.207: Center-Link

4. Lower handle (A) into the **locked** position.
5. Push up on lock pin (B) only (not the actuator rod [C]). Handle should catch on casting and pin should **NOT** lift.

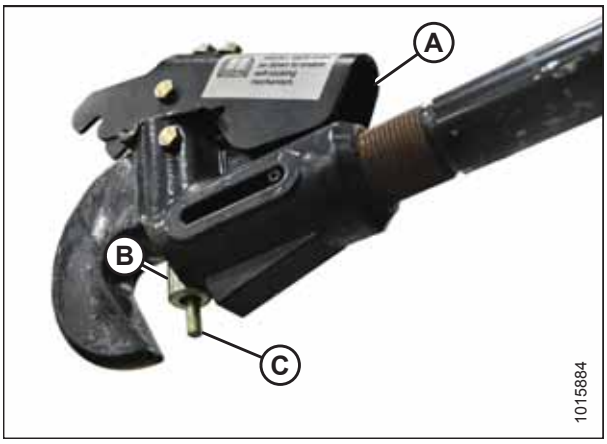

Figure 4.208: Center-Link Hook

6. Push up on the actuator rod. The lock pin should lift with the handle.



Figure 4.209: Center-Link Hook

4.6.5 Setting Cutting Height

Cutting height is adjusted by raising or lowering the header with the HEADER UP (A) or HEADER DOWN (B) switches on the ground speed lever (GSL).

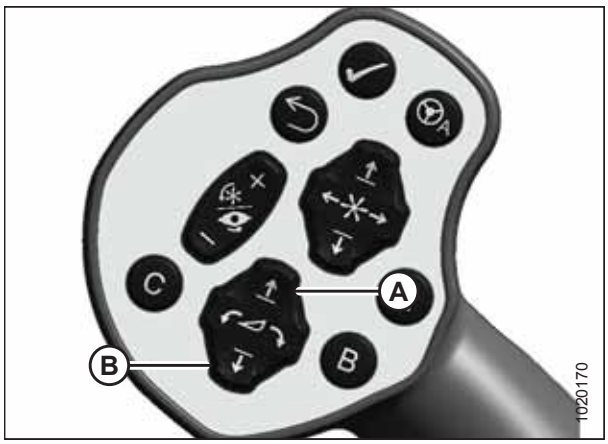

Figure 4.210: GSL

Cutting height (A) is always displayed on the Harvest Performance Tracker (HPT) screen.



Figure 4.211: HPT Display

4.6.6 Double Windrowing

The Double Windrow Attachment (DWA) allows two conditioned windrows from an A40DX Auger Header or R85 Rotary Disc Header to be laid down side-by-side for faster pickup.

Conditioned crop is deposited onto the side delivery draper and delivered beside the windrower.

Raising the side delivery system shuts off the draper and allows the crop to be deposited between the windrower wheels—as it would be without the side delivery system.

Refer to the MacDon Double Windrow Attachment (DWA) for M1 Series Windrowers Manual for complete setup, operating, and maintenance instructions. The manual is shipped with the DWA kit.

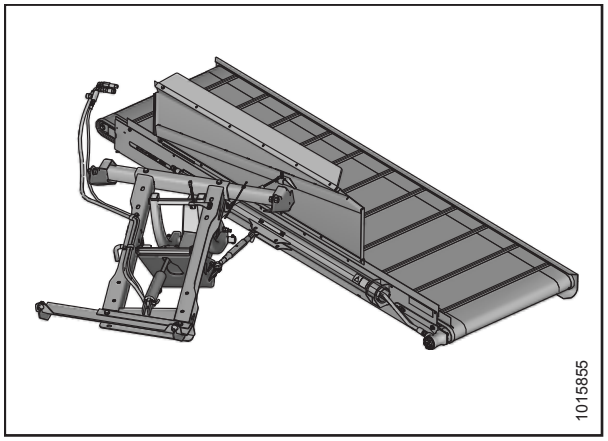

Figure 4.212: DWA

Double Windrow Attachment Deck Position

1. Raise and lower the Double Windrow Attachment (DWA) deck with REEL UP (A) and REEL DOWN (B) switches on ground speed lever (GSL), or on the operator's console.

   NOTE:

   This can also be done with the One-Touch-Return. Refer to *One-Touch-Return Buttons (A, B, C), page 73*.



Figure 4.213: GSL

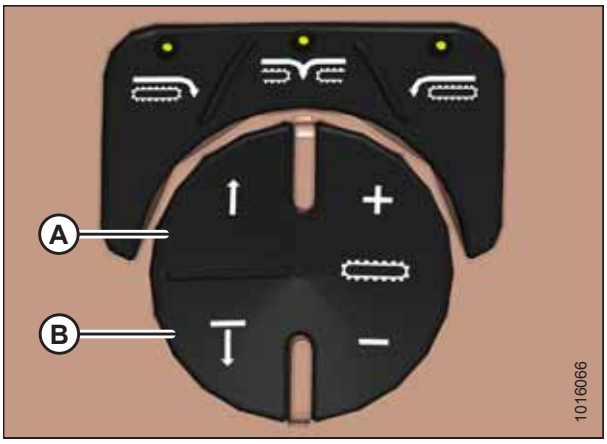

Figure 4.214: Operator's Console Draper Controls

Double Windrow Attachment Conveyor Speed

The Double Windrow Attachment (DWA) conveyor speed is adjustable from the operator's console. Press button (A) to increase the speed or button (B) to decrease the speed.

NOTE:

When DWA is attached, the conveyor speed adjustment buttons also control header draper speeds.

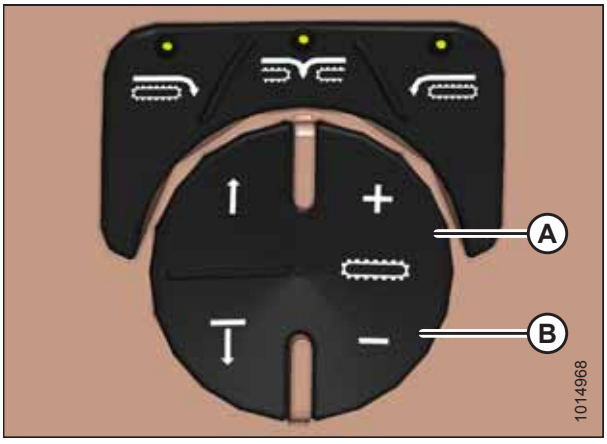

Figure 4.215: Operator's Console

The DWA conveyor speed is also adjustable with the reel fore-aft switches on the GSL. Press switch (A) to increase speed or switch (B) to decrease speed.

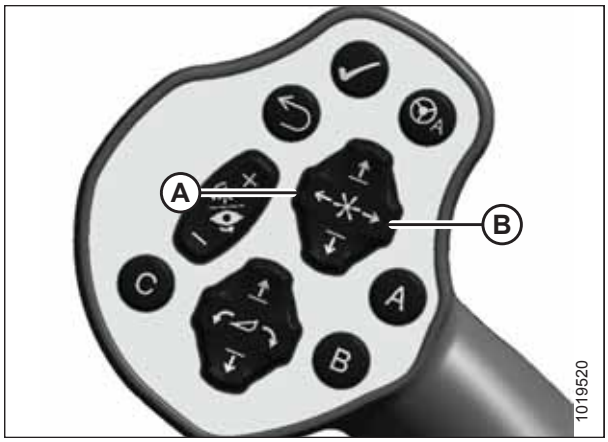

Figure 4.216: GSL

4.6.7 One-Touch-Return

One-Touch-Return allows you to choose and apply three presets to the A, B, and C keys (A) on the ground speed lever (GSL).

One-Touch-Return presets can be set to control variables such as height, tilt, reel position, and speeds. Refer to *One-Touch-Return Buttons (A, B, C), page 73*.



Figure 4.217: GSL

4.6.8 Adjusting Header Raise and Lower Rates

To adjust header raise and lower rates, follow these steps:

1. On the Harvest Performance Tracker (HPT) press soft key 5 (A) to display the Header Lower/Raise menu.
2. Use the HPT scroll knob (B) or the ground speed lever (GSL) scroll wheel (not shown) to place the red cursor over the SETTINGS icon (C).
3. Press the HPT scroll knob (B) or the GSL SELECT button (not shown) to select the SETTINGS icon (C).

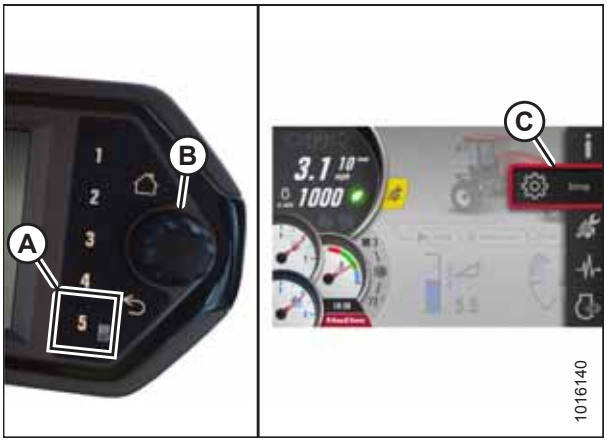

Figure 4.218: Opening the Main Menu

4. Use the HPT scroll knob or the GSL scroll wheel to move the red cursor to the HEADER SETTINGS icon (A).
5. Press the HPT scroll knob or GSL SELECT button to display the SET-UP HEADER menu list.

   NOTE:

   The F4 shortcut button on the operator's console also will display the SET-UP HEADER menu list.
6. Scroll to the HEADER LOWER/RAISE menu item (B), and press SELECT. A menu for adjusting header lower/raise rates opens with the last header setting as the default starting point.

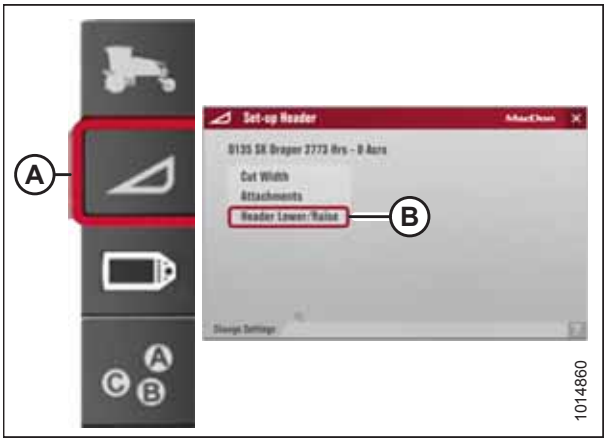

Figure 4.219: Header Settings Icon and Set-Up Header Menu List

Figure 4.220: Header Raise and Lower Rates

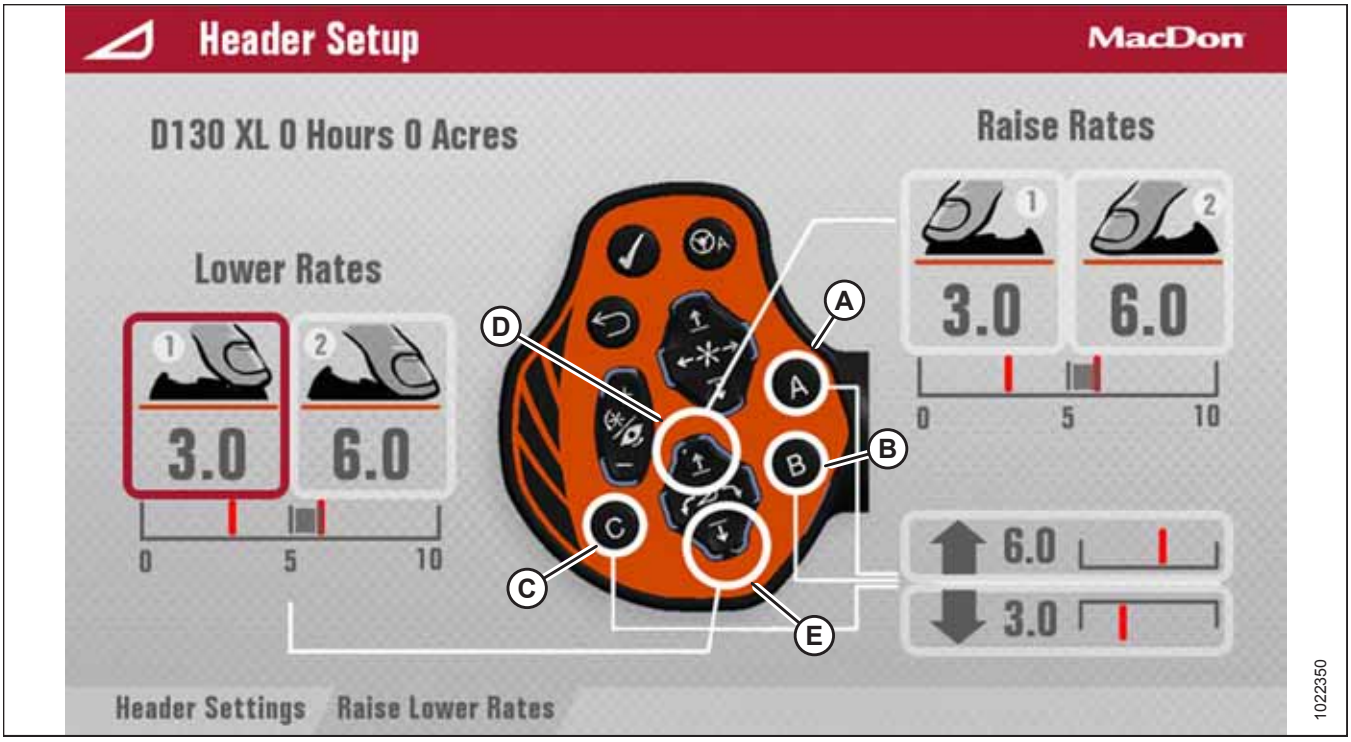

7. The header lift/lower rate is adjustable in two stages. A half button press adjusts stage one: the slow rate, and a full button press adjusts stage two: the fast rate.

   Scroll through the RAISE FIRST/RAISE SECOND and LOWER FIRST/LOWER SECOND menu selections, and program the following GSL buttons:

   - HEADER RAISE (D): half press adjusts first (slow rate) stage, full press adjusts second (fast rate) stage
   - HEADER LOWER (E): half press adjusts first (slow rate) stage, full press adjusts second (fast rate) stage
   - ONE-TOUCH-RETURN buttons (A), (B), and (C): trigger header raise or lower presets.

4.7 Operating with D1X or D1XL Series Draper Header

For attachment instructions, refer to *Attaching a D1X or D1XL Series Draper Header, page 155*.

4.7.1 Header Position

Refer to *4.6 Operating a Header, page 193* for procedures for controlling header height, header tilt, and float.

4.7.2 Adjusting Reel Fore-Aft Position

The reel fore-aft position is adjusted with the multi-function switches on the ground speed lever (GSL).

Press and hold the switch for the desired movement; FORWARD (A) or AFT (B).

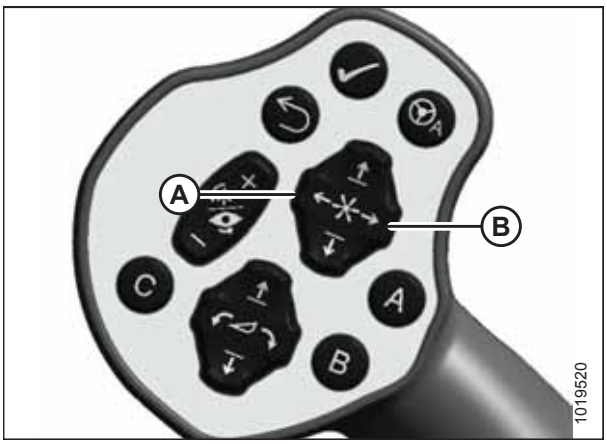

Figure 4.221: Ground Speed Lever

4.7.3 Adjusting Reel Height

Press and hold the switch for the desired movement of the reel; UP (A) or DOWN (B).

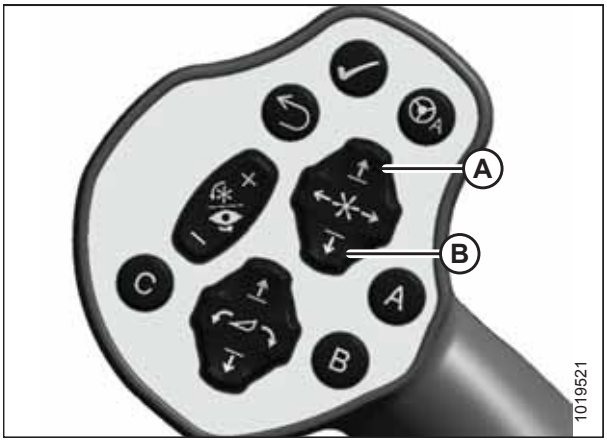

Figure 4.222: Ground Speed Lever

4.7.4 Leveling the Header

The windrower lift linkages are factory-set to provide the proper header level, and should not normally require adjustment. If leveling is required, follow these steps:

WARNING

To avoid bodily injury or death from unexpected startup of the machine, always stop the engine and remove the key from the ignition before leaving the operator's seat for any reason.

1. Press rotary scroll knob (A) on Harvest Performance Tracker (HPT) to display the QuickMenu system.
2. Rotate scroll knob (A) to highlight the header float symbol (B) and press scroll knob to select. The SET-UP FLOAT page displays.

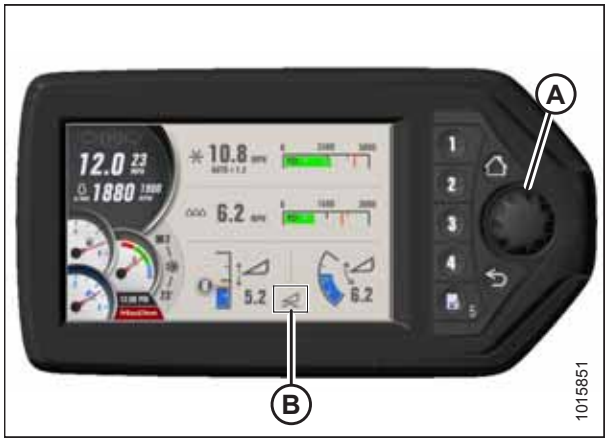

Figure 4.223: HPT Display

3. Press soft key 3 (A) to remove float.



Figure 4.224: HPT Display

4. Park the windrower on level ground.
5. Press the header raise button (A) on the ground speed lever (GSL). When the header reaches maximum height, continue to hold the header raise button momentarily to allow the lift cylinders to rephase.



Figure 4.225: GSL

6. Lower the header to approximately 150 mm (6 in.) off the ground.
7. Ensure that channel (A) is against link (B).
8. Stop the engine and remove the key from the ignition.
9. Measure the distance to the ground at both ends of the header to determine if the header is level.

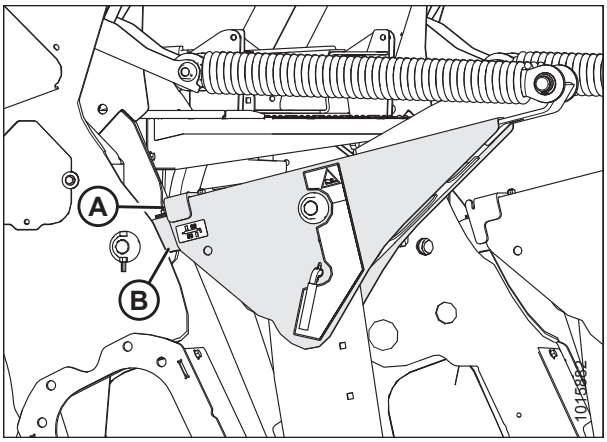

Figure 4.226: Lift Linkage

CAUTION

Check to be sure all bystanders have cleared the area.

10. If adjustment is necessary, start engine and resume float. Lower the header onto the ground until channel (A) lifts away from the link (B) on both sides.
11. Turn off the engine and remove the key.

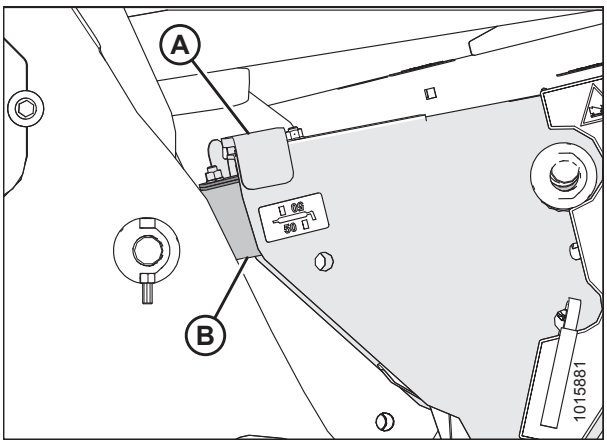

Figure 4.227: Lift Linkage

12. On the side that is higher, remove nut, washer, and bolt (A) that attaches shims (B) to the linkage.
13. Remove one or both of the shims (B) and reinstall the hardware (A).

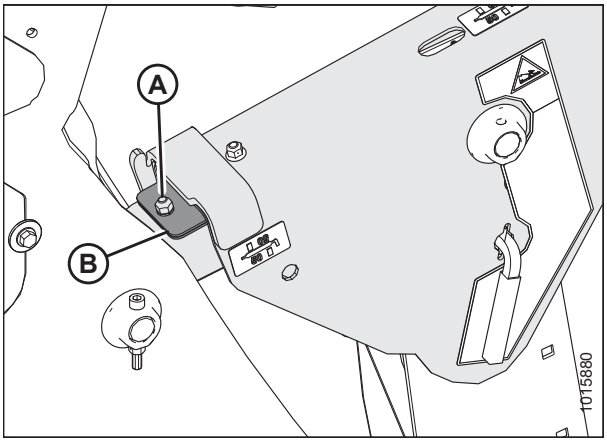

Figure 4.228: Lift Linkage Shims

CAUTION

Check to be sure all bystanders have cleared the area.

14. Repeat Step *5, page 208* to Step *9, page 209* to rephase the cylinders and check the header level.
15. If additional adjustment is required, repeat Step *10, page 209* to Step *13, page 209*, and install one of the removed shims on the opposite linkage.
16. Reset the header float. Refer to *Setting the Float, page 196*.

NOTE:

Additional shims are available from your Dealer.

4.7.5 Adjusting Reel Speed

Reel speed is displayed in either rpm, mph, or km/h (depending on the global units selection). The default reel speed is 60 rpm and can be set to auto or manual mode.

- AUTO mode: Minimum reel speed and operating reel speed differential relative to ground speed are set, and reel speed is maintained relative to ground speed. Refer to *Setting Reel Speed in Auto Mode, page 210*.
- MANUAL mode: Reel speed is set and is maintained regardless of ground speed. Refer to *Setting Reel Speed in Manual Mode, page 212*.

NOTE:

Both speed modes work with the One-Touch-Return feature. For example, button A on the GSL can be set for MANUAL mode and button B can be set for AUTO mode. Refer to *One-Touch-Return Buttons (A, B, C), page 73*.

Setting Reel Speed in Auto Mode

This adjustment requires the header to be in operation.

1. If RUN SCREEN 1 is not already displayed, press soft key 1 (A) on the Harvest Performance Tracker (HPT) to display draper RUN SCREEN 1.



Figure 4.229: Header Run Screen 1

2. Press the scroll knob (A) on the Harvest Performance Tracker (HPT) or the SELECT button (B) on the ground speed lever (GSL) to display the QuickMenu system.

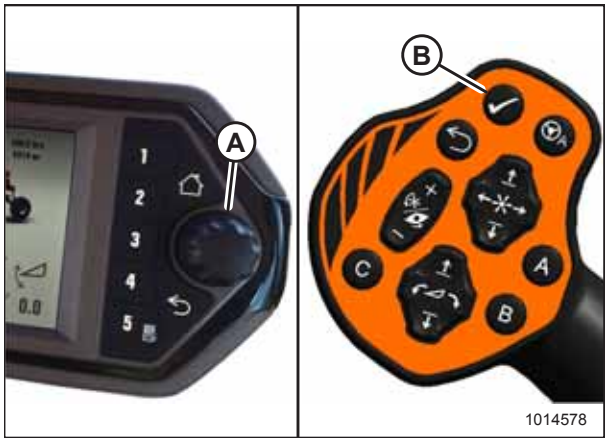

Figure 4.230: HPT Scroll Knob and GSL Select Button

3. Turn knob to scroll to REEL setting (A) on the QuickMenu, and press knob to select it. The next page opens.

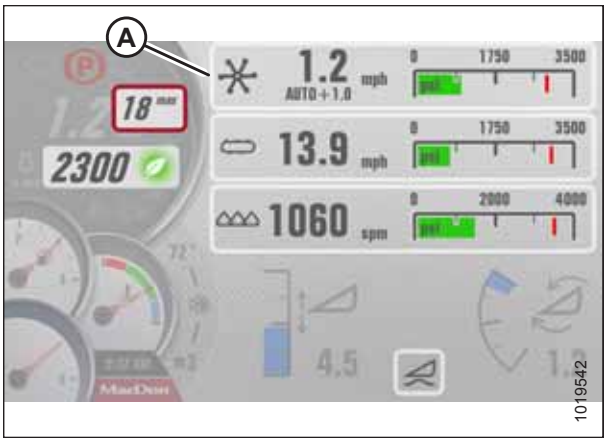

Figure 4.231: Header QuickMenu

4. Scroll to mode field (A) and select it.
5. Scroll in pop-up window to AUTO and select it.

   NOTE:

   In AUTO mode, the speed is displayed in km/h or mph (B) which cannot be changed.

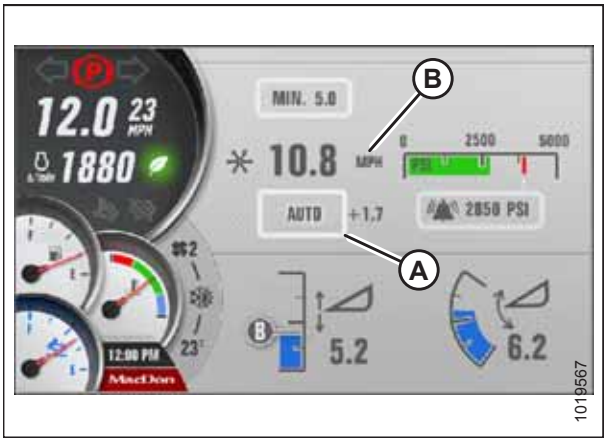

Figure 4.232: Draper Header Reel Page

6. Scroll to and select the MINIMUM REEL SPEED setting (A) (this setting is grayed out in manual mode).
7. Turn scroll knob to adjust reel minimum speed to 1.6–8 km/h (1–5 mph) with 5 km/h (3.0 mph) as the default. Press scroll knob to select desired setting.
8. Scroll to INDEX value (C) and select it.
9. Turn scroll knob to set index value. The index range is +/- 8 km/h (5 mph) (zero, that is equal to ground speed, is the default). Press scroll knob to select desired setting.

   NOTE:

   The reel operates at reel minimum speed when the ground speed is less than the set minimum speed. Minimum reel speed is displayed (A) and MIN will replace the AUTO (B) +1.7 (C).

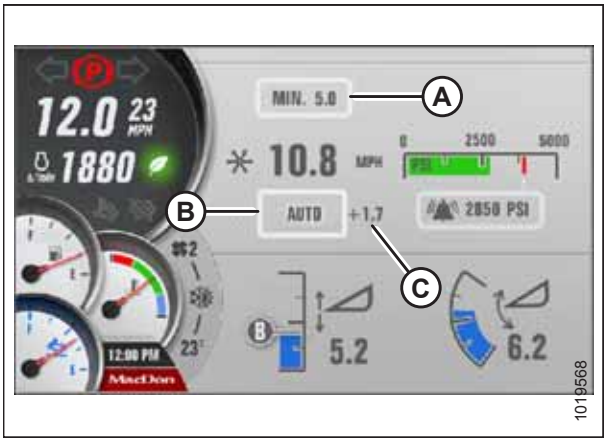

Figure 4.233: Draper Header Reel Page

Setting Reel Speed in Manual Mode

This adjustment requires the header to be in operation.

1. If RUN SCREEN 1 is not already displayed, press soft key 1 (A) on the Harvest Performance Tracker (HPT) to display draper RUN SCREEN 1.



Figure 4.234: Header Run Screen 1

2. Press the scroll knob (A) or the SELECT button (B) on the ground speed lever (GSL) to display the QUICKMENU PAGE.

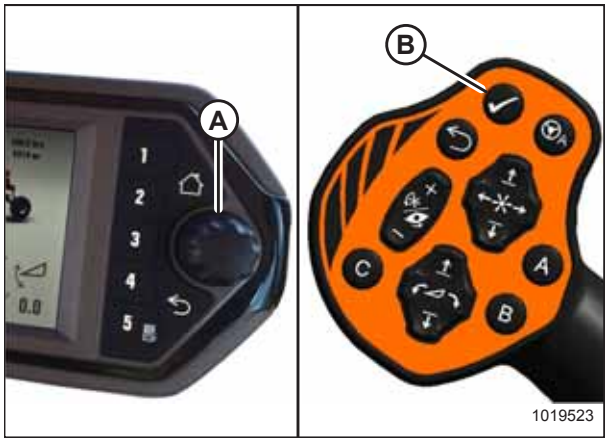

Figure 4.235: HPT and GSL

3. Turn knob to scroll to REEL setting (A) on QuickMenu, and press knob to select it. The next page opens.

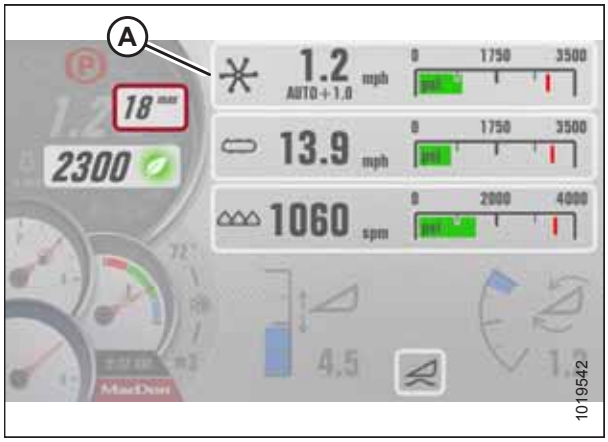

Figure 4.236: Header QuickMenu

4. Turn scroll knob to mode window (A) and press scroll knob to select it.
5. Scroll in pop-up window to MANUAL and press scroll knob to select it.
6. Scroll to units (B) and select desired unit (rpm, mph, or km/h).
7. Proceed to next step to adjust reel speed (C).



Figure 4.237: Draper Header Reel Page

8. Use reel speed switches (A) on GSL to set reel speed. The desired speed increases 1 rpm (0.1 mph or 0.2 km/h if in mph/km/h) per momentary press, or continuous scrolling if switch is pressed and held.

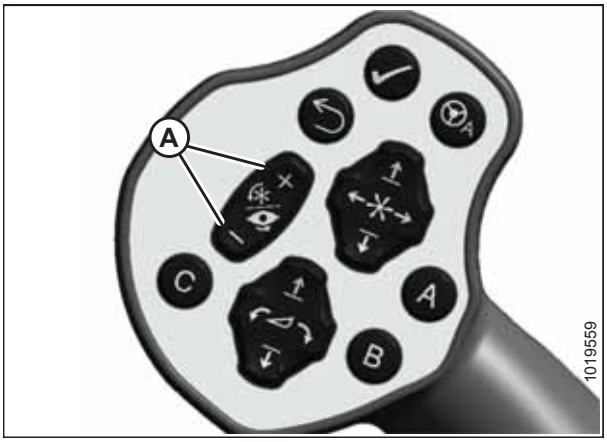

Figure 4.238: GSL

Adjusting Reel Alarm Pressure

Adjusting the reel alarm allows the operator to set an alert to inform them that the reel is operating at a desired pressure. A lower setting will cause the alarm to be set off more often; a higher setting will allow the alarm to be set off less frequently. This adjustment requires the header to be in operation.

1. If RUN SCREEN 1 is not already displayed, press soft key 1 (A) on the Harvest Performance Tracker (HPT) to display draper RUN SCREEN 1.



Figure 4.239: Header Run Screen 1

2. Press the scroll knob (A) on the Harvest Performance Tracker (HPT) or the SELECT button (B) on the ground speed lever (GSL) to display the QuickMenu system.

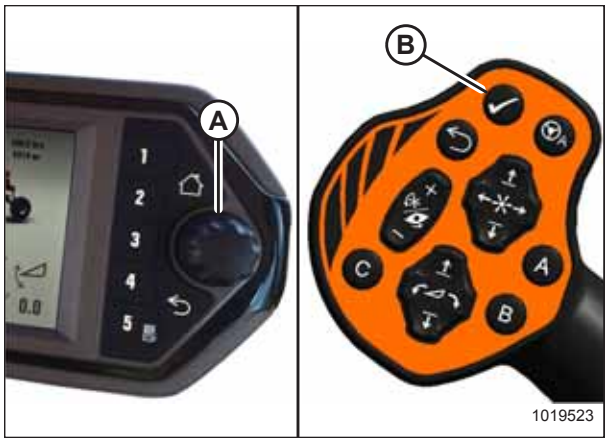

Figure 4.240: HPT Scroll Knob and GSL Select Button

3. Turn knob to scroll to REEL setting (A) on QuickMenu, and press knob to select it. The next page opens.

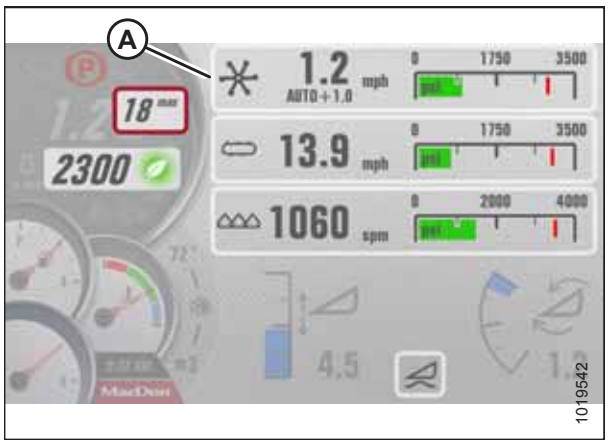

Figure 4.241: Header QuickMenu

4. Turn scroll knob to highlight reel pressure ALARM (A), and press knob to select it.
5. Turn knob to change the ALARM set-point in window (A). Scrolling past the highest setting turns the alarm off. When the alarm point is off, the digital value is replaced with three dashed lines.
6. Adjust reel alarm pressure set-point to desired value, and press knob to select it. Factory setting is 19,995 kpa (2900 psi).

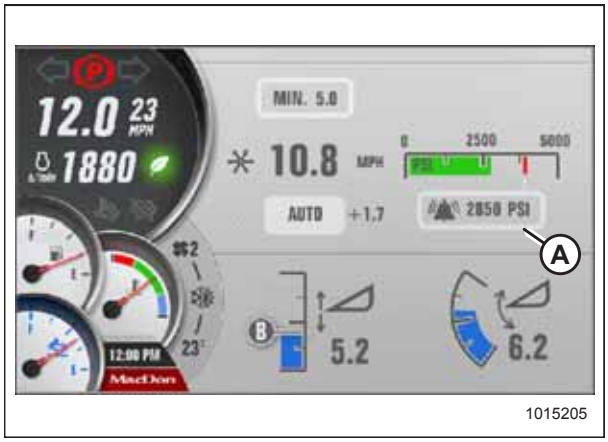

Figure 4.242: Draper Header Reel Page

4.7.6 Adjusting Draper Speed

Draper speed is displayed in mph or km/h (depending on the global units selection); the default is rpm, and can be set to auto or manual mode.

- AUTO mode: Draper speed is maintained relative to ground speed. Refer to *Setting Draper Speed in Auto Mode, page 215*.
- MANUAL mode: Draper speed is manually set and is maintained independently of ground speed. Refer to *Setting Draper Speed in Manual Mode, page 217*.

NOTE:

Both speed modes work with the One-Touch-Return feature. For example, button A on the GSL can be set for MANUAL mode and button B can be set for AUTO mode. Refer to *One-Touch-Return Buttons (A, B, C), page 73*.

Setting Draper Speed in Auto Mode

This adjustment requires the header to be in operation.

1. If RUN SCREEN 1 is not already displayed, press soft key 1 (A) on the Harvest Performance Tracker (HPT) to display draper RUN SCREEN 1.



Figure 4.243: Header Run Screen 1

2. Press the scroll knob (A) on the Harvest Performance Tracker (HPT) or the SELECT button (B) on the ground speed lever (GSL) while in any run screen to display the QuickMenu system.

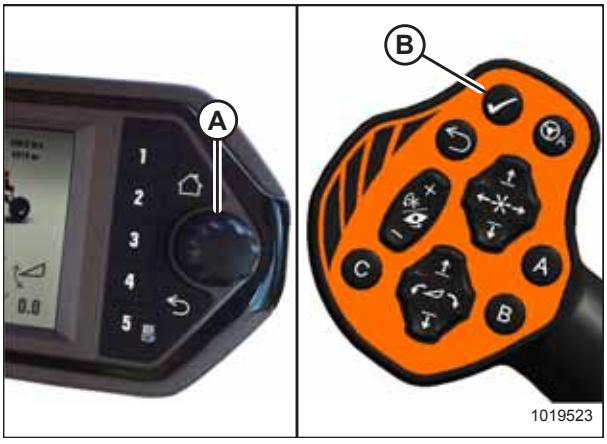

Figure 4.244: HPT Scroll Knob and GSL Select Button

3. Turn knob and scroll to the DRAPER setting (A) on QuickMenu, and press knob to select it. The next page opens.



Figure 4.245: Header QuickMenu

4. Scroll to mode window (A) and select it.
5. Scroll in pop-up window to AUTO and select it.

   NOTE:

   In AUTO mode, the speed is displayed in km/h or mph (B).

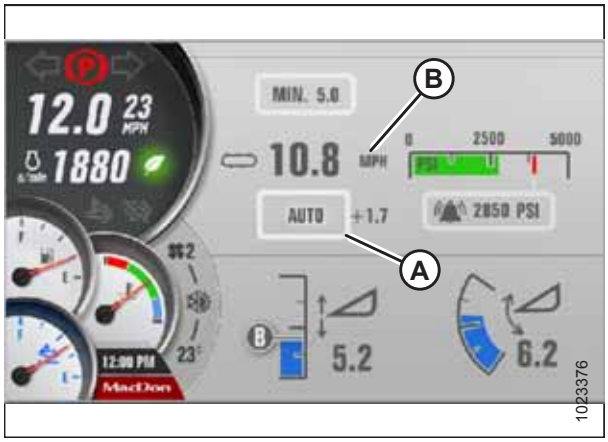

Figure 4.246: Draper Header Draper Page

6. Scroll to and select the MINIMUM DRAPER SPEED setting (A) (this setting is grayed out in manual mode).
7. Turn scroll knob to adjust draper minimum speed to 1.6–8 km/h (1–5 mph) with 5 km/h (3.0 mph) as the default). Press knob to select desired setting.
8. Scroll to INDEX value (C) and select it.
9. Turn scroll knob to set index value. The index range is +/- 8 km/h (5 mph) (zero, i.e. equal to ground speed, is the default). Press knob to select desired setting.

   NOTE:

   The draper operates at MINIMUM SPEED when the ground speed + the reel index value is less than the set minimum speed. Minimum reel speed is displayed (A) and MIN will replace the AUTO +1.7 (B).

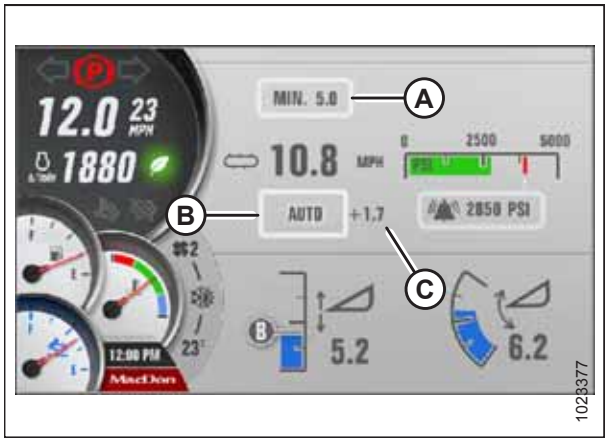

Figure 4.247: Draper Header Draper Page

Setting Draper Speed in Manual Mode

1. If RUN SCREEN 1 is not already displayed, press soft key 1 (A) on the Harvest Performance Tracker (HPT) to display draper RUN SCREEN 1.



Figure 4.248: Header Run Screen 1

2. Press the scroll knob (A) on the Harvest Performance Tracker (HPT) or the SELECT button (B) on the ground speed lever (GSL) to display the QuickMenu page.

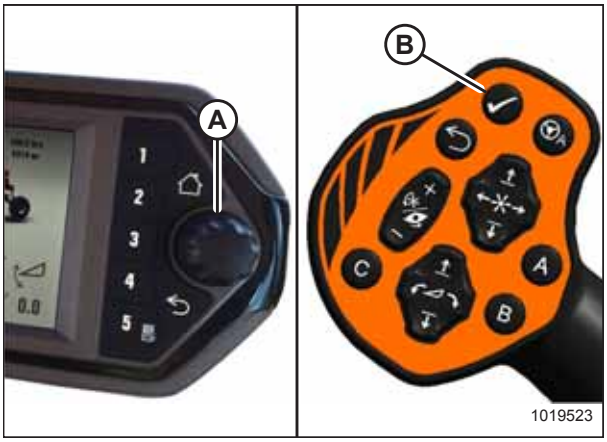

Figure 4.249: HPT Scroll Knob and GSL Select Button

3. Turn knob to scroll to DRAPER setting (A) on QuickMenu, and press knob to select it. The next page opens.

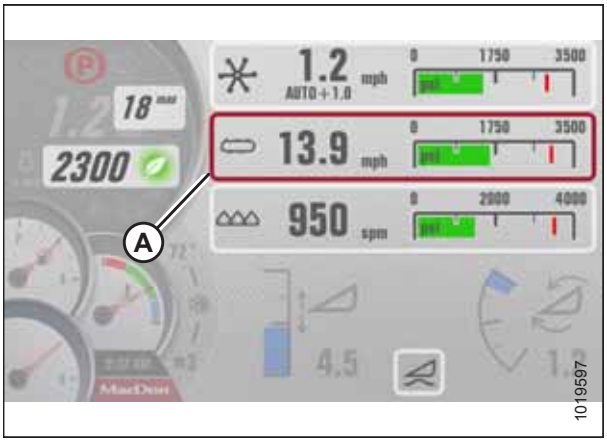

Figure 4.250: Draper Header QuickMenu

4. Turn scroll knob to mode window and press scroll knob to select it.
5. Scroll in the pop-up window to MANUAL (A) and press scroll knob to select it.



Figure 4.251: Draper Header Draper Page

6. Set draper speed with console controls as follows:
   a. Press and quickly release DRAPER SPEED switch (A) to increase draper speed in 0.2 km/h (0.1 mph) intervals.
   b. Press and hold DRAPER SPEED switch (A) to increase draper speed in 2 km/h (1 mph) intervals.
   c. Similarly decrease draper speed with switch (B).

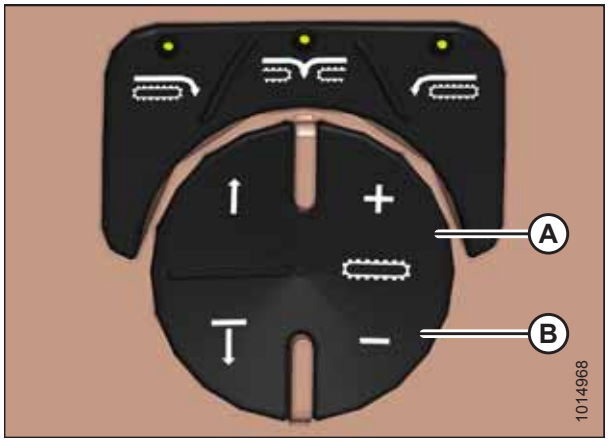

Figure 4.252: Operator's Console Draper Controls

Adjusting Draper Alarm Pressure

Adjusting the draper alarm allows the operator to set an alert to inform them that the draper is operating at a desired pressure. A lower setting will cause the alarm to be set off more often; a higher setting will allow the alarm to be set off less frequently. This adjustment requires the header to be in operation.

1. If RUN SCREEN 1 is not already displayed, press soft key 1 (A) on the Harvest Performance Tracker (HPT) to display draper RUN SCREEN 1.



Figure 4.253: Header Run Screen 1

2. Press the scroll knob (A) on the Harvest Performance Tracker (HPT) or the SELECT button (B) on the ground speed lever (GSL) to display the QuickMenu page.

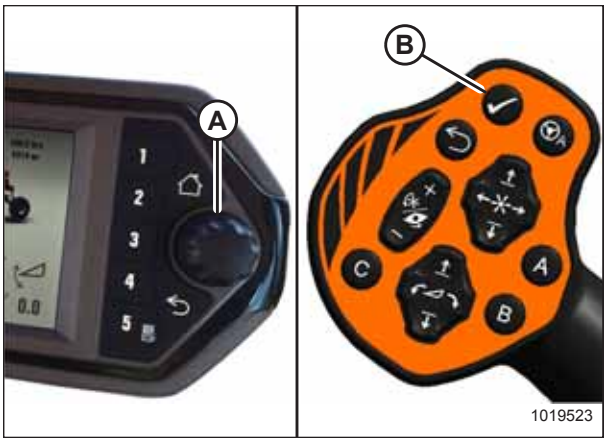

Figure 4.254: HPT Scroll Knob and GSL Select Button

3. Turn knob to scroll to DRAPER setting (A) on QuickMenu, and press knob to select it. The next page opens.



Figure 4.255: Draper Header QuickMenu

4. Scroll to the DEFAULT DRAPER ALARM PRESSURE (A), and select it.
5. Change the alarm set-point by scrolling. Scrolling past the highest setting turns off the alarm. When the alarm point is off, the digital value is replaced with three dashed lines.
6. Adjust draper alarm pressure set-point to desired value, and press knob to select it. Factory setting is 19,995 kpa (2900 psi).



Figure 4.256: Draper Header Draper Page

Draper Slip Warning

If the left or right draper idler roller begins to slip, a warning tone will sound and one of the following messages (A) will appear on the Harvest Performance Tracker (HPT) screen:

- Left draper slipping. Disengage header.
- Right draper slipping. Disengage header.

The Operator cannot cancel the message.

NOTE:

A slipping draper can severely damage the draper belts. Slippage is typically caused by debris inside the draper.

NOTE:

A draper slip sensor failure will disable the sensor and a fault will appear on the Harvest Performance Tracker (HPT) screen. Contact your MacDon Dealer for service.

NOTE:

Draper slip warning is disabled when a double draper drive kit is installed.

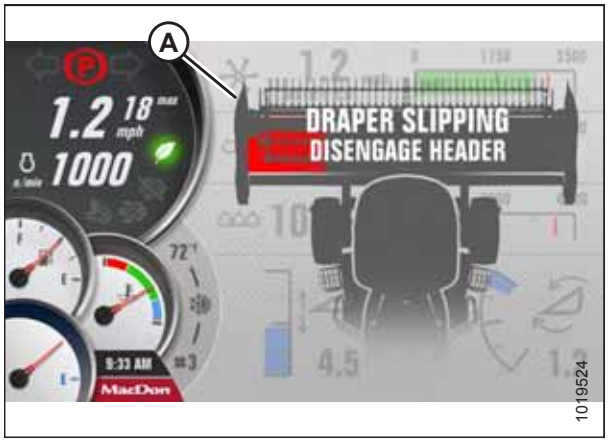

Figure 4.257: Draper Slip Warning

4.7.7 Knife Speed

The ideal cutting speed of the knife should achieve a clean cut. Crop types and conditions usually influence the knife and forward speeds.

Table 4.4 Knife Speed

Header Description		Knife Speed			
Type	Size m (ft.)	Minimum		Maximum	
		rpm[6]	spm[7]	rpm[6]	spm[7]
Draper with double knife	4.6 (15)	750	1500	950	1900
Draper with double knife	6.1 (20)	700	1400	850	1700
Draper with double knife	7.6 (25)	700	1400	850	1700
Draper with double knife	9.1 (30)	600	1200	800	1600
Draper with double knife	10.7 (35)	600	1200	700	1400
Draper with double knife	12.2 (40)	550	1100	700	1400
Draper with double knife	13.7 (45)	550	1100	700	1400

When the header is first attached to the windrower, the Harvest Performance Tracker (HPT) receives a code from the header that determines the knife speed range and the minimum speed.

6. Revolutions per minute is the speed of knife drive box pulley
7. Strokes per minute of knife (rpm x 2)

The desired speed can be programmed and stored in the HPT so the knife will operate at the original set-point after the header is detached and reattached to the windrower.

Refer to the header operator's manual for the suggested knife speed for a variety of crops and conditions.

NOTE:

The knife speed cannot be programmed outside the range specified for each header.

Setting Knife Speed

Knife speed is displayed in strokes per minute (spm).

CAUTION

Check to be sure all bystanders have cleared the area.

1. If RUN SCREEN 1 is not already displayed, press soft key 1 (A) on the Harvest Performance Tracker (HPT) to display draper RUN SCREEN 1.



Figure 4.258: Header Run Screen 1

2. Press the scroll knob (A) on the HPT or the SELECT button (B) on the ground speed lever (GSL) to display the QuickMenu page.

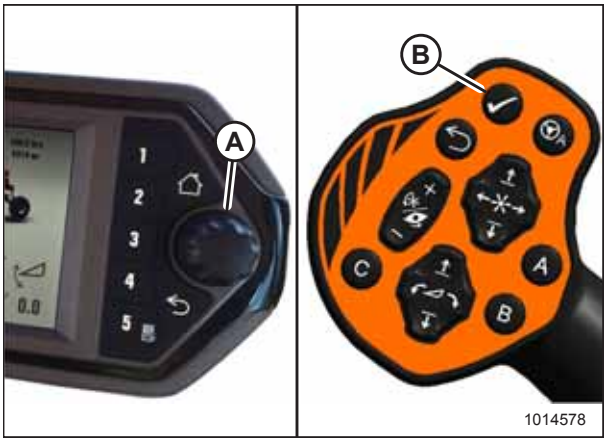

Figure 4.259: HPT Scroll Knob and GSL Select Button

3. Scroll to the KNIFE setting (A) on the QuickMenu page, and select it.

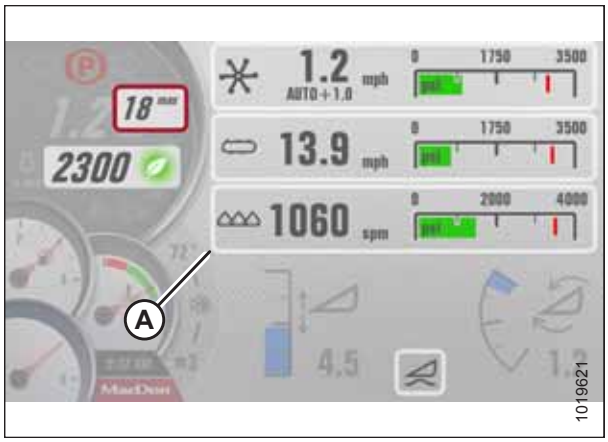

Figure 4.260: Draper Header QuickMenu

4. Scroll to and select the KNIFE SPEED setting (A).
5. Adjust knife speed using the HPT scroll knob.
6. Press the scroll knob to select.



Figure 4.261: Setting Knife Speed

Adjusting Knife Alarm Pressure – Draper Header

Adjusting the knife alarm allows the operator to set an alert to inform them that the knife is operating at a desired pressure. A lower setting will cause the alarm to be set off more often; a higher setting will allow the alarm to be set off less frequently. This adjustment requires the header to be in operation.

1. If RUN SCREEN 1 is not already displayed, press soft key 1 (A) on the Harvest Performance Tracker (HPT) to display draper RUN SCREEN 1.



Figure 4.262: Header Run Screen 1

2. Press the scroll knob (A) on the HPT, or the SELECT button (B) on the ground speed lever (GSL) to display the QuickMenu page.

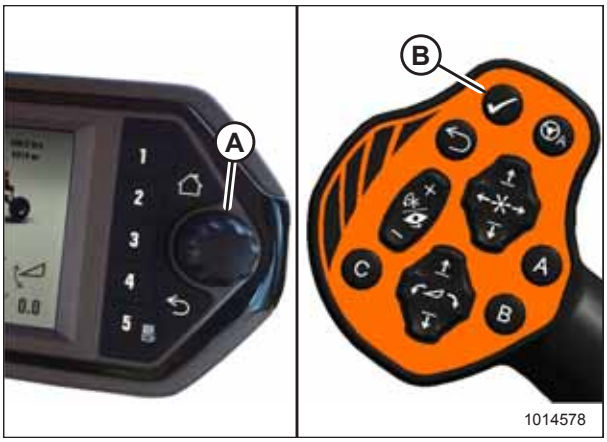

Figure 4.263: HPT Scroll Knob and GSL Select Button

3. Turn knob to scroll to the KNIFE setting (A) on the QuickMenu page, and press knob to select it.

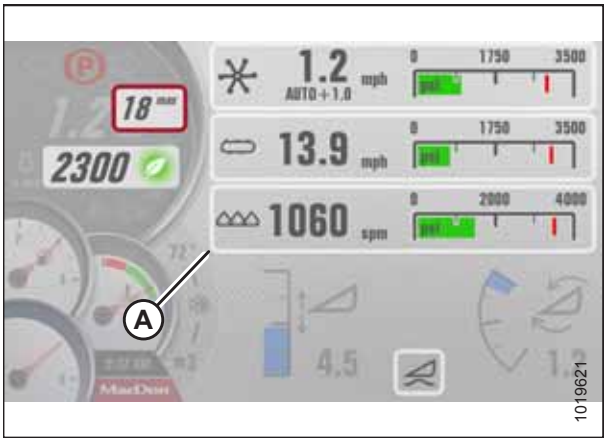

Figure 4.264: Draper Header QuickMenu

4. Scroll to the knife alarm pressure setting (A), and press knob to select it.
5. Turn knob to change the ALARM set-point in window (A). Scrolling past the highest setting turns the alarm off. When the alarm point is off, the digital value is replaced with three dashed lines.
6. Adjust knife alarm pressure set-point to desired value, and press knob to select it. Factory setting is 23,442 kpa (3400 psi).



Figure 4.265: Adjusting Knife Alarm Pressure

Adjusting Knife Speed Alarm

The knife speed alarm informs the operator when knife speed is outside the desired range. A lower setting will cause the alarm to be set off less often; a higher setting will cause the alarm to be set off more frequently. The header must be in operation for this adjustment.

1. If RUN SCREEN 1 is not already displayed, press soft key 1 (A) on the Harvest Performance Tracker (HPT) to display draper RUN SCREEN 1.



Figure 4.266: Header Run Screen 1

2. Press the scroll knob (A) on the HPT or the SELECT button (B) on the ground speed lever (GSL) to display the QuickMenu system.

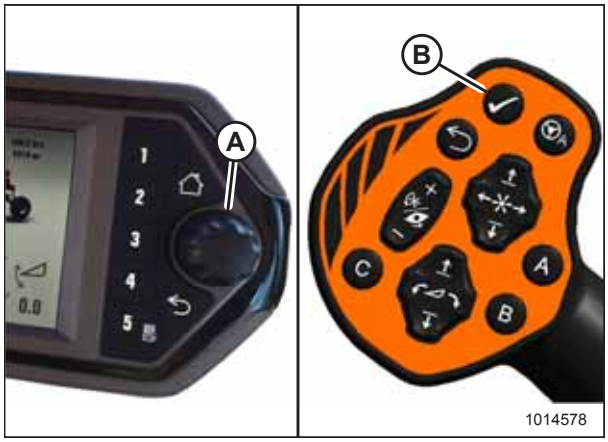

Figure 4.267: HPT Scroll Knob and GSL Select Button

3. Turn knob to scroll to the KNIFE setting (A) on the QuickMenu page, and press knob to select it.

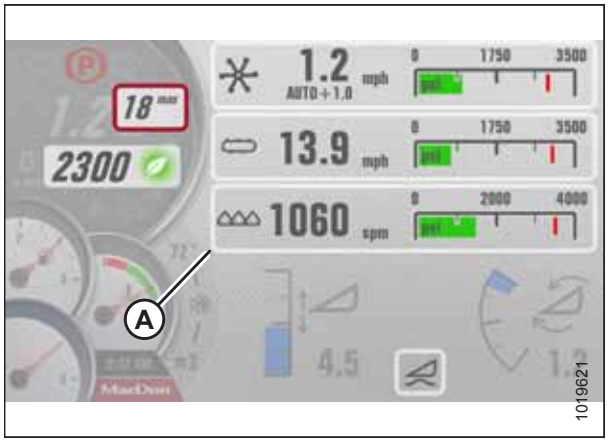

Figure 4.268: Draper Header QuickMenu

4. Scroll to and select the KNIFE SPEED ALARM setting (A).
5. Turn scroll knob to adjust knife speed alarm as desired. Default is 70% and minimum value is 50%. For example, at a setting of 75%, an alarm will sound when knife speed decreases to 75% of preset knife speed due to overload.



Figure 4.269: Adjusting Knife Speed Alarm

4.7.8 Deck Shift Control

When connected to a draper header with the deck shift option, hydraulic deck shift control allows you to select the deck position and draper rotation of the header from the operator's station. Deck shift allows you to select crop delivery from the left side, center, or right side of the header.

Shifting Decks

CAUTION

Check to be sure all bystanders have cleared the area.

Shift decks as follows:

1. Engage header by pushing and holding the HEADER ENGAGE switch (A) down, and pulling up on collar (B).

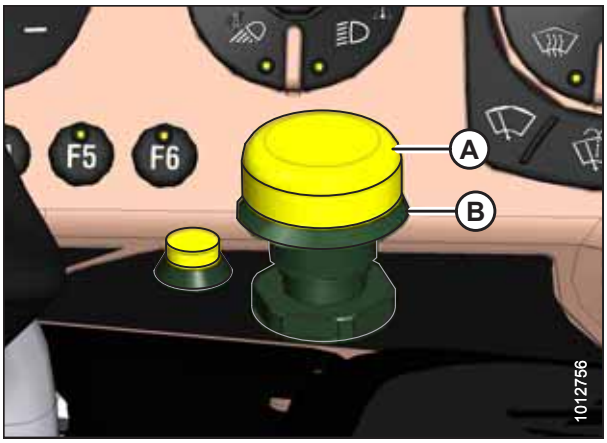

Figure 4.270: Header Engage Switch

2. Push the HEADER DECK SHIFT switch to the desired delivery position. Deck(s) will move and direction of drapers will change accordingly.

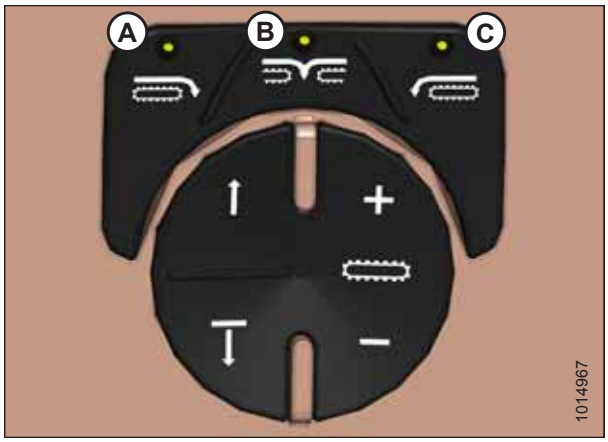

Figure 4.271: Header Deck Shift Switches

A - Right-Side Delivery **B - Center Delivery**
C - Left-Side Delivery

Setting Float Options with Deck Shift

Header float should be set for each deck position. To program a float setting for each of the deck shift positions, follow these steps:

CAUTION

Check to be sure all bystanders have cleared the area.

1. Start the engine, and use the HEADER TILT switches (A) and (B) on the ground speed lever (GSL) to set header tilt to the MID-RANGE position.

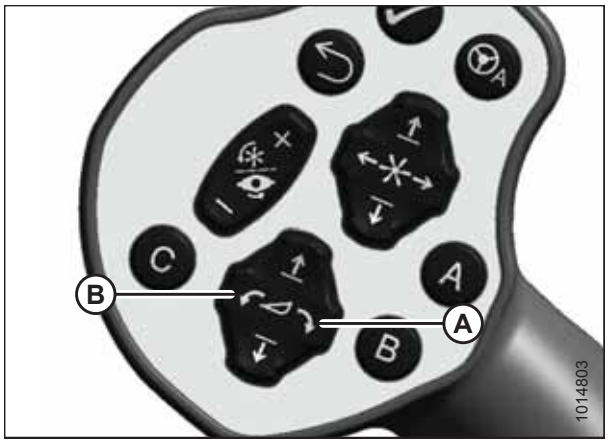

Figure 4.272: GSL

2. Engage header by pushing and holding the HEADER ENGAGE switch (A) down, and pulling up on the collar (B).

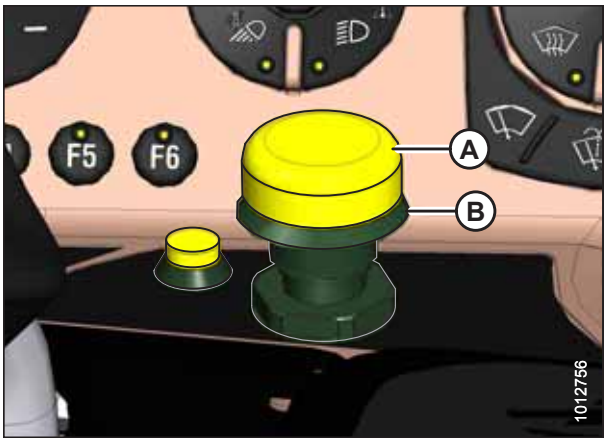

Figure 4.273: Header Engage Switch

3. Select one of the following deck positions using the DECK SHIFT switches on the operator's console:
   - Right-side delivery (A)
   - Center delivery (B)
   - Left-side delivery (C)

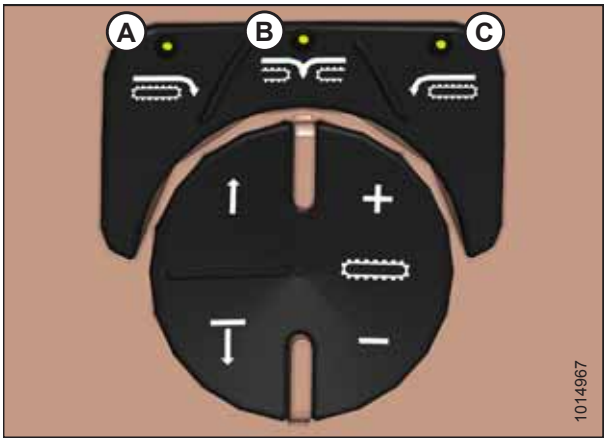

Figure 4.274: Header Deck Shift Switches

4. After deck(s) have stopped moving, disengage header with HEADER ENGAGE switch (A).
5. Refer to *Setting the Float, page 196* to adjust the float setting for the selected deck position.
6. Repeat steps for the other deck positions.

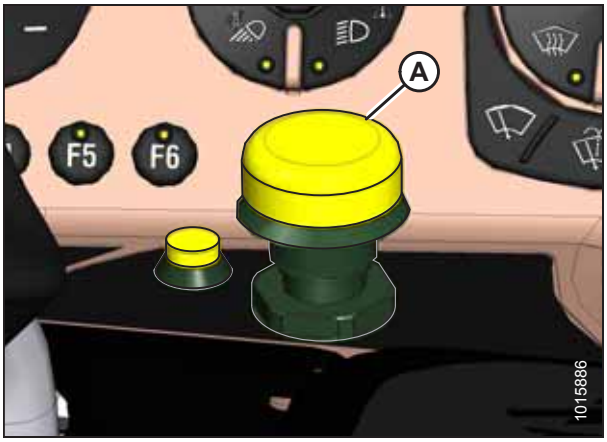

Figure 4.275: Header Engage Switch

4.7.9 Draper Header Run Screens

Two draper header specific run screens are viewable when operating the windrower with a draper header attached. The screens are accessed by pressing the applicable soft keys on the Harvest Performance Tracker (HPT).

1. Press soft key 1 (A) to access RUN SCREEN 1.
2. Press soft key 2 (B) to access RUN SCREEN 2.



Figure 4.276: Harvest Performance Tracker

Run Screen 1

This is what Run Screen 1 looks like when operating a draper header.

Figure 4.277: Run Screen 1 – Draper Header Display

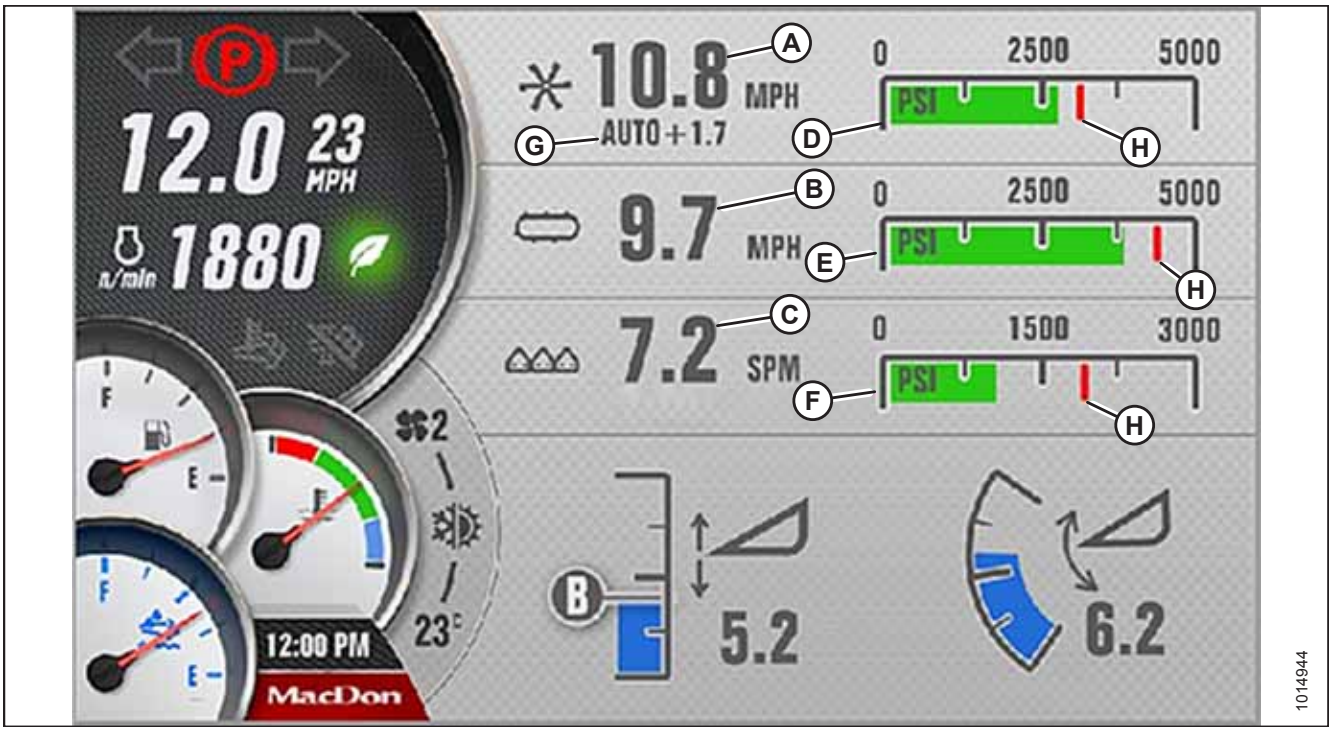

A - Reel Speed

B - Draper Speed

C - Knife Speed

D - Reel Pressure

E - Draper Pressure

F - Knife Pressure

G - Indexing

H - Alarm Point

Run Screen 2

This is what Run Screen 2 looks like when operating a draper header.

Figure 4.278: Run Screen 2 – Draper Header Display

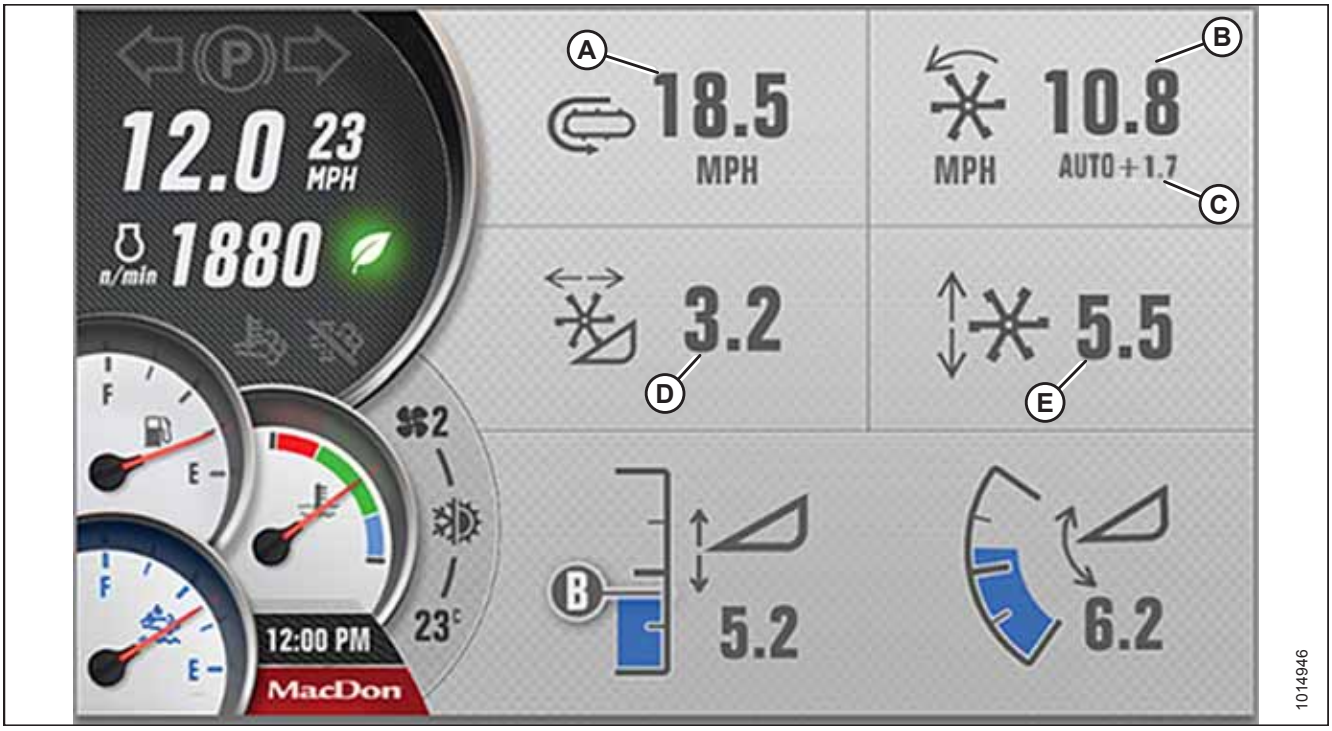

A - Draper Speed | **B - Reel Speed** | **C - Indexing**

D - Reel Fore-Aft Position | **E - Reel Height**

4.7.10 Swath Compressor

The swath compressor is a large, formed polyethylene sheet designed to mount to the underside of the windrower. The swath compressor is designed for use with D1X and D1XL Series Draper Headers cutting canola.

The swath compressor shapes the windrow and anchors it into the stubble behind the header to help prevent shelling and swath damage from wind. Excessive compression by a swath compressor or roller can increase losses from crop shelling, and may increase drying time; inadequate compression can leave a windrow prone to wind damage.

Controlling the Swath Compressor

The following topic explains how the windrower controls the swath compressor, and describes the automated raise/lower functions.

CAUTION

To avoid bodily injury or death from unexpected startup of machine, always stop engine and remove key from ignition before leaving operator's seat for any reason.

Swath compressor height (A) is displayed on the Harvest Performance Tracker (HPT) with a scale from 0–10.

NOTE:

Icon (A) is displayed on the HPT when the swath compressor is activated in the attachments menu **AND** the swath compressor sensor is enabled. If icon (A) is not displayed, refer to the Swath Compressor for M1 Series Windrowers Setup, Operation, and Parts Manual.



Figure 4.279: HPT Display

Switches (A) and (B) on the operator's console are used to adjust the position (height). Releasing the switch stops the movement.

NOTE:

Each momentary press of the switch changes the value by one. Pressing and holding changes the value by one increment per second.

NOTE:

The last position set with the console switches becomes the target height. When an adjustment is made, the display shows the target value. The system immediately adjusts to attain the target position. After the last adjustment, the display shows target value for 5 seconds then reverts to the actual position.

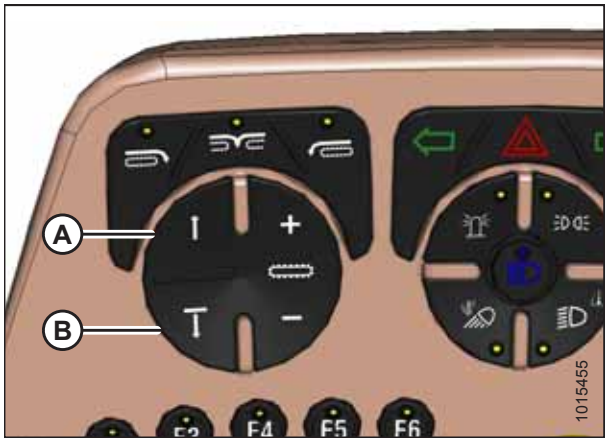

Figure 4.280: Operator's Console

Display functions

- As the swath compressor moves up or down, the target value (A) changes, the windrower icon (B) appears as an outline, and the swath compressor icon (C) flashes.
- Windrower icon (B) is solid when the target height is achieved.
- Value (A) is 0, and image (B) is an outline with the swath compressor fully raised.
- Icon (B) is not visible and automation is disabled without a header attached. Swath compressor height can still be adjusted.



Figure 4.281: HPT Display

Swath compressor automated functions: header engaged

- The swath compressor lowers to target height at a ground speed higher than 2.5 km/h (1.6 mph).
- The swath compressor fully raises as the ground speed transitions through 1.6 km/h (1 mph) during deceleration.
- The swath compressor fully raises when the header is disengaged at a ground speed higher than 1.6 km/h (1 mph).

- An IMPORTANT message to raise the swath compressor appears on the HPT accompanied by a tone when the GSL is moved out of PARK in engine-forward mode if the swath compressor is not fully raised.

Engage the swath compressor lock when the swath compressor is not in use, or when the windrower is in engine-forward mode. Refer to *Locking the Swath Compressor, page 231*.

Locking the Swath Compressor

The swath compressor lock is located on the left cab-forward side of the swath compressor frame. When engaged, the lock prevents the compressor shield from lowering.

1. Turn lock handle (A) clockwise to engage the swath compressor lock under the following conditions:
   - Swath compressor is not in use
   - Windrower is being serviced
   - Windrower is in engine-forward mode
2. Turn handle (A) counterclockwise to disengage the lock before operating the swath compressor.

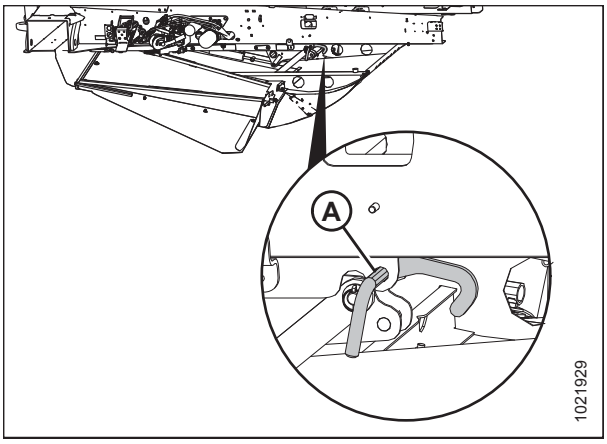

Figure 4.282: Swath Compressor Lock

4.8 Operating with an A40DX Auger Header

The M1240 is factory-equipped to run an A40DX Auger Header.

For attachment instructions, refer to *Attaching an A40DX Auger Header, page 143*.

4.8.1 Reel and Auger Speed

Reel speed is displayed in either rpm, mph, or km/h (depending on the global units selection). The default reel speed is 60 rpm, but it can be adjusted using either AUTO or MANUAL mode .

If the differential auger-reel control is enabled, you can adjust the auger speed separately from the reel speed. If the differential auger-reel control is not enabled, the reel and auger speeds are hydraulically linked and you cannot adjust the auger speed separately.

IMPORTANT:

Reel speed on an A40DX Auger Header **MUST NOT EXCEED** 85 rpm. Auger speed **MUST NOT EXCEED** 320 rpm.

- AUTO mode: Minimum reel speed and operating reel speed differential relative to ground speed are set, and reel speed is maintained relative to ground speed. Refer to *Setting Reel Speed in Auto Mode, page 232*.
- MANUAL mode: Reel speed is set and is maintained regardless of ground speed. Refer to *Setting Reel Speed in Manual Mode, page 234*.
- Differential auger-reel control engaged: Auger speed is adjusted separately from reel speed. Refer to *Setting Auger Speed, page 235*.

NOTE:

Differential auger-reel control is a standard feature on A40DX GSS Auger Headers. If you are operating an A40DX Auger Header without the grass seed option, it is optional. Order Reel Speed Control kit (MD #B6604).

Setting Reel Speed in Auto Mode

This adjustment requires the header to be in operation.

1. If RUN SCREEN 1 is not already displayed, press soft key 1 (A) on the Harvest Performance Tracker (HPT) to display auger RUN SCREEN 1.



Figure 4.283: Header Run Screen 1

2. Press the scroll knob (A) on the Harvest Performance Tracker (HPT) or the SELECT button (B) on the ground speed lever (GSL) to display the QuickMenu system.

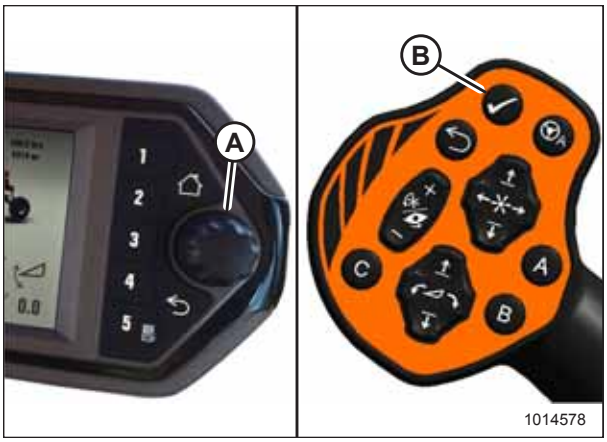

Figure 4.284: HPT Scroll Knob and GSL Select Button

3. Turn knob to scroll to REEL setting (A) on QuickMenu, and press knob to select it. The next page opens.

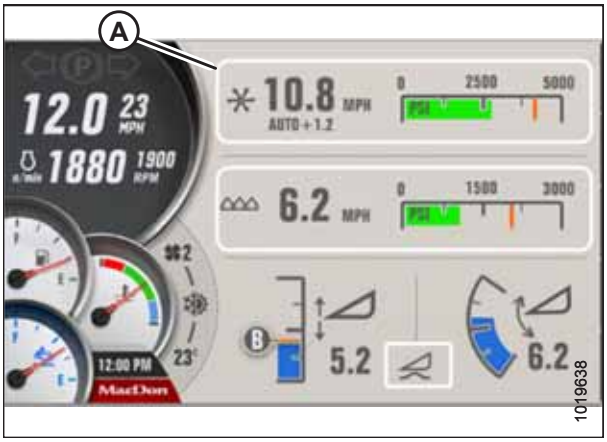

Figure 4.285: Header QuickMenu Screen

4. Scroll to mode window (A) and select it.
5. Scroll to AUTO in the pop-up window, and select it.

   NOTE:

   In AUTO mode, the speed is displayed in km/h or mph (B) which cannot be changed.

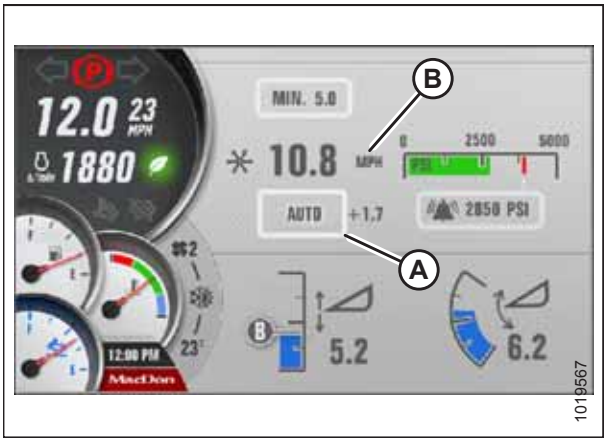

Figure 4.286: Draper Header Reel Screen

6. Scroll to the MINIMUM REEL SPEED setting (A) and select it (this setting is grayed out in manual mode).
7. Turn scroll knob to adjust minimum reel speed between 0–8 km/h (5 mph). Press knob to select desired setting.
8. Scroll to INDEX value (C) and select it.
9. Turn scroll knob to set index value. The index range is +/- 8 km/h (5 mph) (zero, i.e. equal to ground speed, is the default). Press knob to select desired setting.

NOTE:

The reel operates at reel minimum speed when the ground speed is less than the set minimum speed. Minimum reel speed is displayed (A) and MIN will replace the AUTO +1.7 (B).

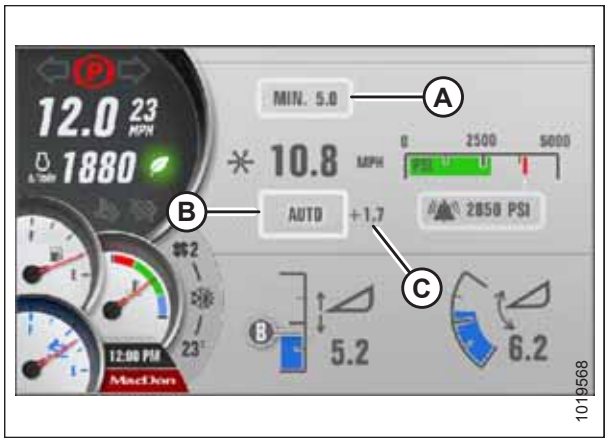

Figure 4.287: Auger Header Reel Screen

Setting Reel Speed in Manual Mode

This adjustment requires the header to be in operation.

1. If RUN SCREEN 1 is not already displayed, press soft key 1 (A) on the Harvest Performance Tracker (HPT) to display auger RUN SCREEN 1.



Figure 4.288: Header Run Screen 1

2. Press the scroll knob (A) on the Harvest Performance Tracker (HPT) or the SELECT button (B) on the ground speed lever (GSL) to display the QuickMenu system.

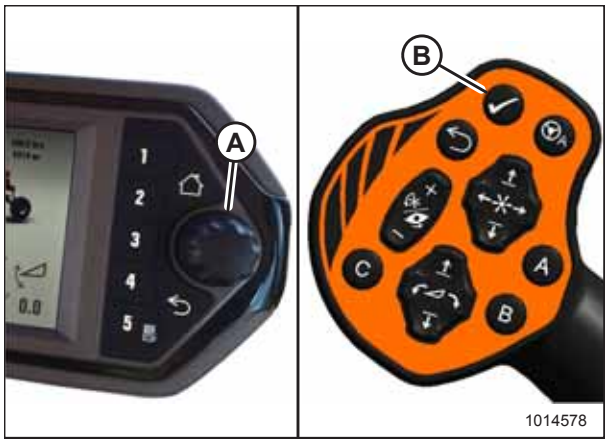

Figure 4.289: HPT Scroll Knob and GSL Select Button

3. Turn knob to scroll to REEL setting (A) on QuickMenu, and press knob to select it. The next screen opens.

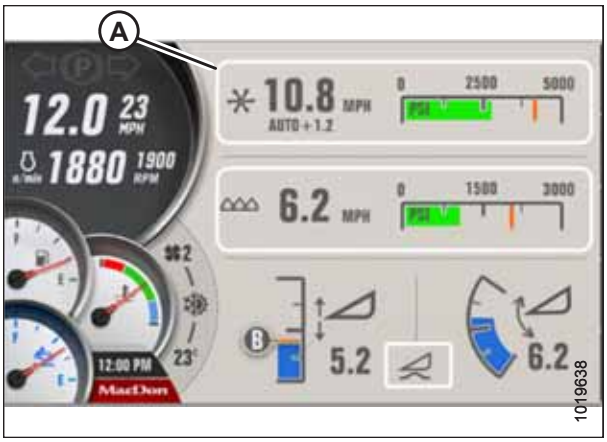

Figure 4.290: Header QuickMenu Screen

4. Scroll to mode window (A) and select it.
5. Scroll in pop-up window to MANUAL and select it.
6. Scroll to UNITS (B) and select desired unit (i.e., rpm, mph, or km/h).
7. Scroll to SPEED VALUE (C) and select it.

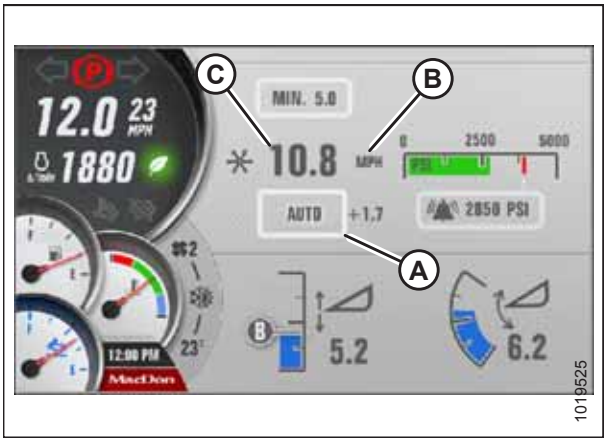

Figure 4.291: Auger Header Reel Screen

8. Use REEL SPEED switches (A) on GSL to set reel speed. The desired speed increases 1 rpm (0.1 mph or 0.2 km/h if set to mph or km/h) per momentary press, or continuous scrolling if switch is pressed and held.

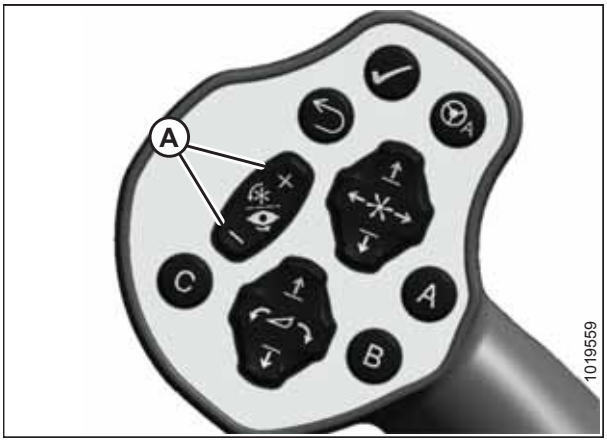

Figure 4.292: GSL

Setting Auger Speed

The auger speed can only be adjusted independently if the differential auger-reel control is engaged. This is a standard feature on A40DX GSS Auger Headers, but an option on A40DX Auger Headers without the Grass Seed option. To acquire this option, order Reel Speed Control kit (MD #B6604) from your Dealer.

If the differential auger-reel control is not engaged, the auger speed is automatically adjusted when you adjust reel speed.

NOTE:

When the differential auger-reel control is engaged, the minimum/maximum reel speed is dependent on the auger speed. In some cases, in order to have the reel run slower or faster, you may have to decrease or increase the auger speed.

1. To adjust the auger speed, press soft key 2 on the HPT to display RUN SCREEN 2.



Figure 4.293: HPT Screen Display

2. Press the scroll knob (A) on the HPT or the SELECT button (B) on the ground speed lever (GSL) to display the Quick Menu system.

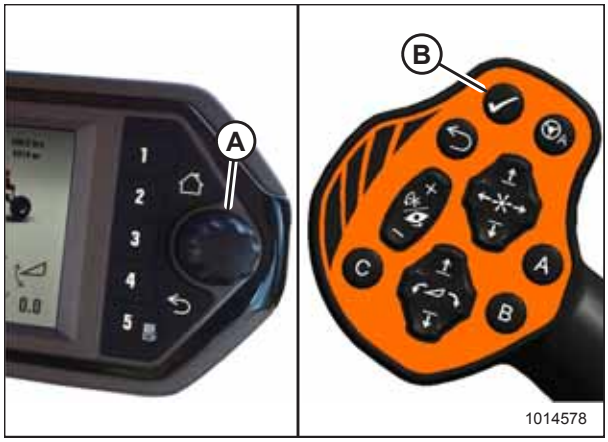

Figure 4.294: HPT Scroll Knob and GSL Select Button

3. Scroll to the auger speed tile (A) and select it.

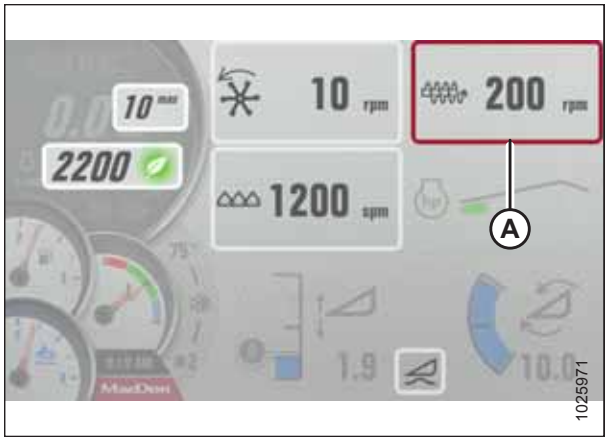

Figure 4.295: HPT Screen Display

4. The auger speed (A) can now be adjusted.



Figure 4.296: HPT Screen Display

Adjusting the Reel/Auger Alarm Pressure

Adjusting the reel/auger alarm allows the operator to set an alert to inform them that the reel is operating at a desired pressure. A lower setting will cause the alarm to be set off more often; a higher setting will allow the alarm to be set off less frequently. This adjustment requires the header to be in operation.

1. If RUN SCREEN 1 is not already displayed, press soft key 1 (A) on the Harvest Performance Tracker (HPT) to display auger RUN SCREEN 1.



Figure 4.297: Header Run Screen 1

2. Press the scroll knob (A) on the Harvest Performance Tracker (HPT) or the SELECT button (B) on the ground speed lever (GSL) to display the QuickMenu system.

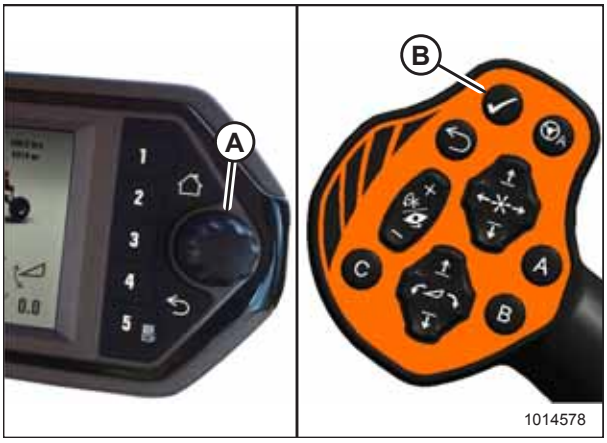

Figure 4.298: HPT Scroll Knob and GSL Select Button

3. Turn knob to scroll to REEL setting (A) on QuickMenu, and press knob to select it. The next screen opens.



Figure 4.299: Header QuickMenu Screen

4. Turn scroll knob to highlight reel pressure ALARM (A), and press knob to select it.
5. Turn knob to change the ALARM set-point in window (A). Scrolling past the highest setting turns off alarm. When the alarm point is off, the digital value is replaced with three dashed lines.
6. Adjust reel alarm pressure set-point to desired value, and press knob to select it. Factory setting is 19,995 kpa (2900 psi).

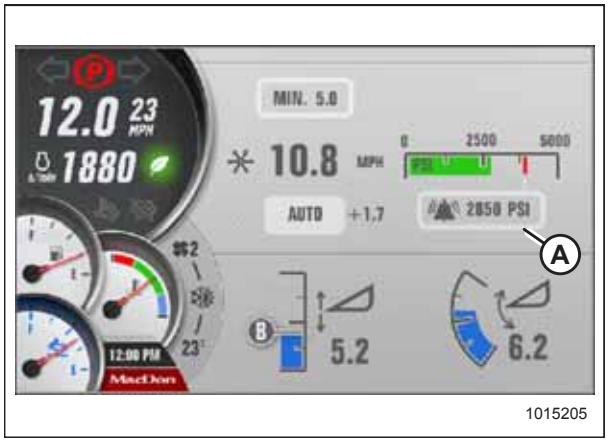

Figure 4.300: Setting Reel Alarm Pressure

4.8.2 Knife Speed

The ideal cutting speed of the knife should achieve a clean cut. Crop types and conditions usually influence the knife and forward speeds.

Table 4.5 Knife Speed Table

Header Description		Knife Speed			
Type	Size (ft.)	Minimum		Maximum	
		rpm[8]	spm[9]	rpm[8]	spm[9]
Auger A40DX Grass Seed	All	700	1400	975	1950
Auger A40DX	All	700	1400	975	1950

When the header is first attached to the windrower, the Harvest Performance Tracker (HPT) receives a code from the header that determines the knife speed range and the minimum speed.

The desired speed can be programmed and stored in the HPT so the knife will operate at the original set-point after the header is detached and reattached to the windrower.

8. Revolutions per minute is the speed of knife drive box pulley
9. Strokes per minute of knife (rpm x 2)

Refer to the header operator's manual for the suggested knife speed for a variety of crops and conditions.

NOTE:

The knife speed cannot be programmed outside the range specified for each header.

Setting Knife Speed

This adjustment requires the header to be in operation.

CAUTION

Check to be sure all bystanders have cleared the area.

1. If RUN SCREEN 1 is not already displayed, press soft key 1 (A) on the Harvest Performance Tracker (HPT) to display draper RUN SCREEN 1.



Figure 4.301: Auger Header Run Screen 1

2. Press the scroll knob (A) on the Harvest Performance Tracker (HPT) or the SELECT button (B) on the ground speed lever (GSL) to display the QuickMenu system.

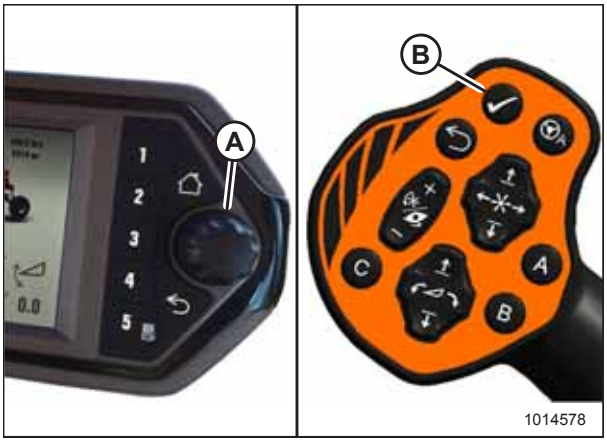

Figure 4.302: HPT Scroll Knob and GSL Select Button

3. Scroll to the KNIFE setting (A) on the QuickMenu screen, and select it.

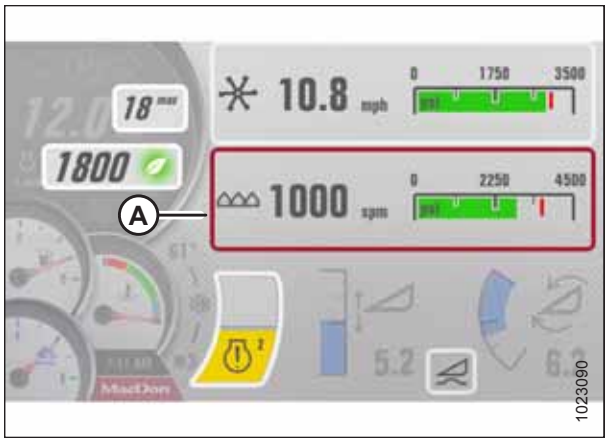

Figure 4.303: Auger Header QuickMenu Screen

4. Scroll to and select the KNIFE SPEED setting (A), displayed in strokes per minute.
5. Adjust knife speed using the HPT scroll knob.
6. Press knob to select.



Figure 4.304: Knife Screen

Adjusting Knife Alarm Pressure – Auger Header

Adjusting the knife alarm allows the operator to set an alert to inform them that the knife is operating at a desired pressure. A lower setting will cause the alarm to be set off more often; a higher setting will allow the alarm to be set off less frequently. This adjustment requires the header to be in operation.

1. If RUN SCREEN 1 is not already displayed, press soft key 1 (A) on the Harvest Performance Tracker (HPT) to display auger RUN SCREEN 1.



Figure 4.305: Header Run Screen 1

2. Press the scroll knob (A) on the Harvest Performance Tracker (HPT) or the SELECT button (B) on the ground speed lever (GSL) to display the QuickMenu system.

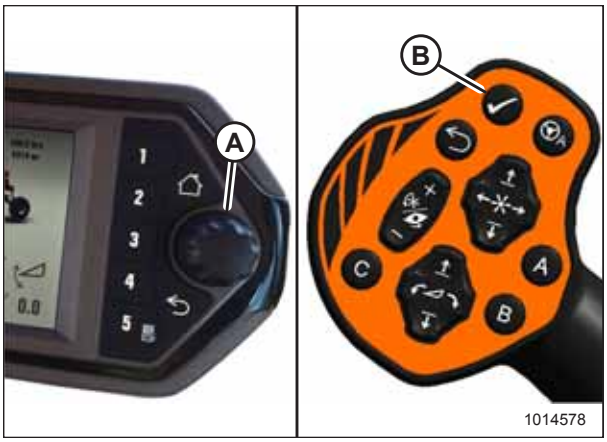

Figure 4.306: HPT Scroll Knob and GSL Select Button

3. Scroll to the KNIFE ALARM PRESSURE setting (A), and use the knob to select it.
4. Turn knob to change the ALARM set-point in window (A). Scrolling past the highest setting turns the alarm off. When the alarm point is off, the digital value is replaced with three dashed lines.
5. Adjust reel alarm pressure set-point to desired value, and press knob to select it. Factory setting is 24,821 kPa (3600 psi).



Figure 4.307: Knife Screen

Adjusting Knife Speed Alarm

This adjustment requires the header to be in operation.

1. If RUN SCREEN 1 is not already displayed, press soft key 1 (A) on the Harvest Performance Tracker (HPT) to display draper RUN SCREEN 1.



Figure 4.308: Header Run Screen 1

2. Press the scroll knob (A) on the Harvest Performance Tracker (HPT) or the SELECT button (B) on the ground speed lever (GSL) to display the QuickMenu system.

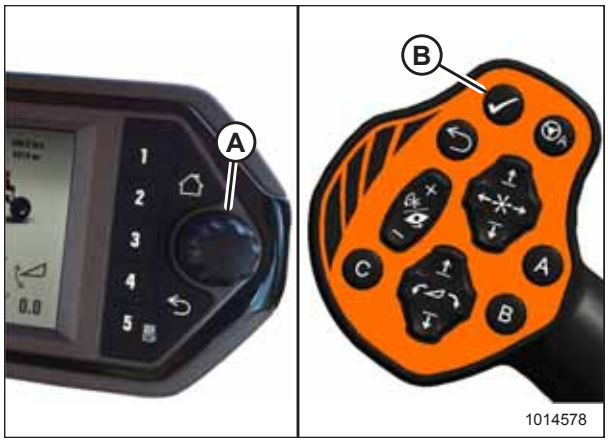

Figure 4.309: HPT Scroll Knob and GSL Select Button

3. Scroll to the KNIFE setting (A) on the QuickMenu screen, and select it.

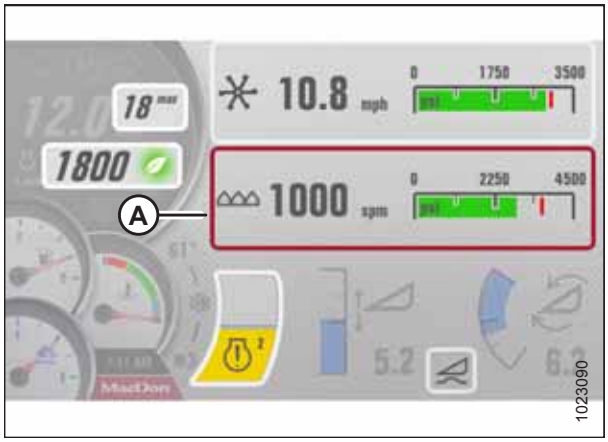

Figure 4.310: Auger Header QuickMenu Screen

4. Scroll to and select the KNIFE SPEED ALARM setting (A), displayed as a % of the preset knife speed.
5. Adjust knife speed alarm % as desired. Default is 70% and range is 50–90%.

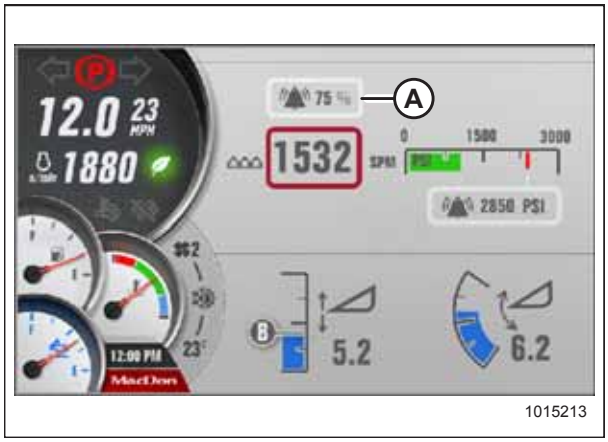

Figure 4.311: Knife Screen

4.8.3 Setting Float Options with Fixed Deck

When using an auger, the DECK SHIFT buttons can be used to store three different float settings. This is useful when cutting in varying ground conditions, or when having one side lighter is desirable (such as cutting along wheel tracks or irrigation borders).

CAUTION

Check to be sure all bystanders have cleared the area.

1. Start the engine and use the HEADER TILT switches (A) and (B) on the ground speed lever (GSL) to set header tilt to the MID-RANGE position.

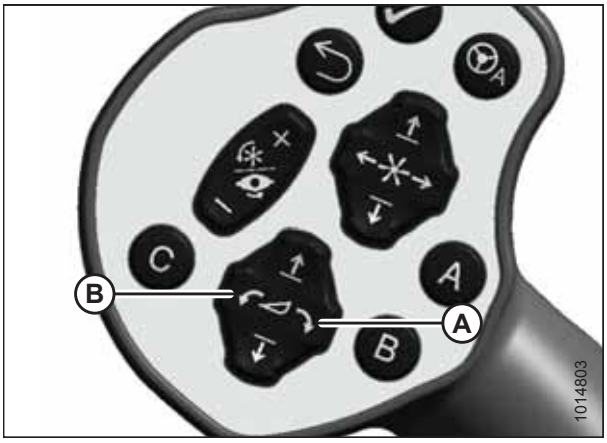

Figure 4.312: GSL

2. Engage header by pushing and holding the HEADER ENGAGE switch (A) down, and pulling up on collar (B).

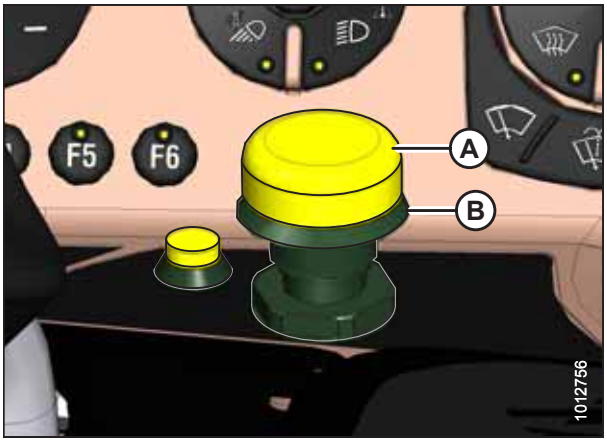

Figure 4.313: Header Engage Switch

3. Select one of the following deck positions using the DECK SHIFT switches on the operator's console:
   - Right-side delivery (A)
   - Center delivery (B)
   - Left-side delivery (C)

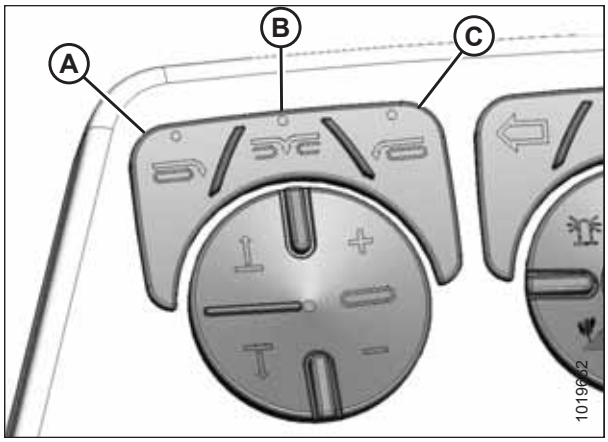

Figure 4.314: Header Deck Shift Switches

4. Disengage the header by pushing down on HEADER ENGAGE switch (A).
5. Adjust the float setting for the selected deck position. Refer to *Setting the Float, page 196*.
6. Repeat steps for the other deck positions.

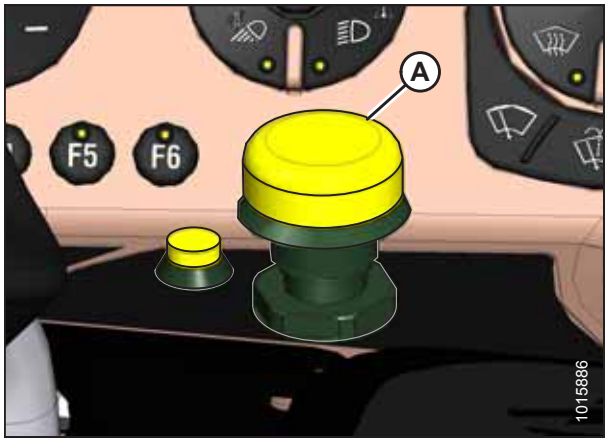

Figure 4.315: Header Engage Switch

4.8.4 Auger Header Run Screens

Two auger header specific run screens are viewable when operating windrower with an auger header attached. The screens are accessed by pressing the applicable soft keys on the Harvest Performance Tracker (HPT).

Run Screen 1

This is what Run Screen 1 looks like when operating an auger header.

Figure 4.316: Run Screen 1 – Auger Header Display

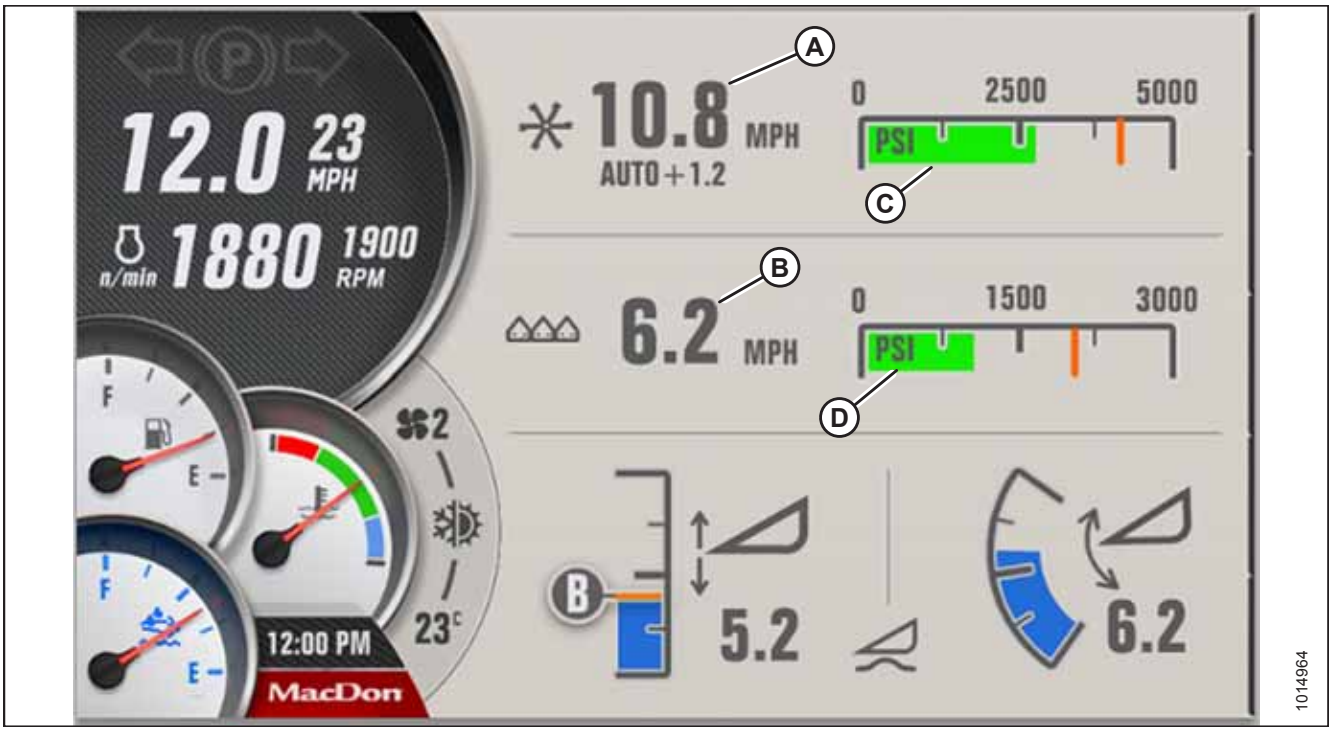

A - Reel/Auger Speed **B - Knife Speed** **C - Reel/Auger Pressure** **D - Knife Pressure**

Run Screen 2

This is what Run Screen 2 looks like when operating an auger header.

Figure 4.317: Run Screen 2 – Auger Header Display

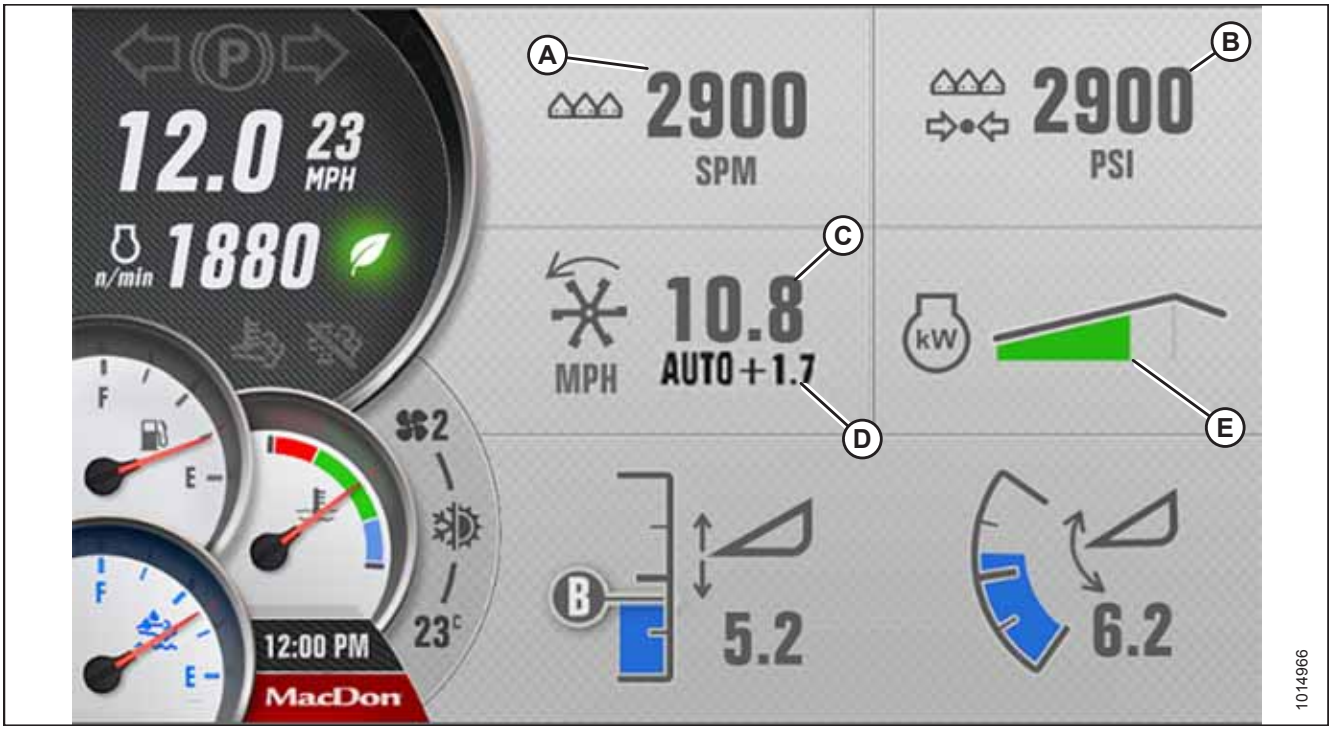

A - Knife Speed

B - Knife Pressure

C - Reel/Auger Speed

D - Index Value

E - Engine Load

4.9 Operating with an R85 Rotary Disc Header

4.9.1 Setting Disc Speed

This adjustment requires the header to be in operation.

CAUTION

Check to be sure all bystanders have cleared the area.

1. If RUN SCREEN 1 is not already displayed, press soft key 1 (A) on the Harvest Performance Tracker (HPT) to display RUN SCREEN 1.



Figure 4.318: Disc Header Run Screen 1

2. Press disc speed switch (A) on GSL to increase disc speed, or switch (B) to decrease speed.
3. Refer to screen in previous step for speed display.

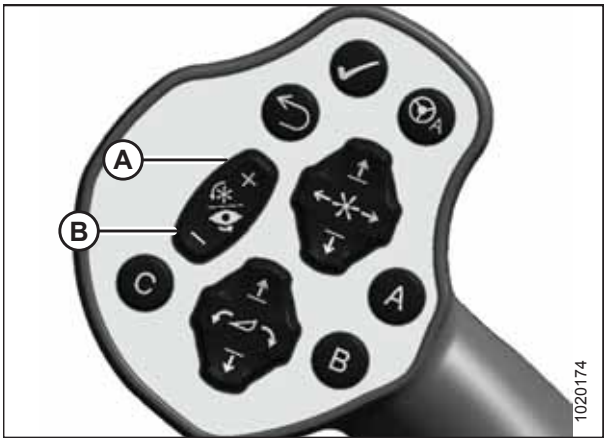

Figure 4.319: GSL

4.9.2 Adjusting Disc Pressure Alarm

Adjusting the disc alarm allows the operator to set an alert to inform them that the disc is operating at a desired pressure. A lower setting will cause the alarm to be set off more often; a higher setting will allow the alarm to be set off less frequently. This adjustment requires the header to be in operation.

CAUTION

Check to be sure all bystanders have cleared the area.

1. If RUN SCREEN 1 is not already displayed, press soft key 1 (A) on the Harvest Performance Tracker (HPT) to display draper RUN SCREEN 1.



Figure 4.320: Disc Header Run Screen 1

2. Press the scroll knob (A) on the Harvest Performance Tracker (HPT) or the SELECT button (B) on the ground speed lever (GSL) to display the QuickMenu system.

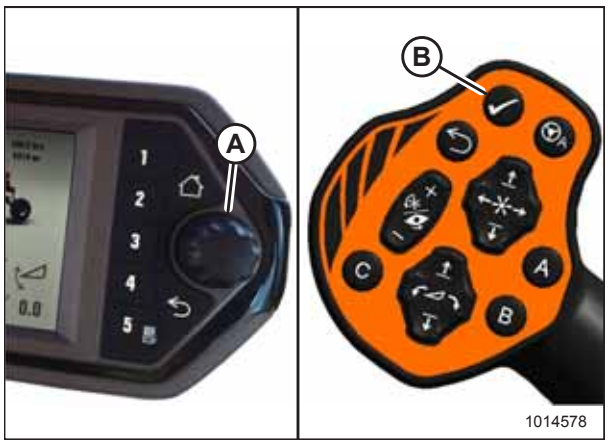

Figure 4.321: HPT Scroll Knob and GSL Select Button

3. Scroll to the DISC SPEED setting (A) on the QuickMenu screen, and select it.

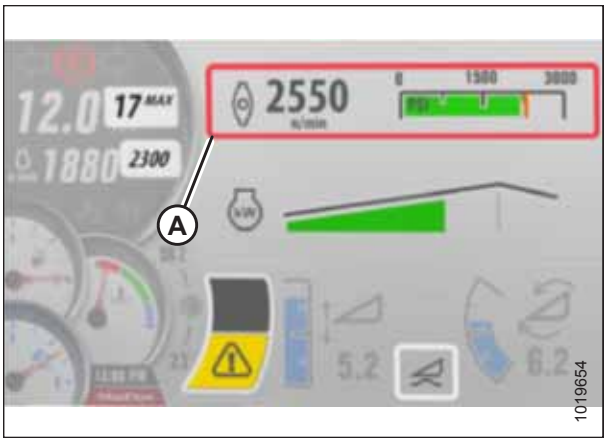

Figure 4.322: Disc Header QuickMenu Screen

4. Scroll to the DISC PRESSURE ALARM setting (A), and select it.
5. Scroll to the desired alarm set-point or scroll past the highest setting to turn the alarm OFF. The digital value is replaced by three dashed lines, indicating that it is possible to adjust the alarm set-point value.
6. Adjust disc alarm pressure set-point to desired value. Factory setting is 310 bar (4500 psi).



Figure 4.323: Disc Pressure Screen

4.9.3 Setting Float Options with Fixed Deck

When using an auger or rotary header, the DECK SHIFT buttons can be used to store three different float settings. This is useful when cutting in varying ground conditions, or when having one side lighter is desirable (such as cutting along wheel tracks or irrigation borders).

CAUTION

Check to be sure all bystanders have cleared the area.

1. Start the engine and use the HEADER TILT switches (A) and (B) on the ground speed lever (GSL) to set header tilt to the MID-RANGE position.

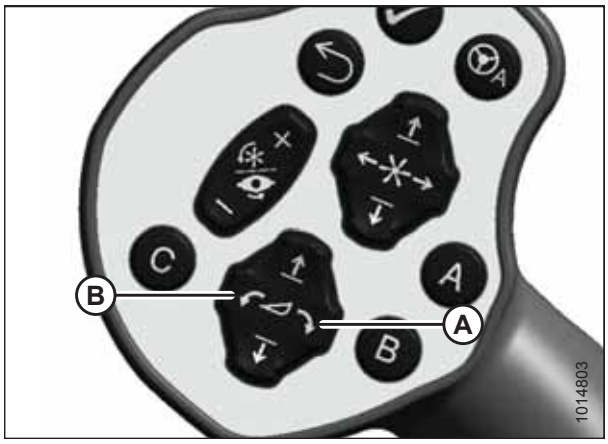

Figure 4.324: GSL

2. Engage header by pushing and holding the HEADER ENGAGE switch (A) down, and pulling up on collar (B).

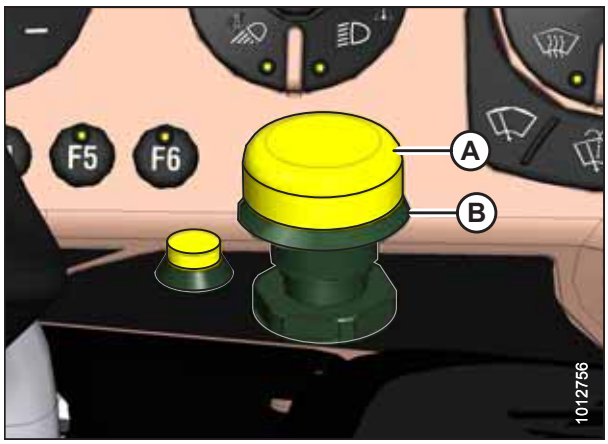

Figure 4.325: Header Engage Switch

3. Select one of the following deck positions using the DECK SHIFT switches on the operator's console:
   - Right-side delivery (A)
   - Center delivery (B)
   - Left-side delivery (C)

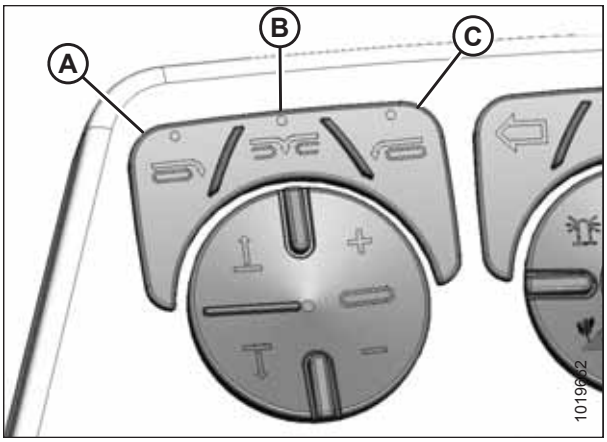

Figure 4.326: Header Deck Shift Switches

4. Disengage the header by pushing down on HEADER ENGAGE switch (A).
5. Adjust the float setting for the selected deck position. Refer to *Setting the Float, page 196*.
6. Repeat steps for the other deck positions.

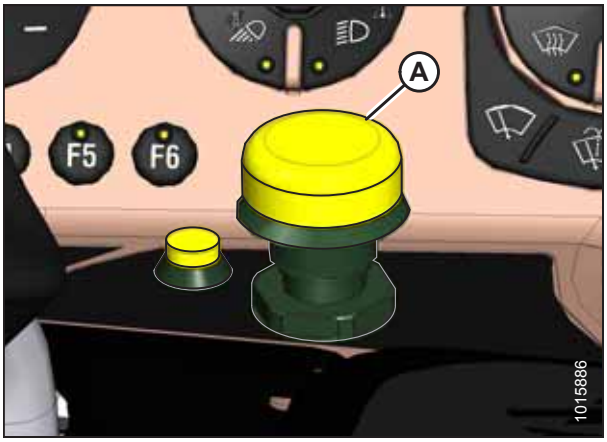

Figure 4.327: Header Engage Switch

4.9.4 Disc Header Run Screens

Two disc header specific run screens are viewable when operating windrower with an auger header attached. The screens are accessed by pressing the applicable soft keys on the Harvest Performance Tracker (HPT).

Run Screen 1

This is what Run Screen 1 looks like when operating a rotary disc header.

Figure 4.328: Run Screen 1 – Rotary Disc Header Display

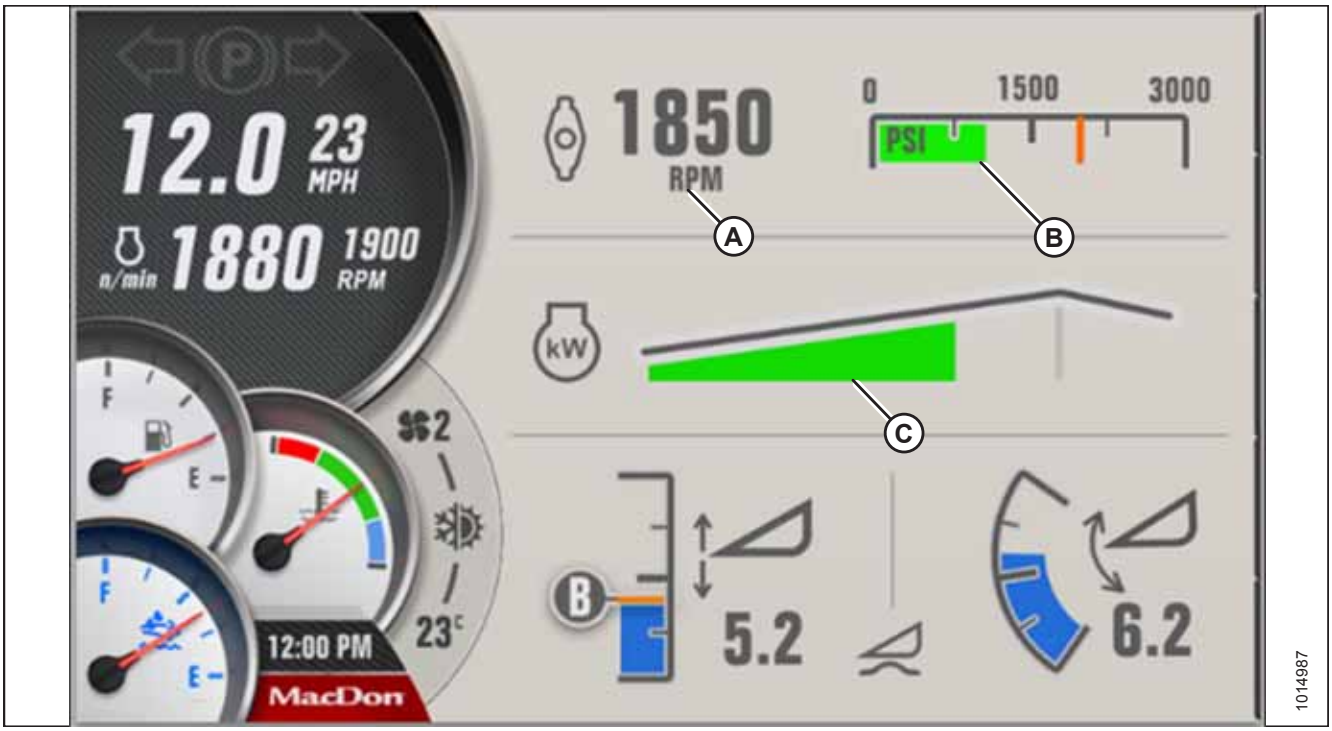

A - Disc Speed

B - Disc Pressure

C - Engine Load Bar

Run Screen 2

This is what Run Screen 2 looks like when operating a rotary disc header.

Figure 4.329: Run Screen 2 – Rotary Disc Header Display

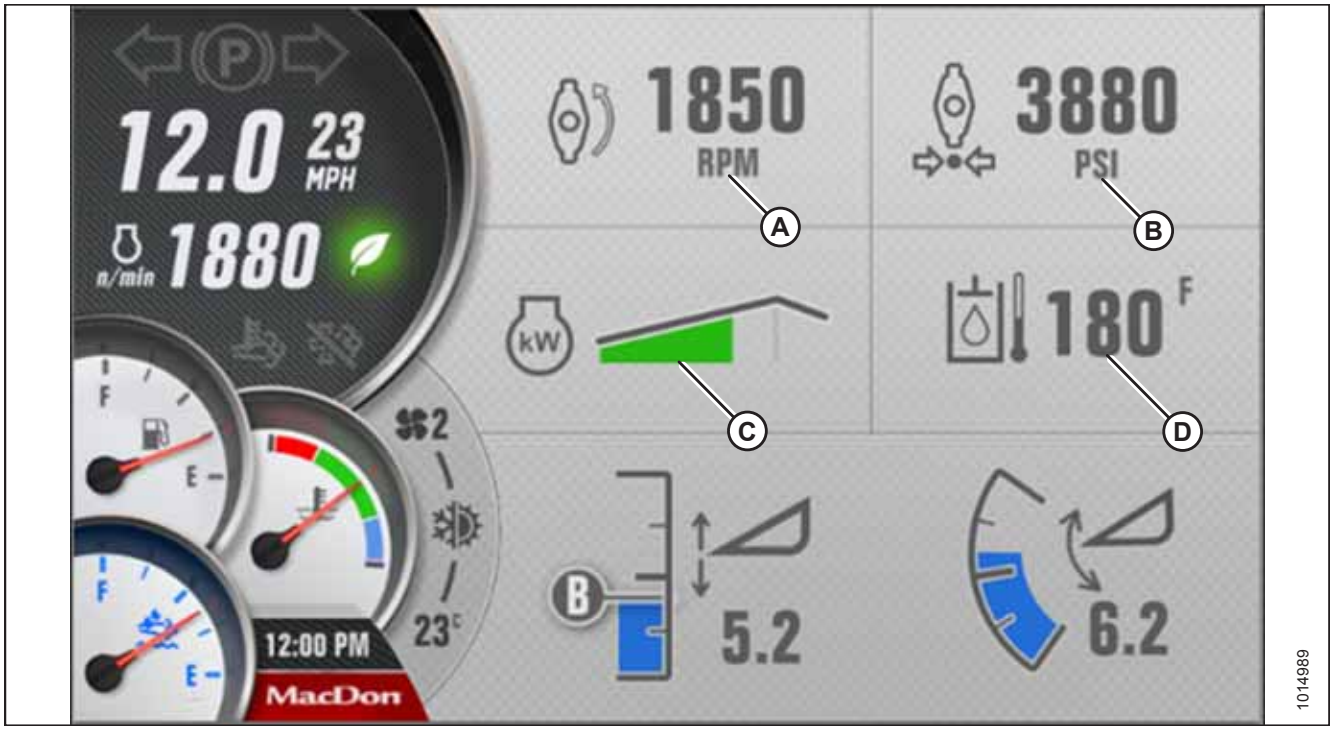

A - Disc rpm Digital

B - Disc Pressure Digital

C - Engine Load Bar

D - Hydraulic Oil Temperature

4.10 Operating with an R113 Rotary Disc Header

4.10.1 Disc Speed

The ideal disc speed should achieve a clean cut. Crop types and conditions affect disc and ground speeds.

Refer to the header operator's manual for the suggested disc speed for a variety of crops and conditions.

Setting Disc Speed

Default disc speed is 2000 rpm. Follow these steps to adjust the disc speed.

CAUTION

Check to be sure all bystanders have cleared the area.

1. Engage the header. Refer to *Engaging and Disengaging the Header, page 199*.
2. Adjust the disc speed with the DISC SPEED INCREASE (A) or DISC SPEED DECREASE (B) buttons on the ground speed lever (GSL).

   NOTE:

   Disc speed increases 50 rpm per momentary button push, or at a rate of 100 rpm/sec if the button is pushed and held.



Figure 4.330: GSL

Adjusting Disc Pressure Alarm

Adjusting the disc alarm allows the operator to set an alert to inform them that the disc is operating at a desired pressure. A lower setting will cause the alarm to be set off more often; a higher setting will allow the alarm to be set off less frequently. This adjustment requires the header to be in operation.

CAUTION

Check to be sure all bystanders have cleared the area.

1. If RUN SCREEN 1 is not already displayed, press soft key 1 (A) on the Harvest Performance Tracker (HPT) to display draper RUN SCREEN 1.



Figure 4.331: Disc Header Run Screen 1

2. Press the scroll knob (A) on the Harvest Performance Tracker (HPT) or the SELECT button (B) on the ground speed lever (GSL) to display the QuickMenu system.

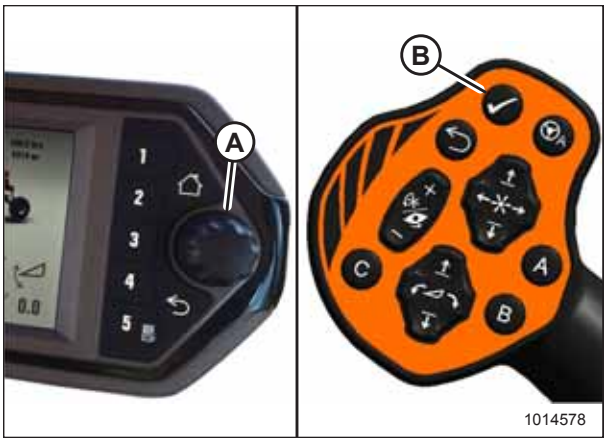

Figure 4.332: HPT Scroll Knob and GSL Select Button

3. Scroll to the DISC SPEED setting (A) on the QuickMenu screen, and select it.

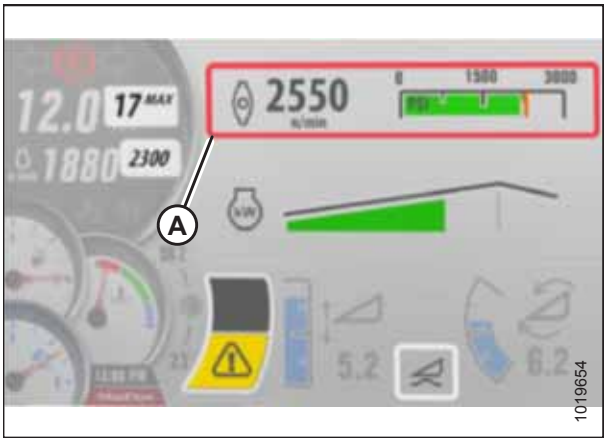

Figure 4.333: Disc Header QuickMenu Screen

4. Scroll to the DISC PRESSURE ALARM setting (A), and select it.
5. Scroll to the desired alarm set-point or scroll past the highest setting to turn the alarm OFF. The digital value is replaced by three dashed lines, indicating that it is possible to adjust the alarm set-point value.
6. Adjust disc alarm pressure set-point to desired value. Factory setting is 310 bar (4500 psi).



Figure 4.334: Disc Pressure Screen

4.10.2 Setting Float Options with Fixed Deck

When using an auger or rotary header, the DECK SHIFT buttons can be used to store three different float settings. This is useful when cutting in varying ground conditions, or when having one side lighter is desirable (such as cutting along wheel tracks or irrigation borders).

CAUTION

Check to be sure all bystanders have cleared the area.

1. Start the engine and use the HEADER TILT switches (A) and (B) on the ground speed lever (GSL) to set header tilt to the MID-RANGE position.

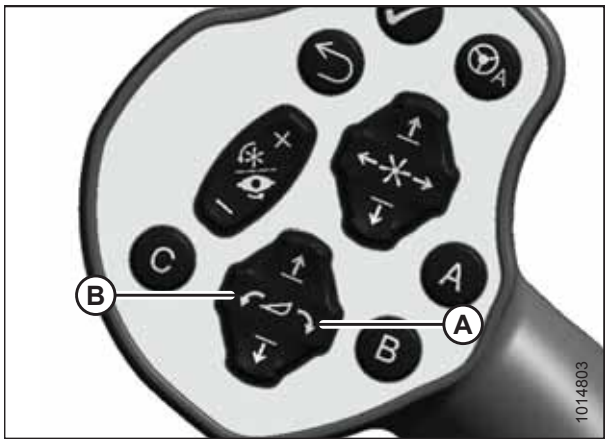

Figure 4.335: GSL

2. Engage header by pushing and holding the HEADER ENGAGE switch (A) down, and pulling up on collar (B).

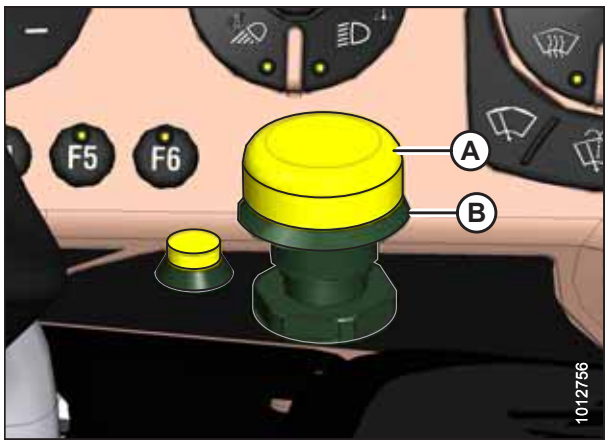

Figure 4.336: Header Engage Switch

3. Select one of the following deck positions using the DECK SHIFT switches on the operator's console:
   - Right-side delivery (A)
   - Center delivery (B)
   - Left-side delivery (C)

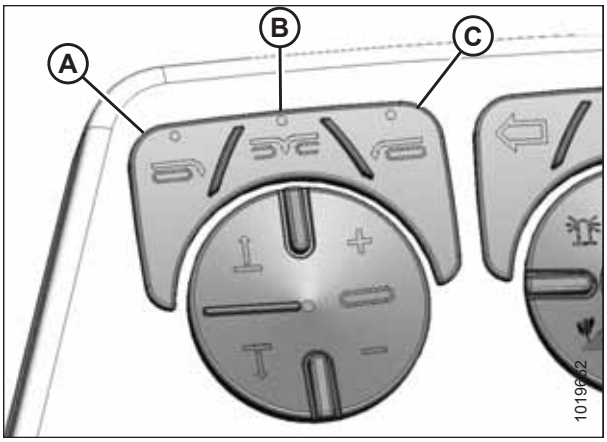

Figure 4.337: Header Deck Shift Switches

4. Disengage the header by pushing down on HEADER ENGAGE switch (A).
5. Adjust the float setting for the selected deck position. Refer to *Setting the Float, page 196*.
6. Repeat steps for the other deck positions.

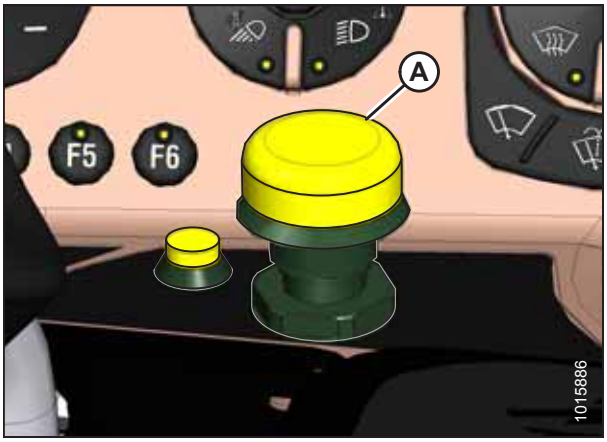

Figure 4.338: Header Engage Switch

4.10.3 Disc Header Run Screens

Two disc header specific run screens are viewable when operating windrower with an auger header attached. The screens are accessed by pressing the applicable soft keys on the Harvest Performance Tracker (HPT).

Run Screen 1

This is what Run Screen 1 looks like when operating a rotary disc header.

Figure 4.339: Run Screen 1 – Rotary Disc Header Display

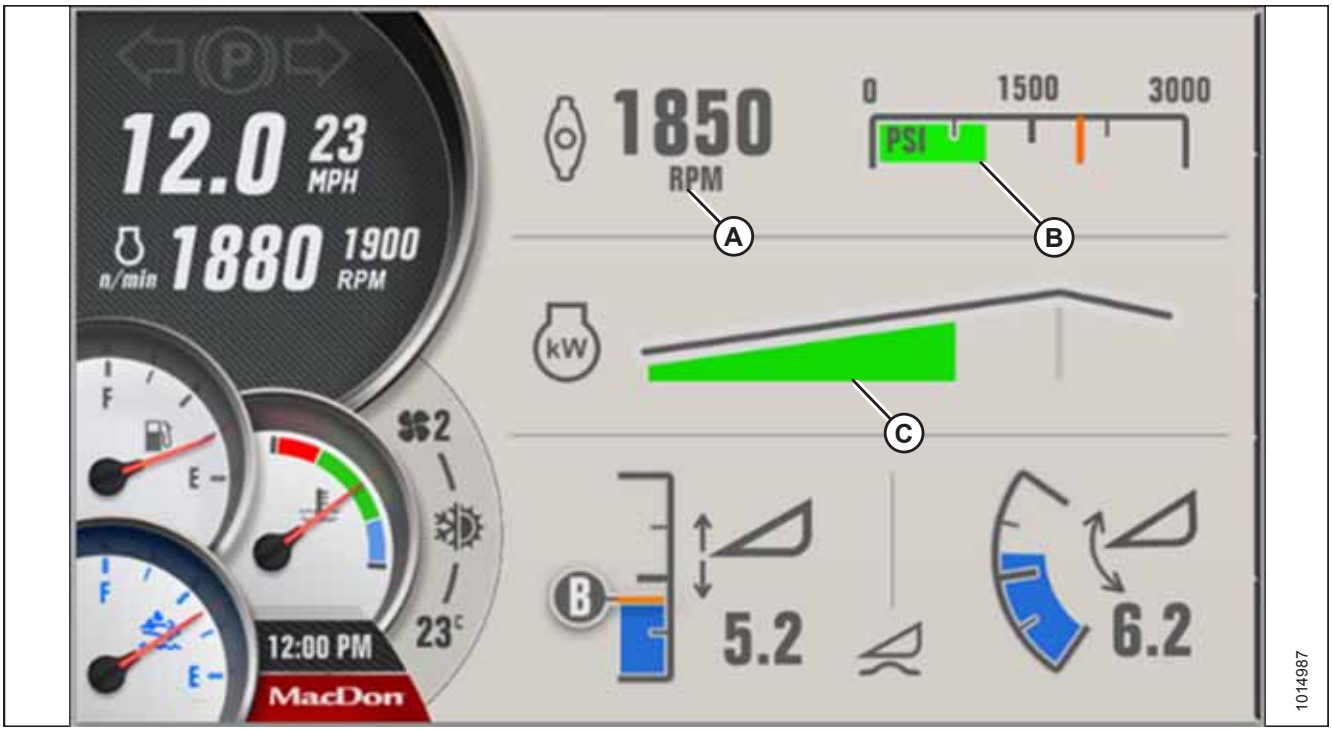

A - Disc Speed **B - Disc Pressure** **C - Engine Load Bar**

Run Screen 2

This is what Run Screen 2 looks like when operating a rotary disc header.

Figure 4.340: Run Screen 2 – Rotary Disc Header Display

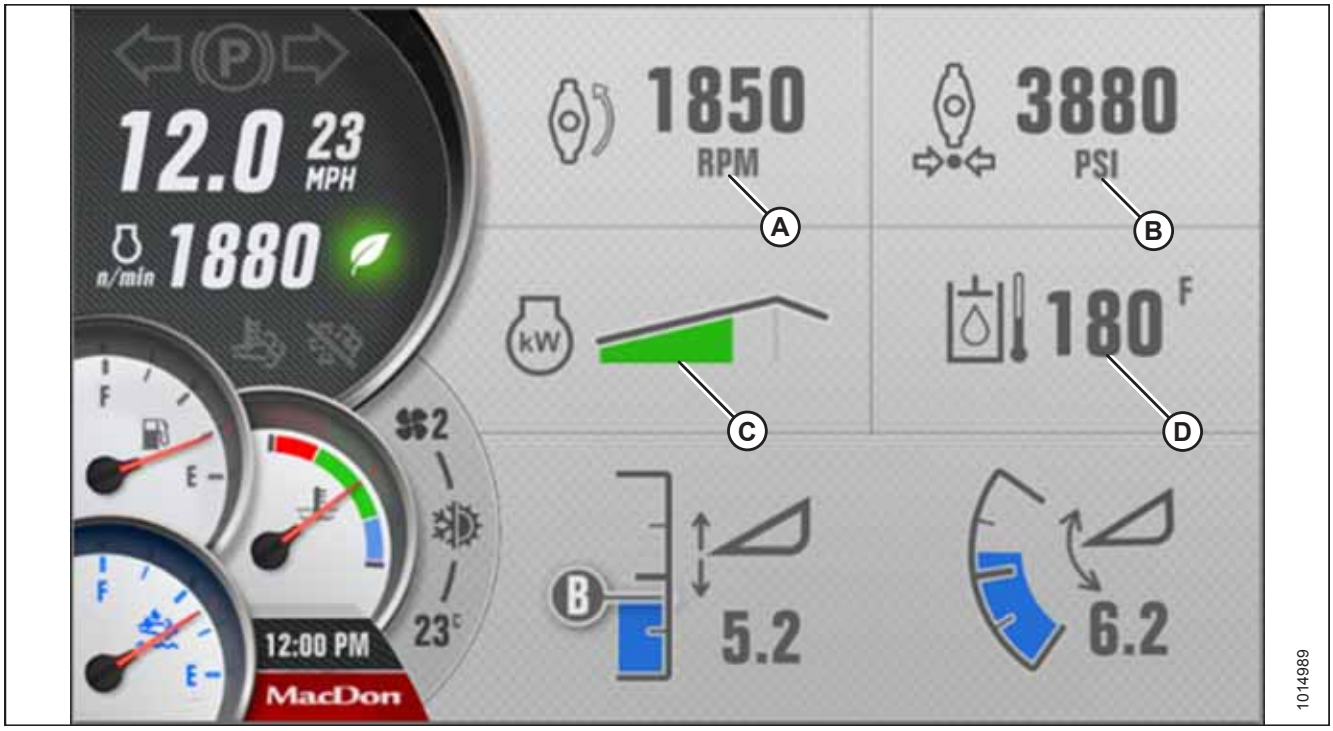

A - Disc rpm Digital

B - Disc Pressure Digital

C - Engine Load Bar

D - Hydraulic Oil Temperature

Chapter 5: Maintenance and Servicing

The following section will guide you through the windrower's basic maintenance and service requirements.

5.1 Recommended Fuel, Fluids, and Lubricants

5.1.1 Storing Lubricants and Fluids

Your machine can only operate at top efficiency if clean fuel and lubricants are used.

- Buy good quality, clean fuel from a reputable Dealer.
- Use clean containers to handle fuel and lubricants.
- Store in an area protected from dust, moisture, and other contaminants.
- Avoid storing fuel over long periods of time. If you have a slow fuel turnover in the windrower or supply tank, add fuel conditioner and keep tank full to avoid condensation problems.
- Store fuel in a convenient place away from buildings.
- Diesel exhaust fluid (DEF) should be stored in a cool, dry, well ventilated area, out of direct sunlight, on lower shelf or on floor.
- DEF is corrosive to some metals and should only be stored in polyethylene, polypropylene, or stainless steel containers.
- DEF containers should be sealed to prevent contamination and the evaporation of water which will affect the specified water to urea ratio.
- Diesel fuel should never be mixed with DEF.

NOTE:

DEF will degrade over time depending on temperature and exposure to sunlight. Shelf life specifications, as defined by ISO Spec 22241-3, are the minimum expectations for shelf life when stored at constant temperatures. If stored between 12 to 32°C (10 to 90 °F), shelf life will easily be one year. If the maximum temperature does not exceed approximately 24°C (75°F) for an extended period of time, the shelf life will be two years.

5.1.2 Fuel Specifications

Use only ultra low sulphur diesel (ULSD) from a reputable supplier. For most year-round service, No. 2 ULSD fuel meeting ASTM specification D975 Grade S15 will provide good performance.

If the vehicle is exposed to extreme cold (below -7°C [20°F]) or is required to operate at colder-than-normal conditions for prolonged periods, use climatized No. 2 diesel fuel, or dilute the No. 2 ULSD fuel with 50% No. 1 ULSD fuel. This will provide better protection from fuel gelling or wax-plugging of the fuel filters.

Table 5.1 Fuel Specification

Fuel	Specification	Sulphur (by weight)	Water and Sediment (by volume)	Cetane No. °C (°F)	Lubricity
ULSD Grade No. 2	ASTM D975	0.5% maximum	0.05% maximum	40 (104) minimum	520 Microns
ULSD Grade No. 1 and 2 mix[10]	n/a	1% maximum 0.5% maximum preferred	0.1% maximum	45–55 (113–130) cold weather / high altitude	460 Microns

10. Optional when operating temperature is below 0°C (32°F) .

In extreme situations, when available fuels are of poor quality or problems exist which are particular to certain operations, additives can be used. However, the engine manufacturer recommends consultation with the fuel supplier or engine manufacturer before using fuel additives. Situations where additives are useful include:

- A cetane improver additive can be used with low cetane fuels.
- A wax crystal modifier can help with fuels with high cold filter plugging points (CFPP).
- An anti-icer can help prevent ice formation in wet fuel during cold weather.
- An antioxidant or storage stability additive can help with fuel system deposits and poor storage stability.
- Diesel fuel conditioner can be used to increase the lubricity of fuels so that they meet the requirements given in Table *5.1, page 261*. Diesel fuel conditioner is available from your Dealer.

5.1.3 Lubricants, Fluids, and System Capacities

CAUTION

To avoid injury or death, do NOT allow ANY machine fluids to enter the body.

Table 5.2 System Capacities

Lubricant/Fluid	Location	Description	Capacity
Diesel exhaust fluid (DEF)	Diesel exhaust fluid tank	Must meet ISO 22241 requirements.	28 liters (7.5 US gallons)
Grease	As required unless otherwise specified	SAE multi-purpose high temperature extreme pressure (EP2) performance with 1% max molybdenum disulphide (NLGI Grade 2) lithium base	As required unless otherwise specified
Diesel fuel	Fuel tank	Ultra low sulphur diesel (ULSD) Grade No. 2, or ULSD Grade No. 1 and 2 mix[11]; refer to *5.1.2 Fuel Specifications, page 261* for more information	518 liters (137 US gallons)
Hydraulic oil	Hydraulic reservoir	Single grade trans-hydraulic oil. Recommended brands: • Petro-Canada Duratran • John Deere Hy-Gard J20C • Case HY-TRAN ULTRACTION • AGCO Power Fluid 821XL	60 liters (15.8 US gallons)[12]
Gear lubricant	Gearbox	SAE 75W-140 or 80W-140, API service class GL-5 fully synthetic gear lubricant, (SAE J2360 preferred)	2.3 liters (2.4 US quarts)
Gear lubricant	Wheel drive	SAE 75W-140 or 80W-140, API service class GL-5 fully synthetic gear lubricant, (SAE J2360 preferred)	1.4 liters (1.5 US quarts)
Antifreeze	Engine cooling system	ASTM D-6210 and Fleetguard ES Compleat®	33 liters (8.7 US gallons)[13]
Engine oil	Engine oil pan	SAE 15W-40 compliant with SAE specs for API Class SJ and CJ-4 engine oil	14 liters (14.8 US quarts)

11. Optional when operating temperature is below 0°C (32°F).
12. Denotes capacity of a dry system. Refill capacity is 58 liters (15 US gallons).
13. Equal parts with water; high quality, soft, deionized or distilled water as recommended by Supplier.

Table 5.2 System Capacities (continued)

Lubricant/Fluid	Location	Description	Capacity
Air conditioning refrigerant	Air conditioning system	R134A	2.38 kg (5.25 lb.)
Air conditioning refrigerant oil	Air conditioning system total capacity	PAG SP-15	240 cc (8.1 fl. oz.)
Windshield washer fluid	Windshield washer fluid tank	SAE J942 compliant	4 liters (1 US gallon)

If Fleetguard ES Compleat® is unavailable, use a coolant concentrate or prediluted coolant intended for use with heavy duty diesel engines and with a minimum of the following chemical and physical properties:

- Provides cylinder cavitation protection according to fleet study run at or above 60% load capacity.
- Protects the cooling system metals (cast iron, aluminum alloys, and copper alloys such as brass) from corrosion.

The additive package must be part of one of the following coolant mixtures:

- Ethylene glycol or propylene glycol base prediluted (40–60%) heavy duty coolant.
- Ethylene glycol or propylene glycol base heavy duty coolant concentrate in a 40–60% mixture of concentrate with quality water.

Water quality is important to the performance of the cooling system. Distilled, deionized, or demineralized water is recommended for mixing with ethylene glycol and propylene glycol base engine coolant concentrate.

IMPORTANT:

Do **NOT** use cooling system sealing additives or antifreeze that contains sealing additives.

5.1.4 Filter Part Numbers

Table 5.3 M1240 Filter Part Numbers

Filter	Part Number
Engine oil filter	MD #111974
Hydraulic charge oil filter	MD #201713
Hydraulic return oil filter	MD #202986
Primary fuel filter element	MD #205028
Secondary fuel filter element	MD #205029
Fuel strainer (fuel tank vent line) filter	MD #111608
Primary element (cab)	MD #111060
Primary air filter element	MD #138685
Secondary air filter element	MD #139077
Return air filter	MD #109797
Diesel exhaust fluid (DEF) – suction filter	MD #207478
Diesel exhaust fluid (DEF) – vent hose filter	MD #111608
DEF supply module filter kit	MD #207510

5.2 Windrower Break-In Inspections and Maintenance Schedule

The maintenance schedule specifies the recommended periodic maintenance procedures and service intervals. Regular maintenance is the best insurance against early wear and untimely breakdowns. Follow this schedule to maximize machine life.

For detailed instructions, refer to the various procedures in this chapter. Use the fluids and lubricants specified in *5.1 Recommended Fuel, Fluids, and Lubricants, page 261*.

Service Intervals: The recommended service intervals are in hours of operation. Where a service interval is given in more than one time frame, for example 100 hours or annually, service the machine at whichever interval is reached first.

IMPORTANT:

Recommended intervals are for average conditions. Service the machine more often if operated under adverse conditions (severe dust, extra heavy loads, etc.).

CAUTION

Carefully follow safety messages given in *1 Safety, page 1*.

5.2.1 Break-in Inspection Schedule

Break-in Inspections		
Hours	**Item**	**Check**
1	Drive wheel nuts	Torque: 510 Nm (375 lbf·ft) dry Repeat checks at one hour intervals until torque stabilizes at two consecutive checks
5	A/C compressor belt	Tension
5	Caster wheel nuts	Torque: 170 Nm (125 lbf·ft)
5	Caster wheel anti-shimmy dampener bolts	Inboard bolt torque: 136 Nm (100·lbf·ft) Outboard bolt torque: 244 Nm (182 lbf·ft) Outboard jam nut: 136 Nm (100 lbf·ft)
5	Walking beam width adjustment bolts	Torque: 759 Nm (560 lbf·ft)
10	Walking beam width adjustment bolts	Torque: 759 Nm (560 lbf·ft)
50	Drive wheel nuts	Torque: 510 Nm (375 lbf·ft) dry Repeat checks at one hour intervals until torque stabilizes at two consecutive checks
50	Hose clamps: air intake / radiator / heater / hydraulic	Hand-tighten unless otherwise noted
50	Walking beam width adjustment bolts	Torque: 759 Nm (560 lbf·ft)
50	Caster wheel nuts	Torque: 170 Nm (125 lbf·ft)
50	Caster wheel anti-shimmy dampener bolts	Inboard bolt torque: 136 Nm (100 lbf·ft) Outboard bolt torque: 244 Nm (182 lbf·ft) Outboard jam nut: 136 Nm (100 lbf·ft)
50	Engine gearbox oil	Change
50	Drive wheel lubricant	Change
50	Charge system oil filter	Change
50	Return oil filter	Change

5.2.2 Maintenance Schedule/Record

Windrower serial number: _____

Combine this record with the record in the header operator's manual. Make copies of this page to continue the record.

Refer to *5 Maintenance and Servicing, page 261* for information about each maintenance procedure.

Maintenance Record	Action:	✓ - Check				♦ - Lubricate					▲ - Change				✹ - Clean				+ - Add			
Hour meter reading																						
Date																						
Serviced by																						
FIRST USE, refer to *5.2.1 Break-in Inspection Schedule, page 264*																						
10 Hours or Daily[14]																						
✓	Engine oil level[15]																					
✓	Engine gearbox oil level[15]																					
✓	Engine coolant level at reserve tank[15]																					
✓	Fuel tank[15]																					
✓	Drain fuel filter water trap[15]																					
✓	Hydraulic hoses and lines for leaks[15]																					
✓	Hydraulic oil level[15]																					
✓	Tire inflation[15]																					
✓	Diesel exhaust fluid (DEF) level[15]																					
Annually[16]																						
✓	A/C blower																					
✓	Antifreeze concentration																					
✓	Battery charge																					
✓	Battery fluid level																					
✓	Steering linkages																					
50 Hours																						
✹	Cab fresh air intake filter																					
♦	Caster pivots																					
♦	Forked caster wheel bearings																					
♦	Top lift link pivots on lift arms (2 places on both sides [x4])																					

14. Whichever occurs first.
15. A record of daily maintenance is not normally required but is at the Owner/Operator's discretion.
16. Perform annual maintenance prior to start of operating season.

100 Hours or Annually[14] , [16]																					
✹	A/C condenser																				
✹	Charge air cooler																				
✹	Hydraulic oil cooler																				
✹	Radiator																				
✹	Cab air return filter																				
250 Hours or Annually[14] , [16]																					
▲	Engine oil and filter																				
▲	Engine air cleaner primary filter element																				
♦	Single-sided caster wheel hub bearings																				
✓	Drive wheel lubricant level																				
♦	Mud caster wheel hub bearings																				
✓	Exhaust system (visually inspect for leakage point, loose clamps or loose hose)																				
▲	Engine gearbox oil																				
500 Hours or Annually[14] , [16]																					
▲	Primary and secondary fuel filters																				
▲	Hydraulic return filter and charge filter																				
✓	Safety systems																				
1000 Hours																					
✹	DEF supply module filter																				
1000 Hours or Annually[14]																					
▲	Fuel tank vent line filter																				
▲	Wheel drive lubricant																				
2000 Hours																					
▲	Crankcase breather filter and gasket																				
▲	DEF tank vent hose filter																				

2000 Hours or Every Two Years[14]																					
▲	Engine coolant																				
✓	General inspection																				
2000 Hours or Every Three Years[14]																					
▲	Hydraulic oil																				
4500 Hours or Every Three Years[14]																					
▲	DEF supply module filter																				
5000 Hours or Every Two Years[14]																					
✓	Engine valve tappet clearance																				

5.2.3 Electronic Maintenance Tool

The Electronic Maintenance Tool contains a list of items requiring service after 250 hours or more of windrower operation.

To access the maintenance tool, use the following procedure:

1. Press soft key 5 (A) to display the main menu.
2. To select the MAINTENANCE icon (C), use the Harvest Performance Tracker (HPT) scroll knob (B) or the ground speed lever (GSL) scroll wheel (not shown).
3. Press the HPT scroll knob (B) or the GSL SELECT button (not shown) to select the icon.



Figure 5.1: Opening the Main Menu

4. Select the MAINTENANCE icon (A) to open the maintenance menu (B). The following information can be viewed:
   - Completed maintenance
   - Selected maintenance notifications
   - Maintenance log

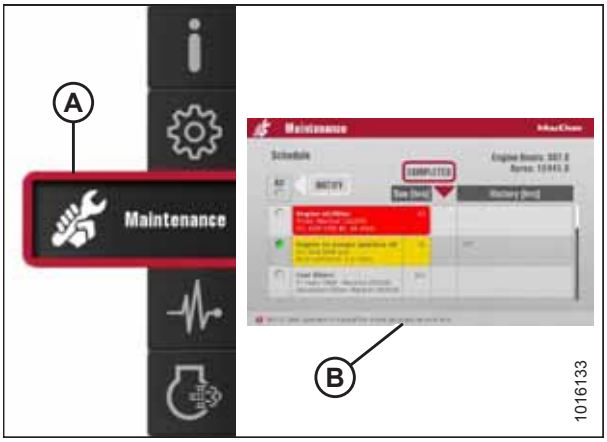

Figure 5.2: Maintenance Icon and Menu

5.3 Engine Compartment

CAUTION

- **NEVER operate engine in a closed building. Proper ventilation is required to avoid exhaust gas hazards.**
- **Keep the engine clean. Straw and chaff on a hot engine are a fire hazard.**
- **NEVER use gasoline, naphtha, or any other volatile material for cleaning purposes. These materials are toxic and/or flammable.**

5.3.1 Opening Hood

WARNING

To avoid bodily injury or death from unexpected startup of the machine, always stop the engine and remove the key from the ignition before leaving the operator's seat for any reason.

1. Stop the engine and remove the key.
2. Move latch (A) towards right cab-forward side of the windrower.
3. Grasp louver (B), and lift hood to open.

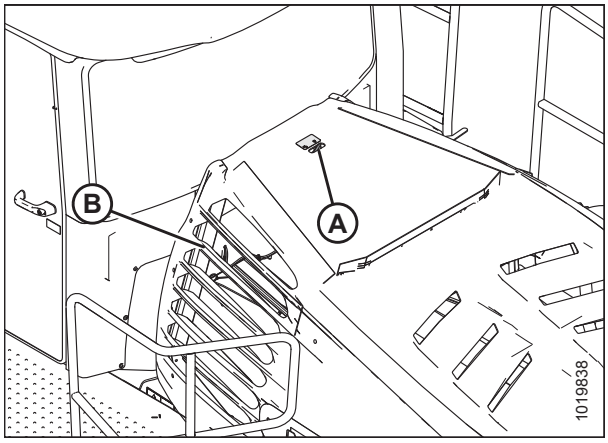

Figure 5.3: Hood

NOTE:

If the optional High Debris Cooler Intake kit is installed, a louver can still be used to open the hood.

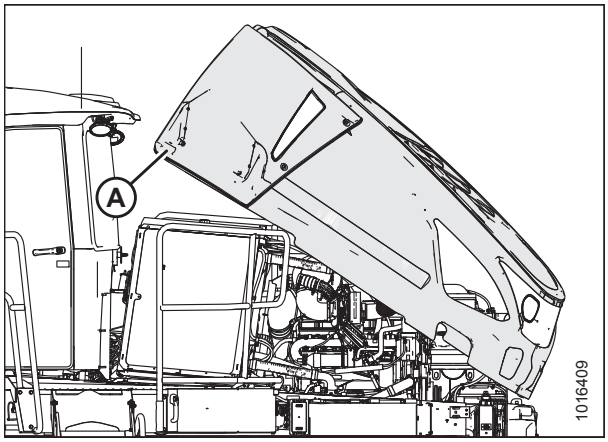

Figure 5.4: Hood with Optional High Debris Cooler Intake Kit

5.3.2 Closing Hood

1. Grasp hood by louver (A) and lower until hood engages latch.

   NOTE:

   Check that latch lever is not tilted to ensure hood is latched.

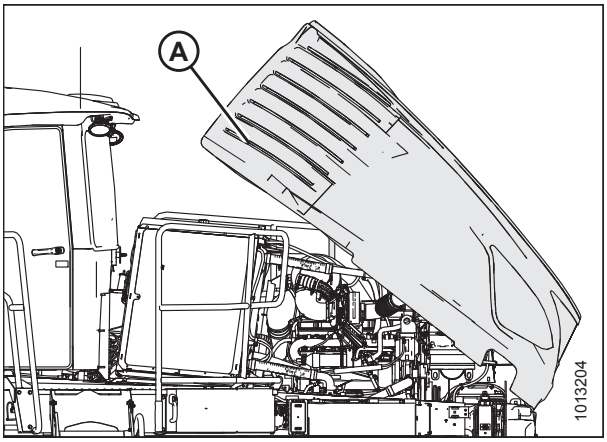

Figure 5.5: Engine Compartment

5.4 Platform

Swing-away platform and stair units are provided on the windrower for access to the operator's station and engine bay maintenance.

5.4.1 Opening Platform

Only the left cab-forward side platform can be opened.

CAUTION

Do NOT stand on an unlocked platform. It is unstable and may cause you to fall.

1. Approach platform/stair unit (A) on left cab-forward side of windrower and ensure cab door is closed.
2. Push latch (B), and pull platform (A) toward walking beam until it stops and latch engages.

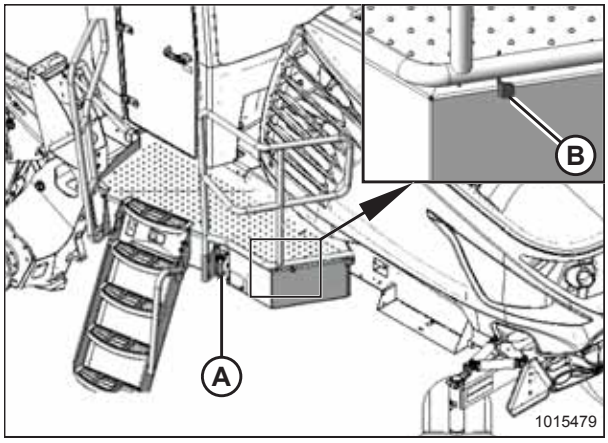

Figure 5.6: Left Cab-Forward Platform

5.4.2 Closing Platform

CAUTION

Do NOT stand on an unlocked platform. It is unstable and may cause you to fall.

1. Push latch (A) to unlock the platform (B).

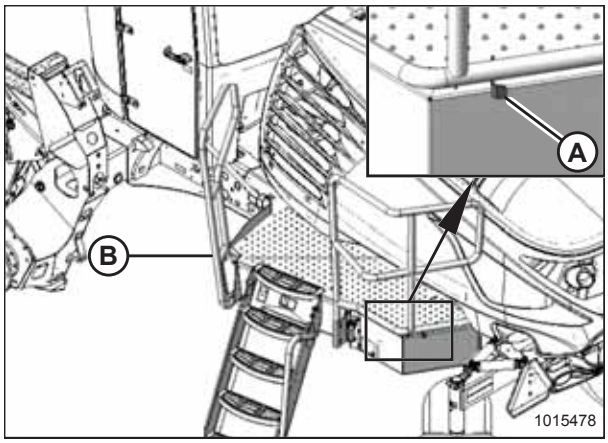

Figure 5.7: Open Platform

2. Pull platform (A) towards the cab until it stops and latch engages.

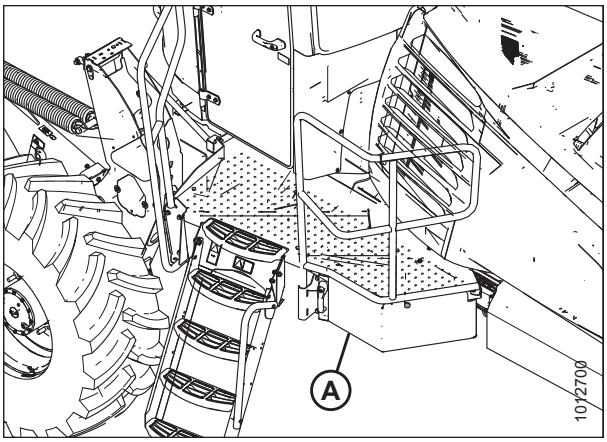

Figure 5.8: Closed Platform

5.4.3 Adjusting the Platform

To achieve proper gap between platform and frame, latch adjustment may be required.

1. Locate latch (B) beneath the platform.
2. Adjust the latch position by loosening bolts (A) and moving the latch (B).
3. Retighten bolts (A) and close the platform.

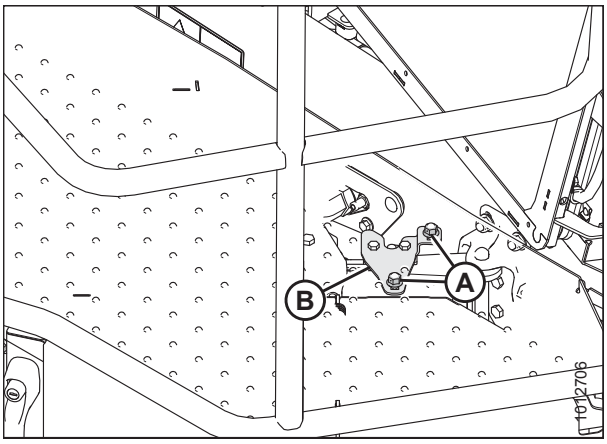

Figure 5.9: Left Platform

4. The rubber bumper (B) at the cab end of the platform should measure 52–60 mm (2–2 3/8 in.) when properly compressed against the frame. Platform should also sit firmly against the front guide (A).

   NOTE:

   Top plate of platform removed for clarity.

5. If adjustment is required, loosen two bolts (C) and slide support as required.
6. Tighten bolts (C) to 39.5 Nm (29.1 lbf·ft).

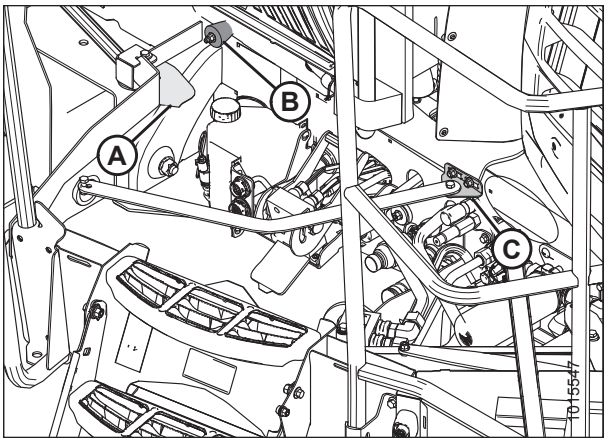

Figure 5.10: Left Platform

7. To adjust the horizontal position of the platform, loosen bolts (A) and adjust bolt (B).
8. Tighten bolts (A) to 68.5 Nm (50.5 lbf·ft).
9. Use bolts (C) to adjust the platform angle. Tighten bolts (C) to 68.5 Nm (50.5 lbf·ft) after adjustment is complete.

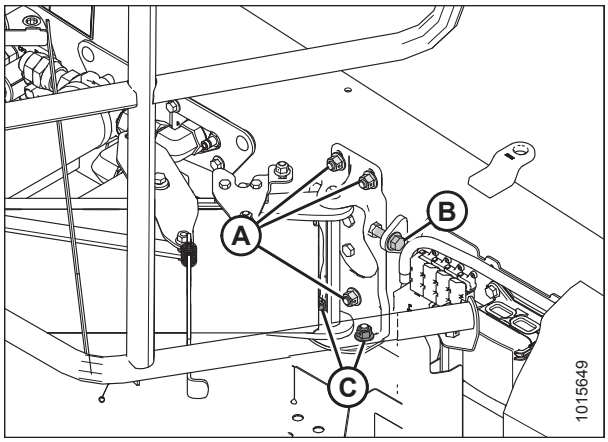

Figure 5.11: Left Platform

5.4.4 Accessing Tool Box

A tool box is located inside a storage compartment under the left cab-forward platform.

1. Grasp the handle on storage compartment (A) and press latch (B). Pull the unlatched handle to open the compartment.

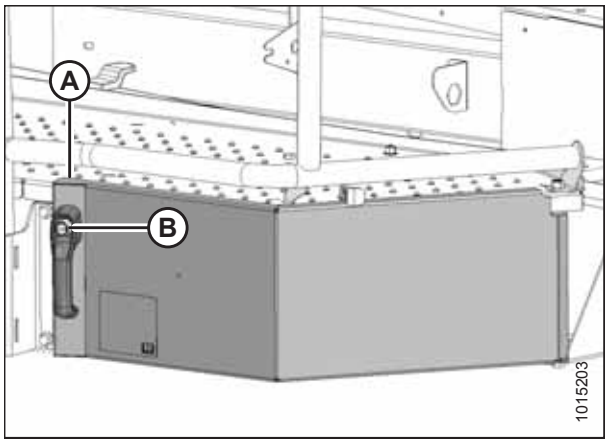

Figure 5.12: Tool Box

2. The tool box (A) is located inside storage compartment (B).
3. Swing compartment (B) under the platform to close it, and push on the handle to secure the latch.

   NOTE:

   The ignition key also locks the storage compartment.

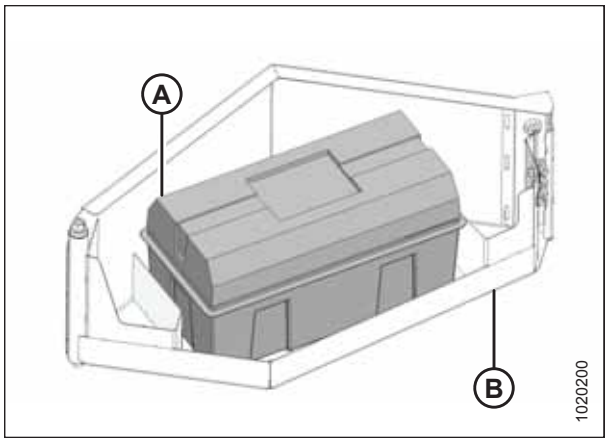

Figure 5.13: Tool Box

5.5 Break-In Inspection Procedures

For the break-in schedule, refer to *5.2.1 Break-in Inspection Schedule, page 264*.

5.5.1 Tightening Drive Wheel Nuts

To tighten the drive wheel nuts, follow these steps.

IMPORTANT:

- To avoid damage to wheel rims and studs, tighten nuts by hand. Threads must be clean and dry, do **NOT** apply any lubricant or anti-seize compound. Do **NOT** use an impact gun, and do **NOT** overtighten wheel nuts.
- Use only genuine, manufacturer specified nuts.

1. Locate the drive wheels (A).

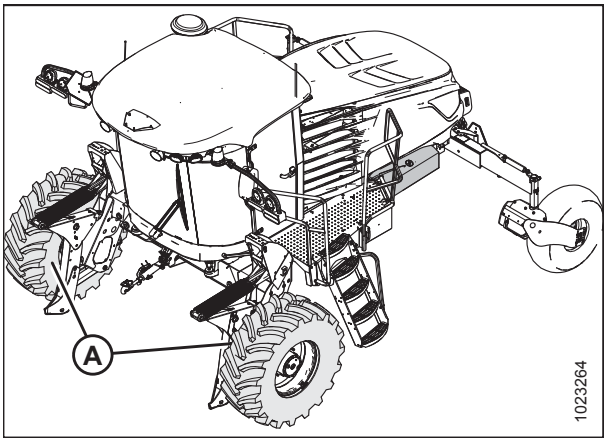

Figure 5.14: Drive Wheel location

2. Torque each nut (A) to 510 Nm (375 lbf·ft) using the tightening sequence shown at right.
3. Repeat tightening sequence two additional times, ensuring the specified torque is achieved each time.
4. Repeat torque procedure every hour until two consecutive checks confirm that there is no movement of the nuts (A).

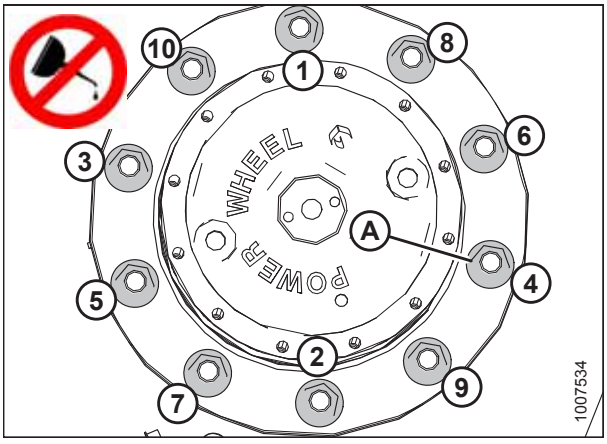

Figure 5.15: Drive Wheel

5.5.2 Tightening Caster Wheel Nuts

At first use or when a wheel is removed, check wheel nut/bolt torque every 15 minutes on the road or 1 hour in the field until the specified torque is maintained. Once specified torque is maintained, check wheel nut/bolt torque after 10 and 50 hours (field or road operation), and then every 200 hour intervals thereafter.

1. Locate the caster wheel assemblies (A).

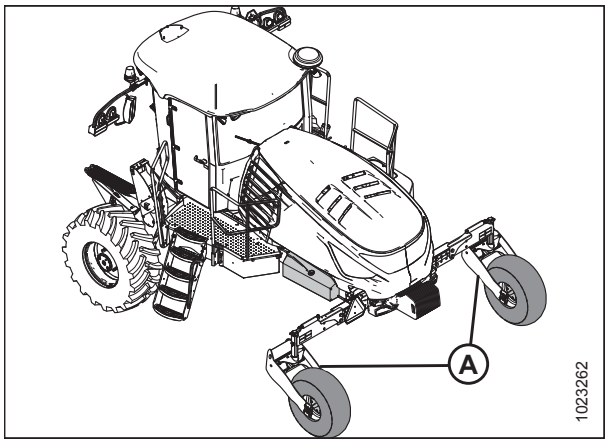

Figure 5.16: Caster Wheel Location

2. Tighten wheel nuts (A) to 163 Nm (120 lbf·ft) using the tightening sequence shown at right. Repeat the tightening sequence three times.

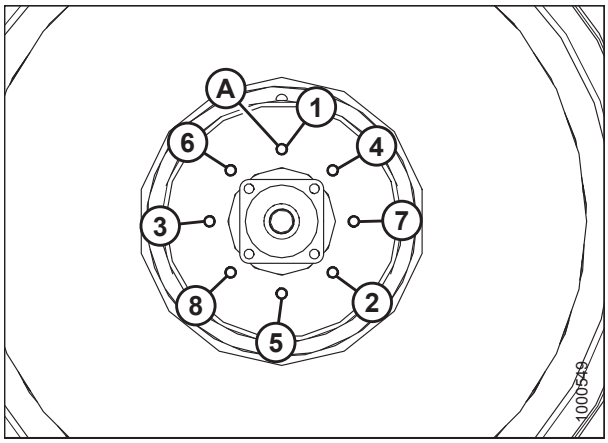

Figure 5.17: Forked Casters With Suspension

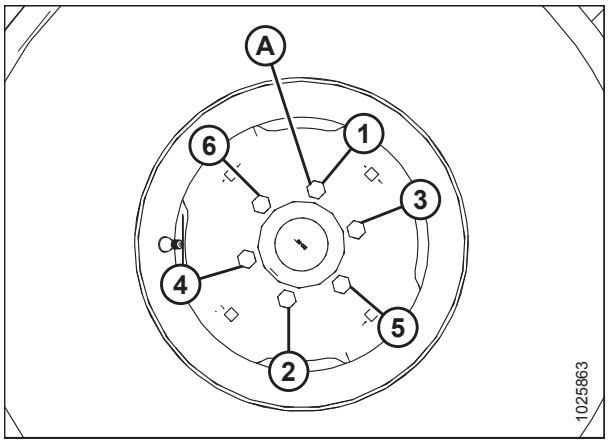

Figure 5.18: Single Side Caster

5.5.3 Tightening Caster Wheel Anti-Shimmy Dampeners

Each caster is equipped with two fluid-filled anti-shimmy dampeners (A).

The mounting bolts (B) and (C) need to be checked periodically for security. Refer to *5.2.2 Maintenance Schedule/Record, page 265*.

- Two inboard bolts (B) should be tightened to 136 Nm (100 lbf·ft)
- Outboard bolt (C) should be tightened to 244 Nm (182 lbf·ft)
- Outboard jam nut (D) should be tightened to 136 Nm (100 lbf·ft)

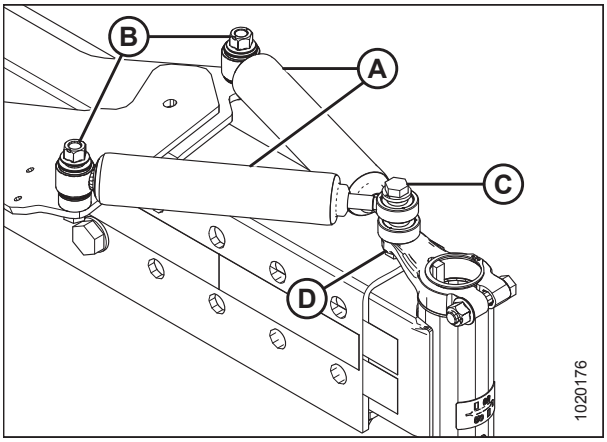

Figure 5.19: Anti-Shimmy Dampener

5.5.4 Tightening Walking Beam Adjustment Bolts

Check walking beam adjustment bolt torque after 5, 10, and 50 hours of field or road operation.

1. Tighten and torque back bolts (A) to 759 Nm (560 lbf·ft).
2. Tighten and torque bottom bolts (B) to 759 Nm (560 lbf·ft).
3. Repeat on opposite side.

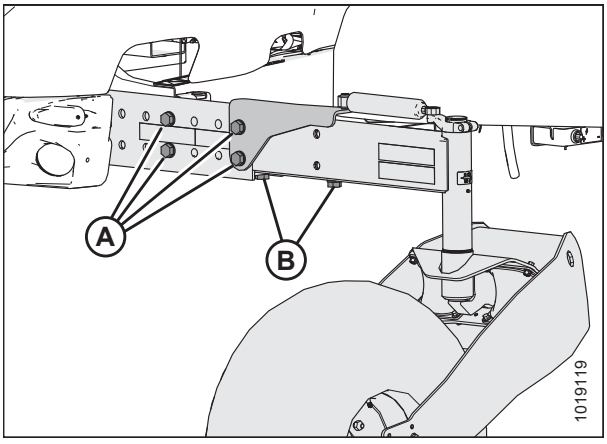

Figure 5.20: Walking Beam Adjustment Bolts

5.5.5 Tensioning Air Conditioner Compressor Belts

WARNING

To avoid bodily injury or death from unexpected startup of the machine, always stop the engine and remove the key from the ignition before leaving the operator's seat for any reason.

1. Stop the engine, and remove the key from the ignition.
2. Open the hood. For instructions, refer to *5.3.1 Opening Hood, page 268*.

3. Loosen compressor mounting hardware (A).
4. Pry compressor (B) away from engine so that a force of 45 N (10 lbf) deflects the belts (C) 5 mm (3/16 in.) at mid-span.

   NOTE:

   The tab (D) on bracket can be used as support for prying.
5. Tighten compressor mounting hardware (A).
6. Recheck tension and readjust as required.
7. Close the hood. For instructions, refer to *5.3.2 Closing Hood, page 269*.

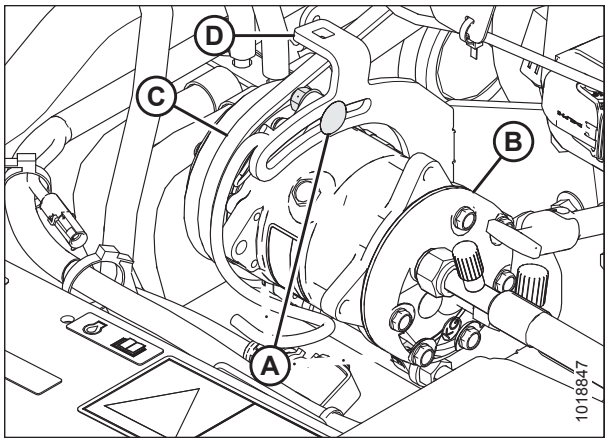

Figure 5.21: Air Conditioning (A/C) Compressor

5.5.6 Changing Engine Gearbox Lubricant

Change engine gearbox lubricant after the first 50 hours, and then at 250 hours as follows:

WARNING

To avoid bodily injury or death from unexpected startup of the machine, always stop the engine and remove the key from the ignition before leaving the operator's seat for any reason.

CAUTION

Park on a flat, level surface with the header on the ground, the ground speed lever in PARK position, and the steering wheel in locked position (centered). Wait for the HPT to beep and display a red P symbol to confirm the park brakes have engaged.

NOTE:

It is best to change lubricant in the morning before it warms up. If the engine is hot, wait 10 minutes before checking the lubricant level to allow the lubricant to cool and settle in the sump.

1. Park windrower on a level surface.
2. Stop the engine and remove the key.
3. Place a 4 liter (1 US gallon) drain pan under the gearbox.
4. Remove drain plug (A) and allow lubricant to completely finish draining.
5. Inspect the drain plug. Small metal shavings are normal. If there are any larger metal pieces, an inspection of the gearbox will be required.
6. Install drain plug (A).

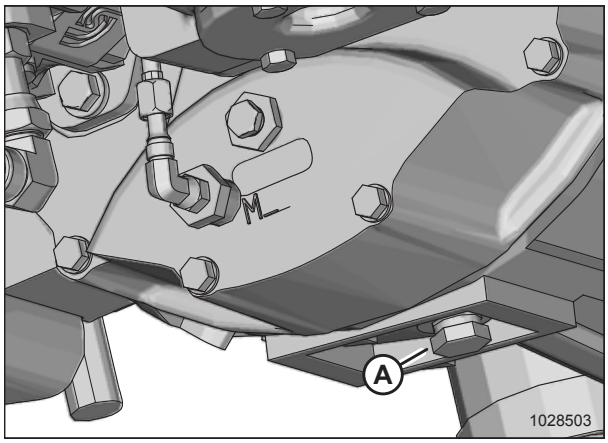

Figure 5.22: Engine Gearbox

7. Remove dipstick (A) and breather (B).

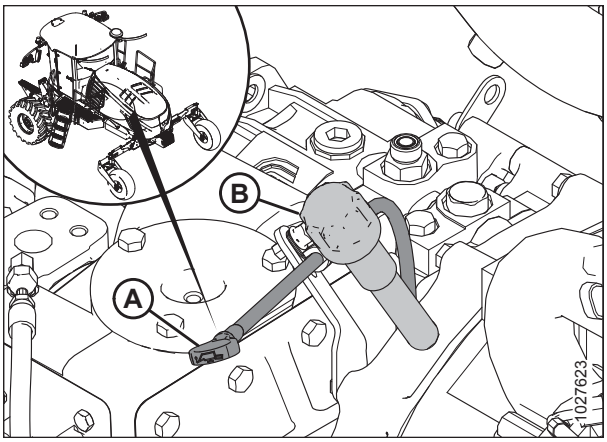

Figure 5.23: Gearbox Dipstick and Breather

8. Add lubricant until the oil level is between the ADD (A) and FULL (B) marks on the dipstick. For lubricant specifications, refer to the inside back cover.
9. Reinstall dipstick and breather.
10. Operate the engine at low idle and check for leaks at the check plug and drain plug.

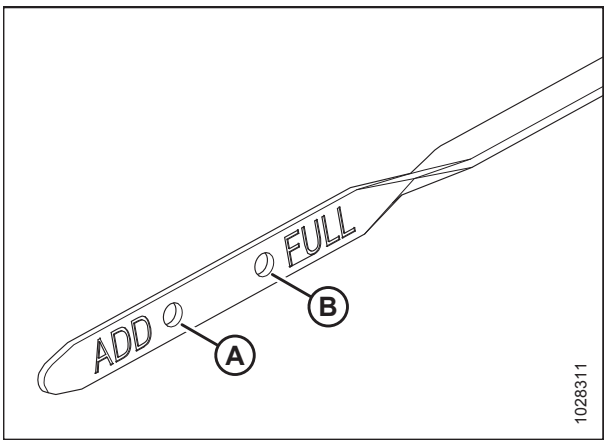

Figure 5.24: Bottom End of Dipstick

5.5.7 Changing Wheel Drive Lubricant

The wheel drive lubricant should be changed after the first 50 hours and every 1000 hours or annually, whichever occurs first. Change the lubricant when it is warm.

⚠ WARNING

To avoid bodily injury or death from unexpected startup of the machine, always stop the engine and remove the key from the ignition before leaving the operator's seat for any reason.

1. Park windrower on level ground and position windrower so drain plug (B) is at the lowest point.
2. Shut down the windrower and remove key from ignition.
3. Place a container (about 2 liters [2 quarts]) under the lower drain plug (B).
4. Remove plugs (A) and (B), and drain lubricant into container.
5. Dispose of oil in a manner that complies with local rules and regulations.

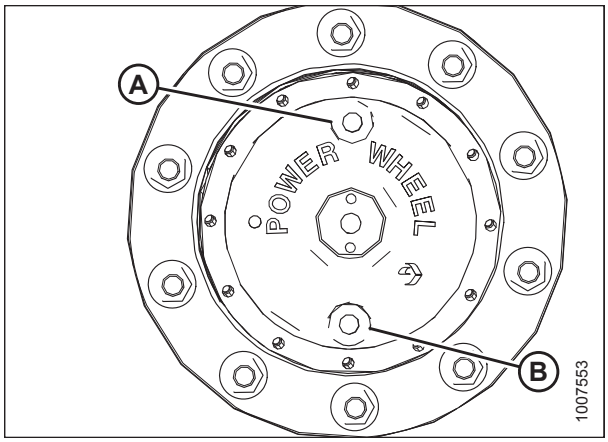

Figure 5.25: Drive Wheel

6. After the lubricant has drained completely, position the windrower so that ports (A) and (B) on wheel are horizontally level with the center of the hub (C) as shown.
7. Add lubricant. Refer to *5.9.4 Adding Wheel Drive Lubricant, page 312*.
8. Reinstall all plugs.

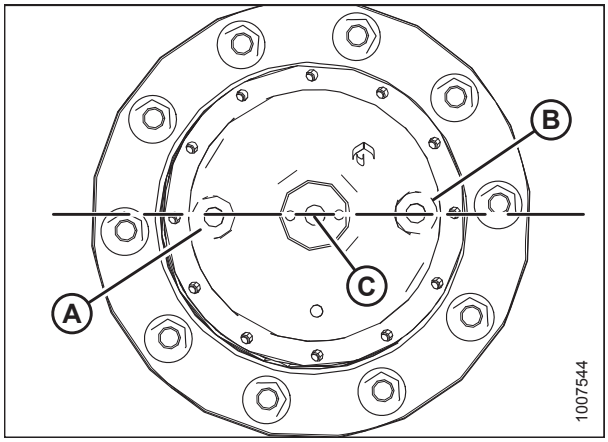

Figure 5.26: Drive Wheel

5.5.8 Return Oil Filter

The return filter removes particulate contaminants from the return oil from the fan drive, lift circuits, and the drive circuits. It must be changed after the first 50 hours and then at 500-hour intervals. Follow the service schedule on the Harvest Performance Tracker (HPT) display.

Removing Return Oil Filter

WARNING

To avoid bodily injury or death from unexpected startup of the machine, always stop the engine and remove the key from the ignition before leaving the operator's seat for any reason.

DANGER

Avoid high-pressure fluids. Escaping fluid can penetrate the skin causing serious injury.

1. Stop the engine and remove the key.

2. Locate the return filter (A) under the left platform.
3. Clean around head of the filter (A).
4. Place a container beneath the filter (A) to collect any oil that may leak out.
5. Unscrew filter (A) with a filter wrench.
6. Dispose of used oil and filter in a manner that complies with local rules and regulations.

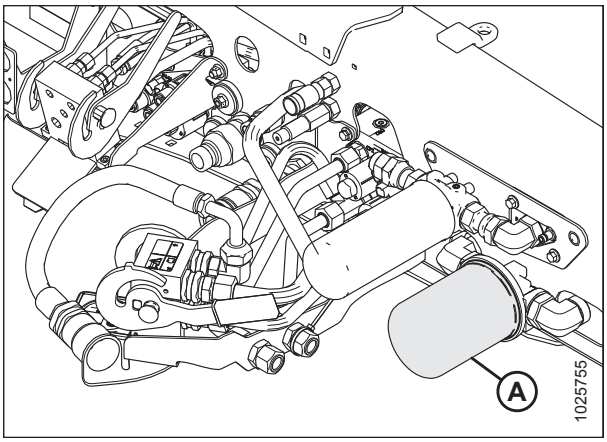

Figure 5.27: Return Filter

NOTE:

Image showing filter head removed to show component clarity.

7. Remove and discard gasket (C) from groove (B) in filter head (A).

NOTE:

Filter (D) is shown to provide context.

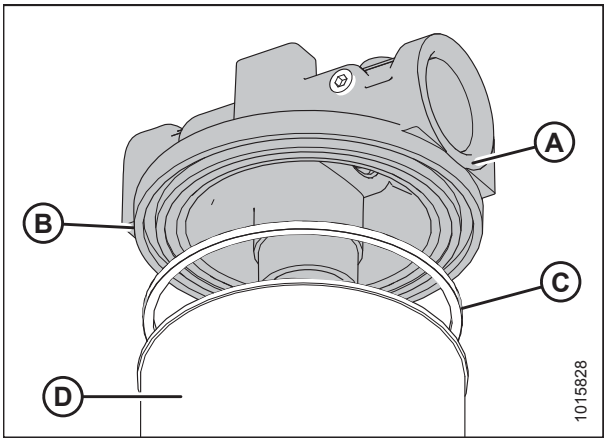

Figure 5.28: Return Filter

Installing Return Oil Filter

NOTE:

For filter specifications, refer to *5.1.4 Filter Part Numbers, page 263*.

NOTE:

Image shows filter head removed for component clarity.

1. Clean the gasket groove (B) in the filter head (A).
2. Apply a thin film of clean oil to the new filter gasket (C).

   IMPORTANT:

   Do **NOT** pre-fill filter before installation as this may potentially introduce unfiltered oil into the system.
3. Install new gasket (C) into the groove (B) in the filter head (A).
4. Screw the new filter (D) onto the filter head until the gasket just contacts the filter.

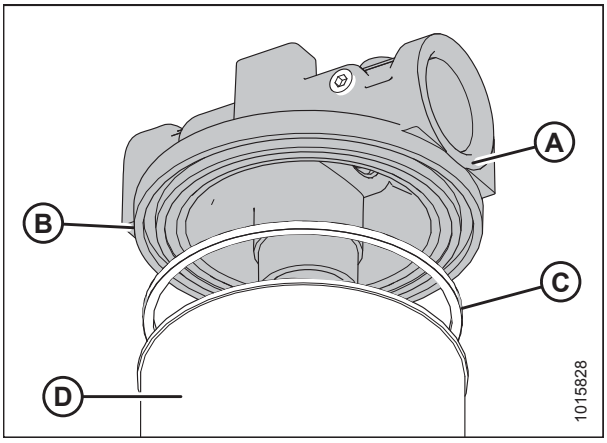

Figure 5.29: Return Filter

5. Tighten filter (A) an additional 3/4 turn by hand.

   IMPORTANT:

   Do **NOT** use a filter wrench to install oil filter. Overtightening can damage gasket and filter.

6. Check hydraulic fluid levels. For instructions, refer to *5.6.3 Checking Hydraulic Oil, page 284*. For capacity level, refer to the inside back cover.

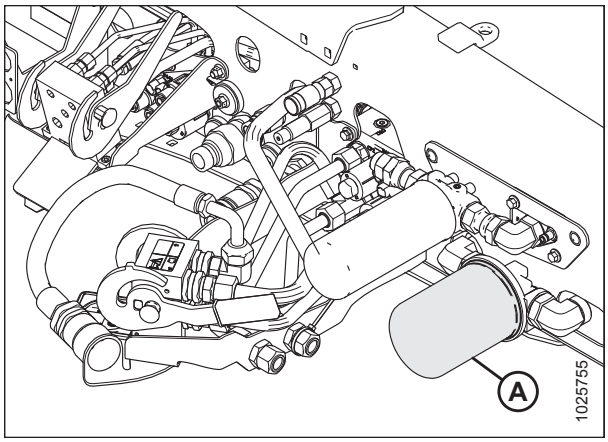

Figure 5.30: Return Filter

5.5.9 Charge Filter

The charge filter removes particulate contaminants from the oil before the oil is directed into the traction and header drive pumps. The oil maintains a positive pressure and is continuously supplied in these closed circuits during operation. The charge filter has a high-pressure bypass of 345 kPa (50 psi) that allows oil to bypass the filter element during cold temperatures and when the filter element is heavily loaded.

The charge filter must be replaced at regular intervals. The filter telltale is displayed on the Harvest Performance Tracker (HPT). The charge filter must be changed after first 50 hours and every 500 hours thereafter. Follow the service schedule on the HPT.

Refer to the following procedures to change the charge filter:

- *Removing Charge Filter, page 280*.
- *Installing Charge Filter, page 281*.

Removing Charge Filter

WARNING

To avoid bodily injury or death from unexpected startup of the machine, always stop the engine and remove the key from the ignition before leaving the operator's seat for any reason.

DANGER

Avoid high-pressure fluids. Escaping fluid can penetrate the skin causing serious injury.

1. Stop the engine and remove the key.
2. Open left platform. Refer to *5.4.1 Opening Platform, page 270*.
3. Clean around head of the filter.
4. Place a container beneath the filter to collect any oil that may leak out.
5. Unscrew filter (A) with a filter wrench.
6. Dispose of used oil and filter in a manner that complies with local rules and regulations.

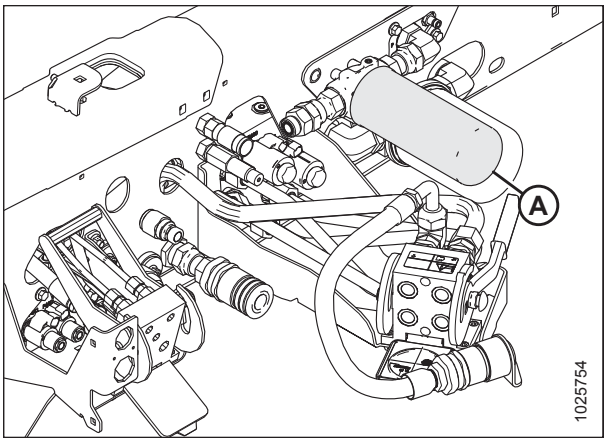

Figure 5.31: Charge Filter

Installing Charge Filter

NOTE:

For charge filter replacement part number, refer to *5.1.4 Filter Part Numbers, page 263*.

1. Clean the gasket surface of the filter head.
2. Apply a thin film of clean oil to the filter gasket.

   IMPORTANT:

   Do **NOT** pre-fill filter before installation as this may potentially introduce unfiltered oil into the system.
3. Clean the gasket surface of the filter head.
4. Apply a thin film of clean oil to the filter gasket.
5. Screw the new filter (A) onto the mount until the gasket just contacts the filter head.
6. Tighten filter an additional 1/2 turn by hand.

   IMPORTANT:

   Do **NOT** use a filter wrench to install oil filter. Overtightening can damage gasket and filter.
7. Check hydraulic fluid levels. Refer to *5.6.3 Checking Hydraulic Oil, page 284*. For capacity level, refer to the inside back cover.

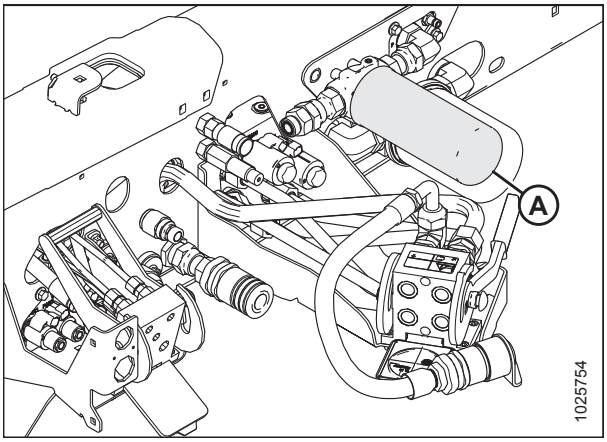

Figure 5.32: Charge Filter

5.6 Every 10 Hours or Daily

Complete the following maintenance tasks every 10 hours of operation or daily, whichever occurs first.

- Check engine oil level. Refer to *5.6.1 Checking Engine Oil Level, page 282*.
- Check engine coolant level. Refer to *5.6.5 Checking Engine Coolant Level, page 288*.
- Check hydraulic oil level. Refer to *5.6.3 Checking Hydraulic Oil, page 284*.
- Check tire inflation. Refer to *5.6.4 Checking Tire Pressures, page 285*.
- Check hydraulic hoses and lines for leaks. Refer to *5.6.6 Hoses and Lines, page 288*.
- Drain fuel filter water trap. Refer to *5.6.2 Fuel/Water Separator, page 283*.
- Clean radiator, hydraulic oil cooler, charge air cooler, and A/C condenser. Refer to *5.8.2 Cleaning Cooler Module, page 299*.
- Fill fuel tank. Refer to *5.6.7 Filling Fuel Tank, page 289*.
- Check diesel exhaust fluid (DEF) level. Refer to *3.17 Harvest Performance Tracker Display, page 77*.
- Check engine gearbox lubricant level. Refer to *5.6.9 Checking Engine Gearbox Lubricant Level and Adding Lubricant, page 291*.

5.6.1 Checking Engine Oil Level

Check engine oil level frequently and watch for any signs of leakage.

WARNING

To avoid bodily injury or death from unexpected startup of the machine, always stop the engine and remove the key from the ignition before leaving the operator's seat for any reason.

NOTE:

During the break-in period, a higher than usual oil consumption should be considered normal.

NOTE:

Oil can be checked without opening the hood.

1. Operate the engine at low idle and check for leaks at the filter and drain plug.
2. Stop the engine and remove the key. Wait about 5 minutes.
3. Remove dipstick (A) by turning it counterclockwise to unlock.
4. Wipe dipstick clean and reinsert it into engine.

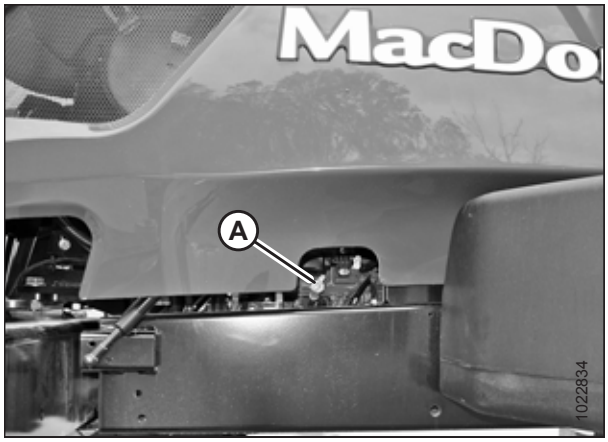

Figure 5.33: Dipstick Location

5. Remove dipstick again and check oil level. Oil level should be between LOW (L) and HIGH (H). If below the LOW mark, add oil.

   NOTE:

   Adding 1.9 liters (2 US quarts) will raise the level from LOW to HIGH. To add oil, refer to *Adding Engine Oil, page 283*.

6. Replace dipstick and turn it clockwise to lock.

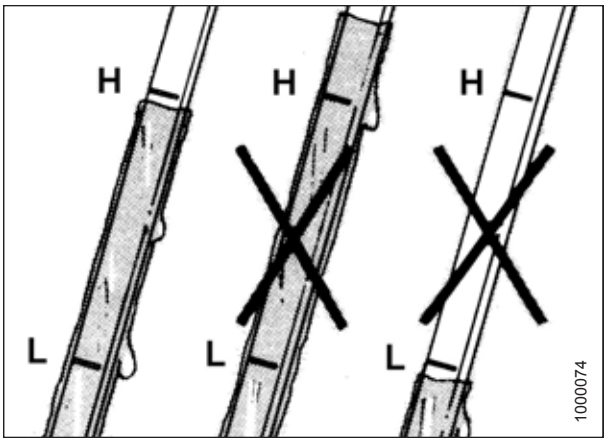

Figure 5.34: Engine Oil Level

Adding Engine Oil

WARNING

To avoid bodily injury or death from unexpected startup of the machine, always stop the engine and remove the key from the ignition before leaving the operator's seat for any reason.

1. Open the hood. For instructions, refer to *5.3.1 Opening Hood, page 268*.
2. Clean around filler cap (A) and remove by turning it counterclockwise.
3. Carefully pour in 14 liters (14.8 qts. U.S.) of new oil. A funnel is recommended to avoid spillage. Refer to the inside back cover for oil specifications.

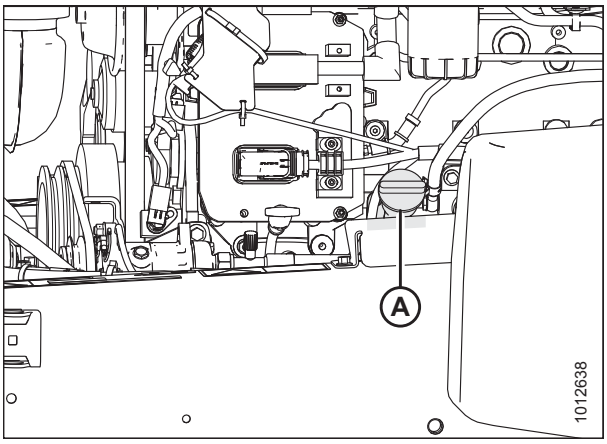

Figure 5.35: Oil Filler Cap

CAUTION

Do NOT fill above the HIGH mark.

4. Replace oil filler cap (A) and turn it clockwise until snug.
5. Check the oil level. For instructions, refer to *5.6.1 Checking Engine Oil Level, page 282*.
6. Close the hood. For instructions, refer to *5.3.2 Closing Hood, page 269*.

5.6.2 Fuel/Water Separator

A fuel/water separator is incorporated into the primary fuel filter. The separator is equipped with a drain and a sensor that detects water in the fuel and displays an alert on the HPT display. Drain the water and sediment from the separator daily or at any time the Water In Fuel (WIF) light illuminates on the HPT display.

To remove water from the fuel system, refer to *Removing Water from Fuel System, page 284*.

Removing Water from Fuel System

WARNING

To avoid bodily injury or death from unexpected startup of the machine, always stop the engine and remove the key from the ignition before leaving the operator's seat for any reason.

1. Stop the engine and remove the key.
2. Open the hood. For instructions, refer to *5.3.1 Opening Hood, page 268*.
3. Place a container under the filter (A) to catch spilled fluid.
4. Turn drain valve (C) by hand 1 1/2 to 2 turns counterclockwise until draining occurs.
5. Drain the filter sump of water and sediment until clear fuel is visible.
6. Turn the valve clockwise to close the drain.
7. Dispose of fluid safely.
8. Close the hood. For instructions, refer to *5.3.2 Closing Hood, page 269*.

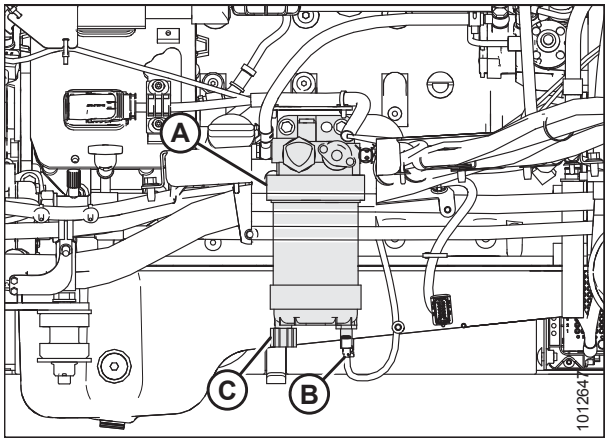

Figure 5.36: Fuel System

A - Primary Fuel Filter
B - Water in Fuel (WIF) Sensor
C - Drain Valve

5.6.3 Checking Hydraulic Oil

Hydraulic oil is used to transmit force under high pressure. The oil also lubricates, cools, and cleans the system, thus the cleanliness and quality of the oil is highly important to ensure long system life. It is extremely important to avoid contamination when service and regular maintenance is performed.

WARNING

To avoid bodily injury or death from unexpected startup of the machine, always stop the engine and remove the key from the ignition before leaving the operator's seat for any reason.

WARNING

Avoid high-pressure fluids. Escaping fluid can penetrate the skin causing serious injury.

1. Park windrower on level ground, and lower header and reel so that lift cylinders are fully retracted.
2. Stop the engine and remove the key.

3. Locate the sight glass (A) on the right side of tank. It indicates the oil level and any signs of contamination.

   NOTE:

   No oil in the sight glass indicates that oil level is below the add mark on the dipstick. The sight glass is viewable with hood open or closed.

4. Ensure hydraulic oil level is between the low and full indicator marks.

5. If more oil is required to maintain the level between low and full indicator marks, refer to *5.12.3 Filling Hydraulic Oil, page 331*.

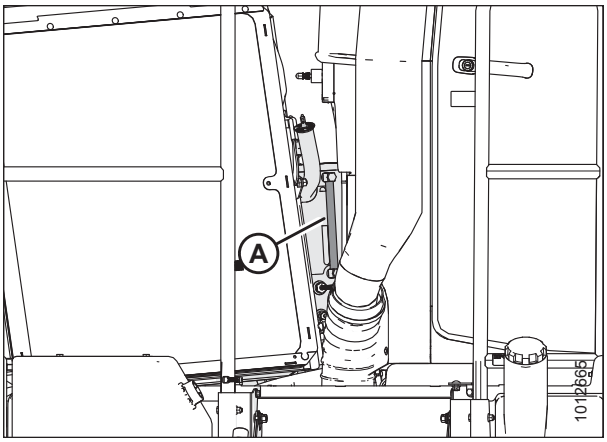

Figure 5.37: Hydraulic Oil Sight Glass

5.6.4 Checking Tire Pressures

Check tire pressures with a gauge.

Caster Wheel Tires: Inflate all caster wheel tires (B) to 110 kPa (16 psi).

Drive Wheel Tires: For optimal performance, drive wheel (A) tire pressures are determined by tire type, header size, and additional options. Refer to the following table:

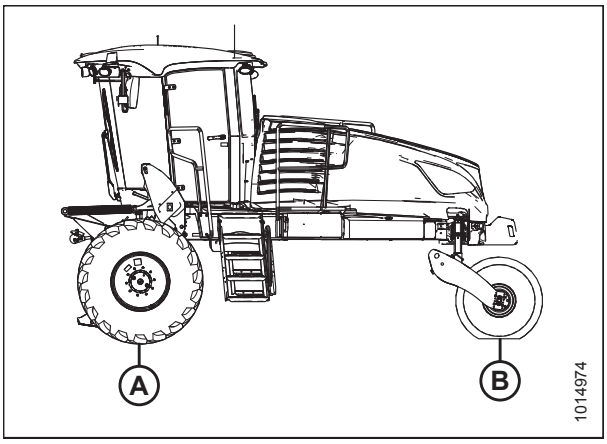

Figure 5.38: Windrower Tires

Table 5.4 Drive Tire Inflation Specifications

Header Type	Description	Installed Options	Weight Kit	Tire Type	Pressure kPa (psi)
Draper Header					
D115X single reel	4.6 m (15 ft.), double knife, timed	—	—	**Bar**	138 (20)
D115X single reel	4.6 m (15 ft.), double knife, timed	—	—	**Turf**	138 (20)
D120X single reel	6.1 m (20 ft.), double knife, timed	—	—	**Bar**	138 (20)
D120X single reel	6.1 m (20 ft.), double knife, timed	—	—	**Turf**	138 (20)
D125X single reel	7.6 m (25 ft.), double knife, timed	—	—	**Bar**	159 (23)

Table 5.4 Drive Tire Inflation Specifications (continued)

Header Type	Description	Installed Options	Weight Kit	Tire Type	Pressure kPa (psi)
D125X single reel	7.6 m (25 ft.), double knife, timed	—	—	**Turf**	159 (23)
D130XL single reel	9.1 m (30 ft.), double knife, timed	Transport	1	**Bar**	200 (29)
D130XL single reel	9.1 m (30 ft.), double knife, timed	Transport	1	**Turf**	241 (35)
D130XL single reel	9.1 m (30 ft.), double knife, timed	Transport + upper cross auger + vertical knives	1	**Bar**	241 (35)
D130XL single reel	9.1 m (30 ft.), double knife, timed	Transport + upper cross auger + vertical knives	1	**Turf**	241 (35)
D135XL single reel	10.7 m (35 ft.), double knife, untimed	Base	2	**Bar**	200 (29)
D135XL single reel	10.7 m (35 ft.), double knife, untimed	Base	2	**Turf**	241 (35)
D135XL single reel	10.7 m (35 ft.), double knife, untimed	Transport	2	**Bar**	241 (35)
D135XL single reel	10.7 m (35 ft.), double knife, untimed	Transport	2	**Turf**	241 (35)
D135XL single reel	10.7 m (35 ft.), double knife, untimed	Transport + upper cross auger + vertical knives	3	**Bar**	241 (35)
D135XL single reel	10.7 m (35 ft.), double knife, untimed	Transport + upper cross auger + vertical knives	3	**Turf**	241 (35)
D135XL double reel	10.7 m (35 ft.), double knife, untimed	Base	2	**Bar**	221 (32)
D135XL double reel	10.7 m (35 ft.), double knife, untimed	Base	2	**Turf**	241 (35)
D135XL double reel	10.7 m (35 ft.), double knife, untimed	Transport	2	**Bar**	241 (35)
D135XL double reel	10.7 m (35 ft.), double knife, untimed	Transport	2	**Turf**	241 (35)
D135XL double reel	10.7 m (35 ft.), double knife, untimed	Transport + upper cross auger + vertical knives	3	**Bar**	283 (41)
D135XL double reel	10.7 m (35 ft.), double knife, untimed	Transport + upper cross auger + vertical knives	3	**Turf**	241 (35)
D140XL double reel	12.2 m (40 ft.), double knife, untimed	Base	2	**Bar**	241 (35)
D140XL double reel	12.2 m (40 ft.), double knife, untimed	Base	2	**Turf**	241 (35)
D140XL double reel	12.2 m (40 ft.), double knife, untimed	Transport	2	**Bar**	241 (35)
D140XL double reel	12.2 m (40 ft.), double knife, untimed	Transport	2	**Turf**	241 (35)

Table 5.4 Drive Tire Inflation Specifications (continued)

Header Type	Description	Installed Options	Weight Kit	Tire Type	Pressure kPa (psi)
D140XL double reel	12.2 m (40 ft.), double knife, untimed	Transport + upper cross auger + vertical knives	3	**Bar**	283 (41)
D140XL double reel	12.2 m (40 ft.), double knife, untimed	Transport + upper cross auger + vertical knives	3	**Turf**	241 (35)
D145XL double reel	13.7 m (45 ft.), double knife, untimed	Base	2	**Bar**	241 (35)
D145XL double reel	13.7 m (45 ft.), double knife, untimed	Base	2	**Turf**	241 (35)
D145XL double reel	13.7 m (45 ft.), double knife, untimed	Transport	3	**Bar**	262 (38)
D145XL double reel	13.7 m (45 ft.), double knife, untimed	Transport	3	**Turf**	241 (35)
D145XL double reel	13.7 m (45 ft.), double knife, untimed	Transport + upper cross auger + vertical knives	3	**Bar**	283 (41)
D145XL double reel	13.7 m (45 ft.), double knife, untimed	Transport + upper cross auger + vertical knives	3	**Turf**	241 (35)
Disc Header					
R85	4.9 m (16 ft.)	Base	—	**Bar** or **Turf**	200 (29)
R113	4 m (13 ft.)	No Conditioner	—	**Bar** or **Turf**	138 (20)
R113	4 m (13 ft.)	Steel or Poly Roll	—	**Bar**	179 (26)
R113	4 m (13 ft.)	Steel or Poly Roll	—	**Turf**	159 (23)
Auger Header					
A40DX	4.9 m (16 ft.)	—	—	**Bar**	200 (29)
A40DX	4.9 m (16 ft.)	—	—	**Turf**	200 (29)
A40DX GSS	4.9 m (16 ft.) (Grass Seed)	—	—	**Bar**	159 (23)
A40DX GSS	4.9 m (16 ft.) (Grass Seed)	—	—	**Turf**	159 (23)
A40DX	5.5 m (18 ft.)	—	—	**Bar**	200 (29)
A40DX	5.5 m (18 ft.)	—	—	**Turf**	220 (32)

5.6.5 Checking Engine Coolant Level

Check coolant level in the pressurized coolant tank daily.

WARNING

To avoid bodily injury or death from unexpected startup of the machine, always stop the engine and remove the key from the ignition before leaving the operator's seat for any reason.

NOTE:

Ensure the engine has cooled down prior to checking.

1. Stop the engine and remove the key.
2. Open the hood. For instructions, refer to *5.3.1 Opening Hood, page 268*.
3. Locate the coolant tank.
4. The tank has a MAX and MIN COLD line marker. Check to make sure the coolant level is at the MAX COLD line (A). If it is too low, add coolant. For specifications, refer to the inside back cover.

   NOTE:

   When checking coolant level, use the MAX COLD line on the side of tank that faces cab for an accurate measurement.
5. Close the hood. For instructions, refer to *5.3.2 Closing Hood, page 269*.

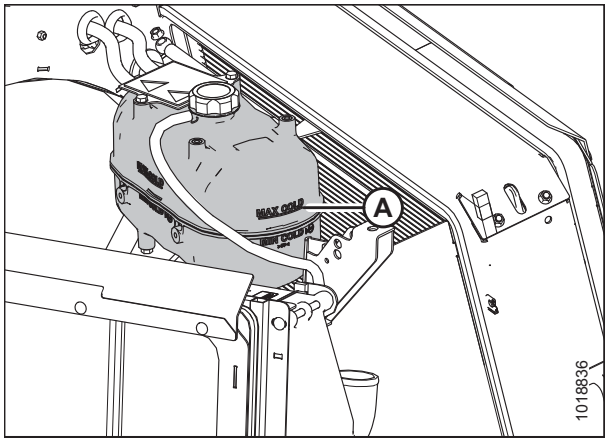

Figure 5.39: Coolant Tank

5.6.6 Hoses and Lines

Check hydraulic hoses and lines daily for signs of leaks.

WARNING

- **Avoid high-pressure fluids. Escaping fluid can penetrate the skin causing serious injury.**
- **Relieve pressure before disconnecting hydraulic lines. Tighten all connections before applying pressure.**
- **Keep hands and body away from pin-holes and nozzles which eject fluids under high pressure.**
- **If ANY fluid is injected into the skin, it must be surgically removed within a few hours by a Doctor familiar with this type of injury or gangrene may result.**
- **Use a piece of cardboard or paper to search for leaks.**
- **Any service components must be genuine MacDon parts.**
- **All connections must be properly torqued. Refer to *8.1 Torque Specifications, page 405*.**



Figure 5.40: Hydraulic Pressure Hazard

IMPORTANT:

- Keep hydraulic coupler tips and connectors clean. Dust, dirt, water, and foreign material are the major causes of hydraulic system damage.
- DO **NOT** attempt to service hydraulic system in the field. Precision fits require WHITE ROOM CARE during overhaul.

5.6.7 Filling Fuel Tank

The symbol inside the fuel gauge on the Harvest Performance Tracker (HPT) display will signal the Operator when the fuel level is low. Fill fuel tank daily, preferably at the end of the day's operation to help prevent condensation in the tank.

WARNING

To avoid bodily injury or death from unexpected startup of the machine, always stop the engine and remove the key from the ignition before leaving the operator's seat for any reason.

WARNING

- **To avoid personal injury or death from explosion or fire, do NOT smoke or allow flame or sparks near fuel tank when refueling.**
- **NEVER refuel the windrower when the engine is hot or running.**
- **To avoid electric discharge and the risk of a fire or explosion, ensure that the fuel delivery system is properly bonded and grounded. A bonded fuel delivery system has an electrically conductive and unbroken connection between all components of the fuel delivery system (fuel supply tank, transfer pump, transfer hose, nozzle, and others). A wire connection from the fuel delivery system to the machine chassis will equalize the static electric potential between the two machines, further reducing the chance of a static electric discharge. A properly grounded fuel delivery system has an electrically conductive connection from the fuel delivery system tank to earth ground to allow static and electrical charge dissipation.**

IMPORTANT:

Do **NOT** allow tank to empty. Running out of fuel can cause air locks and/or contamination of the fuel system. Refer to *Priming Fuel System, page 318*.

1. Stop windrower and remove the ignition key.
2. Clean the area around the fuel filler cap (A).
3. Turn fuel filler cap (A) counterclockwise until loose. Remove cap.
4. Fill tank with approved fuel. For fuel type and quantity, refer to the inside back cover.

   IMPORTANT:

   Do **NOT** completely fill the tank as space is required for expansion. A filled tank could overflow if exposed to a rise in temperature, such as direct sunlight.
5. Replace fuel tank filler cap (A), and turn cap clockwise until it clicks.

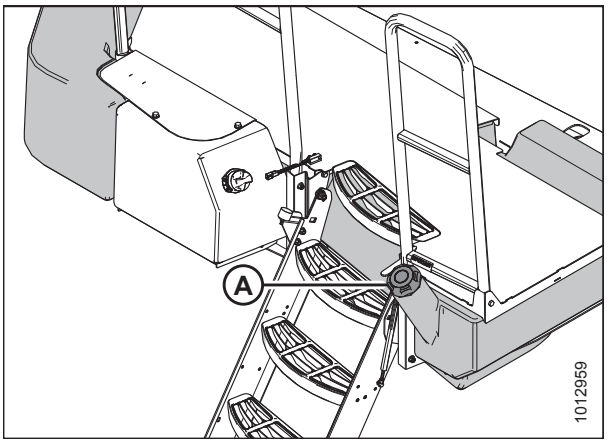

Figure 5.41: Fuel Tank Filler Cap

5.6.8 Filling the Diesel Exhaust Fluid Tank

The symbol inside the diesel exhaust fluid (DEF) gauge on the Harvest Performance Tracker (HPT) display will signal the Operator when DEF level is low.

WARNING

To avoid bodily injury or death from unexpected startup of the machine, always stop the engine and remove the key from the ignition before leaving the operator's seat for any reason.

1. Stop the engine and remove the key.
2. Clean around filler cap (A).
3. Turn cap (A) counterclockwise until loose and remove cap.

   NOTE:

   Filler cap for DEF tank is blue and the nozzle dispenser is smaller than that of the fuel tank.

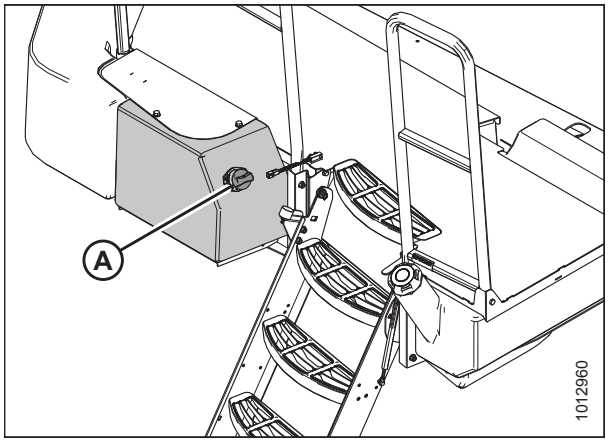

Figure 5.42: DEF Tank

CAUTION

Avoid contact with eyes. In case of contact, rinse immediately with water for 15 minutes.

4. Fill tank with approved DEF. Refer to the inside back cover..

   IMPORTANT:

   DEF is corrosive. Spilled DEF must be contained and absorbed by non-combustible absorbent material like sand, and then shovelled to a suitable container for disposal. If spilled on tank or any surface of the vehicle, rinse thoroughly with water.

   IMPORTANT:

   If the windrower temperature is going to be below 0°C (32°F), do **NOT** fill the DEF tank more than 75% full. When freezing, the DEF fluid will expand by approximately 7%. For storage information, refer to *5.1.1 Storing Lubricants and Fluids, page 261*.

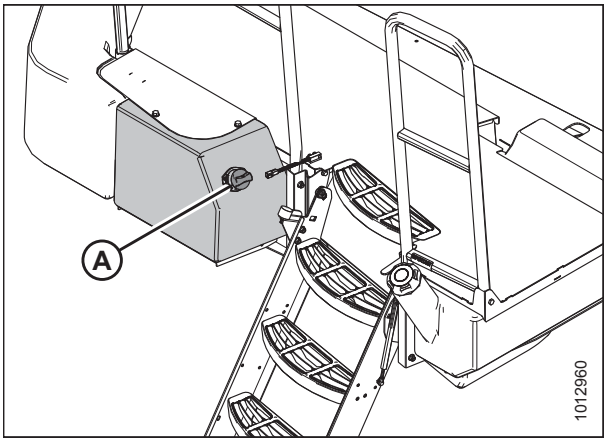

Figure 5.43: DEF Tank

5. Replace filler cap (A) and turn clockwise until tight.

5.6.9 Checking Engine Gearbox Lubricant Level and Adding Lubricant

Check lubricant level every day.

WARNING

To avoid bodily injury or death from unexpected startup of the machine, always stop the engine and remove the key from the ignition before leaving the operator's seat for any reason.

CAUTION

Park on a flat, level surface with the header on the ground, the ground speed lever in PARK position, and the steering wheel in locked position (centered). Wait for the HPT to beep and display a red P symbol to confirm the park brakes have engaged.

1. Park the windrower on level ground, shut down engine, and remove key.

   NOTE:

   If engine is hot, wait 10 minutes before checking level to allow lubricant to cool and settle in the sump.

2. Open hood.

3. Remove dipstick (A) and check lubricant level.

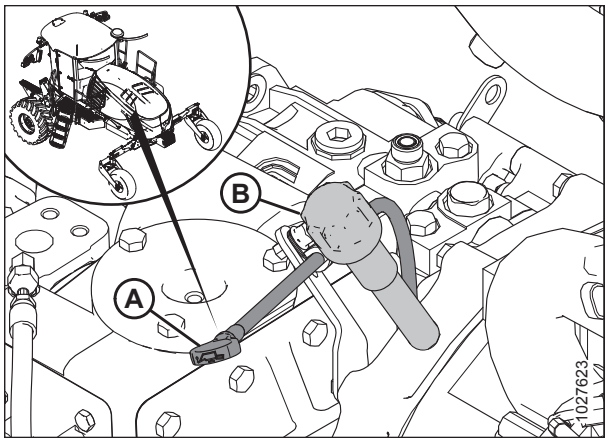

Figure 5.44: Gearbox Lubricant Dipstick

4. If lubricant level is at or below the ADD mark, remove breather (B in previous illustration) and add gearbox lubricant until it is between the ADD (A) and FULL (B) marks on the dipstick. For lubrication specifications, refer to the inside back cover.

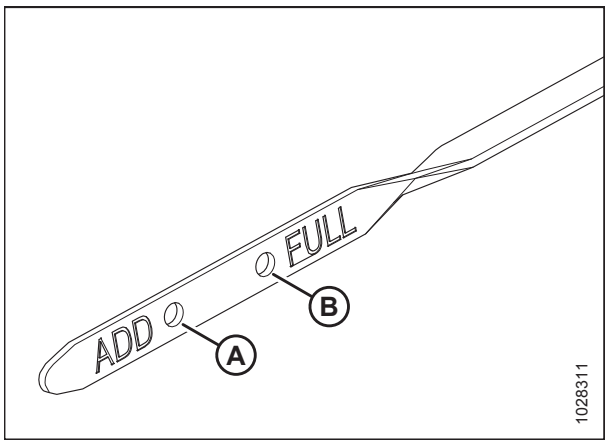

Figure 5.45: Bottom End of Dipstick

5.7 Every 50 Hours

Complete the following maintenance tasks every 50 hours of operation.

- Clean the cab fresh air intake filter. Refer to *5.7.1 Fresh Air Intake Filter, page 293*.
- Grease caster bearings and pivots. Refer to *5.7.2 Greasing the Windrower, page 296*.
- Grease top lift link pivots. Refer to *5.7.2 Greasing the Windrower, page 296*.

5.7.1 Fresh Air Intake Filter

The fresh air intake filter is located outside the lower right rear of the cab (A), and should be serviced every 50 hours under normal conditions and more frequently in severe conditions. Refer to *5.1.4 Filter Part Numbers, page 263* for the appropriate part number.

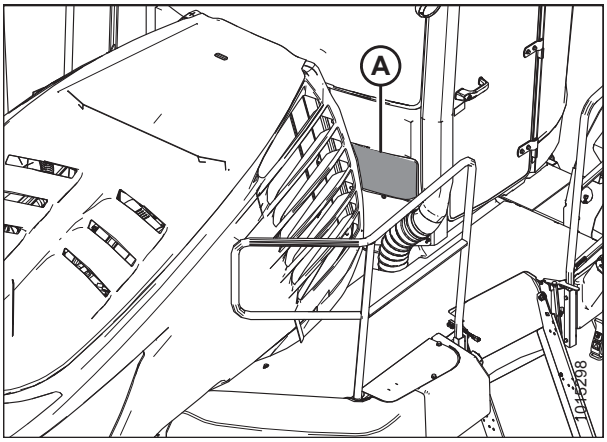

Figure 5.46: Fresh Air Intake Filter Location

Removing Fresh Air Intake Filter

WARNING

To avoid bodily injury or death from unexpected startup of the machine, always stop the engine and remove the key from the ignition before leaving the operator's seat for any reason.

1. Stop the engine and remove the key.
2. Open hood. For instructions, refer to *5.3.1 Opening Hood, page 268*.
3. Rotate latch (A) counterclockwise to loosen, and remove fresh air filter door (B).

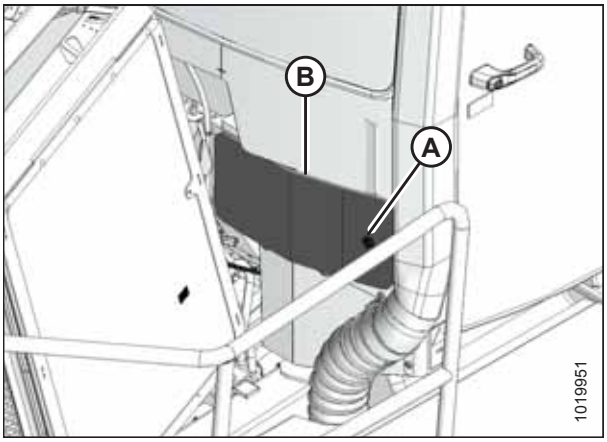

Figure 5.47: Fresh Air Filter Door

4. Turn knob (A) counterclockwise, and remove it.
5. Remove air filter retainer (B).
6. Remove air filter (C).

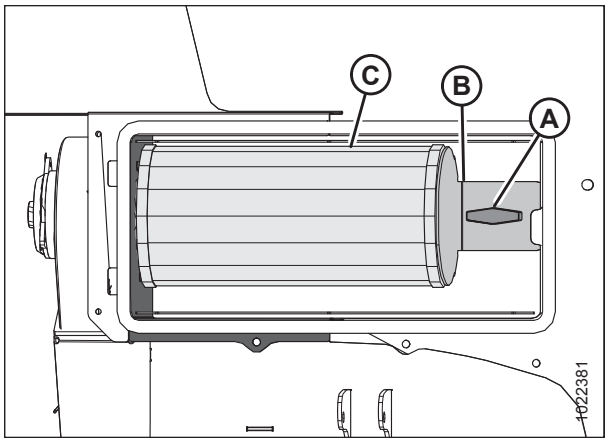

Figure 5.48: Fresh Air Intake Filter

Inspecting and Cleaning Fresh Air Intake Filter Element

1. Tap the sides of the filter element gently to loosen dirt. Do **NOT** tap element against a hard surface.
2. Using a dry element cleaner gun, clean element with compressed air.

   IMPORTANT:

   Air pressure must **NOT** exceed 414 kPa (60 psi). Do **NOT** direct air against outside of element, as dirt might be forced through to the inside.
3. Hold the air nozzle next to the filter element's inner surface and move up and down the pleats.
4. Repeat previous steps to remove additional dirt as required.
5. Hold a bright light inside the element and check carefully for holes. Discard any element that shows the slightest hole.
6. Check outer screen for dents. Vibration would quickly wear a hole in the filter.
7. Check filter gasket for cracks, tears, or other signs of damage. If gasket is damaged or missing, replace element.

Installing Fresh Air Intake Filter

Refer to *5.1.4 Filter Part Numbers, page 263* for part number.

1. Clean interior of fresh air intake box (A).

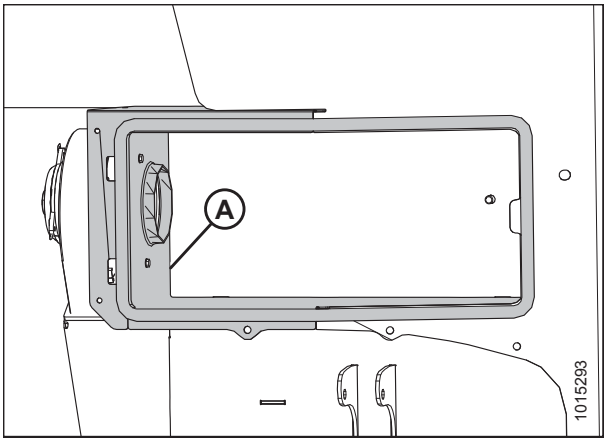

Figure 5.49: Fresh Air Intake Box

2. Install air filter (A) onto fresh air box panel (B).

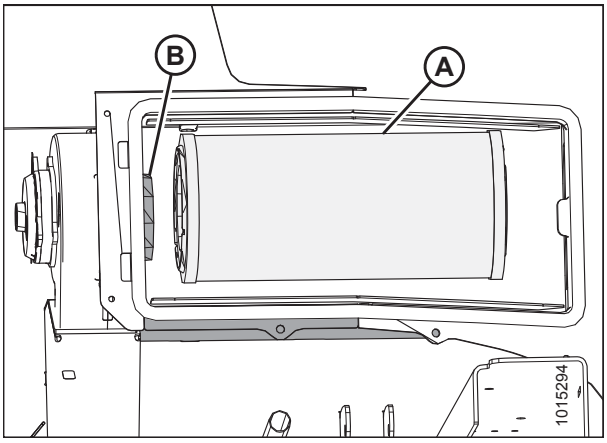

Figure 5.50: Fresh Air Intake Filter

3. Secure air filter (C) with retainer (B).
4. Install knob (A), and turn clockwise to tighten.

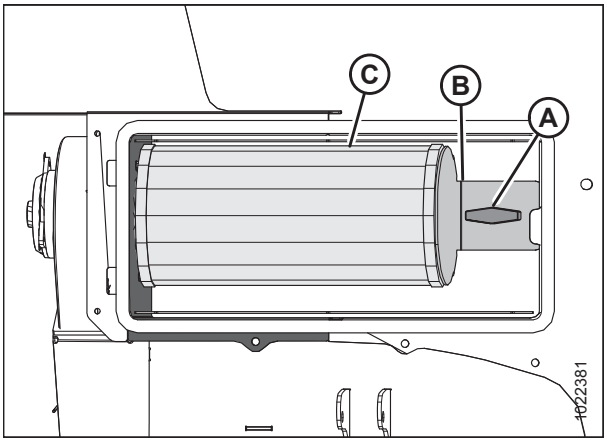

Figure 5.51: Fresh Air Intake Filter

5. Insert tabs on fresh air filter door into slots on fresh air box, and rotate latch (A) clockwise to secure door (B).

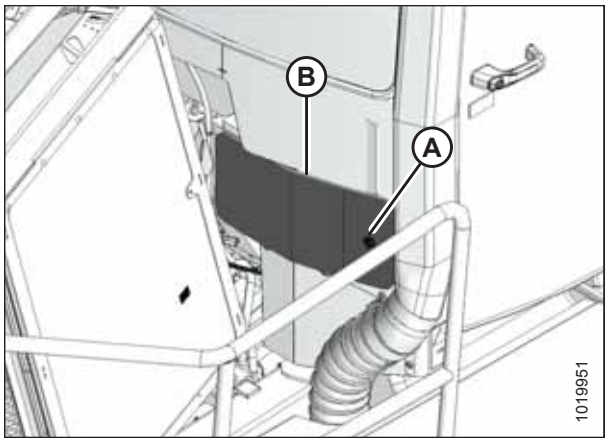

Figure 5.52: Fresh Air Intake Filter Cover

5.7.2 Greasing the Windrower

WARNING

To avoid personal injury, before servicing the windrower or opening drive covers, follow procedures in the SAFETY section. Refer to *1 Safety, page 1*.

The greasing points are marked on the machine by decals showing a grease gun and grease interval in hours of operation.

Log hours of operation and use the Maintenance Checklist provided to keep a record of scheduled maintenance. Refer to *5.2.2 Maintenance Schedule/Record, page 265*.

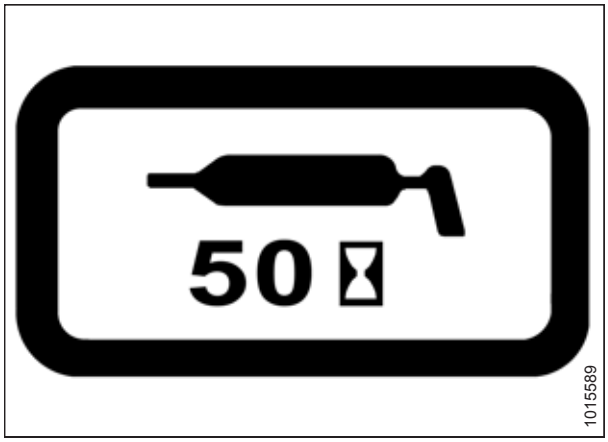

Figure 5.53: Greasing Interval Decal

Greasing Procedure

WARNING

To avoid bodily injury or death from unexpected startup of the machine, always stop the engine and remove the key from the ignition before leaving the operator's seat for any reason.

1. To avoid injecting dirt and grit, wipe grease fitting with a clean cloth before greasing.
2. Inject grease through fitting with grease gun until grease overflows fitting, except where noted. Refer to the inside back cover.
3. Leave excess grease on fitting to keep out dirt.
4. Replace any loose or broken fittings immediately.
5. If fitting will **NOT** take grease, remove and clean thoroughly. Also clean grease passageway. Replace fitting if necessary.

Grease Points

Figure 5.54: Grease Points

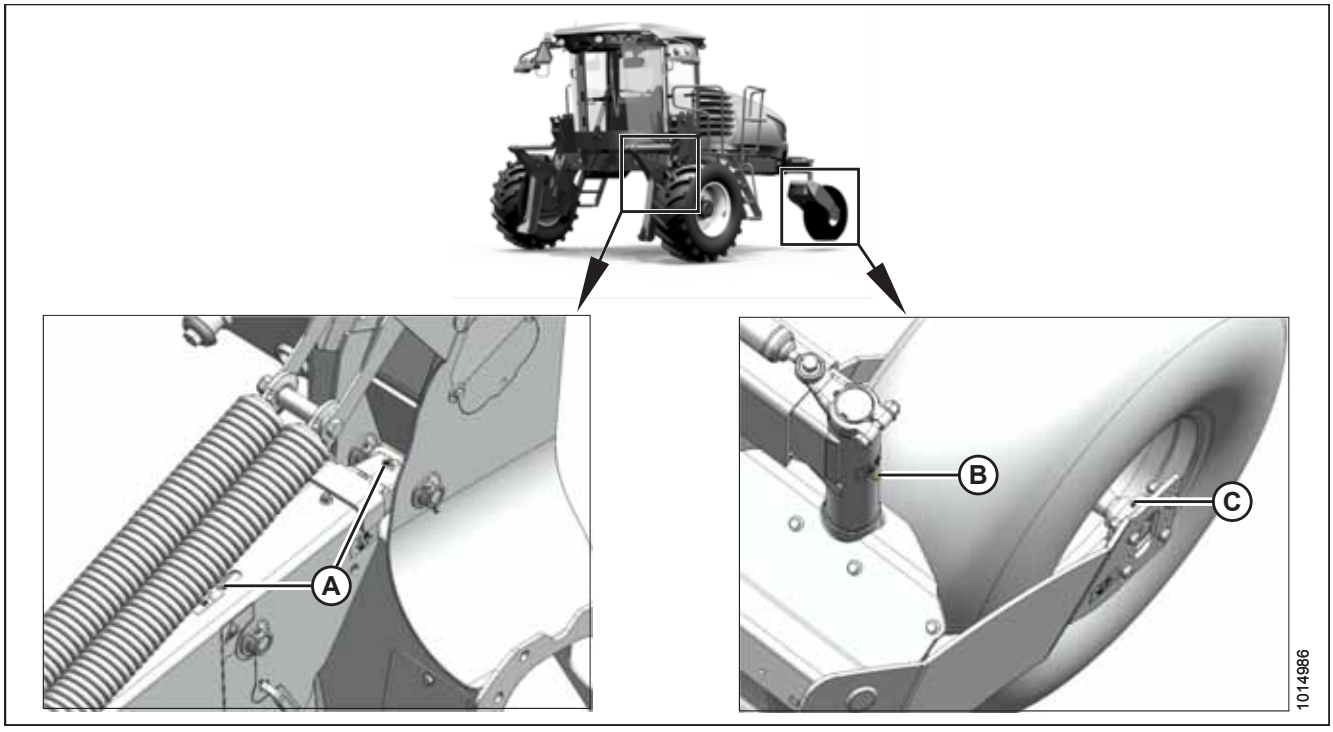

A - Top Link (2 Places) (Both Sides) **B - Caster Pivot (Both Sides)** **C - Caster Wheel Hub (Both Sides)**[17]

17. Do **NOT** over grease. Use 1 pump of grease.

5.8 Every 100 Hours

Complete the following maintenance tasks every 100 hours of operation.

- Clean cab air return filter. Refer to *5.8.1 Servicing Return Air Filter, page 298*.
- Clean radiator, hydraulic oil cooler, charge air cooler, and A/C condenser. Refer to *5.8.2 Cleaning Cooler Module, page 299*.

5.8.1 Servicing Return Air Filter

The return air filter is located behind the operator's seat on the cab wall and should be serviced every 100 hours.

1. Unscrew two knobs (A) attaching cover and filter to cab wall, and remove cover and filter assembly (B).

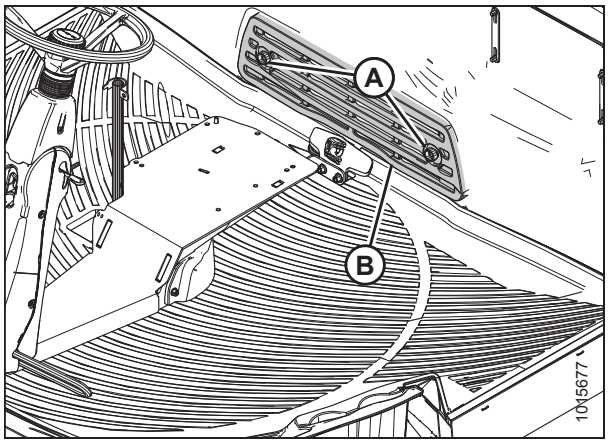

Figure 5.55: Return Air Filter

2. Separate the filter (B) from the cover (A).
3. Clean the electrostatic filter as follows:
   a. Mix a solution of warm water and detergent in a suitable container so that the filter (B) can soak for a few minutes.
   b. Agitate to flush out the dirt.
   c. Rinse with clean water, and then dry with compressed air.
   d. Inspect filter for damage, separation, and holes. Replace if damaged. Refer to *5.1.4 Filter Part Numbers, page 263* for part number.
4. Assemble the cleaner (B) and cover (A), and position on cab wall over opening.

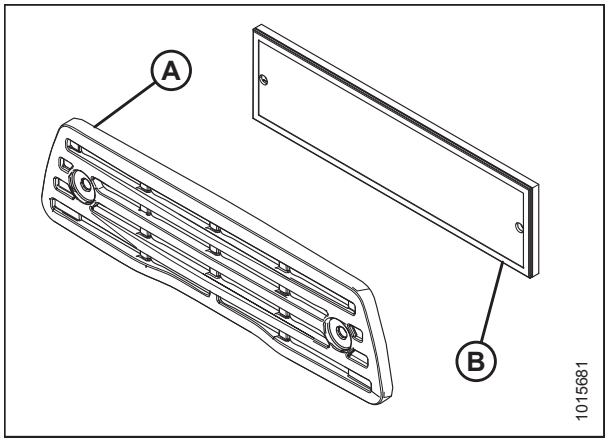

Figure 5.56: Return Air Filter

5. Secure filter assembly (B) to cab wall with knobs (A).

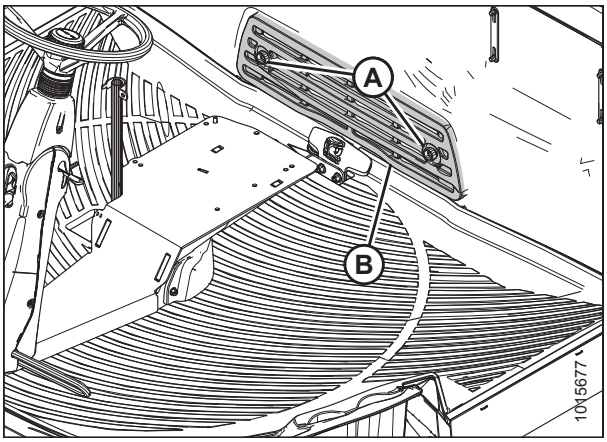

Figure 5.57: Return Air Filter

5.8.2 Cleaning Cooler Module

The cooling module should be cleaned every 100 hours of operation. Daily cleaning may be required if operating in heavy crop conditions.

WARNING

To avoid bodily injury or death from unexpected startup of the machine, always stop the engine and remove the key from the ignition before leaving the operator's seat for any reason.

1. Stop the engine and remove the key.
2. Open the engine compartment hood. For instructions, refer to *5.3.1 Opening Hood, page 268*. The maintenance platforms can remain in the forward position.
3. Proceed to cleaning procedures. Refer to *Cleaning Right Cooling Module, page 302* or *Cleaning Left Cooling Module, page 299*.

Cleaning Left Cooling Module

This procedure is for cleaning the engine radiator, air conditioning condenser, and screen in the left cab-forward cooling module.

1. At left cab-forward side cooler module, push latch (A) and open engine radiator door (B).

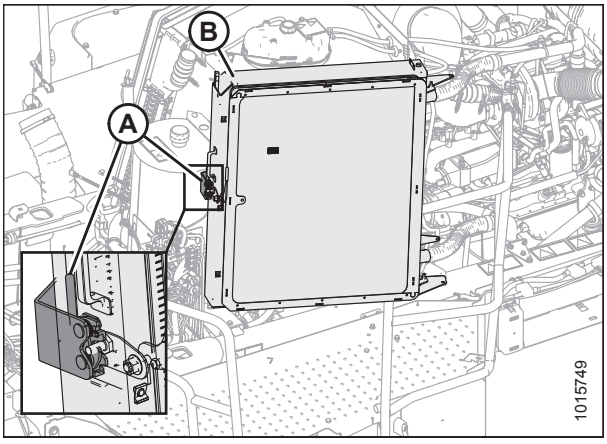

Figure 5.58: Left Cooler Module

2. Lower lever (A) to release screen/condenser door (B) from radiator (C), and open screen/condenser door (B).

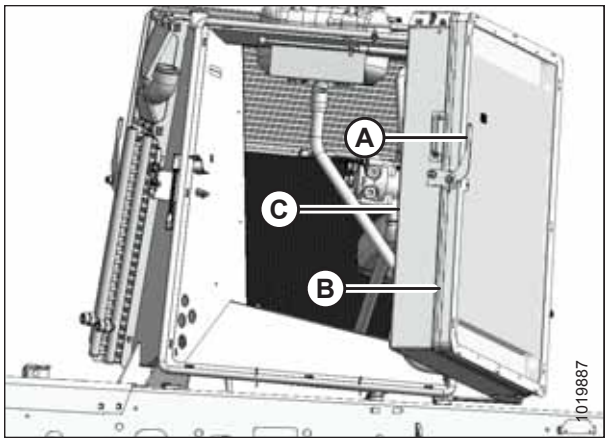

Figure 5.59: Left Side Coolers

3. Pull lever (A) up to partially-open condenser (B) away from screen (C).

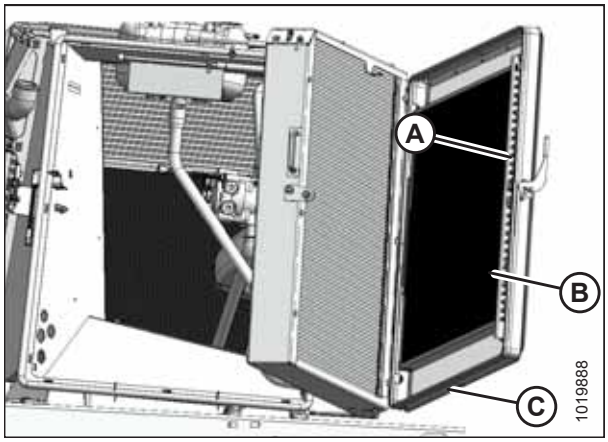

Figure 5.60: Left Side Coolers

4. Secure condenser (A) with bracket (B).
5. Clean debris from radiator (D), condenser (A), and screen (C) with compressed air.

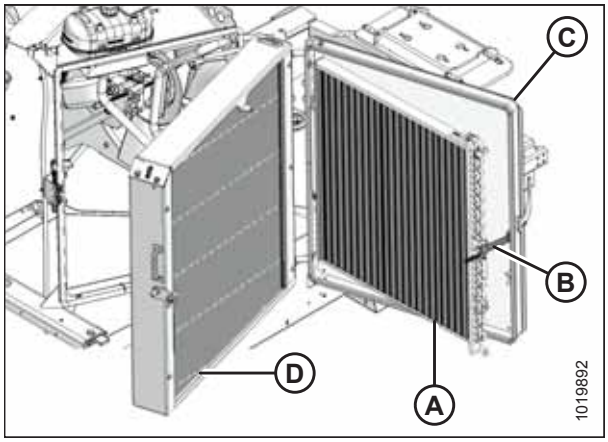

Figure 5.61: Left Side Coolers

6. Close condenser (B) into screen (C) and secure with bracket (A).

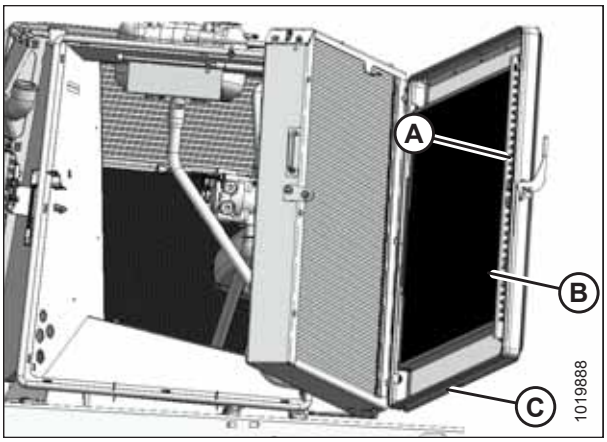

Figure 5.62: Left Side Coolers

7. Close screen/condenser door (B) onto radiator door (C) and secure with lever (A).

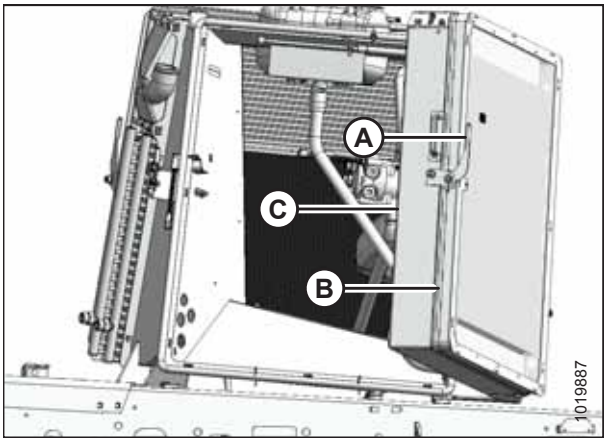

Figure 5.63: Left Side Coolers

8. Close radiator door (B) and push until latch (A) secures door (B).

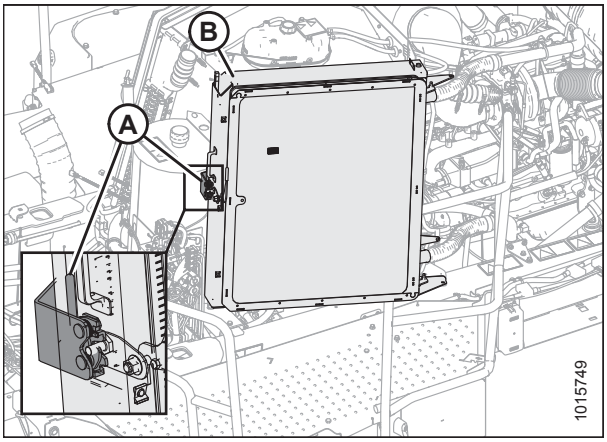

Figure 5.64: Left Cooler Module

Cleaning Right Cooling Module

This procedure is for cleaning the coolers at the right cab-forward side of the windrower.

1. At the right (cab-forward) side cooler module, pull latch handle (A) and open screen/case drain cooler door (B).

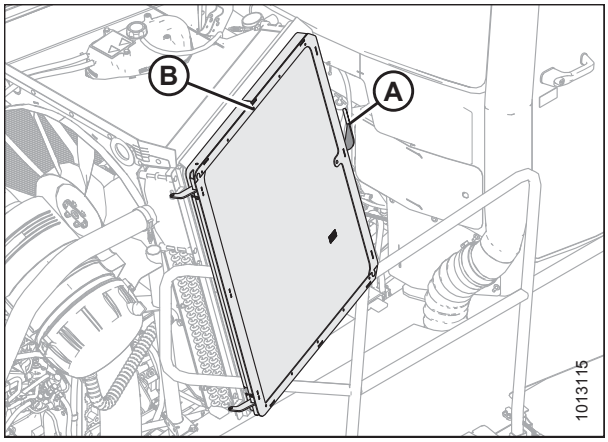

Figure 5.65: Right Cooler Module

2. At the left (cab-forward) side cooler module, push latch (A) and open engine radiator door (B) to allow access inside cooler module.

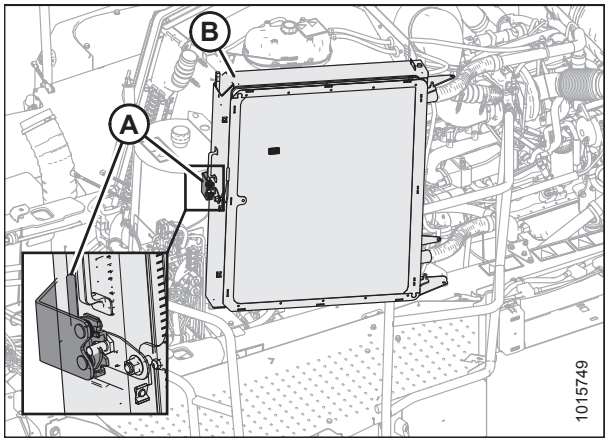

Figure 5.66: Engine Radiator Door

3. Use compressed air to clean debris from inside the cooler box (A), charge air cooler (B), and hydraulic oil cooler (C).

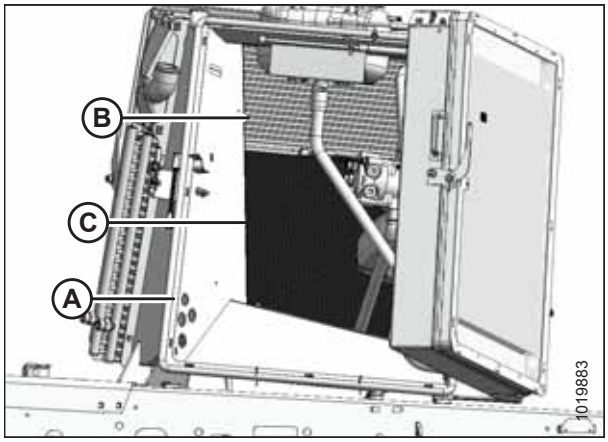

Figure 5.67: View Inside Module from Left Side

4. At right side cooler module, with screen/case drain cooler (A) open, pull lever (B) to partially open cooler (C) away from screen.

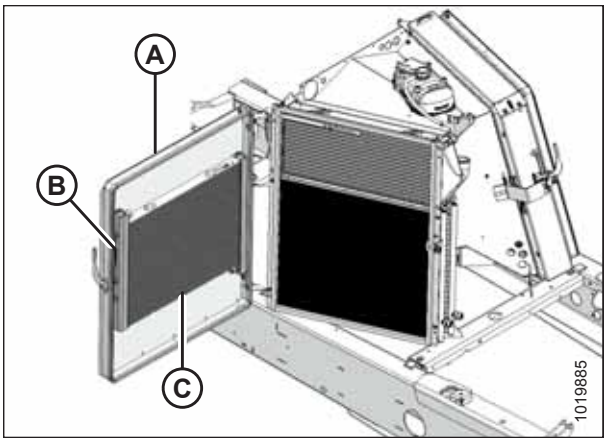

Figure 5.68: Right Side Coolers

5. Secure case drain cooler (A) with bracket (B).
6. Clean debris from case drain cooler (A) and screen (C) with compressed air.

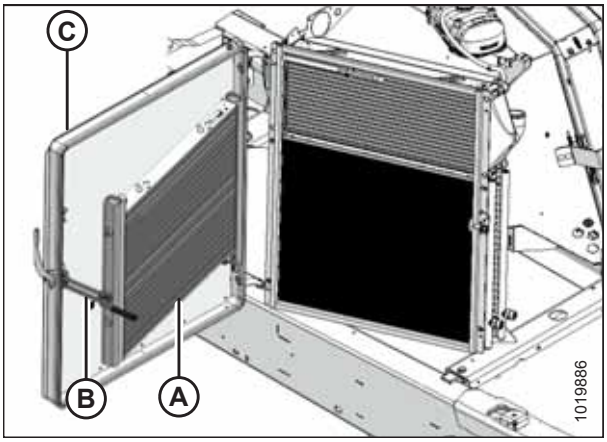

Figure 5.69: Right Side Coolers

7. Close case drain cooler (C) into screen (A) and secure with bracket (B).

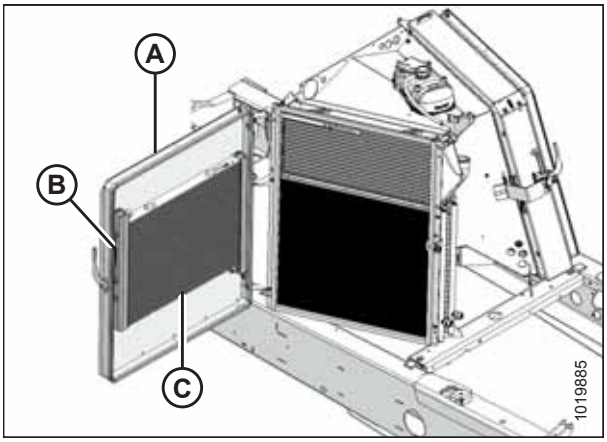

Figure 5.70: Right Side Coolers

8. Close screen/case drain cooler door (B) and secure with latch (A).

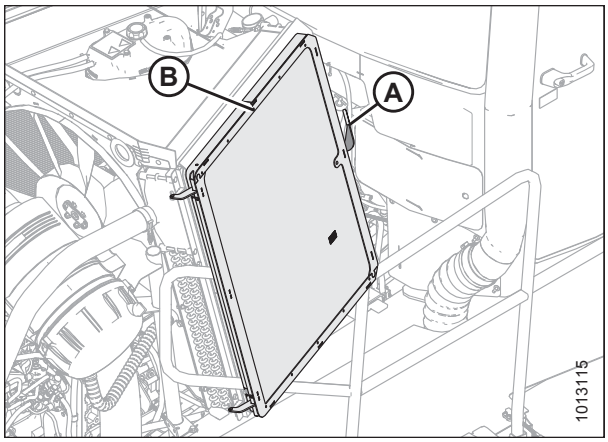

Figure 5.71: Right Cooler Module

5.9 Every 250 Hours or Annually

Complete the following maintenance tasks every 250 hours of operation or annually, whichever occurs first:

- Change engine oil and filter. Refer to *5.9.1 Changing Engine Oil, page 305*.
- Change engine primary air filter. Refer to *5.9.2 Maintaining Engine Air Filters, page 306*.
- Check wheel drive lubricant level. Refer to *5.9.3 Checking Wheel Drive Lubricant Level, page 311*.
- Inspect exhaust system. Refer to *5.9.5 Inspecting Exhaust System, page 312*.
- Change engine gearbox oil. Refer to *5.9.6 Changing Engine Gearbox Lubricant, page 314*.

5.9.1 Changing Engine Oil

Draining Engine Oil

WARNING

To avoid bodily injury or death from unexpected startup of the machine, always stop the engine and remove the key from the ignition before leaving the operator's seat for any reason.

NOTE:

The engine should be warm prior to changing the oil.

1. Stop the engine and remove the key.
2. Place a drain pan with a capacity of about 24 liters (6 US gallons) under the engine oil drain.
3. Remove oil drain plug (A) and allow the oil to completely finish draining.
4. Replace drain plug (A).
5. Check the condition of the used oil. If either of the following is evident, have your Dealer correct the problem before starting the engine:
   - Thin black oil indicates fuel dilution
   - Milky discoloration indicates coolant dilution
6. Dispose of used oil properly.

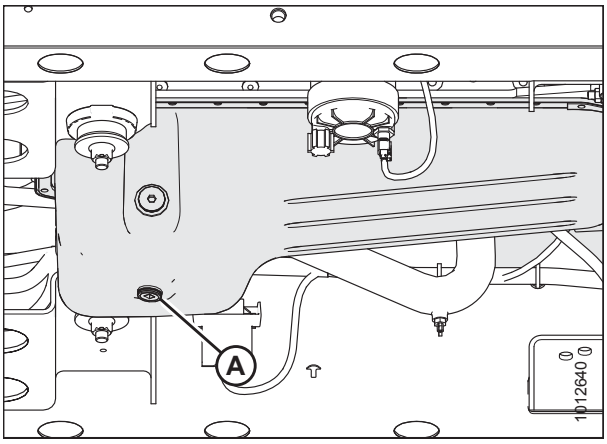

Figure 5.72: Engine Oil Drain Plug

Replacing Engine Oil Filter

NOTE:

Replace oil filter each time engine oil is changed.

1. Open the hood. For instructions, refer to *5.3.1 Opening Hood, page 268*.
2. Place oil pan below filter.

3. Clean around the filter head (A) and remove filter.

   NOTE:

   Check that gasket is removed from filter head.

4. Clean gasket mating surface.
5. Apply a thin film of clean oil to the gasket on the new filter. Refer to *5.1.4 Filter Part Numbers, page 263* for recommended oil filter.
6. Screw the new filter onto the filter mount until the gasket contacts the filter head.
7. Tighten the filter an additional 1/2 to 3/4 turn by hand.

   IMPORTANT:

   Do **NOT** use a filter wrench to install the oil filter. Overtightening can damage the gasket and filter.

8. Properly dispose of used oil filter.

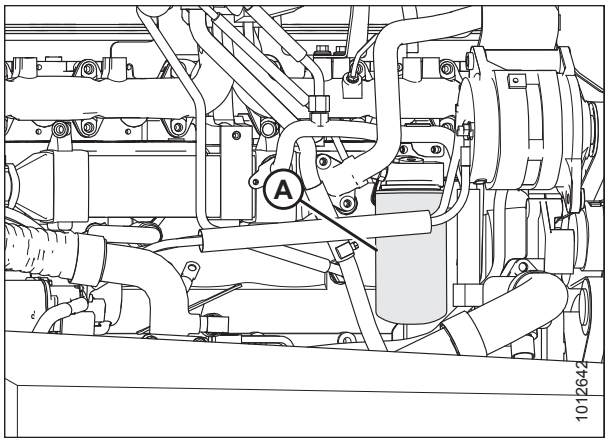

Figure 5.73: Engine Oil Filter

Adding Engine Oil

WARNING

To avoid bodily injury or death from unexpected startup of the machine, always stop the engine and remove the key from the ignition before leaving the operator's seat for any reason.

1. Open the hood. For instructions, refer to *5.3.1 Opening Hood, page 268*.
2. Clean around filler cap (A) and remove by turning it counterclockwise.
3. Carefully pour in 14 liters (14.8 qts. U.S.) of new oil. A funnel is recommended to avoid spillage. Refer to the inside back cover for oil specifications.

CAUTION

Do NOT fill above the HIGH mark.

4. Replace oil filler cap (A) and turn it clockwise until snug.
5. Check the oil level. For instructions, refer to *5.6.1 Checking Engine Oil Level, page 282*.
6. Close the hood. For instructions, refer to *5.3.2 Closing Hood, page 269*.

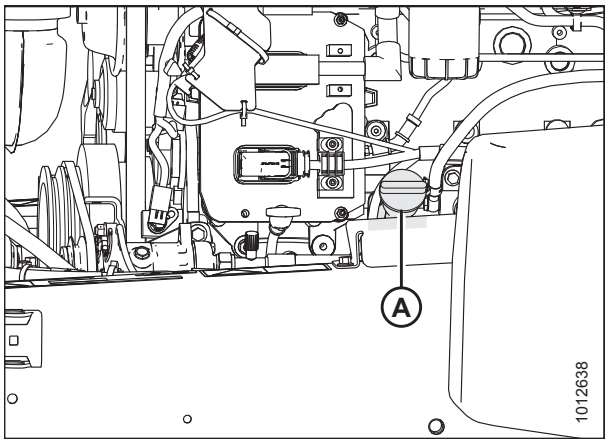

Figure 5.74: Oil Filler Cap

5.9.2 Maintaining Engine Air Filters

Removing Engine Primary Air Filter

1. Stand on right service platform.
2. Open the hood. For instructions, refer to *5.3.1 Opening Hood, page 268*.

3. Slightly lift catch (A) at side of end cap (B). Rotate end cap counterclockwise until it stops.

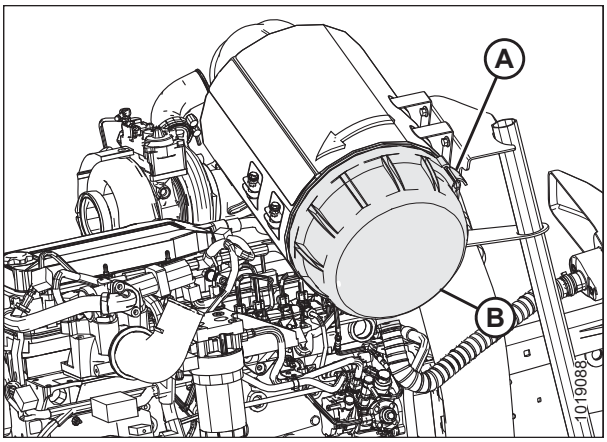

Figure 5.75: Air Filter Housing

4. Make sure arrow (A) lines up with the UNLOCK symbol on end cap.
5. Pull off the end cap.



Figure 5.76: Air Filter

6. Check the aspirator duct opening (A) for obstructions or damage. Clean if necessary.
7. Place cover on platform.

   NOTE:

   Hoses can be left connected to the cover.

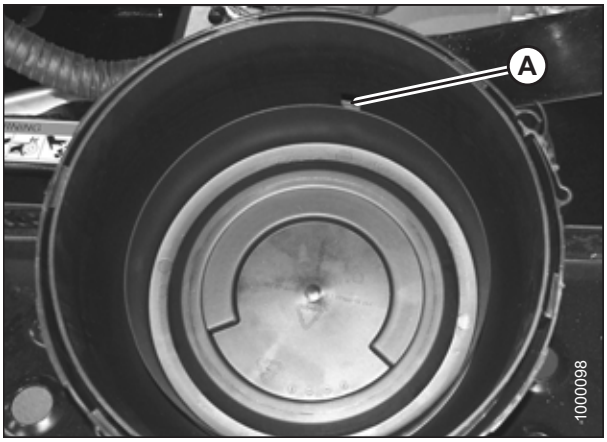

Figure 5.77: Air Filter

8. Pull out the primary filter element (A).

   IMPORTANT:

   Be extremely careful with the dirty element until it is completely out of the housing. Accidentally bumping it while still inside may cause dirt and dust to contaminate the clean side of filter housing.

9. If necessary, also change the secondary filter (B). Refer to *Replacing Secondary Air Filter, page 310*.

   IMPORTANT:

   - Do **NOT** remove the secondary filter unless it needs replacing. It must never be cleaned.
   - Replace secondary filter annually or after every third primary filter change, even if it looks clean.
   - If the secondary filter looks dirty, a further inspection will be required.
   - Examine filter canister for cracks and replace as necessary.
   - Ensure canister retaining latches are secure.

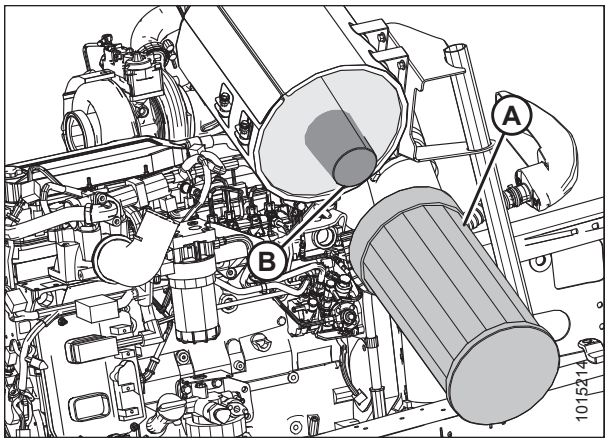

Figure 5.78: Air Filter

IMPORTANT:

Clean the inside of the housing and cover carefully. Dirt left in the air cleaner housing may be harmful to your engine.

- Use a clean, water-dampened cloth to wipe every surface clean.
- Check it visually to make sure it is clean before putting in a new element.
- Always clean the gasket sealing surfaces of the housing. An improper gasket seal is one of the most common causes of engine contamination.
- Make sure that all hardened dirt ridges are completely removed wherever filter gaskets contact the cleaner housing.

Check for uneven dirt patterns on your old element. Your old element is a valuable clue to potential dust leakage or gasket sealing problems.

- A pattern on the element clean side is a sign that the old element was not firmly sealed or that a dust leak exists.
- Make certain the cause of that leak is identified and rectified before replacing the element.
- Recheck to see if the sealing surface in the housing is clean.

Installing Engine Primary Air Filter

NOTE:

For primary air filter replacement part number, refer to *5.1.4 Filter Part Numbers, page 263*.

1. Insert new primary filter (A) into canister and push into place, ensuring that element is firmly seated in canister.

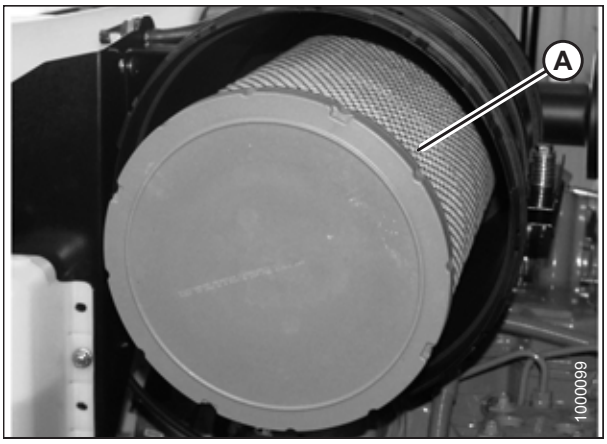

Figure 5.79: Air Filter

2. Align arrow (A) to UNLOCK position on end cap, and push end cap fully onto housing.
3. Rotate end cap clockwise until catch (A) engages housing to prevent end cap from turning.



Figure 5.80: Air Filter

4. Position end cap (B) onto filter housing with aspirator pointing approximately down.
5. Secure end cap onto filter housing by closing latch (A).
6. Close the hood. For instructions, refer to *5.3.2 Closing Hood, page 269*.
7. Close the maintenance platform. For instructions, refer to *5.4.1 Opening Platform, page 270*.

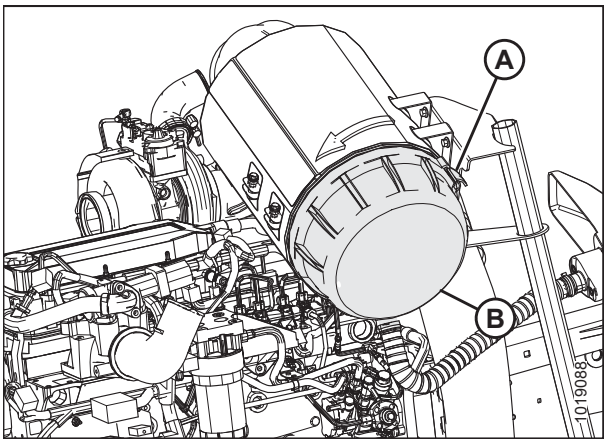

Figure 5.81: Air Filter

Cleaning Primary Air Filter

The engine air cleaner's primary filter should be replaced after three cleanings or at the specified interval. The secondary element should be replaced every third time the primary element is changed. Refer to *5.2 Windrower Break-In Inspections and Maintenance Schedule, page 264* for the required interval.

1. Hold a bright light inside element and check carefully for holes. Vibration would quickly wear a hole in the filter.
2. Check filter gasket for cracks, tears, or other signs of damage.
3. Check element for oil or soot contamination.
4. Check the secondary element for cleanliness. If there is visible dirt on the secondary element, replace both primary and secondary elements. Do **NOT** clean.

   IMPORTANT:

   - The secondary filter element should **NEVER** be cleaned, only replaced.
   - **Air filter element cleaning is NOT recommended due to the possible degradation of the element material.** If cleaning is performed, there are several risks involved and the following steps should be followed. If any of the conditions described in these steps are found, the filter element MUST be replaced.
5. If secondary element passes inspection, use compressed air not exceeding 270 kPa (40 psi) and a dry element cleaner gun to clean the primary element. Hold nozzle next to inner surface only and move up and down on pleats.

   NOTE:

   After three cleanings (or at the specified interval), replace the primary element.
6. Repeat inspection before installing. Refer to *Installing Engine Primary Air Filter, page 309*.

Replacing Secondary Air Filter

IMPORTANT:

- The secondary filter element (A) should never be cleaned, only replaced. Do **NOT** remove the secondary filter element unless it needs replacing.
- Replace secondary element annually or after every third primary filter change, even if it appears clean.
- If replacing secondary element, a further inspection may be necessary.
- Examine filter canister for cracks and replace as necessary.
- Ensure canister retaining latches are secure. Ensure filter sealing surfaces are soft, flexible and sealing, not hard and allowing debris through to secondary filter.

1. Remove the primary filter. For instructions, refer to *Removing Engine Primary Air Filter, page 306*.

   IMPORTANT:

   When replacing secondary filter, reinsert new filter as soon as possible to prevent dirt from entering engine intake.

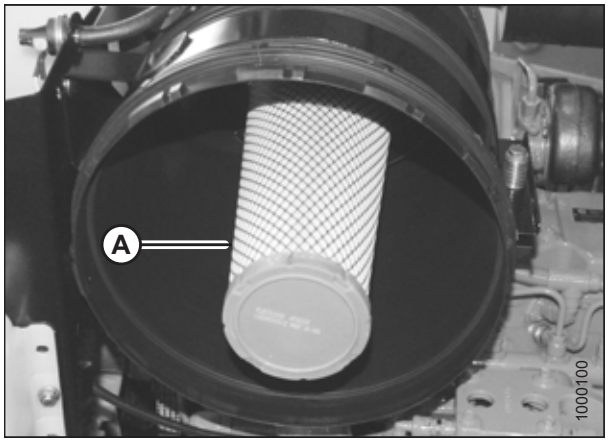

Figure 5.82: Secondary Air Filter

2. Remove the secondary element (A) from canister.

   NOTE:

   If replacing filter, refer to *5.1.4 Filter Part Numbers, page 263*.

3. Insert new secondary filter element (A) into canister, seal first, and push until seal is seated inside canister.

4. Install the primary filter. For instructions, refer to *Installing Engine Primary Air Filter, page 309*.

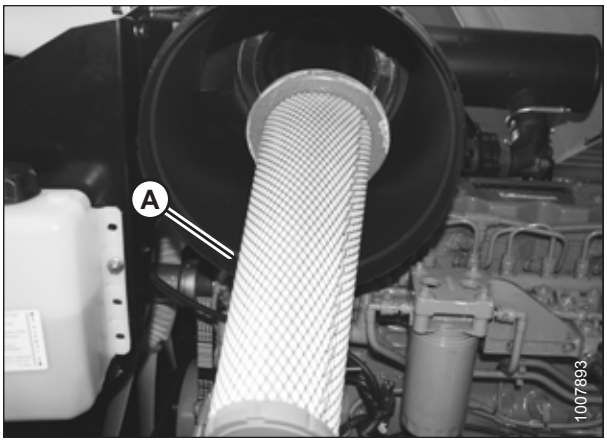

Figure 5.83: Secondary Air Filter

5.9.3 Checking Wheel Drive Lubricant Level

Check the wheel drive lubricant level every 250 hours or annually.

WARNING

To avoid bodily injury or death from unexpected startup of the machine, always stop the engine and remove the key from the ignition before leaving the operator's seat for any reason.

1. Park the windrower on level ground.

2. Position windrower so that plugs (A) and (B) are horizontally aligned with the center (C) of the hub.

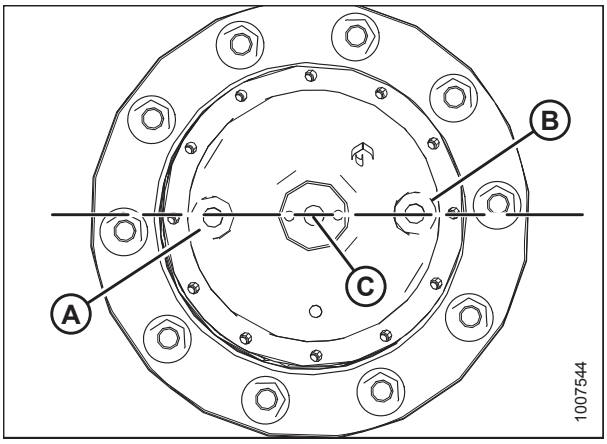

Figure 5.84: Drive Wheel

WARNING

Use caution when removing plug as there may be pressure in the drive.

3. Remove plug (A) or (B). The lubricant should be visible through the port or running out slightly. If lubricant needs to be added, refer to *5.9.4 Adding Wheel Drive Lubricant, page 312*.

   NOTE:

   The type of lubricant used after the first lubricant change is different from the factory supplied lubricant.

4. Reinstall plugs and tighten.

5.9.4 Adding Wheel Drive Lubricant

NOTE:

Do **NOT** mix lubricants of different brands or characteristics.

NOTE:

For lubricant specifications, refer to *5.1.3 Lubricants, Fluids, and System Capacities, page 262*.

WARNING

To avoid bodily injury or death from unexpected startup of the machine, always stop the engine and remove the key from the ignition before leaving the operator's seat for any reason.

1. Rotate the wheel drive so plugs (A) and (B) are horizontally aligned with the center (C) of the hub.
2. Stop the engine and remove the key.
3. Remove either plug (A) or (B).

   NOTE:

   PRIOR TO FIRST CHANGE: Use SAE 85W-140, API service, class GL-5, extreme pressure gear lubricant (non-synthetic).

   NOTE:

   AFTER FIRST CHANGE: Use SAE 75W-140 or 80W-140, API service, class GL-5, fully synthetic transmission lubricant (SAE J2360 preferred).
4. Add lubricant through one of the ports until the lubricant reaches the bottom of the ports and begins to run out.
5. Reinstall and tighten plug (A) or (B).
6. Start up and operate the windrower for a few minutes, then stop and check the oil level. Refer to the inside back cover. If necessary, add more oil.

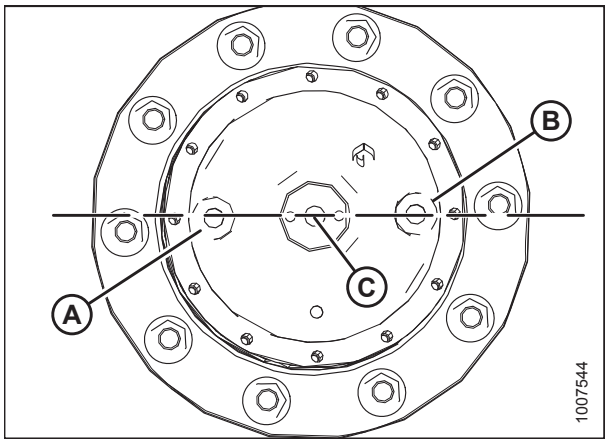

Figure 5.85: Drive Wheel

5.9.5 Inspecting Exhaust System

The system consists of two main canisters for exhaust treatment. Between the two exhaust canisters is a tube with a dosing module (DM) for diesel exhaust fluid (DEF).

CAUTION

Engine exhaust stack may be hot. To avoid burns, do NOT touch exhaust canister when engine is running. Allow sufficient cooling time after shut-down.

The exhaust system requires no regular maintenance, but it should be inspected periodically as follows:

1. Open the hood. For instructions, refer to *5.3.1 Opening Hood, page 268*.

   IMPORTANT:

   Ensure the exhaust system is secure to eliminate vibration.

2. Check the following:

   a. Exhaust canisters (A) and bellow tube (B) for dents, cracks, and wear

   b. Straps (C) for tightness

   c. U-bolt (D) and band clamps (E) for breakage, cracks, and rust

   IMPORTANT:

   Damaged exhaust piping, clamps or components can lead to exhaust leaks and engine derate.

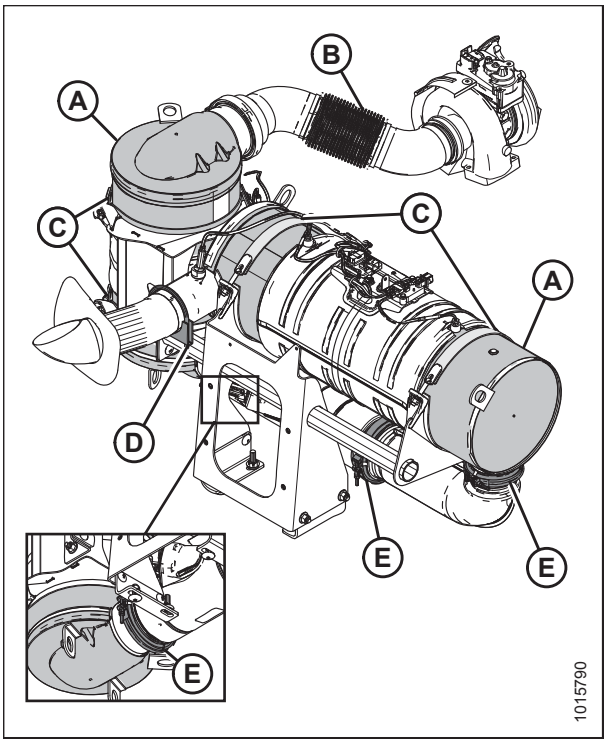

Figure 5.86: Exhaust System

3. Check the three band clamps (A) securing the tubes in between the two exhaust canisters.

   IMPORTANT:

   Do **NOT** change exhaust canister type, piping sizes, or exhaust configuration. See your Dealer for proper replacement parts.

4. Inspect the area around clamps (A) for breakage, cracks, and rust-through.

   IMPORTANT:

   If exhaust is leaking, tighten clamps to 12–15 Nm (9–11 lbf·ft). If leaking at band connection, replace seals. Contact your Dealer if exhaust leak persists.

5. Check tubing for dents or crushed areas.

   IMPORTANT:

   Dents or crushed portions of any tubing create exhaust flow restriction and increase back pressure significantly. Even relatively small dents will cause decreased fuel economy and increased turbo wear. If dents are relatively large, increased bearing and cylinder wear will occur due to increased exhaust temperature.

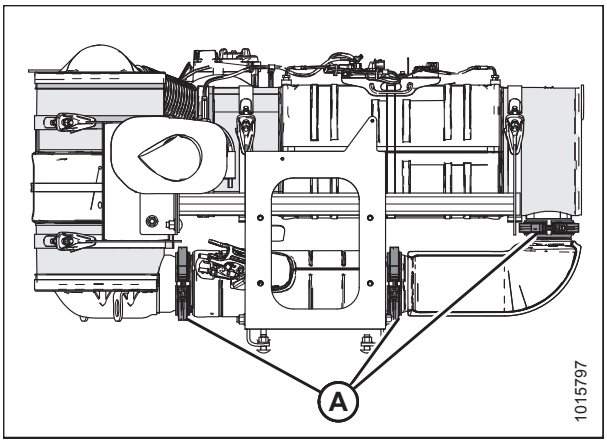

Figure 5.87: Exhaust Canister

5.9.6 Changing Engine Gearbox Lubricant

Change engine gearbox lubricant after the first 50 hours, and then at 250 hours as follows:

WARNING

To avoid bodily injury or death from unexpected startup of the machine, always stop the engine and remove the key from the ignition before leaving the operator's seat for any reason.

CAUTION

Park on a flat, level surface with the header on the ground, the ground speed lever in PARK position, and the steering wheel in locked position (centered). Wait for the HPT to beep and display a red P symbol to confirm the park brakes have engaged.

NOTE:

It is best to change lubricant in the morning before it warms up. If the engine is hot, wait 10 minutes before checking the lubricant level to allow the lubricant to cool and settle in the sump.

1. Park windrower on a level surface.
2. Stop the engine and remove the key.
3. Place a 4 liter (1 US gallon) drain pan under the gearbox.
4. Remove drain plug (A) and allow lubricant to completely finish draining.
5. Inspect the drain plug. Small metal shavings are normal. If there are any larger metal pieces, an inspection of the gearbox will be required.
6. Install drain plug (A).

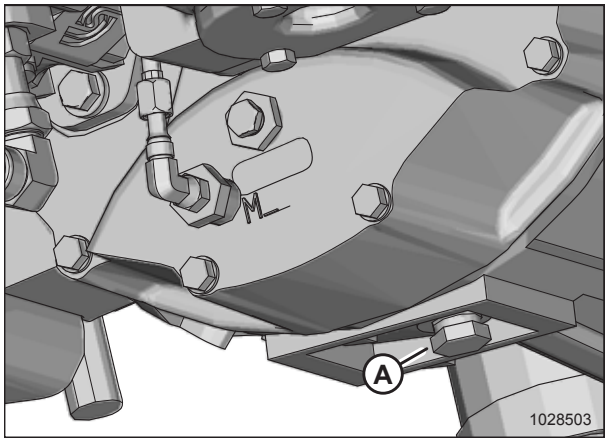

Figure 5.88: Engine Gearbox

7. Remove dipstick (A) and breather (B).

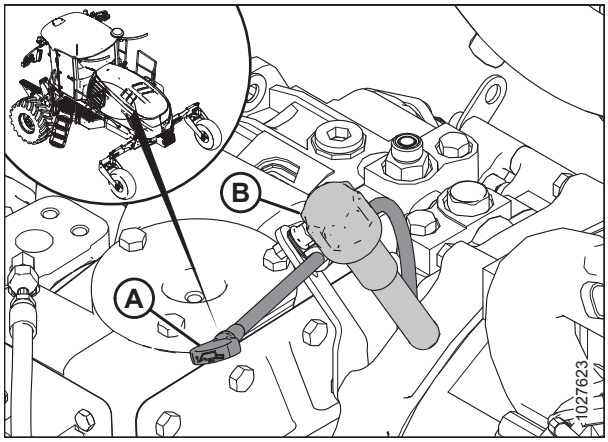

Figure 5.89: Gearbox Dipstick and Breather

8. Add lubricant until the oil level is between the ADD (A) and FULL (B) marks on the dipstick. For lubricant specifications, refer to the inside back cover.
9. Reinstall dipstick and breather.
10. Operate the engine at low idle and check for leaks at the check plug and drain plug.

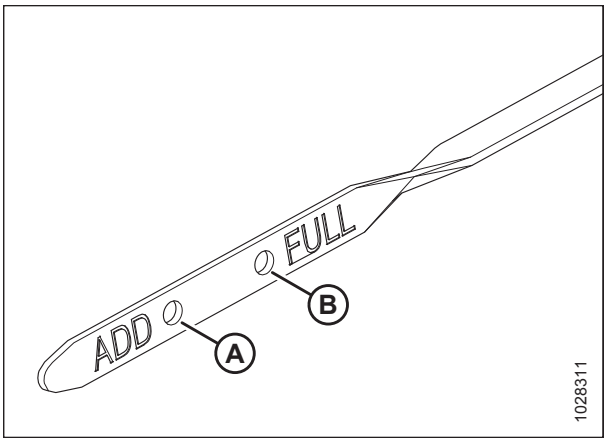

Figure 5.90: Bottom End of Dipstick

5.10 Every 500 Hours or Annually

Complete the following maintenance tasks every 500 hours of operation or annually, whichever occurs first.

- Change primary and secondary fuel filters. Refer to *5.10.1 Maintaining Fuel Filters, page 316*.
- Check safety systems. Refer to *5.10.2 Safety Systems, page 319*.

5.10.1 Maintaining Fuel Filters

The windrower's fuel system is equipped with primary (A) and secondary (B) screw-on cartridge type filters. The primary filter (A) is equipped with a separator that separates sediment and water from the fuel.

NOTE:

Bottom part of image was made transparent to show the primary filter (A).

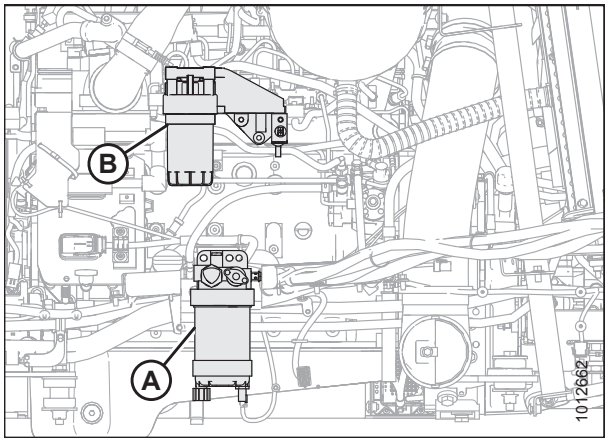

Figure 5.91: Fuel System

Removing Primary Fuel Filter

WARNING

To avoid bodily injury or death from unexpected startup of the machine, always stop the engine and remove the key from the ignition before leaving the operator's seat for any reason.

1. Stop the engine and remove the key.
2. Open the hood. For instructions, refer to *5.3.1 Opening Hood, page 268*.
3. Locate the primary fuel filter (A) on the right cab-forward side of the windrower.

   NOTE:

   Bottom part of the image made transparent to show location of the primary filter.
4. Clean around the primary filter (A) head.
5. Disconnect the water in fuel (WIF) sensor (B) from bottom of filter.
6. Turn drain valve (C) by hand counterclockwise until draining occurs, and drain filter into a container.
7. Remove filter (A) with a filter wrench.
8. Clean gasket mating surface.

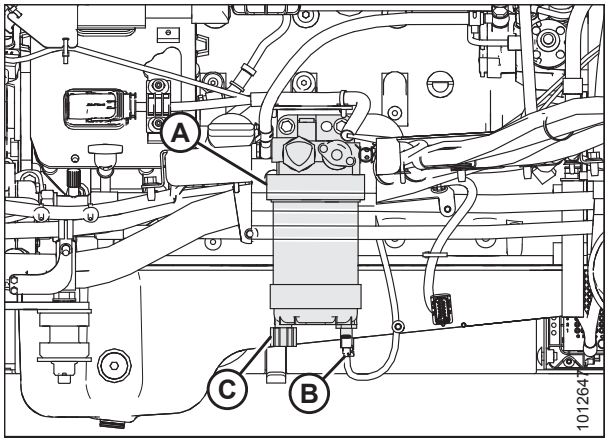

Figure 5.92: Fuel System

Installing Primary Fuel Filter

IMPORTANT:

Do **NOT** prefill filter with fuel. Prefilling can contaminate the fuel system.

NOTE:

If replacing filter, refer to *5.1.4 Filter Part Numbers, page 263*.

1. Apply some diesel fuel to the filter gasket, and screw the new filter (A) onto the filter mount until the gasket contacts the filter head.
2. Reconnect water in fuel (WIF) sensor (B).
3. Tighten the filter an additional 1/2 to 3/4 turn by hand.

   IMPORTANT:

   Do **NOT** use a filter wrench to install the filter. Overtightening can damage the gasket and filter.

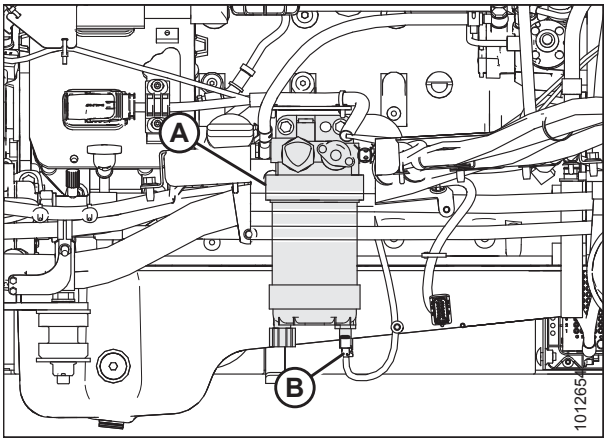

Figure 5.93: Fuel System

Removing Secondary Fuel Filter

WARNING

To avoid bodily injury or death from unexpected startup of the machine, always stop the engine and remove the key from the ignition before leaving the operator's seat for any reason.

1. Stop the engine and remove the key.
2. Open the hood. For instructions, refer to *5.3.1 Opening Hood, page 268*.
3. Clean around the secondary filter head (A).
4. Place a container under the filter to catch spilled fluid.
5. Remove filter (B) with a filter wrench.
6. Clean gasket mating surface.

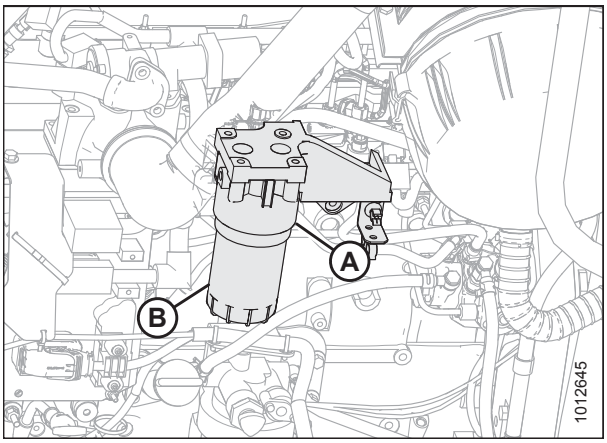

Figure 5.94: Fuel System

Installing Secondary Fuel Filter

IMPORTANT:

Do **NOT** prefill filter with fuel. Prefilling can contaminate the fuel system.

NOTE:

If replacing filter, refer to *5.1.4 Filter Part Numbers, page 263*.

1. Screw the new secondary filter (A) onto the filter mount until the gasket contacts the filter head.
2. Tighten the filter an additional 1/2 to 3/4 turn by hand.

   IMPORTANT:

   Do **NOT** use a filter wrench to install the filter. Overtightening can damage the gasket and filter.
3. Prime the fuel system, refer to *Priming Fuel System, page 318*.

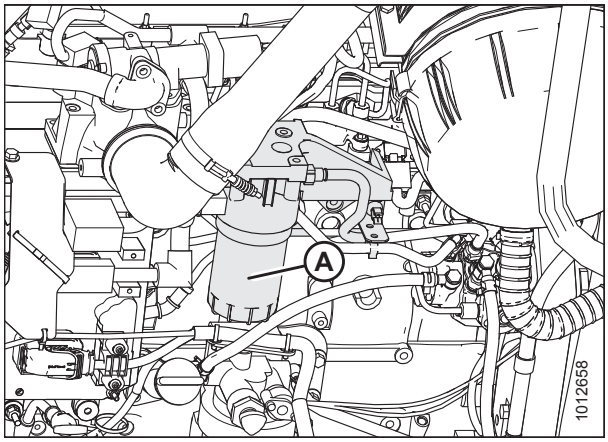

Figure 5.95: Fuel System

Priming Fuel System

Controlled venting of air is provided at the injection pump through the fuel drain manifold. Small amounts of air introduced by changing filters or injection pump supply line will be vented automatically if the fuel filters are changed in accordance with instructions.

IMPORTANT:

Do **NOT** bleed the fuel system. Manual priming will be required if:

- Fuel filter is replaced
- Injection pump is replaced
- High-pressure fuel lines are replaced
- Engine is run until fuel tank is empty

WARNING

To avoid bodily injury or death from unexpected startup of the machine, always stop the engine and remove the key from the ignition before leaving the operator's seat for any reason.

WARNING

The fuel pump high-pressure fuel lines and fuel rail contain extremely high-pressure fuel. Never loosen any fittings. Personal injury and property damage can result.

1. Stop the engine and remove the key.
2. Open the hood. For instructions, refer to *5.3.1 Opening Hood, page 268*.

3. Locate the primary fuel filter assembly (A).
4. Turn the priming knob (B) counterclockwise to unlock the plunger on the primary filter head.
5. Pump until hand pump becomes firm.
6. Push the plunger in and lock it by turning knob (B) clockwise until snug.
7. Try starting engine. If engine does **NOT** start, or starts then shuts down, repeat priming procedure.
8. Close the hood. For instructions, refer to *5.3.2 Closing Hood, page 269*.

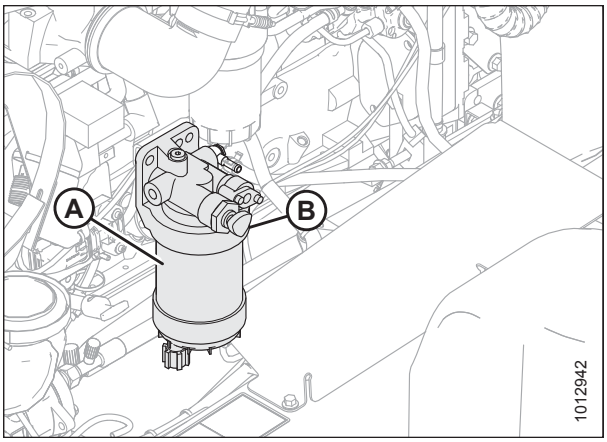

Figure 5.96: Primary Fuel Filter

5.10.2 Safety Systems

Checking Operator Presence System

The operator presence system is designed to function as described in *3.2 Operator Presence System, page 41*.

Perform the following checks on the Operator Presence System every year or every 500 hours—whichever occurs first.

Checking the Operator Presence System switch status on the Harvest Performance Tracker (HPT) display:

1. Turn the key in the windrower ignition to the ON position.
2. Access the windrower menus by pressing soft key 5 (A).
3. Access the diagnostic menu by pressing soft key 4 (B).
4. Access the Input/Output list by pressing soft key 3 (C).

   NOTE:

   The screen will display two options: ABNORMAL STATUS and SYSTEM.
5. Scroll to SYSTEM and press scroll knob to select.



Figure 5.97: HPT Soft Keys

6. Scroll to INTERLOCK-NEUTRAL (A) in the Input/Output List and press scroll knob to select.

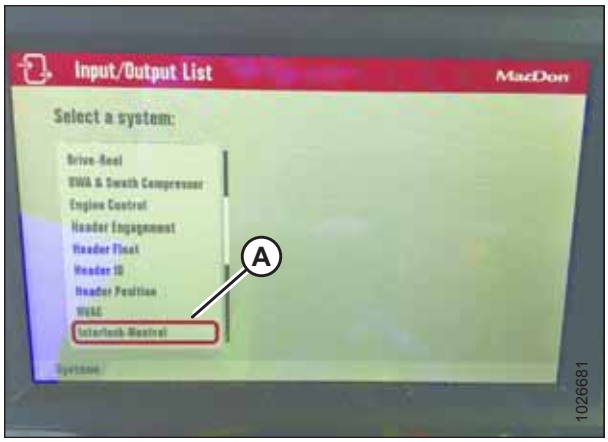

Figure 5.98: Input/Output List

7. Scroll to OPERATOR PRESENT (A) and check the following conditions:
   - The status must be ON when the Operator is sitting on the seat.
   - The status must be OFF when the Operator is not sitting on the seat.

   NOTE:

   If the two conditions listed above are **NOT** true, the Operator Presence System requires adjustment. See your MacDon Dealer.

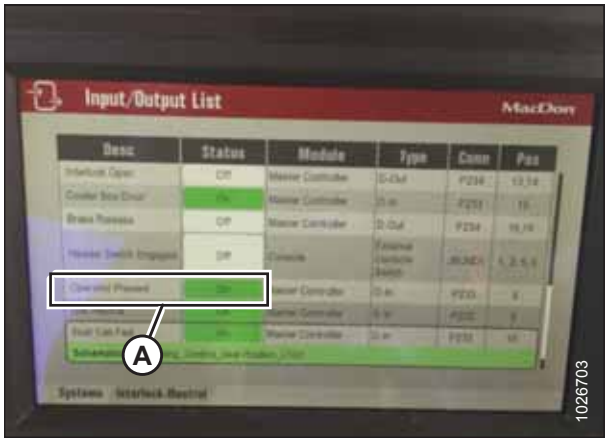

Figure 5.99: Operator Present Status (Set to ON)

Perform the following checks on the Operator Presence System every 5 years.

Checking the Operator Presence System and engine lock-out systems:

CAUTION

Park on a flat, level surface with the ground speed lever in PARK position and the steering wheel in locked position (centered). Wait for the HPT to beep and display a red P symbol to confirm the park brakes have engaged.

CAUTION

Check to be sure all bystanders have cleared the area.

1. With the windrower engine running, place the ground speed lever (GSL) in PARK and center the steering wheel until it locks.
2. With everyone clear of the machine, engage the HEADER ENGAGE switch:
   a. After header drives are running, stand up out of the seat. In approximately 5 seconds, the header should shut off.
   b. If **NOT**, the Operator Presence System requires adjustment. See your MacDon Dealer.

   NOTE:

   To restart the header, move the HEADER ENGAGE switch to OFF position and then back to the ON position.
3. With the windrower moving at less than 8 km/h (5 mph):

a. Stand up out of the seat.

b. The Harvest Performance Tracker (HPT) display will flash NO OPERATOR DETECTED, ENGINE SHUT DOWN IN 5…4…3…2…1…accompanied by a steady tone. At 0, the engine shuts down.

c. If the engine does **NOT** shut down, the Operator Presence System requires adjustment. See your MacDon Dealer.

4. With the windrower moving at more than 8 km/h (5 mph):

a. Stand up out of the seat.

b. After a 2 second delay, the HPT will display NO OPERATOR DETECTED along with a tone.

c. If **NOT**, the Operator Presence System requires adjustment. See your MacDon Dealer.

Checking Engine Interlock

Perform the following checks on the engine lock-out system every year or every 500 hours—whichever occurs first.

CAUTION

Check to be sure all bystanders have cleared the area.

1. With the engine shut down and the HEADER ENGAGE switch (A) engaged, try to start the engine. If the engine turns over, the system requires adjustment. See your MacDon Dealer.
2. With the engine shut down, the steering wheel **NOT** centered, and the ground speed lever (GSL) (B) in NEUTRAL (but **NOT** in PARK), try to start the engine. The Harvest Performance Tracker (HPT) will flash NOT IN NEUTRAL and CENTER STEERING WHEEL, accompanied by a short beep with each flash and the engine should **NOT** turn over. If the engine turns over, the system requires adjustment. See your MacDon Dealer.

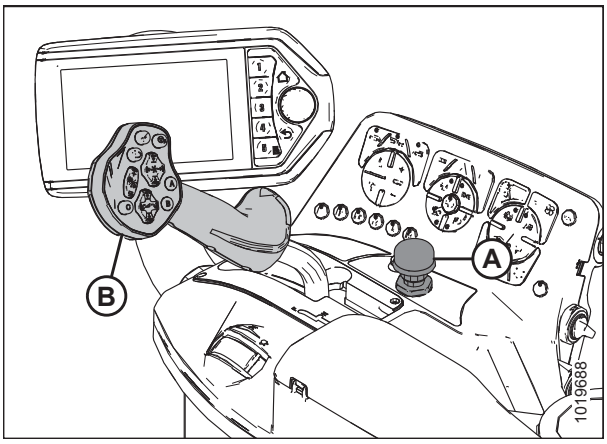

Figure 5.100: Console

A properly functioning system should operate as follows. If not, see your MacDon Dealer.

- The starter should engage **ONLY** when the GSL is in PARK, the steering wheel is locked in the CENTER position, and the HEADER ENGAGE switch is in the OFF position.
- Under the above conditions, the brake should engage and the machine should **NOT** move after engine start-up.
- The steering wheel should **NOT** lock with the engine running and the GSL out of PARK.
- When the GSL is pulled straight out of PARK (**NOT** in forward or in reverse), the machine should **NOT** move with the engine running and with the steering wheel still centered.

5.11 Every 1000 Hours

Complete the following maintenance tasks every 1000 hours of operation.

- Change fuel tank vent filter. Refer to *5.11.1 Removing and Installing the Fuel Tank Vent Filter, page 322*.
- Clean DEF supply module filter. Refer to *5.11.2 DEF Supply Module Filter, page 323*.
- Change wheel drive lubricant. Refer to *5.5.7 Changing Wheel Drive Lubricant, page 277*.

5.11.1 Removing and Installing the Fuel Tank Vent Filter

The fuel tank is vented by a hose and filter in the platform rail. Change the filter every 1000 hours or annually, whichever occurs first.

Change the filter as follows:

WARNING

To avoid bodily injury or death from unexpected startup of the machine, always stop the engine and remove the key from the ignition before leaving the operator's seat for any reason.

WARNING

To avoid personal injury or death from explosion or fire, do NOT smoke or allow flame or sparks near windrower when servicing.

1. Stop the engine and remove the key.
2. Remove two bolts (A) and plate (B) on the right service platform.

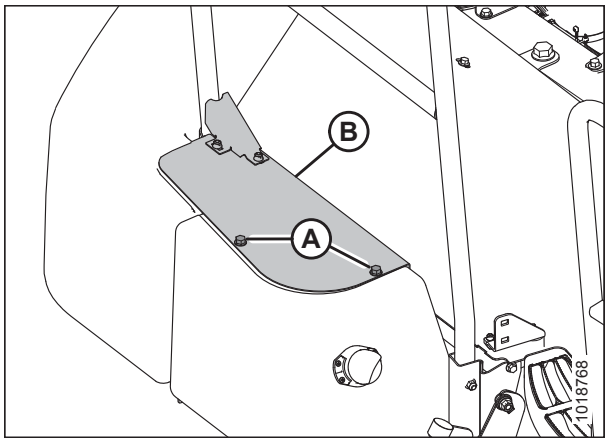

Figure 5.101: Right Service Platform

3. Release hose tension clamps (A) and slide away from filter (B).
4. Pull hoses off filter (B) and remove filter.

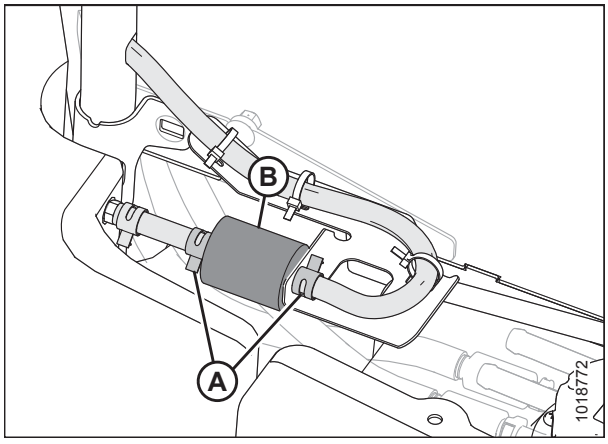

Figure 5.102: Fuel Tank Vent and Filter

5. Position new filter (A) and attach to fuel tank hose (B). The IN marking on the filter should face away from the fuel tank hose.

   NOTE:

   If filter has an arrow instead of an IN marking, arrow should point toward the fuel tank hose.

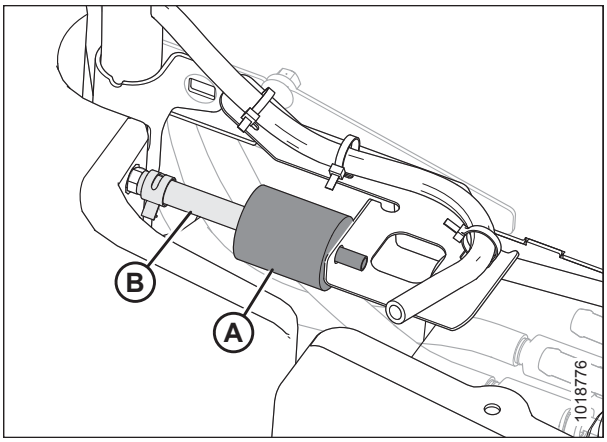

Figure 5.103: Fuel Tank Vent and Filter

6. Attach fuel vent hose (A) to filter (B) and secure both hoses with tension clamps (C).
7. Close hood. For instructions, refer to *5.3.2 Closing Hood, page 269*.

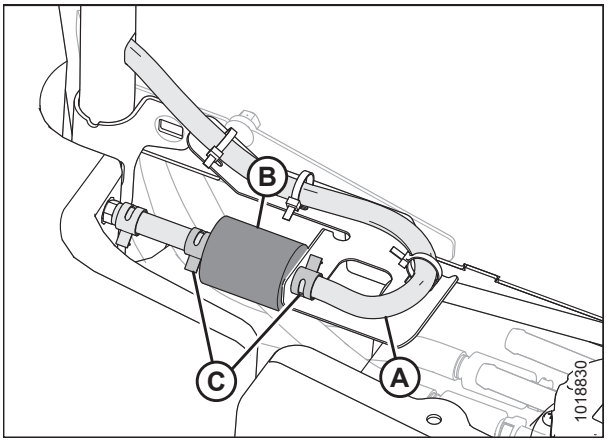

Figure 5.104: Fuel Tank Vent and Filter

5.11.2 DEF Supply Module Filter

The supply module filter is designed to prevent debris that may be suspended in the diesel exhaust fluid (DEF) from entering the system. Permanent damage to—and premature failure of—the DEF supply module can result from fluid debris.

Checking the DEF Supply Module Filter

1. Locate the aftertreatment diesel exhaust fluid (DEF) supply module (A) on the inside of the right platform by the engine oil dipstick.

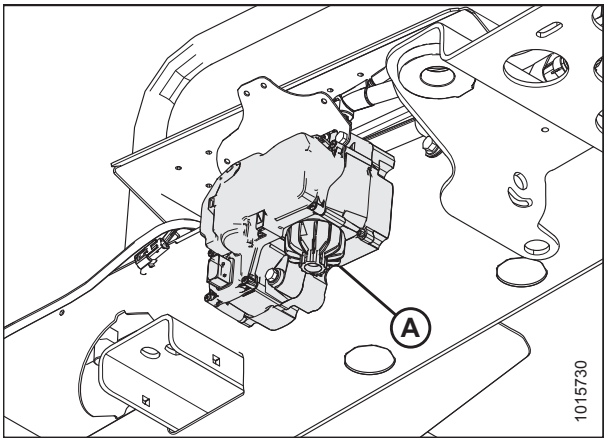

Figure 5.105: DEF Supply Module

2. Inspect the area around the seal and vent of the aftertreatment DEF supply module filter cap (A) for signs of leakage.
3. DEF fluid leaves a white deposit when dry. If there is evidence of leaking, remove the supply module filter, clean and inspect before replacing. For instructions, refer to *Cleaning and Inspecting the Supply Module Filter, page 325*.

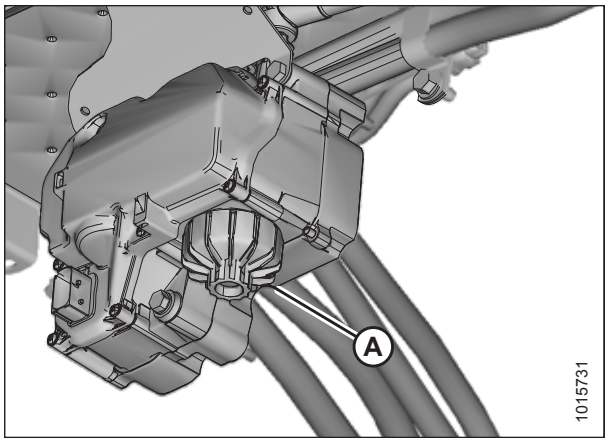

Figure 5.106: DEF Supply Module Filter Cap

Removing the Supply Module Filter

WARNING

Batteries can emit explosive gases. To reduce the possibility of personal injury, always ventilate the compartment before servicing the batteries. To reduce the possibility of arcing, remove the negative (-) battery cable first and attach the negative (-) battery cable last.

WARNING

Diesel Exhaust Fluid (DEF) contains urea. Do NOT get the substance in your eyes. In case of contact, immediately flush eyes with water for a minimum of 15 minutes. Do NOT swallow. In the event the DEF is ingested, contact doctor immediately.

WARNING

The DEF line connecting the aftertreatment DEF dosing unit to the aftertreatment DEF dosing valve is under low pressure and should NOT be disconnected while the engine is running or before the system has completed the purge process after engine shutdown. Disconnecting the DEF line while under low pressure could cause DEF to spray.

WARNING

Wear appropriate eye and face protection when using compressed air. Flying debris and dirt can cause personal injury.

DANGER

To avoid bodily injury or death from unexpected startup of the machine, always stop the engine and remove the key from the ignition before leaving the operator's seat for any reason.

IMPORTANT:

Any spilled DEF must be contained and absorbed by non-combustible absorbent material like sand, and then shoveled to a suitable container for disposal. DEF is corrosive. If spilled on tank or any surface of the vehicle, rinse thoroughly with water.

IMPORTANT:

Do **NOT** disconnect the windrower batteries until the DEF dosing system has completed the purge cycle. Before beginning to remove and/or disconnect any components, wait at least 5 minutes after the key switch is turned OFF for the aftertreatment DEF dosing system to purge the DEF from the system. The purge cycle is an automatic process and does not require intervention to occur. The aftertreatment DEF supply module will create an audible pumping noise during the purging process.

NOTE:

DO **NOT** power wash or steam clean the filter. Use compressed air to remove any loose debris.

1. Stop the engine and remove the key. Wait 3 minutes for DEF system to complete purge cycle.
2. Place a catch basin under DEF filter cap to collect the remaining DEF in the filter housing.
3. Unscrew the filter cap (A).
4. Remove the aftertreatment DEF filter equalizing element (B).
5. Remove the old aftertreatment DEF supply module filter element (D).

   NOTE:

   A disposable service tool (C) is included with the filter to aid in filter removal. Use the appropriate end of the tool to remove filter. When inserting the tool, a click sound can be heard which indicates proper engagement with the filter.
6. Discard and replace the filter and equalizing element if removed from the aftertreatment supply module.

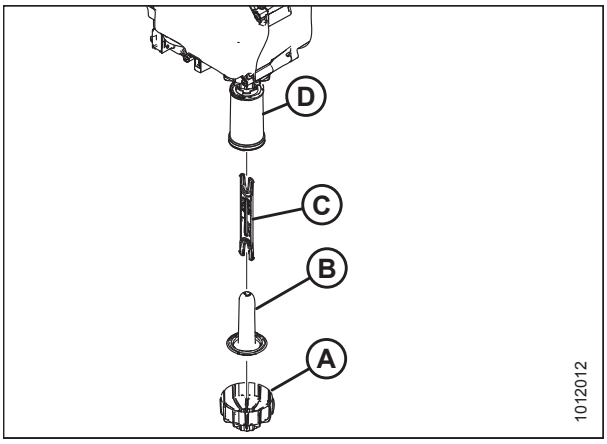

Figure 5.107: DEF Supply Module Filter

Cleaning and Inspecting the Supply Module Filter

NOTE:

If there is the possibility that contaminated diesel exhaust fluid (DEF) has gone through the DEF supply system, check the DEF filter prior to discarding the filter.

1. Check the diesel exhaust filter for evidence of contaminated DEF. Use visual and aroma characteristics of the filter to determine if contaminated fluid has passed through the dosing system.
2. Inspect the diesel exhaust filter for debris.
3. Discard the filter element and the equalizing element.
4. Inspect the aftertreatment DEF supply module filter cap for cracks or holes.
5. Check the condition of the threads on the aftertreatment DEF supply module cap.
6. If threads are damaged, replace the aftertreatment DEF supply module cap.
7. If cap threads are damaged, inspect the aftertreatment DEF supply module threads.
8. If threads of aftertreatment DEF supply module are damaged, replace the entire aftertreatment DEF supply module.
9. Clean the aftertreatment DEF supply module cap and threads on the supply module with warm water and clean cloth.

Installing the Supply Module Filter

1. Slide the DEF filter equalizing element (A) into the DEF filter cartridge (B).
2. Insert the assembly into the aftertreatment DEF supply module (C).
3. Install cap (D) and torque to 20 Nm (15 lbf·ft).

   NOTE:

   The aftertreatment DEF dosing system will not prime until the correct selective catalytic reduction catalyst (SCR) temperatures are reached. To verify that there are no DEF leaks, test drive the windrower for a minimum of 15 minutes to get the SCR system up to temperature.
4. Operate the engine and check for leaks.

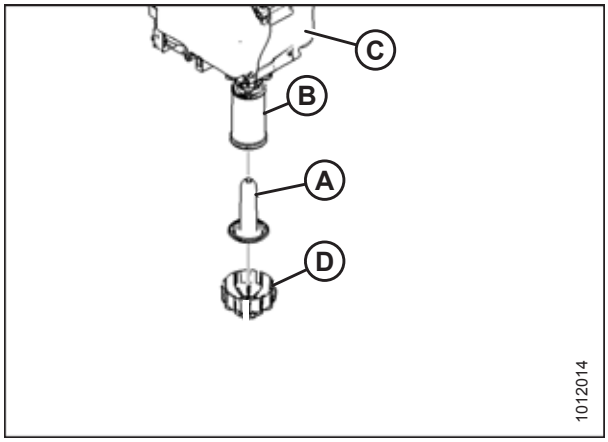

Figure 5.108: DEF Supply Module Filter

5.12 Every 2000 Hours

Complete the following maintenance tasks every 2000 hours of operation.

- Change engine coolant. Refer to *5.12.1 Changing Engine Coolant, page 327*.
- Change hydraulic oil. Refer to *5.12.2 Draining Hydraulic Oil, page 329*
- Change DEF tank vent hose filter. Refer to *5.12.4 Replacing the Diesel Exhaust Fluid Vent Hose Filter, page 332*.
- General engine inspection. Refer to *5.12.5 General Engine Inspection, page 332*.

5.12.1 Changing Engine Coolant

Change the engine coolant after every 2000 hours of operation or two years, whichever occurs first.

Draining Coolant

WARNING

To avoid bodily injury or death from unexpected startup of the machine, always stop the engine and remove the key from the ignition before leaving the operator's seat for any reason.

CAUTION

To avoid personal injury from hot coolant, do NOT turn pressurized coolant tank cap until engine cools.

1. Stop the engine and remove the key. Let the engine cool.
2. Open the hood. For instructions, refer to *5.3.1 Opening Hood, page 268*.
3. Turn the pressurized coolant tank cap (A) to the first notch to relieve pressure before removing cap completely.
4. Remove the pressurized coolant tank cap.

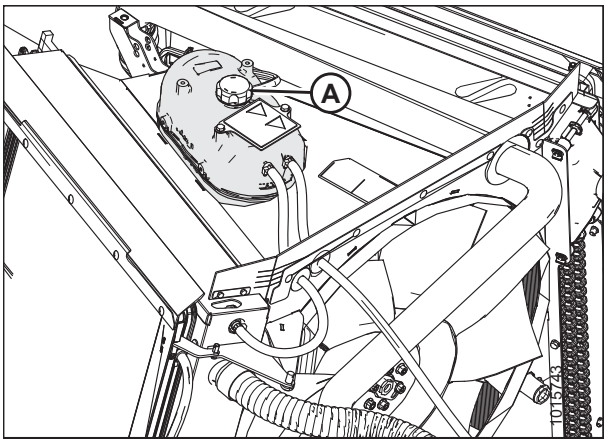

Figure 5.109: Coolant Recovery Tank

5. Locate the radiator drain valve (B) on the radiator inlet tube (A). It is located inside the frame beside the engine.
6. Place a drain pan (about 30 liters [8 US gallons]) under the drain valve, and then open the radiator drain valve (B).
7. When the system has been completely drained, close the radiator drain valve (B).
8. Fill system with clean water through the pressurized coolant tank. Replace the pressurized coolant tank cap.
9. Start engine and press the red area on the console TEMPERATURE CONTROL until maximum heating is reached. Run the engine until normal operating temperature (green range on display) is reached.

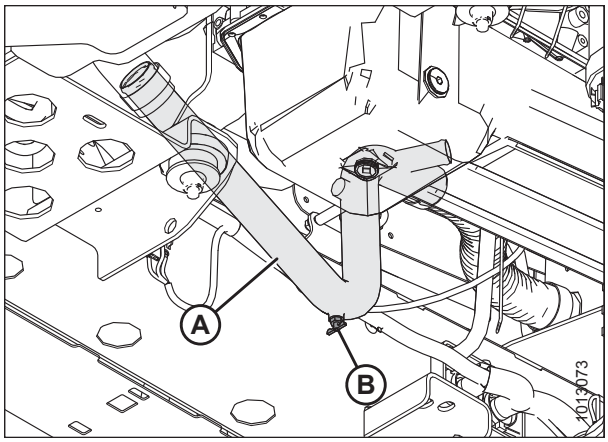

Figure 5.110: Radiator Drain Valve

10. Stop the engine. Drain water out before rust or sediment settles. Repeat Steps *3, page 327* to *7, page 328* to drain water.
11. Close drain valves. Fill the system with a solution of clean water and a heavy duty radiator cleaner. Follow instructions provided with the cleaner.
12. After using the cleaner solution, flush system with clean water again. Inspect radiator, hoses, and fittings for leaks.
13. Close drain valves and fill system. Refer to *Adding Coolant, page 328*.
14. Close the hood. For instructions, refer to *5.3.2 Closing Hood, page 269*.

Adding Coolant

Check the coolant level in the pressurized coolant tank daily, the tank should be at least one-half full. If less, add coolant.

CAUTION

To avoid personal injury from hot coolant, do NOT turn pressurized coolant tank cap until engine cools.

1. Open the hood. For instructions, refer to *5.3.1 Opening Hood, page 268*.
2. Remove the pressurized cap (A) from coolant recovery tank.

   NOTE:

   For coolant specifications, refer to the inside back cover.
3. Add coolant at a rate not exceeding 11 L/min (3 gpm) until the recovery tank is one half full.

   NOTE:

   When adding coolant, use the MAX COLD line (B) on the side of tank that faces cab for an accurate measurement.

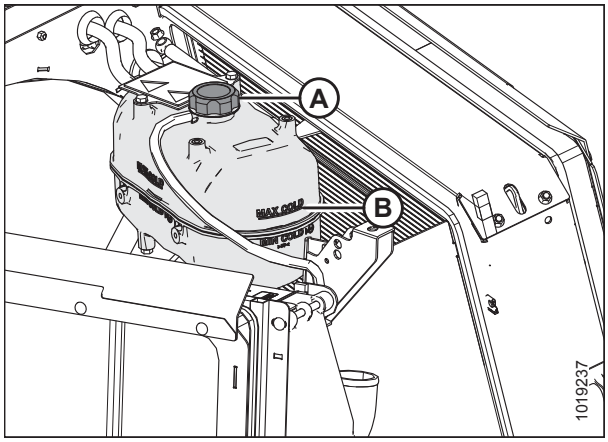

Figure 5.111: Coolant Recovery Tank

CAUTION

Before starting the machine, check to be sure all bystanders have cleared the area.

4. With the pressurized cap off, start the engine and run at high idle for approximately 20 minutes or until the engine temperature reaches 85°C (185°F).
5. Add coolant until the recovery tank is one-half full. Check the coolant level again. Refer to *5.6.5 Checking Engine Coolant Level, page 288*.
6. Replace the pressurized cap (A).
7. Close the hood. For instructions, refer to *5.3.2 Closing Hood, page 269*.

5.12.2 Draining Hydraulic Oil

Hydraulic oil should be changed every 2000 hours of operation or 3 years, whichever comes first.

DANGER

To avoid bodily injury or death from unexpected startup of the machine, always stop the engine and remove the key from the ignition before leaving the operator's seat for any reason.

CAUTION

If machine is running, oil may be hot. Burns can result from contact with hot oil. This procedure can be performed when the oil is cold, but first run the machine to stir the oil up before draining.

1. Park windrower on level ground and lower header and reel so that lift cylinders are fully retracted.
2. Stop the engine and remove the key.
3. Open the hood. For instructions, refer to *5.3.1 Opening Hood, page 268*.
4. Place a container (at least 65 liters [17 US gallons] capacity) under drain at the bottom of the hydraulic reservoir to collect the oil.
5. On the hydraulic oil tank, turn plug handle (A) counterclockwise until loose, and then remove plug (this will allow air to enter tank).

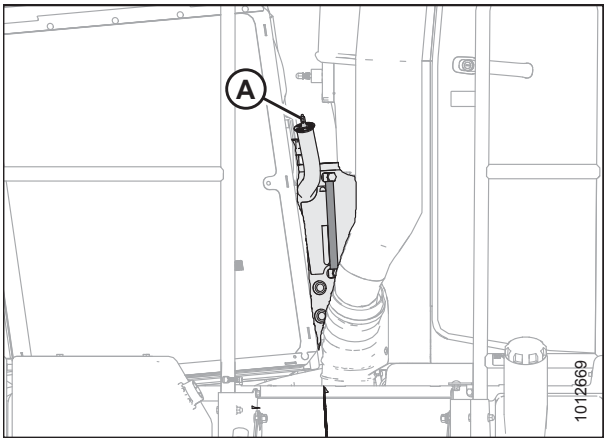

Figure 5.112: Reservoir Plug

6. From beneath the windrower, locate hose (A) that connects to the inlet manifold (B).
7. Remove hose (A) from the elbow fitting and allow hose to drain into a clean container.
8. Once the tank is empty, reattach hose to elbow.

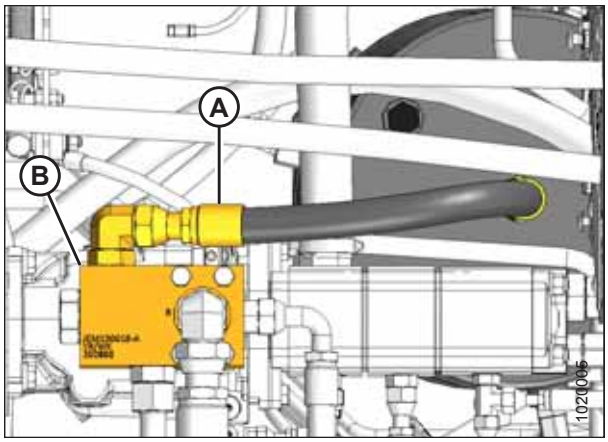

Figure 5.113: Inlet Manifold

9. Locate and remove the magnetic drain plug (A) that is underneath the hydraulic oil tank.

   NOTE:

   Pull the traction drive hoses out of the way to allow oil to drop straight down into catch pan.
10. Inspect and clean the magnetic drain plug for any debris.
11. Reinstall drain plug. Torque plug to 75–82 Nm (55–60 lbf·ft).

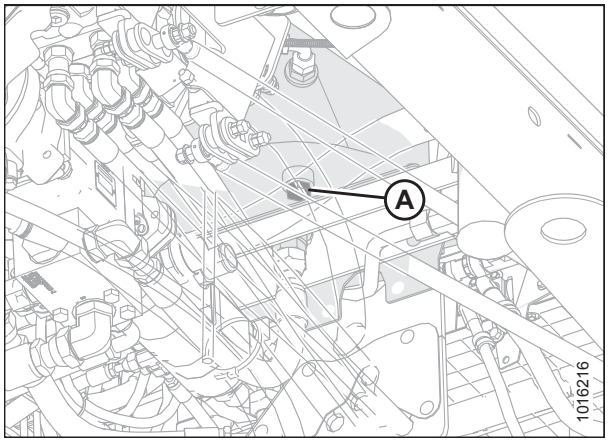

Figure 5.114: Hydraulic Oil Drain

12. Reinstall plug (A) on the hydraulic oil tank.
13. Close the hood. For instructions, refer to *5.3.2 Closing Hood, page 269*.
14. Dispose of used oil in a manner that complies with local rules and regulations.

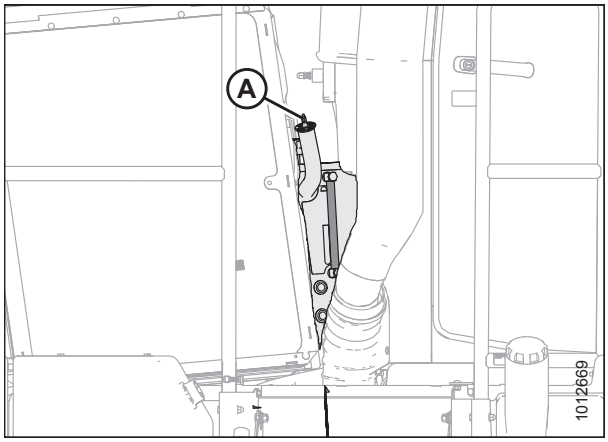

Figure 5.115: Reservoir Plug

5.12.3 Filling Hydraulic Oil

WARNING

To avoid bodily injury or death from unexpected startup of the machine, always stop the engine and remove the key from the ignition before leaving the operator's seat for any reason.

1. Park windrower on level ground, and lower header and reel so that lift cylinders are fully retracted.
2. Stop the engine and remove the key.
3. Open the hood. For instructions, refer to *5.3.1 Opening Hood, page 268*.
4. Turn plug handle (A) counterclockwise until loose and then remove plug by pulling straight out.

   NOTE:

   When filling oil at a fast rate, the screen element in the fill tube restricts the oil and makes it difficult for air to escape.

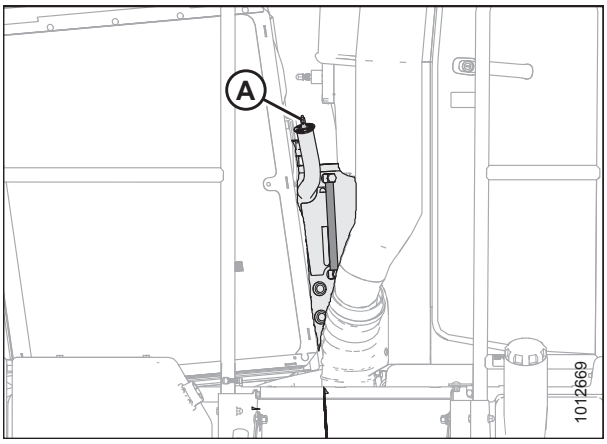

Figure 5.116: Plug Handle

5. To improve oil fill rate through the screen, open the breather cap (A) at the top of the tank to allow air to escape.

   IMPORTANT:

   Whenever the breather cap is opened, clean the area and take care to prevent debris from entering the tank through the opening.

6. Add oil to maintain the level between the low and full indicator marks. Refer to the inside back cover for hydraulic oil specifications and quantity.

   NOTE:

   When the sight glass is showing LOW, approximately 4 liters (1 US gallon) is required to reach FULL.

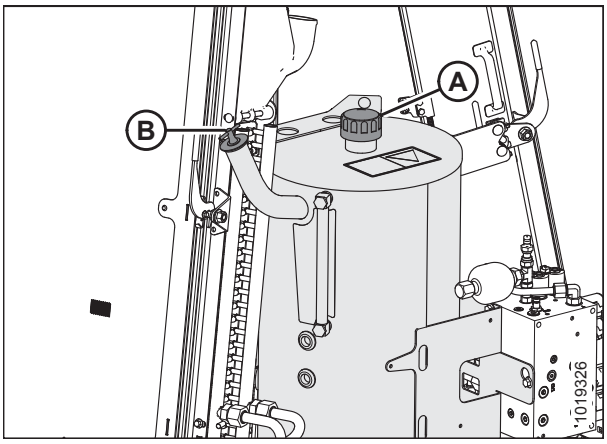

Figure 5.117: Hydraulic Oil Tank

7. Reinstall plug, and turn plug handle (B) clockwise until plug is secure.
8. Close breather cap (A).
9. Close the hood. For instructions, refer to *5.3.2 Closing Hood, page 269*.

5.12.4 Replacing the Diesel Exhaust Fluid Vent Hose Filter

The diesel exhaust fluid (DEF) vent hose filter should be replaced every 2000 hours.

WARNING

To avoid bodily injury or death from unexpected startup of the machine, always stop the engine and remove the key from the ignition before leaving the operator's seat for any reason.

1. Stop the engine, and remove the key.
2. Locate vent hose filter (B) below the DEF tank (A).

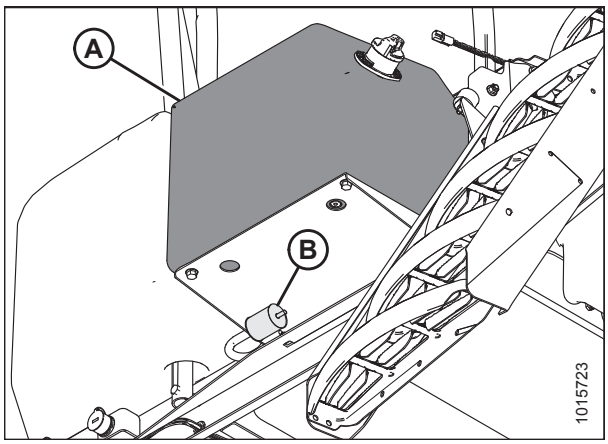

Figure 5.118: Vent Filter below DEF Tank

3. Pull vent hose filter (A) from the DEF tank vent hose.
4. Install the new vent hose filter (A).

   NOTE:

   Ensure arrow on the vent hose filter (A) points towards the DEF tank.

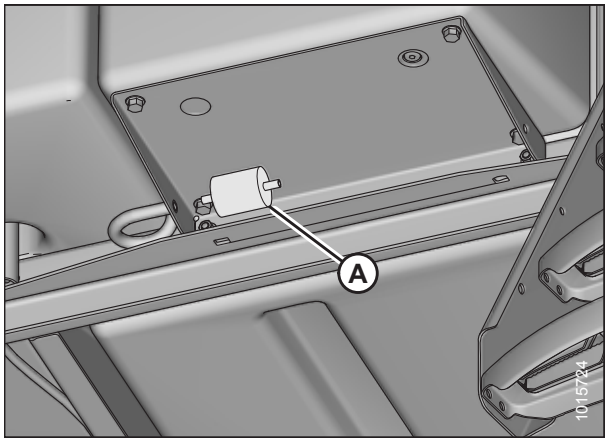

Figure 5.119: Vent Hose Filter below DEF Tank

5.12.5 General Engine Inspection

Engine inspection should be performed by your MacDon Dealer.

Refer to your engine manual for further information. (Owner's Manual QSB 4.5 and QSB 6.7 Engine Cummins #4021531 are supplied with your machine.)

5.13 Annual Service

Complete the following maintenance tasks annually. It is recommended that annual maintenance be done prior to start of operating season.

- Check battery charge and fluid level. Refer to *5.13.1 Batteries, page 333*.
- Check steering linkages. Refer to *5.13.2 Checking Steering Link Pivots, page 342*.
- Check A/C blower. Refer to *5.13.3 Air Conditioning Evaporator, page 344*.
- Check antifreeze concentration. Refer to *5.13.4 Checking Engine Coolant Strength, page 347*.

5.13.1 Batteries

Table 5.5 Battery Specification

Rating	Group	CCA (min)	Volt	Maximum Dimension
Heavy duty, off-road, vibration resistant	31A	760	12	334 x 188 x 232 mm (13 x 7.4 x 9.13 in.)

Maintaining a Battery

CAUTION

Do NOT attempt to service battery unless you have the proper equipment and experience to perform the job. Have it done by a qualified Dealer.

- Check battery charge **once a year**, more often if operating in cold weather. Hydrometer readings should be 1.260 to 1.300. Readings below 1.250 indicate charging is required. Refer to *Charging a Battery, page 335*.
- Keep batteries clean by wiping with a damp cloth.
- Keep all connections clean and tight. Remove any corrosion and wash terminals with a solution of baking soda and water. A light coating of grease on terminals (after cables are attached) will reduce corrosion.
- To prolong battery life, store batteries fully charged and at -7° to +26°C (+20° to +80°F). Check voltage after storage and recharge as needed according to battery and charger manufacturer recommendations.
- Do **NOT** stack storage batteries on top of each other.
- Test batteries every 4–6 months and recharge if necessary.
- Disconnect battery ground if storing the windrower for more than 3 months.

Opening Battery Cover

WARNING

To avoid bodily injury or death from unexpected startup of the machine, always stop the engine and remove the key from the ignition before leaving the operator's seat for any reason.

1. Stop the engine and remove the key.
2. Open hood. For instructions, refer to *5.3.1 Opening Hood, page 268*.

3. Lift up on the cab end of the cover (A) to disengage it from the retaining tab (B), and swing cover away from the frame.

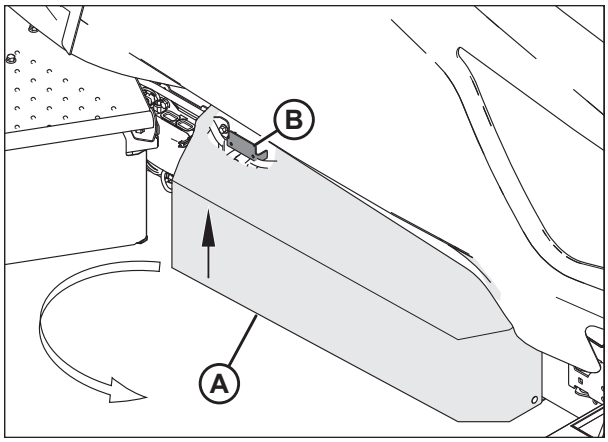

Figure 5.120: Battery Cover

Closing Battery Cover

1. Swing the cover (A) towards the windrower frame. Lift up on the cab end of the cover until it is secured by the retaining tab (B) on the frame.

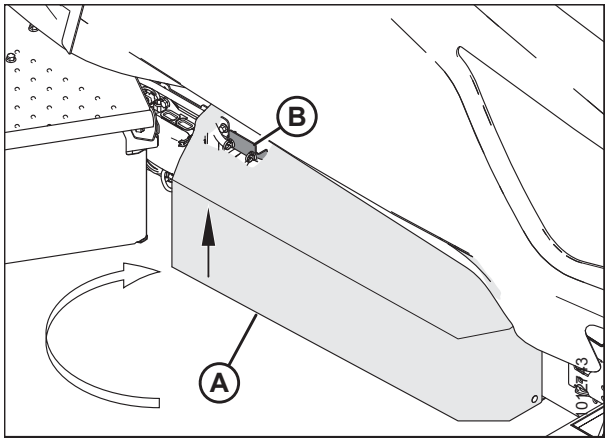

Figure 5.121: Battery Cover

Charging a Battery

CAUTION

- **Ventilate the area where batteries are being charged.**
- **Do NOT charge a frozen battery. Warm to 16°C (60°F) before charging.**
- **Do NOT connect or disconnect live circuits. To prevent sparks, turn off charger and connect positive cable first. PROTECT YOUR EYES.**
- **If charging battery in windrower, disconnect POSITIVE battery cable before connecting charger cable, then connect ground cable last, away from battery.**
- **Stop or cut back charging rate if battery feels hot, or is venting electrolyte. Battery temperature must NOT exceed 52°C (125°F).**
- **The maximum charge rate in amperes should be NO MORE than 1/3 of the battery's reserve capacity minute rating. If the terminal voltage exceeds 16.0 volts while charging, reduce the charge rate.**
- **Continue charging and reduce the rate as needed until a two-hour period results in no increase in voltage or decrease in current.**

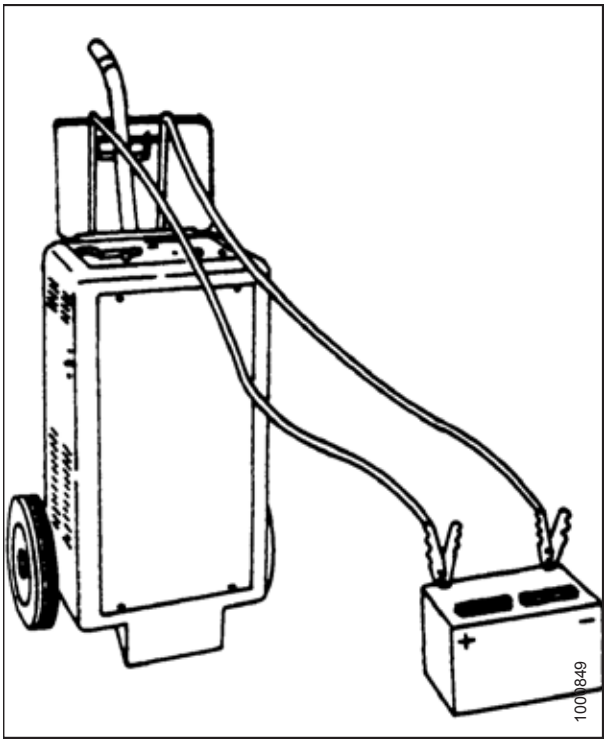

Figure 5.122: Battery Charging

Table 5.6 Voltage Chart

OCV[18]	State of Charge (%)	50 Amps	30 Amps	20 Amps	10 Amps
		Approximate battery charging time (minutes) to full charge at 27°C/80°F.[19]			
12.6	100	— Fully charged —			
12.4	75	20	35	48	90
12.2	50	45	75	95	180
12.0	25	65	115	145	280
11.8	0	85	150	195	370

WARNING

- **Follow all battery manufacturers' instructions and precautions.**
- **Gel and AGM (Absorbed Glass Mat) batteries require a voltage-limited charger. Charging a gel or AGM battery on a typical shop charger—even one time—may greatly shorten its life.**
- **If the electrolyte is accessible, verify that plates are covered before beginning to charge. At the end of charge, add distilled water as needed to bring levels to the proper height. If water is added, charge for an additional 30 minutes to mix. If electrolyte levels are low, but battery is not accessible, remove battery from service.**

18. Open circuit voltage with no charging/discharging for 8 hours or more.
19. Charging time depends on battery capacity, condition, age, temperature, and efficiency of charger.

CAUTION

Follow all instructions and precautions supplied by the battery charger manufacturer, including the following:

- **Charge at recommended rates and times.**
- **Turn off charger prior to hook up to avoid dangerous sparks. Wear proper eye protection.**
- **Reduce charge rate if the terminal voltage is higher than 16.0 volts while charging. The maximum charge rate in amperes should NOT exceed 1/3 of the battery's reserve capacity minute rating.**
- **Continue charging if there is no change in voltage or current for a two-hour period, and reduce the rate as needed.**
- **If the battery case gets hot during charging or spews large amount of gasses, temporarily stop charging.**

IMPORTANT:

NEVER overcharge batteries. Excessive charging will shorten battery life.

WARNING

To avoid bodily injury or death from unexpected startup of the machine, always stop the engine and remove the key from the ignition before leaving the operator's seat for any reason.

1. Stop the engine and remove the key.
2. Open the battery cover. For instructions, refer to *Opening Battery Cover, page 333*.
3. Remove the red plastic covers from positive cable clamps (B).
4. Remove the black plastic covers from negative terminals (A).
5. If charging battery in windrower, disconnect **positive** battery cable (A), then connect charger cable to positive post. Connect charger ground cable to the engine block last, away from battery.
6. Charge batteries in accordance with charger manufacturer's instructions.

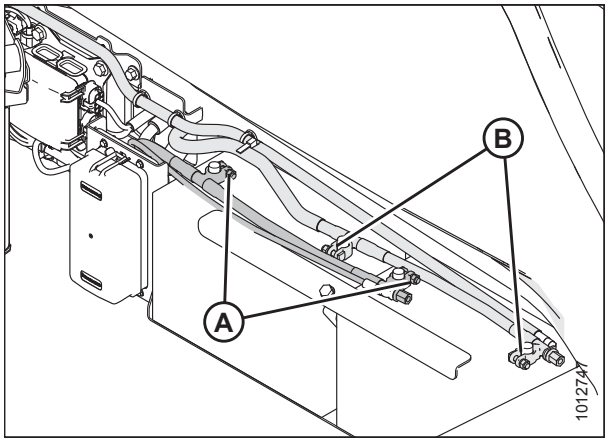

Figure 5.123: Batteries

Boosting a Battery

If boosting a battery is required, connect boost cables in the exact order described below.

WARNING

- **Gas given off by batteries is explosive. Keep sparks and flames away from batteries.**
- **Make last connection and first disconnection at the point farthest away from the batteries.**
- **Wear protective eyewear when using a booster battery.**
- **Be sure everyone is clear of machine when starting engine. Start engine from operator's station only.**

Connecting booster cables

1. To access the windrower batteries, remove the battery cover. For instructions, refer to *Opening Battery Cover, page 333*.
2. Pull back the red rubber battery terminal cover and connect one end of the positive (+) booster cable to positive (+) post (A) on the dead battery.
3. Connect the other end of the positive (+) booster cable to the positive (+) post (B) on the booster battery.
4. Connect one end of the negative (-) booster cable to negative (-) post (C) on the booster battery.
5. Connect the other end of the negative (-) booster cable (D) to a clean, unpainted, solid metal part on the engine of the dead unit.

WARNING

To minimize the chance of an explosion, avoid connecting the negative boosting cable to the negative post on the dead battery.

6. Turn ignition switch in cab as with normal start-up.

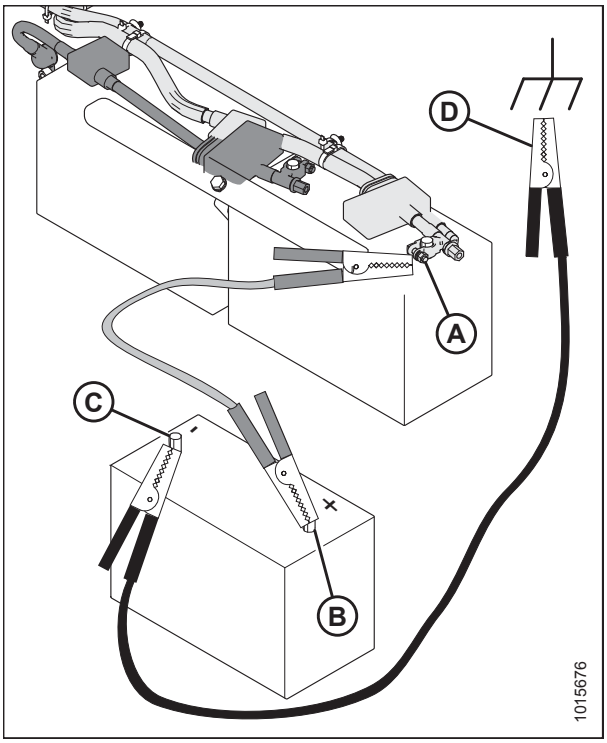

Figure 5.124: Attaching Booster Cables

Removing booster cables

CAUTION

Spark hazard. When disconnecting booster cables, do NOT allow the cable clamps to touch each other.

1. Disconnect the negative (-) booster cable (A) from the engine of the unit that was boosted.
2. Disconnect the other end of the negative (-) booster cable from the negative (-) battery post (B) of the booster battery.
3. Disconnect the positive (+) booster cable from the positive (+) battery post (C) of the booster battery.
4. Disconnect the other end of the positive (+) booster cable from the positive (+) battery post (D) of the boosted battery.
5. Replace the black and red rubber battery terminal covers.
6. Close the battery cover. For instructions, refer to *Closing Battery Cover, page 334*.

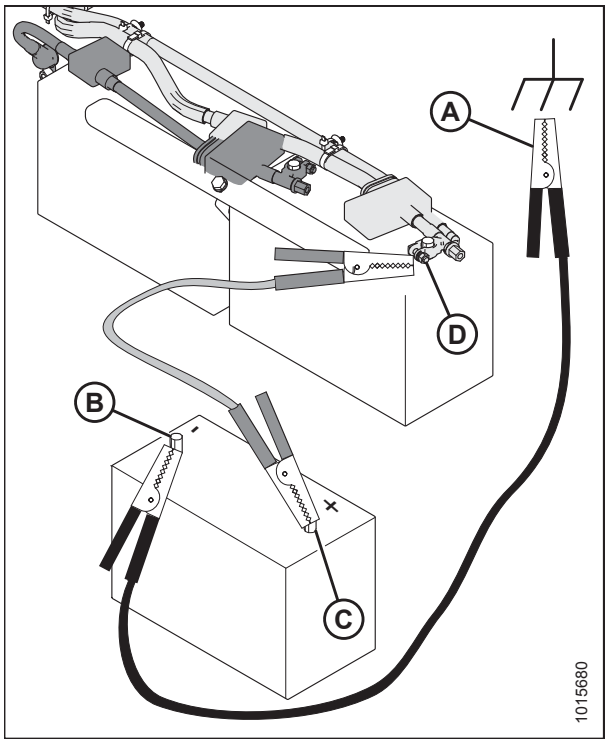

Figure 5.125: Removing Booster Cables

Removing a Battery

CAUTION

Do NOT attempt to service battery unless you have the proper equipment and experience to perform the job. Have it done by a qualified Dealer.

WARNING

To avoid bodily injury or death from unexpected startup of the machine, always stop the engine and remove the key from the ignition before leaving the operator's seat for any reason.

1. Stop the engine and remove the key.
2. Open the battery cover. For instructions, refer to *Opening Battery Cover, page 333*.
3. Disconnect the battery harness. For instructions, refer to *Disconnecting a Battery, page 340*.
4. Loosen bolt (A) until securing strap (B) can be removed.
5. Lift batteries off the support.

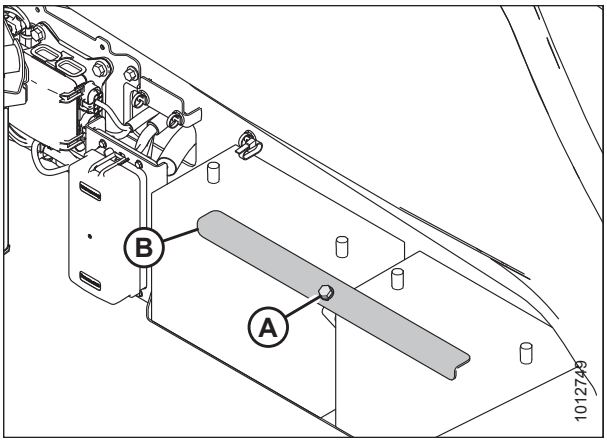

Figure 5.126: Battery Location

Installing a Battery

Table 5.7 Battery Specification

Rating	Group	CCA (min)	Volt	Maximum Dimension
Heavy duty, off-road, vibration resistant	31A	760	12	334 x 188 x 232 mm (13 x 7.4 x 9.13 in.)

1. Position new batteries on battery support.

   NOTE:

   Ensure that positive terminal is positioned on the right side of the battery when facing them.
2. Install strap (B) with secure with bolts (A).
3. Connect battery cables. For instructions, refer to *Connecting Batteries, page 340*.
4. Close battery cover. For instructions, refer to *Closing Battery Cover, page 334*.

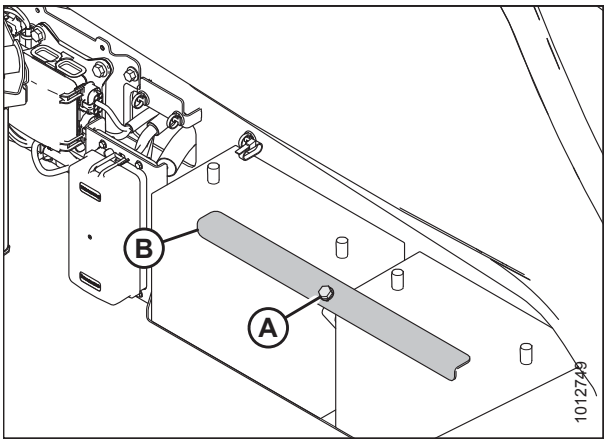

Figure 5.127: Battery Location

Disconnecting a Battery

WARNING

To avoid bodily injury or death from unexpected startup of the machine, always stop the engine and remove the key from the ignition before leaving the operator's seat for any reason.

1. Stop the engine and remove the key.
2. Open the battery cover. For instructions, refer to *Opening Battery Cover, page 333*.
3. Remove the black plastic covers from the negative cable clamps (A). Loosen clamps and remove cable from batteries.
4. Remove the red plastic covers from positive cable clamps (B). Loosen the clamps and remove cable from batteries.

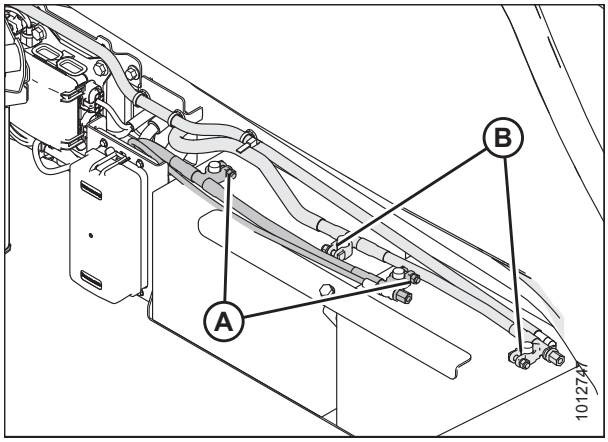

Figure 5.128: Battery Location

Connecting Batteries

WARNING

To avoid bodily injury or death from unexpected startup of the machine, always stop the engine and remove the key from the ignition before leaving the operator's seat for any reason.

1. Move latch (A) towards right cab-forward side of windrower.
2. Grasp louver (B), and lift the hood to open.

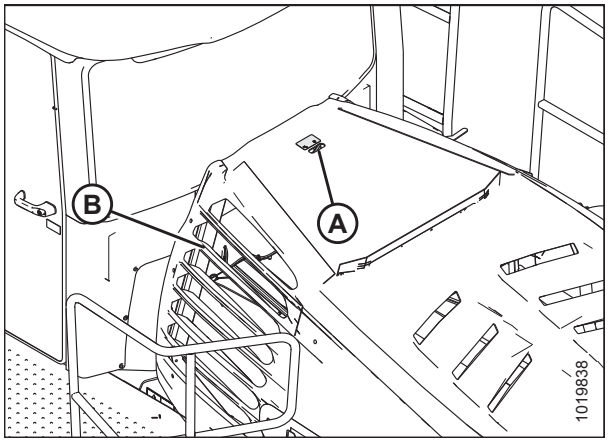

Figure 5.129: Engine Compartment Hood

3. Lift up on cab-end of cover (A) to disengage it from the retaining tab (B), and swing cover away from frame.

   IMPORTANT:

   Batteries are negative grounded. Always connect starter cable to the positive (+) terminal of battery and battery ground cable to negative (–) terminal of battery. Reversed polarity in battery or alternator may result in permanent damage to electrical system.

   NOTE:

   Before connecting harness to batteries, ensure that positive terminal is positioned on the right side of battery when installed on battery support.

4. If installing a new battery, remove plastic caps from battery posts.

5. Attach red positive (+) cable terminals to positive posts (B) on batteries and tighten clamps. Reposition plastic covers onto clamps.

6. Attach black negative (–) cable terminals to negative posts (A) on batteries and tighten clamps. Reposition plastic covers onto clamps.

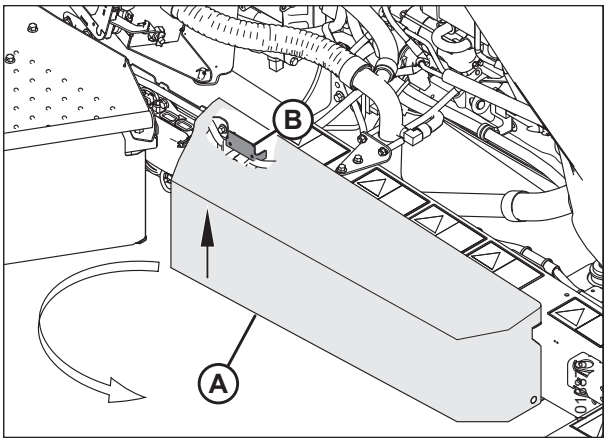

Figure 5.130: Battery Location

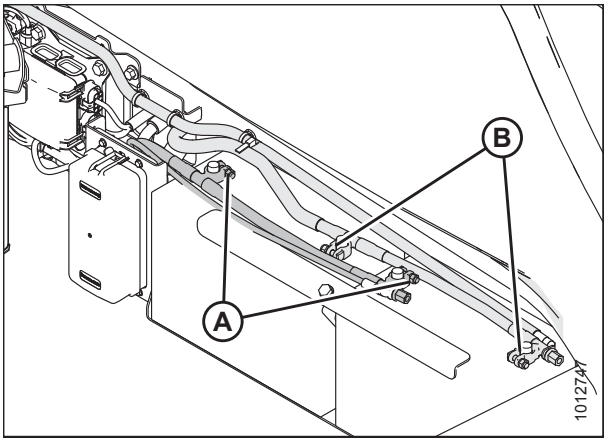

Figure 5.131: Batteries

7. Swing the cover (A) towards the windrower frame. Lift up on the cab end of the cover until it is secured by the retaining tab (B) on the frame.

8. Grasp hood by the louver (C) and lower until hood engages latch.

   NOTE:

   Check that latch lever is not tilted to ensure hood is latched.

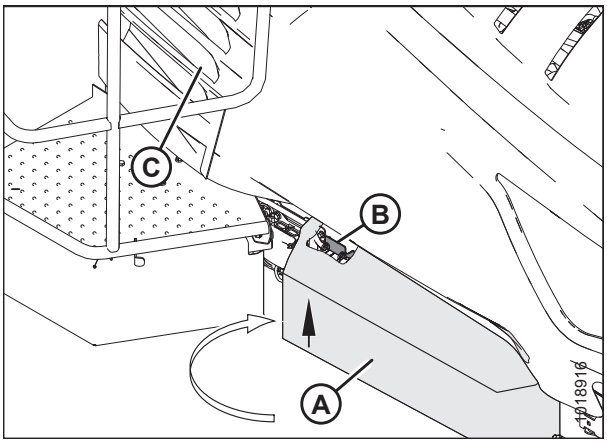

Figure 5.132: Battery Cover

Auxiliary Power Posts

The auxiliary power posts are a convenient way to connect remote auxiliary fuel pumps for in-field filling of an M1240 windrower fuel tank, trickle charging or maintaining a battery charge.

IMPORTANT:

The auxiliary power posts are **NOT** meant for continuous duty. Remote fill pump motors have a high gallons per minute (GPM) rate, and most models can fill an M1240 fuel tank within 10–15 minutes.

IMPORTANT:

The auxiliary power posts are **NOT** to be used as battery boost posts. Boosting a battery from these posts can result in blowing the auxiliary power posts' positive terminal fuse.

IMPORTANT:

Ensure the device being connected to the power posts has an amperage rating less than that of the maximum fuse rating listed on the auxiliary power posts' decal (A). 30 Amp loads and smaller are recommended as anything larger may blow the fuse if the device has a high in-rush current characteristic.

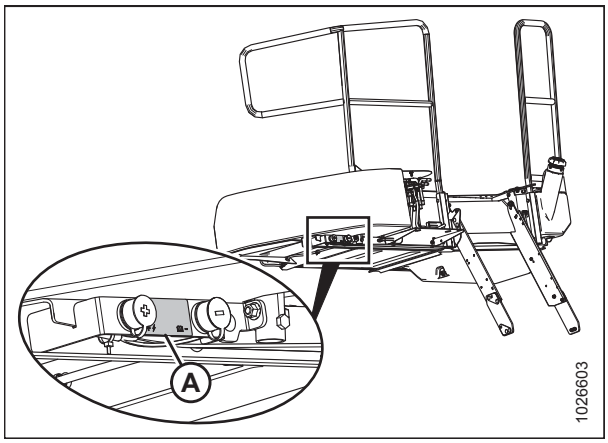

Figure 5.133: Auxiliary Power Posts Decal

5.13.2 Checking Steering Link Pivots

The following checks should be performed every year:

WARNING

To avoid bodily injury or death from unexpected startup of the machine, always stop the engine and remove the key from the ignition before leaving the operator's seat for any reason.

1. Place ground speed lever (GSL) (A) in PARK, shut down engine, and remove key.

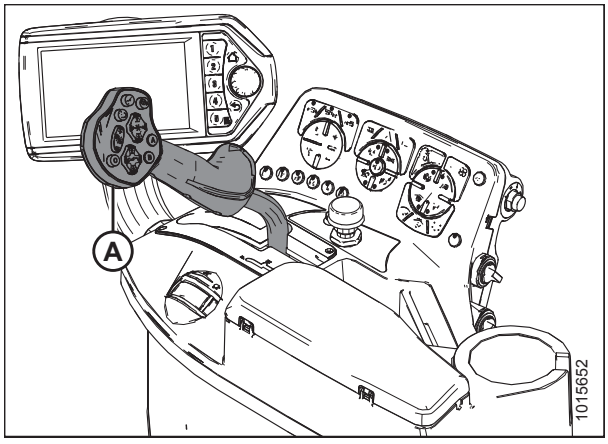

Figure 5.134: Console

2. Check steering rod bolts (A) for looseness.
3. Ensure ball joints (B) feel firm, but can be moved by hand.

NOTE:

Ball joints that are excessively loose or too stiff to pivot by hand should be replaced.

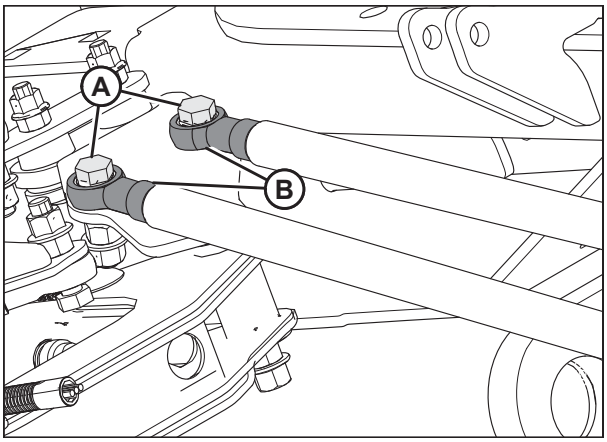

Figure 5.135: Steering Rods Beneath the Cab

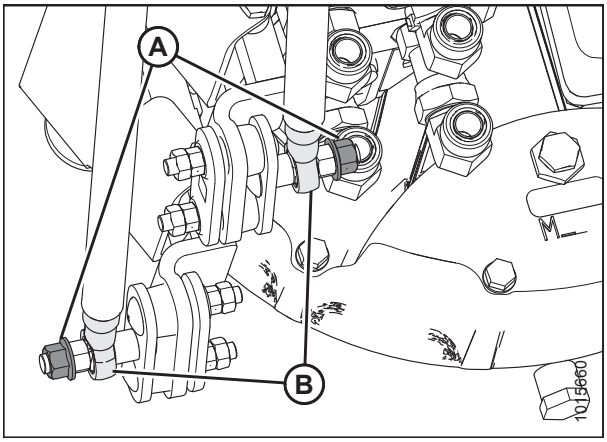

Figure 5.136: Steering Rods – Pump End

4. Check steering link bolts (A) for looseness.
5. Ensure ball joints (B) feel firm but can be moved by hand.

NOTE:

Ball joints that are excessively loose or too stiff to pivot by hand should be replaced.

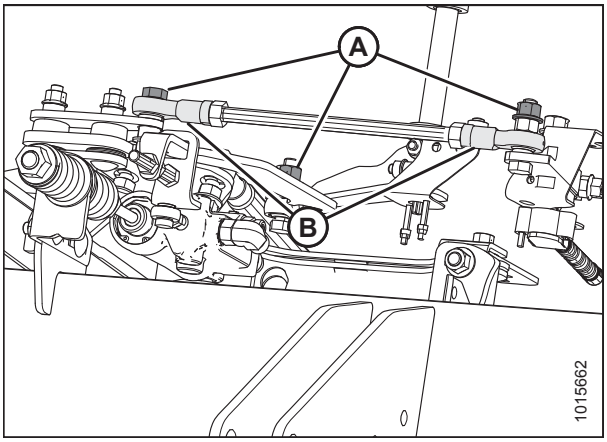

Figure 5.137: Steering Link

6. If bolts are loose:
   a. Back off jam nut (A).
   b. Tighten inside nut (B) to 65–72 Nm (48–53 lbf·ft).
   c. Hold inside nut (B) and tighten jam nut (A) to 65–72 Nm (48–53 lbf·ft).
7. See your MacDon Dealer to replace any loose steering link ball joints or steering rod ball joints.
8. After replacing parts or making adjustments, perform checks for neutral interlock and steering lock. Refer to *5.10.2 Safety Systems, page 319*.

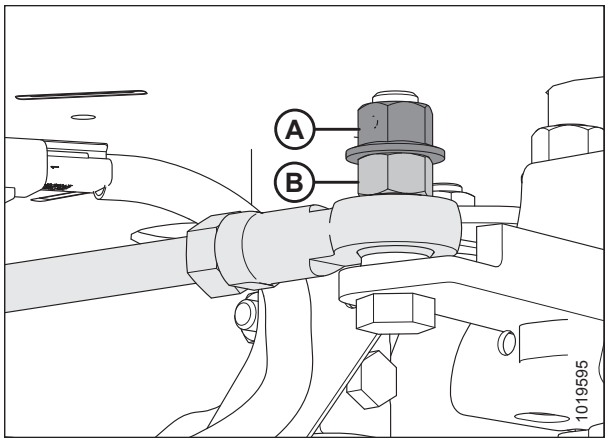

Figure 5.138: Steering Link

5.13.3 Air Conditioning Evaporator

Check the air conditioning evaporator for cleanliness every year. If the air conditioning system produces insufficient cooling, the evaporator fins may be clogged. Fins will clog up from the side opposite the blowers. The evaporator is located inside the heating air conditioning unit under the cab. To access the evaporator, remove the cover from the air conditioning unit.

Removing Air Conditioning Cover

WARNING

To avoid bodily injury or death from unexpected startup of the machine, always stop the engine and remove the key from the ignition before leaving the operator's seat for any reason.

1. Loosen the clamps (A) on the two drain hoses and pull the hoses off the air conditioning (A/C) drain tubes.

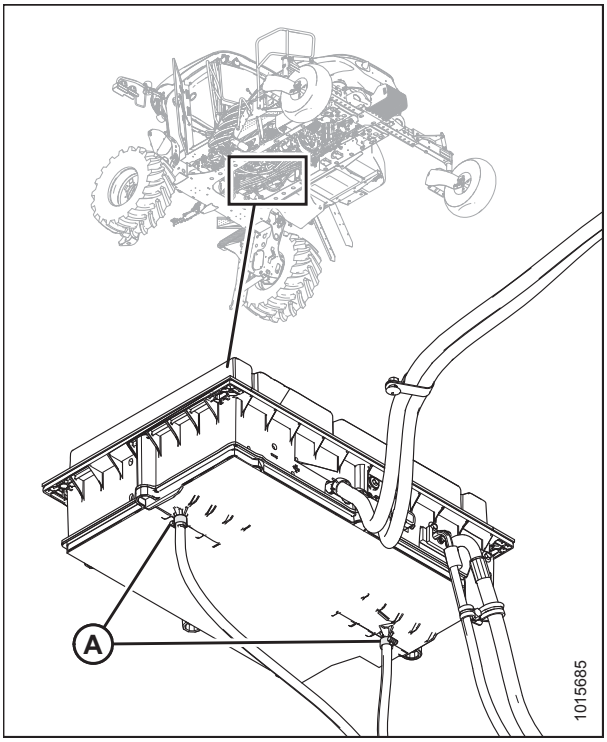

Figure 5.139: A/C Evaporator Box

2. Remove the eight fasteners (A) that attach the cover to the housing. Remove the cover (B).

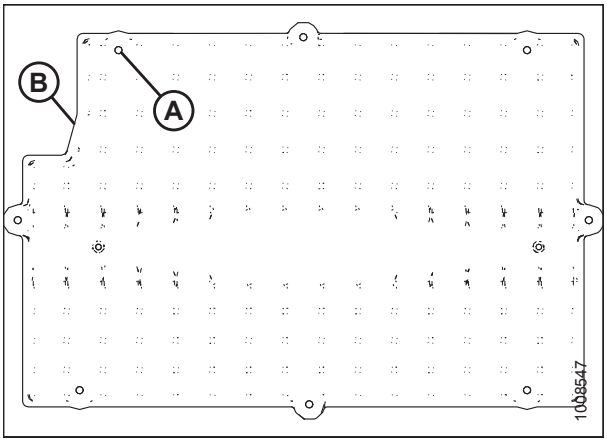

Figure 5.140: A/C Cover

Cleaning Air Conditioning Evaporator Core

WARNING

To avoid cuts from evaporator fins, do NOT use bare hands to brush away clogs.

1. Remove the air conditioning (A/C) cover. For instructions, refer to *Removing Air Conditioning Cover, page 345*.
2. Use a vacuum cleaner or compressed air to remove dirt from inside the housing.
3. Blow compressed air through the evaporator fins from the blower side (A) first as shown. Direct the air straight into the evaporator to prevent fin damage. A nozzle extension makes this procedure easier.
4. Repeat the previous step from the side (B) opposite the blowers.

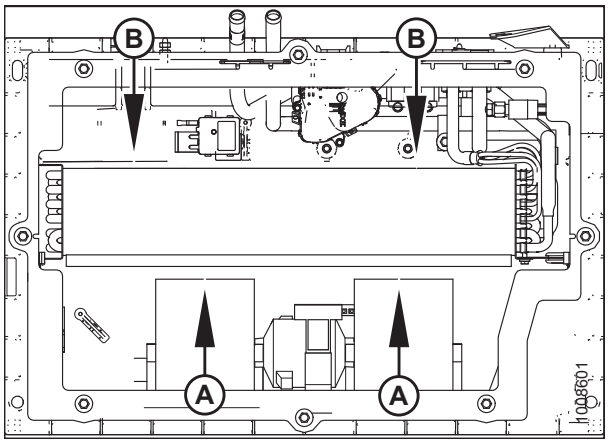

Figure 5.141: A/C Evaporator Core

5. If you can't feel the compressed air blowing through the evaporator core, proceed as follows:
   a. Protect the blower motor (A) from water.
   b. Soak the evaporator core (B) with warm water using a low pressure hose. Let soak for several minutes.
   c. Blow compressed air through the core from the blower side (C).
   d. Repeat the soaking procedure until air blows through the evaporator freely.

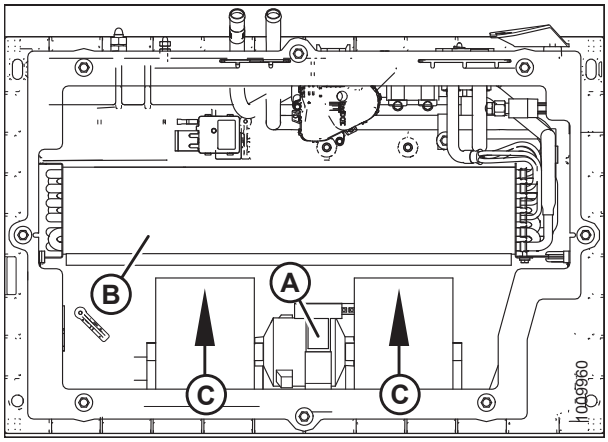

Figure 5.142: A/C Evaporator Core

Installing Air Conditioning Cover

1. Straighten any bent fins.
2. Position cover (B) and attach with eight screws (A).

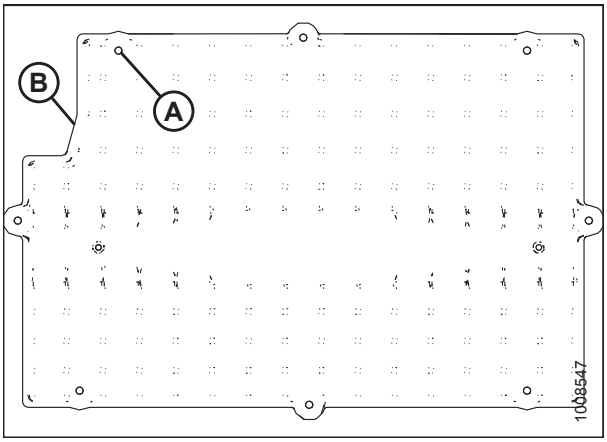

Figure 5.143: Air Conditioning Cover

3. Reattach drain hoses to drain tubes and secure with hose clamps (A). Tighten bolts to 7–7.8 Nm (40–45 lbf·in).

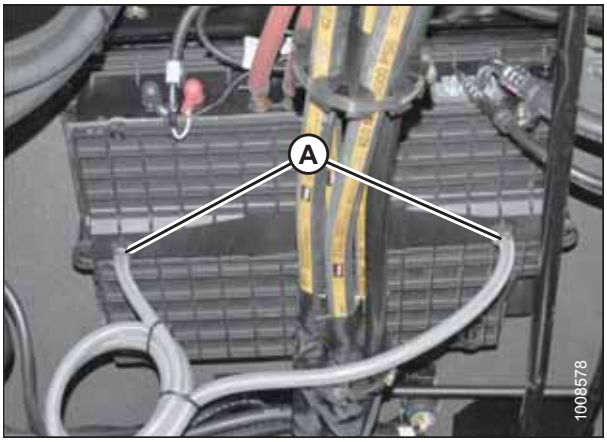

Figure 5.144: Air Conditioning Cover

5.13.4 Checking Engine Coolant Strength

Check the antifreeze in the pressurized coolant tank with a tester every year, preferably before off-season storage. Antifreeze is essential in any climate. It broadens the operating temperature range by lowering the coolant freezing point and by raising its boiling point. Antifreeze also contains rust inhibitors and other additives to prolong engine life.

CAUTION

To avoid personal injury from hot coolant, do NOT turn pressurized coolant tank cap until engine cools.

WARNING

To avoid bodily injury or death from unexpected startup of the machine, always stop the engine and remove the key from the ignition before leaving the operator's seat for any reason.

1. Stop the engine and remove the key.
2. Open the hood. For instructions, refer to *5.3.1 Opening Hood, page 268*.

IMPORTANT:

If antifreeze strength is not adequate, do **NOT** drain cooling system to protect against freezing. System may not drain completely, and damage from freezing could still result.

3. Remove the pressurized coolant tank cap (A).

   IMPORTANT:

   Turn the cap (A) counterclockwise to the first notch to relieve pressure before removing cap completely.

4. Check the coolant in the pressurized coolant tank using an antifreeze tester. Tester should indicate protection to temperatures of -34°C (-30°F).

5. Inspect the pressurized coolant tank cap as follows before reinstalling:

   a. Check the gasket for cracks or deterioration, and replace the cap if necessary.

   b. Check that the spring in the cap moves freely. Replace the cap if spring is stuck.

6. Install pressurized coolant tank cap (A).

7. Close the hood. For instructions, refer to *5.3.2 Closing Hood, page 269*.

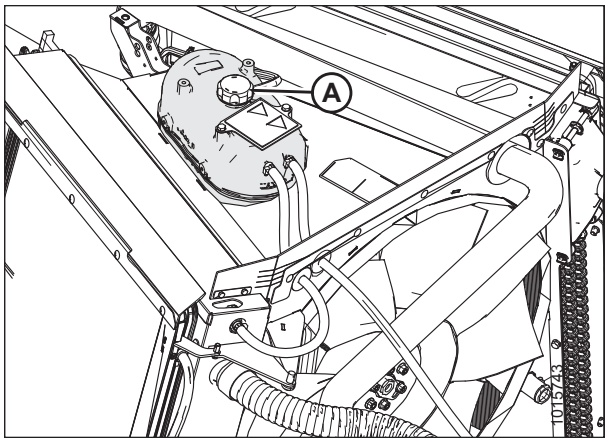

Figure 5.145: Coolant Tank

5.14 Maintenance as Required

This section details service procedures that should be done as they are required.

5.14.1 Seat Belts

- Keep sharp edges and items that can cause damage away from the belts.
- Check belts, buckles, retractors, tethers, slack take-up system, and mounting bolts for damage.
- Check that bolts are tight on the seat bracket or mounting.
- Replace all parts that have damage or wear.
- Replace belts that have cuts that can weaken the belt.
- Keep seat belts clean and dry. Clean only with a soap solution and warm water. Do **NOT** use bleach or dye on the belts, as this may weaken the material.

5.14.2 Draining Fuel Tank

Draining the fuel tank is necessary to remove old or contaminated fuel.

WARNING

To avoid bodily injury or death from unexpected startup of the machine, always stop the engine and remove the key from the ignition before leaving the operator's seat for any reason.

WARNING

- **To avoid personal injury or death from explosion or fire, do NOT smoke or allow flame or sparks near fuel tank when refueling.**
- **NEVER refuel the windrower when the engine is hot or running.**
- **To avoid electric discharge and the risk of a fire or explosion, ensure that the fuel delivery system is properly bonded and grounded. A bonded fuel delivery system has an electrically conductive and unbroken connection between all components of the fuel delivery system (fuel supply tank, transfer pump, transfer hose, nozzle, and others). A wire connection from the fuel delivery system to the machine chassis will equalize the static electric potential between the two machines, further reducing the chance of a static electric discharge. A properly grounded fuel delivery system has an electrically conductive connection from the fuel delivery system tank to earth ground to allow static and electrical charge dissipation.**

1. Stop the engine and remove the key.
2. Locate the fuel tank on the right side of the windrower frame.

3. Place a container under plug (A). The fuel tank holds 519 liters (137 gallons) total.
4. Loosen plug (A), and drain the tank.
5. Add some clean fuel to tank to flush out any remaining contaminants.

   NOTE:

   Do **NOT** refill the fuel tank if you need to work on the system. Refill tank when work is completed. For instructions, refer to *5.6.7 Filling Fuel Tank, page 289*.

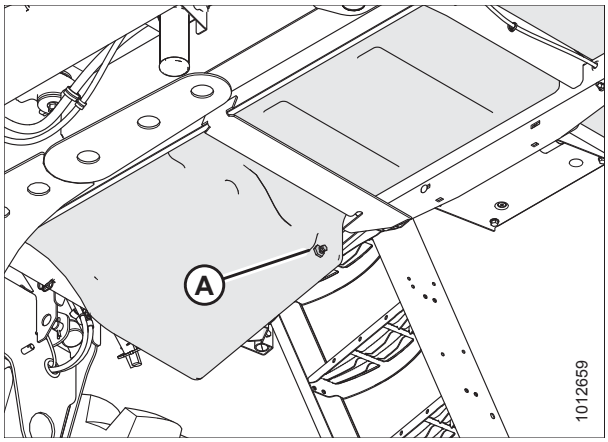

Figure 5.146: Drain Plug

5.14.3 Draining the Diesel Exhaust Fluid Tank

It is necessary to drain the diesel exhaust fluid (DEF) tank when the DEF is contaminated or if storing the windrower for a period greater than six months.

WARNING

To avoid bodily injury or death from unexpected startup of the machine, always stop the engine and remove the key from the ignition before leaving the operator's seat for any reason.

1. Stop the engine and remove the key.
2. Place a drain pan under the DEF tank (B). The drain pan should be large enough to hold 29 liters (7.5 US gallons).

   IMPORTANT:

   Spilled DEF must be contained and absorbed by non-combustible absorbent material like sand and then shovelled to a suitable container for disposal. If spilled on tank or any surface of the vehicle, rinse thoroughly with water as DEF is corrosive.

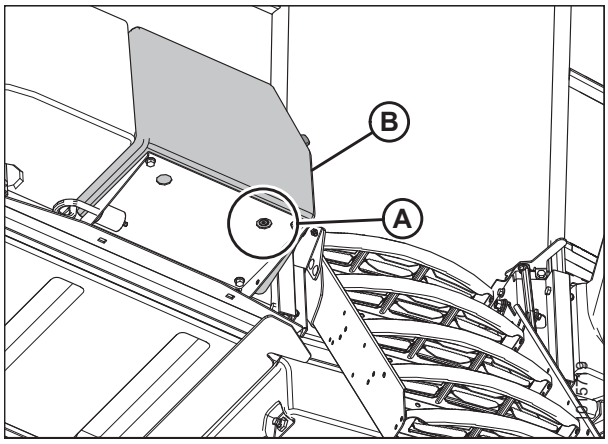

Figure 5.147: View from beneath Tank

CAUTION

Avoid contact with eyes. In case of contact, rinse immediately with water for 15 minutes.

3. Remove the drain plug (A) from under the tank (B) and drain.
4. Add some distilled water to the tank (B) to flush out remaining contaminants.
5. Drain the distilled water that was used to clean the tank.
6. Reinstall drain plug (A) into the tank (B).
7. Refill DEF tank. For instructions, refer to *5.6.8 Filling the Diesel Exhaust Fluid Tank, page 290*.

   NOTE:

   Do **NOT** refill if storing for **six months** or longer.

5.14.4 Belts

Tensioning Engine Fan Drive Belt

The engine fan drive belt is automatically tightened. Manual adjustment is **NOT** required.

Replacing Engine Fan Drive Belt

WARNING

To avoid bodily injury or death from unexpected startup of the machine, always stop the engine and remove the key from the ignition before leaving the operator's seat for any reason.

1. Stop the engine and remove the key.
2. Open the hood. For instructions, refer to *5.3.1 Opening Hood, page 268*.
3. Loosen compressor mounting hardware (A) and rotate the compressor (B) towards the engine to release tension on belts.
4. Remove belts (C) from compressor (B).

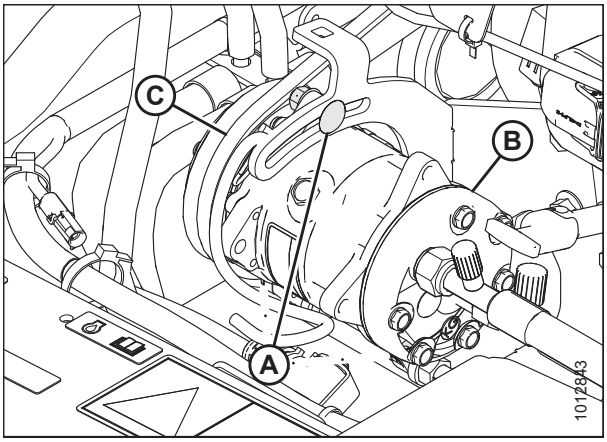

Figure 5.148: A/C Compressor

5. Insert the drive end of a 1/2 in. drive ratchet wrench into the belt tensioner (A).
6. Rotate tensioner counterclockwise until fan belt (B) can be slipped off pulley (C). Release tensioner and remove wrench.
7. Remove belt in order 1, 2, 3, as shown in Figure *5.149, page 351*.
8. Insert the drive end of a 1/2 in. drive ratchet wrench into the belt tensioner (A).
9. Rotate tensioner counterclockwise until belt (B) can be slipped onto pulley (C). Release tensioner and remove wrench.
10. Check that belt is properly seated in all pulley grooves.

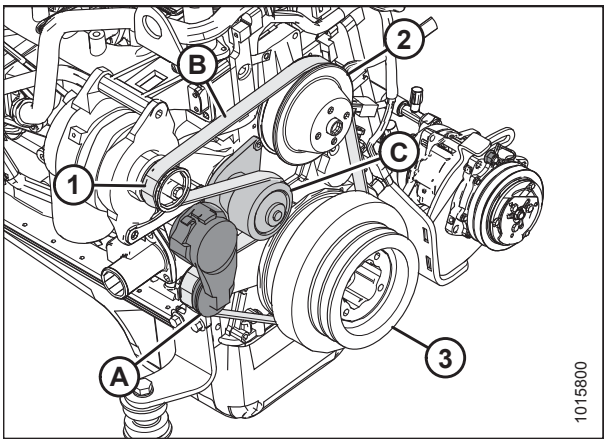

Figure 5.149: Engine Belt

11. Install compressor belts (C).
12. Pry compressor (B) away from engine so that a force of 45 N (10 lbf) deflects the belts (C) 5 mm (3/16 in.) at mid-span.

    NOTE:

    The tab (D) on bracket can be used as support for prying.
13. Tighten compressor mounting hardware (A).
14. Recheck tension and readjust as required.
15. Close the hood. For instructions, refer to *5.3.2 Closing Hood, page 269*.

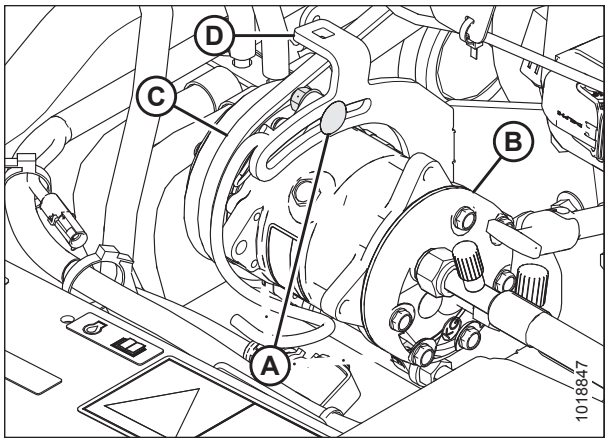

Figure 5.150: Air Conditioning (A/C) Compressor

Tensioning Air Conditioner Compressor Belts

WARNING

To avoid bodily injury or death from unexpected startup of the machine, always stop the engine and remove the key from the ignition before leaving the operator's seat for any reason.

1. Stop the engine, and remove the key from the ignition.
2. Open the hood. For instructions, refer to *5.3.1 Opening Hood, page 268*.
3. Loosen compressor mounting hardware (A).
4. Pry compressor (B) away from engine so that a force of 45 N (10 lbf) deflects the belts (C) 5 mm (3/16 in.) at mid-span.

    NOTE:

    The tab (D) on bracket can be used as support for prying.
5. Tighten compressor mounting hardware (A).
6. Recheck tension and readjust as required.
7. Close the hood. For instructions, refer to *5.3.2 Closing Hood, page 269*.

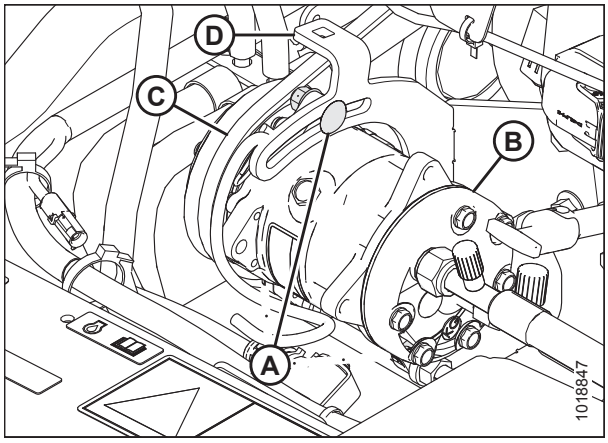

Figure 5.151: Air Conditioning (A/C) Compressor

Replacing Air Conditioner Compressor Belts

WARNING

To avoid bodily injury or death from unexpected startup of the machine, always stop the engine and remove the key from the ignition before leaving the operator's seat for any reason.

1. Stop the engine and remove the key.
2. Open the hood. For instructions, refer to *5.3.1 Opening Hood, page 268*.
3. Loosen compressor mounting hardware (A) and rotate the compressor (B) towards the engine to release tension on belts.
4. Remove belts (C) from compressor (B).
5. Install compressor belts (C).
6. Pry compressor (B) away from engine so that a force of 45 N (10 lbf) deflects the belts (C) 5 mm (3/16 in.) at mid-span.

   NOTE:

   The tab (D) on bracket can be used as support for prying.
7. Tighten compressor mounting hardware (A).
8. Recheck tension and readjust as required.
9. Close the hood. For instructions, refer to *5.3.2 Closing Hood, page 269*.

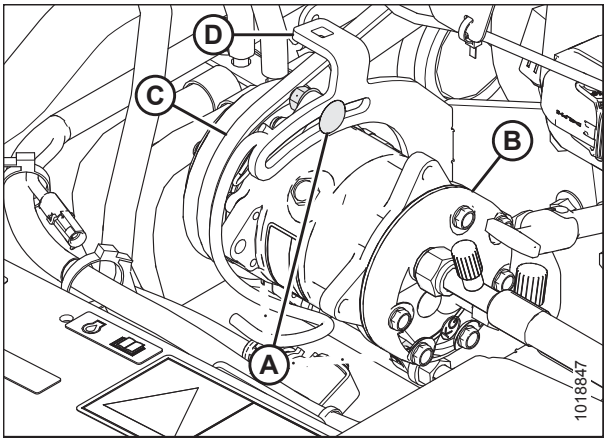

Figure 5.152: Air Conditioning (A/C) Compressor

5.14.5 Engine Speed

The maximum and idle engine speeds are factory set.

Refer to *2.2 Specifications, page 32* for detailed information. If specified speeds cannot be maintained, see your MacDon Dealer.

IMPORTANT:

To avoid voiding engine warranty, contact Cummins before removing components or starting repairs.

5.14.6 Lighting

Aligning Headlights – Engine-Forward

WARNING

To avoid bodily injury or death from unexpected startup of the machine, always stop the engine and remove the key from the ignition before leaving the operator's seat for any reason.

NOTE:

Header should be attached and raised to maintain proper windrower stance.

1. Position the windrower on level ground 7.5 m (25 ft.) (A) in front of a vertical surface as shown.

   NOTE:

   Check that casters are positioned underneath the windrower to properly align headlights.

2. Stop the engine and remove the key.

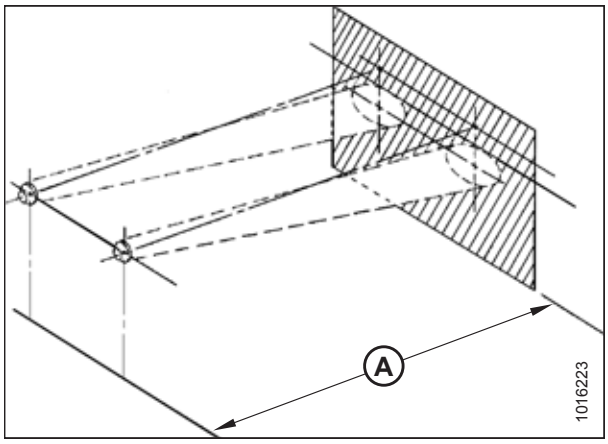

Figure 5.153: Windrower Headlight Positioning

3. Turn on ROAD lights (A) and switch to LOW BEAM.

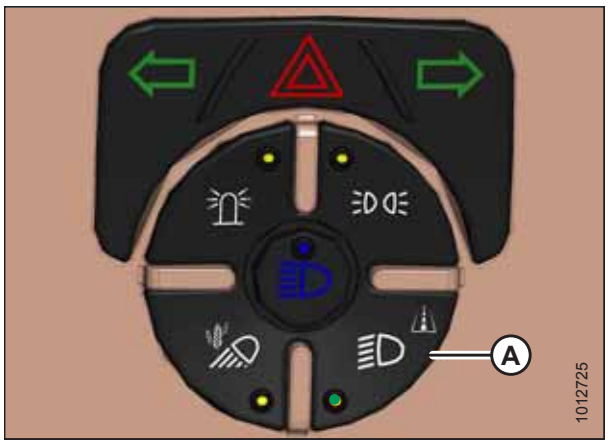

Figure 5.154: Road Light Switch

4. Adjust headlight (A) with adjusting bolts (B) so that the beam's maximum height above the ground does not exceed 1263 mm (49-3/4 in.) (C). Access the bolts by reaching under the headlight bezel (D).

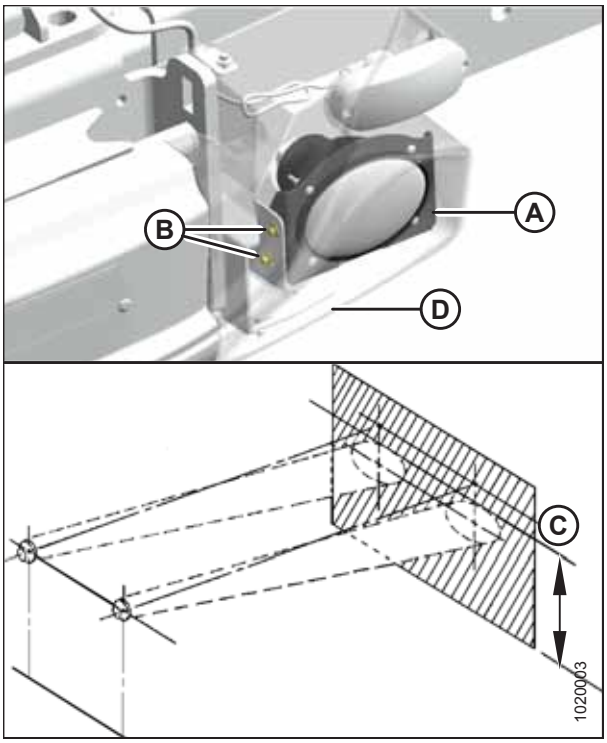

Figure 5.155: Left Engine-Forward Headlight – Right Opposite

Aligning Headlights – Cab-Forward

Adjust field lights when in the field (or equivalent) to suit Operator preference.

WARNING

To avoid bodily injury or death from unexpected startup of the machine, always stop the engine and remove the key from the ignition before leaving the operator's seat for any reason.

1. Hold onto handholds (A) on the cab front corners, and stand on header anti-slip strips.

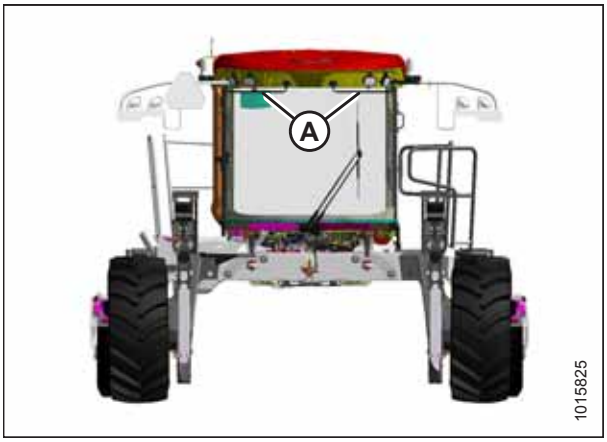

Figure 5.156: Windrower in Cab-Forward

2. Adjust lights by hand as required. Loosen/tighten nuts (A) if necessary.

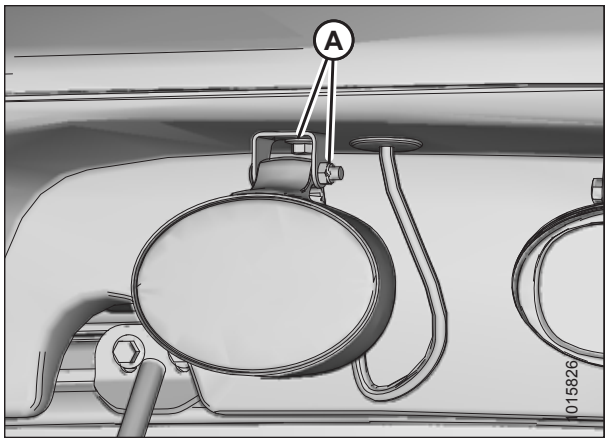

Figure 5.157: Left Cab-Forward Headlight – Right Opposite

Adjusting Front Field Lights

Adjust field lights when in the field (or equivalent) to best suit Operator preference.

WARNING

To avoid bodily injury or death from unexpected startup of the machine, always stop the engine and remove the key from the ignition before leaving the operator's seat for any reason.

1. Hold onto handholds (A) on the cab front corners, and stand on header anti-slip strips.

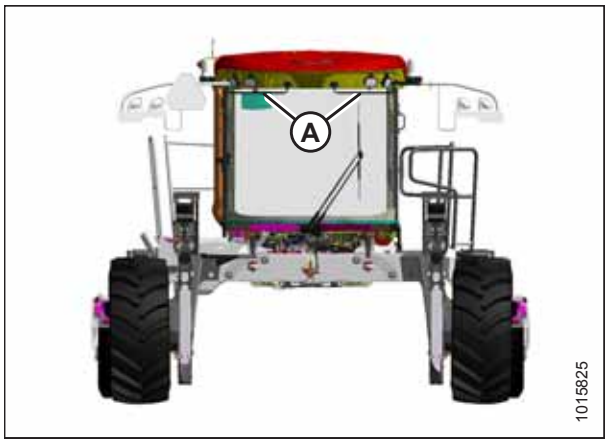

Figure 5.158: Windrower in Cab-Forward

2. Adjust lights by hand as required. Loosen nuts (A) if necessary and retighten.

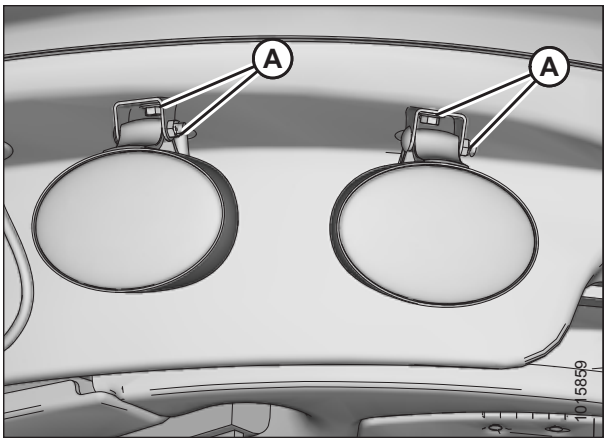

Figure 5.159: Left Cab-Forward Lights – Right Opposite

Adjusting Rear Roof Work Lights

Adjust lights to best suit Operator preference.

WARNING

To avoid bodily injury or death from unexpected startup of the machine, always stop the engine and remove the key from the ignition before leaving the operator's seat for any reason.

1. Stand on left or right platform (B) to access rear roof work lights (A).

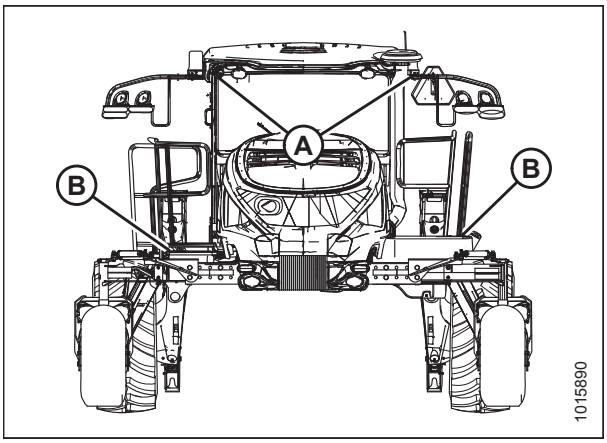

Figure 5.160: Rear Roof Work Lights

2. Adjust light by hand. Loosen or tighten bolts (A) if necessary.

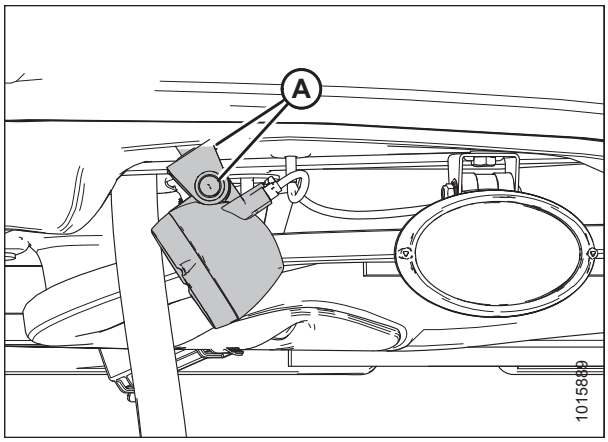

Figure 5.161: Left Rear Roof Work Light – Right Opposite

Adjusting Rear Swath Lights

Adjust rear swath lights to best suit Operator preference.

1. Stand on left or right platform (B) to access rear swath lights (A).

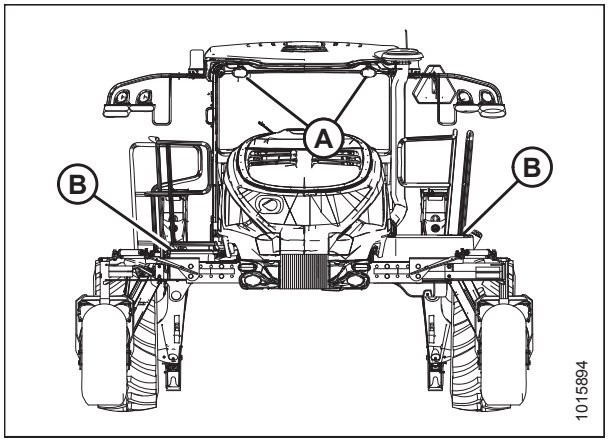

Figure 5.162: Rear Swath Lights

2. Adjust light position using bolts (A).

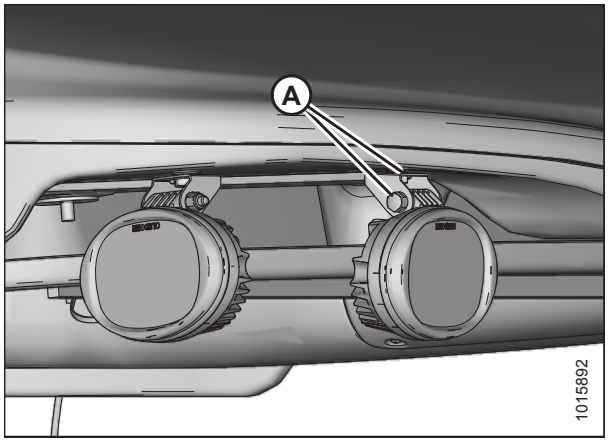

Figure 5.163: Left Rear Swath Light – Right Opposite

Replacing Bulbs in Standard Work Lights

The following procedure applies to all halogen bulbs shown in Figure *5.164, page 359*. If replacing engine-forward headlight bulbs, refer to *Replacing Headlight Bulb – Engine-Forward, page 360*.

WARNING

To avoid bodily injury or death from unexpected startup of the machine, always stop the engine and remove the key from the ignition before leaving the operator's seat for any reason.

Figure 5.164: Halogen Bulb Locations

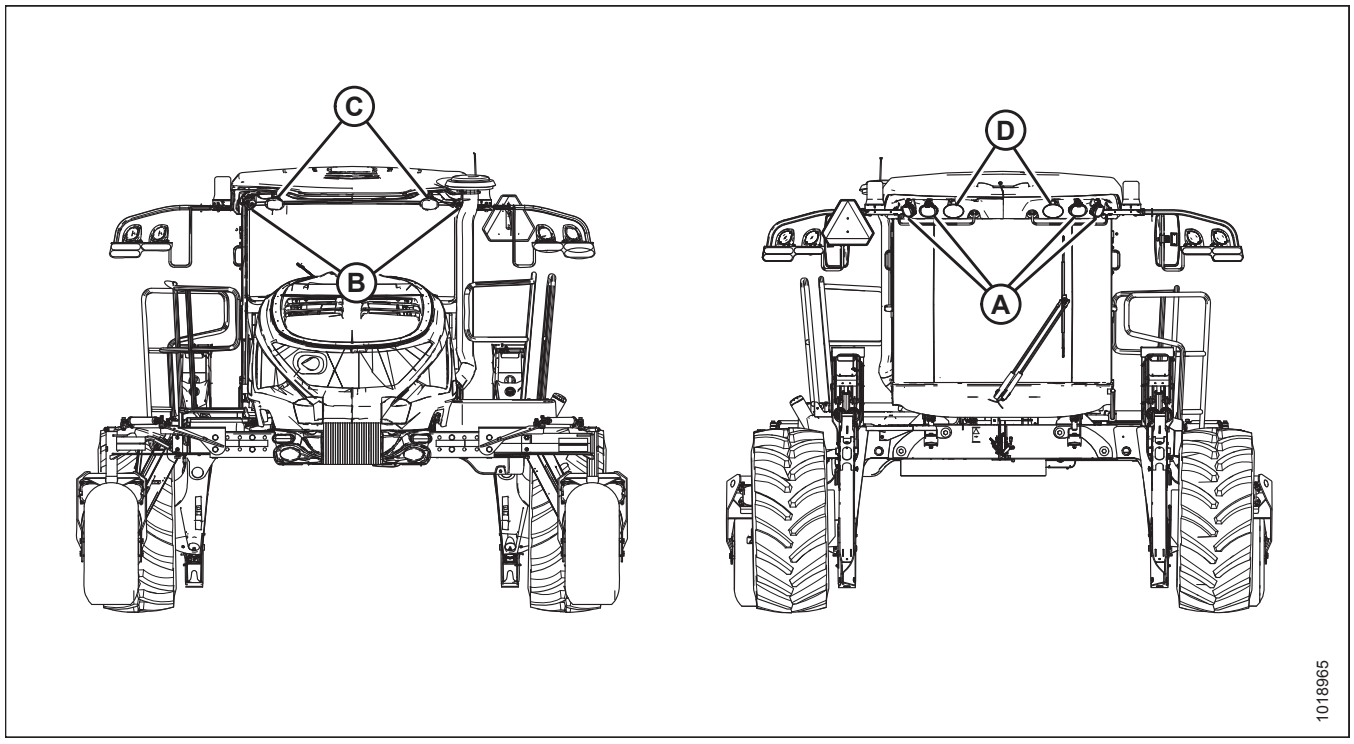

A - Front Work Lights (Field) **B - Stubble Lights (Rear)** **C - Rear Work Lights** **D - Headlights (Cab-Forward)**

NOTE:

Front work light shown.

1. Stop the engine and remove the key.
2. Disconnect wiring harness (A).
3. Remove rubber insulator boot (B).
4. Remove bulb from body.

   IMPORTANT:

   Do **NOT** touch the glass of the halogen bulb as the oils or other chemicals from your skin will cause the bulb to fail prematurely.
5. Align lugs on new bulb with slots in housing and push into place.
6. Install insulator boot (B) and wiring harness (A).

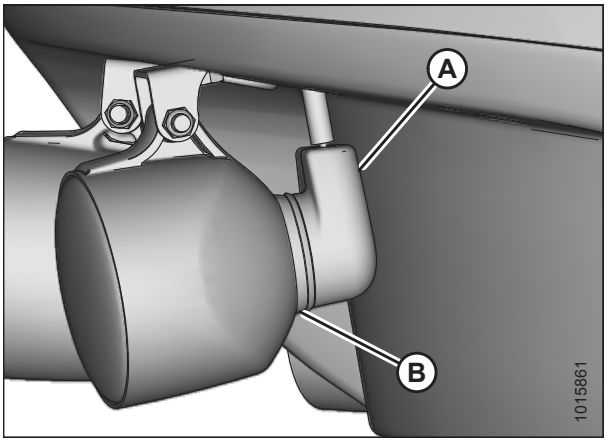

Figure 5.165: Front Work Light

Replacing Headlight Bulb – Engine-Forward

WARNING

To avoid bodily injury or death from unexpected startup of the machine, always stop the engine and remove the key from the ignition before leaving the operator's seat for any reason.

1. Turn off the windrower's engine and remove the key from the ignition.
2. Remove eight hex flange bolts (A) then remove headlight bezel assembly (B). Retain hardware.
3. Remove electrical connectors from red tail lights (C) to fully remove bezel (B).

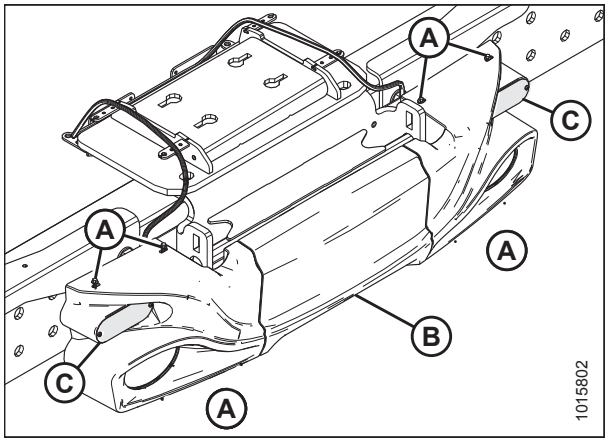

Figure 5.166: Headlight Bezel Assembly

4. Remove the two bolts (A) holding the headlight bracket (B) in place and slide bracket forward.
5. Pull wiring harness connector off the headlight and remove assembly (A).

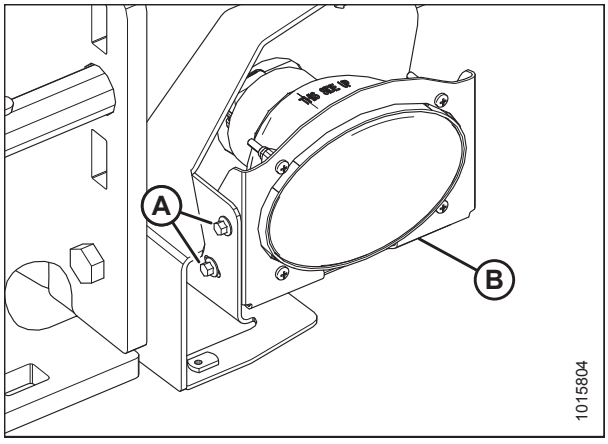

Figure 5.167: Right Side Headlight Shown – Left Side Similar

6. Remove four machine screws (A) and nylon nuts (B) and retain hardware.
7. Remove old headlight from bracket and replace with new headlight.

   IMPORTANT:

   Do **NOT** touch the glass of the halogen bulb as oils or other chemicals from your skin will cause the bulb to fail prematurely.

8. Attach headlight to bracket using four retained machine screws (A) and nylon nuts (B). Torque screws to 2.0–2.7 Nm (18–24 lbf·in).

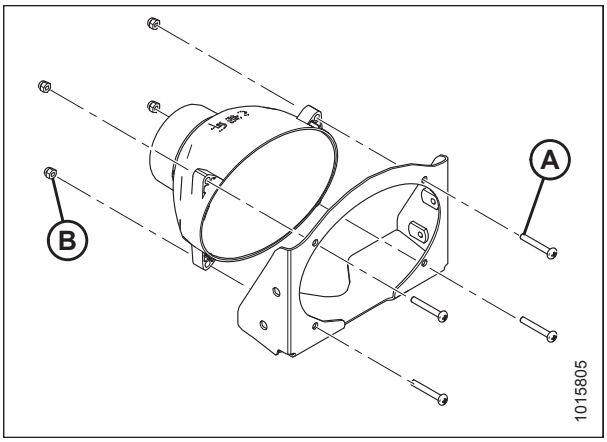

Figure 5.168: Right Side Headlight Shown – Left Side Similar

9. Connect wiring harness connector to headlight.
10. Attach headlight bracket assembly (B) using retained bolts (A).
11. Align new headlight. Refer to *Aligning Headlights – Engine-Forward, page 354*.

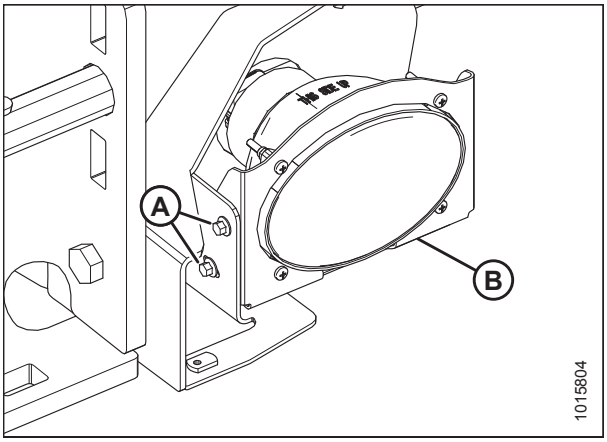

Figure 5.169: Right Side Headlight Shown – Left Side Similar

12. Attach electrical connectors to red tail lights (C).
13. Attach headlight bezel assembly (B) to frame using the eight retained hex flange bolts (A). Torque bolts to 2.0–2.7 Nm (18–24 lbf·in).

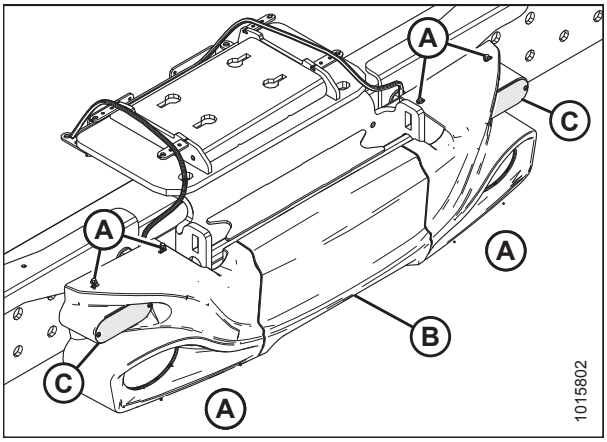

Figure 5.170: Headlight Bezel Assembly

Replacing LED Lights – Deluxe Cab Only

WARNING

To avoid bodily injury or death from unexpected startup of the machine, always stop the engine and remove the key from the ignition before leaving the operator's seat for any reason.

The M1240 Windrower deluxe cab is equipped with the following LED lights (MD #207062):

- Four LED field lights (A)
- Two LED stubble lights (B)
- Two LED rear work lights (C)

The bulb of an LED light cannot be replaced. If a light fails, please contact your MacDon Dealer for replacement parts.

Figure 5.171: LED Light Locations – Deluxe Cab Only

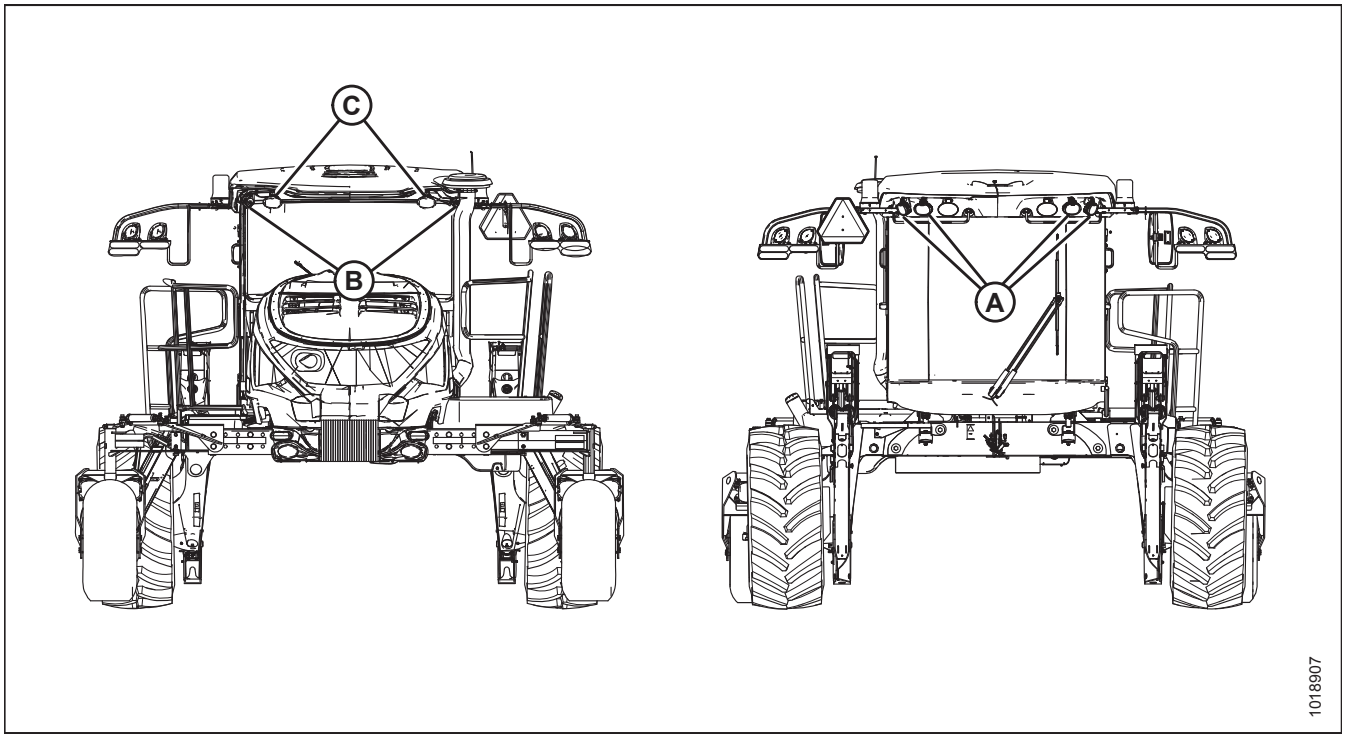

Replacing Bulbs in Red and Amber Lights

To replace bulbs in red and amber lights, follow these steps:

WARNING

To avoid bodily injury or death from unexpected startup of the machine, always stop the engine and remove the key from the ignition before leaving the operator's seat for any reason.

1. Shut down engine and remove key. Turn lights OFF.

   NOTE:

   Hold onto the handholds on the cab front corners and stand on the header anti-slip strips, or stand on the maintenance platform when accessing the red and amber lights.

2. Use left or right platform to access marker lights (A) and (B) attached to mirror arms.

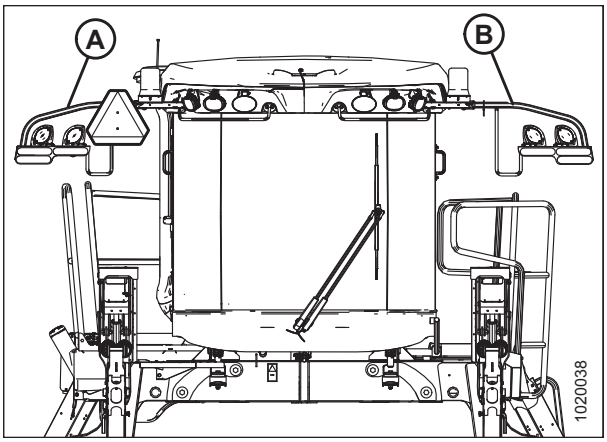

Figure 5.172: Cab-Forward Red and Amber Light Locations

3. Remove two screws (A) from lens and remove lens.
4. Push and twist light bulb to remove from socket.
5. Install a new bulb in the socket, ensuring that bulb base is properly engaged in socket.
   - Use Bulb Trade #1157 for red tail lights
   - Use Bulb Trade #1156 for amber lights
6. Reinstall lens with screws (A).

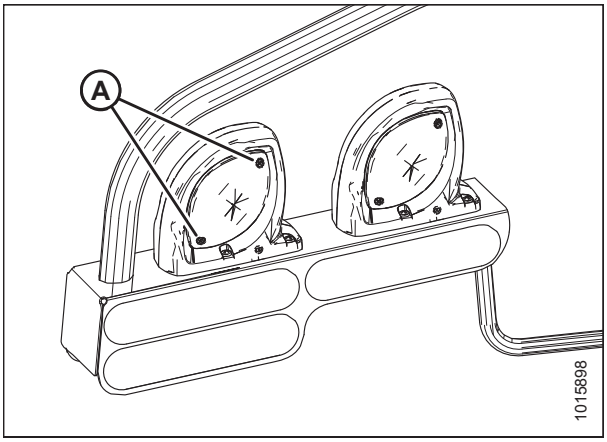

Figure 5.173: Red and Amber Lights

Replacing Red Tail Lights

WARNING

To avoid bodily injury or death from unexpected startup of the machine, always stop the engine and remove the key from the ignition before leaving the operator's seat for any reason.

1. Shut down engine and remove key. Turn lights OFF.
2. Remove two hex flange bolts (A) from light (B), and remove light from bezel.
3. Remove electrical connector from light (B).
4. Connect wiring harness to new light (B), and secure light to bezel using two hex flange bolts (A).

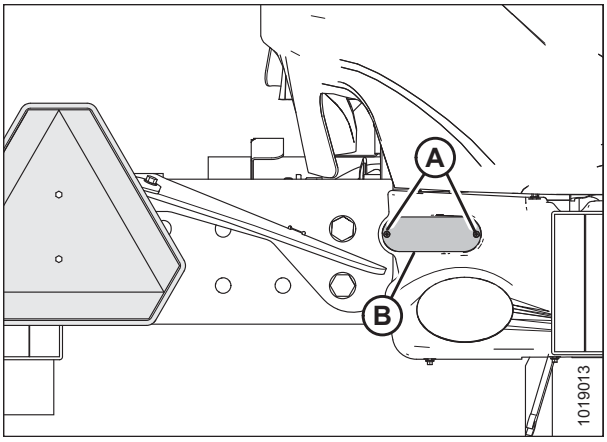

Figure 5.174: Red Tail Lights

Replacing Beacon Lights

1. Disconnect wiring (A) from harness.
2. Remove nuts (B) and remove beacon (C). Discard defective beacon and hardware.
3. Clean residue from support (D) mounting surface.
4. Install new beacon (C) with gasket (E) onto support. Secure with bolts (F), washers (G), and nuts (B).
5. Torque nuts to 0.65 Nm (0.48 lbf·ft).

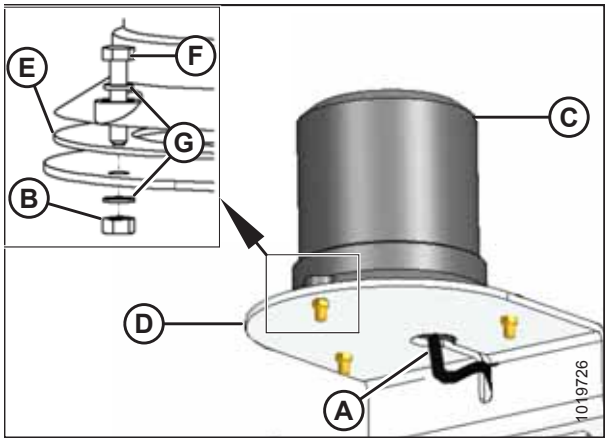

Figure 5.175: Beacon Light Assembly

Replacing the Cabin Dome Bulb

WARNING

To avoid bodily injury or death from unexpected startup of the machine, always stop the engine and remove the key from the ignition before leaving the operator's seat for any reason.

1. Stop the engine and remove the key.
2. Insert a slotted screwdriver (or similar prying tool) into slot (A). Gently pry the lens cover until retaining tabs (B) are free of the dome light bezel.
3. Remove lens cover.

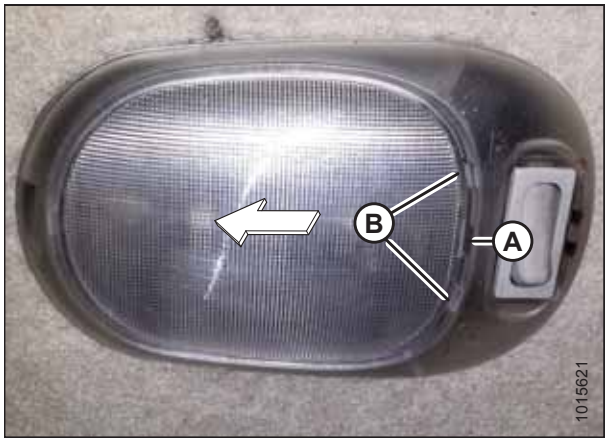

Figure 5.176: Cabin Dome Light

4. Replace bulb (A) (MD #208191).

   IMPORTANT:

   Do **NOT** touch glass with fingers.



Figure 5.177: Cabin Dome Light with Cover Removed

5. Insert single retaining tab (A) into dome light bezel.
6. Insert a slotted screwdriver (or similar prying tool) into slot (B), and gently pry lens cover until retaining tabs (C) engage into dome light bezel.

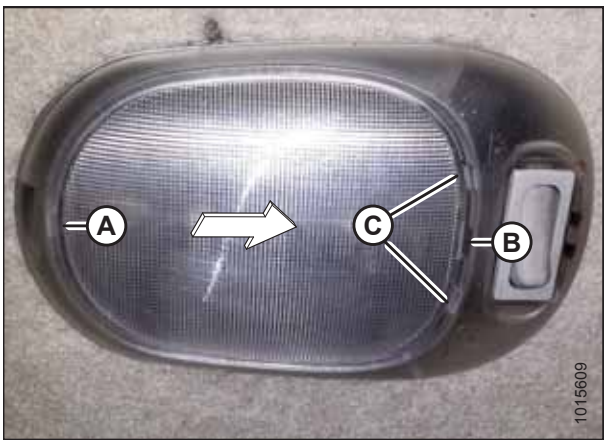

Figure 5.178: Cabin Dome Light

Replacing the Cabin Dome Light Assembly

WARNING

To avoid bodily injury or death from unexpected startup of the machine, always stop the engine and remove the key from the ignition before leaving the operator's seat for any reason.

1. Stop the engine and remove the key.
2. Insert a slotted screwdriver (or similar prying tool) into slot (A). Gently pry the lens cover until retaining tabs (B) are free of the dome light bezel.
3. Remove lens cover.

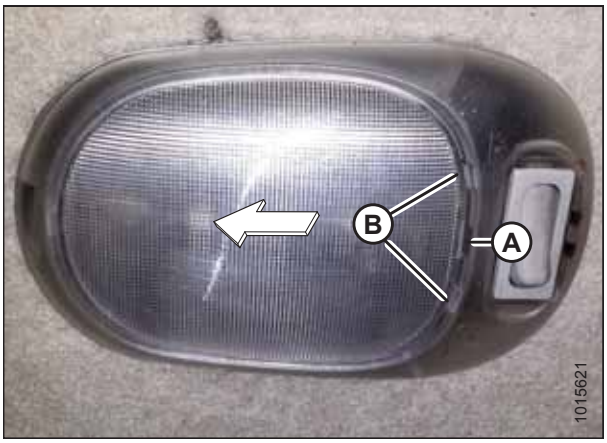

Figure 5.179: Cabin Dome Light

4. Remove two screws (A) from dome light bezel.



Figure 5.180: Cabin Dome Light with Cover Removed

5. Carefully insert a slotted screwdriver (or similar prying tool) between roof liner and dome light assembly on the side of the light with the ON/OFF switch.
6. Gently depress retaining clip (A), and swing dome light assembly downwards to disengage retaining tab (B).
7. Disconnect the old dome light assembly from the wiring harness.
8. Connect the new dome light (MD #201707) to the wiring harness.
9. Engage retaining tab (B), and swing dome light assembly upwards until retaining clip (A) snaps into place and secures assembly.

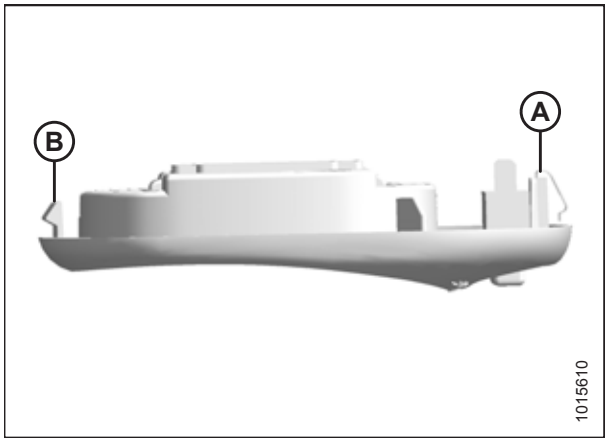

Figure 5.181: Cabin Dome Light Assembly

10. Secure dome light assembly with two screws (A).



Figure 5.182: Cabin Dome Light with Cover Removed

11. Insert single retaining tab (A) into dome light bezel.
12. Insert a slotted screwdriver (or similar prying tool) into slot (B), and gently pry lens cover until retaining tabs (C) engage into dome light bezel.

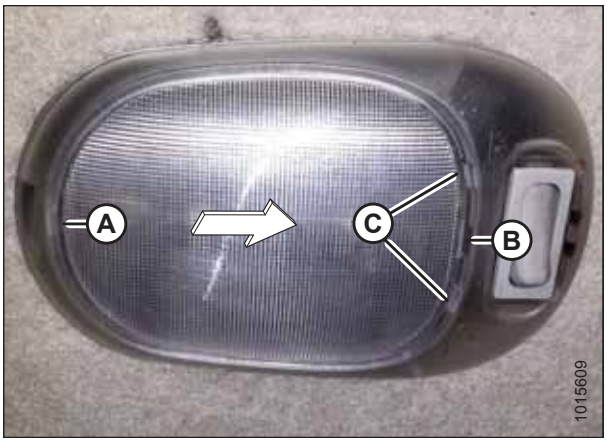

Figure 5.183: Cabin Dome Light

Turn Signal Indicators

If the turn signal indicators on the console do not function, contact your MacDon Dealer.

5.14.7 Accessing Circuit Breakers and Fuses

Most circuit breakers and fuses are located inside a fuse box mounted on the left (cab-forward) side of the frame, behind the platform and inside the battery cover.

NOTE:

The circuit breakers automatically reset. Fuses are the plastic blade type.

WARNING

To avoid bodily injury or death from unexpected startup of the machine, always stop the engine and remove the key from the ignition before leaving the operator's seat for any reason.

1. Stop engine and remove the key from the ignition.
2. Open the battery cover (A) to access the fuse box. For instructions, refer to *Opening Battery Cover, page 333*.

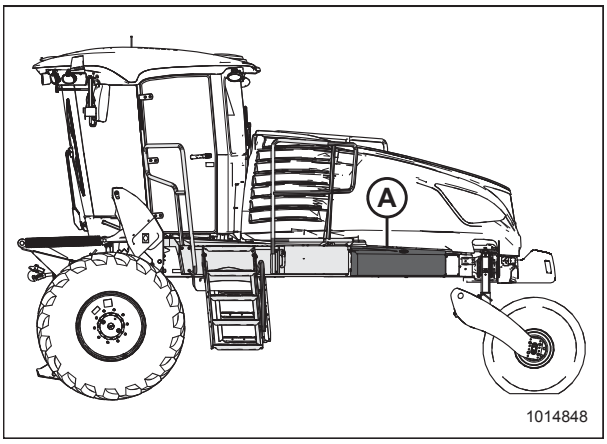

Figure 5.184: Fuse Box Location

3. Lift latch (A) at top of fuse box cover (B) to disengage tab, and then lower cover.
4. Check and replace fuses as required. For instructions, refer to *Checking and Replacing Fuses, page 368*.
5. Position cover (B) onto fuse panel, ensuring that hooks at bottom of cover have engaged fuse panel.
6. Push latch (A) to engage tab at top of fuse box.
7. Close battery cover and move platform to working position. For instructions, refer to *5.4.2 Closing Platform, page 270*.

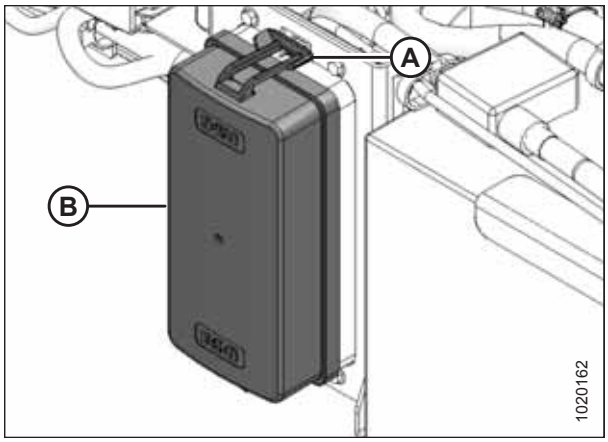

Figure 5.185: Fuse Box Cover

Checking and Replacing Fuses

1. To check fuse, pull fuse (A) out of receptacle and visually examine.
2. To replace fuse, insert new fuse into receptacle.

   IMPORTANT:

   Replacement fuses should match rating on decal shown on *Fuse Panel and Relay Module Decals, page 370*.

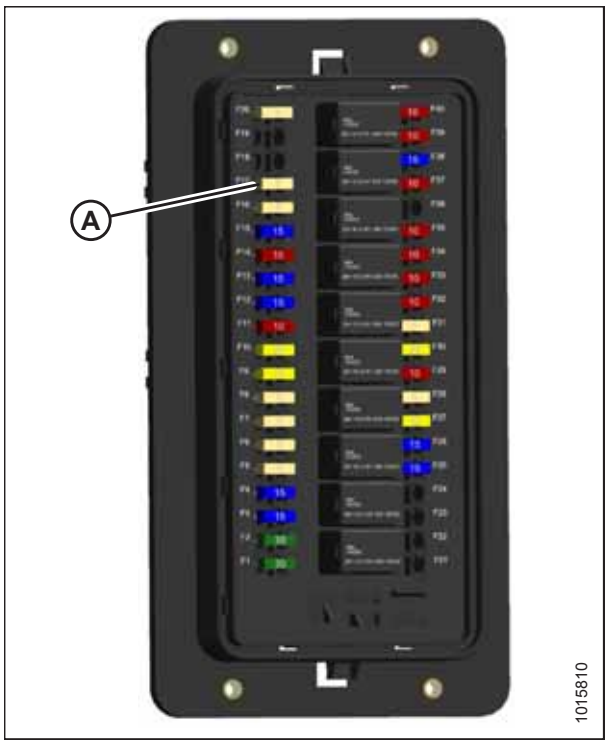

Figure 5.186: Fuses

Replacing Circuit Breakers and Relays

WARNING

To avoid bodily injury or death from unexpected startup of the machine, always stop the engine and remove the key from the ignition before leaving the operator's seat for any reason.

1. Stop the engine and remove the key.
2. Open fuse box cover. For instructions, refer to *5.14.7 Accessing Circuit Breakers and Fuses, page 367*.
3. To replace relay (A), pull relay out of receptacle and install new relay.
4. Reinstall cover.

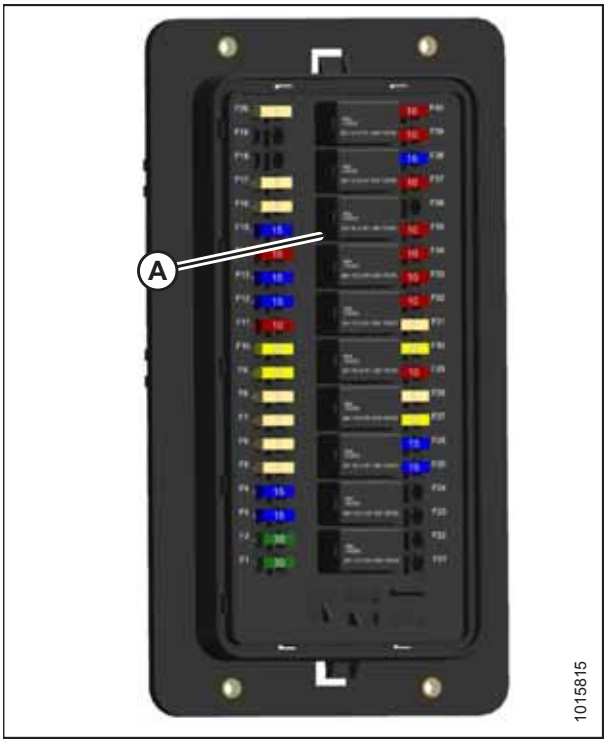

Figure 5.187: Fuse Box – Cover Removed

Fuse Panel and Relay Module Decals

Figure 5.188: Left Rail Fuse Decal Locations

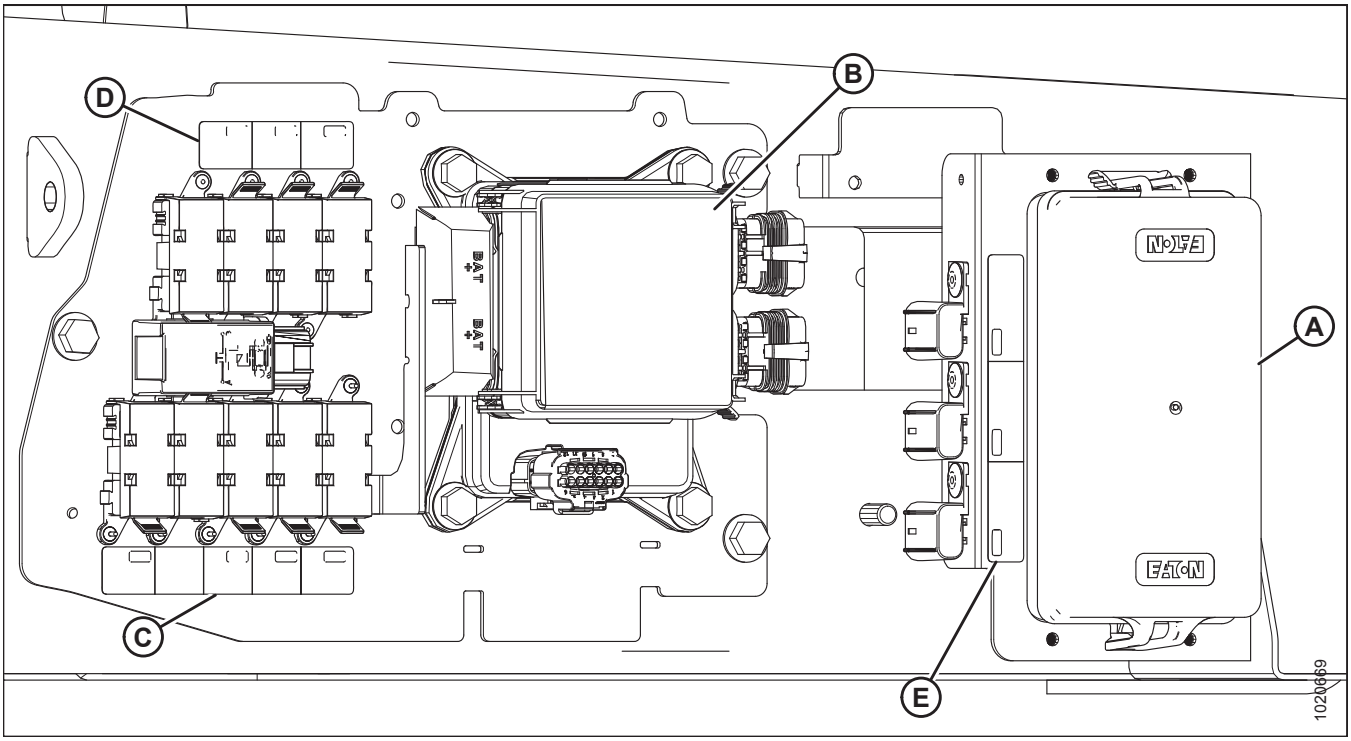

A - Main Fuse Panel Decal (MD #208594) (Located inside Fuse Cover) (Group A)

B - Chassis Relay Module Fuse Decal (MD #207816) (Located inside Fuse Cover) (Group B)

C - Lower AMI Group Fuse Decal (MD #291378) (Group D)

D - Upper AMI Group Fuse Decal (MD #207818) (Group D)

E - ATO Group Fuse Decal (MD #291465) (Group C)

Figure 5.189: Main Fuse Panel Decal (MD #208594) – Group A

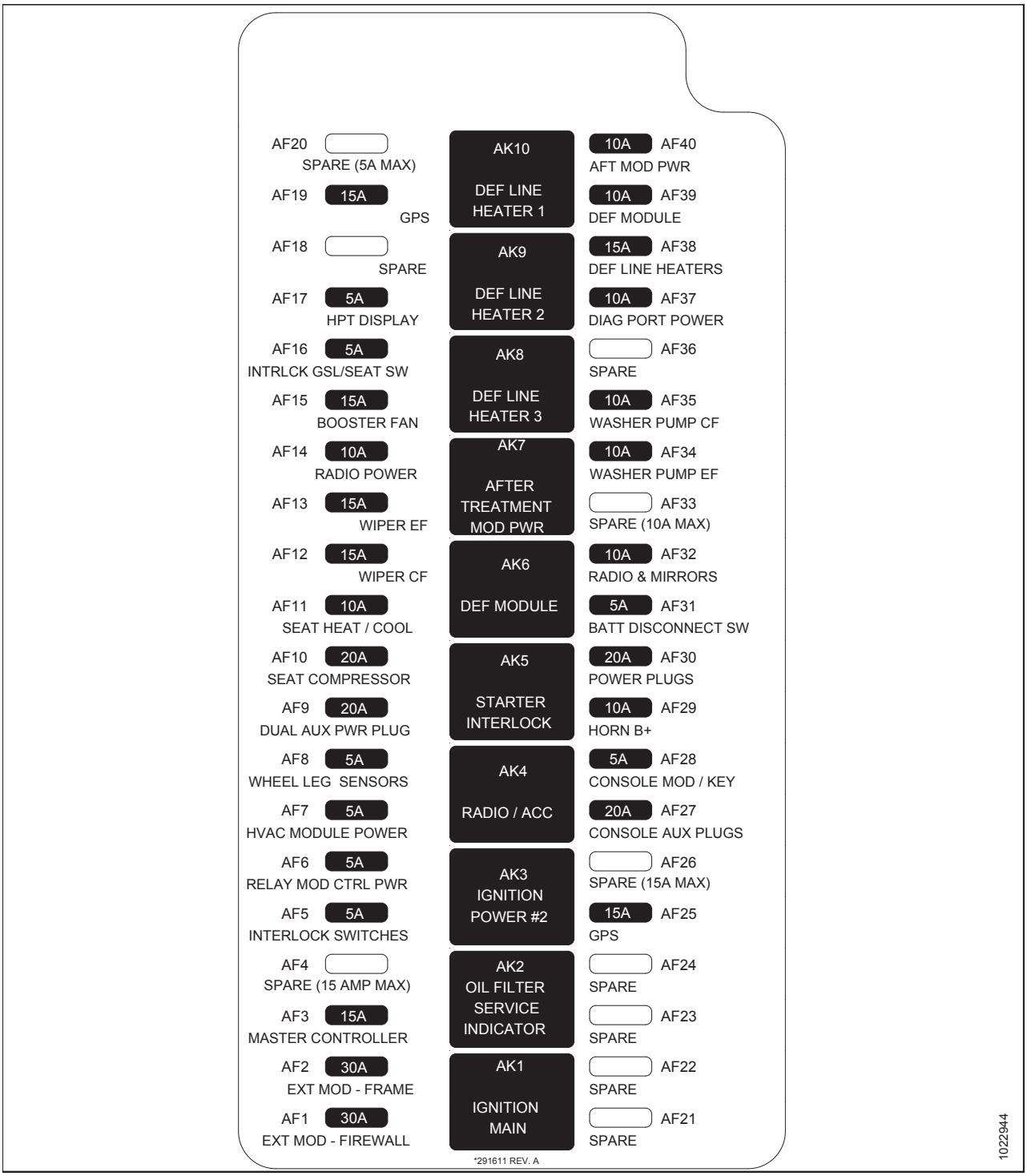

Figure 5.190: Chassis Relay Module Fuse Panel Decal (MD #207816) – Group B

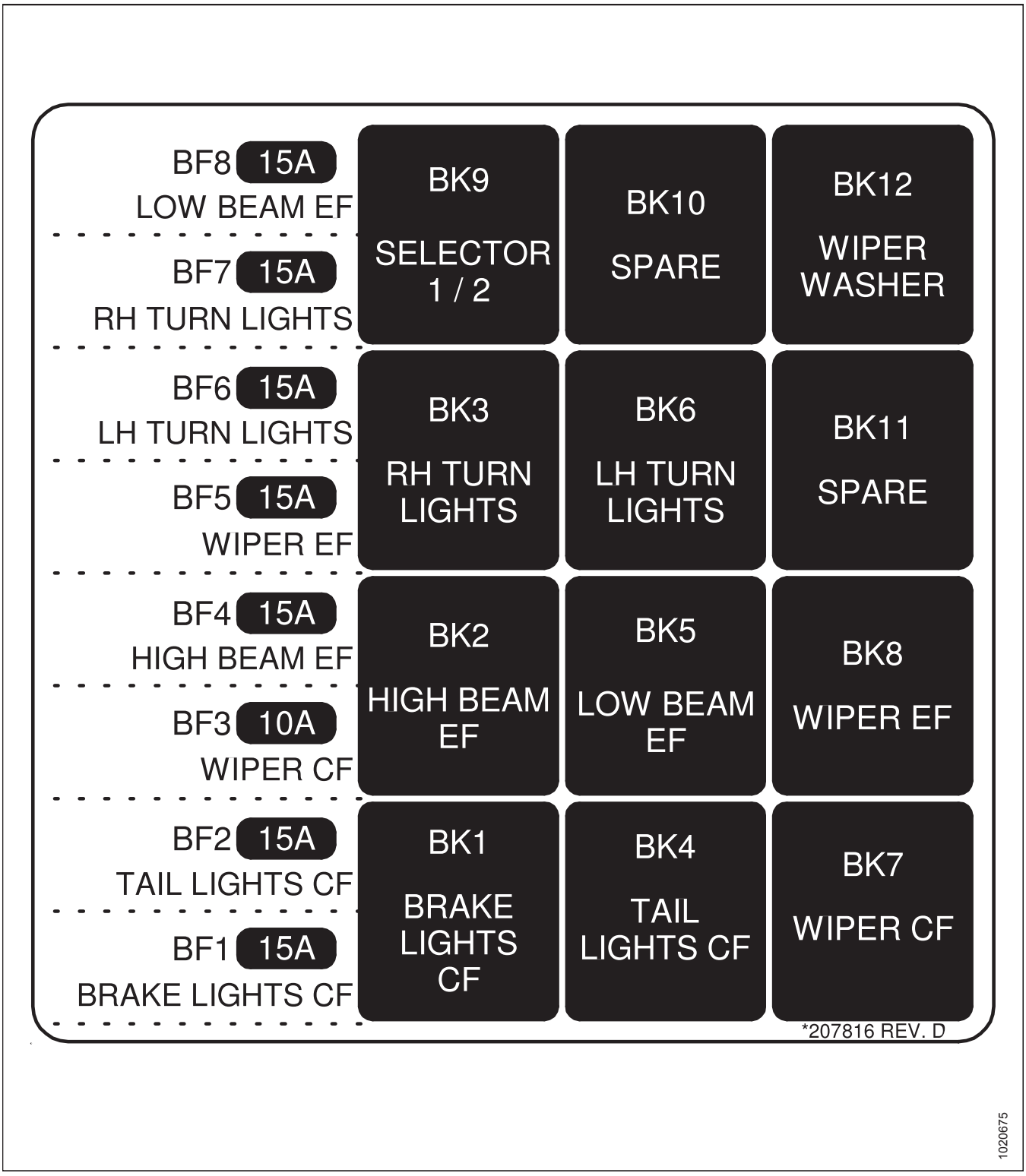

Figure 5.191: ATO (Group C) and AMI (Group D) Fuse Decals

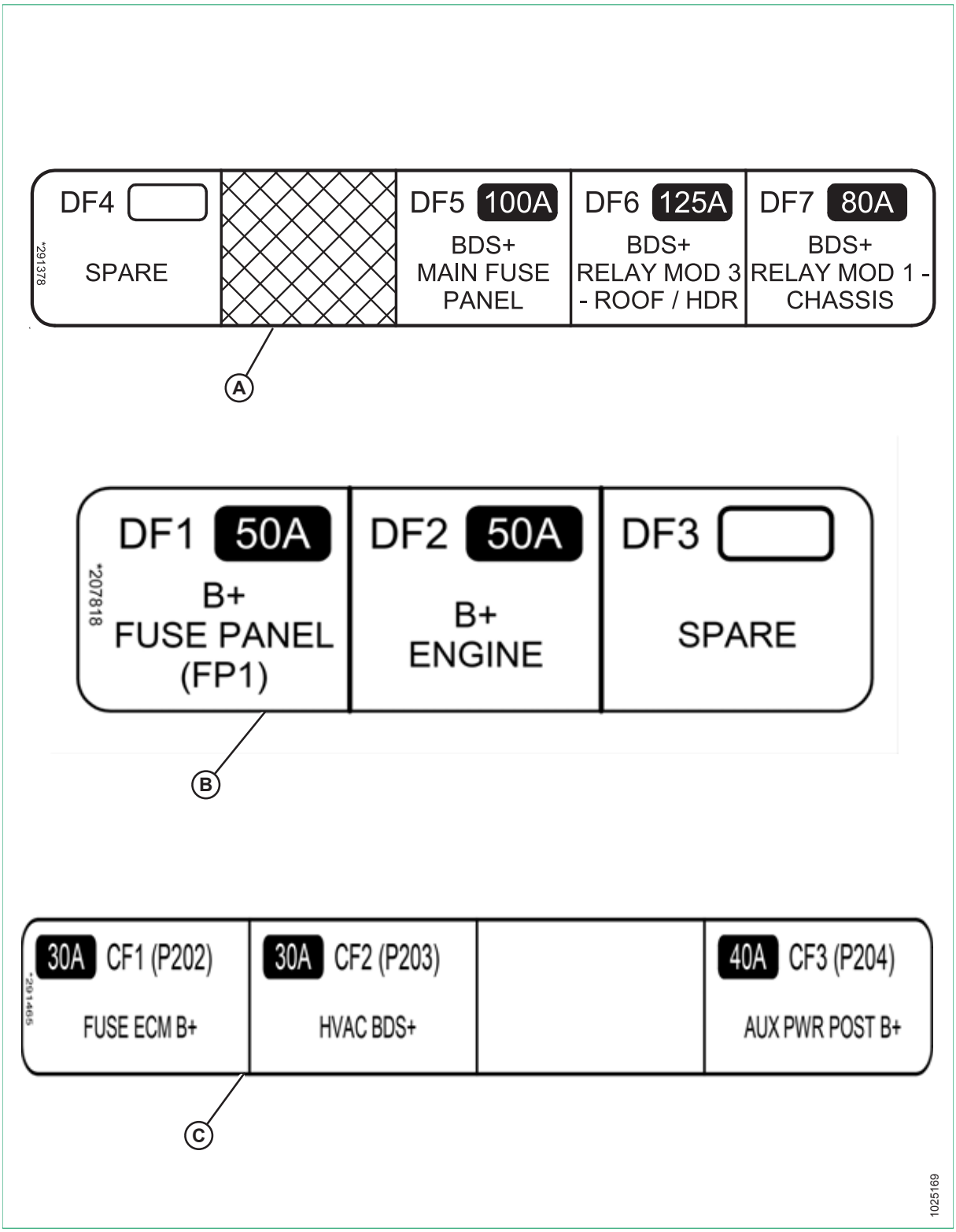

A - Lower AMI Group Fuse Decal (MD #291378) B - Upper AMI Group Fuse Decal (MD #207818) C - ATO Group Fuse Decal (MD #291465)

Figure 5.192: Roof Headliner Fuse Decal (MD #207819) – Group E

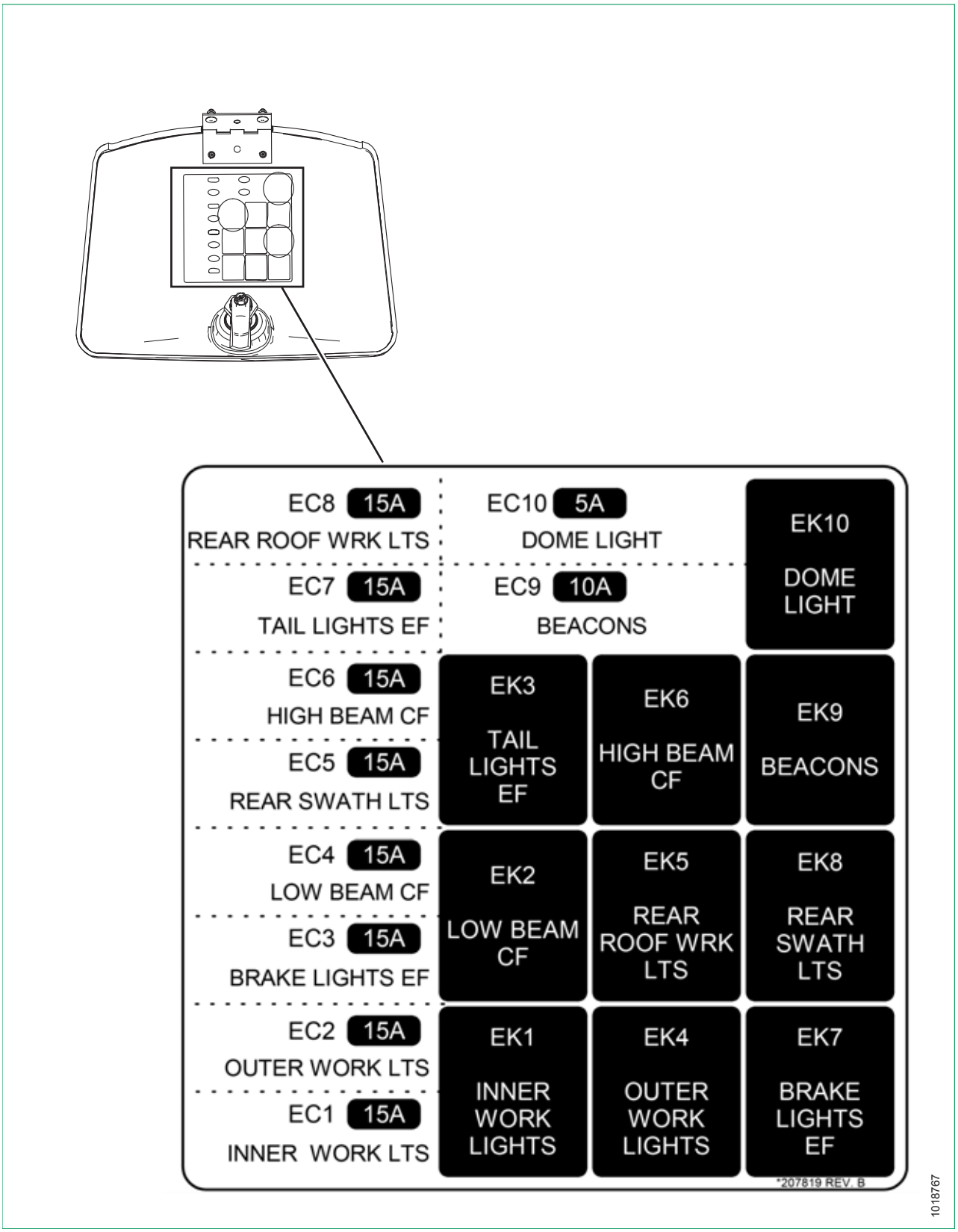

Inspecting and Replacing 125A Main Fuses

The 125A main fuse holders are located on the frame on the left cab-forward side platform beside the battery.

WARNING

To avoid bodily injury or death from unexpected startup of the machine, always stop the engine and remove the key from the ignition before leaving the operator's seat for any reason.

Access the 125A main fuses as follows:

1. Stop the engine and remove the key.
2. Open the left platform. For instructions, refer to *5.4.1 Opening Platform, page 270*.
3. Remove negative battery terminal.
4. Locate the five main fuses (A) secured to the left cab-forward front frame.

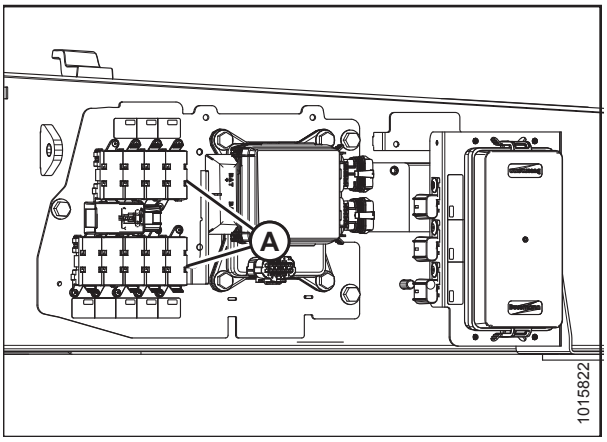

Figure 5.193: Main Fuses

5. To check condition of the fuse, pull tab (A) and open cover (B).

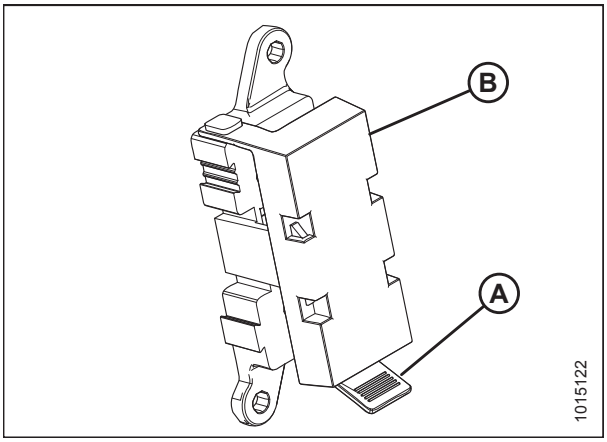

Figure 5.194: 125A Main Fuse

6. Examine fuse (A) for indications of melting.
7. To remove fuse (A), remove two nuts (B) and pull the fuse free from holder (existing wiring may need to be pulled off the stud first).
8. Install the new fuse on studs and install any existing wiring that was removed.
9. Secure with nuts (B).

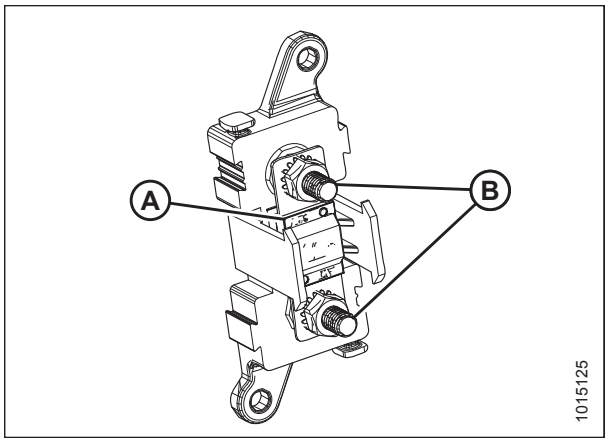

Figure 5.195: 125A Main Fuse

10. Close cover (B) and secure with tab (A).
11. Return platform to operating position. For instructions, refer to *5.4.2 Closing Platform, page 270*.

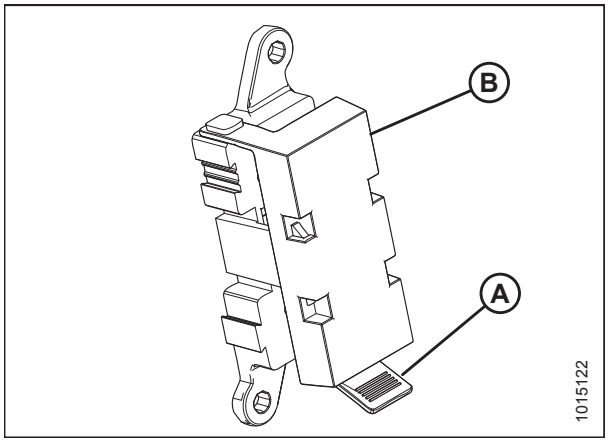

Figure 5.196: 125A Main Fuse

5.14.8 Drive Wheels

Raising Drive Wheel

This procedure applies to both drive wheels.

WARNING

To avoid bodily injury or death from unexpected startup of the machine, always stop the engine and remove the key from the ignition before leaving the operator's seat for any reason.

CAUTION

Header MUST be removed and NO weight box installed. Use a hydraulic jack with minimum lifting capacity of 2268 kg (5000 lb.) to provide adequate support for the machine.

1. Disconnect the header.
2. Park windrower on level ground. Block all wheels.

3. Place the ground speed lever (GSL) (A) in PARK.
4. Stop the engine, and remove the key.

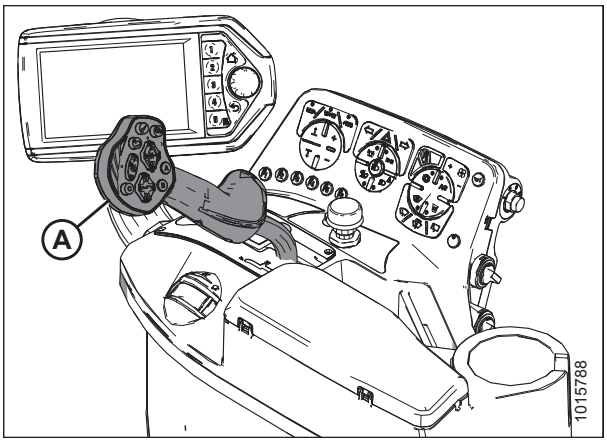

Figure 5.197: Ground Speed Lever

5. Place a jack under the leg jack point (A). Raise the drive wheel until it is slightly off the ground.
6. Place a jack stand beneath the lift cylinder mount (B).

   NOTE:

   Do **NOT** place jack stand under the cylinder. Use a small metal plate on top of the jack stand.
7. Lower the windrower onto the jack stand.

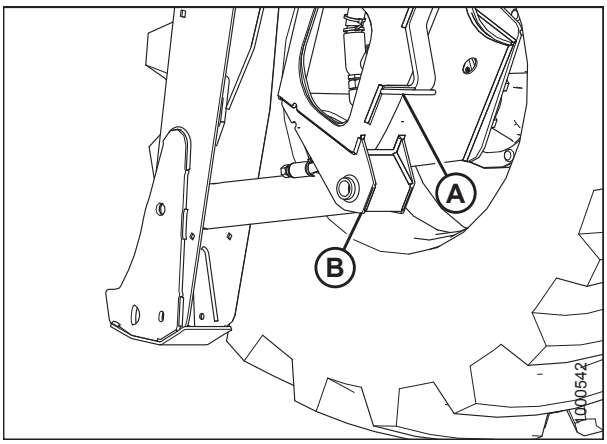

Figure 5.198: Drive Wheel Jack Point

Removing Drive Wheels

CAUTION

Use a suitable lifting device capable of supporting a minimum of 907 kg (2000 lb.) to lift the wheel assembly away from the windrower.

1. Raise the windrower drive wheel (A) off the ground. For instructions, refer to *Raising Drive Wheel, page 376*.
2. Remove the wheel nuts (B).
3. Remove the drive wheel (A).

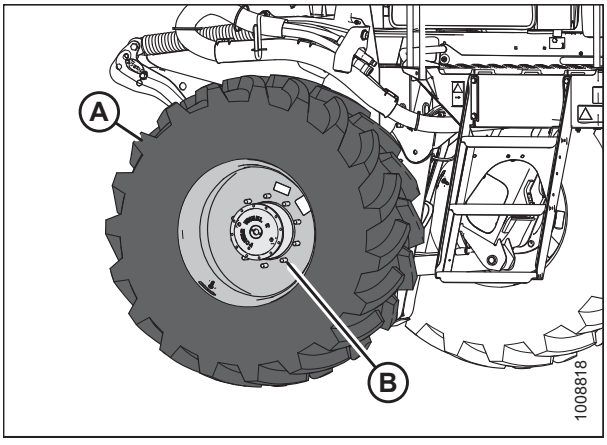

Figure 5.199: Drive Wheel Assembly

Installing Drive Wheels

CAUTION

Use a lifting device capable of supporting a minimum of 907 kg (2000 lb.) to lift the wheel assembly.

IMPORTANT:

Windrower must be supported off the ground with stands. For instructions, refer to *Raising Drive Wheel, page 376*.

1. Using a forklift, lift cab-end of windrower to approximately 130 cm (51 in.) (B) off the ground, enough to position the drive wheel assembly (A). Place a stand (C) under windrower frame.
2. Clean mounting surface on wheel drive and rim.

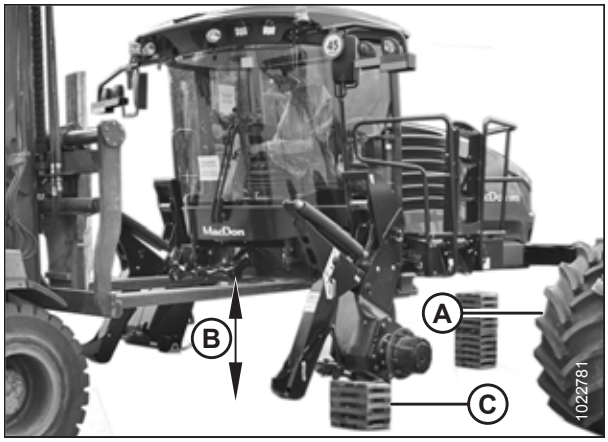

Figure 5.200: Supporting Windrower

3. Position a suitable lifting device (A) under tire and raise slightly.
4. Position wheel against wheel drive hub so air valve (B) is on the outside and tread (C) points forward (cab-forward orientation).

   NOTE:

   For turf tires (diamond tread pattern), be sure arrow on sidewall points in forward rotation (cab-forward).

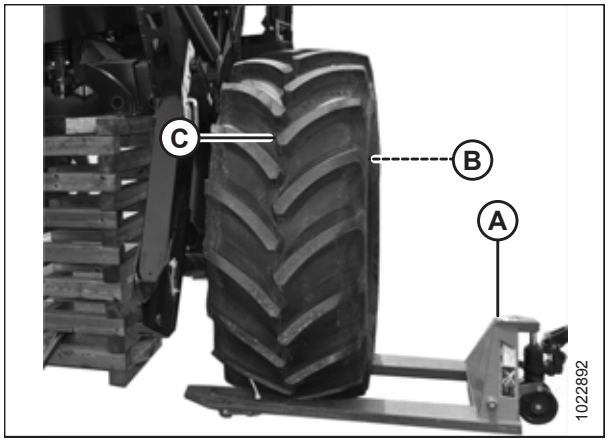

Figure 5.201: Drive Wheel

5. Align rim with studs on hub and push wheel onto hub.
6. Install wheel nuts (A).

   IMPORTANT:

   To avoid damage to wheel rims and studs, do **NOT** use an impact wrench. Threads must be clean and dry. Do **NOT** apply lubricant or anti-seize compound. Do **NOT** overtighten wheel nuts.

7. Torque drive wheel nuts. For instructions, refer to *5.5.1 Tightening Drive Wheel Nuts, page 273*.
8. Repeat tightening sequence two additional times, ensuring the specified torque is achieved each time.

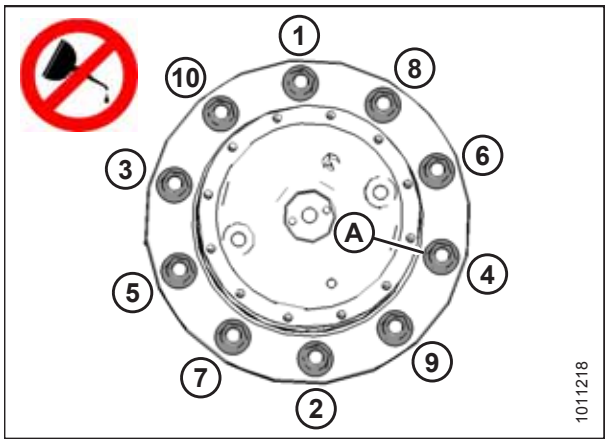

Figure 5.202: Tightening Sequence

9. Repeat Steps *2, page 378* to *8, page 378* for the other drive wheel.
10. Raise windrower, remove stand, and lower windrower to ground.
11. Lower the windrower. Remove the jack. For instructions, refer to *Lowering Drive Wheel, page 379*.
12. Repeat torque procedure every hour of operation until two consecutive checks confirm that there is no movement of the nuts.

Lowering Drive Wheel

CAUTION

Jack stand must be capable of supporting a minimum of 2268 kg (5000 lb.).

1. Place a jack under the leg jack point (A), and raise the drive wheel slightly off the jack stand.
2. Remove the jack stand from under the cylinder lift mount (B). Lower the drive wheel to the ground.
3. Remove the jack.

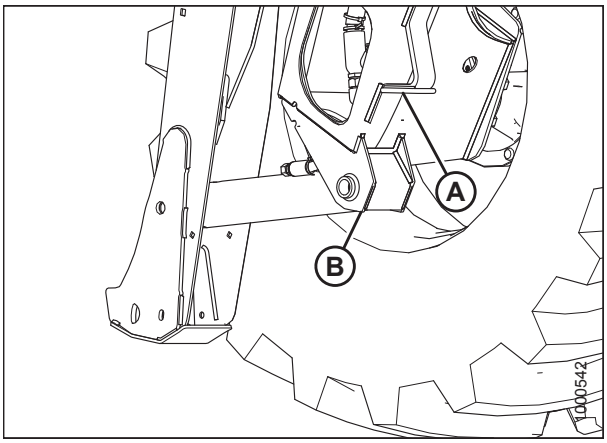

Figure 5.203: Drive Wheel Leg Jacking Point

5.14.9 Caster Wheels

Adjusting Caster Tread Width

The rear casters can be adjusted to a narrow tread width, which allows loading and shipping without having to remove them.

A narrow tread width is better suited for smaller headers because it allows more space to the uncut crop, and provides more maneuverability around poles, irrigation inlets, and other obstacles.

A wider tread width reduces runover in heavy crops that produce large windrows.

WARNING

To avoid bodily injury or death from unexpected startup of the machine, always stop the engine and remove the key from the ignition before leaving the operator's seat for any reason.

CAUTION

Park on a flat, level surface with the header on the ground, the ground speed lever in PARK position, and the steering wheel in locked position (centered). Wait for the HPT to beep and display a red P symbol to confirm the park brakes have engaged.

1. Park windrower on level ground, and block the drive wheels.
2. Place the ground speed lever (GSL) in PARK.
3. Stop the engine and remove the key.

4. Using a jack (or another lifting device) under the frame at location (A), slightly raise the rear of the windrower until most of the weight is off the casters.

   IMPORTANT:

   Do **NOT** damage the engine oil pan when raising the windrower.

   NOTE:

   Lifting device must have a lifting capacity of at least 4536 kg (10,000 lb.).

5. Remove six bolts (B) (four on backside, two on underside) and washers from the left and right sides of the walking beam.

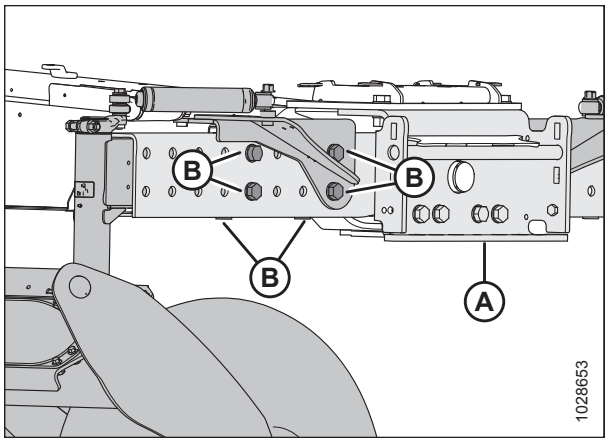

Figure 5.204: Left Caster Wheel Extension

6. Slide the left and right extensions equal distances in either the inboard or outboard directions, and align its holes at the desired locations.

   NOTE:

   To assist moving the extensions, rotate the caster so the wheel is parallel to the walking beam.

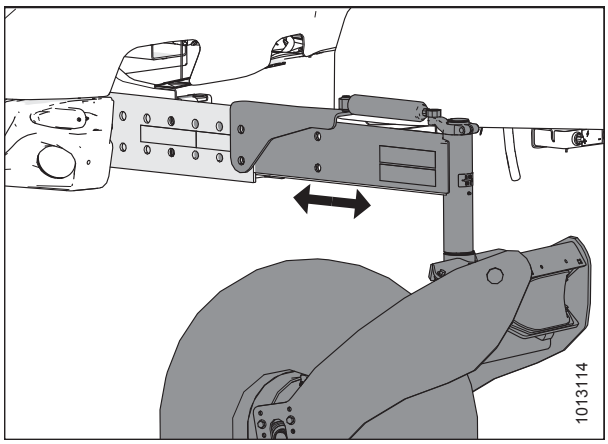

Figure 5.205: Right Caster Wheel Extension

IMPORTANT:

Ensure the caster wheels are positioned at equal distances from the center of the windrower.

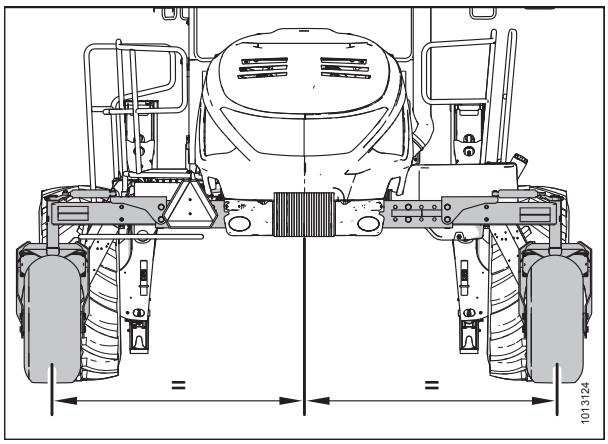

Figure 5.206: Adjustable Caster Wheels

7. Position bracket (A) and install back bolts (C).
8. Install bottom bolts (B).
9. Tighten bolts as follows:
   a. Snug bottom bolts (B), then snug back bolts (C).
   b. Tighten and torque back bolts (C) to 746–770 Nm (550–570 bf·ft).
   c. Tighten and torque bottom bolts (B) to 746–770 Nm (550–570 lbf·ft).
10. Lower the windrower to the ground.

IMPORTANT:

Torque bolts after first five and 10 hours of operation.

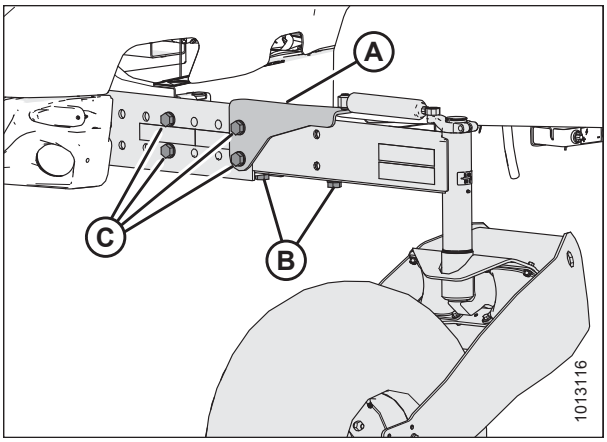

Figure 5.207: Caster Wheel Extensions

Installing Forked Caster Wheel

1. Position axle assembly (B) into wheel (C) and secure with wheel nuts (A).

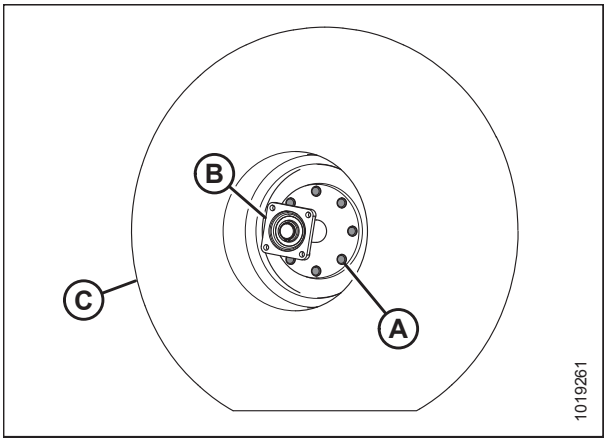

Figure 5.208: Caster Wheel Assembly

2. Tighten wheel nuts (A) to 163 Nm (120 lbf·ft) using the tightening sequence shown at right. Repeat the tightening sequence three times.

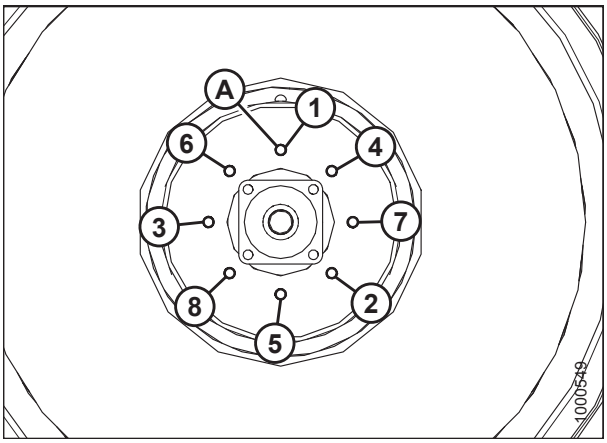

Figure 5.209: Caster Wheel Tightening Sequence

3. Position wheel assembly (D) in forked caster (C).
4. Install eight bolts (A) and nuts (four on each side of caster) to secure axle (B) to caster (C). Torque nuts to 97–107 Nm (75–79 lbf·ft).
5. Lower caster wheel. For instructions, refer to *Lowering Caster Wheel, page 383*.

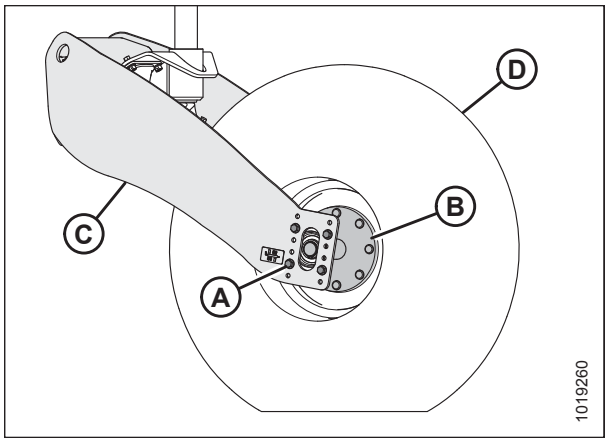

Figure 5.210: Caster Wheel Assembly

Removing Forked Caster Wheel

CAUTION

Wheel assemblies are heavy. Support wheel assembly before removing axle bolts.

1. Raise caster wheel. For instructions, refer to *Raising Caster Wheel, page 383*.
2. Remove the eight bolts (A) and nuts (four of each on each side of caster) attaching axle (B) to forked caster (C), and remove wheel assembly (D) from caster (C).

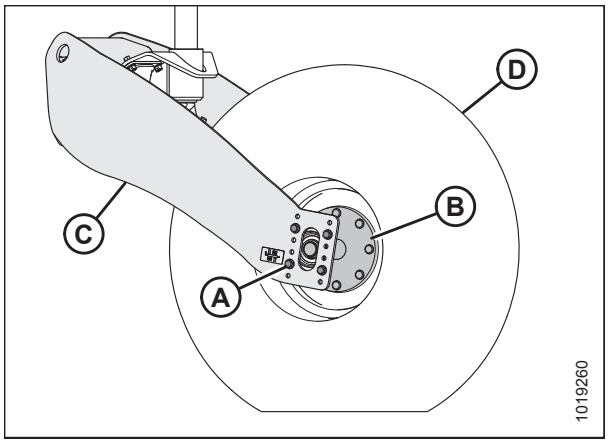

Figure 5.211: Caster Wheel Assembly

3. Remove the eight wheel nuts (A) that secure the axle (B) to the wheel (C).
4. Separate axle (B) and wheel (C).

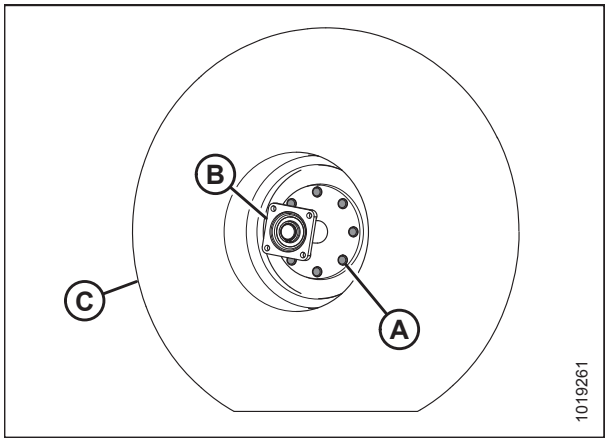

Figure 5.212: Caster Wheel Assembly

Lowering Caster Wheel

1. Raise the end of walking beam (A) slightly, using a suitable lifting device capable of lifting minimum 2268 kg (5000 lb.).
2. Remove the jack stand, and lower the end of the walking beam until the caster wheel assembly (B) is on the ground.
3. Remove blocks from the drive tires.

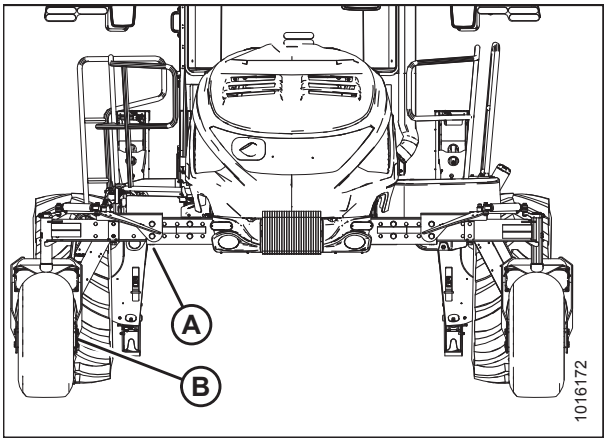

Figure 5.213: Caster Wheel Assembly

Raising Caster Wheel

This procedure is for raising the caster wheel. This procedure applies to both caster wheels.

1. Park windrower on level ground, and block the drive wheels.
2. Place the ground speed lever (GSL) (A) in PARK.
3. Stop the engine and remove the key.

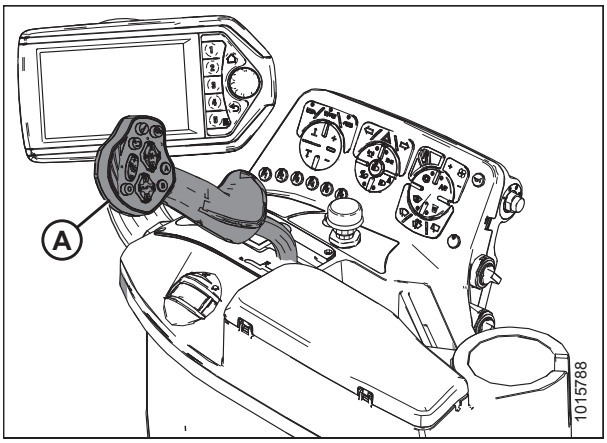

Figure 5.214: GSL Position

4. Raise the end of walking beam (A) until the caster wheel assembly (B) is slightly off the ground. Use a suitable lifting device, capable of lifting 2268 kg (5000 lb.) minimum.
5. Place a jack stand beneath the walking beam and lower the beam until resting on the stand.

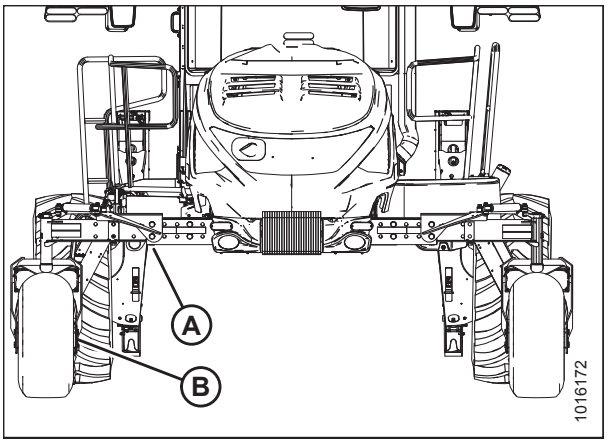

Figure 5.215: Caster Wheel Assembly

Chapter 6: Options and Attachments

6.1 Cab

6.1.1 Automated Steering Systems

A MacDon-approved automated steering system is available from MacDon Dealers that provide Trimble® global positioning system (GPS) installation and support services.

MacDon windrowers are partially pre-wired for either the Trimble® AutoPilot™ hydraulically integrated steering system or the Trimble® EZ-Pilot® wheel/column-based assisted steering system. The windrower's ground speed lever (GSL) has an automated steering (autosteer) engage switch.

The Trimble® EZ-Pilot® system for model year 2019 machines requires the MacDon EZ-Pilot® Ready kit (MD #B6602). Installation instruction (MD #214623) is included in the bundle.

The Trimble® AutoPilot™ system for model year 2019 machines requires the MacDon Trimble® Autopilot™ Ready kit (MD #B6601). Installation instruction (MD #214624) is included in the bundle.

Other GPS providers may supply parts in their vehicle-specific installation packages or make installation kits available through MacDon Dealers.

6.1.2 High Performance Lighting – Standard on Deluxe Cab Package

The standard windrower cab has four halogen field lights on the front, as well as two halogen stubble lights and two halogen work lights on the back. The Lighting Upgrade kit (MD #B6051) contains eight LED flood lights to replace all of these lights. Machines with the deluxe cab already have 360° Night Vision LED Lighting installed.

MD #B6051

Installation instructions are included in the bundle.

NOTE:

This bundle is included in the deluxe cab package.

6.2 Header Operation

6.2.1 Conversion Kit for Disc Ready to Disc, Auger, and Draper Ready

Used to convert a M1240 from Disc Ready to Disc, Draper, and Auger ready.

MD #B5999

Instruction MD #147822 is included in the bundle.

6.2.2 Booster Spring Kit – External

This kit is available for headers over 2812 kg (6200 lb.) to increase the float capacity.

MD #B6047 – Booster Spring kit (external) includes two springs (one for each side) and mounting brackets. Kit instruction MD #147825 is included in the bundle.

There is also a Double Booster Spring kit (MD #B6106) that is used together with the Booster Spring kit (external) to add on a second booster spring. Refer to *6.2.3 Double Booster Spring Kit – External, page 387*.

Table 6.1 Available Float Spring Kits for Different Header Types and Configurations

Header Type	Description	Header Configuration	Additional Float Spring Kits
D130XL	9.1 m (30 ft.) single reel, double knife, timed	Transport	—
D130XL	9.1 m (30 ft.) single reel, double knife, timed	Transport Upper Cross Auger Vertical Knives	MD #B6047
D135XL	10.8 m (35 ft.) single reel, double knife, untimed	Base	—
D135XL	10.8 m (35 ft.) single reel, double knife, untimed	Transport	MD #B6047
D135XL	10.8 m (35 ft.) single reel, double knife, untimed	Transport Upper Cross Auger Vertical Knives	MD #B6047
D135XL	10.8 m (35 ft.) double reel, double knife, untimed	Base	—
D135XL	10.8 m (35 ft.) double reel, double knife, untimed	Transport	MD #B6047
D135XL	10.8 m (35 ft.) double reel, double knife, untimed	Transport Upper Cross Auger Vertical Knives	MD #B6047
D140XL	12.2 m (40 ft.) double reel, double knife, untimed	Base	—

Table 6.1 Available Float Spring Kits for Different Header Types and Configurations (continued)

Header Type	Description	Header Configuration	Additional Float Spring Kits
D140XL	12.2 m (40 ft.) double reel, double knife, untimed	Transport	MD #B6047
D140XL	12.2 m (40 ft.) double reel, double knife, untimed	Transport Upper Cross Auger Vertical Knives	MD #B6047
D145XL	12.2 m (40 ft.) double reel, double knife, untimed	Base	MD #B6047
D145XL	12.2 m (40 ft.) double reel, double knife, untimed	Transport	MD #B6047

6.2.3 Double Booster Spring Kit – External

Available for headers over 2812 kg (6200 lb.) to increase the float capacity.

The Double Booster Spring kit (MD #B6106) is used together with the Booster Spring kit (MD # B6047) to add a second booster spring. Refer to *6.2.2 Booster Spring Kit – External, page 386*. Kit instruction MD #147826 is included in the bundle.

Table 6.2 Available Float Spring Kits for Different Header Types and Configurations

Header Type	Description	Header Configuration	Additional Float Spring Kits
D145XL	13.7 m (45 ft.) double reel, double knife, untimed	Transport Upper Cross Auger Vertical Knives	MD #B6106

6.2.4 Double Windrow Attachment

This kit allows auger and rotary headers to lay a double windrow when installed on a windrower. The kit includes a draper deck, linkage assembly, hydraulics, and installation instructions.

MD #C2006 consists of:

- MD #B5973 Deck
- MD #B5974 Mounting frame and hydraulic/electrical connections
- Double Windrow Attachment (DWA) manual

6.2.5 Double Windrow Attachment Shutoff Kit

For M1240 owners with a Double Windrow Attachment (DWA) who have both R85 Rotary Disc and D1 Series Draper Headers, or for M1170 owners with a DWA who have both A40DX Auger and D1 Series Draper Headers, this kit allows Operators to stop the DWA draper when running a D1 Series Draper Header.

MD #299704

Instructions are included in the kit.

6.2.6 Center-Link Lifter

This kit allows the center-link cylinder to be hydraulically positioned and connected to the header without leaving the operator's station.

MD #B6028

Instruction MD #147811 included in the bundle.

6.2.7 Swath Compressor

The MacDon Swath Compressor is a large, formed polyethylene sheet which is designed to mount to the underside of a MacDon M1 Series Windrower. The MacDon Swath Compressor is designed for use with D1XL and D1X Series Draper Headers cutting canola.

When lowered, the swath compressor helps prevent wind damage by shaping the windrow and anchoring it into the stubble behind the header using a smooth, gradual transition that helps prevent shelling in ripe conditions.

The swath compressor height can be adjusted and monitored with the Harvest Performance Tracker (HPT) display. Height can be adjusted for crop ripeness, yield, and the amount of compression required. The swath compressor will automatically lift up if the Operator stops or reverses the windrower.

Preferred height can be saved under a One-Touch-Return preset.

MD #B6441

Instructions are included with the kit.

6.3 Transport

6.3.1 Ballast

Ballast kits are for draper headers only. For operation on steep hills, additional ballast sets (beyond the recommendation in the table) may be installed.

Initial rear ballast package (MD #B6053): 1 unit (163 kg [360 lb.])

Additional rear ballast package (MD #B6054): 2 units (163 kg [360 lb.] each)

Installation instructions are included.

Table 6.3 Ballast

Header Type	Description	Installed Options	Base Kit	Additional Kits	Additional Float Springs
D125X	25 foot, single reel, double knife, timed	–	0	0	0
D130XL	30 foot, single reel, double knife, timed	Transport	1	0	0
D130XL	30 foot, single reel, double knife, timed	Transport + upper cross auger + vertical knives	1	0	MD #B6047
D135XL	35 foot, single reel, double knife, untimed	Base	1	1	0
D135XL	35 foot, single reel, double knife, untimed	Transport	1	1	MD #B6047
D135XL	35 foot, single reel, double knife, untimed	Transport + upper cross auger + vertical knives	1	2	MD #B6047
D135XL	35 foot, double reel, double knife, untimed	Base	1	1	0
D135XL	35 foot, double reel, double knife, untimed	Transport	1	1	MD #B6047
D135XL	35 foot, double reel, double knife, untimed	Transport + upper cross auger + vertical knives	1	2	MD #B6047
D140XL	40 foot, double reel, double knife, untimed	Base	1	1	0
D140XL	40 foot, double reel, double knife, untimed	Transport	1	1	MD #B6047
D140XL	40 foot, double reel, double knife, untimed	Transport + upper cross auger + vertical knives	1	2	MD #B6047
D145XL	45 foot, double reel, double knife, untimed	Base	1	1	MD #B6047
D145XL	45 foot, double reel, double knife, untimed	Transport	1	2	MD #B6047
D145XL	45 foot, double reel, double knife, untimed	Transport + upper cross auger + vertical knives	1	2	MD #B6106

6.3.2 Single Side Mud Caster Wheels

Single-sided mud caster wheels on an unsuspended assembly are designed to minimize wheel clogging in very heavy mud conditions.

MD #B6017

Instruction MD #214616 is included with the bundle.

6.3.3 Towing Harness

The towing harness is used together with the weight box (refer to *6.3.4 Weight Box, page 390*) when towing a D1XL or D1X Series Draper Header equipped with slow speed transport option behind the windrower.

MD #B6048 – Weight box harness only. Includes hitch pin and wiring for use with slow speed header transport option.

Instruction MD #147868 is included in the bundle.

6.3.4 Weight Box

A weight box installed onto the windrower header lift system is required to transport a header behind the windrower.

MD #B5238 – Weight box without harness

A towing harness is required to use the weight box. Refer to *6.3.3 Towing Harness, page 390* for more information.

Chapter 7: Troubleshooting

7.1 Engine Troubleshooting

Problem	Solution	Section
Symptom: Engine won't crank.		
Controls not in NEUTRAL	Move ground speed lever (GSL) to NEUTRAL.	*Starting the Engine, page 115*
Controls not in NEUTRAL	Move steering wheel to locked (centered) position.	*Starting the Engine, page 115*
Controls not in NEUTRAL	Disengage HEADER ENGAGE switch.	*3.2.1 Header Drive, page 41*
Symptom: Engine hard to start or will not start.		
NEUTRAL interlock misadjusted	Contact Dealer.	Contact Dealer
No fuel to engine	Fill empty fuel tank. Replace clogged filter.	*5.6.7 Filling Fuel Tank, page 289* and *5.10.1 Maintaining Fuel Filters, page 316*
Old fuel in tank	Drain tank. Refill with fresh fuel.	*5.14.2 Draining Fuel Tank, page 349*
Water, dirt, or air in fuel system	Drain, flush, fill, and prime system.	*Priming Fuel System, page 318*
Improper type of fuel	Use proper fuel for operating conditions.	*5.1.2 Fuel Specifications, page 261*
Crankcase oil too heavy	Use recommended oil.	*5.1.3 Lubricants, Fluids, and System Capacities, page 262*
Low battery output	Have battery tested. Check battery electrolyte level.	*5.13.1 Batteries, page 333*
Poor battery connection	Clean and tighten loose connections.	*5.13.1 Batteries, page 333*
Faulty starter	Contact Dealer.	Contact Dealer
Loose electrical connection at fuel pump	Ensure connector at pump is fully pushed in.	Contact Dealer
Wiring shorted, circuit breaker open	Check continuity of wiring and breaker (manual reset).	*Checking and Replacing Fuses, page 368*
ECM fuse (1 of 2) blown	Replace.	*Checking and Replacing Fuses, page 368*
ECM Ignition relay faulty	Replace.	*Checking and Replacing Fuses, page 368*
Faulty injectors	Contact Dealer.	Contact Dealer
Symptom: Engine knocks.		
Engine out of time	Contact Dealer.	Contact Dealer
Insufficient oil	Add oil.	*Adding Engine Oil, page 306*
Low or high coolant temperature	Contact Dealer.	Contact Dealer
Improper fuel	Use proper fuel.	*5.1.2 Fuel Specifications, page 261*

Problem	Solution	Section
Symptom: Low oil pressure.		
Low oil level	Add oil.	*Adding Engine Oil, page 306*
Improper type of oil	Drain and fill crankcase with proper oil.	*5.1.3 Lubricants, Fluids, and System Capacities, page 262*
Worn components	Contact Dealer.	Contact Dealer
Symptom: High oil consumption.		
Internal parts worn	Contact Dealer.	Contact Dealer
Crankcase oil too light	Use recommended oil.	*5.1.3 Lubricants, Fluids, and System Capacities, page 262*
Oil leaks	Check for leaks around gaskets, seals, and drain plugs.	*5.6.1 Checking Engine Oil Level, page 282*
Symptom: Engine runs irregularly or frequently stalls.		
Unsteady fuel supply	Change filter on fuel tank vent line. Replace clogged fuel filter.	*5.11.1 Removing and Installing the Fuel Tank Vent Filter, page 322* and *5.10.1 Maintaining Fuel Filters, page 316*
Water or dirt in fuel system	Drain, flush, and fill fuel system.	*5.1.3 Lubricants, Fluids, and System Capacities, page 262*
Low coolant temperature	Remove and check thermostat.	Contact Dealer
Air in fuel system	Contact Dealer.	Contact Dealer
Dirty or faulty injectors	Contact Dealer.	Contact Dealer
Symptom: Lack of power.		
Incorrect timing	Contact Dealer.	Contact Dealer
Engine oil viscosity too high	Use recommended oil.	*5.1.3 Lubricants, Fluids, and System Capacities, page 262*
Intake air restriction	Service air cleaner.	*Cleaning Primary Air Filter, page 310*
Clogged fuel filter	Replace primary fuel filter, and if necessary, replace secondary fuel filter.	*5.10.1 Maintaining Fuel Filters, page 316*
High back pressure	Clean out or replace exhaust canisters.	*5.9.5 Inspecting Exhaust System, page 312*
Improper type of fuel	Use proper fuel.	*5.1.2 Fuel Specifications, page 261*
High or low engine temperature	Remove and check thermostat.	Contact Dealer
Improper valve clearance	Contact Dealer.	Contact Dealer
Faulty injectors	Contact Dealer.	Contact Dealer
Symptom: Engine temperature is below normal.		
Defective thermostat	Remove and check thermostat.	Contact Dealer
Symptom: Warning alarm sounds.		
Engine overheated	Check thermostat.	Contact Dealer
Engine overheated	Check coolant level.	*5.6.5 Checking Engine Coolant Level, page 288*

Problem	Solution	Section
Low engine oil pressure	Check oil level.	*5.6.1 Checking Engine Oil Level, page 282*
Low charge oil pressure	Check oil level.	*5.6.3 Checking Hydraulic Oil, page 284*
Symptom: Engine overheats.		
Low coolant level	Fill reserve tank to proper level. Check system for leaks.	*Adding Coolant, page 328*
Water only for coolant	Replace with antifreeze.	*Adding Coolant, page 328*
Engine overloaded	Reduce ground speed.	*Driving Forward in Cab-Forward Mode, page 125*
Defective radiator cap	Replace cap.	
Dirty radiator screen	Clean screen.	*5.8.2 Cleaning Cooler Module, page 299*
Dirty radiator core	Clean radiator.	*5.8.2 Cleaning Cooler Module, page 299*
Cooling system dirty	Flush cooling system.	*5.12.1 Changing Engine Coolant, page 327*
Defective thermostat	Remove and check thermostat.	Contact Dealer
Defective temperature gauge or sender	Check coolant temperature with thermometer. Replace gauge if necessary.	Contact Dealer
Defective water pump	Contact Dealer.	Contact Dealer
Symptom: High fuel consumption.		
Clogged or dirty air cleaner	Service air cleaner.	*Cleaning Primary Air Filter, page 310*
Engine overloaded	Reduce ground speed.	*Driving Forward in Cab-Forward Mode, page 125*
Improper valve clearance	Contact Dealer.	Contact Dealer
Engine out of time	Contact Dealer.	Contact Dealer
Dirty injector nozzles	Contact Dealer.	Contact Dealer
Low engine temperature	Check thermostat.	Contact Dealer
Improper type of fuel	Use proper fuel.	*5.1.2 Fuel Specifications, page 261*
Symptom: Starter cranks slowly or will not operate.		
Low battery output	Check battery charge.	*Maintaining a Battery, page 333*
Loose or corroded battery connections	Clean and tighten loose connections.	*Maintaining a Battery, page 333*
Controls not in NEUTRAL	Move GSL to NEUTRAL.	*Starting the Engine, page 115*
Controls not in NEUTRAL	Move steering wheel to locked (centered) position.	*Driving in Reverse in Cab-Forward Mode, page 127*
Controls not in NEUTRAL	Disengage header.	*Engaging and Disengaging the Header, page 199*
Relay not functioning	Check relay and wire connections.	*Checking and Replacing Fuses, page 368*

Problem	Solution	Section
Main fuse defective/blown	Replace main fuse.	*Checking and Replacing Fuses, page 368*
Key power fuse blown	Replace.	*Checking and Replacing Fuses, page 368*
Key switch worn or terminals loose	Contact Dealer.	Contact Dealer
Switch at Interlock not closed or defective	Adjust switch or replace Contact your Dealer.	Contact Dealer
Crankcase oil too high viscosity	Use recommended oil.	*5.1.3 Lubricants, Fluids, and System Capacities, page 262*

7.2 Electrical Troubleshooting

Problem	Solution	Section
Symptom: Low voltage and/or the battery will not charge.		
Defective battery	Have battery tested.	*5.13.1 Batteries, page 333*
Loose or corroded connections	Clean and tighten battery connections.	*Maintaining a Battery, page 333*
Defective alternator belt	Replace worn belt.	*Replacing Engine Fan Drive Belt, page 351*
Alternator or voltage regulator not connected properly	Connect properly.	*5.13.1 Batteries, page 333*
Dirty or defective alternator, defective voltage regulator, or high resistance in circuit	Contact Dealer.	Contact Dealer
Symptom: Lights dim.		
High resistance in circuit or poor ground on lights	Check the wiring circuit for a break in a wire or a poor ground.	—
Symptom: Lights do not light.		
Burned out or defective light bulb	Replace light bulb.	*Replacing Headlight Bulb – Engine-Forward, page 360*
Burned out or defective light bulb	Replace light bulb.	*Replacing Bulbs in Standard Work Lights, page 359*
Burned out or defective light bulb	Replace light bulb.	*Replacing LED Lights – Deluxe Cab Only, page 362*
Burned out or defective light bulb	Replace light bulb.	*Replacing Bulbs in Red and Amber Lights, page 362*
Burned out or defective light bulb	Replace light bulb.	*Replacing Red Tail Lights, page 363*
Burned out or defective light bulb	Replace light bulb.	*Replacing Beacon Lights, page 364*
Burned out or defective light bulb	Replace light bulb.	*Replacing the Cabin Dome Bulb, page 364*
Broken wiring	Check wiring for broken wire or shorts.	—
Poor ground on lights	Clean and tighten ground wires.	—
Open or defective circuit breaker	Check circuit breaker.	*5.14.7 Accessing Circuit Breakers and Fuses, page 367*
Defective relay	Replace relay.	*Replacing Circuit Breakers and Relays, page 369*
Symptom: Wrong turn signal/indicator lights activated.		
Reversed wiring	Contact Dealer.	Contact Dealer
Symptom: No current to tab.		
Broken or disconnected wire	Contact Dealer.	Contact Dealer
Circuit breaker tripped	Breaker automatically resets.	—

7.3 Hydraulics Troubleshooting

Problem	Solution	Section
Symptom: Header or reel is not lifting.		
Appropriate solenoids not being energized by activating switch	Contact Dealer.	Contact Dealer
Symptom: Reel and/or conveyor is not turning.		
Flow controls adjusted too low	Toggle speed controls on Harvest Performance Tracker (HPT) display to increase flow.	*Conveyor Speed Adjustment Buttons, page 76* and *Reel and Disc Speed Switch, page 73*
Flow controls adjusted too low	Toggle speed controls on Harvest Performance Tracker (HPT) display to increase flow.	*Conveyor Speed Adjustment Buttons, page 76* and *Reel and Disc Speed Switch, page 73*
Appropriate solenoid on flow control block not being energized	Contact Dealer.	Contact Dealer
Relief pressure too low	Check/adjust/clean relief valve.	Contact Dealer
Symptom: Hydraulic oil high-temperature alarm activates.		
Hydraulic oil cooling system not working properly	Check/clean cooling box.	*5.8.2 Cleaning Cooler Module, page 299*

7.4 Header Drive Troubleshooting

Problem	Solution	Section
Symptom: Header drive is not engaging.		
OPERATOR PRESENCE switch not closed or faulty	Occupy operator's seat or replace switch. Contact your Dealer.	Contact Dealer
OPERATOR PRESENCE switch not closed or faulty	Occupy operator's seat or replace switch. Contact your Dealer.	Contact Dealer
Appropriate solenoid not being energized by activating switch	Contact Dealer.	Contact Dealer
Couplers not connected	Contact Dealer.	Contact Dealer
Faulty pump or flow controls	Contact Dealer.	Contact Dealer
Control solenoids disconnected	Contact Dealer.	Contact Dealer
Header ID not detected	Attach header or check wiring. Contact your Dealer.	Contact Dealer
Symptom: Header drive lacks power.		
Relief valve setting too low	Contact Dealer.	Contact Dealer
Header drive overload	Reduce ground speed.	—
Symptom: Warning alarm sounds.		
Header drive overload	Reduce ground speed.	—
Relief valve setting too low	Contact Dealer.	Contact Dealer

7.5 Traction Drive Troubleshooting

Problem	Solution	Section
Symptom: The warning alarm sounds and the low charge pressure warning appears on the Harvest Performance Tracker (HPT).		
Low hydraulic oil level	Stop engine, and add oil to hydraulic system.	*5.6.3 Checking Hydraulic Oil, page 284*
Low hydraulic pressure	Contact Dealer.	Contact Dealer
Faulty sender	Contact Dealer.	Contact Dealer
Symptom: Wheels lack necessary ability to pull on a grade or when pulling out of a ditch.		
Internal pump or motor damage	Contact Dealer.	Contact Dealer
Insufficient torque at drive wheels	Maintain engine rpm, decrease GSL setting.	—
Loose or worn controls	Check controls.	Contact Dealer
Brakes binding or not releasing fully	Check charge pressure.	Contact Dealer
Relief valve in tandem pump dirty or damaged	Replace relief valve.	Contact Dealer
Symptom: With the steering wheel centered, one wheel pulls more than the other wheel.		
Leakage at pump or motor	Contact Dealer.	Contact Dealer
Binding or interference with controls under cab	Contact Dealer.	Contact Dealer
Faulty relief valve	Repair or replace valve Contact Dealer.	Contact Dealer
Symptom: Both wheels will not pull in forward or in reverse.		
Loose hardware on pump controls	Repair or tighten.	Contact Dealer
Brakes binding or not releasing fully	Check charge pressure.	Contact Dealer
Low oil level and low charge pressure	Check oil reservoir level.	*5.6.3 Checking Hydraulic Oil, page 284*
Wheel drives disengaged	Engage wheel drives.	Contact Dealer
Servo input loose	Check servo.	Contact Dealer
Failed pump	Contact Dealer.	Contact Dealer
Symptom: One wheel will not pull in forward or in reverse.		
Broken pump arm or shaft	Contact Dealer.	Contact Dealer
Steering controls worn or defective	Check GSL and steering for loose, worn or damaged ball joints and connecting rods.	Contact Dealer
High pressure relief valve stuck open, damaged seat	Contact Dealer.	Contact Dealer
Brakes binding or not releasing fully	Check charge pressure.	Contact Dealer
Failed pump, motor or final drive	Contact Dealer.	Contact Dealer
Symptom: Excessive noise from the drive system.		
Mechanical interference in steering or ground speed linkage	Remove interference.	Contact Dealer

Problem	Solution	Section
Brakes binding or not releasing fully	Check charge pressure.	Contact Dealer
Faulty pump or motor	Contact Dealer.	Contact Dealer
Air in system	Check lines for leakage.	—
Hydraulic line clamps loose	Tighten clamps.	—
Ball joints are worn	Replace worn parts.	—
Symptom: The hydraulic oil filter leaks at a seal.		
Not properly tightened	Tighten filter element.	*Installing Return Oil Filter, page 279* or *Installing Charge Filter, page 281*
Damaged seal or threads	Replace filter or filter head.	*Removing Return Oil Filter, page 278* or *Removing Charge Filter, page 280*

7.6 Steering and Ground Speed Control Troubleshooting

Problem	Solution	Section
Symptom: The machine will not steer straight.		
Linkage worn or loose	Adjust steering chain tension. Replace worn parts. Adjust linkage.	—
Symptom: The machine moves on flat ground with controls set to neutral.		
Neutral interlock misadjusted	Contact Dealer.	—
Parking brake not functioning	Contact Dealer.	—
Ground speed lever (GSL) servo misadjusted	Contact Dealer.	—
GSL cable misadjusted	Contact Dealer.	—
Symptom: Steering wheel will not lock with the GSL set to PARK.		
Transmission interlock misadjusted	Contact Dealer.	—
Faulty GSL neutral switch	Contact Dealer.	—
Interlock springs not pulling interlock closed	Replace or reattach springs.	—
Faulty switch on PARK	Replace switch or adjust.	—
Symptom: Insufficient road speed.		
Ground speed limit is too low	Increase limit.	*Adjusting Ground Speed Limit, page 124*
Symptom: Maximum ground speed is too slow.		
Servo not adjusted properly	Contact Dealer.	—
Fault with wheel motor control	Contact Dealer.	—
GSL position sensor not calibrated or damaged	Contact Dealer.	—
Maximum speed limit is set at 10 mph	Increase speed limit.	*Adjusting Ground Speed Limit, page 124*
Symptom: Steering is too stiff or too loose.		
Steering chain tension is out of adjustment	Adjust steering chain tension.	—
Ball joints or steering linkage pivot stiff	Replace or repair.	—

7.7 Cab Air Troubleshooting

Problem	Solution	Section
Symptom: The blower fan will not run.		
Burned out motor	Contact Dealer.	—
Burned out switch	Contact Dealer.	—
Motor shaft tight or bearings worn	Contact Dealer.	—
Faulty wiring—loose or broken	Contact Dealer.	—
Blower rotors in contact with housing	Contact Dealer.	—
Burned out motor	—	—
Symptom: The blower fan is operating, but air doesn't blow into the cab.		
Dirty fresh air filter	Clean fresh air filter.	*Inspecting and Cleaning Fresh Air Intake Filter Element, page 294*
Dirty recirculating air filter	Clean return air filter.	*5.8.1 Servicing Return Air Filter, page 298*
Evaporator clogged	Clean evaporator.	*Cleaning Air Conditioning Evaporator Core, page 346*
Air flow passage blocked	Remove blockage.	—
Symptom: Heater is not heating.		
Heater shut-off valve at engine closed	Open valve.	*3.10.1 Heater Shut-Off Valve, page 59*
Defective thermostat in engine water outlet manifold	Replace thermostat.	Contact Dealer.
Heater temperature control defective	Replace control.	Contact Dealer.
No thermostat in engine water outlet manifold	Install thermostat.	Contact Dealer.
Symptom: Air louvers emitting odor.		
Plugged drainage hose	Blow out hose with compressed air.	—
Dirty filters	Clean filters.	Contact Dealer.
Symptom: Air conditioning is not cooling.		
Low refrigerant level	Add refrigerant.	Contact Dealer.
Clutch coil burned out or disconnected	Contact Dealer.	—
Blower motor disconnected or burned out	Contact Dealer.	—
Switch contacts in thermostat burned excessively, or sensing element defective	Replace thermostat.	Contact Dealer.
Compressor partially or completely seized	Remove compressor for service or replacement.	Contact Dealer.
Condenser fins plugged	Clean condenser.	*Cleaning Left Cooling Module, page 299*

Problem	Solution	Section
Loose or broken compressor drive belt	Replace drive belt and/or tighten to specifications.	*Tensioning Air Conditioner Compressor Belts, page 352* and *Replacing Air Conditioner Compressor Belts, page 353*
Dirty filters	Clean fresh air and recirculation filters.	*5.8.1 Servicing Return Air Filter, page 298*
Broken or disconnected electrical wire	Check all terminals for loose connections; check wiring for hidden breaks.	—
Broken or disconnected ground wire	Check ground wire to see if loose, broken, or disconnected.	—
Expansion valve stuck in open or closed position	Contact Dealer.	—
Broken refrigerant line	Contact Dealer.	—
Leak in system	Contact Dealer.	—
Compressor shaft seal leaking	Contact Dealer.	—
Clogged screen in receiver-drier; plugged hose or coil	Contact Dealer.	—
Symptom: Air conditioning is not producing sufficient cooling (meaning that air temperature in the windrower cab, measured at the louvered vent, can be maintained at 14°C [57°F] below ambient air temperature)		
Compressor clutch slipping	Remove clutch assembly for service or replacement.	Contact Dealer.
Thermostat defective or improperly adjusted	Replace thermostat.	Contact Dealer.
Clogged air filters	Remove air filters, and clean or replace as necessary.	*5.8.1 Servicing Return Air Filter, page 298*
Heater circuit is open	Lower temperature control in cab, and close valve on engine).	*3.10.3 Climate Controls, page 60* and *3.10.1 Heater Shut-Off Valve, page 59*
Insufficient air circulation over condenser coil; fins clogged with dirt or insects	Clean condenser.	*Cleaning Left Cooling Module, page 299*
Evaporator fins clogged	Clean evaporator fins (under cab floor).	*Cleaning Air Conditioning Evaporator Core, page 346*
Refrigerant low	Contact Dealer.	—
Clogged expansion valve	Contact Dealer.	—
Clogged receiver-drier	Contact Dealer.	—
Excessive moisture in system	Contact Dealer.	—
Air in system	Contact Dealer.	—
Blower motor sluggish in operation	Contact Dealer.	—
Symptom: Air conditioning cools intermittently.		
Unit icing up due to thermostat adjusted too low	Adjust thermostat.	Contact Dealer.

Problem	Solution	Section
Unit icing up due to excessive moisture in system	Contact Dealer.	—
Unit icing up due to incorrect super-heat adjustment in the expansion valve	Contact Dealer.	—
Thermostat defective	Contact Dealer.	—
Defective blower switch or blower motor	Contact Dealer.	—
Partially open, improper ground or loose connection in compressor clutch coil	Contact Dealer.	—
Compressor clutch slipping	Contact Dealer.	—
Symptom: Air conditioning system too noisy.		
Defective winding or improper connection in compressor clutch coil or relay	Contact Dealer.	—
Excessive charge in system	Contact Dealer.	—
Low charge in system	Contact Dealer.	—
Excessive moisture in system	Contact Dealer.	—
Loose or excessively worn drive belt	Tighten or replace as required.	*Tensioning Air Conditioner Compressor Belts, page 352* and *Replacing Air Conditioner Compressor Belts, page 353*
Noisy clutch	Remove clutch for service or replacement as required.	Contact Dealer.
Noisy compressor	Check mountings and repair. Remove compressor for service or replacement.	Contact Dealer.
Compressor oil level low	Add SP-15 PAG refrigerant oil.	Contact Dealer.
Blower fan noisy due to excessive wear	Remove blower motor for service or replacement as necessary.	Contact Dealer.
Symptom: Cab windows fog up.		
High humidity	Run A/C to dehumidify air and heater to control temperature.	*3.10.3 Climate Controls, page 60*

7.8 Operator's Station Troubleshooting

Problem	Solution	Section
Rough ride.		
Seat suspension not adjusted for operator's weight	Adjust seat suspension.	*3.3.3 Suspension and Height, page 43*
High air pressure in tires	Deflate to proper pressure.	*5.6.4 Checking Tire Pressures, page 285*
Cab suspension too stiff	Adjust suspension.	Contact Dealer.

Chapter 8: Reference

8.1 Torque Specifications

The following tables provide correct torque values for various bolts, cap screws, and hydraulic fittings.

- Tighten all bolts to torque values specified in charts (unless otherwise noted throughout this manual).
- Replace hardware with same strength and grade of bolt.
- Use torque value tables as a guide and periodically check tightness of bolts.
- Understand torque categories for bolts and cap screws by using their identifying head markings.

Jam nuts

When applying torque to finished jam nuts, multiply the torque applied to regular nuts by f=0.65.

Self-tapping screws

Standard torque is to be used (**NOT** to be used on critical or structurally important joints).

8.1.1 Metric Bolt Specifications

Table 8.1 Metric Class 8.8 Bolts and Class 9 Free Spinning Nut

Nominal Size (A)	Torque (Nm)		Torque (lbf·ft) (*lbf·in)	
	Min.	Max.	Min.	Max.
3-0.5	1.4	1.6	*13	*14
3.5-0.6	2.2	2.5	*20	*22
4-0.7	3.3	3.7	*29	*32
5-0.8	6.7	7.4	*59	*66
6-1.0	11.4	12.6	*101	*112
8-1.25	28	30	20	23
10-1.5	55	60	40	45
12-1.75	95	105	70	78
14-2.0	152	168	113	124
16-2.0	236	261	175	193
20-2.5	460	509	341	377
24-3.0	796	879	589	651

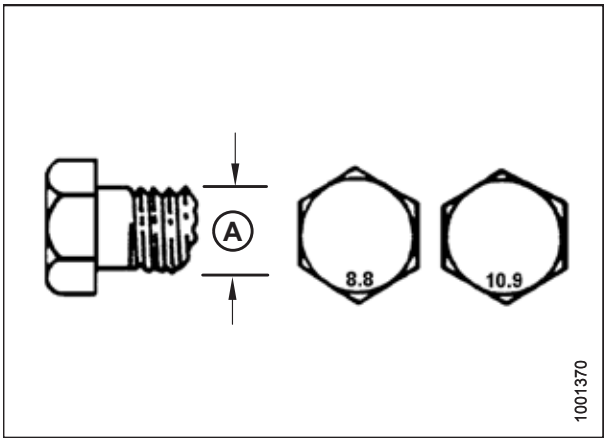

Figure 8.1: Bolt Grades

Table 8.2 Metric Class 8.8 Bolts and Class 9 Distorted Thread Nut

Nominal Size (A)	Torque (Nm)		Torque (lbf·ft) (*lbf·in)	
	Min.	Max.	Min.	Max.
3-0.5	1	1.1	*9	*10
3.5-0.6	1.5	1.7	*14	*15
4-0.7	2.3	2.5	*20	*22
5-0.8	4.5	5	*40	*45
6-1.0	7.7	8.6	*69	*76
8-1.25	18.8	20.8	*167	*185
10-1.5	37	41	28	30
12-1.75	65	72	48	53
14-2.0	104	115	77	85
16-2.0	161	178	119	132
20-2.5	314	347	233	257
24-3.0	543	600	402	444

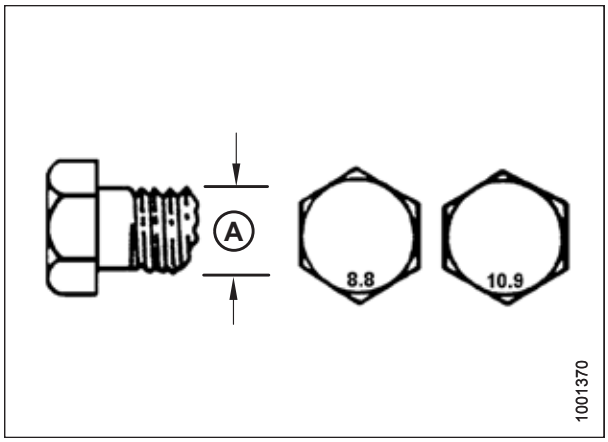

Figure 8.2: Bolt Grades

Table 8.3 Metric Class 10.9 Bolts and Class 10 Free Spinning Nut

Nominal Size (A)	Torque (Nm)		Torque (lbf·ft) (*lbf·in)	
	Min.	Max.	Min.	Max.
3-0.5	1.8	2	*18	*19
3.5-0.6	2.8	3.1	*27	*30
4-0.7	4.2	4.6	*41	*45
5-0.8	8.4	9.3	*82	*91
6-1.0	14.3	15.8	*140	*154
8-1.25	38	42	28	31
10-1.5	75	83	56	62
12-1.75	132	145	97	108
14-2.0	210	232	156	172
16-2.0	326	360	242	267
20-2.5	637	704	472	521
24-3.0	1101	1217	815	901

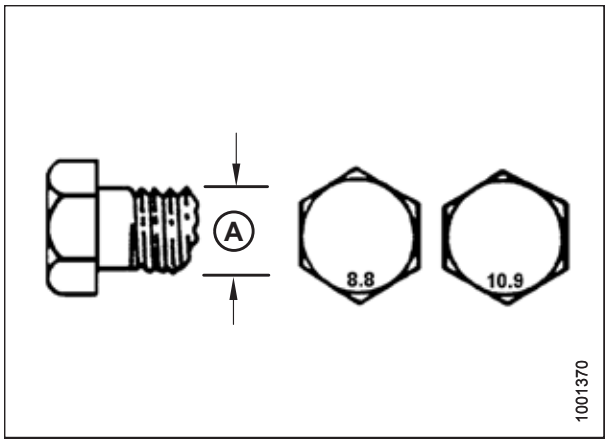

Figure 8.3: Bolt Grades

Table 8.4 Metric Class 10.9 Bolts and Class 10 Distorted Thread Nut

Nominal Size (A)	Torque (Nm)		Torque (lbf·ft) (*lbf·in)	
	Min.	Max.	Min.	Max.
3-0.5	1.3	1.5	*12	*13
3.5-0.6	2.1	2.3	*19	*21
4-0.7	3.1	3.4	*28	*31
5-0.8	6.3	7	*56	*62
6-1.0	10.7	11.8	*95	*105
8-1.25	26	29	19	21
10-1.5	51	57	38	42
12-1.75	90	99	66	73
14-2.0	143	158	106	117
16-2.0	222	246	165	182
20-2.5	434	480	322	356
24-3.0	750	829	556	614

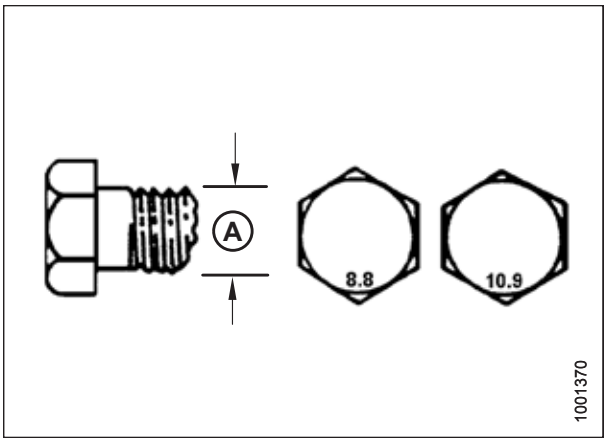

Figure 8.4: Bolt Grades

8.1.2 Metric Bolt Specifications Bolting into Cast Aluminum

Table 8.5 Metric Bolt Bolting into Cast Aluminum

Nominal Size (A)	Bolt Torque			
	8.8 (Cast Aluminum)		10.9 (Cast Aluminum)	
	Nm	lbf·ft	Nm	lbf·ft
M3	–	–	–	1
M4	–	–	4	2.6
M5	–	–	8	5.5
M6	9	6	12	9
M8	20	14	28	20
M10	40	28	55	40
M12	70	52	100	73
M14	–	–	–	–
M16	–	–	–	–

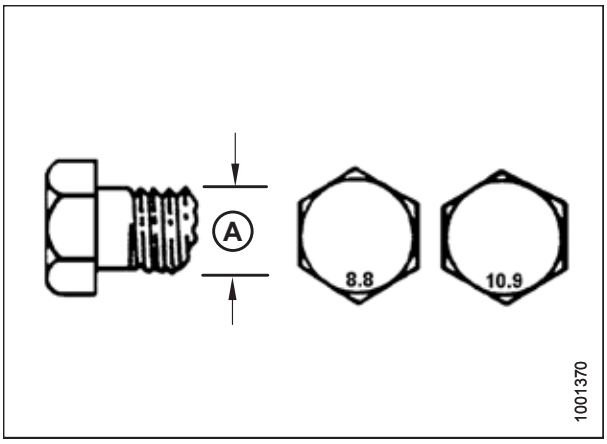

Figure 8.5: Bolt Grades

8.1.3 O-Ring Boss Hydraulic Fittings – Adjustable

1. Inspect O-ring (A) and seat (B) for dirt or obvious defects.
2. Back off lock nut (C) as far as possible. Ensure that washer (D) is loose and is pushed toward lock nut (C) as far as possible.
3. Check that O-ring (A) is **NOT** on threads and adjust if necessary.
4. Apply hydraulic system oil to O-ring (A).

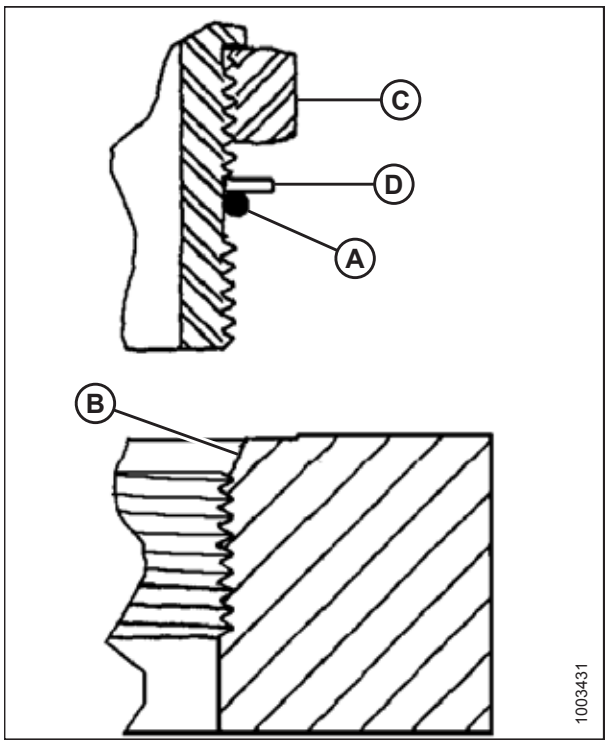

Figure 8.6: Hydraulic Fitting

5. Install fitting (B) into port until backup washer (D) and O-ring (A) contact part face (E).
6. Position angle fittings by unscrewing no more than one turn.
7. Turn lock nut (C) down to washer (D) and tighten to torque shown. Use two wrenches, one on fitting (B) and other on lock nut (C).
8. Check final condition of fitting.

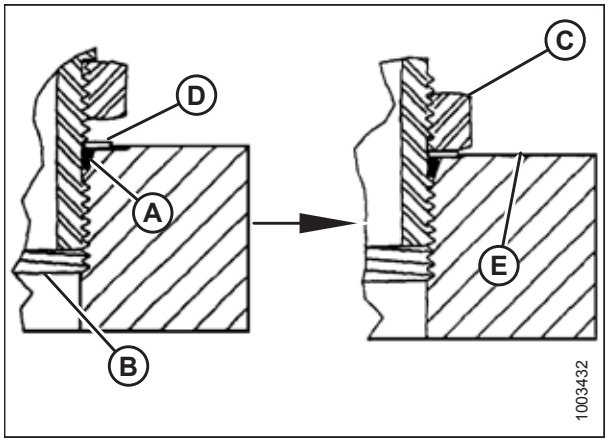

Figure 8.7: Hydraulic Fitting

Table 8.6 O-Ring Boss (ORB) Hydraulic Fittings – Adjustable

SAE Dash Size	Thread Size (in.)	Torque Value[20]	
		Nm	lbf·ft (*lbf·in)
-2	5/16–24	6–7	*53–62
-3	3/8–24	12–13	*106–115
-4	7/16–20	19–21	14–15
-5	1/2–20	21–33	15–24
-6	9/16–18	26–29	19–21
-8	3/4–16	46–50	34–37
-10	7/8–14	75–82	55–60
-12	1 1/16–12	120–132	88–97
-14	1 3/8–12	153–168	113–124
-16	1 5/16–12	176–193	130–142
-20	1 5/8–12	221–243	163–179
-24	1 7/8–12	270–298	199–220
-32	2 1/2–12	332–365	245–269

20. Torque values shown are based on lubricated connections as in reassembly.

8.1.4 O-Ring Boss Hydraulic Fittings – Non-Adjustable

1. Inspect O-ring (A) and seat (B) for dirt or obvious defects.
2. Check that O-ring (A) is **NOT** on threads and adjust if necessary.
3. Apply hydraulic system oil to O-ring.
4. Install fitting (C) into port until fitting is hand-tight.
5. Torque fitting (C) according to values in Table *8.7, page 410*.
6. Check final condition of fitting.

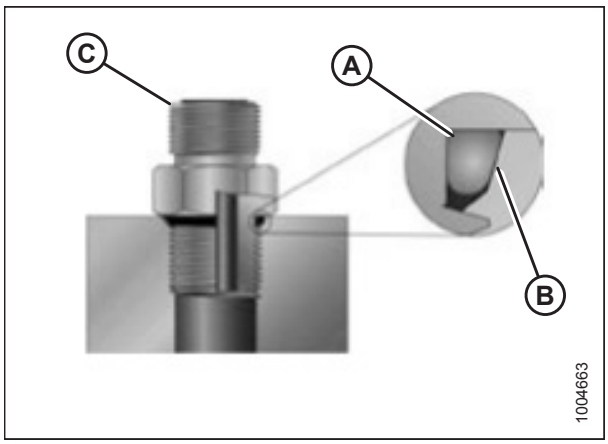

Figure 8.8: Hydraulic Fitting

Table 8.7 O-Ring Boss (ORB) Hydraulic Fittings – Non-Adjustable

SAE Dash Size	Thread Size (in.)	Torque Value[21]	
		Nm	lbf·ft (*lbf·in)
-2	5/16–24	6–7	*53–62
-3	3/8–24	12–13	*106–115
-4	7/16–20	19–21	14–15
-5	1/2–20	21–33	15–24
-6	9/16–18	26–29	19–21
-8	3/4–16	46–50	34–37
-10	7/8–14	75–82	55–60
-12	1 1/16–12	120–132	88–97
-14	1 3/8–12	153–168	113–124
-16	1 5/16–12	176–193	130–142
-20	1 5/8–12	221–243	163–179
-24	1 7/8–12	270–298	199–220
-32	2 1/2–12	332–365	245–269

21. Torque values shown are based on lubricated connections as in reassembly.

8.1.5 O-Ring Face Seal Hydraulic Fittings

1. Check components to ensure that sealing surfaces and fitting threads are free of burrs, nicks, scratches, or any foreign material.



Figure 8.9: Hydraulic Fitting

2. Apply hydraulic system oil to O-ring (B).
3. Align tube or hose assembly so that flat face of sleeve (A) or (C) comes in full contact with O-ring (B).
4. Thread tube or hose nut (D) until hand-tight. The nut should turn freely until it is bottomed out.
5. Torque fittings according to values in Table *8.8, page 411*.

   NOTE:

   If applicable, hold hex on fitting body (E) to prevent rotation of fitting body and hose when tightening fitting nut (D).
6. Use three wrenches when assembling unions or joining two hoses together.
7. Check final condition of fitting.

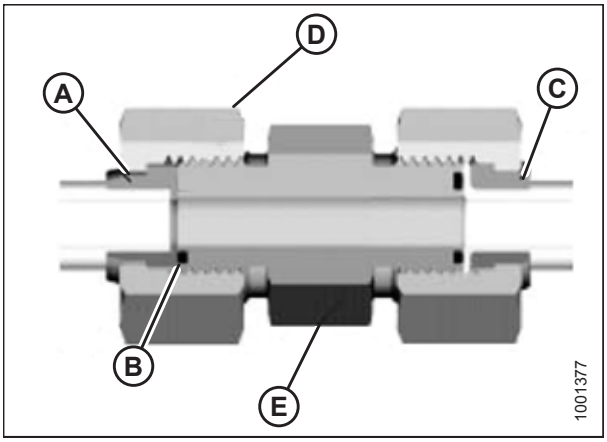

Figure 8.10: Hydraulic Fitting

Table 8.8 O-Ring Face Seal (ORFS) Hydraulic Fittings

SAE Dash Size	Thread Size (in.)	Tube O.D. (in.)	Torque Value[22]	
			Nm	lbf·ft
-3	Note[23]	3/16	–	–
-4	9/16	1/4	25–28	18–21
-5	Note[23]	5/16	–	–
-6	11/16	3/8	40–44	29–32
-8	13/16	1/2	55–61	41–45
-10	1	5/8	80–88	59–65
-12	1 3/16	3/4	115–127	85–94
-14	Note[23]	7/8	–	–

22. Torque values and angles shown are based on lubricated connection as in reassembly.
23. O-ring face seal type end not defined for this tube size.

Table 8.8 O-Ring Face Seal (ORFS) Hydraulic Fittings (continued)

SAE Dash Size	Thread Size (in.)	Tube O.D. (in.)	Torque Value[24]	
			Nm	lbf·ft
-16	1 7/16	1	150–165	111–122
-20	1 11/16	1 1/4	205–226	151–167
-24	1–2	1 1/2	315–347	232–256
-32	2 1/2	2	510–561	376–414

8.1.6 Tapered Pipe Thread Fittings

Assemble pipe fittings as follows:

1. Check components to ensure that fitting and port threads are free of burrs, nicks, scratches, or any form of contamination.
2. Apply pipe thread sealant (paste type) to external pipe threads.
3. Thread fitting into port until hand-tight.
4. Torque connector to appropriate torque angle. The turns from finger tight (TFFT) and flats from finger tight (FFFT) values are shown in Table *8.9, page 412*. Make sure that tube end of a shaped connector (typically 45 degree or 90 degree) is aligned to receive incoming tube or hose assembly. Always finish alignment of fitting in tightening direction. Never back off (loosen) pipe threaded connectors to achieve alignment.
5. Clean all residue and any excess thread conditioner with appropriate cleaner.
6. Assess final condition of fitting. Pay special attention to possibility of cracks to port opening.
7. Mark final position of fitting. If a fitting leaks, disassemble fitting and check for damage.

NOTE:

Overtorque failure of fittings may not be evident until fittings are disassembled.

Table 8.9 Hydraulic Fitting Pipe Thread

Tapered Pipe Thread Size	Recommended TFFT	Recommended FFFT
1/8–27	2–3	12–18
1/4–18	2–3	12–18
3/8–18	2–3	12–18
1/2–14	2–3	12–18
3/4–14	1.5–2.5	12–18
1–11 1/2	1.5–2.5	9–15
1 1/4–11 1/2	1.5–2.5	9–15
1 1/2–11 1/2	1.5–2.5	9–15
2–11 1/2	1.5–2.5	9–15

24. Torque values and angles shown are based on lubricated connection as in reassembly.

8.2 Conversion Chart

Table 8.10 Conversion Chart

Quantity	SI Units (Metric)		Factor	US Customary Units (Standard)	
	Unit Name	Abbreviation		Unit Name	Abbreviation
Area	hectare	ha	x 2.4710 =	acre	acres
Flow	liters per minute	L/min	x 0.2642 =	US gallons per minute	gpm
Force	Newton	N	x 0.2248 =	pound force	lbf
Length	millimeter	mm	x 0.0394 =	inch	in.
Length	meter	m	x 3.2808 =	foot	ft.
Power	kilowatt	kW	x 1.341 =	horsepower	hp
Pressure	kilopascal	kPa	x 0.145 =	pounds per square inch	psi
Pressure	megapascal	MPa	x 145.038 =	pounds per square inch	psi
Pressure	bar (Non-SI)	bar	x 14.5038 =	pounds per square inch	psi
Torque	Newton meter	Nm	x 0.7376 =	pound feet or foot pounds	lbf·ft
Torque	Newton meter	Nm	x 8.8507 =	pound inches or inch pounds	lbf·in
Temperature	degrees Celsius	°C	(°C x 1.8) + 32 =	degrees Fahrenheit	°F
Velocity	meters per minute	m/min	x 3.2808 =	feet per minute	ft/min
Velocity	meters per second	m/s	x 3.2808 =	feet per second	ft/s
Velocity	kilometers per hour	km/h	x 0.6214 =	miles per hour	mph
Volume	liter	L	x 0.2642 =	US gallon	US gal
Volume	milliliter	mL	x 0.0338 =	ounce	oz.
Volume	cubic centimeter	cm^3 or cc	x 0.061 =	cubic inch	$in.^3$
Weight	kilogram	kg	x 2.2046 =	pound	lb.

8.3 Windrower Fault Codes

The Harvest Performance Tracker (HPT) displays the windrower fault codes as a sequence of three numbers (AAA.BBBBBB.CC). The sequence is defined as follows:

- AAA = The Source Address (SA) defines which module generated the fault.
- BBBBBB = The SPN is the description of the unique fault value.
- CC = The FMI indicated the fault's level of severity.

Source address (SA) numbers refer to the following locations:

- 23: Harvest Performance Tracker (HPT) display
- 25: HVAC box
- 104: Master controller and connected extension modules
- 176: Roof relay module
- 178: Chassis relay module
- 190: Console and ground speed lever (GSL)

Fault Codes			Telltale	Short Description	Full Fault Description	Recommended Fix/Check Message
SA	SPN	FMI				
23	521489	1	Electrical System	Master Module Offline	CAN 1 Offline	Check Module connectors; if OK, Contact Dealer.
23	521489	2	Electrical System	Master Module Offline	CAN 2 Offline	Check Module connectors; if OK, Contact Dealer.
23	521489	3	Electrical System	Master Module Offline	CAN 1 & 2 Offline	Check Module connectors; if OK, Contact Dealer.
23	521489	4	Electrical System	Master Module Offline	CAN 3 Offline	Check Module connectors; if OK, Contact Dealer.
23	521489	5	Electrical System	Master Module Offline	CAN 1 & 3 Offline	Check Module connectors; if OK, Contact Dealer.
23	521489	6	Electrical System	Master Module Offline	CAN 2 & 3 Offline	Check Module connectors; if OK, Contact Dealer.
23	521489	7	Electrical System	Master Module Offline	CAN 1 & 2 & 3 Offline	Check Module connectors and Module fuse; if OK, Contact Dealer.
23	521490	1	Electrical System	Ext. Module Offline	Firewall Extension Module Offline	Check Module connectors and Module fuse; if OK, Contact Dealer.
23	521491	1	Electrical System	Ext. Module Offline	Chassis Extension Module Offline	Check Module connectors and Module fuse; if OK, Contact Dealer.
23	521492	1	Electrical System	Display Offline	CAN 1 Offline	Check Module connectors; if OK, Contact Dealer.
23	521492	2	Electrical System	Display Offline	CAN 2 Offline	Check Module connectors; if OK, Contact Dealer.
23	521492	3	Electrical System	Display Offline	CAN 1 & 2 Offline	Check Module connectors; if OK, Contact Dealer.
23	521493	1	Electrical System	Relay Module Offline	Roof Relay Module Offline	Check Module connectors and Module fuse; if OK, Contact Dealer.
23	521494	1	Electrical System	Relay Module Offline	Chassis Relay Module Offline	Check Module connectors and Module fuse; if OK, Contact Dealer.
23	521495	1	Electrical System	Console Offline	Console Offline	Check Module connectors and Module fuse; if OK, Contact Dealer.
23	521496	1	Electrical System	HVAC ECU Offine	HVAC ECU Offine	Check Module connectors and Module fuse; if OK, Contact Dealer.

Fault Codes			Telltale	Short Description	Full Fault Description	Recommended Fix/Check Message
SA	SPN	FMI				
23	521497	1	Electrical System	Engine ECM Offline	Engine Control Module Offline	First check if cooling module door is open or cooling module door sensor is defective. If not then check engine control module connectors and module fuse ; if OK, Contact Dealer.
23	521498	1	Electrical System	CAN 1 Offline	CAN 1 Offline	Check CAN Harnessing; if OK, Contact Dealer.
23	521499	1	Electrical System	CAN 2 Offline	CAN 2 Offline	Check CAN Harnessing; if OK, Contact Dealer.
23	521500	1	Electrical System	CAN 3 Offline	CAN 3 Offline	Check CAN Harnessing; if OK, Contact Dealer.
25	168	1	Electrical System	HVAC	Low voltage - Below normal, most severe	Check HVAC power supply. Contact Dealer.
25	520193	5	Electrical System	HVAC	Clutch low amps - Current below normal	Inspect A/C clutch wiring for damage. Contact Dealer.
25	520193	6	Electrical System	HVAC	Clutch high amps - Current above normal	Inspect A/C clutch wiring for damage. Contact Dealer.
25	520194	3	Electrical System	HVAC	Evaporator temp open circuit - Voltage above normal	Check temperature sensor and wiring at the evaporator. Contact Dealer.
25	520194	4	Electrical System	HVAC	Evaporator temp shorted - Voltage below normal	Check temperature sensor and wiring at the evaporator. Contact Dealer.
25	170	3	Electrical System	HVAC	Cab temp open circuit - Voltage above normal	Inspect cab temperature and wiring. Contact Dealer.
25	170	4	Electrical System	HVAC	Cab temp shorted - Voltage below normal	Inspect cab temperature and wiring. Contact Dealer.
25	442	3	Electrical System	HVAC	Duct temp open circuit - Voltage above normal	Check HVAC duct temperature sensor wiring. Contact Dealer.
25	442	4	Electrical System	HVAC	Duct temp shorted - Voltage below normal	Check HVAC duct temperature sensor wiring. Contact Dealer.
104	111	1	Windrower	Engine Coolant Low	Below Normal Most Severe	Coolant Level - Data Valid But Below Normal Operational Range.

Fault Codes			Telltale	Short Description	Full Fault Description	Recommended Fix/Check Message
SA	SPN	FMI				
104	111	17	Windrower	Engine Coolant Low	Below Normal Least Severe	Coolant Level - Data Valid But Below Normal Operating Range.
104	521000	3	Electrical System	Fuel Level Sender	Low Alarm	Sensor voltage below 0.5 V. Check sensor power supply. Replace sensor if necessary.
104	521000	4	Electrical System	Fuel Level Sender	High Alarm	Sensor voltage above 4.5 V. Check for wiring damage. Replace sensor if necessary.
104	521000	5	Electrical System	Fuel Level Sender	Low Error	Sensor voltage below 0.5 V. Check sensor power supply. Replace sensor if necessary.
104	521000	6	Electrical System	Fuel Level Sender	High Error	Sensor voltage above 4.5 V. Check for wiring damage. Replace sensor if necessary.
104	521000	8	Electrical System	Fuel Level Sender	Vref Error	Reference voltage error. Check sensor wiring for damage.
104	521003	3	Electrical System	GSL Position	Low Alarm	Sensor voltage below 0.5 V. Check sensor power supply. Contact dealer to adjust and re-calibrate or replace sensor if necessary.
104	521003	4	Electrical System	GSL Position	High Alarm	Sensor voltage above 4.5 V. Check for wiring damage. Contact dealer to adjust and re-calibrate or replace sensor if necessary.
104	521003	5	Electrical System	GSL Position	Low Error	Sensor voltage below 0.5 V. Check sensor power supply. Contact dealer to adjust and re-calibrate or replace sensor if necessary.
104	521003	6	Electrical System	GSL Position	High Error	Sensor voltage above 4.5 V. Check for wiring damage. Contact Dealer to adjust and re-calibrate or replace sensor if necessary.
104	521003	8	Electrical System	GSL Position	Vref Error	Reference voltage error. Check sensor wiring for damage.
104	521006	5	Electrical System	Hyd Oil Temp Sensor	Low Error	Sensor voltage below 50 mV. Check sensor power supply. Replace sensor if necessary.
104	521006	6	Electrical System	Hyd Oil Temp Sensor	High Error	Sensor voltage above 1300 mV. Check for wiring damage. Replace sensor if necessary.
104	521006	8	Electrical System	Hyd Oil Temp Sensor	Vref Error	Reference voltage error. Check sensor wiring for damage.

Fault Codes			Telltale	Short Description	Full Fault Description	Recommended Fix/Check Message
SA	SPN	FMI				
104	521383	15	Windrower	Hydraulic Oil Hot	Above Normal Least Severe	Clean cooler cores with compressed air. If condition persists with clean cores, contact dealer.
104	521383	0	Windrower	Hyd Oil Very Hot	Above Normal Most Severe	Clean cooler cores with compressed air. If condition persists with clean cores, contact dealer. Continued operation may lead to machine damage.
104	521387	0	Windrower	Oil Charge Press High	Above Normal Most Severe	Charge pressure relief valve may be misadjusted or damaged. Contact dealer.
104	521387	17	Windrower	Oil Charge Press Low	Below Normal Least Severe	Charge pressure relief valve may be misadjusted or damaged. Contact dealer.
104	521387	1	Windrower	Oil Charge Press Low	Below Normal Most Severe	Shut down engine. Charge pressure relief valve may be misadjusted or damaged. Contact Dealer.
104	521021	3	Electrical System	Reel Height	Low Alarm	Sensor voltage below 0.5 V. Check sensor power supply. Adjust and re-calibrate or replace sensor if necessary.
104	521021	4	Electrical System	Reel Height	High Alarm	Sensor voltage above 4.5 V. Check for wiring damage. Adjust and re-calibrate or replace sensor if necessary.
104	521021	5	Electrical System	Reel Height	Low Error	Sensor voltage below 0.5 V. Check sensor power supply. Adjust and re-calibrate or replace sensor if necessary.
104	521021	6	Electrical System	Reel Height	High Error	Sensor voltage above 4.5 V. Check for wiring damage. Adjust and re-calibrate or replace sensor if necessary.
104	521021	8	Electrical System	Reel Height	Vref Error	Reference voltage error. Check sensor wiring for damage.
104	521024	3	Electrical System	Reel Fore-Aft	Low Alarm	Sensor voltage below 0.5 V. Check sensor power supply. Adjust and re-calibrate or replace sensor if necessary.
104	521024	4	Electrical System	Reel Fore-Aft	High Alarm	Sensor voltage above 4.5 V. Check for wiring damage. Adjust and re-calibrate or replace sensor if necessary.

Fault Codes			Telltale	Short Description	Full Fault Description	Recommended Fix/Check Message
SA	SPN	FMI				
104	521024	5	Electrical System	Reel Fore-Aft	Low Error	Sensor voltage below 0.5 V. Check sensor power supply. Adjust and re-calibrate or replace sensor if necessary.
104	521024	6	Electrical System	Reel Fore-Aft	High Error	Sensor voltage above 4.5 V. Check for wiring damage. Adjust and re-calibrate or replace sensor if necessary.
104	521024	8	Electrical System	Reel Fore-Aft	Vref Error	Reference voltage error. Check sensor wiring for damage.
104	521027	3	Electrical System	Lateral Tilt	Low Alarm	Sensor voltage below 0.5 V. Check sensor power supply. Adjust and re-calibrate or replace sensor if necessary.
104	521027	4	Electrical System	Lateral Tilt	High Alarm	Sensor voltage above 4.5 V. Check for wiring damage. Adjust and re-calibrate or replace sensor if necessary.
104	521027	5	Electrical System	Lateral Tilt	Low Error	Sensor voltage below 0.5 V. Check sensor power supply. Adjust and re-calibrate or replace sensor if necessary.
104	521027	6	Electrical System	Lateral Tilt	High Error	Sensor voltage above 4.5 V. Check for wiring damage. Adjust and re-calibrate or replace sensor if necessary.
104	521027	8	Electrical System	Lateral Tilt	Vref Error	Reference voltage error. Check sensor wiring for damage.
104	521030	3	Electrical System	Left Float Cyl.	Low Alarm	Sensor voltage below 0.5 V. Check sensor power supply. Adjust and re-calibrate or replace sensor if necessary.
104	521030	4	Electrical System	Left Float Cyl.	High Alarm	Sensor voltage above 4.5 V. Check for wiring damage. Adjust and re-calibrate or replace sensor if necessary.
104	521030	5	Electrical System	Left Float Cyl.	Low Error	Sensor voltage below 0.5 V. Check sensor power supply. Adjust and re-calibrate or replace sensor if necessary.
104	521030	6	Electrical System	Left Float Cyl.	High Error	Sensor voltage above 4.5 V. Check for wiring damage. Adjust and re-calibrate or replace sensor if necessary.

Fault Codes			Telltale	Short Description	Full Fault Description	Recommended Fix/Check Message
SA	SPN	FMI				
104	521030	8	Electrical System	Left Float Cyl.	Vref Error	Reference voltage error. Check sensor wiring for damage.
104	521033	3	Electrical System	Converyor Pressure	Low Alarm	Sensor voltage below 0.5 V. Check sensor power supply and replace sensor as necessary. Ensure that DWA option (in Attachments menu) is checked off only if it is in fact installed.
104	521033	4	Electrical System	Conveyor Pressure	High Alarm	Sensor voltage above 4.5 V. Check for wiring damage and replace sensor as necessary. Ensure that DWA option (in Attachments menu) is checked off only if it is in fact installed.
104	521033	5	Electrical System	Conveyor Pressure	Low Error	Sensor voltage below 0.5 V. Check sensor power supply and replace sensor as necessary. Ensure that DWA option (in Attachments menu) is checked off only if it is in fact installed.
104	521033	6	Electrical System	Conveyor Pressure	High Error	Sensor voltage above 4.5 V. Check for wiring damage and replace sensor as necessary. Ensure that DWA option (in Attachments menu) is checked off only if it is in fact installed.
104	521033	8	Electrical System	Conveyor Pressure	Vref Error	Reference voltage error. Check sensor wiring for damage. Ensure that DWA option (in Attachments menu) is checked off only if it is in fact installed.
104	521036	3	Electrical System	Right Float Cyl.	Low Alarm	Sensor voltage below 0.5 V. Check sensor power supply. Adjust and re-calibrate or replace sensor if necessary.
104	521036	4	Electrical System	Right Float Cyl.	High Alarm	Sensor voltage above 4.5 V. Check for wiring damage. Adjust and re-calibrate or replace sensor if necessary.
104	521036	5	Electrical System	Right Float Cyl.	Low Error	Sensor voltage below 0.5 V. Check sensor power supply. Adjust and re-calibrate or replace sensor if necessary.
104	521036	6	Electrical System	Right Float Cyl.	High Error	Sensor voltage above 4.5 V. Check for wiring damage. Adjust and re-calibrate or replace sensor if necessary.

Fault Codes			Telltale	Short Description	Full Fault Description	Recommended Fix/Check Message
SA	SPN	FMI				
104	521036	8	Electrical System	Right Float Cyl.	Vref Error	Reference voltage error. Check sensor wiring for damage.
104	521039	3	Electrical System	Knife Pressure	Low Alarm	Sensor voltage below 0.5 V. Check sensor power supply and replace sensor as necessary.
104	521039	4	Electrical System	Knife Pressure	High Alarm	Sensor voltage above 4.5 V. Check for wiring damage and replace sensor as necessary.
104	521039	5	Electrical System	Knife Pressure	Low Error	Sensor voltage below 0.5 V. Check sensor power supply and replace sensor as necessary.
104	521039	6	Electrical System	Knife Pressure	High Error	Sensor voltage above 4.5 V. Check for wiring damage and replace sensor as necessary.
104	521039	8	Electrical System	Knife Pressure	Vref Error	Reference voltage error. Check sensor wiring for damage.
104	521042	3	Electrical System	Reel Pressure	Low Alarm	Sensor voltage below 0.5 V. Check sensor power supply. Adjust and re-calibrate or Replace sensor if necessary.
104	521042	4	Electrical System	Reel Pressure	High Alarm	Sensor voltage above 4.5 V. Check for wiring damage. Adjust and re-calibrate or Replace sensor if necessary.
104	521042	5	Electrical System	Reel Pressure	Low Error	Sensor voltage below 0.5 V. Check sensor power supply. Adjust and re-calibrate or Replace sensor if necessary.
104	521042	6	Electrical System	Reel Pressure	High Error	Sensor voltage above 4.5 V. Check for wiring damage. Adjust and re-calibrate or Replace sensor if necessary.
104	521042	8	Electrical System	Reel Pressure	Vref Error	Reference voltage error. Check sensor wiring for damage.
104	521045	3	Electrical System	Header Tilt	Low Alarm	Sensor voltage below 0.5 V. Check sensor power supply. Adjust and re-calibrate or Replace sensor if necessary.
104	521045	4	Electrical System	Header Tilt	High Alarm	Sensor voltage above 4.5 V. Check for wiring damage. Adjust and re-calibrate or Replace sensor if necessary.

Fault Codes			Telltale	Short Description	Full Fault Description	Recommended Fix/Check Message
SA	SPN	FMI				
104	521045	5	Electrical System	Header Tilt	Low Error	Sensor voltage below 0.5 V. Check sensor power supply. Adjust and re-calibrate or replace sensor if necessary.
104	521045	6	Electrical System	Header Tilt	High Error	Sensor voltage above 4.5 V. Check for wiring damage. Adjust and re-calibrate or replace sensor if necessary.
104	521045	8	Electrical System	Header Tilt	Vref Error	Reference voltage error. Check sensor wiring for damage.
104	521048	3	Electrical System	Header Height	Low Alarm	Sensor voltage below 0.5 V. Check sensor power supply. Adjust and re-calibrate or replace sensor if necessary.
104	521048	4	Electrical System	Header Height	High Alarm	Sensor voltage above 4.5 V. Check for wiring damage. Adjust and re-calibrate or replace sensor if necessary.
104	521048	5	Electrical System	Header Height	Low Error	Sensor voltage below 0.5 V. Check sensor power supply. Adjust and re-calibrate or replace sensor if necessary.
104	521048	6	Electrical System	Header Height	High Error	Sensor voltage above 4.5 V. Check for wiring damage. Adjust and re-calibrate or replace sensor if necessary.
104	521048	8	Electrical System	Header Height	Vref Error	Reference voltage error. Check sensor wiring for damage.
104	521051	3	Electrical System	Charge Pressure	Low Alarm	Sensor voltage below 0.5 V. Check sensor power supply and replace sensor as necessary.
104	521051	4	Electrical System	Charge Pressure	High Alarm	Sensor voltage above 4.5 V. Check for wiring damage and replace sensor as necessary.
104	521051	5	Electrical System	Charge Pressure	Low Error	Sensor voltage below 0.5 V. Check sensor power supply and replace sensor as necessary.
104	521051	6	Electrical System	Charge Pressure	High Error	Sensor voltage above 4.5 V. Check for wiring damage and replace sensor as necessary.
104	521051	8	Electrical System	Charge Pressure	Vref Error	Reference voltage error. Check sensor wiring for damage.

Fault Codes			Telltale	Short Description	Full Fault Description	Recommended Fix/Check Message
SA	SPN	FMI				
104	521362	19	Electrical System	Cab Fwd Stop Lt Snsr	CAN Error	Contact Dealer.
104	521059	19	Electrical System	Cooler Box Door	CAN Error	Contact Dealer.
104	521060	19	Electrical System	Seat Cab Fwd	CAN Error	Contact Dealer.
104	521061	19	Electrical System	Seat Engine Fwd	CAN Error	Contact Dealer.
104	521062	19	Electrical System	Interlock Closed	CAN Error	Contact Dealer.
104	521063	19	Electrical System	Oil Level Signal	CAN Error	Contact Dealer.
104	521063	1	Windrower	Oil Level Low	Low Hydraulic Oil Level	Low Hydraulic Oil Level, or oil level switch failed or open wiring circuit. Shut off engine and check oil level. Check sensor wiring and replace sensor if necessary.
104	521064	19	Electrical System	Hyd Filter Ind	CAN Error	Contact Dealer.
104	521065	19	Electrical System	DWA Position Switch	CAN Error	Contact Dealer.
104	521066	19	Electrical System	Header ID1	CAN Error	Contact Dealer.
104	521067	19	Electrical System	Header ID2	CAN Error	Contact Dealer.
104	521068	19	Electrical System	Header ID3	CAN Error	Contact Dealer.
104	521069	19	Electrical System	Header ID4	CAN Error	Contact Dealer.
104	521070	19	Electrical System	Header ID5	CAN Error	Contact Dealer.
104	521071	2	Electrical System	Left Wheel Motor	Low Alarm	Sensor voltage below 0.5 V. Check sensor power supply and replace sensor as necessary.

Fault Codes			Telltale	Short Description	Full Fault Description	Recommended Fix/Check Message
SA	SPN	FMI				
104	521071	3	Electrical System	Left Wheel Motor	High Alarm	Sensor voltage above 4.5 V. Check for wiring damage and replace sensor as necessary.
104	521072	2	Electrical System	Right Wheel Motor	Low Alarm	Sensor voltage below 0.5 V. Check sensor power supply and replace sensor as necessary.
104	521072	3	Electrical System	Right Wheel Motor	High Alarm	Sensor voltage above 4.5 V. Check for wiring damage and replace sensor as necessary.
104	521460	1	Windrower	Wheel Speed	Left Wheel Speed Sensor	Check left wheel speed sensor and wiring. Reading speed off Right wheel only. Auto-reel and auto-draper speed performance will be impacted while turning.
104	521460	2	Windrower	Wheel Speed	Right Wheel Speed Sensor	Check right wheel speed sensor and wiring. Reading speed off left wheel only. Auto-reel and auto-draper speed performance will be impacted while turning.
104	521460	3	Windrower	Wheel Speed	Left & Right Wheel Speed Sensor	Check right and left wheel speed sensors and wiring. Acre tracking, auto-reel and auto-draper speed features will be disabled.
104	521073	2	Electrical System	Knife/Disc Speed	Low Alarm	Sensor voltage below 0.5 V. Check sensor power supply. Check sensor adjustment and replace if necessary.
104	521073	3	Electrical System	Knife/Disc Speed	High Alarm	Sensor voltage above 4.5 V. Check for wiring damage. Check sensor adjustment and replace if necessary.
104	521073	31	Electrical System	Knife/Disc Speed	Condition Exists	No knife/disc speed feedback. Estimated speed will be used, This will exclude knife/disc speed changes when selecting buttons A, B and C on ground speed lever.
104	521390	0	Windrower	Knife Speed	Above Norm Most Severe	Knife speed above max allowable for header type. Contact Dealer.
104	521074	2	Electrical System	Reel Speed	Low Alarm	Sensor voltage below 0.5 V. Check sensor power supply. Check sensor adjustment and replace if necessary.

Fault Codes			Telltale	Short Description	Full Fault Description	Recommended Fix/Check Message
SA	SPN	FMI				
104	521074	3	Electrical System	Reel Speed	High Alarm	Sensor voltage above 4.5 V. Check for wiring damage. Check sensor adjustment and replace if necessary.
104	521074	31	Electrical System	Reel Speed	Condition Exists	No reel speed feedback. This will exclude reel speed changes when selecting buttons A, B and C on ground speed lever. It will also disable the auto-reel speed feature.
104	521075	2	Electrical System	Cooling Fan Spd	Low Alarm	Sensor voltage below 0.5 V. Check sensor power supply. Check sensor adjustment and replace if necessary.
104	521075	3	Electrical System	Cooling Fan Spd	High Alarm	Sensor voltage above 4.5 V. Check for wiring damage. Check sensor adjustment and replace if necessary.
104	521391	0	Windrower	Cooling Fan Spd High	Above Norm Most Severe	Fan speed readout high. Safe mode activated. Fan will default to full rpm at high idle. Contact Dealer.
104	521391	31	Windrower	Cooling Fan Speed	Condition Exists	No cooling fan speed feedback.
104	521391	1	Windrower	Cooling Fan Spd Low	Below Normal Most Severe	Control system is unable to adjust fan speed. Beware that there is the potential for engine overheat if fan speed is too low. Safe mode activated. Fan will default to full rpm at high idle. Contact dealer.
104	521076	2	Electrical System	Left Draper Idler Spd	Low Alarm	Sensor voltage below 0.5 V. Check sensor power supply. Check sensor adjustment and replace if necessary. If a double draper drive kit is installed, select it from the Settings > Header > Attachments menu.
104	521076	3	Electrical System	Left Draper Idler Spd	High Alarm	Sensor voltage above 4.5 V. Check for wiring damage. Check sensor adjustment and replace if necessary.
104	521076	31	Electrical System	Left Draper Idler Spd	Condition Exists	No draper slip feedback. Draper slip detection is no longer active. If a double draper drive kit is installed, select it from the Settings > Header > Attachments menu.

Fault Codes			Telltale	Short Description	Full Fault Description	Recommended Fix/Check Message
SA	SPN	FMI				
104	521077	2	Electrical System	Right Draper Idler Spd	Low Alarm	Sensor voltage below 0.5 V. Check sensor power supply. Check sensor adjustment and replace if necessary. If a double draper drive kit is installed, select it from the Settings > Header > Attachments menu.
104	521077	3	Electrical System	Right Draper Idler Spd	High Alarm	Sensor voltage above 4.5 V. Check for wiring damage. Check sensor adjustment and replace if necessary.
104	521077	31	Electrical System	Right Draper Idler Spd	Condition Exists	No draper slip feedback. Draper slip detection is no longer active. If a double draper drive kit is installed, select it from the Settings > Header > Attachments menu.
104	521078	4	Electrical System	Knife Drive	Open Load	Check wiring for damage or breaks. Contact Dealer.
104	521078	3	Electrical System	Knife Drive	Overload	High current on circuit. Check wiring for damage. Contact Dealer.
104	521078	2	Electrical System	Knife Drive	Saturated	Check current output channel on Master Controller.
104	521079	4	Electrical System	Left Wheel Motor	Open Load	Check wiring for damage or breaks. Contact Dealer.
104	521079	3	Electrical System	Left Wheel Motor	Overload	High current on circuit. Check wiring for damage. Contact Dealer.
104	521079	2	Electrical System	Left Wheel Motor	Saturated	Check current output channel on Master Controller.
104	521080	4	Electrical System	Right Wheel Motor	Open Load	Check wiring for damage or breaks. Contact Dealer.
104	521080	3	Electrical System	Right Wheel Motor	Overload	High current on circuit. Check wiring for damage. Contact Dealer.
104	521080	2	Electrical System	Right Wheel Motor	Saturated	Check current output channel on Master Controller.
104	521081	4	Electrical System	Cooling Fan Speed	Open Load	Check wiring for damage or breaks. Contact Dealer.

Fault Codes			Telltale	Short Description	Full Fault Description	Recommended Fix/Check Message
SA	SPN	FMI				
104	521081	3	Electrical System	Cooling Fan Speed	Overload	High current on circuit. Check wiring for damage. Contact Dealer.
104	521081	2	Electrical System	Cooling Fan Speed	Saturated	Check current output channel on Master Controller.
104	521082	4	Electrical System	Header Raise/Lower	Open Load	Check wiring for damage or breaks. Contact Dealer.
104	521082	5	Electrical System	Header Raise/Lower	Overload	High current on circuit. Check wiring for damage. Contact Dealer.
104	521083	4	Electrical System	Header Tilt	Open Load	Check circuit for damage. Contact Dealer.
104	521083	5	Electrical System	Header Tilt	Overload	Check circuit for damage. Contact Dealer.
104	521085	4	Electrical System	Reel Drive PWM	Open Load	Check circuit for damage. Contact Dealer.
104	521085	5	Electrical System	Reel Drive PWM	Overload	Check circuit for damage. Contact Dealer.
104	521086	4	Electrical System	Conveyor Drive PWM	Open Load	Check wiring for damage or breaks. Contact Dealer.
104	521086	5	Electrical System	Conveyor Drive PWM	Overload	High current on circuit. Check wiring for damage. Contact Dealer.
104	521357	3	Electrical System	Interlock Open	Open Load	Check wiring for damage or breaks. Contact Dealer.
104	521357	4	Electrical System	Interlock Open	Overload	High current on circuit. Check wiring for damage. Contact Dealer.
104	521359	3	Electrical System	Brake Release	Open Load	Check wiring for damage or breaks. Contact Dealer.
104	521359	4	Electrical System	Brake Release	Overload	High current on circuit. Check wiring for damage. Contact Dealer.
104	521361	3	Electrical System	Batt. Disc. Open	Open Load	Check wiring for damage or breaks. Contact Dealer.
104	521361	4	Electrical System	Batt. Disc. Open	Overload	High current on circuit. Check wiring for damage. Contact Dealer.

Fault Codes			Telltale	Short Description	Full Fault Description	Recommended Fix/Check Message
SA	SPN	FMI				
104	521364	3	Electrical System	Ignition	Open Load	Check wiring for damage or breaks. Contact Dealer.
104	521364	4	Electrical System	Ignition	Overload	High current on circuit. Check wiring for damage. Contact Dealer.
104	521366	3	Electrical System	Starter Relay	Open Load	Check wiring for damage or breaks. Contact Dealer.
104	521366	4	Electrical System	Starter Relay	Overload	High current on circuit. Check wiring for damage. Contact Dealer.
104	521368	3	Electrical System	12 V Sensor Pwr	Firewall 12 V Sensor Power - Open Load	Check wiring for damage or breaks. The following sensors may be affected: hydraulic oil temperature, hydraulic oil level, cooling fan speed, cab forward or engine-forward seat position, or hydraulic oil filter.Contact Dealer.
104	521368	4	Electrical System	12 V Sensor Pwr	Firewall 12 V Sensor Power - Overload	High current on circuit. Check wiring for damage. The following sensors may be affected: hydraulic oil temperature, hydraulic oil level, cooling fan speed, cab forward or engine-forward seat position, or hydraulic oil filter.Contact Dealer.
104	521369	3	Electrical System	Cooling Fan Reverse	Open Load	Check wiring for damage or breaks. Contact Dealer.
104	521369	4	Electrical System	Cooling Fan Reverse	Overload	High current on circuit. Check wiring for damage. Contact Dealer.
104	521370	3	Electrical System	Reel/Aux Lift Selector	Open Load	Check wiring for damage or breaks. Contact Dealer.
104	521370	4	Electrical System	Reel/Aux Lift Selector	Overload	High current on circuit. Check wiring for damage. Contact Dealer.
104	521371	3	Electrical System	Reel Retract O/P	Open Load	Check wiring for damage or breaks. Contact Dealer.
104	521371	4	Electrical System	Reel Retract O/P	Overload	High current on circuit. Check wiring for damage. Contact Dealer.
104	521372	3	Electrical System	Reel Extend O/P	Open Load	Check wiring for damage or breaks. Contact Dealer.

Fault Codes			Telltale	Short Description	Full Fault Description	Recommended Fix/Check Message
SA	SPN	FMI				
104	521372	4	Electrical System	Reel Extend O/P	Overload	High current on circuit. Check wiring for damage. Contact Dealer.
104	521373	3	Electrical System	Reel Raise O/P	Open Load	Check wiring for damage or breaks. Contact Dealer.
104	521373	4	Electrical System	Reel Raise O/P	Overload	High current on circuit. Check wiring for damage. Contact Dealer.
104	521374	3	Electrical System	Reel Lower O/P	Open Load	Check wiring for damage or breaks. Contact Dealer.
104	521374	4	Electrical System	Reel Lower O/P	Overload	High current on circuit. Check wiring for damage. Contact Dealer.
104	521375	3	Electrical System	12 V Sensor Pwr	Chassis 12 V Sensor Power - Open Load	Check wiring for damage or breaks. The following sensors may be affected: DWA Position, header tilt position, swath former position. Contact Dealer.
104	521375	4	Electrical System	12 V Sensor Pwr	Chassis 12 V Sensor Power - Overload	High current on circuit. Check wiring for damage. The following sensors may be affected: DWA Position, header tilt position, swath former position. Contact Dealer.
104	521376	3	Electrical System	Deck Shift Left O/P	Open Load	Check wiring for damage or breaks. Contact Dealer.
104	521376	4	Electrical System	Deck Shift Left O/P	Overload	High current on circuit. Check wiring for damage. Contact Dealer.
104	521377	3	Electrical System	Deck Shift Right O/P	Open Load	Check wiring for damage or breaks. Contact Dealer.
104	521377	4	Electrical System	Deck Shift Right O/P	Overload	High current on circuit. Check wiring for damage. Contact Dealer.
104	521378	3	Electrical System	Left Lateral Tilt O/P	Open Load	Check wiring for damage or breaks. Contact Dealer.
104	521378	4	Electrical System	Left Lateral Tilt O/P	Overload	High current on circuit. Check wiring for damage. Contact Dealer.
104	521379	3	Electrical System	Right Lateral Tilt O/P	Open Load	Check wiring for damage or breaks. Contact Dealer.

Fault Codes			Telltale	Short Description	Full Fault Description	Recommended Fix/Check Message
SA	SPN	FMI				
104	521379	4	Electrical System	Right Lateral Tilt O/P	Overload	High current on circuit. Check wiring for damage. Contact Dealer.
104	521380	3	Electrical System	Right Float Adjust O/P	Open Load	Check wiring for damage or breaks. Contact Dealer.
104	521380	4	Electrical System	Right Float Adjust O/P	Overload	High current on circuit. Check wiring for damage. Contact Dealer.
104	521381	3	Electrical System	Left Float Adjust O/P	Open Load	Check wiring for damage or breaks. Contact Dealer.
104	521381	4	Electrical System	Left Float Adjust O/P	Overload	High current on circuit. Check wiring for damage. Contact Dealer.
104	521087	2	Electrical System	Master Controller	Disabled	Contact Dealer.
104	521087	3	Electrical System	Master Controller	High Temperature	Module has exceeded max operating temperature. Allow module to cool down before continuing operation.
104	521087	4	Electrical System	Master Controller	Low Batt Voltage	Battery voltage is low, check charging system. Contact Dealer.
104	521087	5	Electrical System	Master Controller	High Batt Voltage	Battery voltage is high. Contact Dealer.
104	521087	7	Electrical System	Master Controller	Vref Error	Reference voltage error. Check wiring for damage. The following sensors may be affected: Left Hand Wheel Speed Right Hand Wheel Speed Fuel Level Ground Speed Lever Position
104	521087	10	Electrical System	Master Controller	MultiAddress	Check address wiring.
104	521087	8	Electrical System	Master Controller	Address Error	CAN Address Error. Contact Dealer.
104	521092	1	Electrical System	Ext. Module, Firewall	Disabled	Contact Dealer.
104	521092	2	Electrical System	Ext. Module, Firewall	High Temperature	Module has exceeded max operating temperature. Allow module to cool down before continuing operation.

Fault Codes			Telltale	Short Description	Full Fault Description	Recommended Fix/Check Message
SA	SPN	FMI				
104	521092	3	Electrical System	Ext. Module, Firewall	Low Batt Voltage	Battery voltage is low, check charging system. Contact Dealer.
104	521092	4	Electrical System	Ext. Module, Firewall	High Batt Voltage	Battery voltage is high. Contact Dealer.
104	521092	6	Electrical System	Ext. Module, Firewall	Address Error	CAN Address Error. Contact Dealer.
104	521092	7	Electrical System	Ext. Module, Firewall	Vref error	Reference voltage error. Check wiring for damage.
104	521097	1	Electrical System	Ext. Module, Chassis	Disabled	Contact Dealer.
104	521097	2	Electrical System	Ext. Module, Chassis	High Temperature	Module has exceeded max operating temperature. Allow module to cool down before continuing operation.
104	521097	3	Electrical System	Ext. Module, Chassis	Low Batt Voltage	Battery voltage is low, check charging system. Contact Dealer .
104	521097	4	Electrical System	Ext. Module, Chassis	High Batt Voltage	Battery voltage is high. Contact Dealer.
104	521097	6	Electrical System	Ext. Module, Chassis	Address Error	CAN Address Error. Contact Dealer.
104	521097	7	Electrical System	Ext. Module, Chassis	Vref error	Reference voltage error. Check wiring for damage.
104	521501	3	Electrical System	Swath Compressor	Low Alarm	Sensor voltage below 0.5 V. Check sensor power supply. Adjust and re-calibrate or replace sensor if necessary.
104	521501	4	Electrical System	Swath Compressor	High Alarm	Sensor voltage above 4.5 V. Check for wiring damage. Adjust and re-calibrate or replace sensor if necessary.
104	521501	5	Electrical System	Swath Compressor	Low Error	Sensor voltage below 0.5 V. Check sensor power supply. Adjust and re-calibrate or replace sensor if necessary.
104	521501	6	Electrical System	Swath Compressor	High Error	Sensor voltage above 4.5 V. Check for wiring damage. Adjust and re-calibrate or replace sensor if necessary.

Fault Codes			Telltale	Short Description	Full Fault Description	Recommended Fix/Check Message
SA	SPN	FMI				
104	521501	8	Electrical System	Swath Compressor	Vref Error	Reference voltage error. Check sensor wiring for damage.
104	521502	3	Electrical System	AHHC Left-out Sensor	Low Alarm	Sensor voltage below 0.5 V. Check sensor power supply. Adjust and re-calibrate or replace sensor if necessary.
104	521502	4	Electrical System	AHHC Left-out Sensor	High Alarm	Sensor voltage above 4.5 V. Check for wiring damage. Adjust and re-calibrate or replace sensor if necessary.
104	521502	5	Electrical System	AHHC Left-out Sensor	Low Error	Sensor voltage below 0.5 V. Check sensor power supply. Adjust and re-calibrate or replace sensor if necessary.
104	521502	6	Electrical System	AHHC Left-out Sensor	High Error	Sensor voltage above 4.5 V. Check for wiring damage. Adjust and re-calibrate or replace sensor if necessary.
104	521502	8	Electrical System	AHHC Left-out Sensor	Vref Error	Reference voltage error. Check sensor wiring for damage.
104	521503	3	Electrical System	AHHC Left-in Sensor	Low Alarm	Sensor voltage below 0.5 V. Check sensor power supply. Adjust and re-calibrate or replace sensor if necessary.
104	521503	4	Electrical System	AHHC Left-in Sensor	High Alarm	Sensor voltage above 4.5 V. Check for wiring damage. Adjust and re-calibrate or replace sensor if necessary.
104	521503	5	Electrical System	AHHC Left-in Sensor	Low Error	Sensor voltage below 0.5 V. Check sensor power supply. Adjust and re-calibrate or replace sensor if necessary.
104	521503	6	Electrical System	AHHC Left-in Sensor	High Error	Sensor voltage above 4.5 V. Check for wiring damage. Adjust and re-calibrate or replace sensor if necessary.
104	521503	8	Electrical System	AHHC Left-in Sensor	Vref Error	Reference voltage error. Check sensor wiring for damage.
104	521504	3	Electrical System	AHHC Right-in Sensor	Low Alarm	Sensor voltage below 0.5 V. Check sensor power supply. Adjust and re-calibrate or replace sensor if necessary.

Fault Codes			Telltale	Short Description	Full Fault Description	Recommended Fix/Check Message
SA	SPN	FMI				
104	521504	4	Electrical System	AHHC Right-in Sensor	High Alarm	Sensor voltage above 4.5 V. Check for wiring damage. Adjust and re-calibrate or replace sensor if necessary.
104	521504	5	Electrical System	AHHC Right-in Sensor	Low Error	Sensor voltage below 0.5 V. Check sensor power supply. Adjust and re-calibrate or replace sensor if necessary.
104	521504	6	Electrical System	AHHC Right-in Sensor	High Error	Sensor voltage above 4.5 V. Check for wiring damage. Adjust and re-calibrate or replace sensor if necessary.
104	521504	8	Electrical System	AHHC Right-in Sensor	Vref Error	Reference voltage error. Check sensor wiring for damage.
104	521505	3	Electrical System	AHHC Right-out Sensor	Low Alarm	Sensor voltage below 0.5 V. Check sensor power supply. Adjust and re-calibrate or replace sensor if necessary.
104	521505	4	Electrical System	AHHC Right-out Sensor	High Alarm	Sensor voltage above 4.5 V. Check for wiring damage. Adjust and re-calibrate or replace sensor if necessary.
104	521505	5	Electrical System	AHHC Right-out Sensor	Low Error	Sensor voltage below 0.5 V. Check sensor power supply. Adjust and re-calibrate or replace sensor if necessary.
104	521505	6	Electrical System	AHHC Right-out Sensor	High Error	Sensor voltage above 4.5 V. Check for wiring damage. Adjust and re-calibrate or replace sensor if necessary.
104	521505	8	Electrical System	AHHC Right-out Sensor	Vref Error	Reference voltage error. Check sensor wiring for damage.
104	521506	2	Electrical System	VREF XC10 Firewall	CAN Error	Contact Dealer The following sensors may be affected: knife speed, reel speed, left or right draper speed, header identification, reel height position, reel fore-aft position, and hydraulic oil temperature.

Fault Codes			Telltale	Short Description	Full Fault Description	Recommended Fix/Check Message
SA	SPN	FMI				
104	521506	3	Electrical System	VREF XC10 Firewall	Open Load	Check wiring for damage or breaks. The following sensors may be affected: knife speed, reel speed, left or right draper speed, header identification, reel height position, reel fore-aft position, and hydraulic oil temperature.Contact Dealer.
104	521506	4	Electrical System	VREF XC10 Firewall	Overload	High current on circuit. Check wiring for damage. The following sensors may be affected: knife speed, reel speed, left or right draper speed, header identification, reel height position, reel fore-aft position, and hydraulic oil temperature. Contact Dealer.
104	521507	2	Electrical System	VREF XC10 Chassis	CAN Error	Contact Dealer The following sensors may be affected: knife pressure, reel pressure, draper pressure, supercharge pressure, left and right float position, header height position, header tilt position, and swath former position.
104	521507	3	Electrical System	VREF XC10 Chassis	Open Load	Check wiring for damage or breaks. The following sensors may be affected: knife pressure, reel pressure, draper pressure, supercharge pressure, left and right float position, header height position, header tilt position, and swath former position.Contact Dealer.
104	521507	4	Electrical System	VREF XC10 Chassis	Overload	High current on circuit. Check wiring for damage. The following sensors may be affected: knife pressure, reel pressure, draper pressure, supercharge pressure, left and right float position, header height position, header tilt position, and swath former position.Contact Dealer.
104	521508	1	Windrower	Lift/Fan Hyd Unstable	Instability Detected	If condition persists, contact dealer. Continued operation may lead to machine damage.
104	521509	19	Electrical System	Gearbox Oil Level Signal	CAN Error - Gearbox Oil Low Level Sensor	Contact Dealer.

Fault Codes			Telltale	Short Description	Full Fault Description	Recommended Fix/Check Message
SA	SPN	FMI				
104	521509	1	Windrower	Gearbox Oil Level Low	Low Gearbox Oil Level	Low Gearbox Oil Level, or oil level switch failed or open wiring circuit. Shut off engine and check oil level. Check sensor wiring and replace sensor if necessary.
104	521510	19	Electrical System	Gearbox Oil Level Signal	CAN Error - Gearbox Oil High Level Sensor	Contact Dealer.
104	521510	1	Windrower	Gearbox Oil Level High	High Gearbox Oil Level	High Gearbox Oil Level, or oil level switch failed. Shut off engine and check oil level. Check sensor wiring and replace sensor if necessary.
176	521104	1	Electrical System	Front Work Lights	EK1 Relay coil open or not present	Check chassis relay module.
176	521104	2	Electrical System	Front Work Lights	EK1 Relay Coil shorted or failed relay driver	Check chassis relay module.
176	521104	3	Electrical System	Front Work Lights	EK1 Relay Normally Open contact is open	Check chassis relay module.
176	521104	4	Electrical System	Front Work Lights	EK1 Relay Normally Closed contact is open	Check chassis relay module.
176	521104	5	Electrical System	Front Work Lights	EK1 Relay coil is not receiving power	Check wiring to chassis relay module EK1. Contact Dealer.
176	521104	6	Electrical System	Front Work Lights	EK1 Relay Normally open contact is shorted	Check chassis relay module.
176	521104	7	Electrical System	Front Work Lights	EK1 Relay Normally closed contact is shorted	Check chassis relay module.
176	521111	1	Electrical System	Low Beam Light Cab Fwd	EK2 Relay coil open or not present	Check chassis relay module.
176	521111	2	Electrical System	Low Beam Light Cab Fwd	EK2 Relay Coil shorted or failed relay driver	Check chassis relay module.
176	521111	3	Electrical System	Low Beam Light Cab Fwd	EK2 Relay Normally Open contact is open	Check chassis relay module.
176	521111	4	Electrical System	Low Beam Light Cab Fwd	EK2 Relay Normally Closed contact is open	Check chassis relay module.

Fault Codes			Telltale	Short Description	Full Fault Description	Recommended Fix/Check Message
SA	SPN	FMI				
176	521111	5	Electrical System	Low Beam Light Cab Fwd	EK2 Relay coil is not receiving power	Check wiring to chassis relay module EK2. Contact Dealer.
176	521111	6	Electrical System	Low Beam Light Cab Fwd	EK2 Relay Normally open contact is shorted	Check chassis relay module.
176	521111	7	Electrical System	Low Beam Light Cab Fwd	EK2 Relay Normally closed contact is shorted	Check chassis relay module.
176	521119	1	Electrical System	Tail Lights Engine Fwd	EK3 Relay coil open or not present	Check chassis relay module.
176	521119	2	Electrical System	Tail Lights Engine Fwd	EK3 Relay Coil shorted or failed relay driver	Check chassis relay module.
176	521119	3	Electrical System	Tail Lights Engine Fwd	EK3 Relay Normally Open contact is open	Check chassis relay module.
176	521119	4	Electrical System	Tail Lights Engine Fwd	EK3 Relay Normally Closed contact is open	Check chassis relay module.
176	521119	5	Electrical System	Tail Lights Engine Fwd	EK3 Relay coil is not receiving power	Check wiring to chassis relay module EK3. Contact Dealer.
176	521119	6	Electrical System	Tail Lights Engine Fwd	EK3 Relay Normally open contact is shorted	Check chassis relay module.
176	521119	7	Electrical System	Tail Lights Engine Fwd	EK3 Relay Normally closed contact is shorted	Check chassis relay module.
176	521127	1	Electrical System	Corner Lights, Cab Fwd	EK4 Relay coil open or not present	Check chassis relay module.
176	521127	2	Electrical System	Corner Lights, Cab Fwd	EK4 Relay Coil shorted or failed relay driver	Check chassis relay module.
176	521127	3	Electrical System	Corner Lights, Cab Fwd	EK4 Relay Normally Open contact is open	Check chassis relay module.
176	521127	4	Electrical System	Corner Lights, Cab Fwd	EK4 Relay Normally Closed contact is open	Check chassis relay module.
176	521127	5	Electrical System	Corner Lights, Cab Fwd	EK4 Relay coil is not receiving power	Check wiring to chassis relay module EK4. Contact Dealer.
176	521127	6	Electrical System	Corner Lights, Cab Fwd	EK4 Relay Normally open contact is shorted	Check chassis relay module.

Fault Codes			Telltale	Short Description	Full Fault Description	Recommended Fix/Check Message
SA	SPN	FMI				
176	521127	7	Electrical System	Corner Lights, Cab Fwd	EK4 Relay Normally closed contact is shorted	Check chassis relay module.
176	521135	1	Electrical System	Rear Roof Work Lights	EK5 Relay coil open or not present	Check chassis relay module.
176	521135	2	Electrical System	Rear Roof Work Lights	EK5 Relay Coil shorted or failed relay driver	Check chassis relay module.
176	521135	3	Electrical System	Rear Roof Work Lights	EK5 Relay Normally Open contact is open	Check chassis relay module.
176	521135	4	Electrical System	Rear Roof Work Lights	EK5 Relay Normally Closed contact is open	Check chassis relay module.
176	521135	5	Electrical System	Rear Roof Work Lights	EK5 Relay coil is not receiving power	Check wiring to chassis relay module EK5. Contact Dealer.
176	521135	6	Electrical System	Rear Roof Work Lights	EK5 Relay Normally open contact is shorted	Check chassis relay module.
176	521135	7	Electrical System	Rear Roof Work Lights	EK5 Relay Normally closed contact is shorted	Check chassis relay module.
176	521143	1	Electrical System	High Beam Lights CF	EK6 Relay coil open or not present	Check chassis relay module.
176	521143	2	Electrical System	High Beam Lights CF	EK6 Relay Coil shorted or failed relay driver	Check chassis relay module.
176	521143	3	Electrical System	High Beam Lights CF	EK6 Relay Normally Open contact is open	Check chassis relay module.
176	521143	4	Electrical System	High Beam Lights CF	EK6 Relay Normally Closed contact is open	Check chassis relay module.
176	521143	5	Electrical System	High Beam Lights CF	EK6 Relay coil is not receiving power	Check wiring to chassis relay module EK6. Contact Dealer.
176	521143	6	Electrical System	High Beam Lights CF	EK6 Relay Normally open contact is shorted	Check chassis relay module.
176	521143	7	Electrical System	High Beam Lights CF	EK6 Relay Normally closed contact is shorted	Check chassis relay module.
176	521151	1	Electrical System	Brake Lights, Eng Fwd	EK7 Relay coil open or not present	Check chassis relay module.

Fault Codes			Telltale	Short Description	Full Fault Description	Recommended Fix/Check Message
SA	SPN	FMI				
176	521151	2	Electrical System	Brake Lights, Eng Fwd	EK7 Relay Coil shorted or failed relay driver	Check chassis relay module.
176	521151	3	Electrical System	Brake Lights, Eng Fwd	EK7 Relay Normally Open contact is open	Check chassis relay module.
176	521151	4	Electrical System	Brake Lights, Eng Fwd	EK7 Relay Normally Closed contact is open	Check chassis relay module.
176	521151	5	Electrical System	Brake Lights, Eng Fwd	EK7 Relay coil is not receiving power	Check wiring to chassis relay module EK7. Contact Dealer.
176	521151	6	Electrical System	Brake Lights, Eng Fwd	EK7 Relay Normally open contact is shorted	Check chassis relay module.
176	521151	7	Electrical System	Brake Lights, Eng Fwd	EK7 Relay Normally closed contact is shorted	Check chassis relay module.
176	521159	1	Electrical System	Cab Swath Lights, Roof	EK8 Relay coil open or not present	Check chassis relay module.
176	521159	2	Electrical System	Cab Swath Lights, Roof	EK8 Relay Coil shorted or failed relay driver	Check chassis relay module.
176	521159	3	Electrical System	Cab Swath Lights, Roof	EK8 Relay Normally Open contact is open	Check chassis relay module.
176	521159	4	Electrical System	Cab Swath Lights, Roof	EK8 Relay Normally Closed contact is open	Check chassis relay module.
176	521159	5	Electrical System	Cab Swath Lights, Roof	EK8 Relay coil is not receiving power	Check wiring to chassis relay module EK8. Contact Dealer.
176	521159	6	Electrical System	Cab Swath Lights, Roof	EK8 Relay Normally open contact is shorted	Check chassis relay module.
176	521159	7	Electrical System	Cab Swath Lights, Roof	EK8 Relay Normally closed contact is shorted	Check chassis relay module.
176	521167	1	Electrical System	Beacon Lights	EK9 Relay coil open or not present	Check chassis relay module.
176	521167	2	Electrical System	Beacon Lights	EK9 Relay Coil shorted or failed relay driver	Check chassis relay module.
176	521167	3	Electrical System	Beacon Lights	EK9 Relay Normally Open contact is open	Check chassis relay module.

Fault Codes			Telltale	Short Description	Full Fault Description	Recommended Fix/Check Message
SA	SPN	FMI				
176	521167	4	Electrical System	Beacon Lights	EK9 Relay Normally Closed contact is open	Check chassis relay module.
176	521167	5	Electrical System	Beacon Lights	EK9 Relay coil is not receiving power	Check wiring to chassis relay module EK9. Contact Dealer.
176	521167	6	Electrical System	Beacon Lights	EK9 Relay Normally open contact is shorted	Check chassis relay module.
176	521167	7	Electrical System	Beacon Lights	EK9 Relay Normally closed contact is shorted	Check chassis relay module.
176	521175	1	Electrical System	Dome Light, Cab	EK10 Relay coil open or not present	Check chassis relay module.
176	521175	2	Electrical System	Dome Light, Cab	EK10 Relay Coil shorted or failed relay driver	Check chassis relay module.
176	521175	3	Electrical System	Dome Light, Cab	EK10 Relay Normally Open contact is open	Check chassis relay module.
176	521175	4	Electrical System	Dome Light, Cab	EK10 Relay Normally Closed contact is open	Check chassis relay module.
176	521175	5	Electrical System	Dome Light, Cab	EK10 Relay coil is not receiving power	Check wiring to chassis relay module EK10. Contact Dealer.
176	521175	6	Electrical System	Dome Light, Cab	EK10 Relay Normally open contact is shorted	Check chassis relay module.
176	521175	7	Electrical System	Dome Light, Cab	EK10 Relay Normally closed contact is shorted	Check chassis relay module.
176	521185	1	Electrical System	Inner work lights	EC1 Circuit Breaker Blown	Check roof relay module.
176	521185	2	Electrical System	Inner work lights	EC1 Circuit Breaker Not Powered	Check wiring to roof relay module EC1 circuit breaker. Contact Dealer.
176	521185	3	Electrical System	Inner work lights	EC1 Circuit Breaker Not Used	Contact Dealer.
176	521288	1	Electrical System	Outer work lights	EC2 Circuit Breaker Blown	Check roof relay module.
176	521288	2	Electrical System	Outer work lights	EC2 Circuit Breaker Not Powered	Check wiring to roof relay module EC2 circuit breaker. Contact dealer.

Fault Codes			Telltale	Short Description	Full Fault Description	Recommended Fix/Check Message
SA	SPN	FMI				
176	521288	3	Electrical System	Outer work lights	EC2 Circuit Breaker Not Used	Contact Dealer.
176	521291	1	Electrical System	Brake Lights, Eng Fwd	EC3 Circuit Breaker Blown	Check roof relay module.
176	521291	2	Electrical System	Brake Lights, Eng Fwd	EC3 Circuit Breaker Not Powered	Check wiring to roof relay module EC3 circuit breaker. Contact Dealer.
176	521291	3	Electrical System	Brake Lights, Eng Fwd	EC3 Circuit Breaker Not Used	Contact Dealer.
176	521294	1	Electrical System	Low Beam Light Cab Fwd	EC4 Circuit Breaker Blown	Check roof relay module.
176	521294	2	Electrical System	Low Beam Light Cab Fwd	EC4 Circuit Breaker Not Powered	Check wiring to roof relay module EC4 circuit breaker. Contact Dealer.
176	521294	3	Electrical System	Low Beam Light Cab Fwd	EC4 Circuit Breaker Not Used	Contact Dealer.
176	521297	1	Electrical System	Cab Swath Lights, Roof	EC5 Circuit Breaker Blown	Check roof relay module.
176	521297	2	Electrical System	Cab Swath Lights, Roof	EC5 Circuit Breaker Not Powered	Check wiring to roof relay module EC5 circuit breaker. Contact Dealer.
176	521297	3	Electrical System	Cab Swath Lights, Roof	EC5 Circuit Breaker Not Used	Contact Dealer.
176	521300	1	Electrical System	High Beam Lights CF	EC6 Circuit Breaker Blown	Check roof relay module.
176	521300	2	Electrical System	High Beam Lights CF	EC6 Circuit Breaker Not Powered	Check wiring to roof relay module EC6 circuit breaker. Contact Dealer.
176	521300	3	Electrical System	High Beam Lights CF	EC6 Circuit Breaker Not Used	Contact Dealer.
176	521303	1	Electrical System	Tail Lights Engine Fwd	EC7 Circuit Breaker Blown	Check roof relay module.
176	521303	2	Electrical System	Tail Lights Engine Fwd	EC7 Circuit Breaker Not Powered	Check wiring to roof relay module EC7 circuit breaker. Contact Dealer.
176	521303	3	Electrical System	Tail Lights Engine Fwd	EC7 Circuit Breaker Not Used	Contact Dealer.

Fault Codes			Telltale	Short Description	Full Fault Description	Recommended Fix/Check Message
SA	SPN	FMI				
176	521306	1	Electrical System	Rear Roof Work Lights	EC8 Circuit Breaker Blown	Check roof relay module.
176	521306	2	Electrical System	Rear Roof Work Lights	EC8 Circuit Breaker Not Powered	Check wiring to roof relay module EC8 circuit breaker. Contact Dealer.
176	521306	3	Electrical System	Rear Roof Work Lights	EC8 Circuit Breaker Not Used	Contact Dealer
176	521309	1	Electrical System	Beacon Lights	EC9 Circuit Breaker Blown	Check roof relay module.
176	521309	2	Electrical System	Beacon Lights	EC9 Circuit Breaker Not Powered	Check wiring to roof relay module EC9 circuit breaker. Contact Dealer.
176	521309	3	Electrical System	Beacon Lights	EC9 Circuit Breaker Not Used	Contact Dealer
176	521312	1	Electrical System	Dome Light, Cab	EC10 Circuit Breaker Blown	Check roof relay module.
176	521312	2	Electrical System	Dome Light, Cab	EC10 Circuit Breaker Not Powered	Check wiring to roof relay module EC10 circuit breaker. Contact Dealer.
176	521312	3	Electrical System	Dome Light, Cab	EC10 Circuit Breaker Not Used	Contact Dealer.
176	521474	1	Electrical System	Roof Relay Module	Error - Module, Roof mVEC	Contact Dealer.
176	521475	1	Electrical System	Roof Relay Module	Error - Module, Roof mVEC	Contact Dealer.
176	521476	1	Electrical System	Roof Relay Module	Error - Module, Roof mVEC	Contact Dealer.
176	521477	1	Electrical System	Roof Relay Module	Error - Module, Roof mVEC	Contact Dealer.
176	521478	1	Electrical System	Roof Relay Module	Error - Module, Roof mVEC	Contact Dealer.
176	521479	1	Electrical System	Roof Relay Module	Error - Module, Roof mVEC	Contact Dealer.
176	521480	1	Electrical System	Roof Relay Module	Error - Module, Roof mVEC	Contact Dealer.

Fault Codes			Telltale	Short Description	Full Fault Description	Recommended Fix/Check Message
SA	SPN	FMI				
176	521481	1	Electrical System	Roof Relay Module	Error - Module, Roof mVEC	Contact Dealer.
176	521482	1	Electrical System	Roof Relay Module	Error - Module, Roof mVEC	Contact Dealer.
176	521483	1	Electrical System	Roof Relay Module	Error - Module, Roof mVEC	Contact Dealer.
176	521484	1	Electrical System	Roof Relay Module	Error - Module, Roof mVEC	Contact Dealer.
176	521485	1	Electrical System	Roof Relay Module	Error - Module, Roof mVEC	Contact Dealer.
176	521486	1	Electrical System	Roof Relay Module	Error - Module, Roof mVEC	Contact Dealer.
178	521186	1	Electrical System	Brake Lights, Cab Fwd	BK1 Relay coil open or not present	Check chassis module for missing replay. Replace relay.
178	521186	2	Electrical System	Brake Lights, Cab Fwd	BK1 Relay Coil shorted or failed relay driver	Replace relay.
178	521186	3	Electrical System	Brake Lights, Cab Fwd	BK1 Relay Normally Open contact is open	Replace relay.
178	521186	4	Electrical System	Brake Lights, Cab Fwd	BK1 Relay Normally Closed contact is open	Replace relay.
178	521186	5	Electrical System	Brake Lights, Cab Fwd	BK1 Relay coil is not receiving power	Contact Dealer.
178	521186	6	Electrical System	Brake Lights, Cab Fwd	BK1 Relay Normally open contact is shorted	Replace relay.
178	521186	7	Electrical System	Brake Lights, Cab Fwd	BK1 Relay Normally closed contact is shorted	Replace relay.
178	521194	1	Electrical System	High Beam, Engine Fwd	BK2 Relay coil open or not present	Check chassis module for missing replay. Replace relay.
178	521194	2	Electrical System	High Beam, Engine Fwd	BK2 Relay Coil shorted or failed relay driver	Replace relay.
178	521194	3	Electrical System	High Beam, Engine Fwd	BK2 Relay Normally Open contact is open	Replace relay.

Fault Codes			Telltale	Short Description	Full Fault Description	Recommended Fix/Check Message
SA	SPN	FMI				
178	521194	4	Electrical System	High Beam, Engine Fwd	BK2 Relay Normally Closed contact is open	Replace relay.
178	521194	5	Electrical System	High Beam, Engine Fwd	BK2 Relay coil is not receiving power	Contact Dealer.
178	521194	6	Electrical System	High Beam, Engine Fwd	BK2 Relay Normally open contact is shorted	Replace relay.
178	521194	7	Electrical System	High Beam, Engine Fwd	BK2 Relay Normally closed contact is shorted	Replace relay.
178	521226	1	Electrical System	Right Turn Signal	BK3 Relay coil open or not present	Check chassis module for missing replay. Replace relay.
178	521226	2	Electrical System	Right Turn Signal	BK3 Relay Coil shorted or failed relay driver	Replace relay.
178	521226	3	Electrical System	Right Turn Signal	BK3 Relay Normally Open contact is open	Replace relay.
178	521226	4	Electrical System	Right Turn Signal	BK3 Relay Normally Closed contact is open	Replace relay.
178	521226	5	Electrical System	Right Turn Signal	BK3 Relay coil is not receiving power	Contact Dealer.
178	521226	6	Electrical System	Right Turn Signal	BK3 Relay Normally open contact is shorted	Replace relay.
178	521226	7	Electrical System	Right Turn Signal	BK3 Relay Normally closed contact is shorted	Replace relay.
178	521210	1	Electrical System	Low Beam Lights, EF	BK5 Relay coil open or not present	Check chassis module for missing replay. Replace relay.
178	521210	2	Electrical System	Low Beam Lights, EF	BK5 Relay Coil shorted or failed relay driver	Replace relay.
178	521210	3	Electrical System	Low Beam Lights, EF	BK5 Relay Normally Open contact is open	Replace relay.
178	521210	4	Electrical System	Low Beam Lights, EF	BK5 Relay Normally Closed contact is open	Replace relay.
178	521210	5	Electrical System	Low Beam Lights, EF	BK5 Relay coil is not receiving power	Contact Dealer.

Fault Codes			Telltale	Short Description	Full Fault Description	Recommended Fix/Check Message
SA	SPN	FMI				
178	521210	6	Electrical System	Low Beam Lights, EF	BK5 Relay Normally open contact is shorted	Replace relay.
178	521210	7	Electrical System	Low Beam Lights, EF	BK5 Relay Normally closed contact is shorted	Replace relay.
178	521218	1	Electrical System	Left Turn Signal	BK6 Relay coil open or not present	Check chassis module for missing replay. Replace relay.
178	521218	2	Electrical System	Left Turn Signal	BK6 Relay Coil shorted or failed relay driver	Replace relay.
178	521218	3	Electrical System	Left Turn Signal	BK6 Relay Normally Open contact is open	Replace relay.
178	521218	4	Electrical System	Left Turn Signal	BK6 Relay Normally Closed contact is open	Replace relay.
178	521218	5	Electrical System	Left Turn Signal	BK6 Relay coil is not receiving power	Contact Dealer.
178	521218	6	Electrical System	Left Turn Signal	BK6 Relay Normally open contact is shorted	Replace relay.
178	521218	7	Electrical System	Left Turn Signal	BK6 Relay Normally closed contact is shorted	Replace relay.
178	521202	1	Electrical System	Wiper, Cab Fwd	BK7 Relay coil open or not present	Check chassis module for missing replay. Replace relay.
178	521202	2	Electrical System	Wiper, Cab Fwd	BK7 Relay Coil shorted or failed relay driver	Replace relay.
178	521202	3	Electrical System	Wiper, Cab Fwd	BK7 Relay Normally Open contact is open	Replace relay.
178	521202	4	Electrical System	Wiper, Cab Fwd	BK7 Relay Normally Closed contact is open	Replace relay.
178	521202	5	Electrical System	Wiper, Cab Fwd	BK7 Relay coil is not receiving power	Contact Dealer.
178	521202	6	Electrical System	Wiper, Cab Fwd	BK7 Relay Normally open contact is shorted	Replace relay.
178	521202	7	Electrical System	Wiper, Cab Fwd	BK7 Relay Normally closed contact is shorted	Replace relay.

Fault Codes			Telltale	Short Description	Full Fault Description	Recommended Fix/Check Message
SA	SPN	FMI				
178	521234	1	Electrical System	Hydraulic Selector 1/2	BK9 Relay coil open or not present	Check chassis module for missing replay. Replace relay.
178	521234	2	Electrical System	Hydraulic Selector 1/2	BK9 Relay Coil shorted or failed relay driver	Replace relay.
178	521234	3	Electrical System	Hydraulic Selector 1/2	BK9 Relay Normally Open contact is open	Replace relay.
178	521234	4	Electrical System	Hydraulic Selector 1/2	BK9 Relay Normally Closed contact is open	Replace relay.
178	521234	5	Electrical System	Hydraulic Selector 1/2	BK9 Relay coil is not receiving power	Contact Dealer.
178	521234	6	Electrical System	Hydraulic Selector 1/2	BK9 Relay Normally open contact is shorted	Replace relay.
178	521234	7	Electrical System	Hydraulic Selector 1/2	BK9 Relay Normally closed contact is shorted	Replace relay.
178	521242	1	Electrical System	Wiper, Engine Fwd	BK8 Relay coil open or not present	Check chassis module for missing replay. Replace relay.
178	521242	2	Electrical System	Wiper, Engine Fwd	BK8 Relay Coil shorted or failed relay driver	Replace relay.
178	521242	3	Electrical System	Wiper, Engine Fwd	BK8 Relay Normally Open contact is open	Replace relay.
178	521242	4	Electrical System	Wiper, Engine Fwd	BK8 Relay Normally Closed contact is open	Replace relay.
178	521242	5	Electrical System	Wiper, Engine Fwd	BK8 Relay coil is not receiving power	Contact Dealer.
178	521242	6	Electrical System	Wiper, Engine Fwd	BK8 Relay Normally open contact is shorted	Replace relay.
178	521242	7	Electrical System	Wiper, Engine Fwd	BK8 Relay Normally closed contact is shorted	Replace relay.
178	521250	1	Electrical System	Tail Lights, Cab Fwd	BK4 Relay coil open or not present	Check chassis module for missing replay. Replace relay.
178	521250	2	Electrical System	Tail Lights, Cab Fwd	BK4 Relay Coil shorted or failed relay driver	Replace relay.

Fault Codes			Telltale	Short Description	Full Fault Description	Recommended Fix/Check Message
SA	SPN	FMI				
178	521250	3	Electrical System	Tail Lights, Cab Fwd	BK4 Relay Normally Open contact is open	Replace relay.
178	521250	4	Electrical System	Tail Lights, Cab Fwd	BK4 Relay Normally Closed contact is open	Replace relay.
178	521250	5	Electrical System	Tail Lights, Cab Fwd	BK4 Relay coil is not receiving power	Contact Dealer.
178	521250	6	Electrical System	Tail Lights, Cab Fwd	BK4 Relay Normally open contact is shorted	Replace relay.
178	521250	7	Electrical System	Tail Lights, Cab Fwd	BK4 Relay Normally closed contact is shorted	Replace relay.
178	521266	1	Electrical System	Header swath lights	BK11 Relay coil open or not present	Check chassis module for missing replay. Replace relay.
178	521266	2	Electrical System	Header swath lights	BK11 Relay Coil shorted or failed relay driver	Replace relay.
178	521266	3	Electrical System	Header swath lights	BK11 Relay Normally Open contact is open	Replace relay.
178	521266	4	Electrical System	Header swath lights	BK11 Relay Normally Closed contact is open	Replace relay.
178	521266	5	Electrical System	Header swath lights	BK11 Relay coil is not receiving power	Contact Dealer.
178	521266	6	Electrical System	Header swath lights	BK11 Relay Normally open contact is shorted	Replace relay.
178	521266	7	Electrical System	Header swath lights	BK11 Relay Normally closed contact is shorted	Replace relay.
178	521274	1	Electrical System	Windshield washer	BK12 Relay coil open or not present	Check chassis module for missing replay. Replace relay.
178	521274	2	Electrical System	Windshield washer	BK12 Relay Coil shorted or failed relay driver	Replace relay.
178	521274	3	Electrical System	Windshield washer	BK12 Relay Normally Open contact is open	Replace relay.
178	521274	4	Electrical System	Windshield washer	BK12 Relay Normally Closed contact is open	Replace relay.

Fault Codes			Telltale	Short Description	Full Fault Description	Recommended Fix/Check Message
SA	SPN	FMI				
178	521274	5	Electrical System	Windshield washer	BK12 Relay coil is not receiving power	Contact Dealer.
178	521274	6	Electrical System	Windshield washer	BK12 Relay Normally open contact is shorted	Replace relay.
178	521274	7	Electrical System	Windshield washer	BK12 Relay Normally closed contact is shorted	Replace relay.
178	521315	1	Electrical System	Brake Lights, Cab Fwd	BF1 Fuse Blown	Replace blown fuse in chassis relay module.
178	521315	2	Electrical System	Brake Lights, Cab Fwd	BF1 Fuse Not Powered	Contact Dealer.
178	521315	3	Electrical System	Brake Lights, Cab Fwd	BF1 Fuse Not Used	Install fuse in chassis relay module.
178	521318	1	Electrical System	Tail Lights, Cab Fwd	BF2 Fuse Blown	Replace blown fuse in chassis relay module.
178	521318	2	Electrical System	Tail Lights, Cab Fwd	BF2 Fuse Not Powered	Contact Dealer.
178	521318	3	Electrical System	Tail Lights, Cab Fwd	BF2 Fuse Not Used	Install fuse in chassis relay module.
178	521321	1	Electrical System	Wiper, Cab Fwd	BF3 Fuse Blown	Replace blown fuse in chassis relay module.
178	521321	2	Electrical System	Wiper, Cab Fwd	BF3 Fuse Not Powered	Contact Dealer.
178	521321	3	Electrical System	Wiper, Cab Fwd	BF3 Fuse Not Used	Install fuse in chassis relay module.
178	521324	1	Electrical System	High Beam Lights, EF	BF4 Fuse Blown	Replace blown fuse in chassis relay module.
178	521324	2	Electrical System	High Beam Lights, EF	BF4 Fuse Not Powered	Contact Dealer.
178	521324	3	Electrical System	High Beam Lights, EF	BF4 Fuse Not Used	Install fuse in chassis relay module.
178	521327	1	Electrical System	Wiper, EF	BF5 Fuse Blown	Replace blown fuse in chassis relay module.

Fault Codes			Telltale	Short Description	Full Fault Description	Recommended Fix/Check Message
SA	SPN	FMI				
178	521327	2	Electrical System	Wiper, EF	BF5 Fuse Not Powered	Contact Dealer.
178	521327	3	Electrical System	Wiper, EF	BF5 Fuse Not Used	Install fuse in chassis relay module.
178	521330	1	Electrical System	Left Turn Signal	BF6 Fuse Blown	Replace blown fuse in chassis relay module.
178	521330	2	Electrical System	Left Turn Signal	BF6 Fuse Not Powered	Contact Dealer.
178	521330	3	Electrical System	Left Turn Signal	BF6 Fuse Not Used	Install fuse in chassis relay module.
178	521333	1	Electrical System	Right Turn Signal	BF7 Fuse Blown	Replace blown fuse in chassis relay module.
178	521333	2	Electrical System	Right Turn Signal	BF7 Fuse Not Powered	Contact Dealer.
178	521333	3	Electrical System	Right Turn Signal	BF7 Fuse Not Used	Install fuse in chassis relay module.
178	521336	1	Electrical System	Low Beam Lights, EF	BF8 Fuse Blown	Replace blown fuse in chassis relay module.
178	521336	2	Electrical System	Low Beam Lights, EF	BF8 Fuse Not Powered	Contact Dealer.
178	521336	3	Electrical System	Low Beam Lights, EF	BF8 Fuse Not Used	Install fuse in chassis relay module.
178	521461	1	Electrical System	Chassis Relay Module	Error - Module, Chassis Relay	Contact Dealer.
178	521462	1	Electrical System	Chassis Relay Module	Error - Module, Chassis Relay	Contact Dealer.
178	521463	1	Electrical System	Chassis Relay Module	Error - Module, Chassis Relay	Contact Dealer.
178	521464	1	Electrical System	Chassis Relay Module	Error - Module, Chassis Relay	Contact Dealer.
178	521465	1	Electrical System	Chassis Relay Module	Error - Module, Chassis Relay	Contact Dealer.

Fault Codes			Telltale	Short Description	Full Fault Description	Recommended Fix/Check Message
SA	SPN	FMI				
178	521466	1	Electrical System	Chassis Relay Module	Error - Module, Chassis Relay	Contact Dealer.
178	521467	1	Electrical System	Chassis Relay Module	Error - Module, Chassis Relay	Contact Dealer.
178	521468	1	Electrical System	Chassis Relay Module	Error - Module, Chassis Relay	Contact Dealer.
178	521469	1	Electrical System	Chassis Relay Module	Error - Module, Chassis Relay	Contact Dealer.
178	521470	1	Electrical System	Chassis Relay Module	Error - Module, Chassis Relay	Contact Dealer.
178	521471	1	Electrical System	Chassis Relay Module	Error - Module, Chassis Relay	Contact Dealer.
178	521472	1	Electrical System	Chassis Relay Module	Error - Module, Chassis Relay	Contact Dealer.
178	521473	1	Electrical System	Chassis Relay Module	Error - Module, Chassis Relay	Contact Dealer.
190	524101	12	Electrical System	Console ROM CRC failed	Power up ROM CRC check failed	Contact Dealer.
190	524102	12	Electrical System	Console memory failed	Power up memory test failed	Contact Dealer.
190	524103	12	Electrical System	Console EEPROM read	Error reading the boot block EEPROM block	Contact Dealer.
190	444	1	Electrical System	Console 12 V Low	The +12 V input is below the minimum operation voltage	Contact Dealer.
190	1043	2	Electrical System	Console 2.5 V Low	Failure of the 2.5 V A/D converter reference voltage.	Check console wiring for damage. Contact Dealer.
190	3509	2	Electrical System	Console 5 V Low	The 5 V internal voltage has fallen below 4.5 V.	Check console wiring for damage. Contact Dealer.
190	524260	13	Electrical System	Console EEPROM write	Error writing value to the console EEPROM.	Contact Dealer.
190	524262	13	Electrical System	Console primary CRC	Parameter primary table CRC failure.	Contact Dealer.

Fault Codes			Telltale	Short Description	Full Fault Description	Recommended Fix/Check Message
SA	SPN	FMI				
190	524263	13	Electrical System	Console redundant CRC	Parameter redundant table CRC failure.	Contact Dealer.
190	524264	13	Electrical System	Console config reading	Error reading a configuration parameter.	Contact Dealer.
190	2662	3	Electrical System	Throttle Voltage High	Throttle input has a voltage too high.	Check console wiring for damage. Contact Dealer.
190	2662	4	Electrical System	Throttle Voltage Low	Throttle input has a voltage too low	Check console wiring for damage. Contact Dealer.
190	2662	14	Electrical System	Console throttle input	Throttle inputs failed the plausibility check.	Contact Dealer.
190	2662	13	Electrical System	Console throttle > 0	The throttle was out of neutral when powering up.	Contact Dealer.
190	524129	31	Electrical System	GSL Handle Offline	Communications lost with the GSL Handle.	Contact Dealer.
190	524130	31	Electrical System	GSL Button Stuck	There is a stuck button on the handle at power up.	Check GSL switches for failure or binding. Contact Dealer.
190	524131	31	Electrical System	Console Button Stuck	There is a stuck button on the console at power up.	Check console switches for failure or binding. Contact Dealer.
190	524117	31	Electrical System	Console button reading	There was an error reading the serial data for the console buttons.	Contact Dealer.
190	524118	31	Electrical System	Console button low	The LOW state test for control panel buttons 4-8 & HeaderReverse failed.	Includes deck shift, DWA up/down and header reverse buttons. Contact Dealer.
190	524119	31	Electrical System	Console button high	The HIGH state test for control panel buttons 4-8 & HeaderReverse failed	Includes deck shift, DWA up/down and header reverse buttons. Contact Dealer.
190	524221	31	Electrical System	GSL button low state	A handle button failed its LOW state check.	Contact Dealer.
190	524222	31	Electrical System	GSL button high state	A handle button failed its HIGH state check.	Contact Dealer.

Fault Codes			Telltale	Short Description	Full Fault Description	Recommended Fix/Check Message
SA	SPN	FMI				
190	524223	31	Electrical System	GSL scroll encoder	There was a serial data transfer error with the scroll wheel encoders.	Contact Dealer.
190	524224	31	Electrical System	GSL scroll data	The scroll wheel data was read, but there was an error reading a portion of data.	Contact Dealer.
190	524225	31	Electrical System	GSL scroll SPI read	There was a SPI transfer failure while reading the scroll wheel encoders.	Contact Dealer.
190	524265	6	Electrical System	Horn Current High	The horn output is drawing more than 6A.	Contact Dealer.
190	524266	6	Electrical System	Console on-relay >2.5A	The battery on-relay coil is drawing more than 2.5A	Contact Dealer.
190	524267	6	Electrical System	Console off-relay>2.5A	The battery off relay coil is drawing more than 2.5A	Contact Dealer.
190	521392	3	Electrical System	Left Turn Signal	Switch Error	Check switch for damage or binding. Contact Dealer.
190	521392	4	Electrical System	Left Turn Signal	CAN Error	Contact Dealer.
190	521393	3	Electrical System	Right Turn Signal	Switch Error	Check switch for damage or binding. Contact Dealer.
190	521393	4	Electrical System	Right Turn Signal	CAN Error	Contact Dealer.
190	521394	3	Electrical System	Hazard	Switch Error	Check switch for damage or binding. Contact Dealer.
190	521394	4	Electrical System	Hazard	CAN Error	Contact Dealer.
190	521395	3	Electrical System	DWA/Swath Roller Up	Switch Error	Check switch for damage or binding. Contact Dealer.
190	521395	4	Electrical System	DWA/Swath Roller Up	CAN Error	Contact Dealer.

Fault Codes			Telltale	Short Description	Full Fault Description	Recommended Fix/Check Message
SA	SPN	FMI				
190	521396	3	Electrical System	DWA/Swath Roller Dn	Switch Error	Check switch for damage or binding. Contact Dealer.
190	521396	4	Electrical System	DWA/Swath Roller Dn	CAN Error	Contact Dealer.
190	521397	3	Electrical System	Deck Shift Right	Switch Error	Check switch for damage or binding. Contact Dealer.
190	521397	4	Electrical System	Deck Shift Right	CAN Error	Contact Dealer.
190	521398	3	Electrical System	Deck Shift Center	Switch Error	Check switch for damage or binding. Contact Dealer.
190	521398	4	Electrical System	Deck Shift Center	CAN Error	Contact Dealer.
190	521399	3	Electrical System	Deck Shift Left	Switch Error	Check switch for damage or binding. Contact Dealer.
190	521399	4	Electrical System	Deck Shift Left	CAN Error	Contact Dealer.
190	521400	3	Electrical System	Draper Speed Decrease	Switch Error	Check switch for damage or binding. Contact Dealer.
190	521400	4	Electrical System	Draper Speed Decrease	CAN Error	Contact Dealer.
190	521401	3	Electrical System	Draper Speed Increase	Switch Error	Check switch for damage or binding. Contact Dealer.
190	521401	4	Electrical System	Draper Speed Increase	CAN Error	Contact Dealer.
190	521402	3	Electrical System	Road Lights	Switch Error	Check switch for damage or binding. Contact Dealer.
190	521402	4	Electrical System	Road Lights	CAN Error	Contact Dealer.
190	521403	3	Electrical System	High Beam	Switch Error	Check switch for damage or binding. Contact Dealer.
190	521403	4	Electrical System	High Beam	CAN Error	Contact Dealer.

Fault Codes			Telltale	Short Description	Full Fault Description	Recommended Fix/Check Message
SA	SPN	FMI				
190	521404	3	Electrical System	F1 Button	Switch Error	Check switch for damage or binding. Contact Dealer.
190	521404	4	Electrical System	F1 Button	CAN Error	Contact Dealer.
190	521405	3	Electrical System	Beacons	Switch Error	Check switch for damage or binding. Contact Dealer.
190	521405	4	Electrical System	Beacons	CAN Error	Contact Dealer.
190	521406	3	Electrical System	Clearance Lights	Switch Error	Check switch for damage or binding. Contact Dealer.
190	521406	4	Electrical System	Clearance Lights	CAN Error	Contact Dealer.
190	521407	3	Electrical System	Wiper EF	Switch Error	Check switch for damage or binding. Contact Dealer.
190	521407	4	Electrical System	Wiper EF	CAN Error	Contact Dealer.
190	521408	3	Electrical System	Washer	Switch Error	Check switch for damage or binding. Contact Dealer.
190	521408	4	Electrical System	Washer	CAN Error	Contact Dealer.
190	521409	3	Electrical System	Wiper CF	Switch Error	Check switch for damage or binding. Contact Dealer.
190	521409	4	Electrical System	Wiper CF	CAN Error	Contact Dealer.
190	521410	3	Electrical System	Field Lights	Switch Error	Check switch for damage or binding. Contact Dealer.
190	521410	4	Electrical System	Field Lights	CAN Error	Contact Dealer.
190	521411	3	Electrical System	F2 Button	Switch Error	Check switch for damage or binding. Contact Dealer.
190	521411	4	Electrical System	F2 Button	CAN Error	Contact Dealer.

Fault Codes			Telltale	Short Description	Full Fault Description	Recommended Fix/Check Message
SA	SPN	FMI				
190	521412	3	Electrical System	AC Fan Spd Decrease	Switch Error	Check switch for damage or binding. Contact Dealer.
190	521412	4	Electrical System	AC Fan Spd Decrease	CAN Error	Contact Dealer.
190	521413	3	Electrical System	AC Fan Spd Increase	Switch Error	Check switch for damage or binding. Contact Dealer.
190	521413	4	Electrical System	AC Fan Spd Increase	CAN Error	Contact Dealer.
190	521414	3	Electrical System	AC Recirc	Switch Error	Check switch for damage or binding. Contact Dealer.
190	521414	4	Electrical System	AC Recirc	CAN Error	Contact Dealer.
190	521415	3	Electrical System	F3 Button	Switch Error	Check switch for damage or binding. Contact Dealer.
190	521415	4	Electrical System	F3 Button	CAN Error	Contact Dealer.
190	521416	3	Electrical System	F4 Button	Switch Error	Check switch for damage or binding. Contact Dealer.
190	521416	4	Electrical System	F4 Button	CAN Error	Contact Dealer.
190	521417	3	Electrical System	AC On/Off	Switch Error	Check switch for damage or binding. Contact Dealer.
190	521417	4	Electrical System	AC On/Off	CAN Error	Contact Dealer.
190	521418	3	Electrical System	AC Defrost	Switch Error	Check switch for damage or binding. Contact Dealer.
190	521418	4	Electrical System	AC Defrost	CAN Error	Contact Dealer.
190	521419	3	Electrical System	AC Auto Fan Spd	Switch Error	Check switch for damage or binding. Contact Dealer.
190	521419	4	Electrical System	AC Auto Fan Spd	CAN Error	Contact Dealer.

Fault Codes			Telltale	Short Description	Full Fault Description	Recommended Fix/Check Message
SA	SPN	FMI				
190	521420	3	Electrical System	AC Cold	Switch Error	Check switch for damage or binding. Contact Dealer.
190	521420	4	Electrical System	AC Cold	CAN Error	Contact Dealer.
190	521421	3	Electrical System	AC Hot	Switch Error	Check switch for damage or binding. Contact Dealer.
190	521421	4	Electrical System	AC Hot	CAN Error	Contact Dealer.
190	521422	3	Electrical System	Horn	Switch Error	Check switch for damage or binding. Contact Dealer.
190	521422	4	Electrical System	Horn	CAN Error	Contact Dealer.
190	521423	3	Electrical System	EEC Button	Switch Error	Check switch for damage or binding. Contact Dealer.
190	521423	4	Electrical System	EEC Button	CAN Error	Contact Dealer.
190	521424	3	Electrical System	F5 Button	Switch Error	Check switch for damage or binding. Contact Dealer.
190	521424	4	Electrical System	F5 Button	CAN Error	Contact Dealer.
190	521425	3	Electrical System	F6 Button	Switch Error	Check switch for damage or binding. Contact Dealer.
190	521425	4	Electrical System	F6 Button	CAN Error	Contact Dealer.
190	521426	3	Electrical System	Header Stop NC	Switch Error	Check switch for damage or binding. Contact Dealer.
190	521426	4	Electrical System	Header Stop NC	CAN Error	Contact Dealer.
190	521427	3	Electrical System	Header Reverse	Switch Error	Check switch for damage or binding. Contact Dealer.
190	521427	4	Electrical System	Header Reverse	CAN Error	Contact Dealer.

Fault Codes			Telltale	Short Description	Full Fault Description	Recommended Fix/Check Message
SA	SPN	FMI				
190	521429	3	Electrical System	Operator Present	Switch Error	Check switch for damage or binding. Contact Dealer.
190	521429	4	Electrical System	Operator Present	CAN Error	Contact Dealer.
190	521433	3	Electrical System	Door Switches	Switch Error	Check switch for damage or binding. Contact Dealer.
190	521433	4	Electrical System	Door Switches	CAN Error	Contact Dealer.
190	521434	3	Electrical System	Throttle	Switch Error	Check switch for damage or binding. Contact Dealer.
190	521434	4	Electrical System	Throttle	CAN Error	Contact Dealer.
190	521435	3	Electrical System	Batt Disc. Close	Switch Error	Check switch for damage or binding. Contact Dealer.
190	521435	4	Electrical System	Batt Disc. Close	CAN Error	Contact Dealer.
190	521436	3	Electrical System	Horn	Switch Error	Check switch for damage or binding. Contact Dealer.
190	521436	4	Electrical System	Horn	CAN Error	Contact Dealer.
190	521438	3	Electrical System	AutoSteer Engage	Switch Error	Check switch for damage or binding. Contact Dealer.
190	521438	4	Electrical System	AutoSteer Engage	CAN Error	Contact Dealer.
190	521439	3	Electrical System	A Button	Switch Error	Check switch for damage or binding. Contact Dealer.
190	521439	4	Electrical System	A Button	CAN Error	Contact Dealer.
190	521440	3	Electrical System	B Button	Switch Error	Check switch for damage or binding. Contact Dealer.
190	521440	4	Electrical System	B Button	CAN Error	Contact Dealer.

Fault Codes			Telltale	Short Description	Full Fault Description	Recommended Fix/Check Message
SA	SPN	FMI				
190	521441	3	Electrical System	C Button	Switch Error	Check switch for damage or binding. Contact Dealer.
190	521441	4	Electrical System	C Button	CAN Error	Contact Dealer.
190	521442	3	Electrical System	Select	Switch Error	Check switch for damage or binding. Contact Dealer.
190	521442	4	Electrical System	Select	CAN Error	Contact Dealer.
190	521443	3	Electrical System	Escape	Switch Error	Check switch for damage or binding. Contact Dealer.
190	521443	4	Electrical System	Escape	CAN Error	Contact Dealer.
190	521444	3	Electrical System	Autosteer	Switch Error	Check switch for damage or binding. Contact Dealer.
190	521444	4	Electrical System	Autosteer	CAN Error	Contact Dealer.
190	521445	3	Electrical System	Tilt Extend	Switch Error	Check switch for damage or binding. Contact Dealer.
190	521445	4	Electrical System	Tilt Extend	CAN Error	Contact Dealer.
190	521446	3	Electrical System	Tilt Retract	Switch Error	Check switch for damage or binding. Contact Dealer.
190	521446	4	Electrical System	Tilt Retract	CAN Error	Contact Dealer.
190	521447	3	Electrical System	Header Raise 1	Switch Error	Check switch for damage or binding. Contact Dealer.
190	521447	4	Electrical System	Header Raise 1	CAN Error	Contact Dealer.
190	521448	3	Electrical System	Header Raise 2	Switch Error	Check switch for damage or binding. Contact Dealer.
190	521448	4	Electrical System	Header Raise 2	CAN Error	Contact Dealer.

Fault Codes			Telltale	Short Description	Full Fault Description	Recommended Fix/Check Message
SA	SPN	FMI				
190	521449	3	Electrical System	Header Lower 1	Switch Error	Check switch for damage or binding. Contact Dealer.
190	521449	4	Electrical System	Header Lower 1	CAN Error	Contact Dealer.
190	521450	3	Electrical System	Header Lower 2	Switch Error	Check switch for damage or binding. Contact Dealer.
190	521450	4	Electrical System	Header Lower 2	CAN Error	Contact Dealer.
190	521430	3	Electrical System	Keyswitch - Ignition	Switch Error	Check switch for damage or binding. Contact Dealer.
190	521430	4	Electrical System	Keyswitch - Ignition	CAN Error	Contact Dealer.
190	521431	3	Electrical System	Keyswitch - Accessory	Switch Error	Check switch for damage or binding. Contact Dealer.
190	521431	4	Electrical System	Keyswitch - Accessory	CAN Error	Contact Dealer.
190	521432	3	Electrical System	Keyswitch - Crank	Switch Error	Check switch for damage or binding. Contact Dealer.
190	521432	4	Electrical System	Keyswitch - Crank	CAN Error	Contact Dealer.
190	521451	3	Electrical System	Reel/Knf Spd -	Switch Error	Check switch for damage or binding. Contact Dealer.
190	521451	4	Electrical System	Reel/Knf Spd -	CAN Error	Contact Dealer.
190	521452	3	Electrical System	Reel/Knf Spd +	Switch Error	Check switch for damage or binding. Contact Dealer.
190	521452	4	Electrical System	Reel/Knf Spd +	CAN Error	Contact Dealer.
190	521453	3	Electrical System	Reel Fore	Switch Error	Check switch for damage or binding. Contact Dealer.
190	521453	4	Electrical System	Reel Fore	CAN Error	Contact Dealer.

Fault Codes			Telltale	Short Description	Full Fault Description	Recommended Fix/Check Message
SA	SPN	FMI				
190	521454	3	Electrical System	Reel Aft	Switch Error	Check switch for damage or binding. Contact Dealer.
190	521454	4	Electrical System	Reel Aft	CAN Error	Contact Dealer.
190	521455	3	Electrical System	Reel Raise	Switch Error	Check switch for damage or binding. Contact Dealer.
190	521455	4	Electrical System	Reel Raise	CAN Error	Contact Dealer.
190	521456	3	Electrical System	Reel Lower	Switch Error	Check switch for damage or binding. Contact Dealer.
190	521456	4	Electrical System	Reel Lower	CAN Error	Contact Dealer.
190	521457	3	Electrical System	GSL Shift Switch	Switch Error	Check switch for damage or binding. Contact Dealer.
190	521457	4	Electrical System	GSL Shift Switch	CAN Error	Contact Dealer.
190	521459	3	Electrical System	Wheel Position	Switch Error	Check switch for damage or binding. Contact Dealer.
190	521459	4	Electrical System	Wheel Position	CAN Error	Contact Dealer.

8.4 Engine Fault Codes

Example: Harvest Performance Tracker (HPT) displays the Fault Code 629S 16F 28C

- 629S - S represents the J1939 SPN column. Locate code 629 in that column.
- 12F - F represents the FMI column. Locate code 12 in that column.
- 28C - C is occurrences, 28 is the quantity.
- J1939 SPN description - Controller 1. The Cummins description of this is engine control module critical internal failure - Bad intelligent device or component
- The Cummins Dealer will request the fault code that corresponds with the number that you have located in the J1939 SPN column.

J1939 SPN	J1939 FMI	Telltale	Lamp	Cummins Fault Code	J1939_SPN Description	Detail
27	4	Check Engine	Amber	2272	Engine Exhaust Gas	EGR Valve Position Circuit - Voltage below normal, or shorted to low source
51	3	Check Engine	None	6497	Engine Intake Throttle Actuator Position Sensor Circuit	Engine Intake Throttle Actuator Position Sensor Circuit - Voltage above normal, or shorted to high source
51	4	Check Engine	None	6498	Engine Intake Throttle Actuator Position Sensor Circuit	Engine Intake Throttle Actuator Position Sensor Circuit - Voltage above normal, or shorted to low source
81	16	Check Engine	Amber	2754	Engine Diesel Particulate Filter Intake Pressure	Engine Diesel Particulate Filter Intake Pressure - Data Valid But Above Normal Operating range - Moderately Severe Level
84	2	Check Engine	Amber	241	Wheel-Based Vehicle Speed	Wheel-Based Vehicle Speed - Data is erratic, intermittent, or incorrect
84	10	Check Engine	Amber	242	Wheel-Based Vehicle Speed	Wheel-Based Vehicle Speed Sensor Circuit tampering has been detected - Abnormal rate of change
84	19	Check Engine	Amber	3525	Wheel-Based Vehicle Speed	Wheel-Based Vehicle Speed - Received network data in error
91	0	Stop Engine	Red	148	Accelerator Pedal Position 1	Accelerator Pedal or Lever Position Sensor 1 - Data valid but above normal operational range - Most Severe Level
91	1	Stop Engine	Red	147	Accelerator Pedal Position 1	Accelerator Pedal or Lever Position 1 Sensor Circuit Frequency - Data valid but below normal operating range
91	2	Stop Engine	Red	1242	Accelerator Pedal Position 1	Accelerator Pedal or Lever Position Sensor 1 - Data is erratic, intermittent, or incorrect

J1939 SPN	J1939 FMI	Telltale	Lamp	Cummins Fault Code	J1939_SPN Description	Detail
91	3	Check Engine	Amber	1358	Accelerator Pedal Position 1	Accelerator Pedal or Lever Position Sensor 1 Circuit - Voltage above normal, or shorted to high source
91	4	Check Engine	Amber	1359	Accelerator Pedal Position 1	Accelerator Pedal or Lever Position Sensor 1 Circuit - Voltage below normal, or shorted to low source
91	9	Stop Engine	Red	3326	Accelerator Pedal Position 1	SAE J1939 Multiplexed Accelerator Pedal or Lever Sensor System - Abnormal update rate
91	19	Stop Engine	Red	1515	Accelerator Pedal Position 1	SAE J1939 Multiplexed Accelerator Pedal or Lever Sensor System - Received network data in error
94	3	Check Engine	Amber	546	Engine Fuel Delivery Pressure	Fuel Delivery Pressure Sensor Circuit - Voltage above normal, or shorted to high source
94	4	Check Engine	Amber	547	Engine Fuel Delivery Pressure	Fuel Delivery Pressure Sensor Circuit - Voltage below normal, or shorted to low source
95	16	Check Engine	Amber	2372	Engine Fuel Filter Differential Pressure	Fuel Filter Differential Pressure - Data valid but above normal operating range - Moderately Severe Level
97	3	Check Engine	Amber	428	Water In Fuel Indicator	Water in Fuel Indicator Sensor Circuit - Voltage above normal, or shorted to high source
97	4	Check Engine	Amber	429	Water In Fuel Indicator	Water in Fuel Indicator Sensor Circuit - Voltage below normal, or shorted to low source
97	15	Water in Fuel	Amber (Blinking)	418	Water In Fuel Indicator	Water in Fuel Indicator - Data valid but above normal operating range - Least Severe Level
97	16	Water in Fuel	Amber	1852	Water In Fuel Indicator	Water in Fuel Indicator - Data valid but above normal operating range - Moderately Severe Level
100	1	Eng Oil Press	Red	415	Engine Oil Pressure	Engine Oil Rifle Pressure - Data valid but below normal operational range - Most Severe Level
100	2	Check Engine	Amber	435	Engine Oil Pressure	Engine Oil Rifle Pressure - Data is erratic, intermittent, or incorrect
100	3	Check Engine	Amber	135	Engine Oil Pressure	Engine Oil Rifle Pressure 1 Sensor Circuit - Voltage above normal, or shorted to high source

J1939 SPN	J1939 FMI	Telltale	Lamp	Cummins Fault Code	J1939_SPN Description	Detail
100	4	Check Engine	Amber	141	Engine Oil Pressure	Engine Oil Rifle Pressure 1 Sensor Circuit - Voltage below normal, or shorted to low source
100	18	Check Engine	Amber	143	Engine Oil Pressure	Engine Oil Rifle Pressure - Data valid but above normal operating range - Moderately Severe Level
101	0	Stop Engine	Red	556	Engine Crankcase Pressure	Crankcase Pressure - Data valid but above normal operational range - Most Severe Level
101	2	Check Engine	Amber	1942	Engine Crankcase Pressure	Crankcase Pressure - Data is erratic, intermittent, or incorrect
101	3	Check Engine	Amber	1843	Engine Crankcase Pressure	Crankcase Pressure Circuit - Voltage above normal, or shorted to high source
101	4	Check Engine	Amber	1844	Engine Crankcase Pressure	Crankcase Pressure Circuit - Voltage below normal, or shorted to low source
101	15	Check Engine	Amber (Blinking)	1974	Engine Crankcase Pressure	Crankcase Pressure - Data valid but above normal operating range - Least Severe Level
101	16	Check Engine	Amber	555	Engine Crankcase Pressure	Crankcase Pressure - Data valid but above normal operating range - Moderately Severe Level
102	3	Check Engine	Amber	122	Engine Intake Manifold #1 Pressure	Intake Manifold 1 Pressure Sensor Circuit - Voltage above normal, or shorted to high source
102	4	Check Engine	Amber	123	Engine Intake Manifold #1 Pressure	Intake Manifold 1 Pressure Sensor Circuit - Voltage below normal, or shorted to low source
102	16	Check Engine	Amber	124	Engine Intake Manifold #1	Intake Manifold 1 Pressure - Data valid but above normal operating range - Moderately Severe Level
103	15	Check Engine	None	2288	Engine Turbocharger 1 Speed	Turbocharger 1 Speed - Data valid but above normal operating range - Least Severe Level
103	16	Check Engine	Amber	595	Engine Turbocharger 1 Speed	Turbocharger 1 Speed - Data valid but above normal operating range - Moderately Severe Level
103	18	Check Engine	Amber	687	Engine Turbocharger 1 Speed	Turbocharger 1 Speed - Data valid but below normal operating range - Moderately Severe Level
105	0	Check Engine	Red	155	Engine Intake Manifold 1	Intake Manifold 1 Temperature - Data valid but above normal operational range - Most Severe Level

J1939 SPN	J1939 FMI	Telltale	Lamp	Cummins Fault Code	J1939_SPN Description	Detail
105	3	Check Engine	Amber	153	Engine Intake Manifold 1	Intake Manifold 1 Temperature Sensor Circuit - Voltage above normal, or shorted to high source
105	4	Check Engine	Amber	154	Engine Intake Manifold 1	Intake Manifold 1 Temperature Sensor Circuit - Voltage below normal, or shorted to low source
105	15	Check Engine	None	2964	Engine Intake Manifold #1	Intake Manifold 1 Temperature - Data valid but above normal operating range - Least Severe Level
105	16	Check Engine	Amber	488	Engine Intake Manifold	Intake Manifold 1 Temperature - Data valid but above normal operating range - Moderately Severe Level
107	15	Eng Air Filter	Amber	5576	Engine Air Filter 1 Differential Pressure	Engine Air Filter Differential Pressure - Data valid but above normal operating range - Least Severe Level
107	16	Eng Air Filter	Amber	3341	Engine Air Filter 1 Differential Pressure	Engine Air Filter Differential Pressure - Data valid but above normal operating range - Moderately Severe Level
108	3	Check Engine	Amber	221	Barometric Pressure	Barometric Pressure Sensor Circuit - Voltage above normal, or shorted to high source
108	4	Check Engine	Amber	222	Barometric Pressure	Barometric Pressure Sensor Circuit - Voltage above normal, or shorted to low source
110	0	Eng coolant temp	Red	151	Engine Coolant Temperature	Engine Coolant Temperature - Data valid but above normal operational range - Most Severe Level
110	3	Check Engine	Amber	144	Engine Coolant Temperature	Engine Coolant Temperature 1 Sensor Circuit - Voltage above normal, or shorted to high source
110	4	Check Engine	Amber	145	Engine Coolant Temperature	Engine Coolant Temperature 1 Sensor Circuit - Voltage below normal, or shorted to low source
110	16	Eng coolant temp	Amber	146	Engine Coolant Temperature	Engine Coolant Temperature - Data valid but above normal operating range - Moderately Severe Level
110	31	Check Engine	None	2659	Engine Coolant Temperature	Engine Coolant Temperature - Condition Exists
111	1	Coolant Level	Red	235	Engine Coolant Level	Coolant Level - Data valid but below normal operational range - Most Severe Level

J1939 SPN	J1939 FMI	Telltale	Lamp	Cummins Fault Code	J1939_SPN Description	Detail
111	3	Check Engine	None	6522	Engine Coolant Level	Coolant Level Sensor 1 Circuit - Voltage above normal, or shorted to high source
111	4	Check Engine	None	6523	Engine Coolant Level	Coolant Level Sensor 1 Circuit - Voltage below normal, or shorted to low source
111	9	Check Engine	Amber	3613	SAE J1939 Multiplexing PGN Timeout	SAE J1939 Multiplexing PGN Timeout Error - Abnormal update rate
111	17	Coolant Level	Amber (Blinking)	2448	Engine Coolant Level	Coolant Level - Data valid but below normal operating range - Least Severe Level
111	18	Coolant Level	Amber	197	Engine Coolant Level	Coolant Level - Data valid but below normal operating range - Moderately Severe Level
111	19	Check Engine	Amber	3614	SAE J1939 Multiplexing PGN Timeout	Coolant Level Sensor - Received Network Data in Error
157	0	Stop Engine	Red	449	Engine Injector Metering Rail 1	Injector Metering Rail 1 Pressure - Data valid but above normal operational range - Most Severe Level
157	3	Check Engine	Amber	451	Engine Injector Metering Rail 1	Injector Metering Rail 1 Pressure Sensor Circuit - Voltage above normal, or shorted to high source
157	4	Check Engine	Amber	452	Engine Injector Metering Rail 1	Injector Metering Rail 1 Pressure Sensor Circuit - Voltage below normal, or shorted to low source
157	16	Check Engine	Amber	553	Engine Injector Metering Rail 1	Injector Metering Rail 1 Pressure - Data valid but above normal operating range - Moderately Severe Level
157	18	Check Engine	Amber	559	Engine Injector Metering Rail 1	Injector Metering Rail 1 Pressure - Data valid but below normal operating range - Moderately Severe Level
168	15	Battery	None	6256	Battery Potential / Power Input 1	Battery 1 Voltage - Data valid but above normal operating range - Moderately Severe Level
168	16	Battery	Amber	442	Battery Potential / Power Input 1	Battery 1 Voltage - Data valid but above normal operating range - Moderately Severe Level
168	17	Battery	None	6257	Battery Potential / Power Input 1	Battery 1 Voltage - Data valid but below normal operating range - Moderately Severe Level

J1939 SPN	J1939 FMI	Telltale	Lamp	Cummins Fault Code	J1939_SPN Description	Detail
168	18	Check Engine	Amber	249	Battery Potential / Power Input 1	Battery 1 Voltage - Data valid but below normal operating range - Moderately Severe Level
171	3	Check Engine	Amber	256	Ambient Air Temperature	Ambient Air Temperature Sensor 1 Circuit - Voltage above normal, or shorted to high source
171	4	Check Engine	Amber	3531	Ambient Air Temperature	Ambient Air Temperature Sensor 1 Circuit - Voltage below normal, or shorted to low source
171	9	Check Engine	Amber	234	Ambient Air Temperature	Ambient Air Temperature - Abnormal update rate
175	3	Check Engine	None	689	Engine Oil Temperature 1	Engine Oil Temperature Sensor 1 Circuit - Voltage above normal, or shorted to high source
175	4	Check Engine	None	6525	Engine Oil Temperature 1	Engine Oil Temperature Sensor 1 Circuit - Voltage below normal, or shorted to low source
190	0	Stop Engine	Red	234	Engine Speed	Engine Crankshaft Speed/Position - Data valid but above normal operational range - Most Severe Level
190	2	Check Engine	None	2321	Engine Speed	Engine Crankshaft Speed/Position - Data is erratic, intermittent, or incorrect
190	16	Check Engine	Amber	2468	Engine Speed	Engine Crankshaft Speed/Position - Data valid but above normal operational range - Moderately Severe Level
191	9	Check Engine	Amber	3328	Transmission Output Shaft	Transmission Output Shaft Speed - Abnormal update rate
191	16	Check Engine	Amber	349	Transmission Output Shaft	Transmission Output Shaft Speed - Data valid but above normal operational range - Moderately Severe Level
191	18	Check Engine	Amber	489	Transmission Output Shaft	Transmission Output Shaft Speed - Data valid but below normal operational range - Moderately Severe Level
191	19	Check Engine	Amber	3418	Transmission Output Shaft	Transmission Output Shaft Speed - Received Network Data In Error
237	13	Check Engine	Amber	4517	Vehicle Identification Number	Vehicle Identification Number - Out of Calibration
411	2	Check Engine	Amber	1866	Engine Exhaust Gas	Exhaust Gas Recirculation Differential Pressure - Data is erratic, intermittent, or incorrect

J1939 SPN	J1939 FMI	Telltale	Lamp	Cummins Fault Code	J1939_SPN Description	Detail
411	3	Check Engine	Amber	2273	Engine Exhaust Gas Recirculation 1 Differential Pressure	Exhaust Gas Recirculation Differential Pressure Sensor Circuit - Voltage above normal, or shorted to high source
411	4	Check Engine	Amber	2274	Engine Exhaust Gas Recirculation 1 Differential Pressure	Exhaust Gas Recirculation Differential Pressure Sensor Circuit - Voltage below normal, or shorted to low source
412	3	Check Engine	Amber	2375	Engine Exhaust Gas	Exhaust Gas Recirculation Temperature Sensor Circuit - Voltage above normal, or shorted to high source
412	4	Check Engine	Amber	2376	Engine Exhaust Gas	Exhaust Gas Recirculation Temperature Sensor Circuit - Voltage below normal, or shorted to low source
412	15	Check Engine	None	2961	Engine Exhaust Gas	Exhaust Gas Recirculation Temperature - Data valid but above normal operational range - Least Severe Level
412	16	Check Engine	Amber	2962	Engine Exhaust Gas	Exhaust Gas Recirculation Temperature - Data valid but above normal operational range - Moderately Severe Level
441	3	Check Engine	Amber	293	Auxiliary Temperature 1	Auxiliary Temperature Sensor Input 1 Circuit - Voltage above normal, or shorted to high source
441	4	Check Engine	Amber	294	Auxiliary Temperature 1	Auxiliary Temperature Sensor Input 1 Circuit - Voltage below normal, or shorted to low source
441	14	Check Engine	Amber	6583	Auxiliary Temperature 1	Auxiliary Temperature Sensor Input 1 - Special Instructions
442	3	Check Engine	Amber	3765	Auxiliary Temperature 2	Auxiliary Temperature Sensor Input 2 Circuit - Voltage above normal, or shorted to high source
442	4	Check Engine	Amber	3766	Auxiliary Temperature 2	Auxiliary Temperature Sensor Input 2 Circuit - Voltage below normal, or shorted to low source
558	2	Check Engine	Amber	431	Accelerator Pedal 1 Low Idle Switch	Accelerator Pedal or Lever Idle Validation Switch - Data is erratic, intermittent, or incorrect
558	13	Stop Engine	Red	432	Accelerator Pedal 1 Low Idle Switch	Accelerator Pedal or Lever Idle Validation Switch Circuit - Out of Calibration
558	19	Stop Engine	Red	3527	Accelerator Pedal 1 Low Idle Switch	Accelerator Pedal or Lever Idle Validation Switch - Received Network Data In Error

J1939 SPN	J1939 FMI	Telltale	Lamp	Cummins Fault Code	J1939_SPN Description	Detail
563	9	Check Engine	Amber	3488	Anti-Lock Braking (ABS) Active	Anti-Lock Braking (ABS) Controller - Abnormal update rate
563	31	Check Engine	None	4215	Anti-Lock Braking (ABS) Active	Anti-Lock Braking (ABS) Active - Condition Exists
611	2	Check Engine	Amber	523	System Diagnostic Code #1	Auxiliary Intermediate (PTO) Speed Switch Validation - Data is erratic, intermittent, or incorrect
612	2	Stop Engine	Red	115	System Diagnostic Code #2	Engine Magnetic Speed/Position Lost Both of Two Signals - Data is erratic, intermittent, or incorrect
625	9	Stop Engine	Red	291	Proprietary Datalink	Proprietary Datalink Error (OEM/ Vehicle Datalink) - Abnormal update rate
629	12	Check Engine	Amber	343	Controller #1	Engine Control Module Warning Internal Hardware Failure - Bad intelligent device or component
630	12	Stop Engine	Red	3697	Engine Control Module Calibration Memory	Engine Control Module Calibration Memory - Bad intelligent device or component
633	31	Check Engine	Amber	2311	Engine Fuel Actuator 1 Control Command	Electronic Fuel Injection Control Valve Circuit - Condition Exists
639	9	Check Engine	Amber	285	J1939 Network #1, Primary Vehicle Network (previously SAE J1939 Data Link)	SAE J1939 Multiplexing PGN Timeout Error - Abnormal update rate
639	13	Check Engine	Amber	286	J1939 Network #1, Primary Vehicle Network (previously SAE J1939 Data Link)	SAE J1939 Multiplexing Configuration Error - Out of Calibration
640	14	Stop Engine	Red	599	Engine External Protection Input	Auxiliary Commanded Dual Output Shutdown - Special Instructions
641	7	Check Engine	Amber	2387	Engine Variable Geometry Turbocharger Actuator #1	VGT Actuator Driver Circuit (Motor) - Mechanical system not responding or out of adjustment
641	9	Check Engine	Amber	1894	Engine Variable Geometry Turbocharger Actuator #1	VGT Actuator Driver Circuit - Abnormal update rate
641	11	Check Engine	Amber	2198	Engine Variable Geometry Turbocharger Actuator #1	VGT Actuator Driver Circuit - Root Cause Not Known
641	12	Stop Engine	Red	2634	Engine Variable Geometry Turbocharger Actuator #1	VGT Actuator Controller - Bad intelligent device or component
641	13	Stop Engine	Red	2449	Engine Variable Geometry Turbocharger Actuator #1	VGT Actuator Controller - Out of Calibration

J1939 SPN	J1939 FMI	Telltale	Lamp	Cummins Fault Code	J1939_SPN Description	Detail
641	15	Check Engine	None	1976	Engine Variable Geometry Turbocharger Actuator #1	VGT Actuator Driver Over Temperature (Calculated) - Data valid but above normal operational range - Least Severe Level
641	31	Stop Engine	Red	2635	Engine Variable Geometry Turbocharger Actuator #1	VGT Actuator Driver Circuit - Condition exists
647	3	Check Engine	None	6263	Engine Fan Clutch 1 Output Device Driver	Fan Control Circuit - Voltage above normal, or shorted to high source
647	4	Check Engine	None	6264	Engine Fan Clutch 1 Output Device Driver	Fan Control Circuit - Voltage below normal, or shorted to low source
651	5	Check Engine	Amber	322	Engine Injector Cylinder #01	Injector Solenoid Driver Cylinder 1 Circuit - Current below normal or open circuit
652	5	Check Engine	Amber	331	Engine Injector Cylinder #02	Injector Solenoid Driver Cylinder 2 Circuit - Current below normal or open circuit
652	7	Check Engine	Amber	1141	Engine Injector Cylinder #02	Injector Solenoid Driver Cylinder 2 - Mechanical system not responding or out of adjustment
653	5	Check Engine	Amber	324	Engine Injector Cylinder #03	Injector Solenoid Driver Cylinder 3 Circuit - Current below normal or open circuit
653	7	Check Engine	Amber	1142	Engine Injector Cylinder #03	Injector Solenoid Driver Cylinder 3 - Mechanical system not responding or out of adjustment
654	5	Check Engine	Amber	332	Engine Injector Cylinder #04	Injector Solenoid Driver Cylinder 4 Circuit - Current below normal or open circuit
654	7	Check Engine	Amber	1143	Engine Injector Cylinder #04	Injector Solenoid Driver Cylinder 4 - Mechanical system not responding or out of adjustment
655	5	Check Engine	Amber	323	Engine Injector Cylinder #05	Injector Solenoid Driver Cylinder 5 Circuit - Current below normal or open circuit
655	7	Check Engine	Amber	1144	Engine Injector Cylinder #05	Injector Solenoid Driver Cylinder 5 - Mechanical system not responding or out of adjustment
656	5	Check Engine	Amber	325	Engine Injector Cylinder #06	Injector Solenoid Driver Cylinder 6 Circuit - Current below normal or open circuit
656	7	Check Engine	Amber	1145	Engine Injector Cylinder #06	Injector Solenoid Driver Cylinder 6 - Mechanical system not responding or out of adjustment

J1939 SPN	J1939 FMI	Telltale	Lamp	Cummins Fault Code	J1939_SPN Description	Detail
677	3	Check Engine	Amber	584	Engine Starter Motor Relay	Starter Relay Driver Circuit - Voltage above normal, or shorted to high source
677	4	Check Engine	Amber	585	Engine Starter Motor Relay	Starter Relay Driver Circuit - Voltage below normal, or shorted to low source
697	3	Check Engine	Amber	2557	Auxiliary PWM Driver #1	Auxiliary PWM Driver 1 Circuit - Voltage above normal, or shorted to high source
697	4	Check Engine	Amber	2558	Auxiliary PWM Driver #1	Auxiliary PWM Driver 1 Circuit - Voltage below normal, or shorted to low source
701	14	Stop Engine	Red	4734	Auxiliary I/O #01	Auxiliary Input/Output 1 - Special Instructions
702	3	Check Engine	Amber	527	Auxiliary I/O #02	Auxiliary Input/Output 2 Circuit - Voltage above normal, or shorted to high source
703	3	Check Engine	Amber	529	Auxiliary I/O #03	Auxiliary Input/Output 3 Circuit - Voltage above normal, or shorted to high source
723	2	Check Engine	None	2322	Engine Speed 2	Engine Camshaft Speed/Position Sensor - Data is erratic, intermittent, or incorrect
723	7	Check Engine	Amber	731	Engine Speed 2	Engine Speed/Position Camshaft and Crankshaft Misalignment - Mechanical system not responding or out of adjustment
729	3	Check Engine	None	6556	Engine Intake Air Heater Driver #1	Engine Intake Air Heater 1 Circuit - Voltage above normal, or shorted to high source
729	4	Check Engine	None	6557	Engine Intake Air Heater Driver #1	Engine Intake Air Heater 1 Circuit - Voltage below normal, or shorted to low source
748	9	Check Engine	Amber	3641	Transmission Output Retarder	Transmission Output Retarder - Abnormal update rate
862	3	Check Engine	None	6336	Crankcase Breather Heater Circuit	Crankcase Breather Filter Heater Circuit - Voltage above normal, or shorted to high source
862	4	Check Engine	None	6337	Crankcase Breather Heater Circuit	Crankcase Breather Filter Heater Circuit - Voltage below normal, or shorted to low source
974	3	Stop Engine	Red	133	Remote Accelerator Pedal Position	Remote Accelerator Pedal or Lever Position Sensor 1 Circuit - Voltage above normal, or shorted to high source

J1939 SPN	J1939 FMI	Telltale	Lamp	Cummins Fault Code	J1939_SPN Description	Detail
974	4	Stop Engine	Red	134	Remote Accelerator Pedal Position	Remote Accelerator Pedal or Lever Position Sensor 1 Circuit - Voltage below normal, or shorted to low source
974	19	Stop Engine	Red	288	Remote Accelerator Pedal Position	SAE J1939 Multiplexing Remote Accelerator Pedal or Lever Position Sensor System - Received network data in error
976	2	Check Engine	None	6563	PTO Governor State	Auxiliary Intermediate (PTO) Speed Switch Validation - Data is erratic, intermittent, or incorrect
1072	3	Check Engine	None	6418	Engine (Compression) Brake Output #1	Engine Brake Actuator Driver 1 Circuit - Voltage above normal, or shorted to high source
1072	4	Check Engine	None	6419	Engine (Compression) Brake Output #1	Engine Brake Actuator Driver 1 Circuit - Voltage below normal, or shorted to low source
1073	3	Check Engine	None	6421	Engine (Compression) Brake Output #2	Engine Brake Actuator Driver Output 2 Circuit - Voltage above normal, or shorted to high source
1073	4	Check Engine	None	6422	Engine (Compression) Brake Output #2	Engine Brake Actuator Driver Output 2 Circuit - Voltage below normal, or shorted to low source
1075	3	Check Engine	None	6258	Engine Electric Lift Pump for Engine Fuel Supply	Electric Lift Pump for Engine Fuel Supply Circuit - Voltage above normal, or shorted to high source
1075	4	Check Engine	None	6259	Engine Electric Lift Pump for Engine Fuel Supply	Electric Lift Pump for Engine Fuel Supply Circuit - Voltage below normal, or shorted to low source
1081	9	Check Engine	Amber	3555	Engine Wait to Start Lamp	Engine Wait to Start Lamp - Abnormal update rate
1172	3	Check Engine	Amber	691	Engine Turbocharger 1 Compressor Intake Temperature	Turbocharger 1 Compressor Intake Temperature Circuit - Voltage above normal, or shorted to high source
1172	4	Check Engine	Amber	692	Engine Turbocharger 1 Compressor Intake Temperature	Turbocharger 1 Compressor Intake Temperature Circuit - Voltage below normal, or shorted to low source
1176	2	Check Engine	Amber	743	Engine Turbocharger 1 Compressor Intake Pressure	Turbocharger 1 Compressor Intake Pressure - Data is erratic, intermittent, or incorrect
1176	3	Check Engine	Amber	741	Engine Turbocharger 1 Compressor Intake Pressure	Turbocharger 1 Compressor Intake Pressure Circuit - Voltage above normal, or shorted to high source

J1939 SPN	J1939 FMI	Telltale	Lamp	Cummins Fault Code	J1939_SPN Description	Detail
1176	4	Check Engine	Amber	742	Engine Turbocharger 1 Compressor Intake Pressure	Turbocharger 1 Compressor Intake Pressure Circuit - Voltage below normal, or shorted to low source
1194	13	Stop Engine	Red	3298	Anti-theft Encryption Seed Present Indicator	Anti-theft Encryption Seed - Out of Calibration
1209	2	Check Engine	Amber	2554	Engine Exhaust Gas Pressure 1	Exhaust Gas Pressure 1 - Data is erratic, intermittent, or incorrect
1209	3	Check Engine	Amber	2373	Engine Exhaust Gas Pressure 1	Exhaust Gas Pressure Sensor 1 Circuit - Voltage above normal, or shorted to high source
1209	4	Check Engine	Amber	2374	Engine Exhaust Gas Pressure 1	Exhaust Gas Pressure Sensor 1 Circuit - Voltage below normal, or shorted to low source
1231	2	Check Engine	None	3329	J1939 Network #2	J1939 Network #2 - Data is erratic, intermittent, or incorrect
1235	2	Check Engine	None	3331	J1939 Network #3	J1939 Network #3 - Data is erratic, intermittent, or incorrect
1267	3	Check Engine	Amber	338	Idle Shutdown Vehicle Accessories Relay Driver Circuit	Idle Shutdown Vehicle Accessories Relay Driver Circuit - Voltage above normal, or shorted to high source
1267	4	Check Engine	Amber	339	Idle Shutdown Vehicle Accessories Relay Driver Circuit	Idle Shutdown Vehicle Accessories Relay Driver Circuit - Voltage below normal, or shorted to low source
1323	31	Check Engine	Amber	1654	Engine Misfire Cylinder #1	Engine Misfire Cylinder 1 - Condition Exists
1324	31	Check Engine	Amber	1655	Engine Misfire Cylinder #2	Engine Misfire Cylinder 2 - Condition exists
1325	31	Check Engine	Amber	1656	Engine Misfire Cylinder #3	Engine Misfire Cylinder 3 - Condition Exists
1326	31	Check Engine	Amber	1657	Engine Misfire Cylinder #4	Engine Misfire Cylinder 4 - Condition Exists
1327	31	Check Engine	Amber	1658	Engine Misfire Cylinder #5	Engine Misfire Cylinder 5 - Condition Exists
1328	31	Check Engine	Amber	1659	Engine Misfire Cylinder #6	Engine Misfire Cylinder 6 - Condition Exists
1347	3	Check Engine	Amber	272	Engine Fuel Pump Pressurizing Assembly #2	Engine Fuel Pump Pressurizing Assembly 1 Circuit - Voltage above normal, or shorted to high source
1347	4	Check Engine	Amber	271	Engine Fuel Pump Pressurizing Assembly #1	Engine Fuel Pump Pressurizing Assembly 1 Circuit - Voltage below normal, or shorted to low source

J1939 SPN	J1939 FMI	Telltale	Lamp	Cummins Fault Code	J1939_SPN Description	Detail
1347	7	Check Engine	Amber	281	Engine Fuel Pump Pressurizing Assembly #3	Engine Fuel Pump Pressurizing Assembly 1 - Mechanical system not responding or out of adjustment
1349	3	Check Engine	Amber	483	Engine Injector Metering Rail 2 Pressure	Injector Metering Rail 2 Pressure Sensor Circuit - Voltage above normal, or shorted to high source
1377	2	Check Engine	Amber	497	Engine Synchronization Switch	Multiple Unit Synchronization Switch - Data is erratic, intermittent, or incorrect
1378	31	Check Engine	Amber (Blinking)	649	Engine Oil Change Interval	Engine Oil Change Interval - Condition exists
1387	3	Check Engine	Amber	1539	Auxiliary Pressure #1	Auxiliary Pressure Sensor Input 1 Circuit - Voltage above normal, or shorted to high source
1387	4	Check Engine	Amber	1621	Auxiliary Pressure #1	Auxiliary Pressure Sensor Input 1 Circuit - Voltage below normal, or shorted to low source
1388	3	Check Engine	Amber	297	Auxiliary Pressure #2	Auxiliary Pressure Sensor Input 2 Circuit - Voltage above normal, or shorted to high source
1388	4	Check Engine	Amber	298	Auxiliary Pressure #2	Auxiliary Pressure Sensor Input 2 Circuit - Voltage below normal, or shorted to low source
1388	14	Check Engine	Amber	6584	Auxiliary Pressure #2	Auxiliary Pressure Sensor Input 2 - Special Instructions
1569	31	Check Engine	Amber	3714	Engine Protection Torque Derate	Engine Protection Torque Derate - Condition Exists
1623	9	Check Engine	Amber	3186	Tachograph output shaft speed	Tachograph Output Shaft Speed - Abnormal update rate
1623	13	Check Engine	Amber	5248	Tachograph output shaft speed	Tachograph Output Shaft Speed - Out of Calibration
1623	19	Check Engine	Amber	3213	Tachograph output shaft speed	Tachograph Output Shaft Speed - Received Network Data In Error
1632	14	Check Engine	Amber	2998	Engine Torque Limit Feature	Engine Torque Limit Feature - Special Instructions
1639	0	Check Engine	Amber	4789	Fan Speed	Fan Speed - Data valid but above normal operational range - Most Severe Level
1639	1	Check Engine	Amber	4791	Fan Speed	Fan Speed - Data valid but below normal operational range - Most Severe Level
1639	2	Check Engine	None	6469	Fan Speed	Fan Speed – Data is erratic, intermittent, or Incorrect

J1939 SPN	J1939 FMI	Telltale	Lamp	Cummins Fault Code	J1939_SPN Description	Detail
1639	15	Check Engine	None	6467	Fan Speed	Fan Speed - Data valid but above normal operational range - Most Severe Level
1639	17	Check Engine	None	6468	Fan Speed	Fan Speed - Data valid but below normal operational range - Most Severe Level
1668	2	Check Engine	None	4437	J1939 Network #4 - Data erratic	J1939 Network #4 - Data is erratic, intermittent, or incorrect
1675	31	Check Engine	None	3737	Engine Starter Mode	Engine Starter Mode Overcrank Protection - Condition Exists
1761	1	DEF	Amber	1673	Aftertreatment 1 Diesel Exhaust Fluid Tank Level	Aftertreatment 1 Diesel Exhaust Fluid Tank Level - Data valid but below normal operational range - Most Severe Level
1761	3	Check Engine	Amber	1669	Aftertreatment 1 Diesel Exhaust Fluid Tank Level	Aftertreatment 1 Diesel Exhaust Fluid Tank Level Sensor Circuit - Voltage above normal, or shorted to high source
1761	4	Check Engine	Amber	1668	Aftertreatment 1 Diesel Exhaust Fluid Tank Level	Aftertreatment 1 Diesel Exhaust Fluid Tank Level Sensor Circuit - Voltage below normal, or shorted to low source
1761	9	Check Engine	Amber	4677	Aftertreatment 1 Diesel Exhaust Fluid Tank Level	SAE J1939 Multiplexing PGN Timeout Error - Abnormal update rate
1761	10	Check Engine	Amber	4769	Aftertreatment 1 Diesel Exhaust Fluid Tank Level	Aftertreatment 1 Diesel Exhaust Fluid Tank Level Sensor - Abnormal Rate of Change
1761	11	Check Engine	None	6562	Aftertreatment 1 Diesel Exhaust Fluid Tank Level	Aftertreatment 1 Diesel Exhaust Fluid Tank Level Sensor - Root Cause Not Known
1761	13	Check Engine	None	6526	Aftertreatment 1 Diesel Exhaust Fluid Tank Temperature	Aftertreatment 1 Diesel Exhaust Fluid Tank Level Sensor - Out of Calibration
1761	17	DEF	Amber (Blinking)	3497	Aftertreatment 1 Diesel Exhaust Fluid Tank Level	Aftertreatment 1 Diesel Exhaust Fluid Tank Level - Data Valid But Below Normal Operating Range - Least Severe Level
1761	18	DEF	Amber (Blinking)	3498	Aftertreatment 1 Diesel Exhaust Fluid Tank Level	Aftertreatment 1 Diesel Exhaust Fluid Tank Level - Data valid but below normal operational range - Moderately Severe Level
2623	3	Check Engine	Amber	1239	Accelerator Pedal #1 Channel 2	Accelerator Pedal or Lever Position Sensor 2 Circuit - Voltage above normal, or shorted to high source

J1939 SPN	J1939 FMI	Telltale	Lamp	Cummins Fault Code	J1939_SPN Description	Detail
2623	4	Check Engine	Amber	1241	Accelerator Pedal #1 Channel 2	Accelerator Pedal or Lever Position Sensor 2 Circuit - Voltage below normal, or shorted to low source
2630	3	Check Engine	Amber	2571	Engine Charge Air Cooler 1 Outlet Temperature	Engine Charge Air Cooler Outlet Temperature - Voltage above normal, or shorted to high source
2630	4	Check Engine	Amber	2572	Engine Charge Air Cooler 1 Outlet Temperature	Engine Charge Air Cooler Outlet Temperature - Voltage below normal, or shorted to low source
2789	15	Check Engine	None	2346	Engine Turbocharger 1 Calculated Turbine Intake Temperature	Turbocharger Turbine Intake Temperature - Data valid but above normal operational range - Least Severe
2791	5	Check Engine	Amber	2349	Engine Exhaust Gas Recirculation 1 (EGR1) Valve Control	EGR Valve Control Circuit - Current below normal or open circuit
2791	6	Check Engine	Amber	2353	Engine Exhaust Gas Recirculation 1 (EGR1) Valve Control	EGR Valve Control Circuit - Current above normal or grounded circuit
2791	7	Check Engine	None	6555	Engine Exhaust Gas Recirculation 1 (EGR1) Valve Control	EGR Valve Control Circuit - Mechanical system not responding or out of adjustment
2791	13	Check Engine	Amber	1896	Engine Exhaust Gas Recirculation 1 (EGR1) Valve Control	EGR Valve Controller - Out of Calibration
2791	15	Check Engine	Amber	1961	Engine Exhaust Gas Recirculation 1 (EGR1) Valve Control	EGR Valve Control Circuit Over Temperature - Data valid but above normal operational range - Least Severe Level
3031	2	Check Engine	Amber	1679	Aftertreatment 1 Diesel Exhaust Fluid Tank Temperature	Aftertreatment 1 Diesel Exhaust Fluid Tank Temperature - Data is erratic, intermittent, or incorrect
3031	3	Check Engine	Amber	1678	Aftertreatment 1 Diesel Exhaust Fluid Tank Temperature	Aftertreatment 1 Diesel Exhaust Fluid Tank Temperature Sensor - Voltage above normal, or shorted to high source
3031	4	Check Engine	None	6559	Aftertreatment 1 Diesel Exhaust Fluid Tank Temperature	Aftertreatment 1 Diesel Exhaust Fluid Tank Temperature Sensor - Voltage below normal, or shorted to low source
3031	9	Check Engine	Amber	4572	Aftertreatment 1 Diesel Exhaust Fluid Tank Temperature	Aftertreatment 1 Diesel Exhaust Fluid Tank Temperature - Abnormal Update Rate
3031	11	Check Engine	Amber	4737	Aftertreatment 1 Diesel Exhaust Fluid Tank Temperature	Aftertreatment 1 Diesel Exhaust Fluid Tank Temperature - Root Cause Not Known

J1939 SPN	J1939 FMI	Telltale	Lamp	Cummins Fault Code	J1939_SPN Description	Detail
3031	13	Check Engine	Amber	4731	Aftertreatment 1 Diesel Exhaust Fluid Tank Temperature	Aftertreatment 1 Diesel Exhaust Fluid Tank Temperature Sensor - Out of Calibration
3216	2	Check Engine	Amber	3228	Aftertreatment 1 Intake NOx	Aftertreatment 1 Intake NOx Sensor - Data is erratic, intermittent, or incorrect
3216	4	Check Engine	Amber	1885	Aftertreatment 1 Intake NOx	Aftertreatment 1 Intake NOx Sensor Circuit - Voltage below normal, or shorted to low source
3216	9	Check Engine	Amber	3232	Aftertreatment 1 Intake NOx	Aftertreatment 1 Intake NOx Sensor - Abnormal update rate
3216	10	Check Engine	None	6621	Aftertreatment 1 Intake NOx	Aftertreatment 1 Intake NOx Sensor - Abnormal rate of change
3216	13	Check Engine	Amber	3718	Aftertreatment 1 Intake NOx	Aftertreatment 1 Intake NOx - Out of Calibration
3216	16	Check Engine	Amber	3726	Aftertreatment 1 Intake NOx	Aftertreatment 1 Intake NOx - Data valid but above normal operating range - Moderately Severe Level
3216	20	Check Engine	None	6458	Aftertreatment 1 Intake NOx	Aftertreatment 1 Intake NOx Sensor - Data not Rational - Drifted High
3216	21	Check Engine	None	6459	Aftertreatment 1 Intake NOx	Aftertreatment 1 Intake NOx Sensor - Data not Rational - Drifted High
3218	2	Check Engine	Amber	3682	Aftertreatment 1 Intake Gas Sensor Power Status	Aftertreatment 1 Intake NOx Sensor Power Supply - Data is erratic, intermittent, or incorrect
3226	2	Check Engine	None	6464	Aftertreatment 1 Outlet NOx	Aftertreatment 1 Outlet NOx Sensor - Data not Rational - Drifted High
3226	4	Check Engine	None	6521	Aftertreatment Outlet NOx Sensor Circuits	Aftertreatment Outlet NOx Sensor Circuit- Voltage below normal or shorted to low source
3226	9	Check Engine	Amber	2771	Aftertreatment 1 Outlet NOx	Aftertreatment 1 Outlet NOx Sensor - Abnormal update rate
3226	10	Check Engine	None	6565	Aftertreatment 1 Outlet NOx	Aftertreatment 1 Outlet NOx Sensor - Abnormal rate of change
3226	13	Check Engine	Amber	3717	Aftertreatment 1 Outlet NOx	Aftertreatment 1 Outlet NOx Sensor - Out of Calibration
3226	20	Check Engine	None	6462	Aftertreatment 1 Outlet NOx	Aftertreatment 1 Outlet NOx Sensor - Data not Rational - Drifted High

J1939 SPN	J1939 FMI	Telltale	Lamp	Cummins Fault Code	J1939_SPN Description	Detail
3226	21	Check Engine	None	6463	Aftertreatment 1 Outlet NOx	Aftertreatment 1 Outlet NOx Sensor - Data not Rational - Drifted High
3228	2	Check Engine	None	6582	Aftertreatment 1 Outlet Gas Sensor Power Status	Aftertreatment 1 Outlet NOx Sensor Power Supply - Data is erratic, intermittent, or incorrect
3242	0	Stop Engine	Red	3311	Aftertreatment 1 Diesel Particulate Filter Intake Gas Temperature	Aftertreatment 1 Diesel Particulate Filter Intake Temperature - Data valid but above normal operation
3242	2	Check Engine	Amber	3318	Aftertreatment 1 Diesel Particulate Filter Intake Gas Temperature	Aftertreatment 1 Diesel Particulate Filter Intake Temperature - Data is erratic, intermittent, or incorrect
3242	3	Check Engine	Amber	3317	Aftertreatment 1 Diesel Particulate Filter Intake Gas Temperature	Aftertreatment 1 Diesel Particulate Filter Intake Temperature Sensor Circuit - Voltage above normal, or shorted to high source
3242	4	Check Engine	Amber	3316	Aftertreatment 1 Diesel Particulate Filter Intake Gas Temperature	Aftertreatment 1 Diesel Particulate Filter Intake Temperature Sensor Circuit - Voltage below normal, or shorted to low source
3242	15	Check Engine	Amber	3254	Aftertreatment 1 Diesel Particulate Filter Intake Gas Temperature	Aftertreatment 1 Diesel Particulate Filter Intake Temperature - Data valid but above normal operating range
3242	16	Stop Engine	Red	3253	Aftertreatment 1 Diesel Particulate Filter Intake Gas Temperature	Aftertreatment 1 Diesel Particulate Filter Intake Temperature - Data valid but above normal operating range
3246	0	Stop Engine	Red	3312	Aftertreatment 1 Diesel Particulate Filter Outlet Gas Temperature	Aftertreatment 1 Diesel Particulate Filter Outlet Temperature - Data valid but above normal operation
3246	2	Check Engine	Amber	3322	Aftertreatment 1 Diesel Particulate Filter Outlet Gas Temperature	Aftertreatment 1 Diesel Particulate Filter Outlet Temperature - Data is erratic, intermittent, or incorrect
3246	3	Check Engine	Amber	3319	Aftertreatment 1 Diesel Particulate Filter Outlet Gas Temperature	Aftertreatment 1 Diesel Particulate Filter Outlet Temperature Sensor Circuit - Voltage above normal, or shorted to high source

J1939 SPN	J1939 FMI	Telltale	Lamp	Cummins Fault Code	J1939_SPN Description	Detail
3246	4	Check Engine	Amber	3321	Aftertreatment 1 Diesel Particulate Filter Outlet Gas Temperature	Aftertreatment 1 Diesel Particulate Filter Outlet Temperature Sensor Circuit - Voltage below normal, or shorted to low source
3246	15	Check Engine	Amber	3256	Aftertreatment 1 Diesel Particulate Filter Outlet Gas Temperature	Aftertreatment 1 Diesel Particulate Filter Outlet Temperature - Data valid but above normal operating range
3246	16	Stop Engine	Red	3255	Aftertreatment 1 Diesel Particulate Filter Outlet Gas Temperature	Aftertreatment 1 Diesel Particulate Filter Outlet Temperature - Data valid but above normal operating range
3251	0	Stop Engine	Red	1922	Aftertreatment 1 Diesel Particulate Filter Differential Pressure	Aftertreatment Diesel Particulate Filter Differential Pressure - Data valid but above normal operating range
3251	2	Check Engine	Amber	1883	Aftertreatment 1 Diesel Particulate Filter Differential Pressure	Aftertreatment Diesel Particulate Filter Differential Pressure Sensor - Data is erratic, intermittent, or incorrect
3251	3	Check Engine	Amber	1879	Aftertreatment 1 Diesel Particulate Filter Differential Pressure	Aftertreatment Diesel Particulate Filter Differential Pressure Sensor Circuit - Voltage above normal
3251	4	Check Engine	Amber	1881	Aftertreatment 1 Diesel Particulate Filter Differential Pressure	Aftertreatment Diesel Particulate Filter Differential Pressure Sensor Circuit - Voltage below normal
3251	15	Check Engine	None	2639	Aftertreatment 1 Diesel Particulate Filter Differential Pressure	Aftertreatment Diesel Particulate Filter Differential Pressure - Data valid but above normal operating range
3251	16	Check Engine	Amber	1921	Aftertreatment 1 Diesel Particulate Filter Differential Pressure	Aftertreatment Diesel Particulate Filter Differential Pressure - Data valid but above normal operating range
3361	2	Check Engine	Amber	2976	Aftertreatment 1 Diesel Exhaust Fluid DEF Supply Module	Aftertreatment 1 Diesel Exhaust Fluid Supply Module Temperature - Data is erratic, intermittent, or incorrect
3361	3	Check Engine	Amber	3558	Aftertreatment 1 Diesel Exhaust Fluid DEF Supply Module	Aftertreatment 1 Diesel Exhaust Fluid Supply Module - Voltage above normal, or shorted to high source
3361	4	Check Engine	Amber	3559	Aftertreatment 1 Diesel Exhaust Fluid DEF Supply Module	Aftertreatment 1 Diesel Exhaust Fluid Supply Module - Voltage below normal, or shorted to low source

J1939 SPN	J1939 FMI	Telltale	Lamp	Cummins Fault Code	J1939_SPN Description	Detail
3362	31	Check Engine	Amber	1682	Aftertreatment 1 Diesel Exhaust Fluid Supply Module Input Lines	Aftertreatment 1 Diesel Exhaust Fluid Supply Module Input Lines - Condition Exists
3363	3	Check Engine	None	6479	Aftertreatment 1 Diesel Exhaust Fluid Tank 1 Heater	Aftertreatment 1 Diesel Exhaust Fluid Tank Heater - Voltage above normal, or shorted to high source
3363	4	Check Engine	None	6481	Aftertreatment 1 Diesel Exhaust Fluid Tank 1 Heater	Aftertreatment 1 Diesel Exhaust Fluid Tank Heater - Voltage below normal, or shorted to low source
3363	7	Check Engine	None	6475	Aftertreatment 1 Diesel Exhaust Fluid Tank 1 Heater	Aftertreatment 1 Diesel Exhaust Fluid Tank Heater - Mechanical system not responding or out of adjustment
3363	16	Check Engine	Amber	1713	Aftertreatment 1 Diesel Exhaust Fluid Tank 1 Heater	Aftertreatment 1 Diesel Exhaust Fluid Tank Heater - Data valid but above normal operating range - Moderately Severe Level
3363	18	Check Engine	None	6476	Aftertreatment 1 Diesel Exhaust Fluid Tank 1 Heater	Aftertreatment 1 Diesel Exhaust Fluid Tank Heater - Data valid but below normal operating range - Moderately Severe Level
3364	1	Check Engine	Amber	3866	Aftertreatment 1 Diesel Exhaust Fluid Tank 1 Quality	Aftertreatment Diesel Exhaust Fluid Quality - Data valid but below normal operational range - Most Severe Level
3364	2	Check Engine	Amber	3878	Aftertreatment 1 Diesel Exhaust Fluid Tank 1 Quality	Aftertreatment Diesel Exhaust Fluid Quality - Data is erratic, intermittent, or incorrect
3364	3	Check Engine	Amber	1686	Aftertreatment 1 Diesel Exhaust Fluid Tank 1 Quality	Aftertreatment Diesel Exhaust Fluid Quality Sensor Circuit - Voltage above normal, or shorted to high source
3364	4	Check Engine	Amber	1685	Aftertreatment 1 Diesel Exhaust Fluid Tank 1 Quality	Aftertreatment Diesel Exhaust Fluid Quality Sensor Circuit - Voltage below normal, or shorted to low source
3364	5	Check Engine	Amber	4741	Aftertreatment 1 Diesel Exhaust Fluid Tank 1 Quality	Aftertreatment Diesel Exhaust Fluid Quality Sensor Circuit - Current below normal or open circuit
3364	6	Check Engine	Amber	4742	Aftertreatment 1 Diesel Exhaust Fluid Tank 1 Quality	Aftertreatment Diesel Exhaust Fluid Quality Sensor Circuit - Current above normal or grounded circuit

J1939 SPN	J1939 FMI	Telltale	Lamp	Cummins Fault Code	J1939_SPN Description	Detail
3364	7	Check Engine	Amber	3876	Aftertreatment 1 Diesel Exhaust Fluid Tank 1 Quality	Aftertreatment Diesel Exhaust Fluid Quality Sensor - Mechanical system not responding or out of adjustment
3364	9	Check Engine	Amber	3868	Aftertreatment 1 Diesel Exhaust Fluid Tank 1 Quality	Aftertreatment Diesel Exhaust Fluid Quality - Abnormal update rate
3364	10	Check Engine	Amber	4277	Aftertreatment 1 Diesel Exhaust Fluid Tank 1 Quality	Aftertreatment Diesel Exhaust Fluid Quality - Abnormal rate of change
3364	11	Check Engine	Amber	1715	Aftertreatment 1 Diesel Exhaust Fluid Tank 1 Quality	Aftertreatment Diesel Exhaust Fluid Quality - Root cause not known
3364	12	Check Engine	Amber	3877	Aftertreatment 1 Diesel Exhaust Fluid Tank 1 Quality	Aftertreatment Diesel Exhaust Fluid Quality Sensor - Bad intelligent device or component
3364	13	Check Engine	Amber	1714	Aftertreatment 1 Diesel Exhaust Fluid Tank 1 Quality	Aftertreatment Diesel Exhaust Fluid Quality - Out of Calibration
3364	15	Check Engine	None	4842	Aftertreatment Diesel Exhaust Fluid Quality	Aftertreatment Diesel Exhaust Fluid Quality - Data valid but above normal operating range - Least Severe Level
3364	18	Check Engine	None	6752	Aftertreatment 1 Diesel Exhaust Fluid Tank 1 Quality	Aftertreatment Diesel Exhaust Fluid Quality - Data valid but below normal operating range - Moderate Severe Level
3364	19	Check Engine	Amber	4241	Aftertreatment 1 Diesel Exhaust Fluid Tank 1 Quality	Aftertreatment Diesel Exhaust Fluid Quality - Received Network Data In Error
3464	3	Check Engine	None	6493	Electronic Throttle Control Actuator Driver Circuit	Electronic Throttle Control Actuator Driver Circuit - Voltage above normal, or shorted to high source
3464	4	Check Engine	None	6494	Electronic Throttle Control Actuator Driver Circuit	Electronic Throttle Control Actuator Driver Circuit - Voltage above normal, or shorted to low source
3464	5	Check Engine	None	6496	Electronic Throttle Control Actuator Driver Circuit	Electronic Throttle Control Actuator Driver Circuit - Voltage above normal, or shorted to high source
3509	3	Check Engine	Amber	386	Sensor supply voltage 1	Sensor Supply 1 Circuit - Voltage above normal, or shorted to high source

J1939 SPN	J1939 FMI	Telltale	Lamp	Cummins Fault Code	J1939_SPN Description	Detail
3509	4	Check Engine	Amber	352	Sensor supply voltage 1	Sensor Supply 1 Circuit - Voltage below normal, or shorted to low source
3510	3	Check Engine	Amber	227	Sensor supply voltage 2	Sensor Supply 2 Circuit - Voltage above normal, or shorted to high source
3510	4	Check Engine	Amber	187	Sensor supply voltage 2	Sensor Supply 2 Circuit - Voltage below normal, or shorted to low source
3511	3	Check Engine	Amber	239	Sensor supply voltage 3	Sensor Supply 3 Circuit - Voltage above normal, or shorted to high source
3511	4	Check Engine	Amber	238	Sensor supply voltage 3	Sensor Supply 3 Circuit - Voltage below normal, or shorted to low source
3512	3	Check Engine	Amber	2185	Sensor supply voltage 4	Sensor Supply 4 Circuit - Voltage above normal, or shorted to high source
3512	4	Check Engine	Amber	2186	Sensor supply voltage 4	Sensor Supply 4 Circuit - Voltage below normal, or shorted to low source
3513	3	Check Engine	Amber	1695	Sensor supply voltage 5	Sensor Supply 5 Circuit- Voltage above normal, or shorted to high source
3513	4	Check Engine	Amber	1696	Sensor supply voltage 5	Sensor Supply 5 Circuit - Voltage below normal, or shorted to low source
3514	3	Check Engine	Amber	515	Sensor supply voltage 6	Sensor Supply 6 Circuit - Voltage above normal, or shorted to high source
3514	4	Check Engine	Amber	516	Sensor supply voltage 6	Sensor Supply 6 Circuit - Voltage below normal, or shorted to low source
3515	5	Check Engine	Amber	4743	Aftertreatment 1 Diesel Exhaust Fluid Temperature 2	Aftertreatment 1 Diesel Exhaust Fluid Temperature 2 Sensor Circuit - Current below normal or open circuit
3515	6	Check Engine	Amber	4744	Aftertreatment 1 Diesel Exhaust Fluid Temperature 2	Aftertreatment 1 Diesel Exhaust Fluid Temperature 2 Sensor Circuit - Current above normal or grounded
3515	10	Check Engine	None	6619	Aftertreatment 1 Diesel Exhaust Fluid Temperature 2	Aftertreatment 1 Diesel Exhaust Fluid Temperature 2 - Abnormal Rate of Change
3515	11	Check Engine	Amber	4745	Aftertreatment 1 Diesel Exhaust Fluid Temperature 2	Aftertreatment 1 Diesel Exhaust Fluid Temperature 2 - Root Cause Not Known

J1939 SPN	J1939 FMI	Telltale	Lamp	Cummins Fault Code	J1939_SPN Description	Detail
3521	11	Check Engine	Amber	4768	Aftertreatment 1 Diesel Exhaust Fluid Property	Aftertreatment 1 Diesel Exhaust Fluid Property - Root Cause Not Known
3597	2	Check Engine	None	1117	ECU Power Output Supply Voltage #1	Power Supply Lost With Ignition On - Data is erratic, intermittent, or incorrect
3597	12	Check Engine	Amber	351	ECU Power Output Supply Voltage #1	Injector Power Supply - Bad intelligent device or component
3597	17	Check Engine	None	6499	ECU Power Output Supply Voltage #1	ECU Power Output Supply Voltage 1 - Data valid but below normal operating range - Moderately Severe Level
3597	18	Check Engine	Amber	1938	ECU Power Output Supply Voltage #1	ECU Power Output Supply Voltage 1 - Data valid but below normal operating range - Moderately Severe Level
3610	2	Check Engine	None	6553	Aftertreatment Diesel Particulate Filter Outlet Pressure	Aftertreatment 1 Diesel Particulate Filter Outlet Pressure - Data is erratic, intermittent, or incorrect
3610	3	Check Engine	None	6551	Aftertreatment Diesel Particulate Filter Outlet Pressure	Aftertreatment 1 Diesel Particulate Filter Outlet Pressure Sensor Circuit - Voltage above normal, or shorted to high source
3610	4	Check Engine	None	6552	Aftertreatment Diesel Particulate Filter Outlet Pressure	Aftertreatment 1 Diesel Particulate Filter Outlet Pressure Sensor Circuit - Voltage below normal, or shorted to low source
3667	2	Stop Engine	Red	5221	Engine Air Shutoff Status	Engine Air Shutoff Status - Data is erratic, intermittent, or incorrect
3667	3	Check Engine	Amber	3139	Engine Air Shutoff Status	Engine Air Shutoff Circuit - Voltage above normal, or shorted to high source
3667	4	Check Engine	Amber	3141	Engine Air Shutoff Status	Engine Air Shutoff Circuit - Voltage below normal, or shorted to low source
3667	7	Stop Engine	Red	4484	Engine Air Shutoff	Engine Air Shutoff - Mechanical System Not Responding or Out of Adjustment
3695	2	Check Engine	None	6568	Aftertreatment Regeneration Inhibit Switch	Aftertreatment Regeneration Inhibit Switch - Data is erratic, intermittent, or incorrect
3703	31	Check Engine	Amber (Blinking)	2777	Diesel Particulate Filter Active Regeneration Inhibited Due to Inhibit Switch	Particulate Trap Active Regeneration Inhibited Due to Inhibit Switch - Condition Exists

J1939 SPN	J1939 FMI	Telltale	Lamp	Cummins Fault Code	J1939_SPN Description	Detail
3713	31	Check Engine	Amber	6596	Diesel Particulate Filter Active Regeneration Inhibited Due to	Diesel Particulate Filter Active Regeneration Inhibited Due to System Timeout - Condition exists
3750	14	Check Engine	Amber	5938	Diesel Particulate Filter 1 Conditions Not Met for Active Regeneration	Diesel Particulate Filter 1 Conditions Not Met for Active Regeneration – Condition exists
3936	7	Check Engine	None	6265	Aftertreatment 1 Diesel Particulate Filter System	Aftertreatment 1 Diesel Particulate Filter System - Mechanical system not responding or out of adjustment
3936	14	Stop Engine	Red	4584	Aftertreatment Diesel Particulate Filter System	Aftertreatment Diesel Particulate Filter System - Special Instructions
3936	15	Check Engine	Amber	1981	Aftertreatment Diesel Particulate Filter System	Aftertreatment 1 Diesel Particulate Filter System - Data valid but above normal operating range - Level
4094	31	Check Engine	Amber	3543	NOx limits exceeded due to Insufficient Diesel Exhaust Fluid Quality	NOx limits exceeded due to Insufficient Reagent Quality - Condition Exists
4096	31	Check Engine	Amber	3547	NOx limits exceeded due to Empty Diesel Exhaust Fluid Tank	Aftertreatment Diesel Exhaust Fluid Tank Empty - Condition Exists
4185	31	Check Engine	Amber	1427	Overspeed Shutdown Relay Driver	Overspeed Shutdown Relay Driver Diagnostic has detected an error - Condition Exists
4186	31	Check Engine	Amber	1428	Low Oil Pressure Shutdown Relay Driver	Low Oil Pressure (LOP) Shutdown Relay Driver Diagnostic has detected an error - Condition Exists
4187	31	Check Engine	Amber	1429	High Engine Temperature Shutdown Relay Driver	High Engine Temperature (HET) Shutdown Relay Driver Diagnostic has detected an error - Condition Exists
4188	31	Check Engine	Amber	1431	Pre-Low Oil Pressure Indicator Relay Driver	Pre-Low Oil Pressure Warning Relay Driver Diagnostic has detected an error - Condition exists
4223	31	Check Engine	Amber	1432	Pre-High Engine Temperature Warning Relay Driver	Pre-High Engine Temperature Warning Relay Driver Diagnostic has detected an error - Condition exists
4334	2	Check Engine	Amber	3596	Aftertreatment 1 Diesel Exhaust Fluid Doser Absolute Pressure	Aftertreatment 1 Diesel Exhaust Fluid Pressure Sensor - Data is erratic, intermittent, or incorrect

J1939 SPN	J1939 FMI	Telltale	Lamp	Cummins Fault Code	J1939_SPN Description	Detail
4334	3	Check Engine	Amber	3571	Aftertreatment 1 Diesel Exhaust Fluid Doser Absolute Pressure	Aftertreatment 1 Diesel Exhaust Fluid Pressure Sensor - Voltage above normal, or shorted to high source
4334	4	Check Engine	Amber	3572	Aftertreatment 1 Diesel Exhaust Fluid Doser Absolute Pressure	Aftertreatment 1 Diesel Exhaust Fluid Pressure Sensor - Voltage below normal, or shorted to low source
4334	16	Check Engine	Amber	3575	Aftertreatment 1 Diesel Exhaust Fluid Doser Absolute Pressure	Aftertreatment 1 Diesel Exhaust Fluid Pressure Sensor - Data valid but above normal operating range
4334	18	Check Engine	Amber	3574	Aftertreatment 1 Diesel Exhaust Fluid Doser Absolute Pressure	Aftertreatment 1 Diesel Exhaust Fluid Pressure Sensor - Data Valid But Below Normal Operating Range
4337	10	Check Engine	Amber	4249	Aftertreatment 1 Diesel Exhaust Fluid Dosing Temperature	Aftertreatment 1 Diesel Exhaust Fluid Dosing Temperature - Abnormal Rate of Change
4340	3	Check Engine	None	6531	Aftertreatment 1 Diesel Exhaust Fluid Line Heater 1 State	Aftertreatment 1 Diesel Exhaust Fluid Line Heater 1 Circuit - Voltage above normal, or shorted to high source
4340	4	Check Engine	None	6532	Aftertreatment 1 Diesel Exhaust Fluid Line Heater 1 State	Aftertreatment 1 Diesel Exhaust Fluid Line Heater 1 Circuit - Voltage below normal, or shorted to low source
4340	5	Check Engine	None	6482	Aftertreatment 1 Diesel Exhaust Fluid Line Heater 1 State	Aftertreatment 1 Diesel Exhaust Fluid Line Heater 1 Circuit - Current below normal or open circuit
4342	3	Check Engine	None	6533	Aftertreatment 1 Diesel Exhaust Fluid Line Heater 2 State	Aftertreatment 1 Diesel Exhaust Fluid Line Heater 2 Circuit - Voltage above normal, or shorted to high source
4342	4	Check Engine	None	6534	Aftertreatment 1 Diesel Exhaust Fluid Line Heater 2 State	Aftertreatment 1 Diesel Exhaust Fluid Line Heater 2 Circuit - Voltage below normal, or shorted to low source
4342	5	Check Engine	None	6483	Aftertreatment 1 Diesel Exhaust Fluid Line Heater 2 State	Aftertreatment 1 Diesel Exhaust Fluid Line Heater 2 Circuit - Current below normal or open circuit
4344	3	Check Engine	None	6535	Aftertreatment 1 Diesel Exhaust Fluid Line Heater 3 State	Aftertreatment Diesel Exhaust Fluid Line Heater 3 Circuit - Voltage above normal, or shorted to high source

J1939 SPN	J1939 FMI	Telltale	Lamp	Cummins Fault Code	J1939_SPN Description	Detail
4344	4	Check Engine	None	6536	Aftertreatment 1 Diesel Exhaust Fluid Line Heater 3 State	Aftertreatment Diesel Exhaust Fluid Line Heater 3 Circuit - Voltage below normal, or shorted to low source
4344	5	Check Engine	None	6484	Aftertreatment 1 Diesel Exhaust Fluid Line Heater 3 State	Aftertreatment Diesel Exhaust Fluid Line Heater 3 Circuit - Current below normal or open circuit
4360	0	Stop Engine	Red	3229	Aftertreatment 1 SCR Catalyst Intake Gas Temperature	Aftertreatment 1 SCR Intake Temperature - Data valid but above normal operational range - Most Severe Level
4360	2	Check Engine	Amber	3144	Aftertreatment 1 SCR Catalyst Intake Gas Temperature	Aftertreatment 1 SCR Intake Temperature Sensor - Data is erratic, intermittent, or incorrect
4360	3	Check Engine	Amber	3142	Aftertreatment 1 SCR Catalyst Intake Gas Temperature	Aftertreatment 1 SCR Intake Temperature Sensor Circuit - Voltage above normal, or shorted to high source
4360	4	Check Engine	Amber	3143	Aftertreatment 1 SCR Catalyst Intake Gas Temperature	Aftertreatment 1 SCR Intake Temperature Sensor Circuit - Voltage below normal, or shorted to low source
4360	15	Check Engine	None	3164	Aftertreatment 1 SCR Catalyst Intake Gas Temperature	Aftertreatment 1 SCR Intake Temperature - Data valid but above normal operating range - Least Severe
4360	16	Stop Engine	Red	3231	Aftertreatment 1 SCR Catalyst Intake Gas Temperature	Aftertreatment 1 SCR Intake Temperature - Data valid but above normal operating range - Moderately Severe Level
4363	0	Stop Engine	Red	3165	Aftertreatment 1 SCR Catalyst Outlet Gas Temperature	Aftertreatment 1 SCR Outlet Temperature - Data valid but above normal operational range - Most Severe
4363	2	Check Engine	Amber	3148	Aftertreatment 1 SCR Catalyst Outlet Gas Temperature	Aftertreatment 1 SCR Outlet Temperature Sensor - Data is erratic, intermittent, or incorrect
4363	3	Check Engine	None	6569	Aftertreatment 1 SCR Catalyst Outlet Gas Temperature	Aftertreatment 1 SCR Outlet Temperature Sensor Circuit - Voltage above normal, or shorted to high source
4363	4	Check Engine	None	6571	Aftertreatment 1 SCR Catalyst Outlet Gas Temperature	Aftertreatment 1 SCR Outlet Temperature Sensor Circuit - Voltage below normal, or shorted to low source

J1939 SPN	J1939 FMI	Telltale	Lamp	Cummins Fault Code	J1939_SPN Description	Detail
4363	16	Stop Engine	Red	3235	Aftertreatment 1 SCR Catalyst Outlet Gas Temperature	Aftertreatment 1 SCR Outlet Temperature - Data valid but above normal operating range - Moderately Severe Level
4364	17	Check Engine	None	6517	Aftertreatment 1 SCR Conversion Efficiency	Aftertreatment SCR Catalyst Conversion Efficiency - Data valid but below normal operating range - Moderately Severe Level
4364	18	Check Engine	Amber	3582	Aftertreatment 1 SCR Conversion Efficiency	Aftertreatment SCR Catalyst Conversion Efficiency - Data valid but below normal operating range - Moderately Severe Level
4376	3	Check Engine	Amber	3577	Aftertreatment 1 Diesel Exhaust Fluid Return Valve	Aftertreatment Diesel Exhaust Fluid Return Valve - Voltage above normal, or shorted to high source
4376	4	Check Engine	Amber	3578	Aftertreatment 1 Diesel Exhaust Fluid Return Valve	Aftertreatment Diesel Exhaust Fluid Return Valve - Voltage below normal, or shorted to low source
4376	7	Check Engine	None	6527	Aftertreatment 1 Diesel Exhaust Fluid Return Valve	Aftertreatment Diesel Exhaust Fluid Return Valve - Mechanical system not responding or out of adjust
4765	2	Check Engine	None	6539	Aftertreatment Diesel Oxidation Catalyst Intake Temperature	Aftertreatment 1 Diesel Oxidation Catalyst Intake Temperature - Data is erratic, intermittent, or incorrect
4765	3	Check Engine	Amber	3314	Aftertreatment Diesel Oxidation Catalyst Intake Temperature	Aftertreatment 1 Diesel Oxidation Catalyst Intake Temperature Sensor Circuit - Voltage above normal, or shorted to high source
4765	4	Check Engine	Amber	3313	Aftertreatment Diesel Oxidation Catalyst Intake Temperature	Aftertreatment 1 Diesel Oxidation Catalyst Intake Temperature Sensor Circuit - Voltage below normal, or shorted to low source
4765	16	Stop Engine	Red	3251	Aftertreatment Diesel Oxidation Catalyst Intake Temperature	Aftertreatment 1 Diesel Oxidation Catalyst Intake Temperature - Data valid but above normal operating range
4766	0	Stop Engine	Red	5387	Aftertreatment 1 Diesel Oxidation Catalyst Outlet Gas Temperature	Aftertreatment 1 Diesel Oxidation Catalyst Outlet Gas Temperature - Data valid but above normal operating range - Most Severe Level
4766	2	Check Engine	Amber	5386	Aftertreatment 1 Diesel Oxidation Catalyst Outlet Gas Temperature	Aftertreatment 1 Diesel Oxidation Catalyst Outlet Gas Temperature - Data is erratic, intermittent, or Incorrect

J1939 SPN	J1939 FMI	Telltale	Lamp	Cummins Fault Code	J1939_SPN Description	Detail
4766	3	Check Engine	Amber	4533	Aftertreatment 1 Diesel Oxidation Catalyst Outlet Gas Temperature Sensor Circuit	Aftertreatment 1 Diesel Oxidation Catalyst Outlet Gas Temperature Sensor Circuit - Voltage above normal, or shorted to high source
4766	4	Check Engine	Amber	4534	Aftertreatment 1 Diesel Oxidation Catalyst Outlet Gas Temperature Sensor Circuit	Aftertreatment 1 Diesel Oxidation Catalyst Outlet Gas Temperature Sensor Circuit - Voltage below normal, or shorted to low source
4766	15	Check Engine	Amber	5389	Aftertreatment 1 Diesel Oxidation Catalyst Outlet Gas Temperature	Aftertreatment 1 Diesel Oxidation Catalyst Outlet Gas Temperature - Data valid but above normal operating range - Least Severe Level
4766	16	Stop Engine	Red	5388	Aftertreatment 1 Diesel Oxidation Catalyst Outlet Gas Temperature	Aftertreatment 1 Diesel Oxidation Catalyst Outlet Gas Temperature - Data valid but above normal operating range - Moderately Severe Level
4792	7	Check Engine	None	3751	Aftertreatment SCR Catalyst System	Aftertreatment SCR Catalyst System - Mechanical system not responding or out of adjustment
4792	14	Stop Engine	Red	4585	Aftertreatment 1 SCR Catalyst System	Aftertreatment 1 SCR Catalyst System - Special Instructions
4794	31	Check Engine	Amber	3151	Aftertreatment 1 SCR Catalyst System	Aftertreatment 1 SCR Catalyst System Missing - Condition exists
4795	31	Check Engine	Amber	1993	Aftertreatment 1 Diesel Particulate Filter Missing	Aftertreatment 1 Diesel Particulate Filter Missing - Condition exists
4796	31	Check Engine	None	6621	Aftertreatment 1 Diesel Oxidation Catalyst Missing	Aftertreatment 1 Diesel Oxidation Catalyst Missing - Condition exists
5018	11	Check Engine	None	2637	Aftertreatment Diesel Oxidation Catalyst	Aftertreatment 1 Diesel Oxidation Catalyst Face Plugged - Root cause not known
5024	10	Check Engine	Amber	3649	Aftertreatment 1 Intake Gas NOx Sensor Heater Ratio	Aftertreatment 1 Intake NOx Sensor Heater - Abnormal rate of change
5031	10	Check Engine	None	6581	Aftertreatment 1 Outlet Gas NOx Sensor Heater Ratio	Aftertreatment 1 Outlet NOx Sensor Heater - Abnormal rate of change
5125	3	Check Engine	Amber	3419	Sensor supply voltage 7	Sensor Supply 7 Circuit - Voltage above normal, or shorted to high source
5125	4	Check Engine	Amber	3421	Sensor supply voltage 7	Sensor Supply 7 Circuit - Voltage below normal, or shorted to low source

J1939 SPN	J1939 FMI	Telltale	Lamp	Cummins Fault Code	J1939_SPN Description	Detail
5245	31	Check Engine	Amber	4863	Aftertreatment Selective Catalytic Reduction Operator Inducement Active	Aftertreatment Diesel Exhaust Fluid Tank Low Level Indicator
5246	0	Stop Engine	Red	3712	Aftertreatment SCR Operator Inducement Severity	Aftertreatment SCR Operator Inducement - Data valid but above normal operational range - Most Severe Level
5298	17	Check Engine	None	2638	Aftertreatment 1 Diesel Oxidation Catalyst Conversion Efficiency	Aftertreatment 1 Diesel Oxidation Catalyst Conversion Efficiency - Data valid but below normal operating range - Moderately Severe Level
5298	18	Check Engine	Amber	1691	Aftertreatment 1 Diesel Oxidation Catalyst Conversion Efficiency	Aftertreatment 1 Diesel Oxidation Catalyst Conversion Efficiency - Data valid but below normal operating range - Moderately Severe Level
5319	31	Check Engine	Amber	3376	Aftertreatment 1 Diesel Particulate Filter Incomplete Regeneration	Aftertreatment Diesel Particulate Filter Incomplete Regeneration - Condition Exists
5394	2	Check Engine	None	3755	Aftertreatment Diesel Exhaust Fluid Dosing Valve	Aftertreatment Diesel Exhaust Fluid Dosing Valve - Data is erratic, intermittent, or incorrect
5394	5	Check Engine	Amber	3567	Aftertreatment Diesel Exhaust Fluid Dosing Valve	Aftertreatment Diesel Exhaust Fluid Dosing Valve - Current below normal or open circuit
5394	7	Check Engine	Amber	3568	Aftertreatment Diesel Exhaust Fluid Dosing Valve	Aftertreatment Diesel Exhaust Fluid Dosing Valve - Mechanical system not responding or out of adjustment
5397	31	Check Engine	Amber	3375	Aftertreatment 1 Diesel Particulate Filter Regeneration too Frequent	Aftertreatment Diesel Particulate Filter Regeneration too Frequent - Condition Exists
5484	3	Check Engine	None	6456	Engine Fan Clutch 2 Output Device Driver	Engine Fan Clutch 2 Control Circuit - Voltage above normal, or shorted to high source
5484	4	Check Engine	None	6457	Engine Fan Clutch 2 Output Device Driver	Engine Fan Clutch 2 Control Circuit - Voltage below normal, or shorted to low source
5491	3	Check Engine	None	6477	Aftertreatment 1 Diesel Exhaust Fluid Line Heater Relay	Aftertreatment Diesel Exhaust Fluid Line Heater Relay - Voltage above normal, or shorted to high source

J1939 SPN	J1939 FMI	Telltale	Lamp	Cummins Fault Code	J1939_SPN Description	Detail
5491	4	Check Engine	None	6478	Aftertreatment 1 Diesel Exhaust Fluid Line Heater Relay	Aftertreatment Diesel Exhaust Fluid Line Heater Relay - Voltage below normal, or shorted to low source
5491	7	Check Engine	None	6537	Aftertreatment 1 Diesel Exhaust Fluid Line Heater Relay	Aftertreatment 1 Diesel Exhaust Fluid Line Heater Relay - Mechanical system not responding or out of adjustment
5571	0	Check Engine	Amber	3741	High-Pressure Common Rail Fuel Pressure Relief Valve	High-Pressure Common Rail Fuel Pressure Relief Valve - Data valid but above normal operational range
5571	3	Check Engine	Amber	4262	High-Pressure Common Rail Fuel Pressure Relief Valve	High-Pressure Common Rail Fuel Pressure Relief Valve - Voltage Above Normal, or Shorted to High Source
5571	4	Check Engine	Amber	4263	High-Pressure Common Rail Fuel Pressure Relief Valve	High-Pressure Common Rail Fuel Pressure Relief Valve - Voltage below normal, or shorted to low source
5571	7	Check Engine	None	3727	High-Pressure Common Rail Fuel Pressure Relief Valve	High-Pressure Common Rail Fuel Pressure Relief Valve - Mechanical system not responding or out of adjustment
5571	15	Check Engine	Amber	5585	High-Pressure Common Rail Fuel Pressure Relief Valve	High-Pressure Common Rail Fuel Pressure Relief Valve - Data valid but above normal operating range - Least Severe Level
5571	31	Check Engine	Amber	4867	High-Pressure Common Rail Fuel Pressure Relief Valve	High-Pressure Common Rail Fuel Pressure Relief Valve - Condition Exists
5603	9	Check Engine	None	3843	Cruise Control Disable Command	Cruise Control Disable Command - Abnormal update rate
5603	31	Check Engine	None	3845	Cruise Control Disable Command	Cruise Control Disable Command - Condition Exists
5605	31	Check Engine	None	3844	Cruise Control Pause Command	Cruise Control Pause Command - Condition Exists
5742	3	Check Engine	Amber	4161	Aftertreatment Diesel Particulate Filter Temperature Sensor Module	Aftertreatment Diesel Particulate Filter Temperature Sensor Module - Voltage Above Normal, or Shorted to high source
5742	4	Check Engine	Amber	4162	Aftertreatment Diesel Particulate Filter Temperature Sensor Module	Aftertreatment Diesel Particulate Filter Temperature Sensor Module - Voltage below normal, or shorted to low source

J1939 SPN	J1939 FMI	Telltale	Lamp	Cummins Fault Code	J1939_SPN Description	Detail
5742	9	Check Engine	Amber	4151	Aftertreatment Diesel Particulate Filter Temperature Sensor Module	Aftertreatment Diesel Particulate Filter Temperature Sensor Module - Abnormal update rate
5742	11	Check Engine	Amber	4259	Aftertreatment Diesel Particulate Filter Temperature Sensor Module	Aftertreatment Diesel Particulate Filter Temperature Sensor Module - Root Cause Not Known
5742	12	Check Engine	Amber	4158	Aftertreatment Diesel Particulate Filter Temperature Sensor Module	Aftertreatment Diesel Particulate Filter Temperature Sensor Module - Bad intelligent device or component
5742	16	Check Engine	Amber	4163	Aftertreatment Diesel Particulate Filter Temperature Sensor Module	Aftertreatment Diesel Particulate Filter Temperature Sensor Module - Data valid but above normal operating range
5743	3	Check Engine	Amber	4164	Aftertreatment Selective Catalytic Reduction Temperature Sensor Module	Aftertreatment Selective Catalytic Reduction Temperature Sensor Module - Voltage Above Normal, or Shorted to high source
5743	4	Check Engine	Amber	4165	Aftertreatment Selective Catalytic Reduction Temperature Sensor Module	Aftertreatment Selective Catalytic Reduction Temperature Sensor Module - Voltage below normal, or Shorted to low source
5743	9	Check Engine	Amber	4152	Aftertreatment Selective Catalytic Reduction Temperature Sensor Module	Aftertreatment Selective Catalytic Reduction Temperature Sensor Module - Abnormal update rate
5743	11	Check Engine	Amber	4261	Aftertreatment Selective Catalytic Reduction Temperature Sensor Module	Aftertreatment Selective Catalytic Reduction Temperature Sensor Module - Root Cause Not Known
5743	12	Check Engine	Amber	4159	Aftertreatment Selective Catalytic Reduction Temperature Sensor Module	Aftertreatment Selective Catalytic Reduction Temperature Sensor Module - Bad intelligent device or component
5743	16	Check Engine	Amber	4166	Aftertreatment Selective Catalytic Reduction Temperature Sensor Module	Aftertreatment Selective Catalytic Reduction Temperature Sensor Module - Data valid, but above normal
5745	3	Check Engine	Amber	4168	Aftertreatment 1 Diesel Exhaust Fluid Supply Module Heater	Aftertreatment 1 Diesel Exhaust Fluid Supply Module Heater - Voltage above normal, or shorted to high
5745	4	Check Engine	Amber	4169	Aftertreatment 1 Diesel Exhaust Fluid Supply Module Heater	Aftertreatment 1 Diesel Exhaust Fluid Supply Module Heater - Voltage below normal, or shorted to low source

J1939 SPN	J1939 FMI	Telltale	Lamp	Cummins Fault Code	J1939_SPN Description	Detail
5745	17	Check Engine	None	6513	Aftertreatment 1 Diesel Exhaust Fluid Supply Module Heater	Aftertreatment 1 Diesel Exhaust Fluid Supply Module Heater - Data valid, but below normal operating range
5745	18	Check Engine	Amber	4171	Aftertreatment 1 Diesel Exhaust Fluid Supply Module Heater	Aftertreatment 1 Diesel Exhaust Fluid Supply Module Heater - Data valid, but below normal operating range
5746	3	Check Engine	None	6529	Aftertreatment 1 Diesel Exhaust Fluid Supply Module Heater Relay	Aftertreatment 1 Diesel Exhaust Fluid Supply Module Heater Relay - Voltage above normal, or shorted to high source
5746	4	Check Engine	Amber	4156	Aftertreatment 1 Diesel Exhaust Fluid Supply Module Heater Relay	Aftertreatment 1 Diesel Exhaust Fluid Supply Module Heater Relay - Voltage below normal, or shorted to low source
5798	10	Check Engine	Amber	4251	Aftertreatment 1 Diesel Exhaust Fluid Supply Module Heater Temperature	Aftertreatment 1 Diesel Exhaust Fluid Supply Module Heater Temperature - Abnormal Rate of Change
6655	3	Check Engine	None	6511	ECU Power Lamp	Maintain ECU Power Lamp - Voltage above normal, or shorted to high source
6655	4	Check Engine	None	6512	ECU Power Lamp	Maintain ECU Power Lamp - Voltage below normal, or shorted to low source
6713	9	Check Engine	Amber	5177	VGT Actuator Driver Circuit	VGT Actuator Driver Circuit - Abnormal update rate
6713	13	Stop Engine	Red	4956	Variable Geometry Turbocharger Actuator	Variable Geometry Turbocharger Actuator Software - Out of Calibration
6713	31	Stop Engine	Red	4957	Variable Geometry Turbocharger Actuator	Variable Geometry Turbocharger Actuator Software - Condition exists
6799	2	Check Engine	None	6473	Engine Fan Blade Pitch	Fan Blade Pitch - Mechanical system not responding or out of adjustment
6799	3	Check Engine	None	6471	Engine Fan Blade Pitch	Fan Blade Pitch Position Sensor Circuit - Voltage above normal, or shorted to high source
6799	4	Check Engine	None	6472	Engine Fan Blade Pitch	Fan Blade Pitch Position Sensor Circuit - Voltage below normal, or shorted to low source
6799	7	Check Engine	Amber	5185	Engine Fan Blade Pitch	Fan Blade Pitch - Mechanical system not responding or out of adjustment

J1939 SPN	J1939 FMI	Telltale	Lamp	Cummins Fault Code	J1939_SPN Description	Detail
6802	31	Check Engine	Amber	5278		Aftertreatment 1 Diesel Exhaust Fluid Dosing System Frozen - Condition Exists
6881	9	Check Engine	Amber	5653	SCR Operator Inducement Override Switch	SCR Operator Inducement Override Switch - Abnormal Update Rate
6881	13	Check Engine	Amber	5654	SCR Operator Inducement Override Switch	SCR Operator Inducement Override Switch - Out of Calibration
6882	3	Check Engine	Amber	5393	Aftertreatment Diesel Oxidation Catalyst Temperature Sensor Module	Aftertreatment Diesel Oxidation Catalyst Temperature Sensor Module - Voltage above normal or shorted to high source
6882	4	Check Engine	Amber	5394	Aftertreatment Diesel Oxidation Catalyst Temperature Sensor Module	Aftertreatment Diesel Oxidation Catalyst Temperature Sensor Module - Voltage below normal or shorted to low source
6882	9	Check Engine	Amber	5391	Aftertreatment Diesel Oxidation Catalyst Temperature Sensor Module	Aftertreatment Diesel Oxidation Catalyst Temperature Sensor Module - Abnormal update rate
6882	11	Check Engine	Amber	5395	Aftertreatment Diesel Oxidation Catalyst Temperature Sensor Module	Aftertreatment Diesel Oxidation Catalyst Temperature Sensor Module - Root cause not known
6882	12	Check Engine	Amber	5392	Aftertreatment Diesel Oxidation Catalyst Temperature Sensor Module	Aftertreatment Diesel Oxidation Catalyst Temperature Sensor Module - Bad Intelligent Device or Component
6882	16	Check Engine	Amber	5396	Aftertreatment Diesel Oxidation Catalyst Temperature Sensor Module	Aftertreatment Diesel Oxidation Catalyst Temperature Sensor Module - Data valid but above normal operating range - Moderately Severe Level
6918	31	Check Engine	Mainte-nance	5632	SCR System Cleaning Inhibited Due to Inhibit Switch	SCR System Cleaning Inhibited Due to Inhibit Switch - Condition exists
6928	31	Check Engine	Amber	6597	SCR System Cleaning Inhibited Due to System Timeout	SCR System Cleaning Inhibited Due to System Timeout - Condition exists
7848	31	Check Engine	Amber	6634	Diesel Particulate Filter 1 Conditions Not Met for Active Regeneration	Diesel Particulate Filter 1 Conditions Not Met for Active Regeneration - Condition exists
520808	31	Check Engine	Amber	5291	Engine Emergency Shutdown Switch Activated	Engine Emergency Shutdown Switch Activated - Condition exists

J1939 SPN	J1939 FMI	Telltale	Lamp	Cummins Fault Code	J1939_SPN Description	Detail
520809	31	Check Engine	Amber	5292	Excessive Time Since Last Engine Air Shutoff Maintenance Test	Excessive Time Since Last Engine Air Shutoff Maintenance Test - Condition exists
520968	9	Check Engine	Amber	5939		Machine Constrained Operation - Abnormal Update Rate. No Communication or an invalid data transfer rate has been detected on the J1939 data link between the ECM and the machine electronic unit.
520968	19	Check Engine	None	5941		Machine Constrained Operation - Received Network Data in Error. The received J1939 datalink message was not valid.
524286	31	Check Engine	Amber	5617	Aftertreatment 1 Diesel Oxidation Catalyst System	Aftertreatment 1 Diesel Oxidation Catalyst System - Special Instruction

Index

A

A Series headers
  definition 29
A40DX Auger Headers
  auger run screens 245
    run screen 1 245
    run screen 2 246
  auger speed
    adjusting 232
  connecting hydraulics 149
  detaching from windrower 150
  disc speed switch 73
  float options with fixed deck 243
  knife speed 238
    adjusting knife alarm pressure 240
    adjusting knife speed alarm 241
    setting knife speed while moving 239
  mechanically connecting to M1 Series 143
  operating 232
  reel speed
    adjusting 232
    adjusting reel alarm pressure 237
    setting reel speed in auto mode 232
    setting reel speed in manual mode 234
aftertreatment functions
  activating 122
air conditioning
  cleaning evaporator core 346
  compressor
    replacing belts 353
    tensioning belts 275, 352
  filters
    fresh air intake filter 293
      inspecting and cleaning 294
      installing filter 295
      removing filter 293
  installing cover 347
  removing cover 345
  testing/troubleshooting
    cab air 401
air conditioning box connectors
  welding precautions 9
air filters, *See* filters
alarm volume 91
annual service 110
anti-shimmy dampeners
  location 36
antifreeze 347
API
  definition 29
ASTM
  definition 29
attaching/detaching headers
  A40DX Auger Headers
    attaching to windrower 143
    connecting hydraulics 149
    detaching from windrower 150
  D1X or D1XL Series Draper Headers
    attaching draper header supports 154
    connecting center-link 155
    connecting hydraulics 160
    detaching from windrower 162
  D1XL Series Draper Headers
    hydraulic center-link with optional self-alignment kit 155
    hydraulic center-link without self-alignment kit 155
  R113 Rotary Disc Headers
    attaching to windrower 177
    connecting hydraulics 182
    detaching from windrower 187
  R85 4.9 m (16 ft.) Rotary Disc Headers
    attaching to windrower 167
    connecting hydraulics 172
    detaching from windrower 174
auger alarm pressure
  adjusting 237
auger pressure
  viewing 245
auger speed
  A40DX Auger Headers
    adjusting 232
  viewing 245–246
automated steering systems 385
  autosteer engagement button 69, 71
autosteer, *See* automated steering systems

B

back switch 71
ballast kits 389
batteries
  auxiliary power posts 342
  battery cable 336
  battery cover
    closing 334
    opening 333
  battery safety 8
  battery specification 333
  boosting 336
  charging 335
  connecting 340
  disconnecting 340
  installing 339

maintaining 333
removing 338
troubleshooting 395
welding precautions 9
beacon lights 55
location 36
switch 52
belts 351
A/C compressor belt
replacing 353
engine fan drive belt
replacing 351
tensioning 351
seat belts 49
tensioning A/C compressor belt 275, 352
Bluetooth® feature 64
bolts
definition 29
booster spring kit 386
break-in inspection schedule 264
break-in period 110

C

cab
entering 124
exiting 124
specifications 32
troubleshooting cab air 401
cab connectors
welding precautions 9
cab temperature, *See* HVAC systems
cab-forward
definition 29
calibration
header 94
windrower 94
caster wheels, *See* wheels and tires
center-links
definition 29
location 36
self-locking center-link hook mechanism 201
CGVW
definition 29
charge filter 280
charge filters
installing 281
chassis extension module
welding precautions 9
chassis relay module
welding precautions 9
circuit breakers
accessing circuit breakers 367
replacing 369
climate controls 59–60, 77
See also HVAC systems
component locations 36
compressor
replacing compressor belts 353
tensioning belts 275, 352
consoles 39
conversion chart 413
conversion kit for disc ready to disc, auger, and draper ready 386
conveyor speed adjustment buttons 76
coolant
adding to engine 328
checking level in engine 288
coolant temperature gauges 77
cutting height 202

D

D1X Series
definition 29
D1X Series Draper Headers
adjusting reel alarm pressure 213
attaching to windrower
connecting hydraulics 160
draper header supports 154
deck shift 225
deck shift control 225
float options with deck shift 226
setting float options 226
detaching from windrower
units with hydraulic center-link 162
draper run screens 228
run screen 1 228
run screen 2 229
draper speed
adjusting 215
adjusting draper alarm pressure 218
draper slip warning 220
setting draper speed in auto mode 215
setting draper speed in manual mode 217
header float
float options with deck shift 226
header position
leveling the header 208
hydraulic center-link with optional self-alignment kit
attaching to M1240 155
hydraulic center-link without self-alignment kit
attaching to M1240 155
knife speed 220
knife speed alarm
adjusting alarm 224
adjusting pressure 222
setting knife speed 221
operating 207
reel speed

adjusting reel speed 210
setting reel speed in auto mode 210
setting reel speed in manual mode 212
D1XL Series
definition 29
D1XL Series Draper Headers
adjusting reel alarm pressure 213
attaching to windrower
connecting hydraulics 160
draper header supports 154
deck shift 225
deck shift control 225
float options with deck shift 226
setting float options 226
detaching from windrower
units with hydraulic center-link 162
draper run screens 228
run screen 1 228
run screen 2 229
draper speed
adjusting 215
adjusting draper alarm pressure 218
draper slip warning 220
setting draper speed in auto mode 215
setting draper speed in manual mode 217
header float
float options with deck shift 226
header position 207
leveling the header 208
reel fore-aft position 207
reel height 207
hydraulic center-link with optional self-alignment kit
attaching to M1240 155
hydraulic center-link without self-alignment kit
attaching to M1240 155
knife speed 220
knife speed alarm
adjusting alarm 224
adjusting pressure 222
setting knife speed 221
operating 207
reel speed
adjusting reel speed 210
setting reel speed in auto mode 210
setting reel speed in manual mode 212
date
setting on HPT 92
decals
fuse box and relay module decals 370
GSL header switch functions 71
location of safety signs 17
deck shift 74, 225
controls 75
deck shift control 225
DEF, *See* diesel exhaust fluid system
DEF gauges 77
definition of terms 29
diesel exhaust fluid system
DEF tank
draining the tank 350
filling the tank 113, 290
exhaust system cleaning 121
filters
changing vent hose filter 332
supply module filter 323
checking filter 323
cleaning and inspecting filter 325
installing filter 326
removing filter 324
differential auger-reel control 232
disc pressure
viewing 252–253, 258–259
disc pressure alarm
adjusting 248, 254
disc speed 71
setting for R85 Rotary Disc Header 247
viewing 252–253, 258–259
disc speed switch 73
DK
definition 29
DM
definition 29
DOC
definition 29
doors
location 36
double booster spring kit — external 387
double windrow attachment shutoff kit 387
double windrow attachments 74, 202
conveyor speed adjustment buttons 76
deck position 203
draper speed 203
raising deck 76
double windrowing 202
draper headers
operating a D1X or D1XL Series 207
draper pressure
viewing 228
draper speed 74
D1X and D1XL Series Draper Headers
setting in manual mode 217
setting in auto mode 215
viewing 228–229
draper speed controls 76
drive wheels, *See* wheels and tires
driving the windrower
adjusting ground speed limit 124
driving on road 132, 135
engine-forward operation 128
entering/exiting the windrower 124

forward in cab-forward mode..... 125
reverse in cab-forward mode 127
reverse in engine-forward mode..... 129
spin turn..... 130
stopping 130
DWA, *See* double windrow attachments

E

EC declaration of conformity iii
ECM
definition..... 29
eco engine control
programming the EEC 119
using the EEC 68
ECU
definition..... 29
electrical systems
auxiliary power posts..... 342
battery
battery cover
closing..... 334
opening 333
boosting..... 336
charging..... 335
connecting..... 340
disconnecting..... 340
installing 339
maintaining 333
removing..... 338
fuses and relays 370
checking and replacing fuses..... 368
inspecting/replacing 125A main fuses..... 375
replacing circuit breakers/relays..... 369
specifications 32
troubleshooting 395
engaging the header 199
engine air intake temperatures..... 123
engine control module
welding precautions 9
engine coolant temperatures..... 123
engine cooling system
cooling module
cleaning screens and components 299, 302
engine coolant
adding coolant 328
checking coolant level 288
checking coolant strength 347
draining coolant 327
engine harness
welding precautions 9
engine interlock 321
engine load
viewing 246, 252–253, 258–259
engine operation
engine aftertreatment switches
manual SCR conditioning/inhibit switches 122
engine speed..... 353
engine temperature..... 121
exhaust aftertreatment system
exhaust system cleaning..... 121
fuelling.....112, 289
oil pressure 121
shutting down the engine..... 120
engine rpm..... 77
engine-forward
definition..... 29
engines
adding coolant..... 328
adding oil.....283, 306
belts 351
checking coolant level..... 288
checking cooling data 123
checking interlock 321
checking oil level.....114, 282
eco engine control
programming the EEC..... 119
eco engine control (EEC)
using the EEC 68
electronics 15
engine air filter
changing secondary air filter..... 310
cleaning primary air filter 310
installing primary air filter 309
maintaining filters..... 306
removing primary air filter..... 306
engine compartment 268
engine controls..... 67
engine exhaust system
inspecting exhaust system 312
engine gearbox maintenance
adding lubricant 291
changing lubricant 276, 314
checking lubricant level..... 291
engine oil change 305
draining oil 305
engine oil filter 305
engine operation
eco engine control programming..... 119
starting the engine..... 115
troubleshooting 118
fault codes..... 460
faults and telltales..... 87
general engine inspection..... 332
manuals 332
power 15
removing water from fuel system..... 284
safety..... 14
specifications 32
speed..... 15

troubleshooting 391
engine start 118
entering the cab 124
evaporator 344
evaporator core
cleaning 346
exhaust aftertreatment
activating 122
exhaust system
inspecting 312
exhaust system cleaning 121
exiting the cab 124
external booster spring kit 386

F

fan speeds 123
fault codes
engine fault codes 460
windrower fault codes 414
FFFT
definition 29
field lights
location 36
switch 52
symbol 106
filters
charge filter 280
installing 281
removing 280
DEF supply module filter 323
checking filter 323
cleaning and inspecting filter 325
installing filter 326
removing filter 324
DEF vent hose filter
changing DEF vent hose filter 332
engine air filter
changing secondary air filter 310
cleaning primary filter element 310
installing primary air filter 309
removing primary air filter 306
engine oil filter
replacing engine oil filter 305
fresh air intake filter 293
fuel filters
maintaining fuel filters 316
primary fuel filter
installing 317
removing 316
removing/installing fuel tank vent filter 322
secondary fuel filter
installing 318
removing 317
HVAC filters
fresh air intake filter
inspecting and cleaning 294
installing filter 295
removing filter 293
return oil filter
installing 279
removing 278
final drives 141
finger tight
definition 29
fire extension module
welding precautions 9
float, *See* header float
float preset 74
float springs
location 36
spring with external booster spring kit 386
fluids, fuel, and lubricants 261
fuel gauges 77
fuel systems
fluids, fuel, and lubricants 261
fuel filters
maintaining fuel filters 316
primary fuel filter
installing 317
removing 316
secondary fuel filter
installing 318
removing 317
fuel specifications 261
fuel tank
draining the fuel tank 349
filling the fuel tank 112, 289
fuel/water separator 283
removing water from fuel system 284
removing/installing fuel tank vent filter 322
priming 318
function buttons 104
fuse panel 370
fuses
accessing fuses 367
checking and replacing 368–369
inspecting/replacing 125A main fuses 375

G

gearboxes
engine
changing lubricant 276, 314
glossary 29
GPS automated steering systems 385
ground speed control
troubleshooting 400
ground speed lever
function group switches 71

header position 6-way switch 72
header raise and lower rates 205
home, back, and select buttons 81
location 39
One-Touch-Return positions 73
reel and disc speed switch 73
reel position 4-way switch 72
scroll knob, scroll wheel, and select button 80
ground speed levers 69
ground speed limit 124
ground speeds 77
GSL, *See* ground speed lever
GVW
definition 29

H

handholds
location 36
hard joint
definition 29
harvest performance tracker
fault codes
engine fault codes 460
windrower fault codes 414
faults and telltales 87
function buttons
F1 to F4 104
HPT display 67, 77
home, back, select buttons 81
main menu 83
menu icons 84
navigating the display 80
QuickMenu 82
screen layout 77
scroll knob, scroll wheel, select button 80
setting alarm volume 91
setting display brightness 90
setting display language and units 92
setting display time and date 92
setting up the display 90
soft keys 81
machine information
accessing header information 100
accessing performance information 102
accessing software information 101
accessing windrower information 99
run screen 1
auger headers 245
draper headers 228
rotary disc headers 252, 258
run screen 2
auger headers 246
draper headers 229
rotary disc headers 253, 259
run screen 3 131
run screen 4 123
settings
calibrating windrower and header 94
control locks 98
resetting to factory defaults 93
windrower tire size 97
symbols
definitions 107
viewing machine information 99
harvest performance tracker display
checking header settings 192
location 39
hazard lights 54, 56, 69
location 36
HDS
definition 29
header angles 200
header controls 70
console header buttons 74
deck shift/float presets 75
draper speed 76
DWA 76
GSL buttons 71
header position 6-way switch 72
One-Touch-Return positions 73
reel and disc speed switch 73
reel position 4-way switch 72
header drive reverse button 70
header engage/drive switch 70
header drive 198
specifications 32
header engage switch 70
header float 194
checking float 195
float operating guidelines 196
float options with deck shift (D1X Series) 226
float options with deck shift (D1XL Series) 226
float options with fixed deck (R85) 250, 256
float options with fixed deck (rotary header) 250, 256
preset controls 75
removing and restoring float 198
setting float 196
header hours 100
header information 77
header lift legs
location 36
header operation
center-link
checking self-locking center-link hook 201
cutting height 202
disengaging the header 199
engaging the header 199
header angles

adjusting header angle 200
header drive 198
header float
float operating guidelines 196
operating a header 193
operating with a header
A40DX Auger Header 232
D1X Series 207
D1XL Series 207
header float 194
R113 Rotary Disc Header 254
R85 Rotary Disc Header 247
reversing the header 199
header positions 71, 77
headers
accessing information on the HPT 100
adjusting raise and lower rates 205
compatability 32
D1X Series
attaching header
self-aligning hydraulic center-link 155
attaching to windrower
connecting hydraulics 160
draper header supports 154
detaching from windrower
units with hydraulic center-link 162
D1X Series Draper Headers
attaching header
non-self-aligning hydraulic center-link 155
D1XL Series
attaching header
non-self-aligning hydraulic center-link 155
with self-aligning hydraulic center-link 155
attaching to windrower
connecting hydraulics 160
draper header supports 154
detaching from windrower
units with hydraulic center-link 162
definition 29
detaching from windrowers 187
R113 Rotary Disc Header
disc run screens 252, 258
R85 4.9 m (16 ft.) Rotary Disc
attaching to windrower
connecting header hydraulics 172
with self-alignment kit 167
without self-alignment kit 167
R85 Rotary Disc Header
disc run screens 252, 258
towing with windrower 138
headlights 53–54
aligning 354
heater shut-off valves 59
hex keys
definition 29
high beams
switch 52
symbol 106
hoods
closing 269
location 36
opening to lowest position 268
horns 66
horn button location 69
location 36
hp
definition 29
HPT, *See* harvest performance tracker
HVAC system
A/C compressor
coolant cycling 111
replacing belts 353
tensioning belts 275, 352
A/C cover
installing cover 347
removing cover 345
A/C evaporator 344
cleaning evaporator core 346
air distribution 59
fresh air intake filter 293
inspecting and cleaning 294
installing filter 295
removing filter 293
heater shut-off valve 59
return air cleaner/filter 298
testing/troubleshooting
cab air 401
hydraulic oil temperatures 123
hydraulics
connecting
M1240 to R113 SP 182
connecting hydraulics
A40DX 149
D1X Series Draper Header 160
D1XL Series Draper Header 160
R85 4.9 m (16 ft.) 172
filters
charge filter 280
installing charge filter 281
part numbers 263
removing charge filter 280
return oil filter
installing 279
removing 278
fittings
O-ring boss (ORB) adjustable 408
O-ring boss (ORB) non-adjustable 410
O-ring face seal (ORFS) 411
tapered pipe thread fittings 412
hydraulic hoses and lines 288

hydraulic oil
checking and adding hydraulic oil 284
draining hydraulic oil 329
filling hydraulic oil 331
hydraulic safety 6
troubleshooting 396

I

ignition switch 67
location 39
inhibit status 77
ISC
definition 29

J

JIC
definition 29

K

knife
definition 29
knife pressure
viewing 228, 245–246
knife speed 221, 239
A40DX Auger Headers
adjusting knife alarm pressure 240
adjusting knife speed alarm 241
knife speed chart 238
D1X Series Draper Headers
knife speed alarm 224
D1X Series headers
knife alarm pressure 222
D1XL Series Draper Headers
knife speed alarm 224
D1XL Series headers
knife alarm pressure 222
knife speed chart 220
viewing 228, 245–246

L

language
setting on HPT 92
leveling the header
D1X and D1XL Series Draper Headers 208
lighting 52
beacons 55
replacing lights 364
cab-forward mode
field 52
road lights 53
engine-forward mode
road lights 54
field lights
cab-forward mode 52
flood lights
adjusting front work lights (field) 356
headlights
aligning headlights (cab-forward) 355
aligning headlights (engine-forward) 354
replacing headlight bulb (engine-forward) 360
interior lights
dome bulb 364
dome light assembly 365
LED lights
optional lighting upgrade 385
replacing LED lights (deluxe cab) 362
rear roof work lights
adjusting rear roof work lights 357
rear swath lights
adjusting rear swath lights 358
red and amber lights
replacing bulbs 362
troubleshooting 395
turn signal indicators 367
turn signal/hazard lights 56
work lights
replacing halogen bulbs 359
locks
locking swath compressor 231
lubricants
adding to engine gearbox 291
changing in engine gearbox 276, 314
checking engine gearbox level 291
lubricating the windrower
recommended fuel, fluids, and lubricants 261
lubrication 296
grease points and intervals 297
greasing procedure 296
lubricants/fluids/system capacities 262
lubricating wheel drive
adding lubricant 312
changing wheel drive lubricant 277
checking lubricant levels 311
storing lubricants and fluids 261

M

maintenance
A/C compressor belt
replacing 353
tensioning 275, 351–352
break-in inspection schedule 264
break-in inspections
procedures 273

break-in period 110
checking safety systems 319
  engine interlock 321
  operator presence system 319
cycling air conditioning compressor coolant 111
daily checks and maintenance 112
electrical system
  batteries 333
electronic maintenance tool 267
engine
  engine oil
    checking 114, 282
  gearbox 291
  general engine inspection 332
engine air filters 306
engine coolant 327
engine exhaust system
  inspecting 312
engine oil 305
filter part numbers 263
fuel system
  fuel filters 316
greasing the windrower 296
hydraulic oil
  checking and adding hydraulic oil 284
  draining hydraulic oil 329
  filling hydraulic oil 331
lighting 354
  adjusting field/work/flood lights (front) 356
  adjusting rear swath lights 358
  adjusting roof work lights (rear) 357
  aligning headlights (cab-forward) 355
  aligning headlights (engine-forward) 354
  replacing beacon lights 364
  replacing cabin dome bulb 364
  replacing dome light assembly 365
  replacing halogen bulbs 359
  replacing headlight bulb (engine forward) 360
  replacing LED lights (deluxe cab) 362
  replacing red and amber bulbs 362
  replacing red tail lights 363
maintenance schedule 264
maintenance schedule/record 265
preseason checks/annual service 110
service intervals
  10 hours or daily 282
  100 hours 298
  1000 hours 322
  2000 hours 327
  250 hours or annually 305
  50 hours 293
  500 hours or annually 316
  annual service 333
  as required 349
steering link pivots 342
  wheels and tires
    drive wheels 376
maintenance and servicing
  engine
    engine belt 351
  fuel, fluids, and lubricants 261
  platform operation, *See* platforms
  safety 5
  wheels and tires
    caster wheels 379
maintenance indicator 77
maintenance platforms
  location 36
manuals
  engine owner's manual 332
  manual storage location 61
MDS
  definition 29
menu icons
  HPT 84
metric bolts
  torque specifications 405
mirrors
  location 36

N

N-DETENT
  definition 29
n/a
  definition 29
NPT
  definition 29
nut
  definition 29

O

oil pressure 121
oils (engine)
  adding 283, 306
  checking level 114, 282
  draining oil 305
  replacing engine oil filter 305
One-Touch-Return 204
One-Touch-Return switches 71
operating symbols 106
operating the windrower
  accessing header information 100
  accessing performance information 102
  accessing software information 101
  accessing windrower information 99
  adjusting header raise and lower rates 205
  break-in period 110

daily checks 112
data
run screen 3 – performance data 131
run screen 4 – cooling data 123
double windrowing 202
deck position 203
draper speed 203
driving the windrower
forward in cab-forward mode 125
forward in engine-forward mode 128
reverse in cab-forward mode 127
reverse in engine-forward mode 129
spin turn 130
stopping 130
engine starting 115
filling the fuel tank 112, 289
One-Touch-Return 204
operating a header 193
operating with a header
A40DX Auger Header 232
D1X Series 207
D1XL Series 207
header safety props 193
R113 Rotary Disc Header 254
R85 Rotary Disc Header 247
operational safety 109
overview 99
preseason checks/annual service 110
distributing A/C compressor coolant 111
shutting down the engine 120
operations 109
See also engine operation
See also header operation
header float 194
owner/operator responsibilities 105
symbols 106
operator presence system 41
checking 319
engine and transmission 41
header drive 41
operator's seat adjustments 42
armrest 42
armrest angle 42
cushion extension fore-aft (deluxe cab) 46
cushion tilt (deluxe cab) 46
fore-aft isolator control 44
fore-aft position 43
heating/cooling switch (deluxe cooling) 47
lateral isolation (deluxe cab) 47
lumbar support 45
seat tilt 44
suspension and seat height 43
vertical dampener 45
operator's station 39
AM/FM/CD/USB Bluetooth®-equipped radio 63
checking engine interlock 321
climate control system
fan and temperature controls 60
console 39
engine controls 67
eco engine control (EEC) 68
header controls, *See* header controls
horn 66
lighting 52
cab-forward - field 52
cab-forward - road 53
engine-forward - road 54
tail / beacon lights 55
turn signal/hazard lights 56
location 36
operator amenities
coat hook 61
manual storage 61
operator's console 61
window shades 61
operator presence system 41, 319
engine and transmission 41
header drive 41
rear view mirrors 58
safety systems 319
seat belts 49, 349
steering column and wheel 51
training seat 48
windrower controls 69
windshield wipers 57
options and attachments 385
360° night vision LED lighting 385
automated steering systems 385
ballast packages for draper headers 389
booster spring kit (external) 386
center-link lifter 388
conversion kit for disc ready to disc, auger, and draper ready 386
double booster spring kit – external 387
double windrow attachment (DWA) 387
DWA shutoff kit 387
single sided mud caster wheel 390
swath compressor 388
transport
towing harness 390
weight box 390
windrower lighting upgrade (LED) 385
ORB
definition 29
ORFS
definition 29
owner/operator responsibilities 105

P

park 69
performance data 131
platforms 270
  adjusting platform 271
  closing platform 270
  opening platform 270
precleaners
  location 36
predelivery checks
  tire pressure 285
preseason checks 110
priming
  fuel system 318
product overview 29

Q

QuickMenu system 82

R

R Series headers
  definition 29
R113 Rotary Disc Headers
  attaching header 177
  connecting hydraulics
    M1240 182
  detaching header 187
  disc run screens 252, 258
    run screen 1 ..... 252, 258
    run screen 2 ..... 253, 259
  disc speed 254
    adjusting disc pressure alarm 248, 254
    setting disc speed 254
  disc speed switch 73
  header float
    float options with fixed deck 250, 256
  operating 254
R85 Rotary Disc Headers
  attaching to windrower
    connecting header hydraulics 172
    hydraulic center-link 167
  detaching from windrower 174
  disc run screens 252, 258
    run screen 1 ..... 252, 258
    run screen 2 ..... 253, 259
  disc speed 254
    disc pressure alarm 248, 254
    setting disc speed 247, 254
  disc speed switch 73
  header float
    float options with fixed deck 250, 256
  operating on an M1240 windrower 247
radios
  activating Bluetooth® 64
  AM/FM/CD/USB Bluetooth®-equipped radio 63
  pairing a Bluetooth® device 65
rear view mirrors 58
reel
  D1X and D1XL Series headers
    adjusting reel alarm pressure 213
  troubleshooting 396
reel alarm pressure
  A40DX Auger Headers 237
  D1X and D1XL Series headers 213
reel fore-aft position
  viewing 229
reel height
  viewing 229
reel position 71
reel position four-way switch 72
reel pressure
  viewing 228, 245
reel speed 71
  A40DX Auger Headers
    adjusting 232
    setting in auto mode 232
    setting in manual mode 234
  D1X and D1XL Series Draper Headers
    adjusting 210
    setting in auto mode 210
    setting in manual mode 212
  viewing 228–229, 245–246
Reel Speed Control kit 232
reel speed switch 73
relay module 370
relays
  replacing 369
return oil filter
  installing 279
  removing 278
reverse 70
  symbol 106
reversing
  in cab-forward mode 127
  in engine-forward mode 129
reversing the header 199
road lights 53
  aligning headlights 354
  location 36
  switch 52
  symbol 106
RoHS
  definition 29
roof connectors
  welding precautions 9
rpm
  definition 29

S

SAE
  definition 29
safety 1
  battery safety 8
  engine safety 14
    engine electronics 15
    high-pressure rail 14
  general safety 3
  hydraulic safety 6
  maintenance safety 5
  operational safety 109
  safety alert symbols 1
  safety sign decals 16
    installing decals 16
    interpreting decals 19
  sign location 17
  signal words 2
  tire safety 7
  welding precautions 9
safety systems 319
  checking engine interlock 321
  checking operator presence system 319
screen brightness 90
screen layouts
  HPT 77
screws
  definition 29
scroll knob 80
scroll wheel 71, 80
SDD
  definition 29
seat belts 49
  maintaining seat belts 349
select button 80
select switch 71
self-propelled windrowers
  definition 29
serial numbers
  engine serial number location v
  windrower serial number location v
shift switch 71
shutting down the engine 120
SKD
  definition 29
Slow Speed Transport option 138
soft joint
  definition 29
soft keys 81
software 101
specifications
  battery specification 333
  filter part numbers 263
  fuel 261
  torque specifications 405
  windrower dimensions 35
  windrower specifications 32
spin turning 130
spm
  definition 29
starting the engine 115
steering
  adjustments
    steering column 51
    steering wheel 51
  automated steering systems (option) 385
  checking steering link pivots 342
  troubleshooting 400
stopping 130
storing windrowers 141
supply module
  cleaning and inspecting filter 325
  installing filter 326
  removing filter 324
supply module filter 323
swath compressors 74
  description 229
  locking 231
  operating 229
  raising 76
switches
  auxiliary lift 76
  disc speed 73
  ground speed lever 71
  header engage 70
  header position 72
  lighting 52
  reel position 72
  reel speed 73
symbols
  definitions 106
  HPT 107
  HPT menu icons 84
  windrower operating symbols 106

T

taillights 53–55
  location 36
telltales 77
temperature
  cab 59–60
  engine 121
  engine air intake 123
  engine coolant 123
  hydraulic oil 123, 253, 259
  seat 47
tension
  definition 29

TFFT
definition 29
throttle 67, 70
location 39
time
setting on HPT 92
tires, *See* wheels and tires
torque
definition 29
torque angles
definition 29
torque specifications 405
metric bolt specifications 405
bolting into cast aluminum 407
O-ring boss (ORB) hydraulic fittings – adjustable 408
O-ring boss (ORB) hydraulic fittings – non-adjustable 410
O-ring face seal (ORFS) fittings 411
tapered pipe thread fittings 412
torque-tension
definition 29
towing harness 390
towing headers 138
preparing 139
weight box 390
towing windrower 140
engaging and disengaging final drives 141
traction drive
specifications 32
troubleshooting 398
training seats 48
Trimble® automated steering systems 385
troubleshooting
batteries 395
cab air 401
electrical 395
engine 391
engine start 118
header drive 397
hydraulics 396
lighting 395
operator's station 404
reel 396
steering and ground speed control 400
traction drive 398
turn signals 395
wheels 398
turn signal indicators 367
turn signals 53–54, 56, 69, 71, 73
location 36
status 77
symbol 106
troubleshooting 395
turning the windrower 130

U

UCA
definition 29
ULSD
definition 29
units of measurement
setting on HPT 92

W

walking beams
adjusting caster tread width 379
location 36
maximum width 32
tightening bolts 275
washers
definition 29
water
removing from fuel system 284
WCM
definition 29
weight boxes 132, 135, 138, 390
welding precautions 9
wheel motor connectors
welding precautions 9
wheels and tires
caster wheels 379
adjusting caster tread width 379
caster wheel nut torque 274
installing forked caster wheel 381
location 36
lowering caster wheel (all) 383
raising caster wheel (all) 383
removing forked caster wheel 382
tightening anti-shimmy dampener 275
checking tire pressure 285
drive wheels
installing drive wheels 378
location 36
lowering drive wheels 379
raising drive wheel 376
removing drive wheel 377
tightening drive wheel nuts 273
safety 7
setting tire size in HPT 97
tires
checking pressure 285
tire options 32
troubleshooting 398
wheel drive
adding lubricant 312
changing lubricant 277
checking lubricant levels 311
windrower faults

fault codes 414
faults and telltales 87
windrowers
definition 29
windshield wipers 57
location 36
symbol 106
work lights 53–54

Lubricants, Fluids, and System Capacities

Table .11 System Capacities

Lubricant/Fluid	Location	Description	Capacity
Diesel exhaust fluid (DEF)	Diesel exhaust fluid tank	Must meet ISO 22241 requirements.	28 liters (7.5 US gallons)
Grease	As required unless otherwise specified	SAE multi-purpose high temperature extreme pressure (EP2) performance with 1% max molybdenum disulphide (NLGI Grade 2) lithium base	As required unless otherwise specified
Diesel fuel	Fuel tank	Ultra low sulphur diesel (ULSD) Grade No. 2, or ULSD Grade No. 1 and 2 mix[25]; refer to *5.1.2 Fuel Specifications, page 261* for more information	518 liters (137 US gallons)
Hydraulic oil	Hydraulic reservoir	Single grade trans-hydraulic oil. Recommended brands: • Petro-Canada Duratran • John Deere Hy-Gard J20C • Case HY-TRAN ULTRACTION • AGCO Power Fluid 821XL	60 liters (15.8 US gallons)[26]
Gear lubricant	Gearbox	SAE 75W-140 or 80W-140, API service class GL-5 fully synthetic gear lubricant, (SAE J2360 preferred)	2.3 liters (2.4 US quarts)
Gear lubricant	Wheel drive	SAE 75W-140 or 80W-140, API service class GL-5 fully synthetic gear lubricant, (SAE J2360 preferred)	1.4 liters (1.5 US quarts)
Antifreeze	Engine cooling system	ASTM D-6210 and Fleetguard ES Compleat®	33 liters (8.7 US gallons)[27]
Engine oil	Engine oil pan	SAE 15W-40 compliant with SAE specs for API Class SJ and CJ-4 engine oil	14 liters (14.8 US quarts)
Air conditioning refrigerant	Air conditioning system	R134A	2.38 kg (5.25 lb.)
Air conditioning refrigerant oil	Air conditioning system total capacity	PAG SP-15	240 cc (8.1 fl. oz.)
Windshield washer fluid	Windshield washer fluid tank	SAE J942 compliant	4 liters (1 US gallon)

25. Optional when operating temperature is below 0°C (32°F).
26. Denotes capacity of a dry system. Refill capacity is 58 liters (15 US gallons).
27. Equal parts with water; high quality, soft, deionized or distilled water as recommended by Supplier.

MacDon

MacDon Industries Ltd.
680 Moray Street
Winnipeg, Manitoba
Canada R3J 3S3
t. (204) 885-5590 f. (204) 832-7749

MacDon, Inc.
10708 N. Pomona Avenue
Kansas City, Missouri
United States 64153-1924
t. (816) 891-7313 f. (816) 891-7323

MacDon Australia Pty. Ltd.
A.C.N. 079 393 721
P.O. Box 103 Somerton, Victoria, Australia
Australia 3061
t.+61 3 8301 1911 f.+61 3 8301 1912

MacDon Brasil Agribusiness Ltda.
Rua Grã Nicco, 113, sala 404, B. 04
Mossunguê, Curitiba, Paraná
CEP 81200-200 Brasil
t. +55 (41) 2101-1713 f. +55 (41) 2101-1699

LLC MacDon Russia Ltd.
123317 Moscow, Russia
10 Presnenskaya nab, Block C
Floor 5, Office No. 534, Regus Business Centre
t. +7 495 775 6971 f. +7 495 967 7600

MacDon Europe GmbH
Hagenauer Strasse 59
65203 Wiesbaden
Germany

CUSTOMERS
MacDon.com

DEALERS
Portal.MacDon.com

Trademarks of products are the marks of their respective manufacturers and/or distributors.

Printed in Canada