FFT FLEX-FLOAT TECHNOLOGY®

MacDon®

FD1 Series FlexDraper® Header for Combines with FM100 Float Module

Parts Catalog

215821 Revision A

Original Instruction

Featuring MacDon FLEX-FLOAT Technology®

The Harvesting Specialists.

FD1 Series FlexDraper® Header for Combines and FM100 Float Module

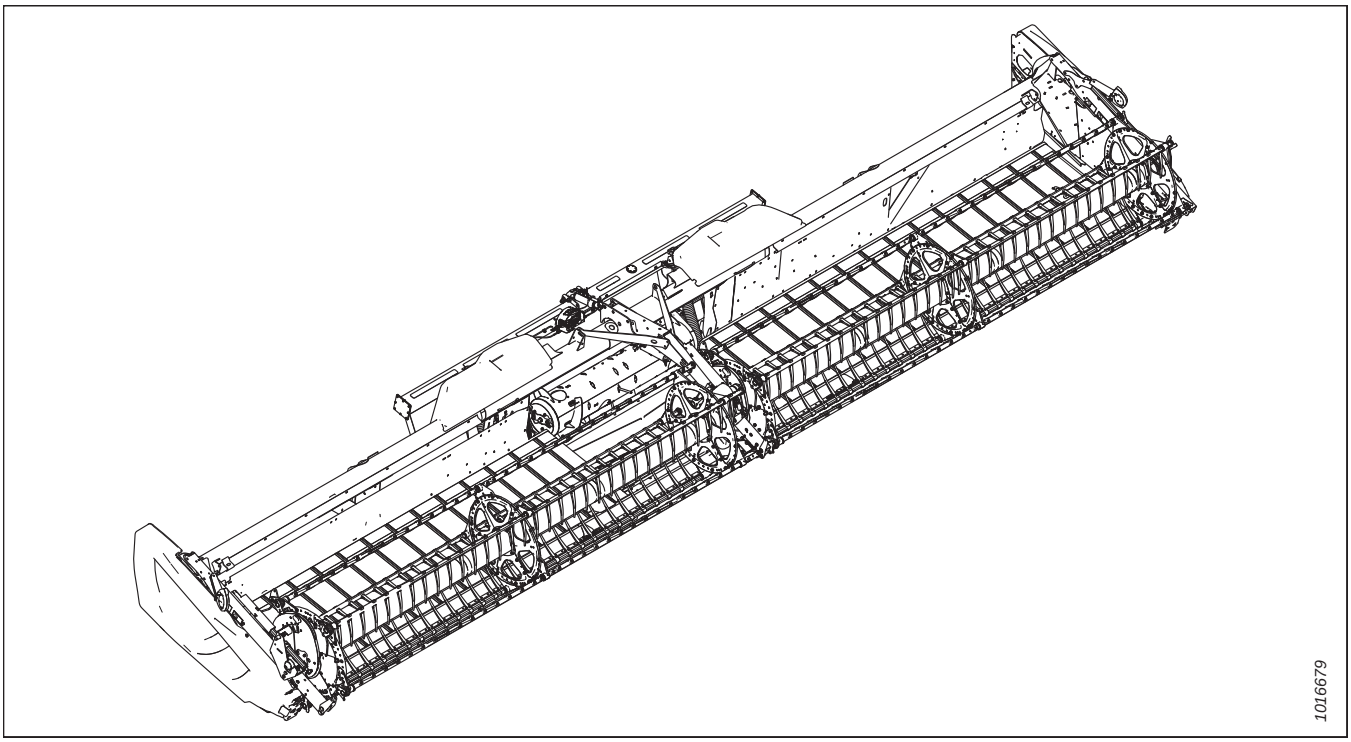

Published: February 2022

NOTE:

Keep your MacDon publications up-to-date. The most current version can be downloaded from our website (*www.macdon.com*) or from our Dealer-only site (*https://portal.macdon.com*) (login required).

This document is available in Czech, English, French, Polish, Portuguese, Russian, Spanish, and Ukrainian versions. The most current version can be downloaded from our MacDon International website (*www.macdon.com/world*) or from our Dealer-only site (*https://portal.macdon.com*) (login required).

© 2022 MacDon Industries, Ltd.

The information in this publication is based on the information available and in effect at the time of printing. MacDon Industries, Ltd. makes no representation or warranty of any kind, whether expressed or implied, with respect to the information in this publication. MacDon Industries, Ltd. reserves the right to make changes at any time without notice.

Introduction

This Parts Catalog lists all the replacement parts that can be ordered for a MacDon FD1 Series FlexDraper® Combine Header (Sections *1 Header Frame, Dividers, and Shields, page 1*–*83 (Option) Vertical Knife Assembly – Service Parts, page 245*) and a FM100 Float Module (Sections *84 Float Module Frame and Components, page 247*–*161 (Option) Stripper Bars, page 447*).

When ordering, be sure the complete and proper part number is given. Some parts vary with header size; be sure you are ordering the correct part number for your unit.

Bold text is used to indicate updates made at the current revision level. With each new revision of the catalog, previous revisions are returned to regular text.

Electrical connectors used on MacDon products are available for sale but not listed in this catalog. For the list of available connectors, refer to the Electrical Connectors Parts Catalog (MD #169641).

In this catalog, right and left are determined from the operator's seated position in the combine. An arrow is sometimes used in illustrations to indicate forward position.

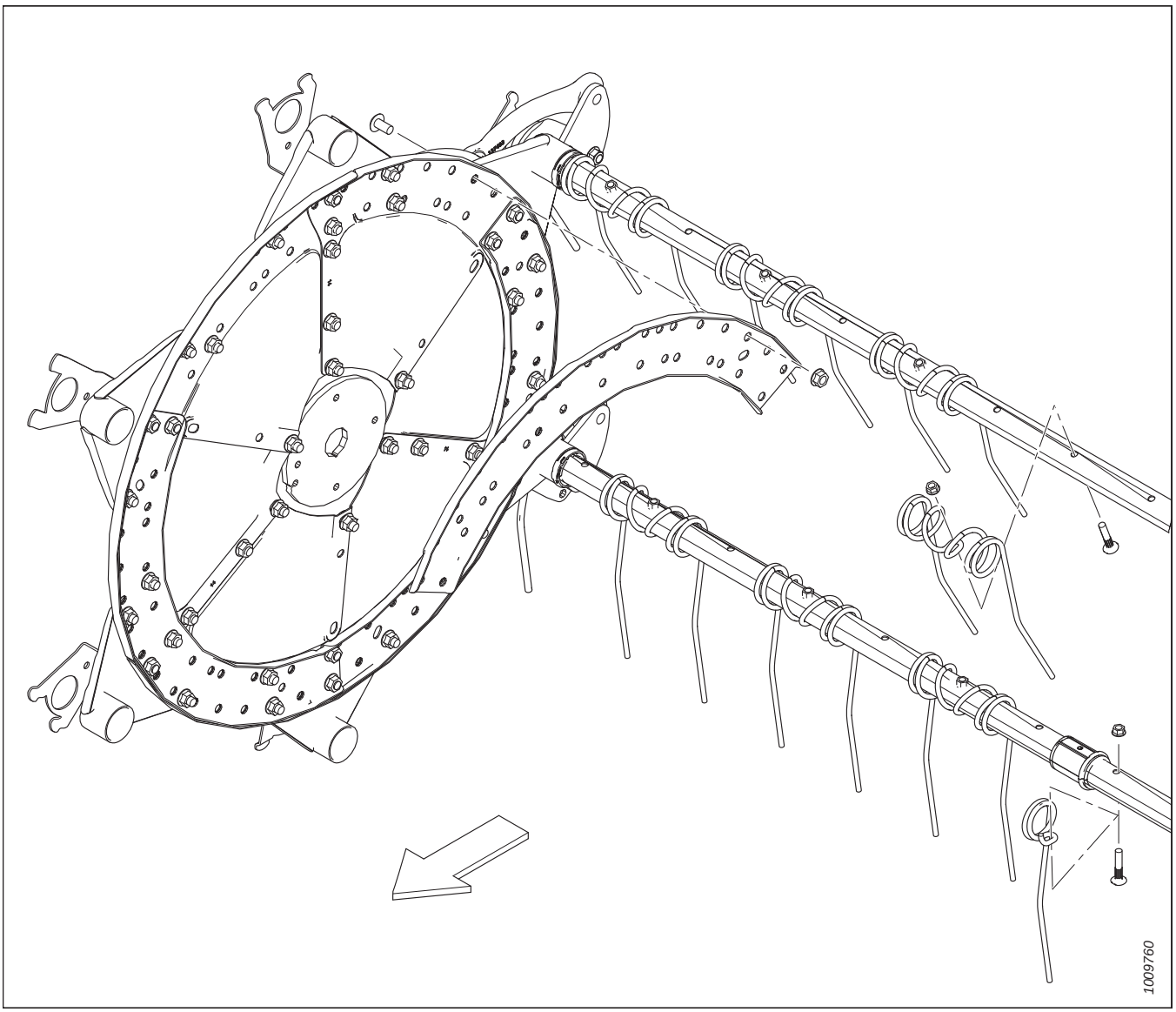

Abbreviations

A/R – as required (quantity varies)	ASSY – assembly	BHRN – button head rib neck
BV – ball valve	CCW – counterclockwise	CON – conical (spring washer)
CSK – countersink	C/W – complete with	CW – clockwise
DBLE – double	DK – double knife	DR – double reel
DT – distorted thread	FLG – flange	GA – gauge
GR – grade	GS – grass seed	HD – head
HDR – header	HFA – hydraulic fore-aft	HH – hex head
HNBR – hydrogenated nitrile butadiene rubber	HYD – hydraulic	I.D. – inside diameter
IP – internal plus (torx plus)	KP – knife pressure	KR – knife return
LG – long	LH – left hand (determined from Operator's position, facing forward)	LK – lock
MACH – machine	MD – MacDon	MFA – manual fore-aft
MY – model year	NC – national coarse thread	NF – national fine thread
NSS – not sold separately	NT – narrow transport	O.D. – outside diameter
OPT – optional	PO – pilot operated	PT – pull-type (mower conditioner)
RC – roller chain	REF – reference, part number called up elsewhere in catalog	REG – regular
RH – right hand (determined from Operator's position, facing forward)	RHSN – round head, square neck or square neck carriage bolt	RHSSN – round head, short, square neck
RTD – rotating tine drum	SAE – Society of Automotive Engineers (part produced to comply with)	SD – side draper
SER – serrated	SK – single knife	SKT HD – socket head
SMTH – smooth	SMV – slow moving vehicle	SOCK – socket
SP – self-propelled (windrower) header	SPCL – special	SPH – spherical
SPI – serrations per inch (knife Sections)	SR – single reel	STL – steel (stainless)
STR – standard	STVR – Stover	TFL – thread full length
THD – thread	TR – triple reel	UCA – upper cross auger
UDK – untimed double knife	UNC – unified coarse thread	UNEF – unified extra fine thread
UNF – unified fine thread	UNS – unified special thread series	VK – veritcal knife
WF – wide frame	ZP – zinc plated	

Serial Number Breaks

The side of the serial number on which the dash (–) appears determines whether the part is used "up to" or "after" the serial number given.

Example:

- –162249 Used on machines up to and including serial number 166249
- 166250– Used on machines including and after serial number 166250

Summary of Changes – FD1 Series and FM100 (215821 Rev. A)

This list covers changes made since the last revision (215336 Rev. B).

Section	Summary of Change	Internal Use Only
1 Header Frame, Dividers, and Shields, page 1	Added support bracket kit 335752.	ECN 62054
	Added cutterbar connection supports 125418 and 253552 and bolts 103562 for split-frame headers. Removed bolts 117015, which get removed from the frame prior to shipping. Updated illustration from 1020027 to 1037794.	Product Support
3 Flex Frame Hinges and Top-Link, page 7	Stop link 123753 superseded by 335638.	ECN 61674
10 Segmented Knives – Single-Knife Headers, Fine-Tooth Sections, page 25	Added fine-tooth knife assembly kits 335489, 335490, 335491, and 335492.	ECN 60977
12 Segmented Knives – Single-Knife Headers, Ultra Coarse-Tooth Sections, page 31	Added section with new illustration 1037324.	ECN 60984
13 Segmented Knives – Double-Knife Headers, Fine-Tooth Sections, page 33	Added fine-tooth knife assembly kits 335484, 335485, 335486, and 335487.	ECN 60977
15 Segmented Knives – Double-Knife Headers, Ultra Coarse-Tooth Sections, page 41	Added section with new illustration 1037298.	ECN 60984
21 Draper Carrier Deck and Tensioner, page 55	Added draper options 172194, 172197, 172198, 220637, and 220638.	Product Support, Parts
	Removed draper connector screws 165434 and nuts 135626. Draper connector hardware kit 172710 is carried for this application and includes 25 screws and nuts. Updated illustration from 1033265 to 1037844.	Parts
23 Draper Drive – Manual Deck Shift, page 63	Corrected hose cover hardware from 3/4-in. bolt 21821 to 1-in. bolt 21975.	G255184
	Added clamps 50022 for FD125 headers. Updated illustration from 1020270 to 1037857.	ECN 60684
24 Pick-Up Reel – Single-Reel Headers (FD125), page 65	Replaced plastic finger 311482 (service code 5) with plastic finger 10-pack 311524.	Parts
	Added FD125 6 to 9 bat conversion kit B6981. Added 9 bat quantities.	ECN 60503
	Removed tail end finger 245083 from illustration. Updated illustration from 1033505 to 1037816.	G326211 G326212
25 Pick-Up Reel – Double-Reel Headers (FD130, FD135, FD140, and FD145), page 69	Revised note to include 4-inch finger spacing tine tube dimensions.	Product Support
32 Reel Support Arms and Lift Cylinders – Outer Arms, page 97	Added footnote that on FD125 headers, washers 18600 are used on the RH reel arm only.	Engineering

Section	Summary of Change	Internal Use Only
33 Reel Drive Hydraulics – Lift and Fore-Aft – Single Reel (FD125), page 101	Added clamps 50022 and reference to hose holder 304031. Updated illustration from 1033475 to 1037861.	ECN 60684
36 Skid Shoes – End and Center, page 111	Steel skid shoes kit B6583 superseded by B9053. Center steel skid shoe 313871 superseded by 335608. Updated illustration from 1029459 to 1037889.	ECN 61403
38 Decals – Product Identification, page 117	Lime endshield decals 304120, 304121, 255116, and 255317 discontinued.	ECN 62604
44 (Option) Crop Lifters, page 129	Added footnotes to clarify coupling nut 255927 is for tracked combines, and coupling nut 255928 is for wheeled combines.	Parts
60 (Option) Stub Guards with Sheet Metal Hold-Downs, page 167	Added FD125 stub guard kit B6982.	ECN 60503
	Corrected callouts for 40–45 ft. header center guard and hold-down. Added note to clarify that a standard guard 118346 is used as the center hold-down over the offset center guard 124775. Updated illustration 1029521 to 1037843.	Engineering
62 (Option) Sunflower Attachment – Base Kit, page 171	Added section to catalog with new illustration 1037081.	ECN 61215
63 (Option) Sunflower Attachment – Pans, page 175	Added section to catalog with new illustration 1037082.	ECN 61215
64 (Option) Sunflower Attachment – Deflectors, page 177	Added section to catalog with new illustration 1037083.	ECN 61215
66 (Option) Upper Cross Auger – Left End (FD125, FD130, FD135, and FD140) – 2021 and Prior, page 181	Added UCA repair kit 294682. Updated illustration from 1029494 to 1038036.	Product Support
	Removed superseded UCA bundles B6462, B6463, B6464, B6585, B6586, B6587, B6872, and B6873. Added “2021 and Prior” to the title.	ECN 61273
	Removed bracket 294006, which is not serviced.	Parts
67 (Option) Upper Cross Auger – Right End (FD125, FD130, FD135, and FD140) – 2021 and Prior, page 185	Added UCA repair kit 294682. Updated illustration from 1033534 to 1038037.	Product Support
	Added “2021 and Prior” to the title.	ECN 61273
	Added UCA Center Support Repair kit 335589.	ECN 61410
68 (Option) Upper Cross Auger – Left End (FD145) – 2021 and Prior, page 189	Corrected motor hub part number from 253722 to 279775 for 45-ft upper cross augers.	B6465 B6588
	Added UCA repair kit 294682. Updated illustration from 1023947 to 1038038.	Product Support
	Removed superseded UCA bundles B6465 and B6588. Added “2021 and Prior” to the title.	ECN 61273

Section	Summary of Change	Internal Use Only
	Removed bracket 294006, which is not serviced.	Parts
69 (Option) Upper Cross Auger – Right End (FD145) – 2021 and Prior, page 193	Added UCA repair kit 294682. Updated illustration from 1023976 to 1038039.	Product Support
	Added washer 184589.	ECN 61122
	Added "2021 and Prior" to the title.	ECN 61273
	Added UCA Center Support Repair kit 335589.	ECN 61410
70 (Option) Upper Cross Auger – Center Support Repair Kit, page 197	Added section to catalog with new illustration 1038176.	ECN 61410
71 (Option) Upper Cross Auger – Left End (FD125, FD130, FD135, and FD140) – 2022, page 199	Added new section to catalog for UCA bundles B9009, B9010, B9011, B9012, B9044, B9045, B9046, and B9047, with new illustration 1038123.	ECN 61273
72 (Option) Upper Cross Auger – Right End (FD125, FD130, FD135, and FD140) – 2022, page 203	Added new section to catalog for UCA bundles B9009, B9010, B9011, B9012, B9044, B9045, B9046, and B9047, with new illustration 1038136.	ECN 61273
73 (Option) Upper Cross Auger – Left End (FD145) – 2022, page 205	Added new section to catalog for UCA bundles B9049 and B9050, with new illustration 1038203.	ECN 61273
74 (Option) Upper Cross Auger – Right End (FD145) – 2022, page 209	Added new section to catalog for UCA bundles B9049 and B9050, with new illustration 1038153.	ECN 61273
76 (Option) Vertical Knife – Standard Reel Arm, Left End (2019–2021), page 217	Removed reference to B6608, which has been superseded by B9048. LH support assembly 294721 is superseded by service kit 335869, which upgrades both LH and RH supports to the new design.	ECN 62429
77 (Option) Vertical Knife – Standard Reel Arm, Right End (2019–2021), page 221	Corrected right lifter weldment part number from 253706 to 253709.	Parts
	Removed reference to B6609, which has been superseded by B9051. RH support assembly 294722 is superseded by service kit 335869, which upgrades both LH and RH supports to the new design.	ECN 62429
78 (Option) Vertical Knife – Standard Reel Arm, Left End (2022), page 225	Added section to catalog for new vertical knife bundle B9048, with new illustration 1038357.	ECN 62429
79 (Option) Vertical Knife – Standard Reel Arm, Right End (2022), page 229	Added section to catalog for new vertical knife bundle B9051, with new illustration 1038358.	ECN 62429
84 Float Module Frame and Components, page 247	Oil filler gaskets 304658 superseded by oil filler gasket kit 312706.	ECN 60680

Section	Summary of Change	Internal Use Only
	Added hex head screw 320397 (metric) to list for model year 2022 and later units. Screw 135873 will remain in the parts catalog for model year 2021 and prior units to ensure that customers with older units will not cross thread a metric bolt into a imperial threaded hole.	ECN 62121
85 Feed Deck – Frame, Front Links, and Pivot Pins, page 249	Revised footnote to clarify that pins 231368 are not included with feed deck assembly 335286.	Parts
86 Feed Deck – Draper Drive and Rollers, page 251	Added shim kit 304748 to list. Added footnote to drive roller (287933) and hydraulic motor (245122) to explain required shim kit 304748.	Product Support
	LH and RH idler supports 287677 and 287678 superseded by 335173 and 335171.	ECN 60994
	Replaced cover 213279 with 2x cover 347339. Superseded bearing housing 335178 with 347487 and drive roller 287933 with roller service kit 335637.	ECN 61544
	Added Kit 347565 to list and illustration. Updated illustration from 1020592 to 1037076.	ECN 62257
	Removed bolt 136454, nut 135927, and reference to the adjuster bracket. This bracket was used in 2016 only, and all decks that used this part have been reworked since then. Updated illustration from 1037076 to 1037832.	Product Support, Engineering
87 Feed Deck – Pans and Fillers, page 255	Front spring pan supports 295218 and 295219 superseded by 347691 and 347692.	ECN 62187
88 Float Module – Attaching Parts, page 257	Hook 229293 superseded by breakaway hook 258876. Updated illustration from 1020496 to 1037856.	ECN 60624
	Added float stop 304799 for FD125 headers. Updated illustration from 1037856 to 1037885.	ECN 61072 ECN 61708
93 Auger Internal Components, page 267	Removed pre-2021 auger finger 287802, guide 187081, and finger holder kit 213026 from the parts list because they are out of stock.	Parts
94 Auger Assembly – Service Parts, page 269	Removed “2017 AND PRIOR” and serial number breaks from parts 301912, 276180, 276183, and 308056. Currently they all list as “2017 AND PRIOR” but this is causing confusion with dealers looking for service parts on newer headers. The kit which contains these parts is correct as “2017 AND PRIOR” but the individual parts in the kit are service for all model years.	Product Support
	Stock available for ball cage plate 213557. Superseding plate 337124 on ECN 59472 is not introduced in this catalog revision.	Engineering
	Added reverser shield retrofit kit 335354 to list for model year 2021 and later. Added serial number breaks to 328500 and 335354 to clarify.	ECN 60225
96 Drives, page 279	Removed hardware securing the pump assembly to the output shaft. This hardware is now listed in separate pump assembly topics for Bosch, Parker, and Eaton. Added references to Parker and Eaton pump assemblies. Updated illustration from 1023841 to 1038212.	ECN 62594 ECN 62656
97 Pump Assemblies – Identifying Pump, page 283	Added section to catalog with new illustration 1038329.	Engineering
98 Pump Assembly – Bosch/ Rexroth, page 285	Pump control valve 311727 superseded by pump control valve with cap 335447. Added cap 335446 to list as serviceable part.	ECN 60923

Section	Summary of Change	Internal Use Only
	Added cap 326217 and key 328218 as serviceable parts of knife drive piston pump 248089.	ECN 62208
	Added "Bosch/Rexroth" to title. Added note that references Parker and Eaton pump assemblies. Added hardware used to secure the pump to the output shaft. Updated illustration from 1027535 to 1038211.	ECN 62594
99 Pump Assembly – Parker Hannifin (2022 Only), page 289	Added section to catalog with new illustration 1038040.	ECN 62594 ECN 62656
100 Pump Assembly – Eaton (2022 Only), page 293	Added section to catalog with new illustration 1038046.	ECN 62594 ECN 62656
101 Knife Drive Pump Service Kit, page 297	Added section to catalog with new illustration 1038353.	Engineering
102 Draper Drive Pump Service Kit, page 299	Added section to catalog with new illustration 1038342.	Engineering
103 Input Driveline and Support, page 301	Revised various footnotes to clarify the compatible combines.	Engineering
107 Hydraulics – Drives and Header Connection, page 313	Filter element 202986 changed to service code 5, and is now serviced with filter 320360, which comes with two seals.	ECN 61432
	Hoses 213173, 213862, and 213861 superseded by 326240, 326242, and 326243. Added 8 inch strap 295927. Updated illustration from 1020641 to 1038201.	ECN 62656
	Added bracket 326231 and clamp 136110 for Parker configurations. Added fitting 135777, which replaces elbow fitting 136337 on Bosch configurations. Updated illustration from 1038201 to 1038387.	ECN 62734
111 Float Linkage and Components, page 323	Added kit 335743 to replace plate 301633 and pivot pin 335144.	ECN 62043
114 Decals – FM100, page 333	Added 10 hour lube decal 23163 to list.	ECN 61151
	FM100 grease decal 295047 superseded by 312908. Updated illustration from 1027639 to 1037261 to show changes.	ECN 61169
115 AGCO Challenger/Massey Ferguson – Float Module Completion, page 335	Completion package B6676 superseded by B6965.	ECN 60225
116 AGCO Gleaner – Float Module Completion, page 337	Added RH and LH bracket fillers 337943 and 337941 and hardware to list and illustration. Updated illustration from 1017264 to 1037556 to show changes.	ECN 61188
	Completion package B6675 superseded by B6964.	ECN 60225
119 AGCO Challenger/Massey Ferguson and Gleaner – Hydraulic Completion, page 343	Stock available for feed auger top cover 276285. Superseding top cover 304785 on ECN 58611 is not introduced into this catalog revision.	Engineering
120 AGCO IDEAL™ – Hydraulic Completion, page 347	Multicoupler latch 302029 superseded by 337980.	ECN 61219
	Multicoupler 294387 superseded by 335008.	ECN 60273
	Completion package B6668 superseded by B6966.	ECN 60225
122 Case IH and New Holland CR/CX – Float Module Completion, page 353	Completion package B6182 superseded by B6959.	ECN 60225

Section	Summary of Change	Internal Use Only
124 Case IH and New Holland CR/CX – Hydraulic Completion, page 357	Stock available for feed auger top cover 276285. Superseding top cover 304785 on ECN 58611 is not introduced into this catalog revision.	Engineering
125 Case IH 2300/2500 Series – Hydraulic Completion, page 361	Stock available for feed auger top cover 276285. Superseding top cover 304785 on ECN 58611 is not introduced into this catalog revision.	Engineering
130 CLAAS Lexion 500/700 Series – Float Module Completion, page 373	Completion package B6186 superseded by B6960.	ECN 60225
	Updated CLAAS completion package to include FM200 transition frame, which was designed to be reverse compatible with FM100: Transition frame 304788 replaced by 347077, lever 156784 replaced by 328582, pivot 304669 replaced by 347569, latch 304980 replaced b 337311, pins 19809 and 13125 replaced by lynch pin 113561, bushing 156780 replaced by 337043. Added covers 328356 and 301629. Updated hardware. Updated illustration from 1026492 to 1038090.	ECN 62359
131 CLAAS Lexion 500/700 Series – Hydraulic Completion, page 375	Stock available for feed auger top cover 276285. Superseding top cover 304785 on ECN 58611 is not introduced into this catalog revision.	Engineering
	Added washer 184711 as a service part for selector valve 335341.	ECN 60543
134 John Deere 50 Series – Float Module Completion, page 383	JD level land frame 220628 superseded by 294514.	ECN 55877
	Replaced B6879 with B9030 to be consistent with the FM100 Product Sheet.	ECN 60672
135 John Deere 60/70 S/T Series – Float Module Completion, page 385	Contour master frame 294051 superseded by 347301.	ECN 62291
	Completion package B6650 and B6651 superseded by B6962 and B6963.	ECN 60225
137 John Deere 60/70 S/T Series – Hydraulic Completion, page 389	Stock available for feed auger top cover 276285. Superseding top cover 304785 on ECN 58611 is not introduced into this catalog revision.	Engineering
	Added washer 184711 as a service part for check valve 335342.	ECN 60543
140 Versatile – Float Module Completion, page 397	Completion package B6479 superseded by B6961.	ECN 60225
	Updated Versatile completion package to include FM200 transition frame, which was designed to be reverse compatible with FM100: Transition frame 304788 replaced by 347077, lever 156784 replaced by 328582, pivot 304669 replaced by 347569, latch 304980 replaced b 337311, pins 19809 and 13125 replaced by lynch pin 113561, bushing 156780 replaced by 337043. Added covers 328356 and 301629. Updated hardware. Updated illustration from 1026493 to 1038100.	ECN 62359
141 Versatile – Hydraulic Completion, page 399	Stock available for feed auger top cover 276285. Superseding top cover 304785 on ECN 58611 is not introduced into this catalog revision.	Engineering
143 Auger Conversion Kits – Fingers and Flighting, page 405	Replaced bundles B6884 and B6885 with B7343, B7344, and B7345. Updated illustration from 1033427 to 1038360.	ECN 62443

Section	Summary of Change	Internal Use Only
149 AGCO IDEAL™ Conversion Kit, page 417	Added IDEAL FM100 completion harness 311707 to list and illustration, previously left off of BOM for B6882. Updated illustration from 1033429 to 1037056.	ECN 62094
150 John Deere Conversion Kits, page 421	Contour master frame 294051 superseded by 347301.	ECN 62291
151 Rostselmash Conversion Kit, page 423	Lexion reel speed sensor harness 304199 superseded by 304982.	ECN 60705 ECN 60838
153 Auger Patch Kit, page 429	RTD repair kit 114382 superseded by 335464.	ECN 60895
155 Reel Speed Sensors, page 433	Lexion reel speed sensor harness 304199 superseded by 304982.	ECN 60705
159 (Option) Hillside Extension, page 441	Added fill extension kit 312824, which contains the contents of B6057.	ECN 60873
	Replaced screw 135873 with 320397.	ECN 62415
160 (Option) In-Cab Side Draper Speed Control Kits, page 443	Seal kit 252351 superseded by 220908.	ECN 60319
162 (Option) Tilt Harness Kit, page 449	Added section to catalog with new illustration 1037281.	ECN 61956

Introduction i
Abbreviations ii
Serial Number Breaks iii
Summary of Changes – FD1 Series and FM100 (215821 Rev. A) iv

1 Header Frame, Dividers, and Shields 1
2 Header Frame – Endshields 5
3 Flex Frame Hinges and Top-Link 7
4 Balance Linkage 9
5 Guards, Hold-Downs, and Wearplates – Single Knife, Right End 13
6 Guards, Hold-Downs, and Wearplates – Single Knife, Middle and Left End 15
7 Guards, Hold-Downs, and Wearplates – Double Knife, Right End 17
8 Guards, Hold-Downs, and Wearplates – Double Knife, Middle and Left End 19
9 Knife Components and Knifehead 21
10 Segmented Knives – Single-Knife Headers, Fine-Tooth Sections 25
11 Segmented Knives – Single-Knife Headers, Coarse-Tooth Sections 27
12 Segmented Knives – Single-Knife Headers, Ultra Coarse-Tooth Sections 31
13 Segmented Knives – Double-Knife Headers, Fine-Tooth Sections 33
14 Segmented Knives – Double-Knife Headers, Coarse-Tooth Sections 37
15 Segmented Knives – Double-Knife Headers, Ultra Coarse-Tooth Sections 41
16 Knife Drive 43
17 Knife Drive Hydraulics – Single Knife (FD125, FD130, and FD135) 47
18 Knife Drive Hydraulics – Single Knife (FD140) 49
19 Knife Drive Hydraulics – Double Knife (FD140 and FD145) 51
20 Knife Drive Box 53
21 Draper Carrier Deck and Tensioner 55
22 Draper Deflectors 61
23 Draper Drive – Manual Deck Shift 63
24 Pick-Up Reel – Single-Reel Headers (FD125) 65
25 Pick-Up Reel – Double-Reel Headers (FD130, FD135, FD140, and FD145) 69
26 Reel Endshield Components 77
27 Reel Components – Single Reel, Right Arm 79
28 Reel Components – Double Reel, Right Arm 83
29 Reel Components – Double Reel, Center Arm 87
30 Reel Components – Single/Double Reel, Left Arm 93
31 Reel Support Arms and Lift Cylinders – Center Arm 95
32 Reel Support Arms and Lift Cylinders – Outer Arms 97
33 Reel Drive Hydraulics – Lift and Fore-Aft – Single Reel (FD125) 101
34 Reel Drive Hydraulics – Lift and Fore-Aft – Double Reel (FD130, FD135, FD140, and FD145) 105
35 Electrical Components – FD1 Series 109
36 Skid Shoes – End and Center 111
37 Decals and Reflectors 113
38 Decals – Product Identification 117
39 Decals – French 119

40 Decals – Portuguese 121
41 Decals – Russian 123
42 Decals – Spanish 125
43 (Option) Brace Tube Kits 127
44 (Option) Crop Lifters 129
45 (Option) Crop Lifter Rack 131
46 (Option) Foot Switch 133
47 (Option) Multi-Crop Rapid Reel Conversion Kit 135
48 (Option) Pick-up Reel-End Fingers Kit 137
49 (Option) Pointed Guard Kit, Single Knife 139
50 (Option) Pointed Guard Kit, Double Knife 141
51 (Option) Reel Arm Extension Kit 143
52 (Option) Rice Divider Rods 145
53 (Option) Rock Retarder Kit 147
54 (Option) Short Brace Kit for Center Reel Arm / Divider Latches 149
55 (Option) Slow Speed Transport Package – Hitch Electrical 151
56 (Option) Slow Speed Transport Package – Transport Hitch 155
57 (Option) Slow Speed Transport Package – Wheels and Supports 157
58 (Option) Stabilizer Wheels 163
59 (Option) Stabilizer Wheels – Secondary 165
60 (Option) Stub Guards with Sheet Metal Hold-Downs 167
61 (Option) Stubble Lights 169
62 (Option) Sunflower Attachment – Base Kit 171
63 (Option) Sunflower Attachment – Pans 175
64 (Option) Sunflower Attachment – Deflectors 177
65 (Option) Tine Tube Reinforcing Kit 179
66 (Option) Upper Cross Auger – Left End (FD125, FD130, FD135, and FD140) – 2021 and Prior 181
67 (Option) Upper Cross Auger – Right End (FD125, FD130, FD135, and FD140) – 2021 and Prior 185
68 (Option) Upper Cross Auger – Left End (FD145) – 2021 and Prior 189
69 (Option) Upper Cross Auger – Right End (FD145) – 2021 and Prior 193
70 (Option) Upper Cross Auger – Center Support Repair Kit 197
71 (Option) Upper Cross Auger – Left End (FD125, FD130, FD135, and FD140) – 2022 199
72 (Option) Upper Cross Auger – Right End (FD125, FD130, FD135, and FD140) – 2022 203
73 (Option) Upper Cross Auger – Left End (FD145) – 2022 205
74 (Option) Upper Cross Auger – Right End (FD145) – 2022 209
75 (Option) Vertical Knife – Standard Reel Arm (2018 and Prior) 211
76 (Option) Vertical Knife – Standard Reel Arm, Left End (2019–2021) 217
77 (Option) Vertical Knife – Standard Reel Arm, Right End (2019–2021) 221
78 (Option) Vertical Knife – Standard Reel Arm, Left End (2022) 225
79 (Option) Vertical Knife – Standard Reel Arm, Right End (2022) 229
80 (Option) Vertical Knife – Short Reel Arms 235
81 (Option) Vertical Knife Hose Kits – Standard and Short Reel Arms, Single Reel 241
82 (Option) Vertical Knife Hose Kits – Standard and Short Reel Arms, Double Reel 243

83 (Option) Vertical Knife Assembly – Service Parts 245
84 Float Module Frame and Components 247
85 Feed Deck – Frame, Front Links, and Pivot Pins 249
86 Feed Deck – Draper Drive and Rollers 251
87 Feed Deck – Pans and Fillers 255
88 Float Module – Attaching Parts 257
89 Float Module – Center and Corner Fillers 259
90 Float Module – Side Fillers 261
91 Auger Assembly and Completion 263
92 Auger Assembly and Completion – Configuration 265
93 Auger Internal Components 267
94 Auger Assembly – Service Parts 269
95 Auger Float Linkage 277
96 Drives 279
97 Pump Assemblies – Identifying Pump 283
98 Pump Assembly – Bosch/Rexroth 285
99 Pump Assembly – Parker Hannifin (2022 Only) 289
100 Pump Assembly – Eaton (2022 Only) 293
101 Knife Drive Pump Service Kit 297
102 Draper Drive Pump Service Kit 299
103 Input Driveline and Support 301
104 Hydraulics – Frame Components 307
105 Hydraulics – Center-Link and Header Tilt / Reel Fore-Aft 309
106 Hydraulics – Feed Deck 311
107 Hydraulics – Drives and Header Connection 313
108 Hydraulics – Drive Manifold Assembly 317
109 Drive Manifold Assembly – Service Parts 319
110 Selector Valve 321
111 Float Linkage and Components 323
112 Float Indicator and Auto Header Height Control 327
113 Electrical Components – FM100 331
114 Decals – FM100 333
115 AGCO Challenger/Massey Ferguson – Float Module Completion 335
116 AGCO Gleaner – Float Module Completion 337
117 AGCO Gleaner – Feed Auger Conversion Parts 339
118 AGCO IDEAL™ – Float Module Completion 341
119 AGCO Challenger/Massey Ferguson and Gleaner – Hydraulic Completion 343
120 AGCO IDEAL™ – Hydraulic Completion 347
121 AGCO – Electrical Completion 351
122 Case IH and New Holland CR/CX – Float Module Completion 353
123 Case IH 2300/2500 Series – Float Module Completion 355
124 Case IH and New Holland CR/CX – Hydraulic Completion 357
125 Case IH 2300/2500 Series – Hydraulic Completion 361

126 Case IH and New Holland CR/CX – Electrical Completion 365
127 Case IH 2300/2500 Series – Electrical Completion 367
128 New Holland 10 Volt Auto Header Height Control Converter Kit 369
129 New Holland CR Fillers Conversion Kit 371
130 CLAAS Lexion 500/700 Series – Float Module Completion 373
131 CLAAS Lexion 500/700 Series – Hydraulic Completion 375
132 CLAAS Lexion 500/700 Series – Electrical Completion 379
133 CLAAS Reel Height Resistor Kit 381
134 John Deere 50 Series – Float Module Completion 383
135 John Deere 60/70 S/T Series – Float Module Completion 385
136 John Deere 50 Series – Hydraulic Completion 387
137 John Deere 60/70 S/T Series – Hydraulic Completion 389
138 John Deere 50 Series – Electrical Completion 393
139 John Deere 60/70 S/T Series – Electrical Completion 395
140 Versatile – Float Module Completion 397
141 Versatile – Hydraulic Completion 399
142 Versatile – Electrical Completion 403
143 Auger Conversion Kits – Fingers and Flighting 405
144 Gear Pump Conversion Kits 407
145 Gear Set Conversion Kits 409
146 Sprocket and Chain Conversion Kit 411
147 AGCO Challenger/Massey Ferguson Conversion Kit 413
148 AGCO Gleaner Conversion Kit 415
149 AGCO IDEAL™ Conversion Kit 417
150 John Deere Conversion Kits 421
151 Rostselmash Conversion Kit 423
152 Auger Dent Repair Kit 427
153 Auger Patch Kit 429
154 Reel Height Sensor 431
155 Reel Speed Sensors 433
156 (Option) Auger Flighting Kits 435
157 (Option) Dual Sensor Auto Header Height Control 437
158 (Option) FM100 Full Interface Filler – FD1 439
159 (Option) Hillside Extension 441
160 (Option) In-Cab Side Draper Speed Control Kits 443
161 (Option) Stripper Bars 447
162 (Option) Tilt Harness Kit 449
Index 452

1 Header Frame, Dividers, and Shields

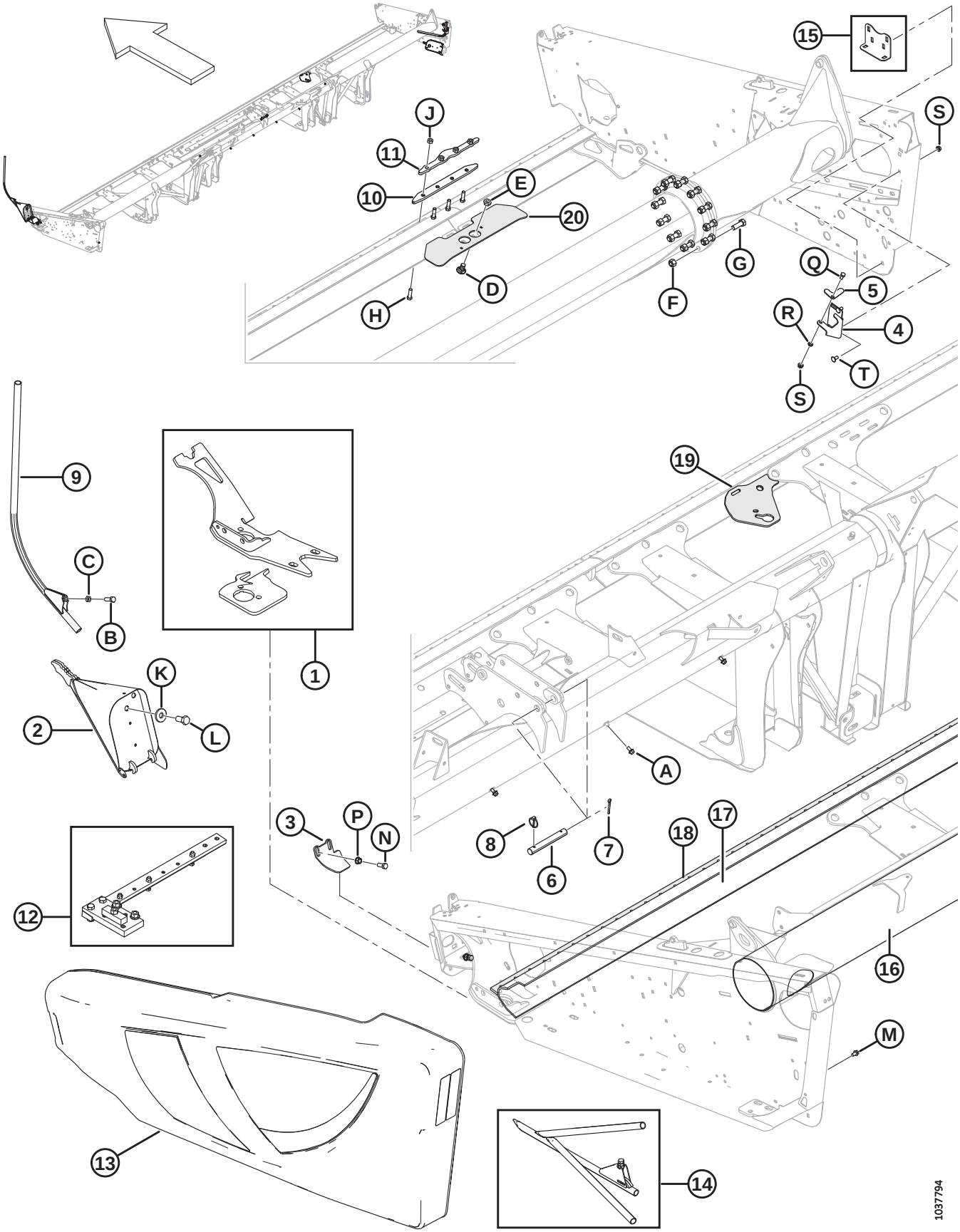

HEADER FRAME, DIVIDERS, AND SHIELDS

Ref	Part Number	Description	Qty	Serial Number
1	123751	KIT – LH WOBBLE BOX MOUNT	A/R	
	123752	KIT – RH WOBBLE BOX MOUNT	A/R	
2	123660	DIVIDER – LH WELDT	1	
	123661	DIVIDER – RH, WELDT	1	
3	245678	SHIELD – LH, GUARD	1	
	245677	SHIELD – RH, GUARD	1	
4	253499	BRACKET – DIVIDER ROD STORAGE	1	
5	132420	TAB – LOCK, DIVIDER ROD STORAGE	1	
6	125363	PIN	1	
7	18609	PIN – COTTER 1/4 DIA X 2 ZP	1	
8	102264	PIN – LYNCH 3/16 X 1-9/16	1	
9	120127	DIVIDER – TUBE WELDT	2	
10	258150	BAR – CUTTERBAR SPLICE [1]	1	
11	255442	BAR – CUTTERBAR SPLICE [1]	1	
12	174391	JIG ASSY. – WOBBLE BOX MOUNT, 25–45 FT [2]	A/R	
13	REF	ENDSHIELD C/W REFLECTORS [3]		
14	REF	DIVIDER – RICE ROD ASSY [4]		
15	REF	ANGLE – DIVIDER, STORAGE [5]	OPT	
16	294673	KIT – TUBE BACK, REPAIR SECTION, 1500 MM LG	A/R	
17	294671	KIT – CUTTERBAR, REPAIR PIECE, 1300 MM LG (30–45 FT)	A/R	
	294681	KIT – CUTTERBAR, REPAIR PIECE, 4491 MM LG (30–45 FT)	A/R	
18	294672	KIT – BAR GUARD, 1530 MM LG	A/R	
19	**335752**	**KIT – SUPPORT BRACKET [6]**	**A/R**	
20	**125418**	**SUPPORT – SPLIT CBAR CONNECTION WELDT (40 FT SPLIT FRAME HDR ONLY)**	**1**	
	253552	**SUPPORT – SPLIT CBAR CONNECTION WELDT (45 FT SPLIT FRAME HDR ONLY)**	**1**	
A	21821	BOLT – HH FLG (SER FACE) 3/8 NC X 0.75 GR 5 ZP [7]		
B	18723	BOLT – HH 1/2 NC X 1.5 LG TFL GR 5 ZP		
C	21056	NUT – HEX JAM 1/2-13 UNC GR 5 ZP		
D	**103562**	**BOLT – RHSN 5/8 NC X 1.25 GR 5 ZP**		
E	21941	NUT – HEX LOCK JAM (DT) 5/8-11 UNC GR 5 ZP		
F	134438	NUT – HEX LOCK DT 5/8-11 GR 8 ZP		
G	135340	BOLT – HH 5/8 NC X 1.75 LG GR 8 ZP		
H	113814	BOLT – HH 7/16 NC X 1.5 LG GR.5 ZP		

1. Split-frame headers only.
2. Required to properly install wobble box mount (MD #123751 or 123752). Comes complete with instructions.
3. Refer to Section *2 Header Frame – Endshields, page 5*.
4. Refer to Section *52 (Option) Rice Divider Rods, page 145*.
5. Refer to Section *54 (Option) Short Brace Kit for Center Reel Arm / Divider Latches, page 149*.
6. Kit is used to replace a worn out or broken support bracket. Welding is required.
7. Refer to Section *23 Draper Drive – Manual Deck Shift, page 63*.

HEADER FRAME, DIVIDERS, AND SHIELDS

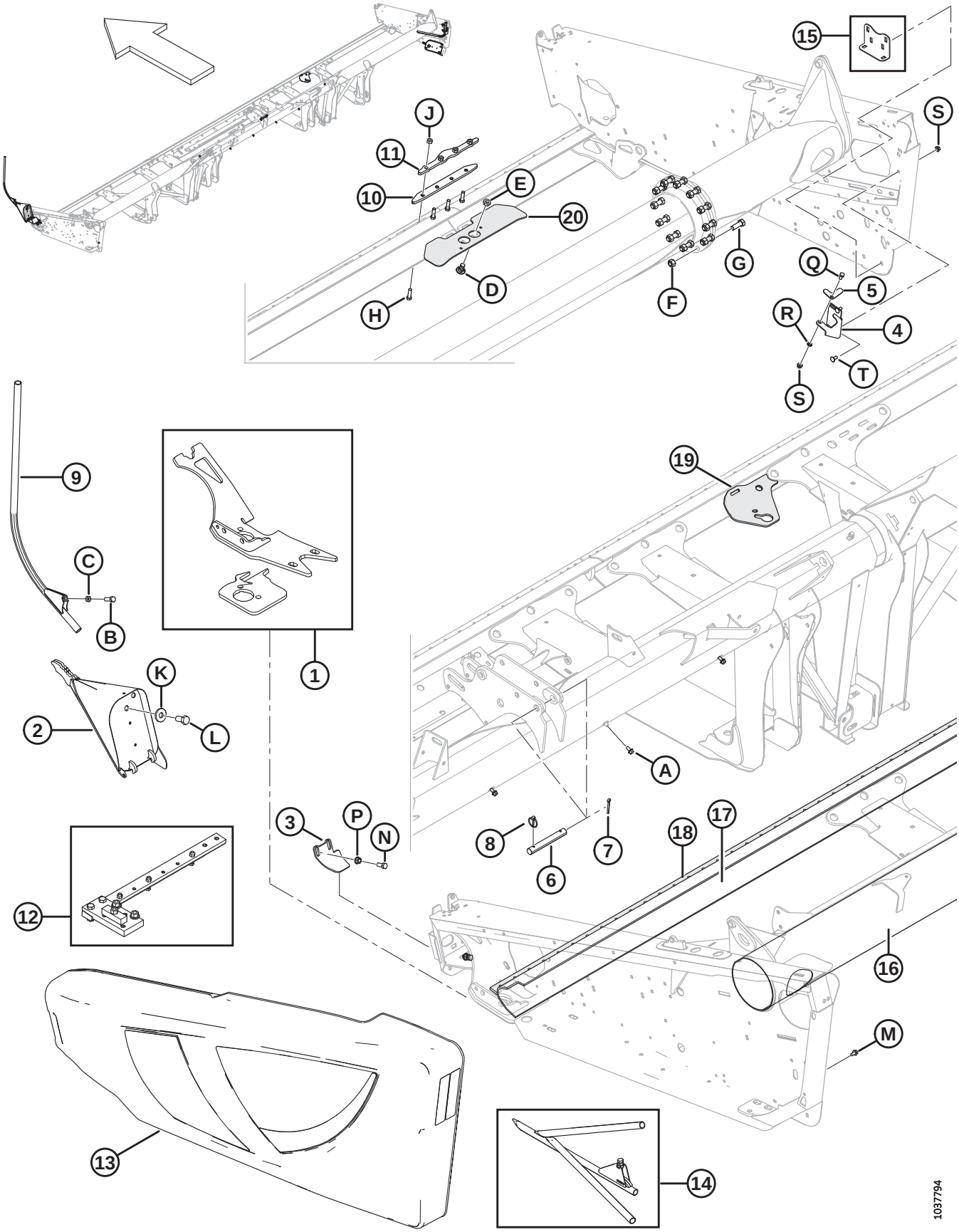

HEADER FRAME, DIVIDERS, AND SHIELDS

Ref	Part Number	Description	Qty	Serial Number
J	18654	NUT – HEX 7/16-14 UNC GR 5 ZP		
K	6647	WASHER – FLAT		
L	135579	BOLT – HEX HD 3/4-16 UNF		
M	101898	SCREW – HEX WASH HD THD ROLLING 3/8 NC X 5/8		
N	21491	BOLT – HH 1/2 NC X 1.25 LG GR 5 ZP		
P	21383	NUT – FLANGE .500-13 UNC (SER FACE)		
Q	21567	BOLT – HEX HD .375-16 UNC X 0.75 LG		
R	18637	WASHER – REG. LOCK 3/8 IN. NOM. I.D. ZP		
S	30228	NUT – FLANGE DT SMTH FACE 0.375-16 UNC		
T	21863	BOLT – RHSSN 3/8 NC X 0.75 LG GR 5 ZP		

2 Header Frame – Endshields

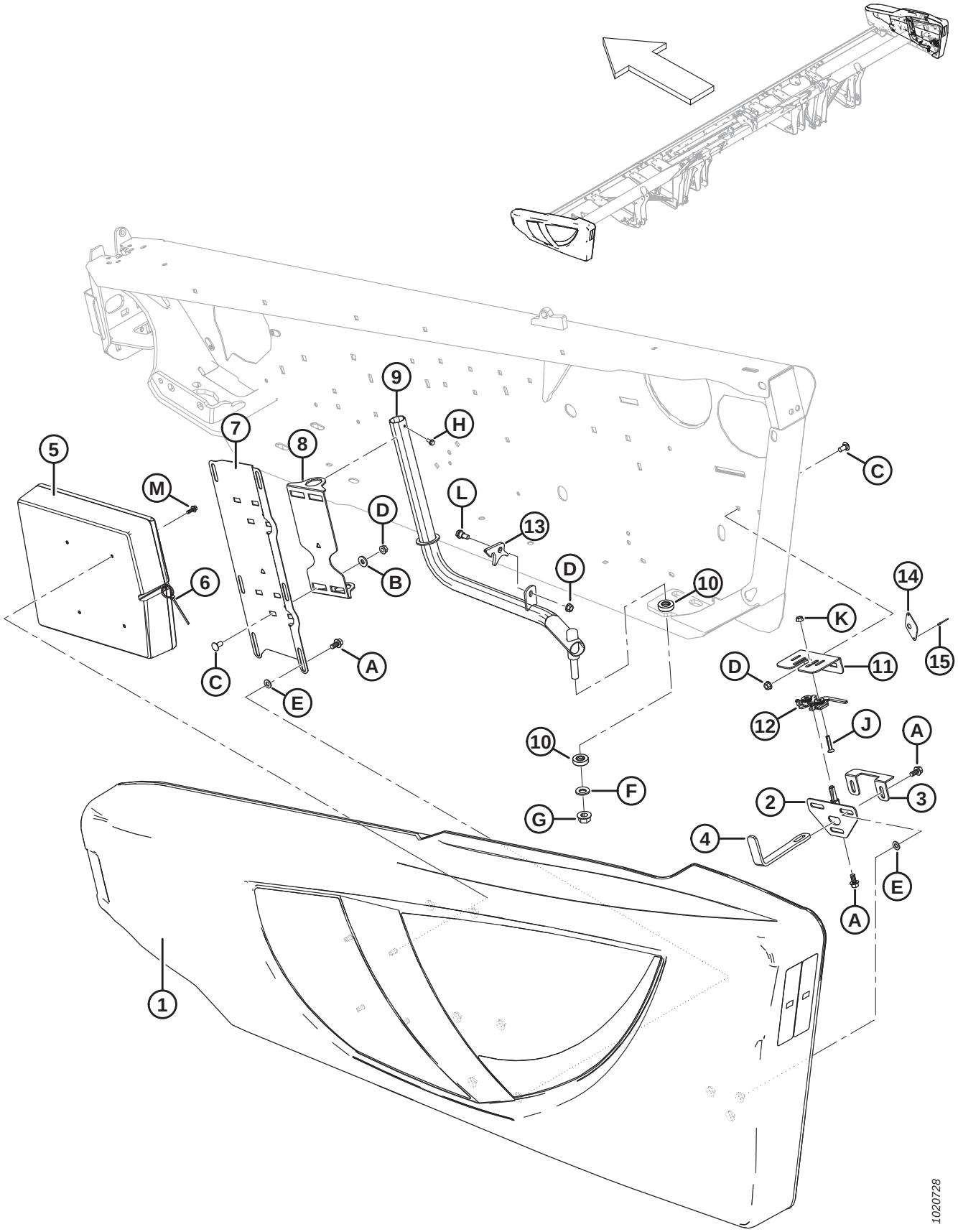

HEADER FRAME – ENDSHIELDS

Ref	Part Number	Description	Qty	Serial Number
1	255004	SHIELD – LH, C/W TEE NUTS, BLACK [8]	1	
	255019	SHIELD – RH, C/W TEE NUTS, BLACK [8]	1	
	304560	SHIELD ASSY – RED, LH, BLACK ACCENT [8]	1	
	304561	SHIELD ASSY – RED, RH, BLACK ACCENT [8]	1	
	165524	REFLECTOR – RED, 230 MM [9]		
2	253624	PIN – ENDSHIELD LATCH WELDT	2	
3	253627	RETAINER – ENDSHIELD	2	
4	253164	SUPPORT – ENDSHIELD LATCH	2	
5	220107	CASE – MANUAL (LH ENDSHIELD ONLY)	1	
	164009	SOCKET – TORX PLUS IP 27	A/R	
6	21763	FASTENER – CABLE TIE (BLACK)	1	
7	253297	SUPPORT – LH SHIELD	1	
	253298	SUPPORT – RH SHIELD	1	
8	253299	PIVOT – SHIELD	2	
9	255678	TUBE WELDMENT LH SHIELD	1	
	255679	TUBE WELDMENT RH SHIELD	1	
10	125176	BEARING – THRUST	4	
11	253601	SUPPORT – ENDSHIELD LATCH LH	1	
	253602	SUPPORT – ENDSHIELD LATCH RH	1	
12	134003	ASSY – STIRRUP LATCH LH	1	
	134002	ASSY – STIRRUP LATCH RH	1	
13	255041	LATCH – ENDSHIELD	2	
14	165858	GUIDE – ENDSHIELD LATCH (EXPORT ONLY)	1	
15	14338	RIVET – BLIND 1/8 X .125 (EXPORT ONLY)	2	
A	21821	BOLT – HH FLG (SER FACE) 3/8 NC X 0.75 GR 5 ZP		
B	20535	WASHER – FLAT		
C	21863	BOLT – RHSSN 3/8 NC X 0.75 LG GR 5 ZP		
D	30228	NUT – FLANGE DT SMTH FACE 0.375-16 UNC		
E	18598	WASHER – SAE FLAT 13/32 I.D. X 13/16 IN. O.D. ZP		
F	184718	WASHER – CON SPRING M16 STL SAE 1050-1075		
G	50225	NUT – FLANGE DT SMTH FACE .625-11 UNC		
H	21055	SCREW – SELF TAP HEX WASH HD 1/4 NC X 1/2		
J	30504	SCREW – FLAT CSK MACH 5/16 NC X 1-1/2 LG GR 5 ZP		
K	30280	NUT – FLG SIDE LK SMTH FACE 5/16 NC GR 5 ZP		
L	172259	BOLT – SHOULDER .375-16 UNC		
M	NSS	BOLT – HH SER FLG 1/4-20 X 0.625-GR5-AA3L		

8. For endshield decals, refer to Section *38 Decals – Product Identification, page 117*.
9. Refer to Section *37 Decals and Reflectors, page 113*. Reflector (MD #165524) is used on the right endshield only.

3 Flex Frame Hinges and Top-Link

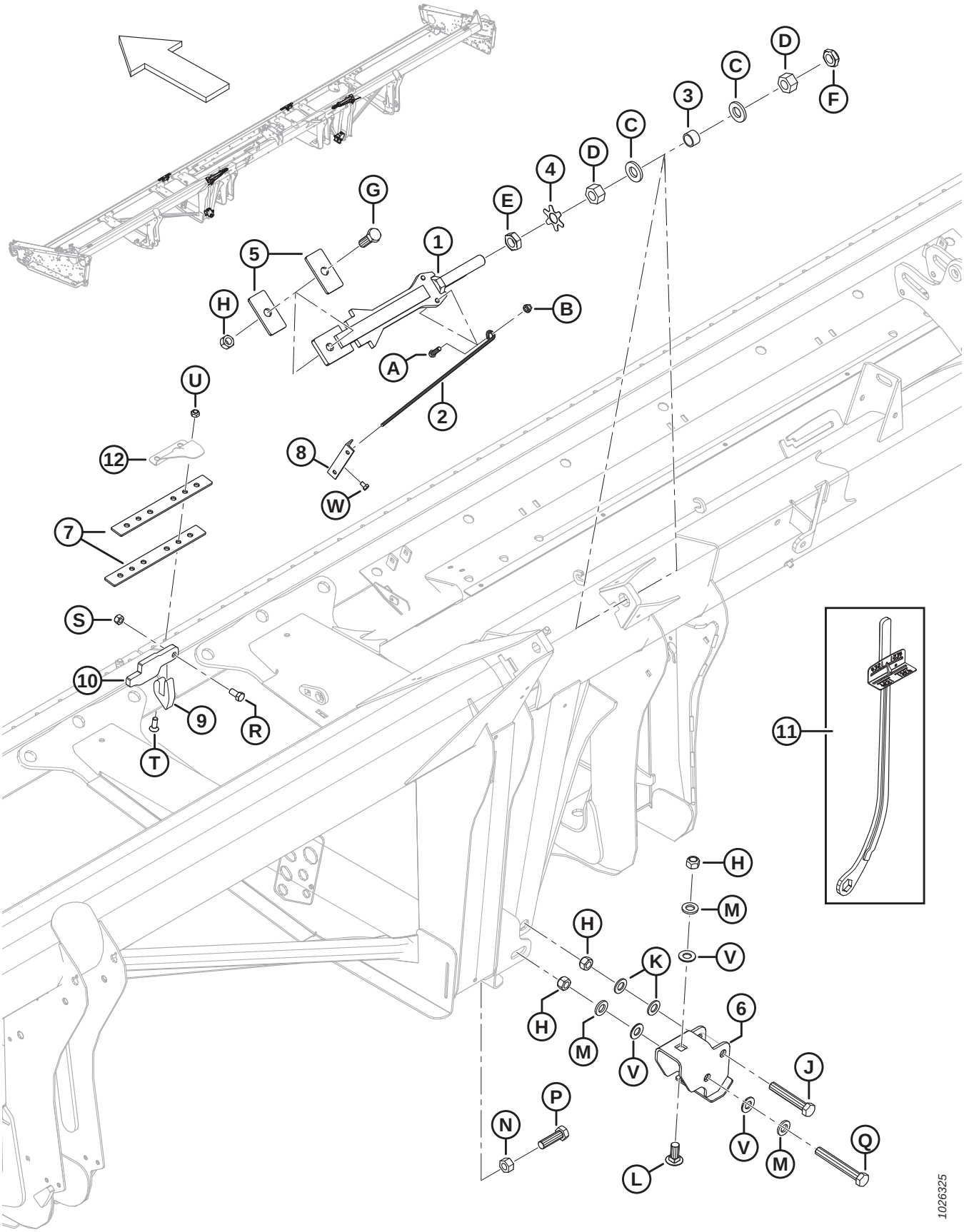

FLEX FRAME HINGES AND TOP-LINK

Ref	Part Number	Description	Qty	Serial Number
1	**335638**	**BAR WELDMENT – STOP LINK**	**2**	
2	132246	HANDLE – SPRING	2	
3	132254	SPACER	2	
4	220554	PLATE – WASHER TAB 1 IN. NUT	2	
5	132257	BAR – STOP	4	
6	172976	CHANNEL – HINGE WELDT	2	
7	132906	BAR – FLEX	4	
8	165594	GUIDE – PLASTIC	2	
9	294674	KIT – LUG HINGE	2	
10	294675	KIT – BAR HINGE	2	
11	311859	TOOL – WRENCH WELDMENT	A/R	
12	REF	COVER – HINGE AND SPLIT [10]		
A	21264	BOLT – HH 3/8 NC X 1.25 LG GR 5 ZP		
B	30228	NUT – FLANGE DT SMOOTH FACE 0.375-16 UNC		
C	31774	WASHER – FLAT		
D	123755	NUT – HEX 1.0-14 UNS GR 5 ZP		
E	123756	NUT – HEX JAM 1.0-14 UNS GR 5 ZP		
F	220187	NUT – JAM (DIST THD) 1.0-14 UNS GR C		
G	30512	BOLT – HH 3/4 NC X 2.0 LG GR 5 ZP		
H	18689	NUT – HEX LOCK DT .750-10 UNC		
J	120703	BOLT – HH, SPECIAL 3/4 NC X 4.5 LG GR 5 ZP		
K	18601	WASHER – SAE FLAT 13/16 I.D. X 1.5 IN. O.D. ZP		
L	252517	BOLT – RHSN 3/4-10 X 1.75-GR5-AA1J		
M	21540	WASHER – HARDENED		
N	18593	NUT – HEX 3/4-10 UNC GR 5 ZP		
P	172924	BOLT – HH 3/4 NC X 2.5 LG TFL GR 5 ZP		
Q	30549	BOLT – HH 3/4 NC X 5.5 LG GR 5 ZP		
R	21575	BOLT – HH 1/2 NC X 1.0 LG GR 5 ZP		
S	18697	NUT – HEX LOCK DT .500-13 UNC		
T	135315	SCREW – CSK FLAT SOCK HD, 7/16 X 1.25 LG GR 5 ZN		
U	20213	NUT – HEX LOCK DT 7/16-14 UNC ZN		
V	176009	WASHER – NORDLOCK 3/4 IN. SP		
W	111099	BOLT – HEX HD 5/16 NC X 0.5 LG GR 5 ZP		

10. Refer to Section *6 Guards, Hold-Downs, and Wearplates – Single Knife, Middle and Left End, page 15*.

4 Balance Linkage

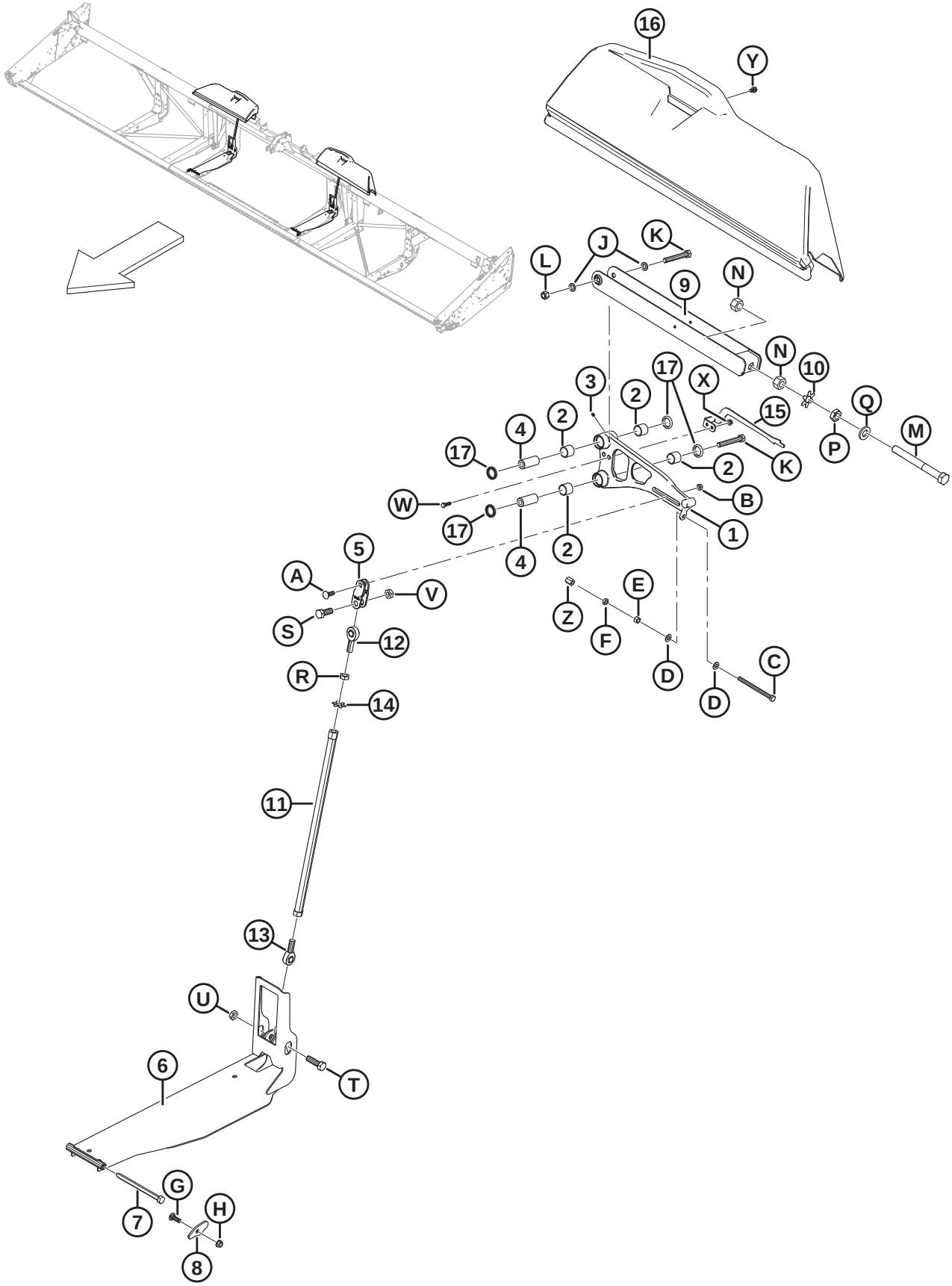

BALANCE LINKAGE

Ref	Part Number	Description	Qty	Serial Number
1	304917	ASSY – BELL CRANK, 25 AND 30 FT [11]	2	
	304918	ASSY – BELL CRANK, 35 FT [11]	2	
	304916	ASSY – BELL CRANK, 40 FT SK / 40 FT RH DK [12]	2	
	304919	ASSY – BELL CRANK, 45 FT RH / 40 FT LH DK [11]	1	
	304920	ASSY – BELL CRANK, 45 FT LH [11]	1	
2	304307	BEARING – GAGE ROLL NEEDLE 38 MM [13]	8	
	100500	BEARING – NEEDLE (2019 AND PRIOR) [14]	A/R	–371189
3	18671	FITTING – LUBE 1/4-28 UNF	4	
4	145492	PIN – BELL CRANK	4	
5	172896	CLEVIS – BELL CRANK MACHINED	2	
6	304090	CHANNEL WELDT – BOTTOM LINK	2	
7	174418	PIN – HEX HD 5/8 X 8 LG	2	
8	174416	PLATE – FLOAT BOLT KEEPER	2	
9	172480	SUPPORT – LINKAGE WELDT	2	
10	220554	PLATE – WASHER TAB 1 IN. NUT	2	
11	172830	TUBE WELDMENT – COMPRESSION LINK	2	
12	172826	ROD END – LINK, TEFLON LINER (RH THREAD)	2	
13	172831	ROD END – LINK, TEFLON LINER (LH THREAD)	2	
14	220553	PLATE – WASHER TAB 3/4 IN. NUT	2	
15	229013	INDICATOR – FLEX WING, LH	1	
	229014	INDICATOR – FLEX WING, RH	1	
	229019	INDICATOR – FLEX WING, LH 45 FT	1	
16	279832	SHIELD – LH BELLCRANK, 25 AND 30 FT	1	
	294062	SHIELD – RH BELLCRANK, 25 AND 30 FT	1	
	294059	SHIELD – LH BELLCRANK, 35 FT	1	
	279797	SHIELD – RH BELLCRANK, 35 FT	1	
	294060	SHIELD – LH BELLCRANK, 40 AND 45 FT	1	
	294057	SHIELD – RH BELLCRANK, 40 AND 45 FT	1	
17	113222	SEAL	8	
A	21469	BOLT – RHSN 1/2 NC X 1.5 LG GR 5 ZP		
B	137727	NUT – HEX JAM, DIST THD. 1/2-13 UNC GR 5 ZP		
C	50226	BOLT – HH 1/2 NC X 6.5 TFL GR 5 ZP		
D	135369	WASHER – 1/2 IN. HARDENED		

11. Includes four bearings (MD #304307), four seals (MD #113222), and two lube fittings (MD #18671).
12. Includes four bearings (MD #304307), four seals (MD #113222), and two lube fittings (MD #18671). 40-foot single knife requires two of the same supports (MD #304916) for the right and left. 40-foot double knife requires two different supports: right (MD #304916) and left (MD #304919).
13. Gage roll needle bearing (MD #304307) is NOT compatible with model year 2019 and prior single-bearing bell crank assemblies. To service model year 2019 and prior machines, order needle bearing (MD #100500) or a complete bell crank assembly.
14. Needle bearing (MD #100500) is a service part only for model year 2019 and prior machines with single-bearing bell crank assemblies. For model year 2020 and later machines, or machines that have been serviced with double-bearing bell crank assemblies, order gage roll needle bearing (MD #304307).

BALANCE LINKAGE

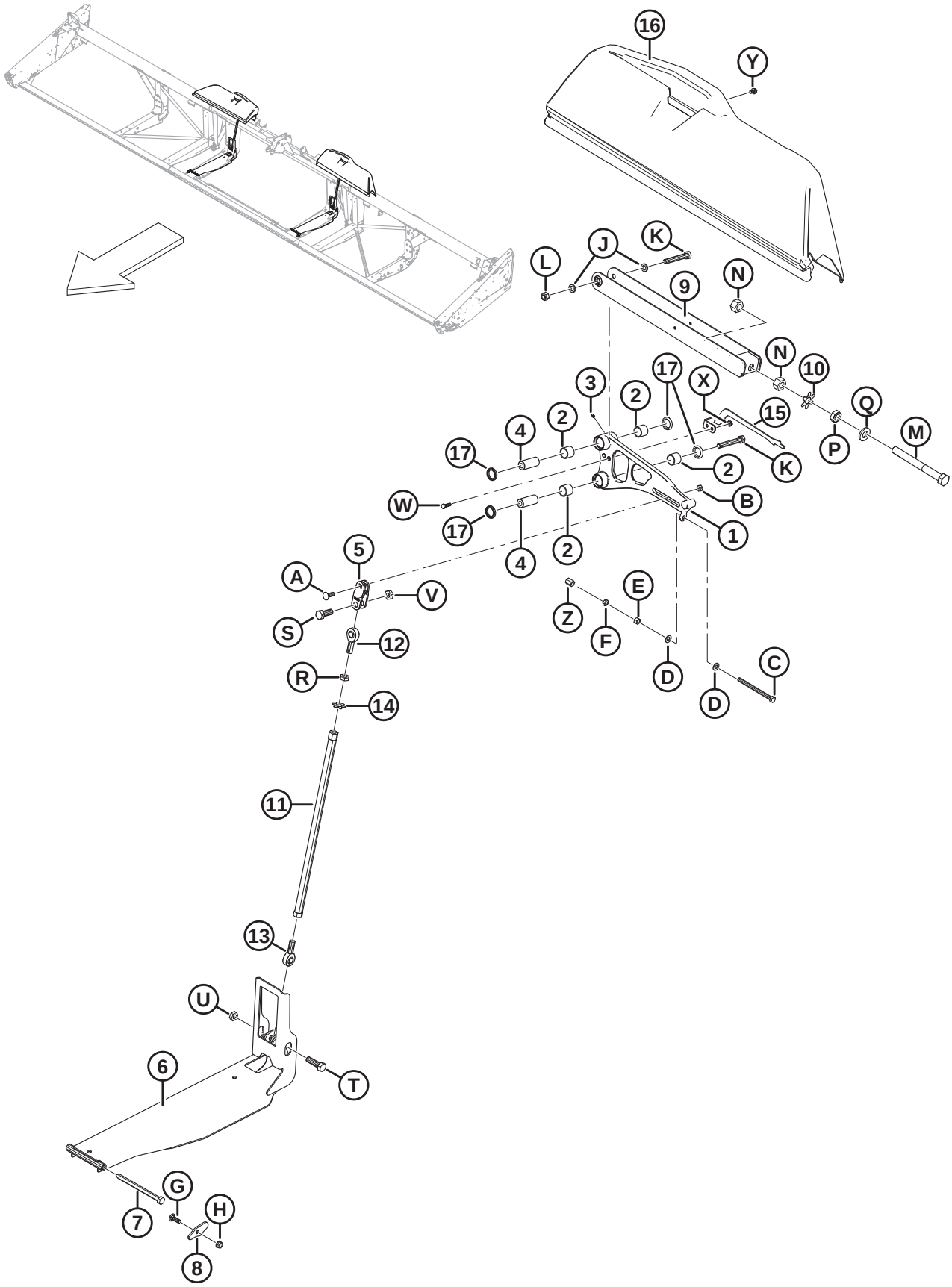

BALANCE LINKAGE

Ref	Part Number	Description	Qty	Serial Number
E	18591	NUT – HEX 1/2-13 UNC GR 5 ZP		
F	21056	NUT – HEX JAM 1/2-13 UNC GR 5 ZP		
G	21469	BOLT – RHSN 1/2 NC X 1.5 LG GR 5 ZP		
H	50186	NUT – FLG LOCK SM FACE DT 0.500-13 UNC GR 5		
J	103361	WASHER – FLAT		
K	135464	BOLT – HH 5/8 NC X 4.5 LG GR 8 ZP		
L	18666	NUT – HEX LOCK DT 5/8-11 UNC ZP		
M	123788	BOLT – HH 1.0-14 UNF X 9.5 LG.(6 IN. THD)		
N	123755	NUT – HEX 1.0-14 UNF GR 5 ZP		
P	123756	NUT – HEX JAM 1-14 UNF GR 5 ZP		
Q	31774	WASHER – FLAT		
R	7674	NUT – HEX JAM 3/4-16 UNF GR 5 ZP		
S	30512	BOLT – HH 3/4 NC X 2.0 LG GR 5 ZP		
T	19957	BOLT – HH 3/4 NC X 2.5 LG GR 5 ZP		
U	102636	NUT – HEX DT .750-10 UNC		
V	123517	NUT – HEX JAM DIST THRD 3/4-10 UNC GR 5 ZP		
W	21264	BOLT – HH 3/8 NC X 1.25 LG GR 5 ZP		
X	30228	NUT – FLANGE DT SMOOTH FACE 0.375-16 UNC		
Y	101898	SCREW – HEX WASH HD THD ROLLING 3/8 NC X 5/8		
Z	252870	NUT – HEX COUPLING 1/2-13 X GR5-AA1J		

5 Guards, Hold-Downs, and Wearplates – Single Knife, Right End

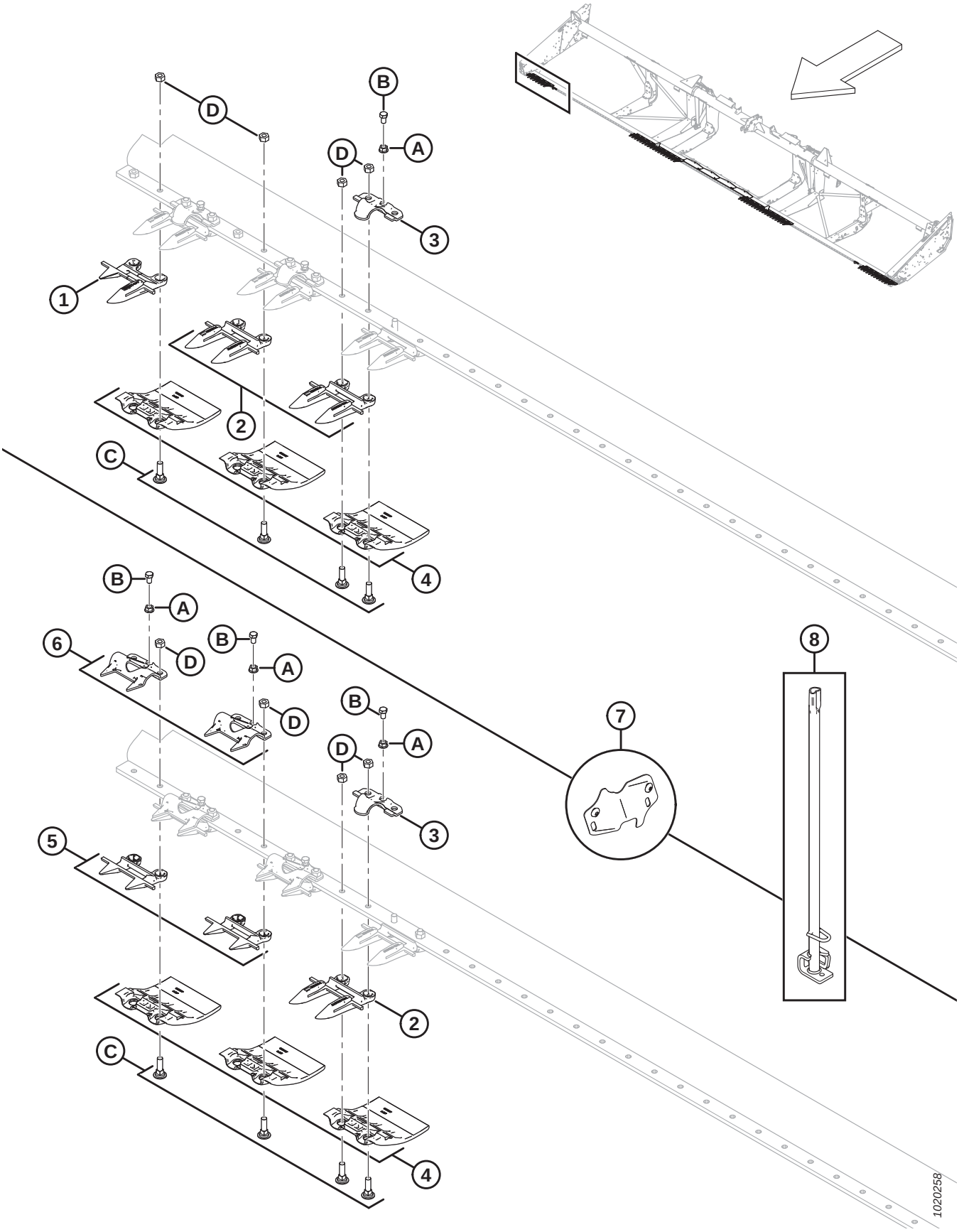

GUARDS, HOLD-DOWNS, AND WEARPLATES – SINGLE KNIFE, RIGHT END

NOTE:

Illustration; TOP: Single knife, right end with pointed guards, BOTTOM: Single knife, right end with end stubs.

Ref	Part Number	Description	Qty	Serial Number
1	118302	SICKLE GUARD – RH, OUTBOARD	1	
2	118344	SICKLE GUARD – W/ POINTS [15]		
3	118162	CLIP – HOLD-DOWN [16]		
4	129297	WEARPLATE – UNDER CUTTERBAR, POLYETHYLENE [17]		
5	118346	SICKLE GUARD – STUB, W/ WEARBAR	4	
6	118351	GUIDE – SHEET METAL STUB, WITH HOLE	4	
7	220103	KIT – COVER, KNIFE CUT OUT (25–45 FT, STUB) [18]	1	
	220101	KIT – COVER, KNIFE CUT OUT (25–45 FT) [19]	1	
8	140135	TOOL WELDT – GUARD STRAIGHTENING TOOL	1	
A	118193	NUT – FLANGE HEX .375 UNC		
B	118154	BOLT – HH 3/8 NC X 5/8 TFL GR 8 ZP		
C	120558	BOLT – RHSN SPECIAL 7/16 NC X 1.5 LG GR 5 ZP		
D	18654	NUT – HEX 7/16-14 UNC GR 5 ZP		

15. Complete quantities: 25 ft. = 45, 30 ft. = 55, 35 ft. = 65, 40 ft. = 75, 25 ft. with stub ends = 42, 30 ft. with stub ends = 52, 35 ft. with stub ends = 62.
16. Complete quantities: 25 ft. = 24, 30 ft. = 29, 35 ft. = 33, 40 ft. = 39, 25 ft. with stub ends = 20, 30 ft. with stub ends = 26, 35 ft. with stub ends = 30.
17. Complete quantities: 25 ft. = 50, 30 ft. = 60, 35 ft. = 70, 40 ft. = 80.
18. Used with stub guards and sheet metal hold-downs. Includes two covers and screws (MD #105137).
19. Used with pointed guards and forged hold-downs. Includes two covers and screws (MD #105137).

6 Guards, Hold-Downs, and Wearplates – Single Knife, Middle and Left End

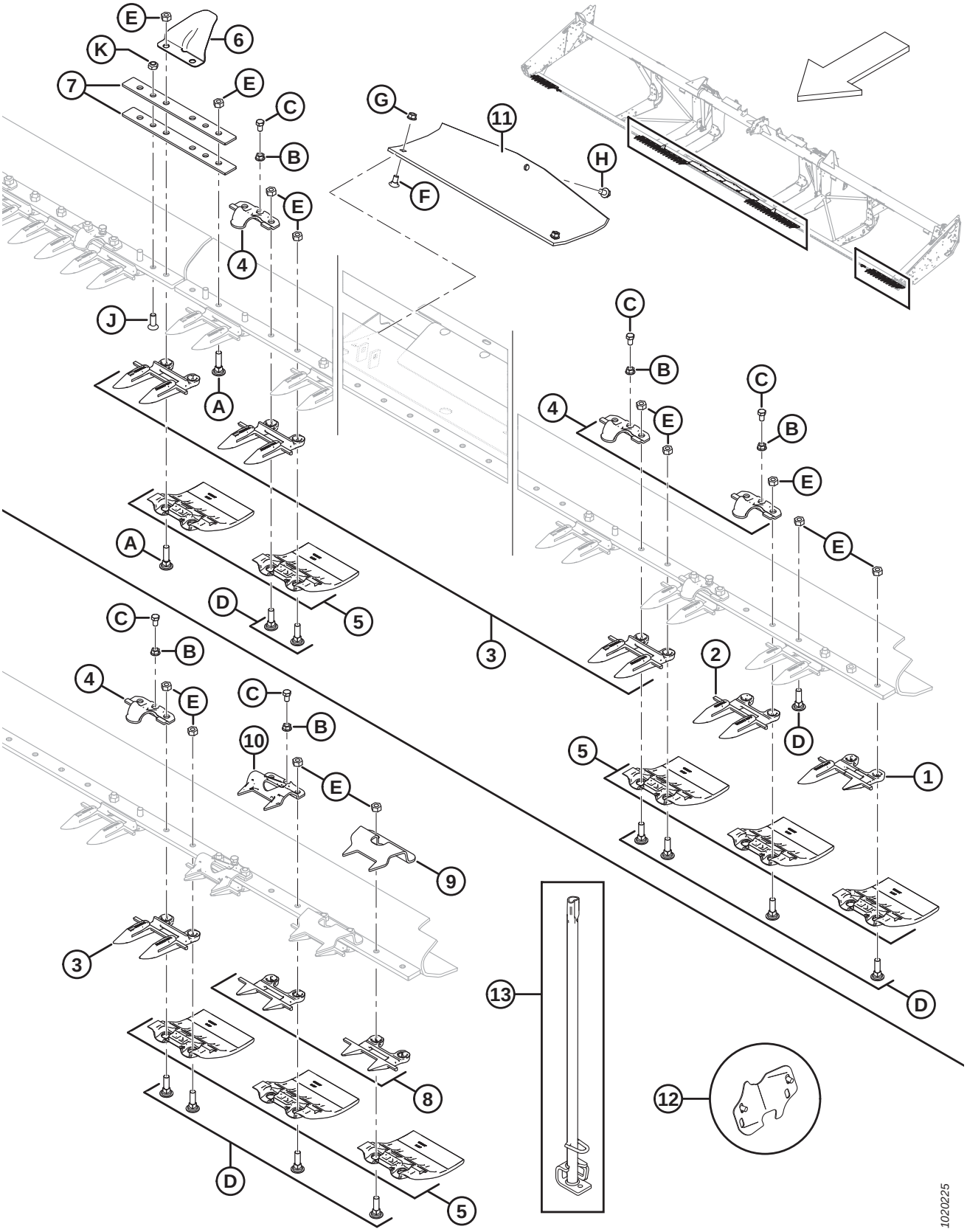

GUARDS, HOLD-DOWNS, AND WEARPLATES – SINGLE KNIFE, MIDDLE AND LEFT END

NOTE:

Illustration; TOP: Single knife, middle and left end (pointed), BOTTOM: Single knife, left end with end stubs.

Ref	Part Number	Description	Qty	Serial Number
1	118301	SICKLE GUARD – LH, OUTBOARD	1	
2	118345	SICKLE GUARD – W/ POINTS, W/O WEARBAR	3	
3	118344	SICKLE GUARD – W/ POINTS [20]		
4	118162	CLIP – HOLD-DOWN [21]		
5	129297	WEARPLATE – UNDER CUTTERBAR, POLYETHYLENE [22]		
6	220114	COVER – HINGE AND SPLIT [23]	2	
7	132906	BAR – FLEX	4	
8	118347	SICKLE GUARD – STUB, W/O WEARBAR	4	
9	165209	GUIDE – SHEET METAL STUB, KNIFEHEAD END	2	
10	118351	GUIDE – SHEET METAL STUB, WITH HOLE	2	
11	151551	SHOE – SKID, TRANSITION PAN	4	
12	220103	KIT – COVER, KNIFE CUT OUT (25–45 FT, STUB) [24]	1	
	220101	KIT – COVER, KNIFE CUT OUT (25–45 FT) [25]	1	
13	140135	TOOL WELDT – GUARD STRAIGHTENING TOOL	1	
A	120639	BOLT – RHSN SPECIAL 7/16 NC X 1.75 LG GR 5 ZP		
B	118193	NUT – FLANGE HEX .375 UNC		
C	118154	BOLT – HH 3/8 NC X 5/8 TFL GR 8 ZP		
D	120558	BOLT – RHSN SPECIAL 7/16 NC X 1.5 LG GR 5 ZP		
E	18654	NUT – HEX 7/16-14 UNC GR 5 ZP		
F	21472	BOLT – RHSN 3/8 NC X 0.75 GR 5 ZP		
G	30228	NUT – FLANGE DT SMOOTH FACE 0.375-16 UNC		
H	101898	SCREW – HEX WASH HD THD ROLLING 3/8 NC X 5/8		
J	135315	SCREW – CSK FLAT SOCK HD, 7/16 X 1.25 LG GR 5 ZN		
K	20213	NUT – HEX LOCK DT 7/16-14 UNC ZN		

20. Complete quantities: 25 ft. = 45, 30 ft. = 55, 35 ft. = 65, 40 ft. = 75, 25 ft. with stub ends = 42, 30 ft. with stub ends = 52, 35 ft. with stub ends = 62.
21. Complete quantities: 25 ft. = 24, 30 ft. = 29, 35 ft. = 33, 40 ft. = 39, 25 ft. with stub ends = 20, 30 ft. with stub ends = 26, 35 ft. with stub ends = 30.
22. Complete quantities: 25 ft. = 50, 30 ft. = 60, 35 ft. = 70, 40 ft. = 80.
23. Quantity of three required for 40 ft. split frame (export). For 40 ft. split frame specific hardware, refer to Section *7 Guards, Hold-Downs, and Wearplates – Double Knife, Right End, page 17*.
24. Used with stub guards and sheet metal hold-downs. Includes two covers and screws (MD #105137).
25. Used with pointed guards and forged hold-downs. Includes two covers and screws (MD #105137).

7 Guards, Hold-Downs, and Wearplates – Double Knife, Right End

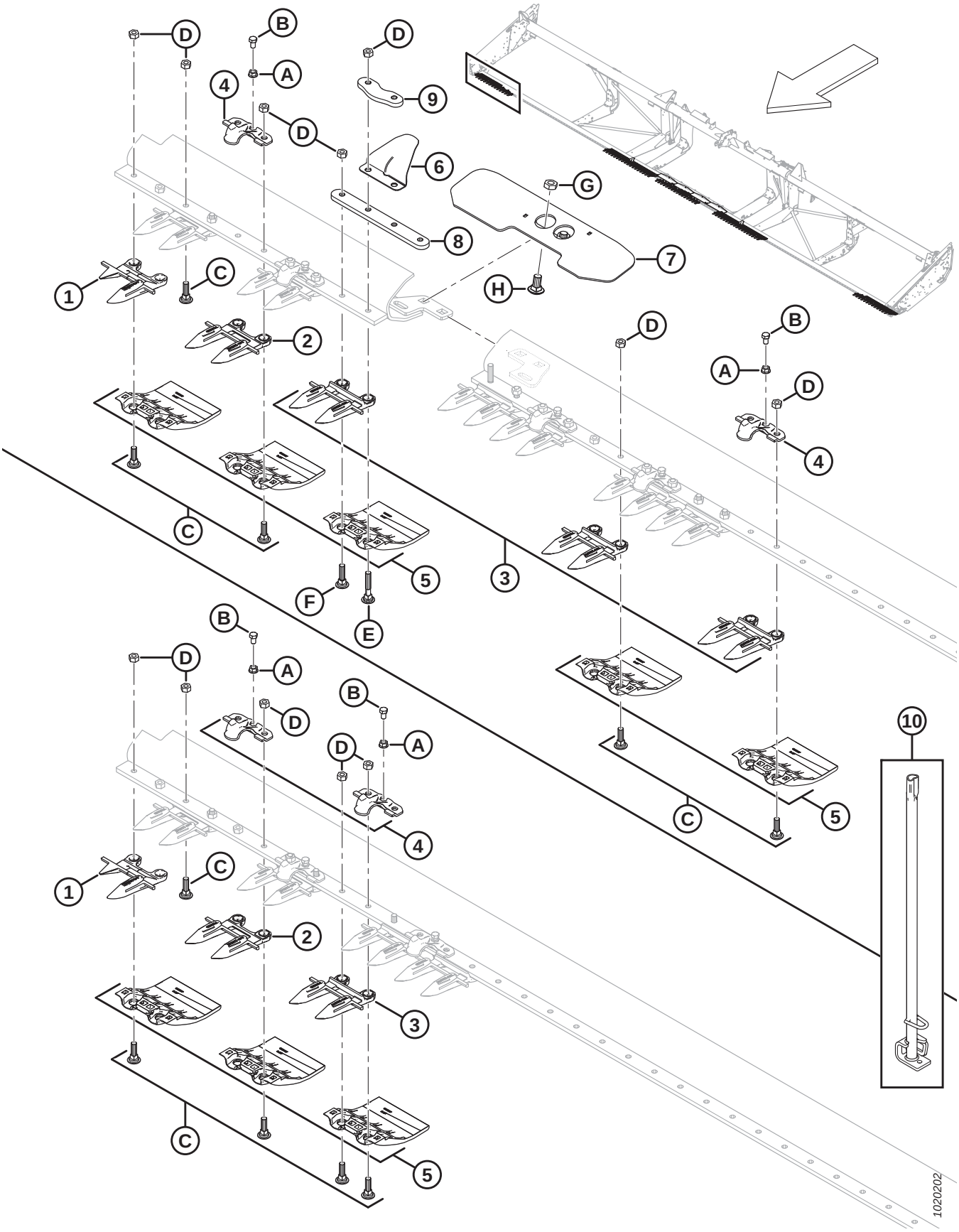

NOTE:

Illustration; TOP: Double knife, split frame right end, BOTTOM: Double knife, standard right end.

Ref	Part Number	Description	Qty	Serial Number
	B6677	KIT – STUB GUARDS AND SM HOLD DOWNS 30 FT FD [26]		
	B6678	KIT – STUB GUARDS AND SM HOLD DOWNS 35 FT FD [26]		
	B6679	KIT – STUB GUARDS AND SM HOLD DOWNS 40 FT FD [26]		
	B6680	KIT – STUB GUARDS AND SM HOLD DOWNS 45 FT FD [26]		
1	118302	SICKLE GUARD – RH, OUTBOARD	1	
2	118345	SICKLE GUARD – W/ POINTS, W/O WEARBAR (3 PER END)	3	
3	118344	SICKLE GUARD – W/ POINTS [27]		
4	118162	CLIP – HOLD-DOWN [28]		
5	129297	WEARPLATE – UNDER CUTTERBAR, POLYETHYLENE [29]		
6	220114	COVER – HINGE AND SPLIT (SPLIT FRAME HDR ONLY)	1	
7	125418	SUPPORT – SPLIT CBAR CONNECTION WELDT (40 FT SPLIT FRAME HDR ONLY)	1	
	253552	SUPPORT – SPLIT CBAR CONNECTION WELDT (45 FT SPLIT FRAME HDR ONLY)	1	
8	294460	BAR – CUTTERBAR SPLICE (SPLIT FRAME HDR ONLY)	1	
9	220115	BAR – CUTTERBAR SPLICE (SPLIT FRAME HDR ONLY)	1	
10	140135	TOOL WELDT – GUARD STRAIGHTENING TOOL	1	
A	118193	NUT – FLANGE HEX .375 UNC		
B	118154	BOLT – HH 3/8 NC X 5/8 TFL GR 8 ZP		
C	120558	BOLT – RHSN SPECIAL 7/16 NC 1.5 LG GR 5 ZP		
D	18654	NUT – HEX 7/16-14 UNC GR 5 ZP		
E	279575	BOLT – RHSN SPECIAL 7/16 NC X 2.5 LG GR 5 ZP		
F	120639	BOLT – RHSN SPECIAL 7/16 NC X 1.75 LG GR 5 ZP		
G	21941	NUT – HEX LOCK JAM (END DT THD) 5/8-11 UNC GR 5 ZP		
H	103562	BOLT – RHSN 5/8 NC X 1.25 GR 5 ZP		

26. Stub Guards with Sheet Metal Hold-Downs kits are designed for use with 30–35 foot export flex headers and 40–45 foot export split frame flex headers. For service parts, refer to Section *60 (Option) Stub Guards with Sheet Metal Hold-Downs, page 167*. Kits available through Whole Goods only.
27. Complete cutterbar quantities: 40 ft. = 71, 45 ft. = 81.
28. Complete cutterbar quantities: 40 ft. = 38, 45 ft. = 42, 45 ft. split frame (export) = 43.
29. Complete cutterbar quantities: 40 ft. = 80, 45 ft. = 90.

8 Guards, Hold-Downs, and Wearplates – Double Knife, Middle and Left End

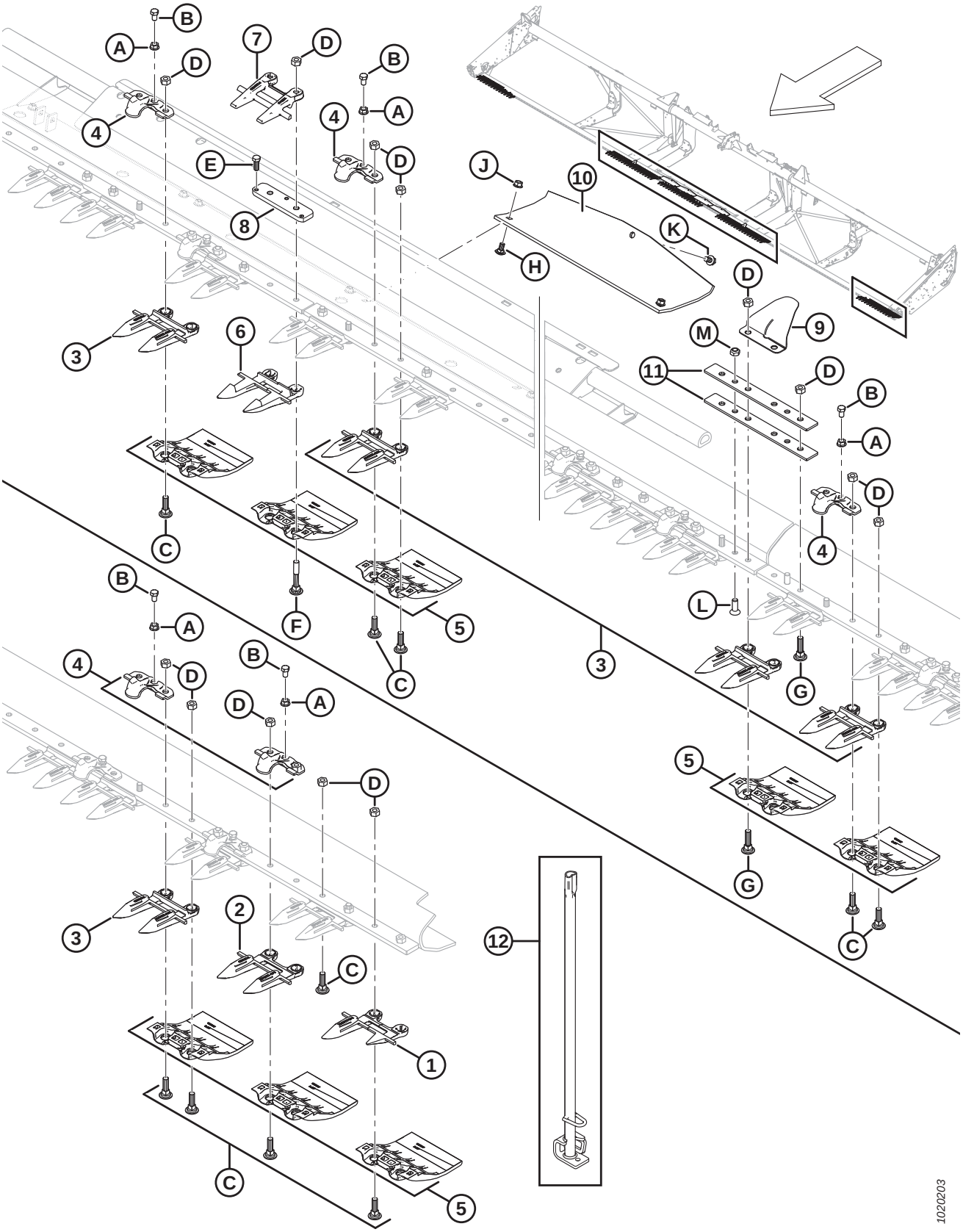

NOTE:

Illustration; TOP: Double knife, middle, BOTTOM: Double knife, left end.

Ref	Part Number	Description	Qty	Serial Number
	B6677	KIT – STUB GUARDS AND SM HOLD DOWNS 30 FT FD [30]		
	B6678	KIT – STUB GUARDS AND SM HOLD DOWNS 35 FT FD [30]		
	B6679	KIT – STUB GUARDS AND SM HOLD DOWNS 40 FT FD [30]		
	B6680	KIT – STUB GUARDS AND SM HOLD DOWNS 45 FT FD [30]		
1	118301	SICKLE GUARD – LH, OUTBOARD	1	
2	118345	SICKLE GUARD – W/ POINTS, W/O WEARBAR (3 PER END)	3	
3	118344	SICKLE GUARD – W/ POINTS [31]		
4	118162	CLIP – HOLD-DOWN [32]		
5	129297	WEARPLATE – UNDER CUTTERBAR, POLYETHYLENE [33]		
6	124338	SICKLE GUARD – CENTER, POINTED	1	
7	124344	GUIDE – TOP-CENTER	1	
8	34980	BAR – ADJUSTER	1	
9	220114	COVER – HINGE AND SPLIT	2	
10	151551	SHOE – SKID, TRANSITION PAN	4	
11	132906	BAR – FLEX	4	
12	140135	TOOL WELDT – GUARD STRAIGHTENING TOOL	1	
A	118193	NUT – FLANGE HEX .375 UNC		
B	118154	BOLT – HH 3/8 NC X 5/8 TFL GR 8 ZP		
C	120558	BOLT – RHSN SPECIAL 7/16 NC X 1.5 LG GR 5 ZP		
D	18654	NUT – HEX 7/16-14 UNC GR 5 ZP		
E	50120	BOLT – HH 3/8 NC X 1 STAIN STL		
F	132404	BOLT – RHSN SPECIAL 7/16 NC X 2.75 LG GR 5 ZP		
G	120639	BOLT – RHSN SPECIAL 7/16 NC X 1.75 LG GR 5 ZP		
H	21472	BOLT – RHSN 3/8 NC X 0.75 GR 5 ZP		
J	30228	NUT – FLANGE DT SMOOTH FACE 0.375-16 UNC		
K	101898	SCREW – HEX WASH HD THD ROLLING 3/8 NC X 5/8		
L	135315	SCREW – CSK FLAT SOCK HD, 7/16 X 1.25 LG GR 5 ZN		
M	20213	NUT – HEX LOCK DT 7/16-14 UNC ZN		

30. Stub Guards with Sheet Metal Hold-Downs kits are designed for use with 30–35 foot export flex headers and 40–45 foot export split frame flex headers. For service parts, refer to Section *60 (Option) Stub Guards with Sheet Metal Hold-Downs, page 167*. Kits available through Whole Goods only.
31. Complete cutterbar quantities: 40 ft. = 71, 45 ft. = 81.
32. Complete cutterbar quantities: 40 ft. = 38, 45 ft. = 42, 45 ft. split frame (export) = 43.
33. Complete cutterbar quantities: 40 ft. = 80, 45 ft. = 90.

9 Knife Components and Knifehead

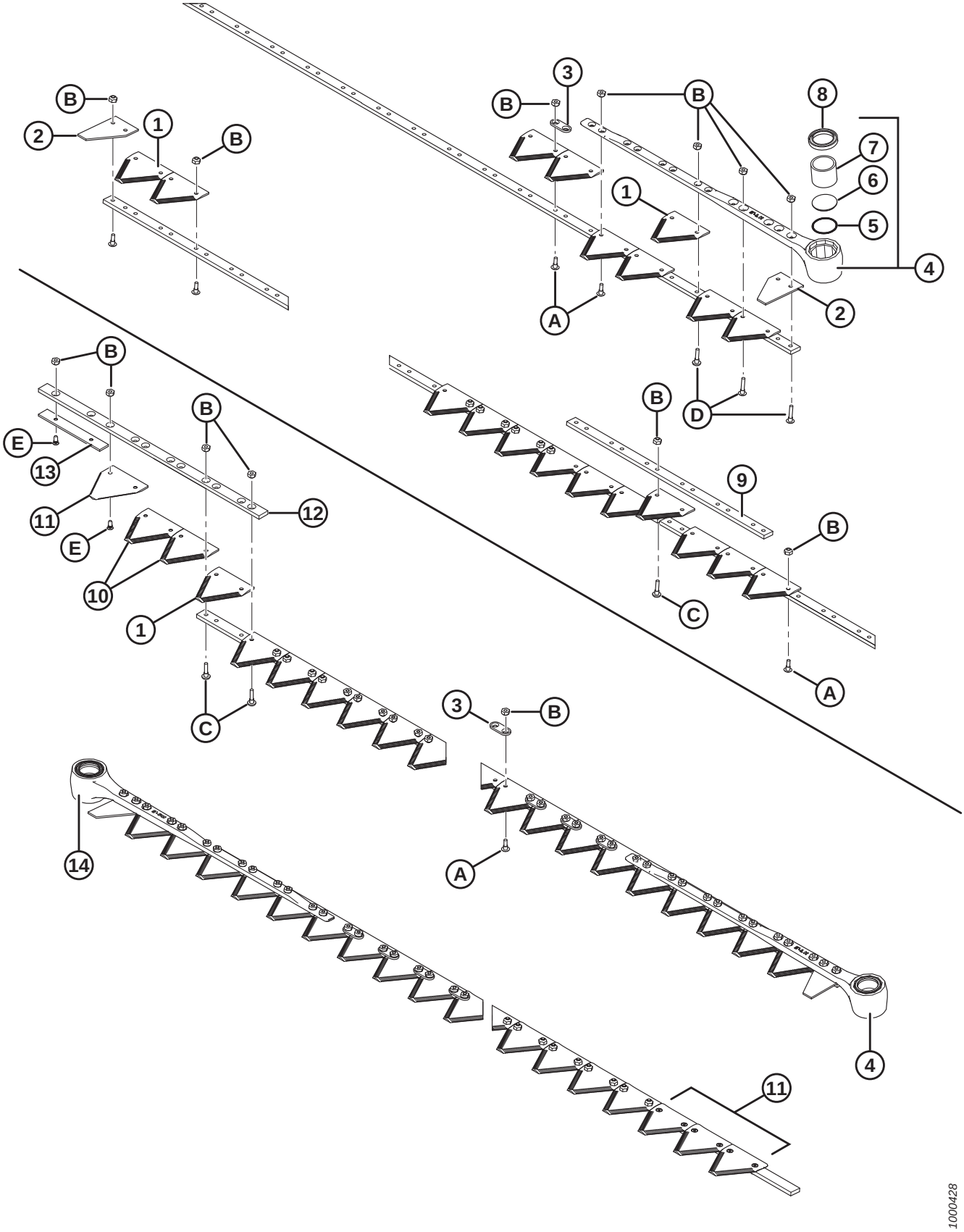

NOTE:

Top of illustration shows single knife; bottom shows double knife.

NOTE:

To service knife assemblies, refer to the following sections:

10 Segmented Knives – Single-Knife Headers, Fine-Tooth Sections, page 25
11 Segmented Knives – Single-Knife Headers, Coarse-Tooth Sections, page 27
12 Segmented Knives – Single-Knife Headers, Ultra Coarse-Tooth Sections, page 31
13 Segmented Knives – Double-Knife Headers, Fine-Tooth Sections, page 33
14 Segmented Knives – Double-Knife Headers, Coarse-Tooth Sections, page 37

15 Segmented Knives – Double-Knife Headers, Ultra Coarse-Tooth Sections, page 41

Ref	Part Number	Description	Qty	Serial Number
1	279641	COARSE SICKLE SECTION – 9 SPI (25 PACK) [34]		
	174845	COARSE SICKLE SECTION BUSATIS – 9 SPI (25 PACK)	OPT	
	294947	SECT PKG – ULTRA COARSE, 4 SPI (25 PACK)	OPT	
	279642	FINE SICKLE SECTION – 14 SPI (25 PACK)	OPT	
	118491	FINE SICKLE SECTION BUSATIS – 14 SPI (25 PACK)	OPT	
2	279468	SECTION – END, HALF SECTION (10 PACK)	2	
3	174857	BAR – REINFORCING (25 PACK) [35]		
4	132896	HEAD ASSEMBLY – LH, 5° ANGLE [36]	1	
5	115670	O-RING – SICKLE HEAD	1	
6	113937	PLUG – SICKLE HEAD	1	
7	100500	BEARING – NEEDLE, SICKLE HEAD	1	
8	113222	SEAL – SICKLE HEAD (INSTALL W/ LIP FACING OUTWARD)	1	
9	33955	BAR – SPLICE, 2-PIECE SICKLES (35 AND 40 FT SK)	1	
10	279310	COARSE SICKLE SECTION – BOTTOM CSK, 9 SPI (10 PACK)	2	
	279851	COARSE SICKLE SECTION BUSATIS – BOTTOM CSK, 9 SPI (10 PACK)	OPT	
	279312	FINE SICKLE SECTION – BOTTOM CSK, 14 SPI (10 PACK)	OPT	
	279850	FINE SICKLE SECTION BUSATIS – BOTTOM CSK, 14 SPI (10 PACK)	OPT	
	279996	KIT – CENTER OVERLAP FINE SICKLE [37]	OPT	
	279997	KIT – CENTER OVERLAP COARSE SICKLE [38]	OPT	
	335326	KIT – CENTER OVERLAP ULTRA COARSE SICKLE [39]	OPT	

34. Quantities (individual sections): 25 ft. = 99, 30 ft. single knife = 119, 35 ft. single knife = 139, 40 ft. single knife = 159, 40 ft. double knife = 153, 45 ft. double knife = 173.
35. Quantities (individual pieces): single knife (except 35 ft.) = 10, 35 ft. single knife = 20, double knife = 20.
36. Includes O-ring (MD #115670), plug (MD #113937), needle bearing (MD #100500), and seal (MD #113222).
37. Includes four top countersunk fine sickle sections (14 SPI), three bottom countersunk fine sickle sections (14 SPI), and all required hardware.
38. Includes four top countersunk coarse sickle sections (9 SPI), three bottom countersunk coarse sickle sections (9 SPI), and all required hardware.
39. Includes four top countersunk ultra coarse sickle sections (4 SPI), three bottom countersunk ultra coarse sickle sections (4 SPI), and all required hardware.

KNIFE COMPONENTS AND KNIFEHEAD

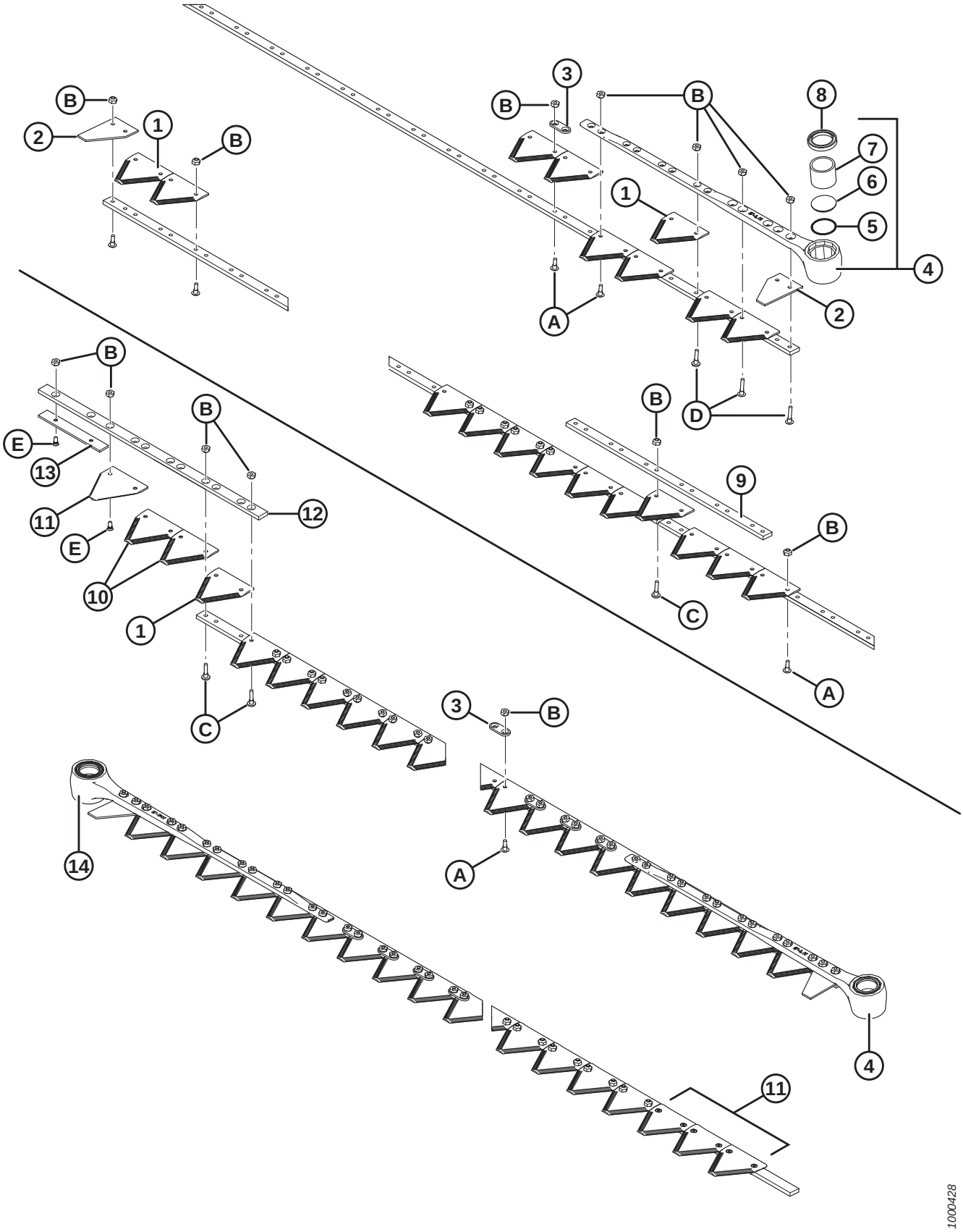

KNIFE COMPONENTS AND KNIFEHEAD

Ref	Part Number	Description	Qty	Serial Number
11	279314	COARSE SICKLE SECTION – TOP CSK, 9 SPI (10 PACK) [40]	4	
	279999	COARSE SICKLE SECTION BUSATIS – TOP CSK, 9 SPI (10 PACK)	OPT	
	279316	FINE SICKLE SECTION – TOP CSK, 14 SPI (10 PACK)	OPT	
	279848	FINE SICKLE SECTION BUSATIS – TOP CSK, 14 SPI (10 PACK)	OPT	
12	124880	GUIDE – TOP, LH SICKLE	1	
13	124881	BAR – WEAR, LH SICKLE	1	
14	132897	HEAD ASS'Y – RH, 5° ANGLE [41]	1	
A	135628	SCREW – BHRN, #12-24 NC X 0.67 IN. (50 PACK) [42]		
B	135626	NUT – CSK, CENTER LOCK, #12-24 NC (50 PACK) [43]		
C	135630	SCREW – BHRN, #12-24 NC X 0.920 IN. (50 PACK) [44]		
D	135632	SCREW – BHRN, #12-24 NC X 1.05 IN. (50 PACK) [45]		
E	174165	SCREW – 90° CSK SK HD, #12-24 NC X 0.5 IN. (50 PACK)		

40. Install with serrations down.
41. Includes O-ring (MD #115670), plug (MD #113937), needle bearing (MD #100500), and seal (MD #113222).
42. Package of 1000 – MD #135629.
43. Package of 2000 – MD #135627.
44. Package of 1000 – MD #135631.
45. Package of 1000 – MD #135633.

10 Segmented Knives – Single-Knife Headers, Fine-Tooth Sections

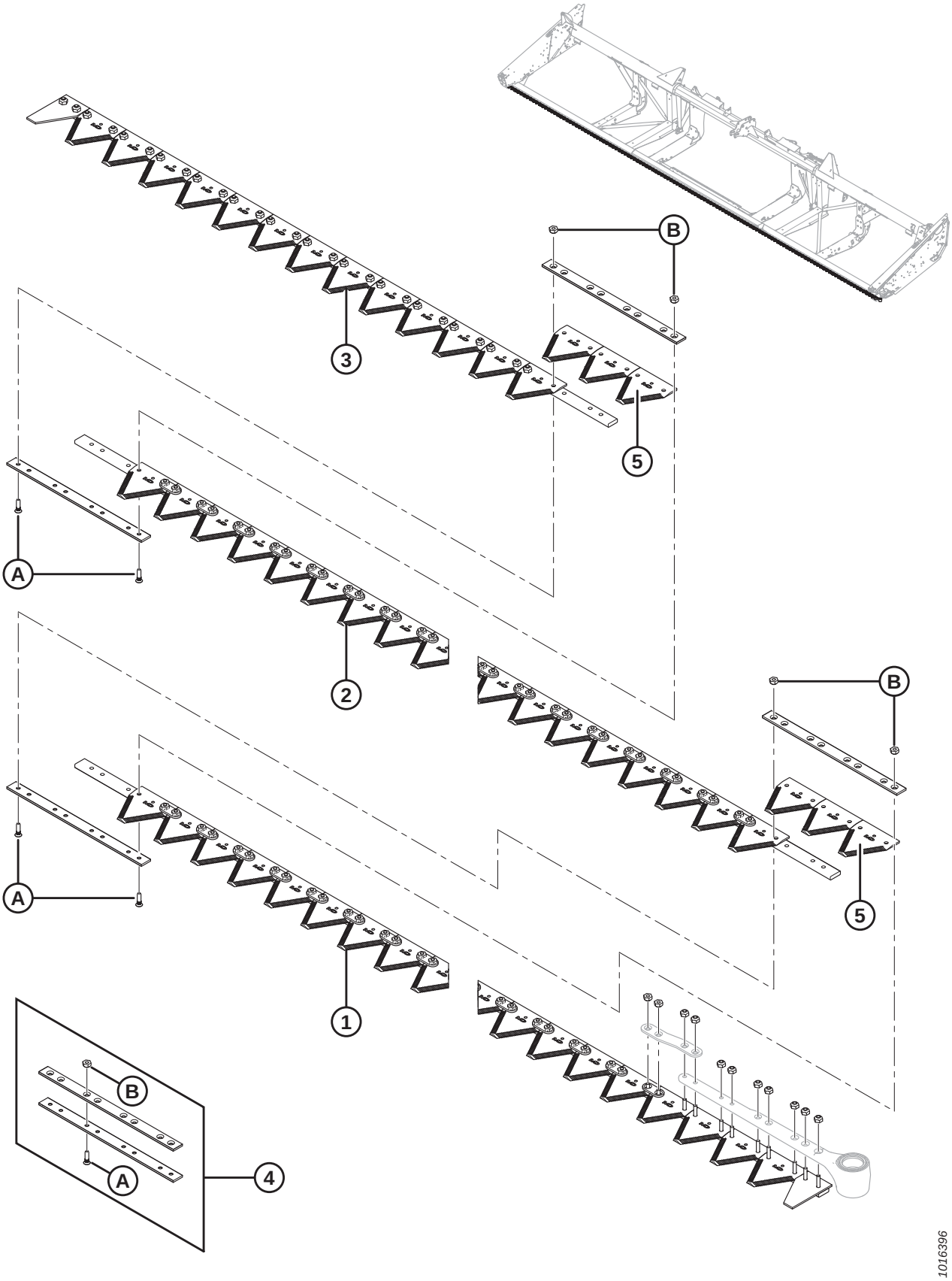

NOTE:

7.6–13.7 m (25–45 ft.) header knives are sold in segments; for a complete segment (less knifehead), refer to tables below:

Ref	Part Number	Description	Qty	Serial Number
		7.6 METER (25 FOOT)		
	335489	**KIT – 25 FT FINE SINGLE KNIFE** [46]		
1	279398	LEFT HEAD SEGMENT	1	
2	279399	CENTER SEGMENT	1	
3	279401	RIGHT, TAIL SEGMENT	1	
4	129043	MACDON SPLICE KIT [47]	2	
5	279642	SECTION – KONDEX FINE, 9 SPI (25 PACK)	6	
	118491	SECTION – BUSATIS FINE, 9 SPI (25 PACK)	6	
		9.1 METER (30 FOOT)		
	335490	**KIT – 30 FT FINE SINGLE KNIFE** [46]		
1	279398	LEFT HEAD SEGMENT	1	
2	279399	CENTER SEGMENT	2	
3	279402	RIGHT, TAIL SEGMENT	1	
4	129043	MACDON SPLICE KIT [47]	3	
5	279642	SECTION – KONDEX FINE, 9 SPI (25 PACK)	9	
	118491	SECTION – BUSATIS FINE, 9 SPI (25 PACK)	9	
		10.7 METER (35 FOOT)		
	335491	**KIT – 35 FT FINE SINGLE KNIFE** [46]		
1	279398	LEFT HEAD SEGMENT	1	
2	279399	CENTER SEGMENT	2	
3	279403	RIGHT, TAIL SEGMENT	1	
4	129043	MACDON SPLICE KIT [47]	3	
5	279642	SECTION – KONDEX FINE, 9 SPI (25 PACK)	9	
	118491	SECTION – BUSATIS FINE, 9 SPI (25 PACK)	9	
		12.2 METER (40 FOOT)		
	335492	**KIT – 40 FT FINE SINGLE KNIFE** [46]		
1	279398	LEFT HEAD SEGMENT	1	
2	279399	CENTER SEGMENT	3	
3	279404	RIGHT, TAIL SEGMENT	1	
4	129043	MACDON SPLICE KIT [47]	4	
5	279642	SECTION – KONDEX FINE, 9 SPI (25 PACK)	12	
	118491	SECTION – BUSATIS FINE, 9 SPI (25 PACK)	12	
A	129299	SCREW – 90° CSK SKT HD, #12-24 NC X 0.812 IN.		
B	135626	NUT – CSK, CENTER LOCK, #12-24 NC (50 PACK)		

46. Complete knife assembly kit.
47. Includes two splice bars and hardware.

11 Segmented Knives – Single-Knife Headers, Coarse-Tooth Sections

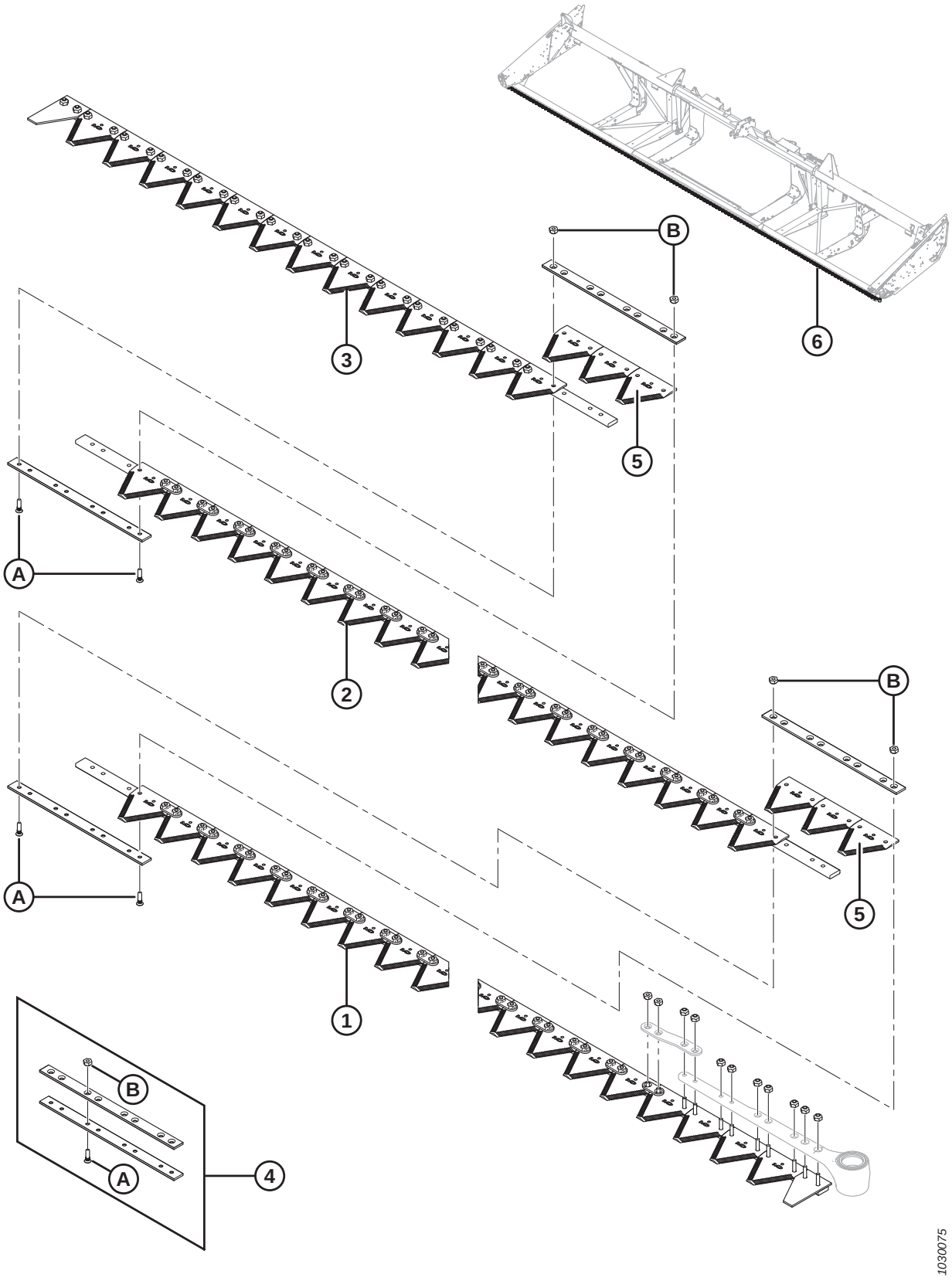

NOTE:

7.6–13.7 m (25–45 ft.) header knives are sold in segments; for a complete segment (less knifehead), refer to tables below:

Ref	Part Number	Description	Qty	Serial Number
		7.6 METER (25 FOOT)		
1	279405	LEFT HEAD SEGMENT	1	
2	279406	CENTER SEGMENT	1	
3	279408	RIGHT, TAIL SEGMENT	1	
4	129043	MACDON SPLICE KIT [48]	2	
5	279641	SECTION – KONDEX COARSE, 9 SPI (25 PACK)	6	
	174845	SECTION – BUSATIS COARSE, 9 SPI (25 PACK)	6	
		9.1 METER (30 FOOT)		
1	279405	LEFT HEAD SEGMENT	1	
2	279406	CENTER SEGMENT	2	
3	279409	RIGHT, TAIL SEGMENT	1	
4	129043	MACDON SPLICE KIT [48]	3	
5	279641	SECTION – KONDEX COARSE, 9 SPI (25 PACK)	9	
	174845	SECTION – BUSATIS COARSE, 9 SPI (25 PACK)	9	
6	294795	KIT – 30 FT SINGLE KNIFE [49]	A/R	
		10.7 METER (35 FOOT)		
1	279405	LEFT HEAD SEGMENT	1	
2	279406	CENTER SEGMENT	2	
3	279410	RIGHT, TAIL SEGMENT	1	
4	129043	MACDON SPLICE KIT [48]	3	
5	279641	SECTION – KONDEX COARSE, 9 SPI (25 PACK)	9	
	174845	SECTION – BUSATIS COARSE, 9 SPI (25 PACK)	9	
6	294796	KIT – 35 FT SINGLE KNIFE [50]	A/R	

48. Includes two splice bars and hardware.
49. Kit is for complete cutterbar replacement. Kit includes left head segment (MD #279405), center segment (MD #279406), right tail segment (MD #279409), MacDon splice kit (MD #129043), and Kondex coarse section (MD #279641).
50. Kit is for complete cutterbar replacement. Kit includes left head segment (MD #279405), center segment (MD #279406), right tail segment (MD #279410), MacDon splice kit (MD #129043), and Kondex coarse section (MD #279641).

SEGMENTED KNIVES – SINGLE-KNIFE HEADERS, COARSE-TOOTH SECTIONS

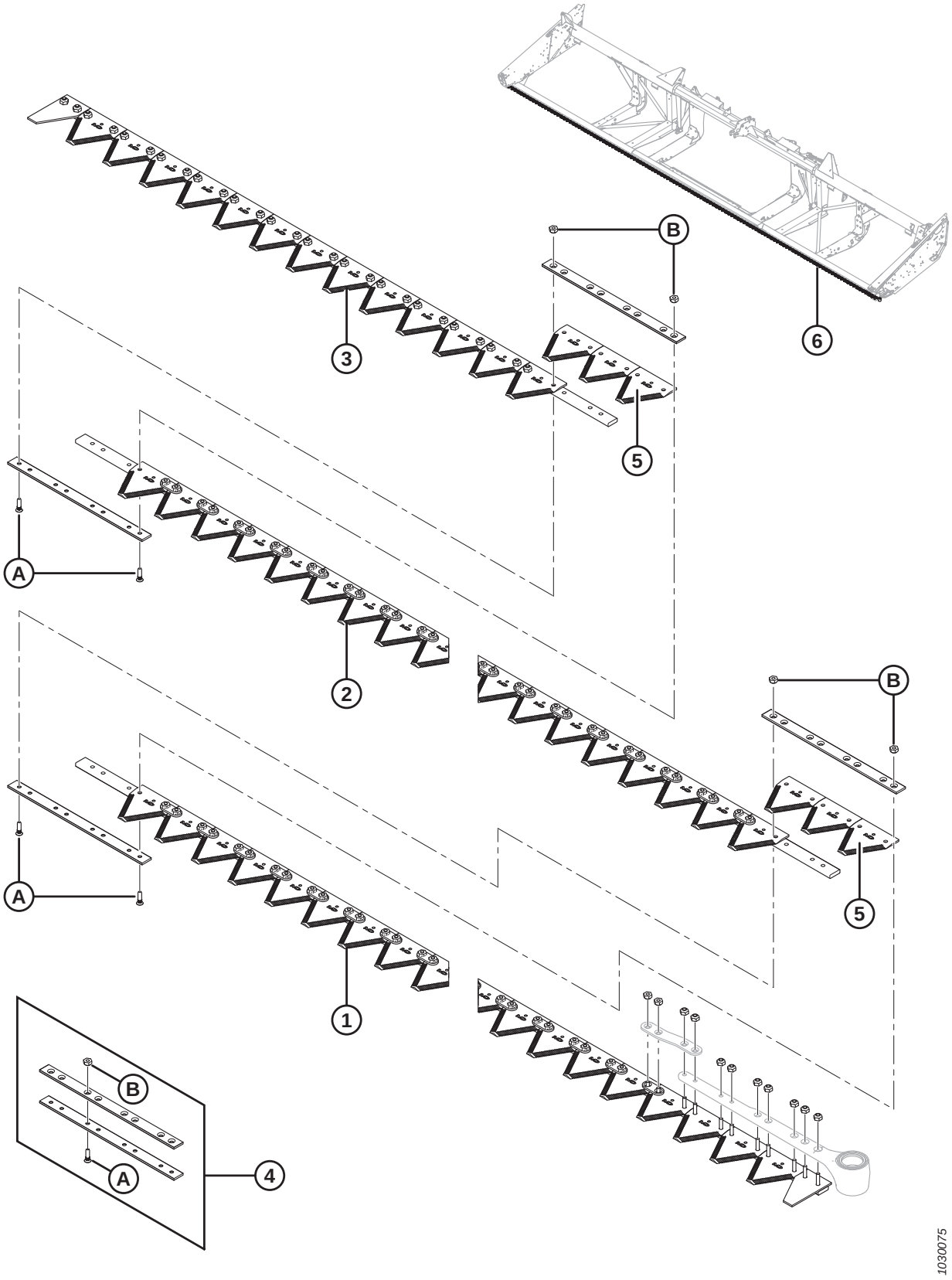

Ref	Part Number	Description	Qty	Serial Number
		12.2 METER (40 FOOT)		
1	279405	LEFT HEAD SEGMENT	1	
2	279406	CENTER SEGMENT	3	
3	279411	RIGHT, TAIL SEGMENT	1	
4	129043	MACDON SPLICE KIT [48]	4	
5	279641	SECTION – KONDEX COARSE, 9 SPI (25 PACK)	12	
	174845	SECTION – BUSATIS COARSE, 9 SPI (25 PACK)	12	
6	294797	KIT – 40 FT SINGLE KNIFE [51]	A/R	
A	129299	SCREW – 90° CSK SKT HD, #12-24 NC X 0.812 IN.		
B	135626	NUT – CSK, CENTER LOCK, #12-24 NC (50 PACK)		

51. Kit is for complete cutterbar replacement. Kit includes left head segment (MD #279405), center segment (MD #279406), right tail segment (MD #279411), MacDon splice kit (MD #129043), and Kondex coarse section (MD #279641).

12 Segmented Knives – Single-Knife Headers, Ultra Coarse-Tooth Sections

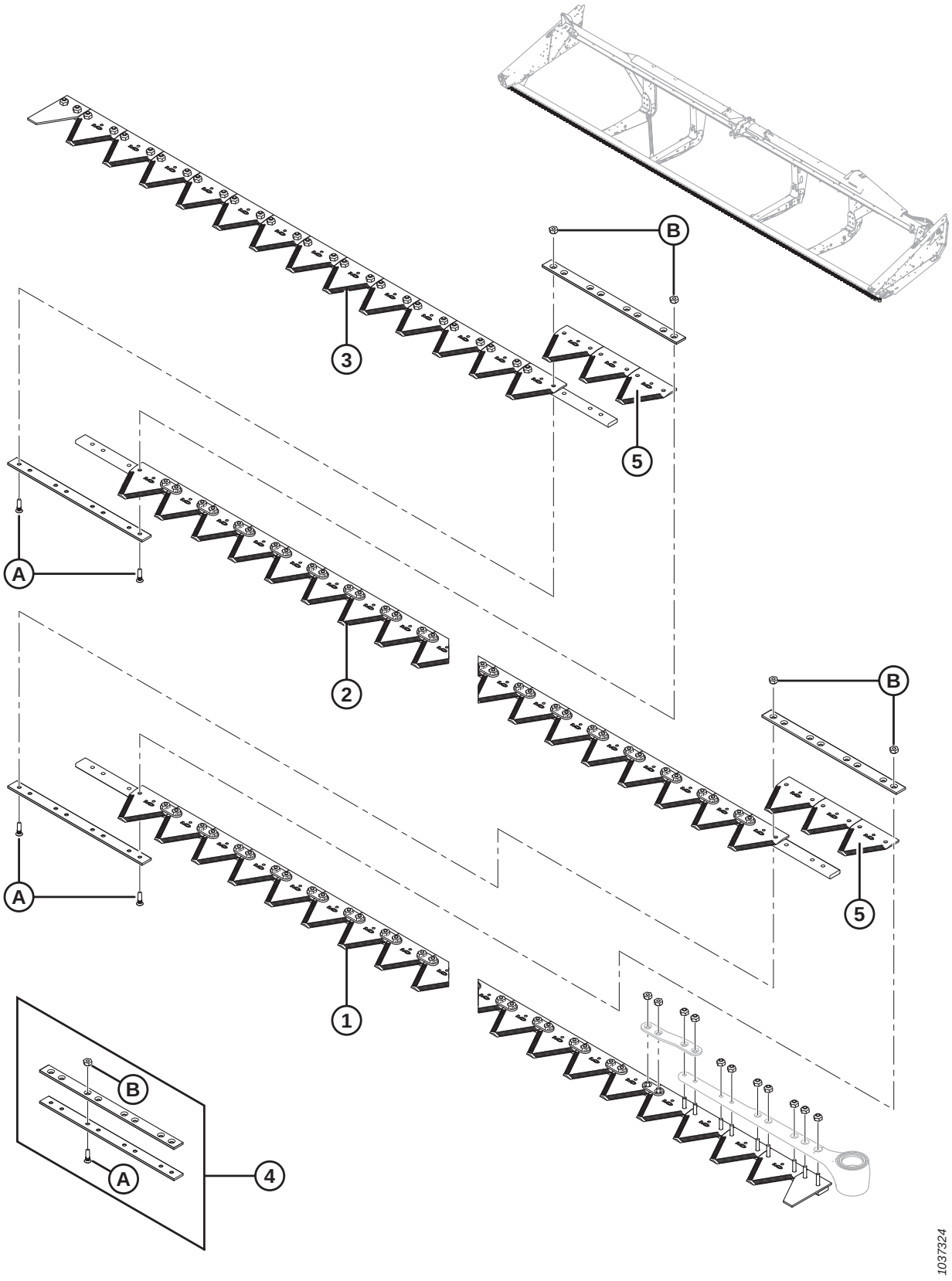

SEGMENTED KNIVES – SINGLE-KNIFE HEADERS, ULTRA COARSE-TOOTH SECTIONS

Ref	Part Number	Description	Qty	Serial Number
		7.6 METER (25 FOOT)		
	335513	**KIT – 25 FT ULTRA COARSE SINGLE KNIFE** [52]		
1	**335533**	**ASSEMBLY – KNIFE SEGMENT ULTRA COARSE** [53]	**1**	
2	**335534**	**ASSEMBLY – KNIFE SEGMENT ULTRA COARSE** [53]	**1**	
3	**335535**	**ASSEMBLY – KNIFE SEGMENT ULTRA COARSE** [53]	**1**	
4	**129043**	**SPLICE KIT** [54]	**2**	
5	**294947**	**SECTION – PACKAGE ULTRA COARSE, 4 SPI**	**1**	
		9.1 METER (30 FOOT)		
	335514	**KIT – 30 FT ULTRA COARSE SINGLE KNIFE** [52]		
1	**335533**	**ASSEMBLY – KNIFE SEGMENT ULTRA COARSE** [53]	**1**	
2	**335534**	**ASSEMBLY – KNIFE SEGMENT ULTRA COARSE** [53]	**2**	
3	**335536**	**ASSEMBLY – KNIFE SEGMENT 4 SPI** [53]	**1**	
4	**129043**	**SPLICE KIT 2 1/8 IN.** [54]	**3**	
5	**294947**	**SECTION – PACKAGE ULTRA COARSE, 4 SPI**	**1**	
		10.7 METER (35 FOOT)		
	335515	**KIT – 35 FT ULTRA COARSE SINGLE KNIFE** [52]		
1	**335533**	**ASSEMBLY – KNIFE SEGMENT ULTRA COARSE** [53]	**1**	
2	**335534**	**ASSEMBLY – KNIFE SEGMENT ULTRA COARSE** [53]	**2**	
3	**335531**	**KNIFE SEGMENT, TAIL**	**1**	
4	**129043**	**SPLICE KIT 2 1/8 IN.** [54]	**3**	
5	**294947**	**SECTION – PACKAGE ULTRA COARSE, 4 SPI**	**1**	
		12.2 METER (40 FOOT)		
	335516	**KIT – 40 FT ULTRA COARSE SINGLE KNIFE** [52]		
1	**335533**	**ASSEMBLY – KNIFE SEGMENT ULTRA COARSE** [53]	**1**	
2	**335534**	**ASSEMBLY – KNIFE SEGMENT ULTRA COARSE** [53]	**3**	
3	**335530**	**KNIFE SEGMENT, TAIL**	**1**	
4	**129043**	**SPLICE KIT 2 1/8 IN.** [54]	**4**	
5	**294947**	**SECTION – PACKAGE ULTRA COARSE, 4 SPI**	**1**	
A	**129299**	**SCREW – 90º CSK SKT HD, #12-24 NC X 0.812 IN.**		
B	**135626**	**NUT – CSK, CENTER LOCK, #12-24 NC (50 PACK)**		

52. Complete knife assembly kit.
53. Includes hardware.
54. Includes two splice bars and hardware.

13 Segmented Knives – Double-Knife Headers, Fine-Tooth Sections

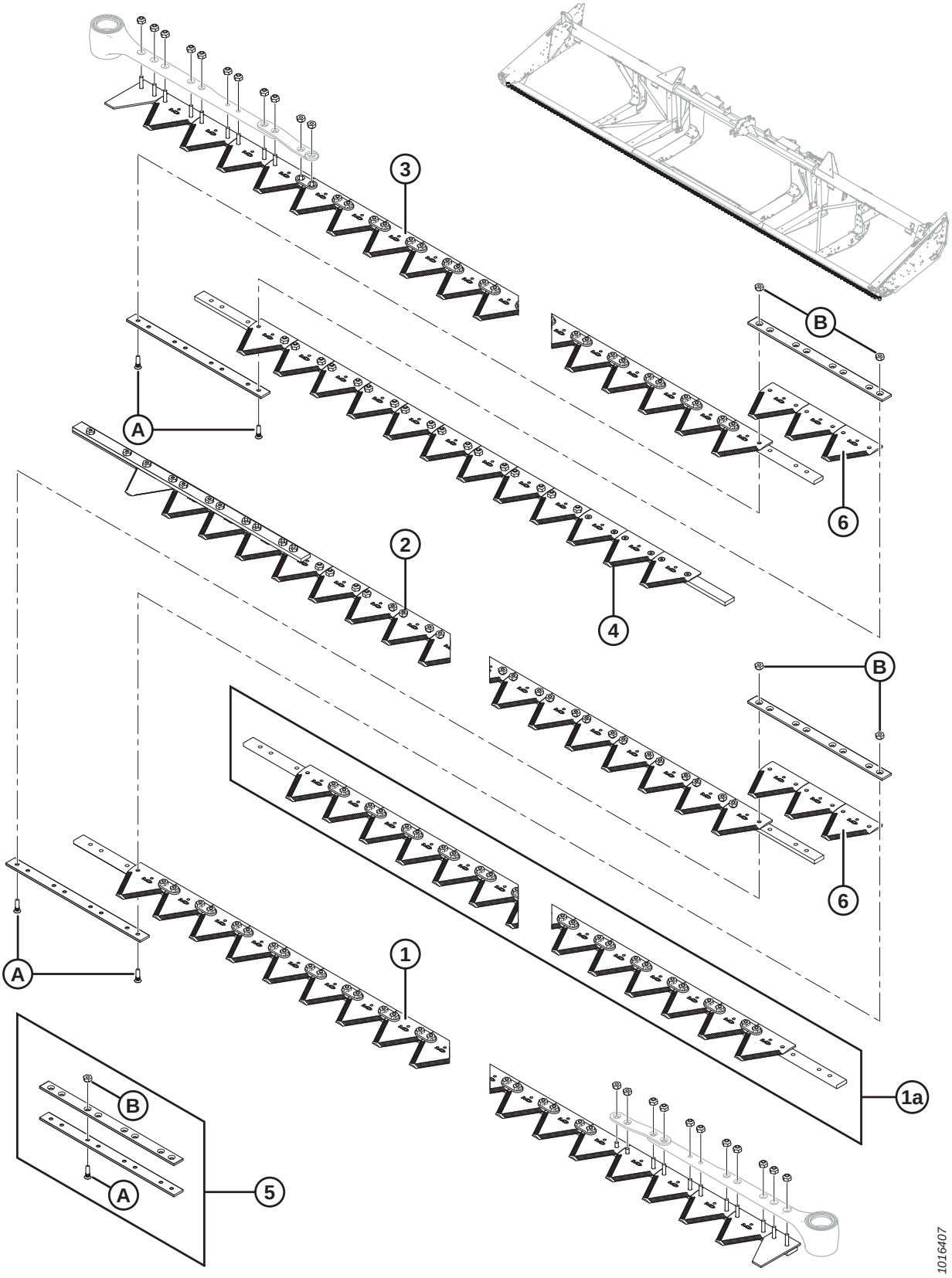

NOTE:

9.1–13.7 m (30–45 ft.) header knives are sold in segments; for a complete segment (less knifehead), refer to tables below:

Ref	Part Number	Description	Qty	Serial Number
		9.1 METER (30 FOOT)		
	335484	**KIT – 30 FT FINE DOUBLE KNIFE** [55]		
1	279398	LEFT HEAD SEGMENT	1	
2	279417	LEFT TAIL SEGMENT	1	
3	279412	RIGHT HEAD SEGMENT	1	
4	279418	RIGHT, TAIL SEGMENT	1	
5	129043	MACDON SPLICE KIT [56]	2	
6	279642	SECTION – KONDEX FINE, 9 SPI (25 PACK)	6	
	118491	SECTION – BUSATIS FINE, 9 SPI (25 PACK)	6	
		10.7 METER (35 FOOT)		
	335485	**KIT – 35 FT FINE DOUBLE KNIFE** [55]		
1	279398	LEFT HEAD SEGMENT	1	
2	279419	LEFT TAIL SEGMENT	1	
3	279412	RIGHT HEAD SEGMENT	1	
4	279420	RIGHT, TAIL SEGMENT	1	
5	129043	MACDON SPLICE KIT [56]	2	
6	279642	SECTION – KONDEX FINE, 9 SPI (25 PACK)	6	
	118491	SECTION – BUSATIS FINE, 9 SPI (25 PACK)	6	
		12.2 METER (40 FOOT)		
	335486	**KIT – 40 FT FINE DOUBLE KNIFE** [55]		
1	279398	LEFT HEAD SEGMENT	1	
1a	279399	CENTER SEGMENT (1 PER SIDE)	2	
2	279421	LEFT TAIL SEGMENT	1	
3	279412	RIGHT HEAD SEGMENT	1	
4	279422	RIGHT, TAIL SEGMENT	1	
5	129043	MACDON SPLICE KIT [56]	4	
6	279642	SECTION – KONDEX FINE, 9 SPI (25 PACK)	12	
	118491	SECTION – BUSATIS FINE, 9 SPI (25 PACK)	12	
		13.7 METER (45 FOOT)		
	335487	**KIT – 45FT FINE DOUBLE KNIFE** [55]		
1	279398	LEFT HEAD SEGMENT	1	
1a	279399	CENTER SEGMENT (1 PER SIDE)	2	
2	279423	LEFT TAIL SEGMENT	1	
3	279412	RIGHT HEAD SEGMENT	1	
4	279424	RIGHT, TAIL SEGMENT	1	
5	129043	MACDON SPLICE KIT [56]	4	
6	279642	SECTION – KONDEX FINE, 9 SPI (25 PACK)	12	
	118491	SECTION – BUSATIS FINE, 9 SPI (25 PACK)	12	

55. Complete knife assembly kit.
56. Includes two splice bars and hardware.

SEGMENTED KNIVES – DOUBLE-KNIFE HEADERS, FINE-TOOTH SECTIONS

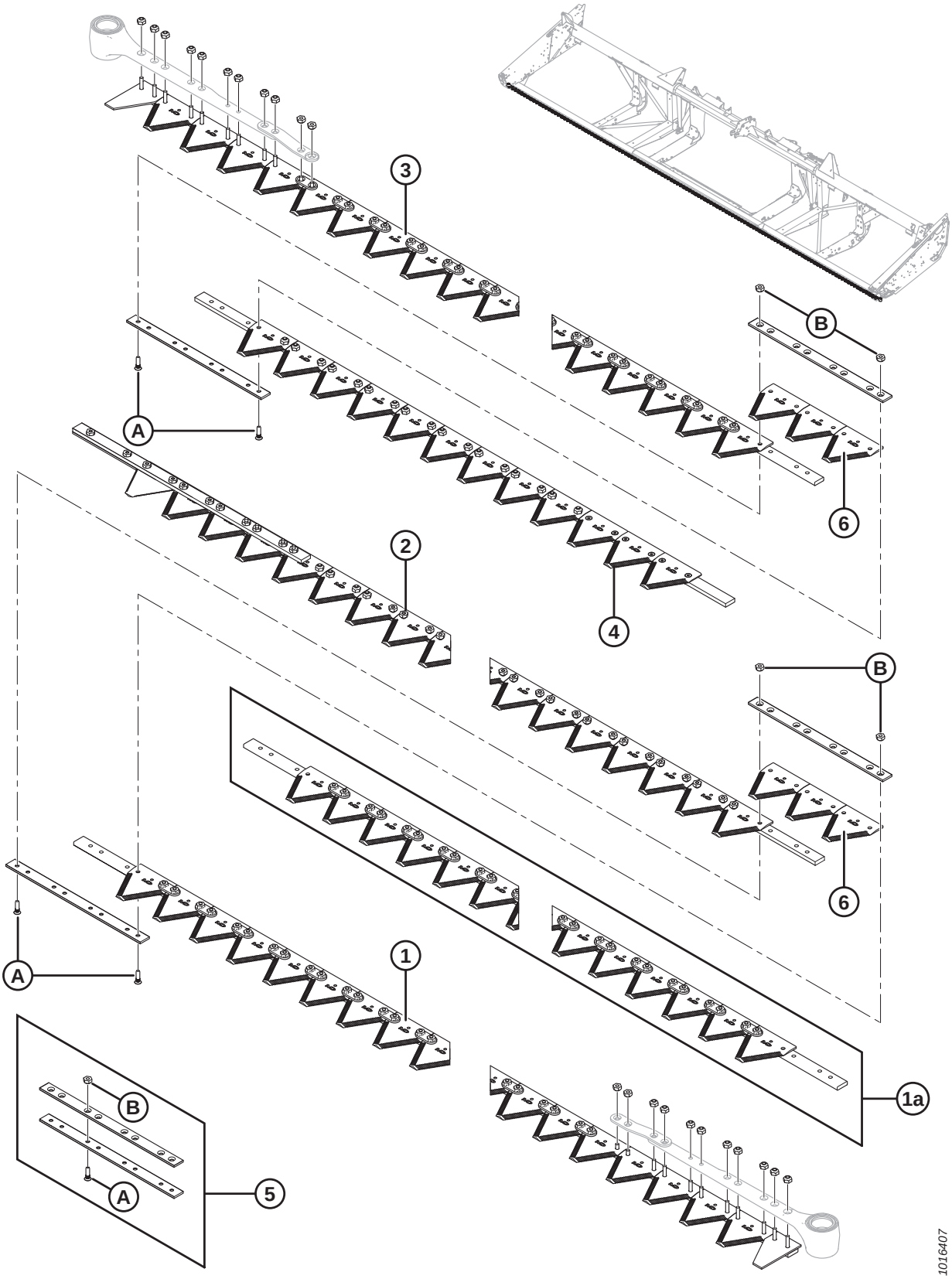

SEGMENTED KNIVES – DOUBLE-KNIFE HEADERS, FINE-TOOTH SECTIONS

Ref	Part Number	Description	Qty	Serial Number
A	129299	SCREW – 90° CSK SKT HD, #12-24 NC X 0.812 IN.		
B	135626	NUT – CSK, CENTER LOCK, #12-24 NC (50 PACK)		

14 Segmented Knives – Double-Knife Headers, Coarse-Tooth Sections

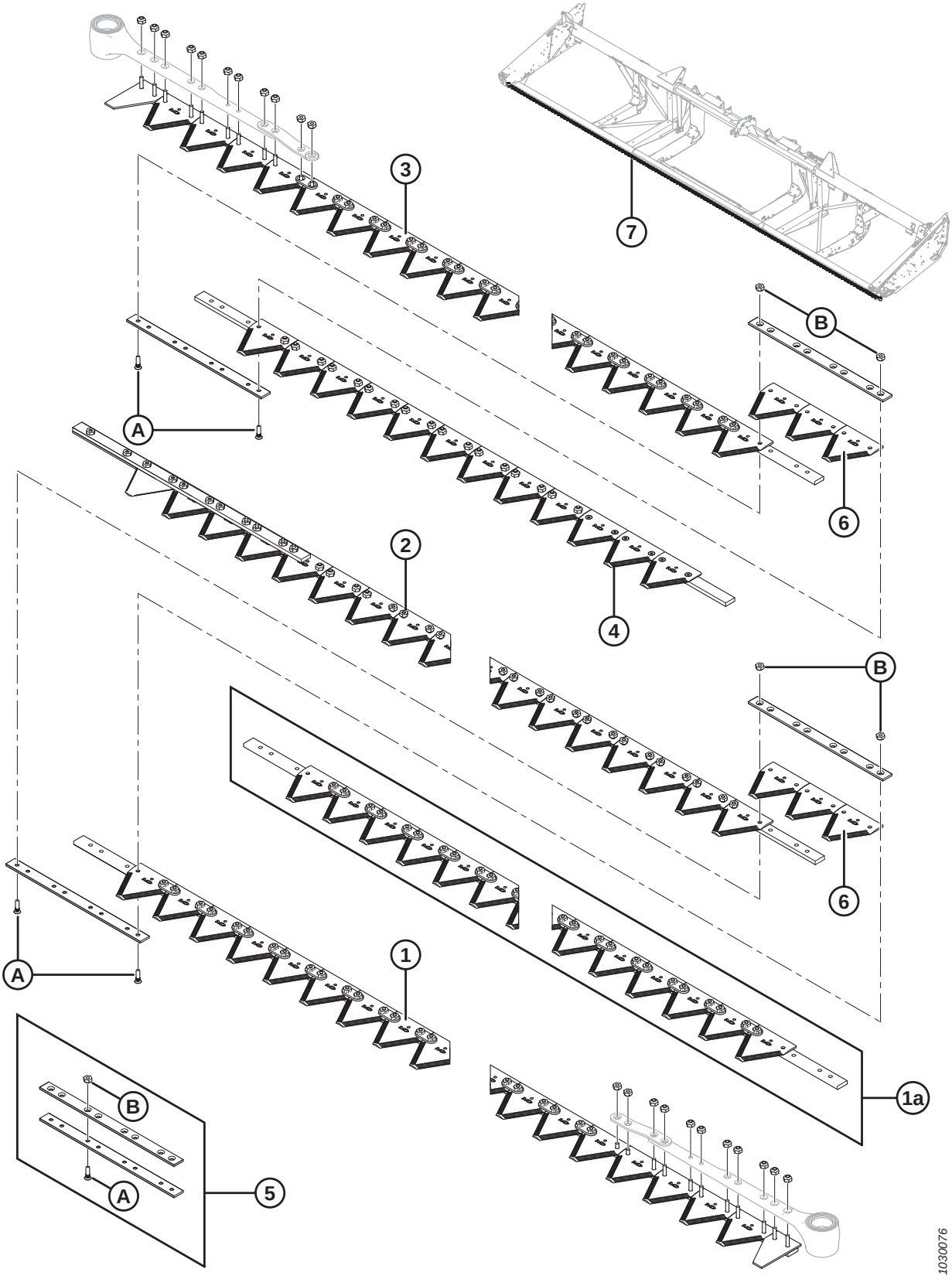

NOTE:

9.1–13.7 m (30–45 ft.) header knives are sold in segments; for a complete segment (less knifehead), refer to tables below:

Ref	Part Number	Description	Qty	Serial Number
		9.1 METER (30 FOOT)		
1	279405	LEFT HEAD SEGMENT	1	
2	279430	LEFT TAIL SEGMENT	1	
3	279428	RIGHT HEAD SEGMENT [57]	1	
4	279432	RIGHT, TAIL SEGMENT	1	
5	129043	MACDON SPLICE KIT [58]	2	
6	279641	SECTION – KONDEX COARSE, 9 SPI (25 PACK)	6	
	174845	SECTION – BUSATIS COARSE, 9 SPI (25 PACK)	6	
7	294791	KIT – 30 FT DOUBLE KNIFE [59]	A/R	
		10.7 METER (35 FOOT)		
1	279405	LEFT HEAD SEGMENT	1	
2	279431	LEFT TAIL SEGMENT	1	
3	279428	RIGHT HEAD SEGMENT [57]	1	
4	279433	RIGHT, TAIL SEGMENT	1	
5	129043	MACDON SPLICE KIT [58]	2	
6	279641	SECTION – KONDEX COARSE, 9 SPI (25 PACK)	6	
	174845	SECTION – BUSATIS COARSE, 9 SPI (25 PACK)	6	
7	294792	KIT – 35 FT DOUBLE KNIFE [60]	A/R	
		12.2 METER (40 FOOT)		
1	279405	LEFT HEAD SEGMENT	1	
1a	279406	CENTER SEGMENT (1 PER SIDE)	2	
2	279434	LEFT TAIL SEGMENT	1	
3	279428	RIGHT HEAD SEGMENT [57]	1	
4	279435	RIGHT, TAIL SEGMENT	1	
5	129043	MACDON SPLICE KIT [58]	4	
6	279641	SECTION – KONDEX COARSE, 9 SPI (25 PACK)	12	
	174845	SECTION – BUSATIS COARSE, 9 SPI (25 PACK)	12	
7	294793	KIT – 40 FT DOUBLE KNIFE [61]	A/R	

57. Right head segment (MD #279428) is one hole shorter on the outboard end than the factory-equipped knife.
58. Includes two splice bars and hardware.
59. Kit is for complete cutterbar replacement. Kit includes left head segment (MD #279405), left tail segment (MD #279430), right head segment (MD #279428), right tail segment (MD #279432), MacDon splice kit (MD #129043), and Kondex coarse section (MD #279641).
60. Kit is for complete cutterbar replacement. Kit includes left head segment (MD #279405), left tail segment (MD #279431), right head segment (MD #279428), right tail segment (MD #279433), MacDon splice kit (MD #129043), and Kondex coarse section (MD #279641).
61. Kit is for complete cutterbar replacement. Kit includes left head segment (MD #279405), center segment (MD #279406), left tail segment (MD #279434), right head segment (MD #279428), right tail segment (MD #279435), MacDon splice kit (MD #129043), and Kondex coarse section (MD #279641).

SEGMENTED KNIVES – DOUBLE-KNIFE HEADERS, COARSE-TOOTH SECTIONS

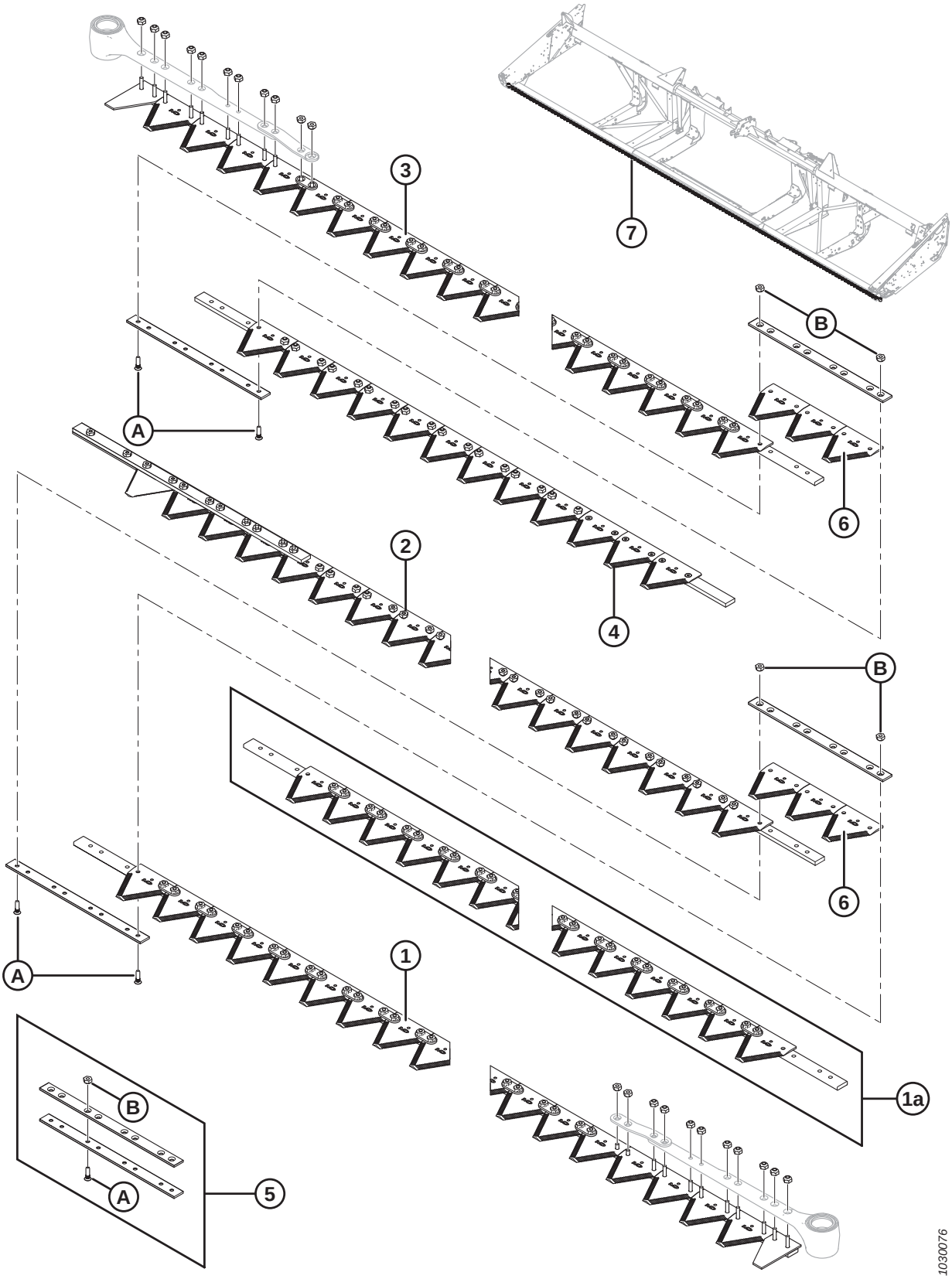

SEGMENTED KNIVES – DOUBLE-KNIFE HEADERS, COARSE-TOOTH SECTIONS

Ref	Part Number	Description	Qty	Serial Number
		13.7 METER (45 FOOT)		
1	279405	LEFT HEAD SEGMENT	1	
1a	279406	CENTER SEGMENT (1 PER SIDE)	2	
2	279436	LEFT TAIL SEGMENT	1	
3	279428	RIGHT HEAD SEGMENT [57]	1	
4	279437	RIGHT, TAIL SEGMENT	1	
5	129043	MACDON SPLICE KIT [58]	4	
6	279641	SECTION – KONDEX COARSE, 9 SPI (25 PACK)	12	
	174845	SECTION – BUSATIS COARSE, 9 SPI (25 PACK)	12	
7	294794	KIT – 45 FT DOUBLE KNIFE [62]	A/R	
A	129299	SCREW – 90° CSK SKT HD, #12-24 NC X 0.812 IN.		
B	135626	NUT – CSK, CENTER LOCK, #12-24 NC (50 PACK)		

62. Kit is for complete cutterbar replacement. Kit includes left head segment (MD #279405), center segment (MD #279406), left tail segment (MD #279436), right head segment (MD #279428), right tail segment (MD #279437), MacDon splice kit (MD #129043), and Kondex coarse section (MD #279641).

15 Segmented Knives – Double-Knife Headers, Ultra Coarse-Tooth Sections

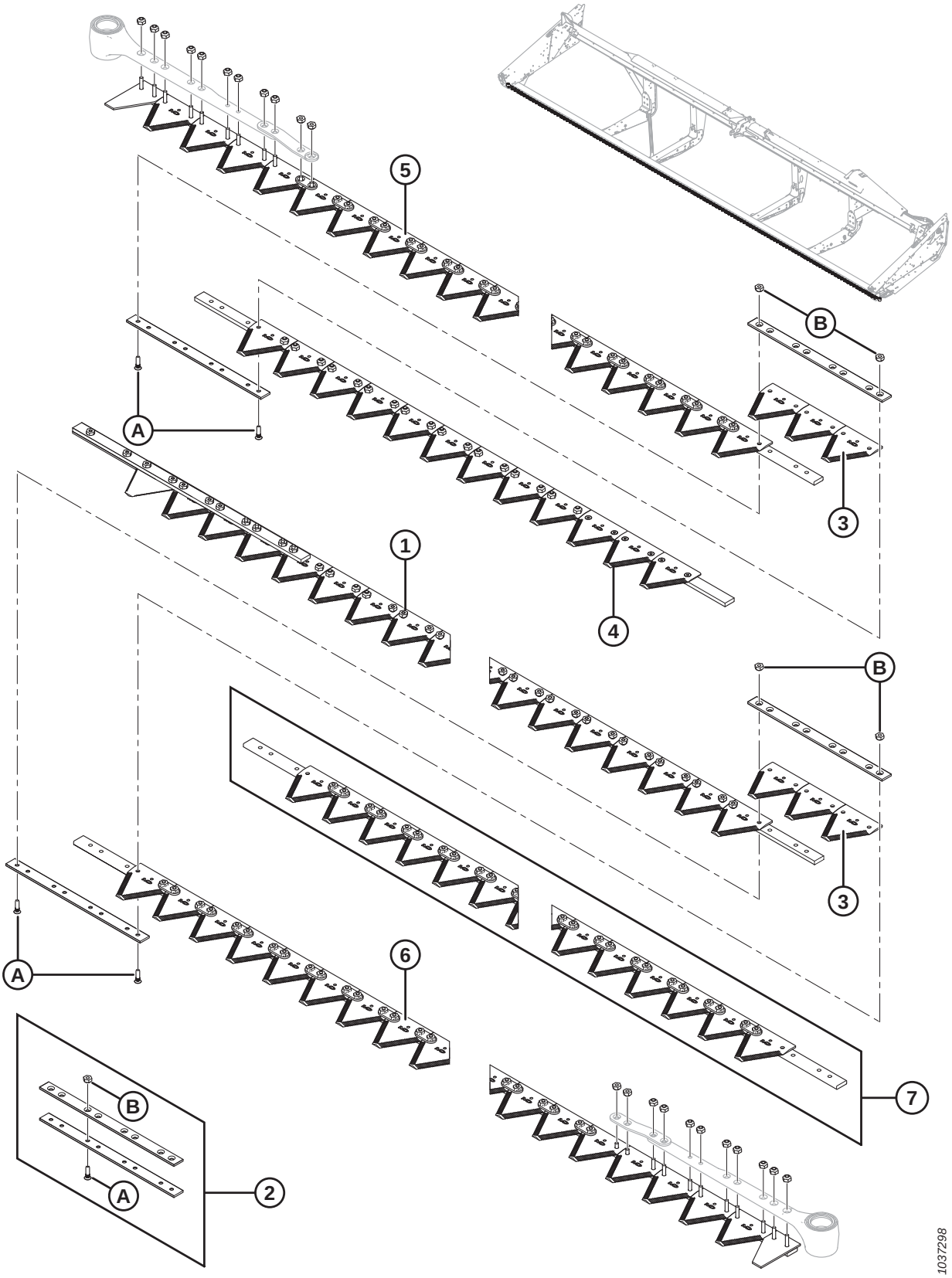

Ref	Part Number	Description	Qty	Serial Number
		9.1 METER (30 FOOT)		
	335509	KIT – 30 FT ULTRA COARSE DOUBLE KNIFE [63]		
1	335526	LEFT TAIL SEGMENT	1	
2	129043	SPLICE KIT 2 1/8 IN. [64]	2	
3	294947	SECTION – PACKAGE ULTRA COARSE, 4 SPI	1	
4	335522	RIGHT, TAIL SEGMENT		
5	335532	ASSEMBLY KNIFE SEG ULTRA COARSE [65]	1	
6	335533	ASSEMBLY KNIFE SEG ULTRA COARSE [65]	1	
		10.7 METER (35 FOOT)		
	335510	KIT – 35 FT ULTRA COARSE DOUBLE KNIFE [63]		
1	335529	LEFT TAIL SEGMENT	1	
2	129043	SPLICE KIT 2 1/8 IN. [64]	2	
3	294947	SECTION – PACKAGE ULTRA COARSE, 4 SPI	1	
4	335523	RIGHT, TAIL SEGMENT	1	
5	335532	ASSEMBLY KNIFE SEG ULTRA COARSE [65]	1	
6	335533	ASSEMBLY KNIFE SEG ULTRA COARSE [65]	1	
		12.2 METER (40 FOOT)		
	335511	KIT – 40 FT ULTRA COARSE DOUBLE KNIFE [63]		
1	335527	LEFT, TAIL SEGMENT	1	
2	129043	SPLICE KIT 2 1/8 IN. [64]	4	
3	294947	SECTION – PACKAGE ULTRA COARSE, 4 SPI	1	
4	335519	RIGHT, TAIL SEGMENT	1	
5	335532	ASSEMBLY KNIFE SEG ULTRA COARSE [65]	1	
6	335533	ASSEMBLY KNIFE SEG ULTRA COARSE [65]	1	
7	335534	ASSEMBLY KNIFE SEG ULTRA COARSE [65]	2	
		13.7 METER (45 FOOT)		
	335512	KIT – 45 FT ULTRA COARSE DOUBLE KNIFE [63]		
1	335528	LEFT, TAIL SEGMENT	1	
2	129043	SPLICE KIT 2 1/8 IN. [64]	2	
3	294947	SECTION – PACKAGE ULTRA COARSE, 4 SPI	1	
4	335521	RIGHT, TAIL SEGMENT	1	
5	335532	ASSEMBLY KNIFE SEG ULTRA COARSE [65]	1	
6	335533	ASSEMBLY KNIFE SEG ULTRA COARSE [65]	1	
7	335534	ASSEMBLY KNIFE SEG ULTRA COARSE [65]	2	
A	129299	SCREW – 90º CSK SKT HD, #12-24 NC X 0.812 IN.		
B	135626	NUT – CSK, CENTER LOCK, #12-24 NC (50 PACK)		

63. Complete knife assembly kit.
64. Includes two splice bars and hardware.
65. Includes hardware.

16 Knife Drive

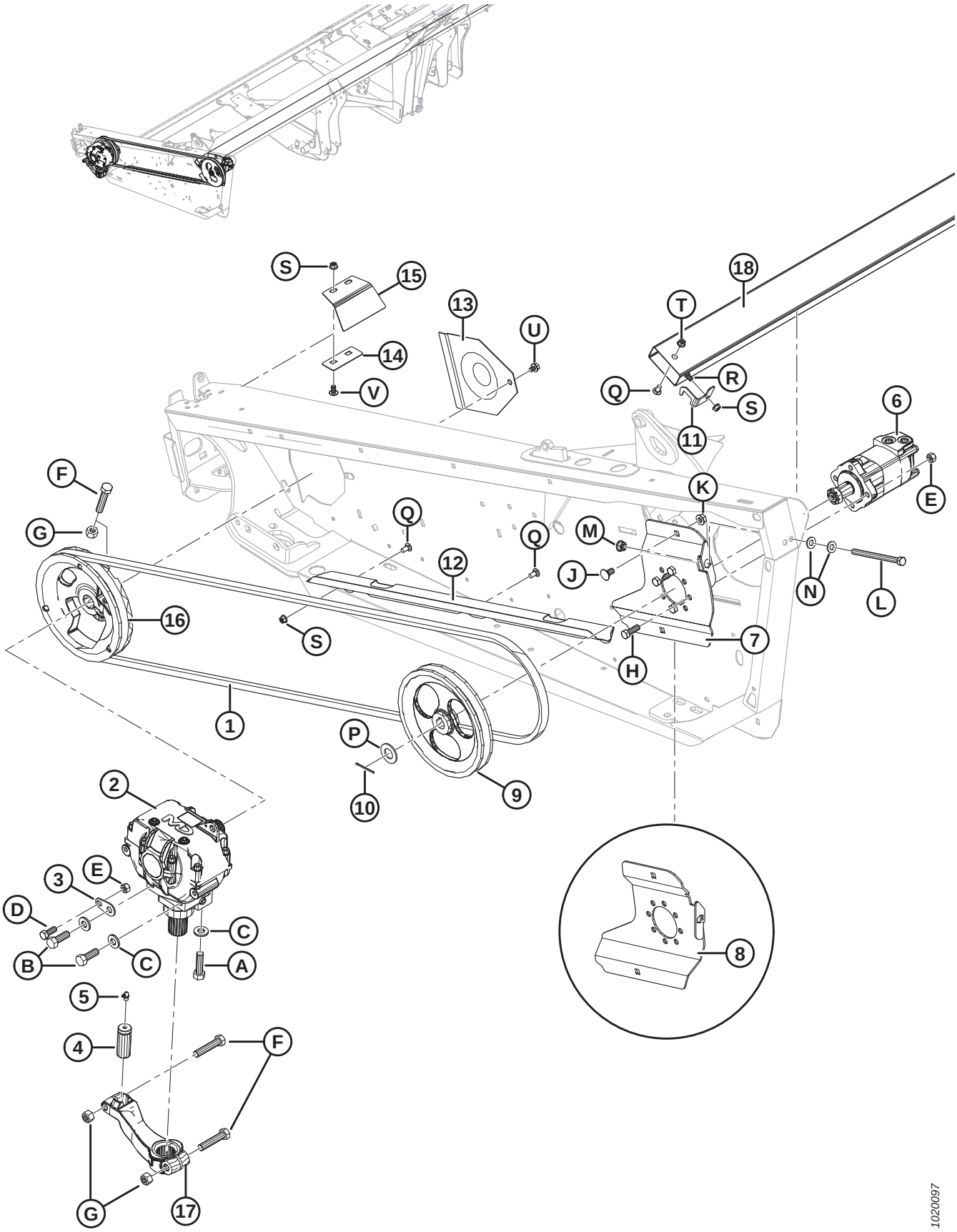

KNIFE DRIVE

Ref	Part Number	Description	Qty	Serial Number
1	145706	BELT – SK DRIVE [66]	1	
2	100532	DRIVE – WOBBLE BOX [67]	1	
3	132033	PLATE – WOBBLE BOX LOCATING TAB [66]	1	
4	113229	PIN – SICKLE HEAD [66]	1	
5	21194	FITTING – LUBRICATION 90 DEG 1/8 NPT [66]	1	
6	174217	MOTOR – KNIFE DRIVE, EATON [66]	1	
	174304	SEAL KIT		
7	294112	BRACKET – MOTOR MOUNT, WELDT EATON	1	
8	174270	BRACKET – MOTOR MOUNT, WELDT RH DK EATON	1	
9	174215	PULLEY – SK DRIVE [66]	1	
10	21006	PIN – COTTER 1/8 DIA X 2.0 ZP [66]	1	
11	125530	BRACKET – LH KNIFE KEEPER	1	
12	245943	GUIDE – BELT [66]	1	
13	102509	SHIELD [66]	1	
14	120141	RETAINER – WOBBLE BOX SHIELD [66]	1	
15	120140	SHIELD – LH WOBBLE BOX MOUNT	1	
	120194	SHIELD – RH WOBBLE BOX MOUNT	1	
16	252752	PULLEY ASSY – WOBBLE BOX SK [66]	1	
17	174992	ARM – WOBBLE BOX DRIVE [66]	1	
18	220010	TUBE – KNIFE STORAGE, 25 FT [68]	1	
	220011	TUBE – KNIFE STORAGE, 30 FT [68]	1	
	220012	TUBE – KNIFE STORAGE, 35 FT [68]	1	
	220013	TUBE – KNIFE STORAGE, 40 FT [68]	1	
	125764	TUBE – KNIFE STORAGE, 40 AND 45 FT DK [68]	1	
A	120900	BOLT – HEX HEAD- L9 5/8-11 UNC X 2.25 LG		
B	120899	BOLT – HEX HEAD- L9 5/8-11 UNC X 1.75 LG		
C	120901	WASHER – FLAT HARDENED 5/8 IN. NOMINAL (L9)		
D	21491	BOLT – HH 1/2 NC X 1.25 LG GR 5 ZP		
E	18697	NUT – HEX LOCK DT .500-13 UNC		
F	21583	BOLT – HH 5/8 NC X 3.0 LG GR 5 ZP		
G	18666	NUT – HEX LOCK DT 5/8-11 UNC ZP		
H	18723	BOLT – HH 1/2 NC X 1.5 LG GR 5 ZP		
J	21066	BOLT – RHSN 1/2 NC X 1 GR 5 ZP		
K	50186	NUT – FLG LOCK SM FACE DT 0.500-13 UNC GR 5		
L	50226	BOLT – HH 1/2 NC X 6.5 TFL GR 5 ZP		
M	21383	NUT – FLANGE .500-13 UNC (SER FACE)		
N	18599	WASHER – SAE FLAT 17/32 I.D. X 1-1/16 IN. O.D. ZP		
P	18603	WASHER – SAE FLAT 1-1/16 I.D. X 2.0 IN. O.D. ZP		

66. On untimed double-knife drive headers, the quantity is two.
67. On untimed double-knife drive headers, the quantity is two. For repair parts, refer to Section *20 Knife Drive Box, page 53*.
68. Located inside the round backtube of the frame.

KNIFE DRIVE

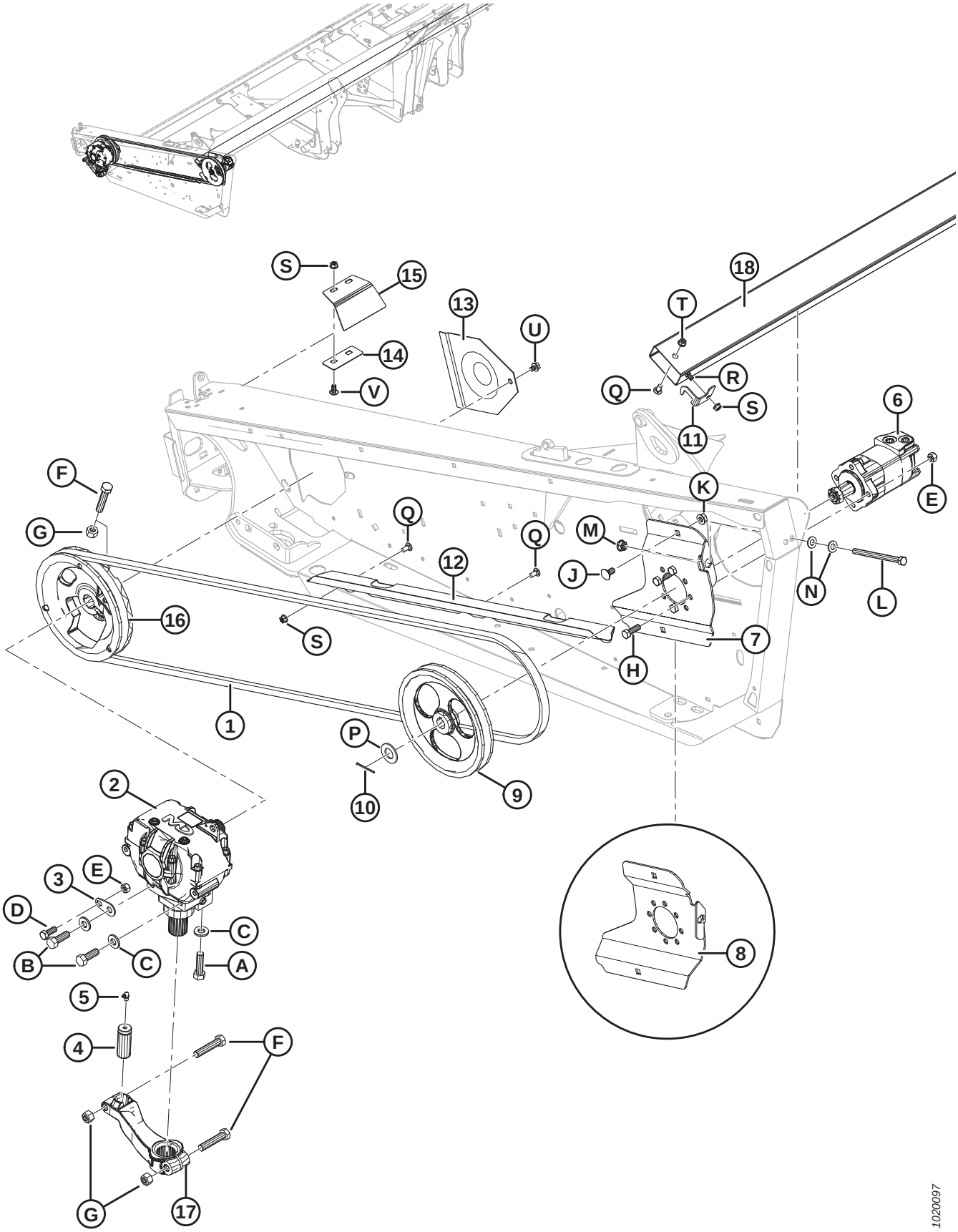
S
15
14
V
13
U
18
T
R
Q
S
11
6
E
K
M
J
N
L
7
H
F
G
Q
Q
12
S
16
1
P
10
9
2
3
E
D
B
C
C
A
5
4
F
G
17
8
1020097

KNIFE DRIVE

Ref	Part Number	Description	Qty	Serial Number
Q	21863	BOLT – RHSSN 3/8 NC X 0.75 LG GR 5 ZP		
R	21472	BOLT – RHSN 3/8 NC X 0.75 GR 5 ZP		
S	30228	NUT – FLANGE DT SMOOTH FACE 0.375-16 UNC		
T	21452	NUT – FLANGE (SER FACE) .375-16 UNC		
U	30693	BOLT – FLANGE (SER FACE) .375-16 UNC X 0.50 LG		
V	135157	SCREW – MACHINE		

17 Knife Drive Hydraulics – Single Knife (FD125, FD130, and FD135)

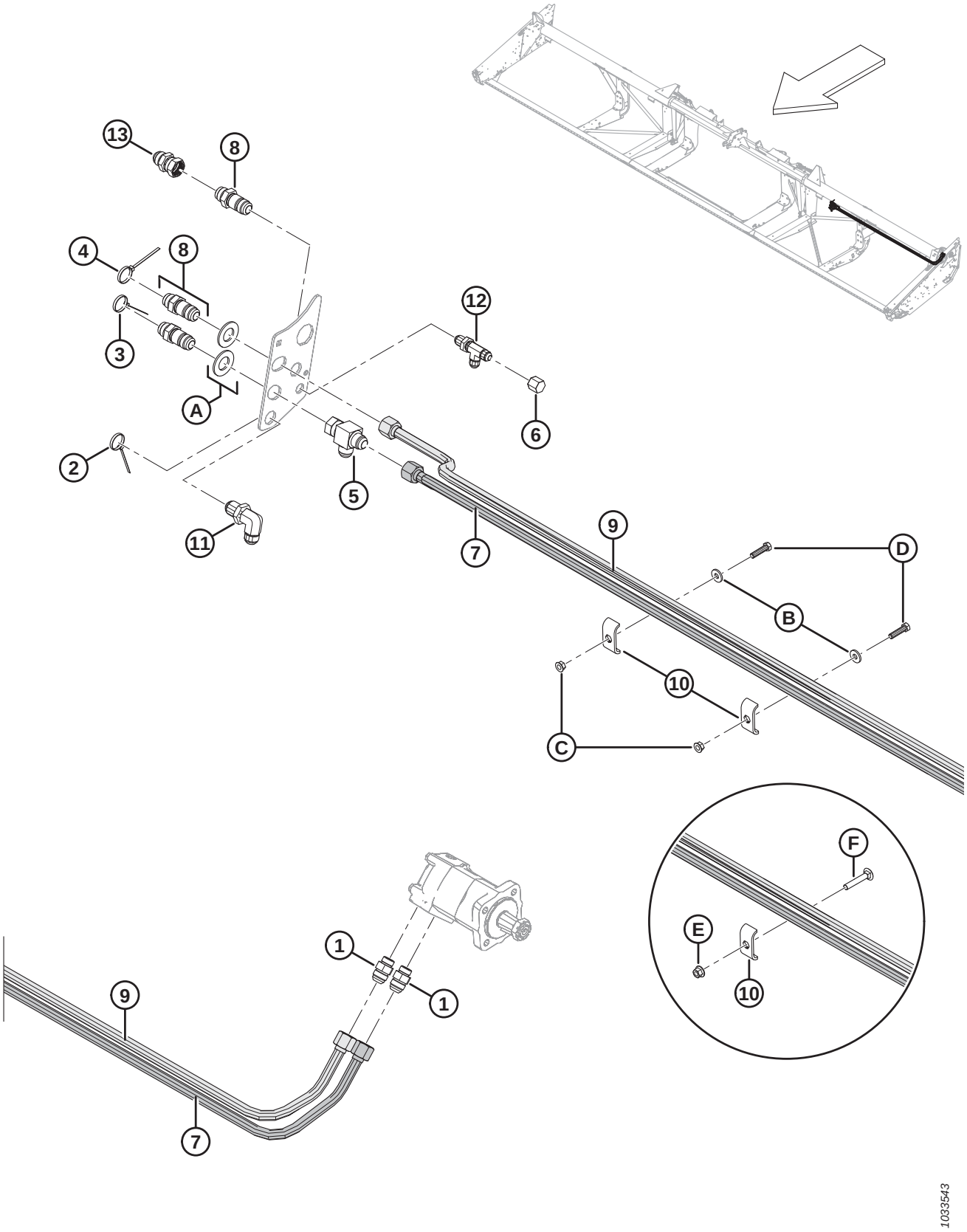

KNIFE DRIVE HYDRAULICS – SINGLE KNIFE (FD125, FD130, AND FD135)

Ref	Part Number	Description	Qty	Serial Number
1	30610	FITTING – CONNECTOR HYD	2	
2	40702	FASTENER – CABLE TIE (RED)	1	
3	40703	FASTENER – CABLE TIE (BLUE)	1	
4	40704	FASTENER – CABLE TIE (ORANGE)	1	
5	50086	FITTING – HYD TEE	1	
6	108233	CAP – 1/2 IN. TUBE	1	
7	326078	LINE – 25 FT FLEX KNIFE DRIVE RETURN	1	
	132772	LINE – 30 FT FLEX KNIFE DRIVE RETURN	1	
	132900	LINE – 35 FT FLEX KNIFE DRIVE RETURN	1	
8	135372	FITTING – 3/4 IN. HYD BULKHEAD 37° FLARE UNION	3	
9	326075	LINE – 25 FT FLEX KNIFE DRIVE PRESSURE	1	
	174250	LINE – 30 FT FLEX KNIFE DRIVE PRESSURE	1	
	174251	LINE – 35 FT FLEX KNIFE DRIVE PRESSURE	1	
10	174499	HOLDER – HOSE [69]		
11	252210	FITTING – 3/4 IN. HYD BULKHEAD 37° FLARE UNION 90	1	
12	252211	FITTING – 1/2 IN. HYD BULKHEAD 37° FLARE RUN TEE	1	
13	252414	FITTING – EXTENDER-EXPANDER 12-12	1	
A	18603	WASHER – SAE FLAT 1-1/16 I.D. X 2.0 IN. O.D. ZP		
B	20535	WASHER – FLAT [70]		
C	21452	NUT – FLANGE (SER FACE) .375-16 UNC [70]		
D	21561	BOLT – HH 3/8 NC X 1.5 LG GR 5 ZP [70]		
E	136441	NUT – HEX SER FLG M10 X 1.5-8-AA1J [71]		
F	136113	BOLT – RHSN M10 X 1.5 X 60-8.8-AA1J [71]		

69. Quantities: FD125 = 1, FD130 and FD135 = 2.
70. FD130 and FD135 only.
71. FD125 only.

18 Knife Drive Hydraulics – Single Knife (FD140)

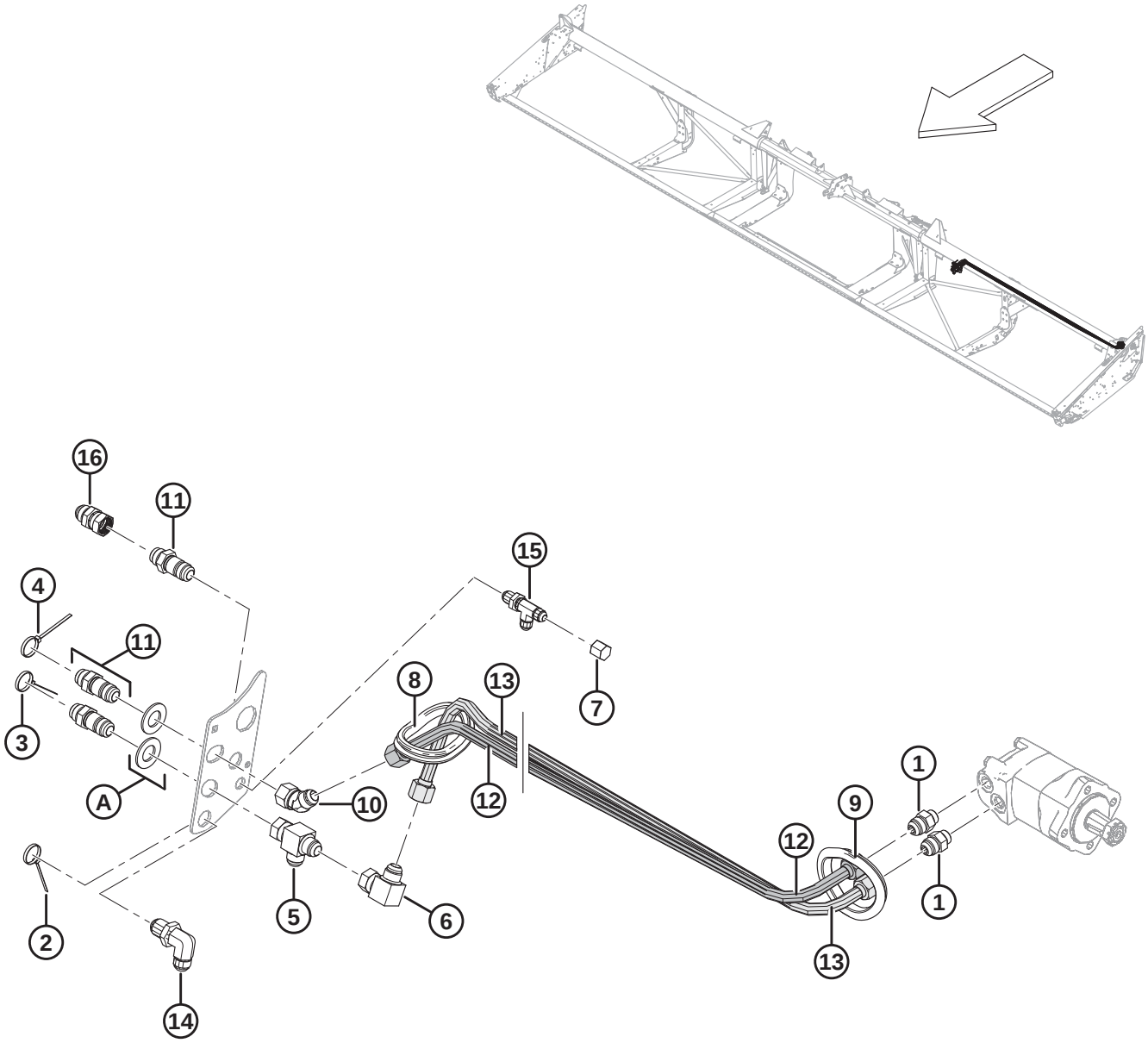

KNIFE DRIVE HYDRAULICS – SINGLE KNIFE (FD140)

Ref	Part Number	Description	Qty	Serial Number
1	30610	FITTING – CONNECTOR HYD	2	
2	40702	FASTENER – CABLE TIE (RED)	1	
3	40703	FASTENER – CABLE TIE (BLUE)	1	
4	40704	FASTENER – CABLE TIE (ORANGE)	1	
5	50086	FITTING – HYD TEE	1	
6	50175	FITTING – ELBOW 90° HYD	1	
7	108233	CAP – 1/2 IN. TUBE	1	
8	125377	GROMMET – 91 MM I.D.	1	
9	125722	GROMMET – 90 MM I.D.	2	
10	135240	FITTING – ELBOW 45° HYD	1	
11	135372	FITTING – 3/4 IN. HYD BULKHEAD 37° FLARE UNION	3	
12	174254	LINE – 40 FT FLEX SK KNIFE DRIVE PRESSURE	1	
13	174257	LINE – 40 FT FLEX SK KNIFE DRIVE RETURN	1	
14	252210	FITTING – 3/4 IN. HYD BULKHEAD 37° FLARE UNION 90	1	
15	252211	FITTING – 1/2 IN. HYD BULKHEAD 37° FLARE RUN TEE	1	
16	252414	FITTING – EXTENDER-EXPANDER 12-12	1	
A	18603	WASHER – SAE FLAT 1-1/16 I.D. X 2.0 IN. O.D. ZP		

19 Knife Drive Hydraulics – Double Knife (FD140 and FD145)

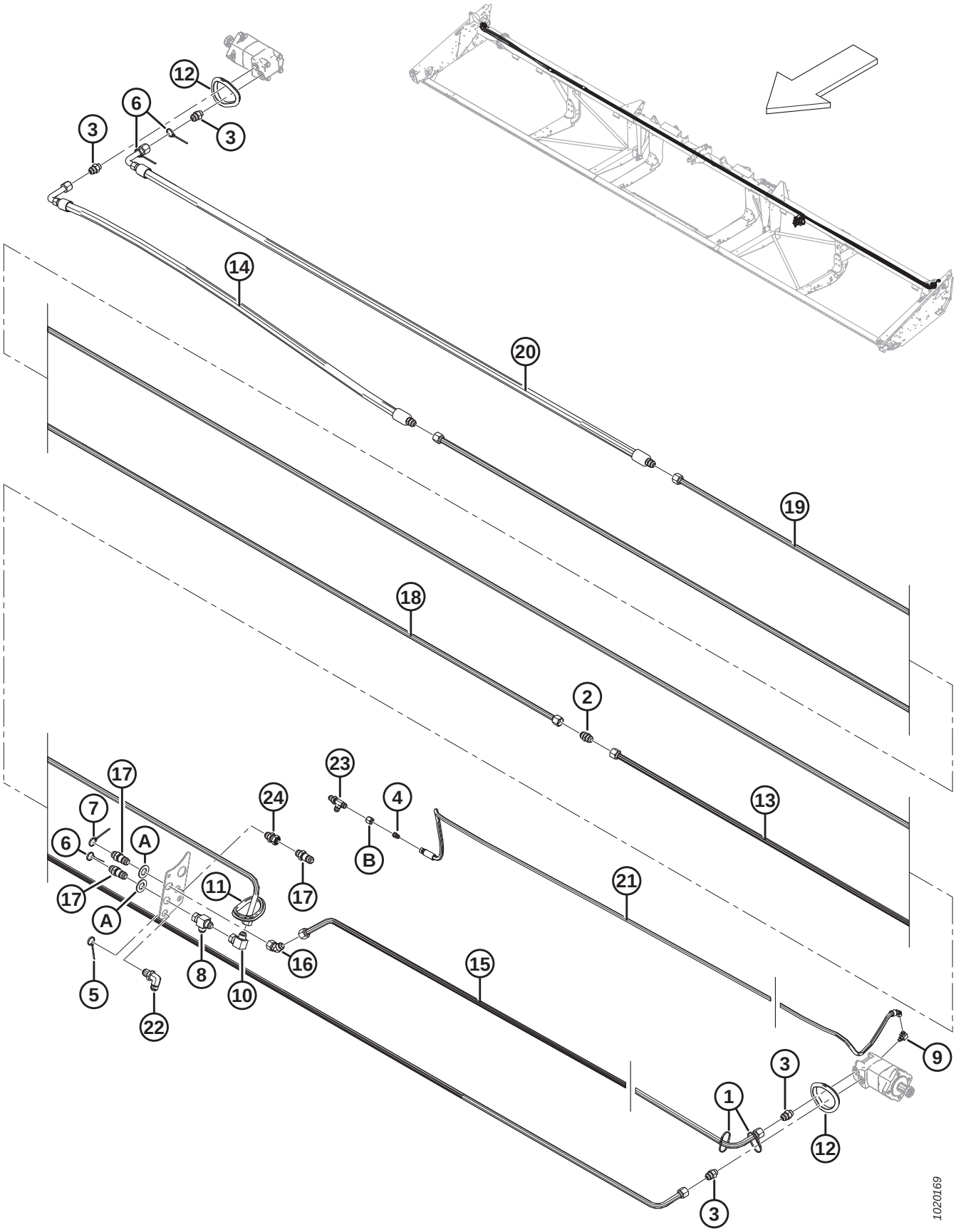

KNIFE DRIVE HYDRAULICS – DOUBLE KNIFE (FD140 AND FD145)

Ref	Part Number	Description	Qty	Serial Number
1	21763	FASTENER – CABLE TIE (BLACK)	2	
2	30376	FITTING – UNION HYD	1	
3	30610	FITTING – CONNECTOR HYD	4	
4	30981	FITTING – ADAPTER HYD REDUCER 1/2 X 3/8	1	
5	40702	FASTENER – CABLE TIE (RED)	1	
6	40703	FASTENER – CABLE TIE (BLUE)	3	
7	40704	FASTENER – CABLE TIE (ORANGE)	1	
8	50086	FITTING – HYD TEE	1	
9	50104	FITTING – ELBOW 90° HYD	1	
10	50175	FITTING – ELBOW 90° HYD	1	
11	125377	GROMMET – 91 MM I.D.	1	
12	125722	GROMMET – 90 MM I.D.	3	
13	125670	LINE – DOUBLE KNIFE DRIVE LH TO RH MOTOR	1	
14	125672	HOSE – HYD, 40 FT DK CONNECTOR TO RH MOTOR	1	
	165294	HOSE – HYD, 45 FT DK TO/FROM RH MOTOR	1	
15	125777	LINE – 40 FT KNIFE DRIVE PRESSURE	1	
	125780	LINE – 45 FT KNIFE DRIVE PRESSURE	1	
16	135240	FITTING – ELBOW 45° HYD	1	
17	135372	FITTING – 3/4 IN. HYD BULKHEAD 37° FLARE UNION	3	
18	165297	LINE – CONNECTOR	1	
19	174253	LINE – DOUBLE KNIFE DRIVE RH MOTOR RETURN	1	
20	174256	HOSE – HYD, 40 FT DK RH MOTOR RETURN	1	
	165294	HOSE – HYD, 45 FT DK TO/FROM RH MOTOR	1	
21	174300	HOSE – 40 FT CASE DRAIN	1	
	174299	HOSE – 45 FT CASE DRAIN	1	
22	252210	FITTING – 3/4 IN. HYD BULKHEAD 37° FLARE UNION 90	1	
23	252211	FITTING – 1/2 IN. HYD BULKHEAD 37° FLARE RUN TEE	1	
24	252414	FITTING – EXTENDER-EXPANDER 12-12	1	
A	18603	WASHER – SAE FLAT 1-1/16 I.D. X 2.0 IN. O.D. ZP		
B	21069	NUT – TUBE 37° JIC 1/2 IN.		

20 Knife Drive Box

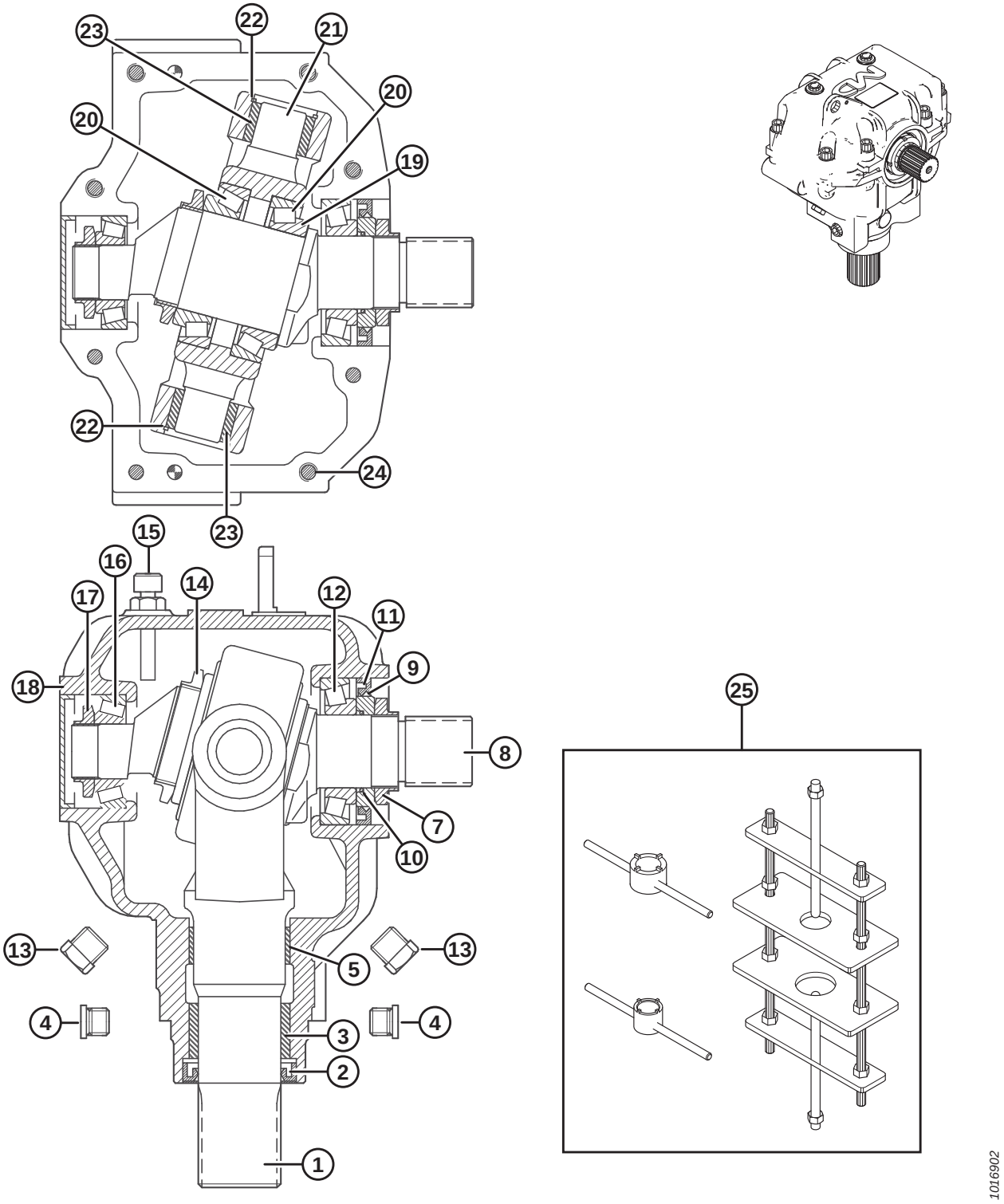

KNIFE DRIVE BOX

NOTE:

Apply retaining compound (Loctite® 603 or equivalent) to output yoke (MD #100706) and input shaft (MD #100710) before assembly.

Ref	Part Number	Description	Qty	Serial Number
	100532	DRIVE – SICKLE, COMPLETE	1	
1	100706	YOKE – OUTPUT	1	
2	100707	SEAL – OIL, OUTPUT SHAFT	1	
3	100708	BUSHING – BRONZE	1	
4	252423	PLUG – HEX SOCKET	2	
5	100726	BUSHING – STEEL	1	
7	100709	NUT – SPECIAL	1	
8	100710	SHAFT – INPUT	1	
9	102629	SPACER – 60 MM O.D.	1	
10	100712	O-RING	1	
11	102630	SEAL – OIL, INPUT SHAFT, 60 MM I.D.	1	
12	100714	BEARING ASSEMBLY – CUP AND CONE	1	
13	103096	PLUG – OIL DRAIN	2	
14	100715	NUT – LOCK, M55 X 2 IN.	1	
15	100716	PLUG – BREATHER, C/W DIPSTICK	1	
16	100717	BEARING ASSEMBLY – CUP AND CONE	1	
17	100718	NUT – LOCK, M30 X 1.5 IN.	1	
18	100719	CAP – DUST	1	
19	113152	SHIM – INPUT SHAFT	1	
20	100720	BEARING ASSEMBLY – CUP AND CONE	2	
21	100721	PIVOT	1	
22	100722	RING – RETAINING, INTERNAL	2	
23	100723	BUSHING – BRONZE	2	
24	113153	BOLT – SOCKET HEAD, M10 X 50 MM	8	
25	139003	TOOL KIT – SICKLE DRIVE BOX DISASSEMBLY/ASSEMBLY	A/R	

21 Draper Carrier Deck and Tensioner

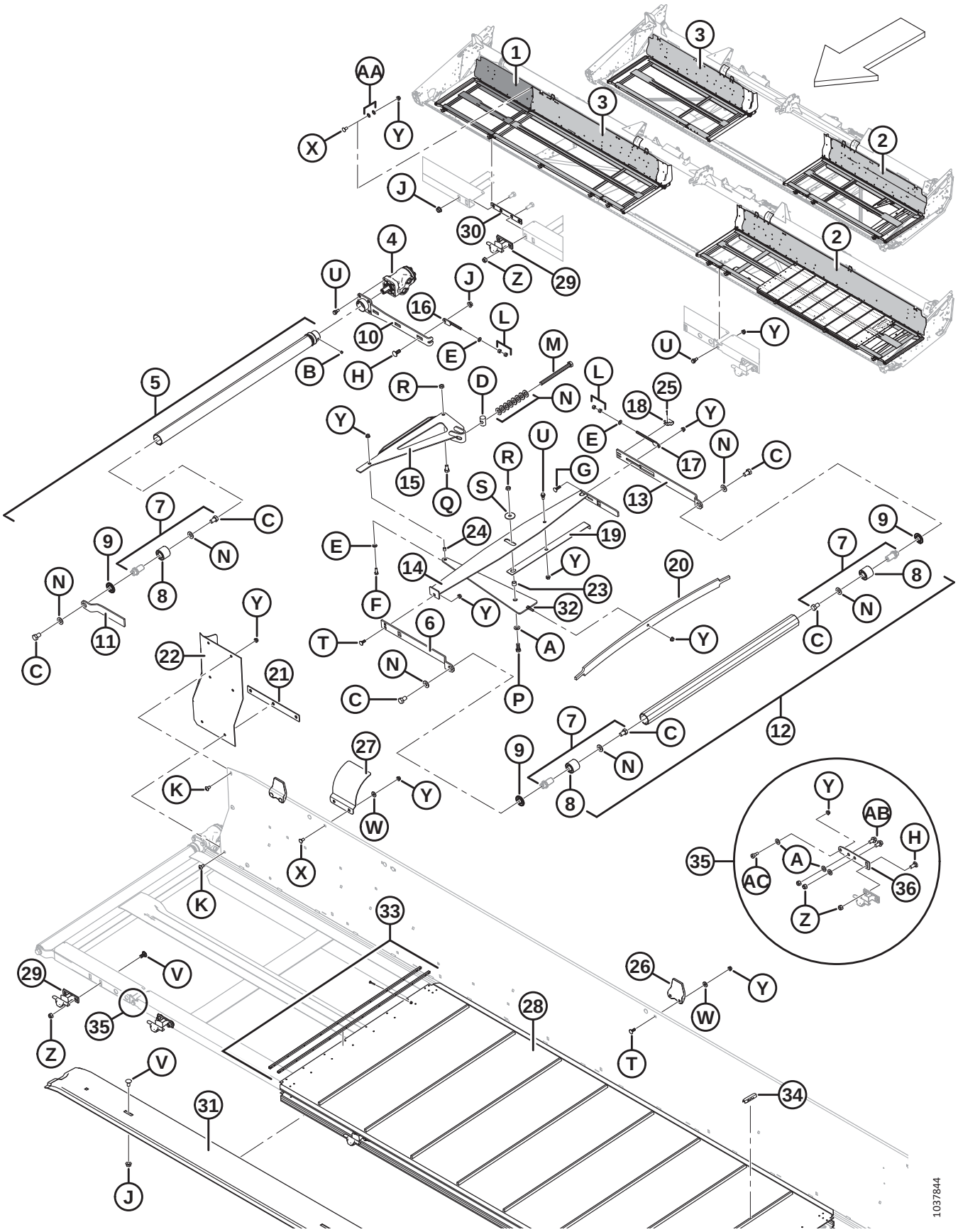

DRAPER CARRIER DECK AND TENSIONER

Ref	Part Number	Description	Qty	Serial Number
1	245042	DECK WELDT – OUTER (FD140 RH)	1	
	125602	DECK WELDT – OUTER (FD145 LH)	1	
	125607	DECK WELDT – OUTER (FD145 RH)	1	
2	326165	DECK WELDT – 25 FT LH FLEX C/W DECAL	1	
	123950	DECK WELDT – 30 FT LH FLEX C/W DECAL	1	
	123952	DECK WELDT – 35 FT LH FLEX C/W DECAL	1	
	123954	DECK WELDT – 40 FT LH FLEX C/W DECAL	1	
	123957	DECK WELDT – 45 FT LH FLEX C/W DECAL	1	
3	326166	DECK WELDT – 25 FT RH FLEX C/W DECAL	1	
	123951	DECK WELDT – 30 FT RH FLEX C/W DECAL	1	
	123953	DECK WELDT – 35 FT RH FLEX C/W DECAL	1	
	123955	DECK WELDT – 40 FT RH FLEX C/W DECAL	1	
	123956	DECK WELDT – 40 FT RH FLEX SPLIT (INNER) / 45 FT RH FLEX C/W DECAL	1	
4	220936	MOTOR – HYD DANFOSS 2.44 CI	2	
	220944	SEAL KIT		
	123306	KEY – WOODRUFF (1/4 X 1 NOM)		
5	255383	ASSY – RUBBER ROLLER W/ SCREWS [72]	2	
6	145106	ARM – ROLLER SUPPORT	2	
7	165735	PIN ASSY – DRAPER ROLLER	6	
8	132607	BEARING – DOUBLE ROW BALL 52 OD X 25 BORE	6	
9	120845	SEAL	6	
10	253160	ARM – WELDT	2	
11	145148	ARM – LH ROLLER SUPPORT	1	
	120058	ARM – RH ROLLER SUPPORT	1	
12	174714	IDLER ROLLER ASSY [73]	2	
13	145122	ARM SUPPORT REAR	2	
14	220183	MEMBER – LH STABILIZER WELDT	1	
	220184	MEMBER – RH STABILIZER WELDT	1	
15	220181	BELL CRANK WELDT	2	
16	145593	ROD – ADJUSTER WELDT	2	
17	145345	ROD – ADJUSTER WELDT	2	
18	145357	LOOP – IDLER ARM	2	
19	145428	INDICATOR	2	
21	145548	LEAF SPRING – TENSIONER	2	
21	304783	BAR WELDT	2	
22	125588	EXTENSION LH – BACKSHEET	1	
	125589	EXTENSION RH – BACKSHEET	1	
23	132531	SPACER	2	
24	132532	SPACER	2	
25	18604	PIN – COTTER 3/32 DIA X 3/4 ZP	2	

72. Includes steel disk seal (MD #120845), draper roller pin assembly (MD #165735), and two set screws (MD #132451).
73. Includes steel disk seal (MD #120845) and draper roller pin assembly (MD #165735).

DRAPER CARRIER DECK AND TENSIONER

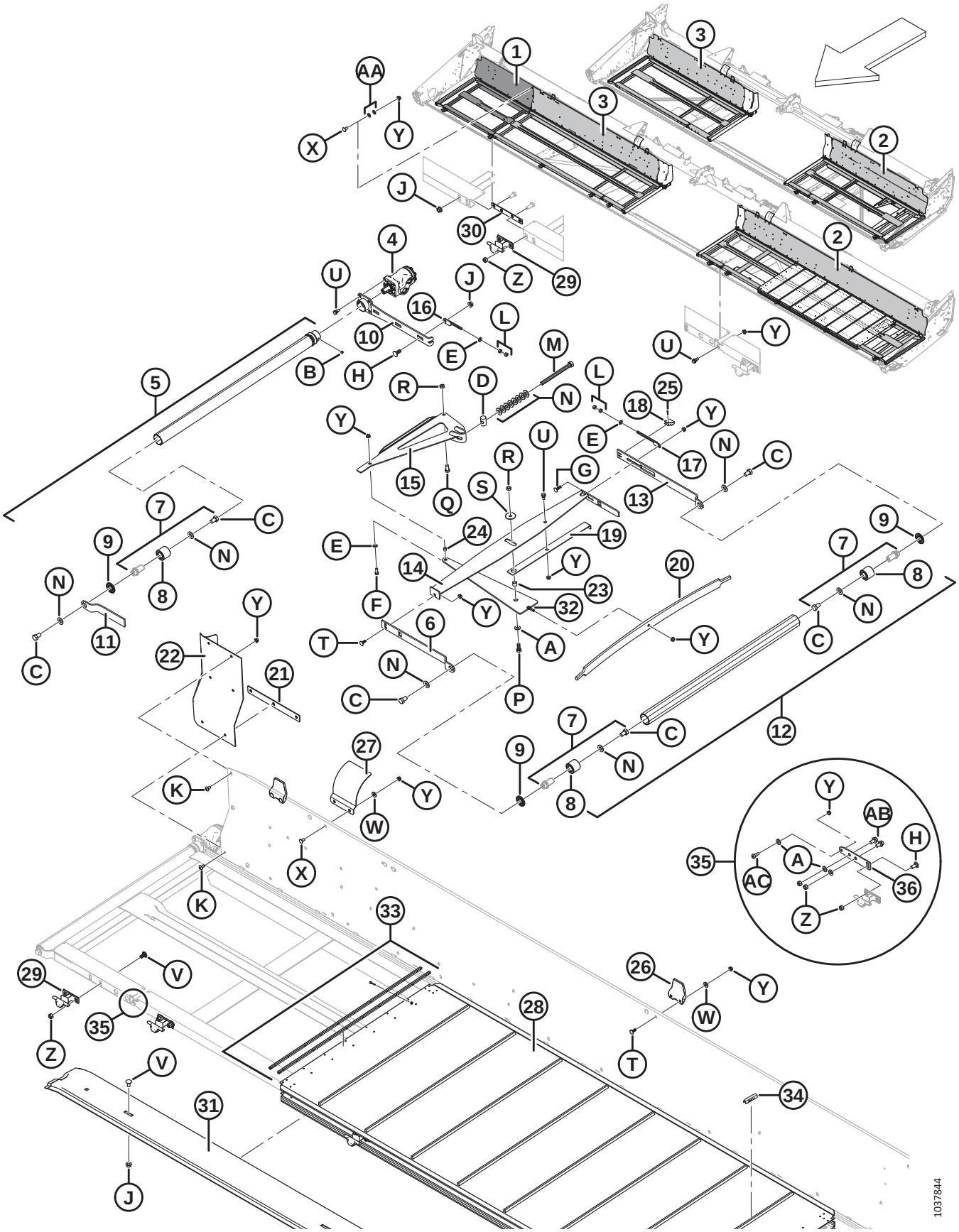

DRAPER CARRIER DECK AND TENSIONER

Ref	Part Number	Description	Qty	Serial Number
26	145840	GUIDE – BACKSHEET [74]	4	
27	125294	SHIELD – FLEX BACKTUBE JUNCTION	2	
28	220636	DRAPER – 25 FT, WCCO	2	
	172194	**DRAPER – 25 FT, LEGG (OPTION)**	**2**	
	172195	DRAPER – 30 FT LEGG	2	
	220637	**DRAPER – 30FT, WCCO (OPTION)**	**2**	
	172196	DRAPER – 35 FT LEGG	2	
	220638	**DRAPER – 35FT, WCCO (OPTION)**	**2**	
	220639	DRAPER – 40 FT WCCO	2	
	172197	**DRAPER – 40 FT, LEGG (OPTION)**	**2**	
	220640	DRAPER – 45 FT WCCO	2	
	172198	**DRAPER – 45 FT, LEGG (OPTION)**	**2**	
	220642	DRAPER – 150 FT BULK ROLL	A/R	
	220641	DRAPER – REPAIR KIT [75]	A/R	
29	120009	SUPPORT – DECK (CASTING) [76]	8	
30	132692	BAR – WELDT [77]	1	
31	220387	SUPPORT – LOWER DRAPER TRACK, 30 FT FLEX	2	
	220384	SUPPORT – LOWER DRAPER TRACK, 35 FT FLEX	2	
	220264	SUPPORT – LOWER DRAPER TRACK, 40 FT FLEX / 35 FT RIGID	2	
	220262	SUPPORT – LOWER DRAPER TRACK, 45 FT FLEX	2	
32	120462	MEMBER – COMPRESSION WELDT	2	
33	132777	KIT – SLAT CONNECTOR	A/R	
	172710	KIT – DRAPER CONNECTOR HARDWARE	A/R	
34	294858	DRAPER CLIPS – TAPER CLEAT, 25 PACK [78]	A/R	
	294859	DRAPER CLIPS – SQUARE CLEAT, 25 PACK [78]	A/R	
35	304316	KIT – FLEX HINGE REPAIR [79]	A/R	
36	304263	HINGE – FLEX DECK FRAME LH	1	
	304317	HINGE – FLEX DECK FRAME RH	1	
A	18599	WASHER – SAE FLAT 17/13 I.D. X 1-1/16 IN. O.D. ZP		
B	132451	SCREW – SET HEX SOC CUP PT 3/8 NC X 3/8 LG		
C	145249	BOLT – HH 5/8 NF X 1.0 LG GR 5 ZP		
D	145361	NUT – SPECIAL		
E	18598	WASHER – SAE FLAT 13/32 I.D. X 13/16 IN. O.D. ZP		
F	20077	BOLT – HEX HD 3/8 NC X 1.0 LG GR 5 ZP		
G	19966	BOLT – RHSN 3/8 NC X 1.25 LG GR 5 ZP		
H	21471	BOLT – RHSN 1/2 NC X 1.25 GR 5 ZP		

74. Quantity is 3 for FD140 flex-split and 2 for FD145.
75. Includes 20-inch draper material and two connector slats.
76. Quantity is 6 for FD125, 10 for FD140, and 12 for FD145.
77. Used on FD140 flex split and FD145 flex only. Quantity: one for FD140 flex split and two for FD145 flex.
78. Kit includes 25 clips (NSS) and instructions.
79. Kit includes RH hinge (MD #304317), LH hinge (MD #304263), and hardware.

DRAPER CARRIER DECK AND TENSIONER

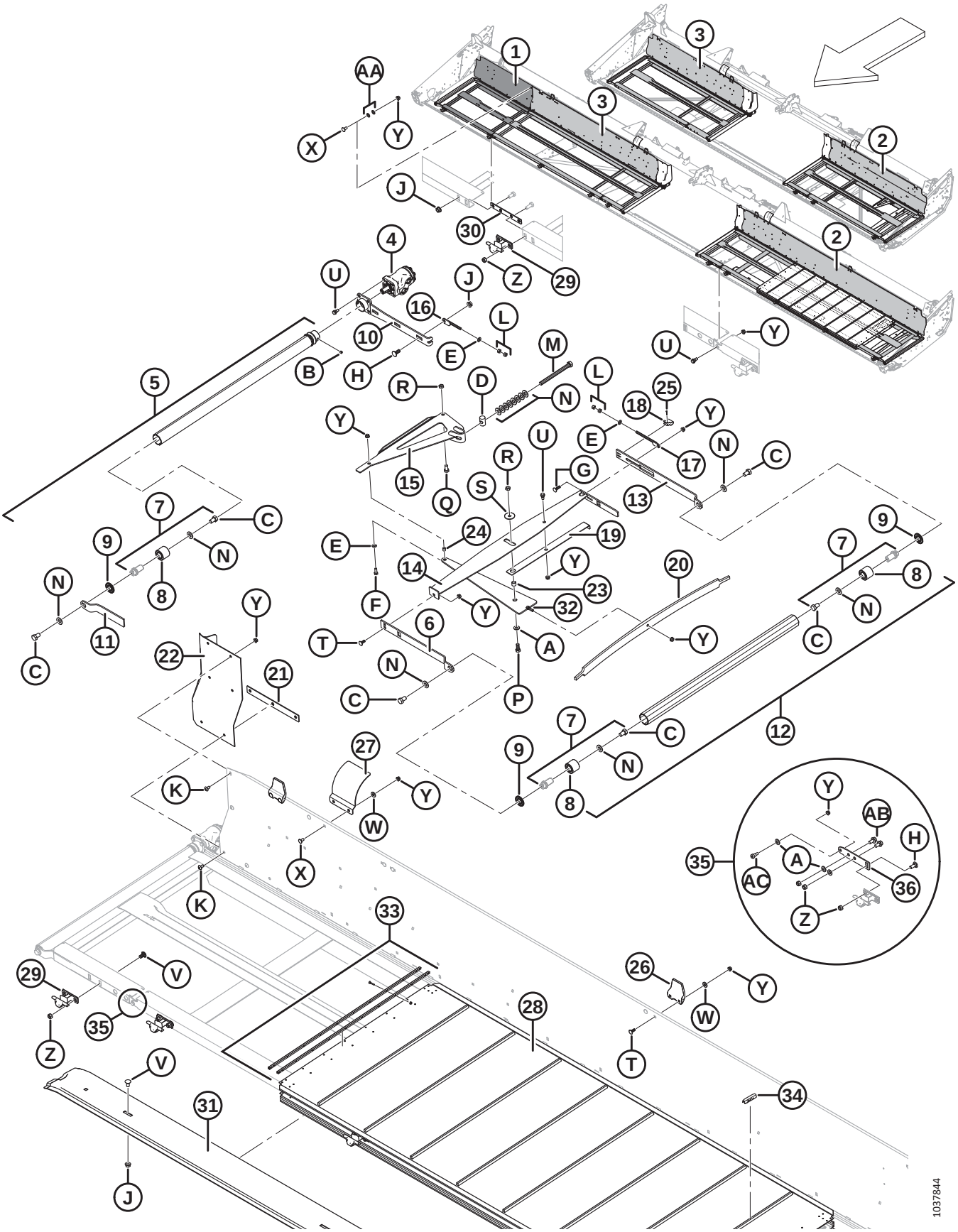

Ref	Part Number	Description	Qty	Serial Number
J	50186	NUT – FLG LOCK SM FACE DT 0.500-13 UNC GR 5		
K	135157	SCREW – MACHINE		
L	18590	NUT – HEX 3/8-16 UNC GR 5 ZP		
M	135906	BOLT – HH 5/8 NC X 7.5 LG TFL GR 5 ZP		
N	30441	WASHER – HARDENED		
P	21491	BOLT – HH 1/2 NC X 1.25 LG GR 5 ZP		
Q	21575	BOLT – HH 1/2 NC X 1.0 LG GR 5 ZP		
R	137727	NUT – HEX JAM DT 1/2-13 UNC GR 5 ZP		
S	42592	WASHER – FLAT		
T	19965	BOLT – RHSN 3/8 NC X 1.0 GR 5 ZP		
U	172259	BOLT – SHOULDER .375-16 UNC		
V	21066	BOLT – RHSN 1/2 NC X 1 GR 5 ZP		
W	20535	WASHER – FLAT		
X	21863	BOLT – RHSSN 3/8 NC X 0.75 LG GR 5 ZP		
Y	30228	NUT – FLANGE DT SMOOTH FACE 0.375-16 UNC		
Z	18697	NUT – HEX LOCK DT .500-13 UNC		
AA	172363	WASHER – BELLEVILLE 3/8 [80]		
AB	21449	BOLT – HEX FLG HD 1/2-13 X 1 GR5-AA1J		
AC	320031	SCREW – HEX SOC HD SHLDR 1/2-3/8-GR8-ZINC		

80. FD140 and FD145 only.

22 Draper Deflectors

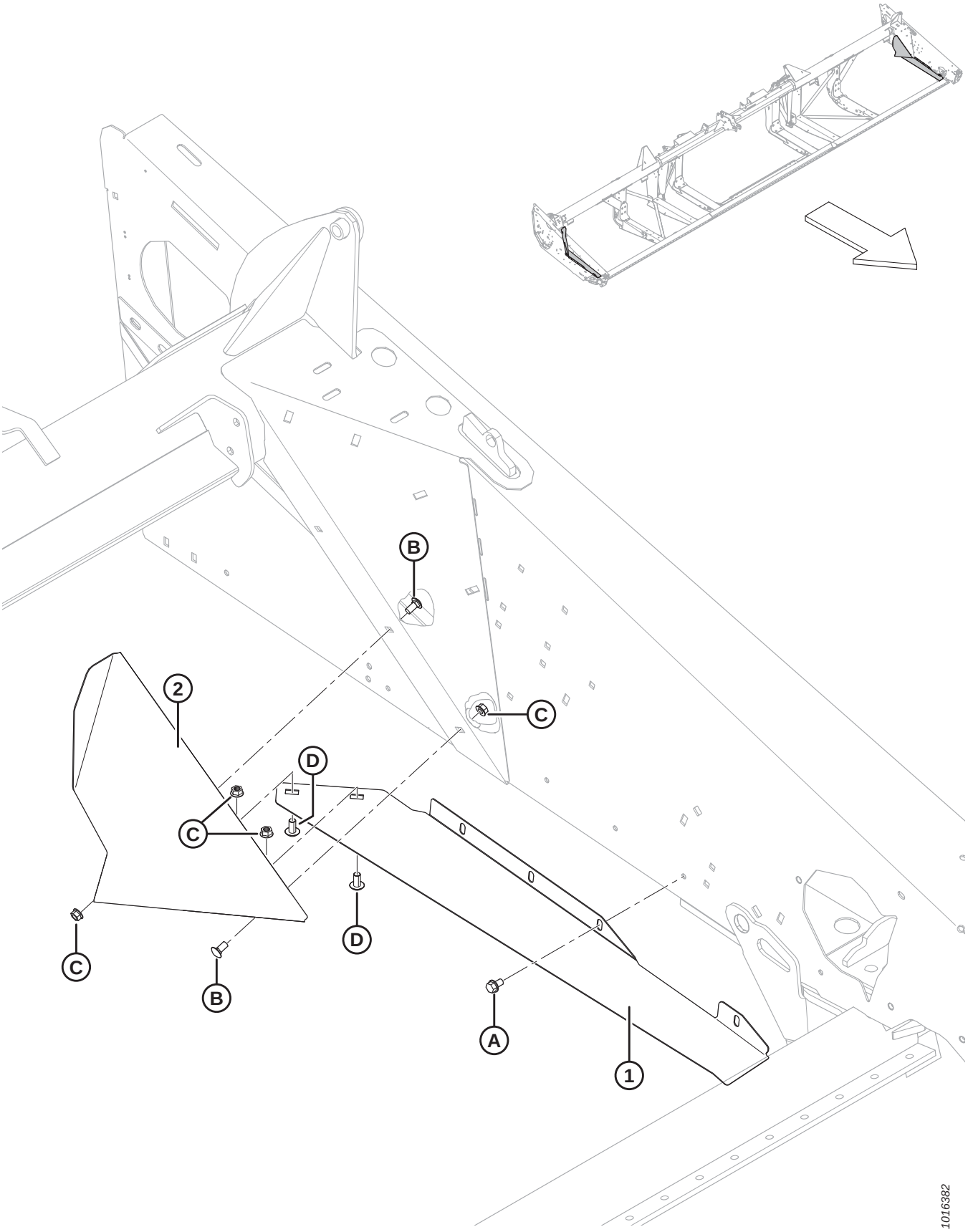

DRAPER DEFLECTORS

Ref	Part Number	Description	Qty	Serial Number
1	304257	DEFLECTOR – ANGLE, LH	1	
	304258	DEFLECTOR – ANGLE, RH	1	
2	125741	DEFLECTOR – LH	1	
	125742	DEFLECTOR – RH	1	
A	101898	SCREW – HEX WASH HD THD ROLLING 3/8 NC X 5/8		
B	21863	BOLT – RHSSN 3/8 NC X 0.75 LG GR 5 ZP		
C	30228	NUT – FLANGE DT SMOOTH FACE 0.375-16 UNC		
D	135157	SCREW – MACHINE		

23 Draper Drive – Manual Deck Shift

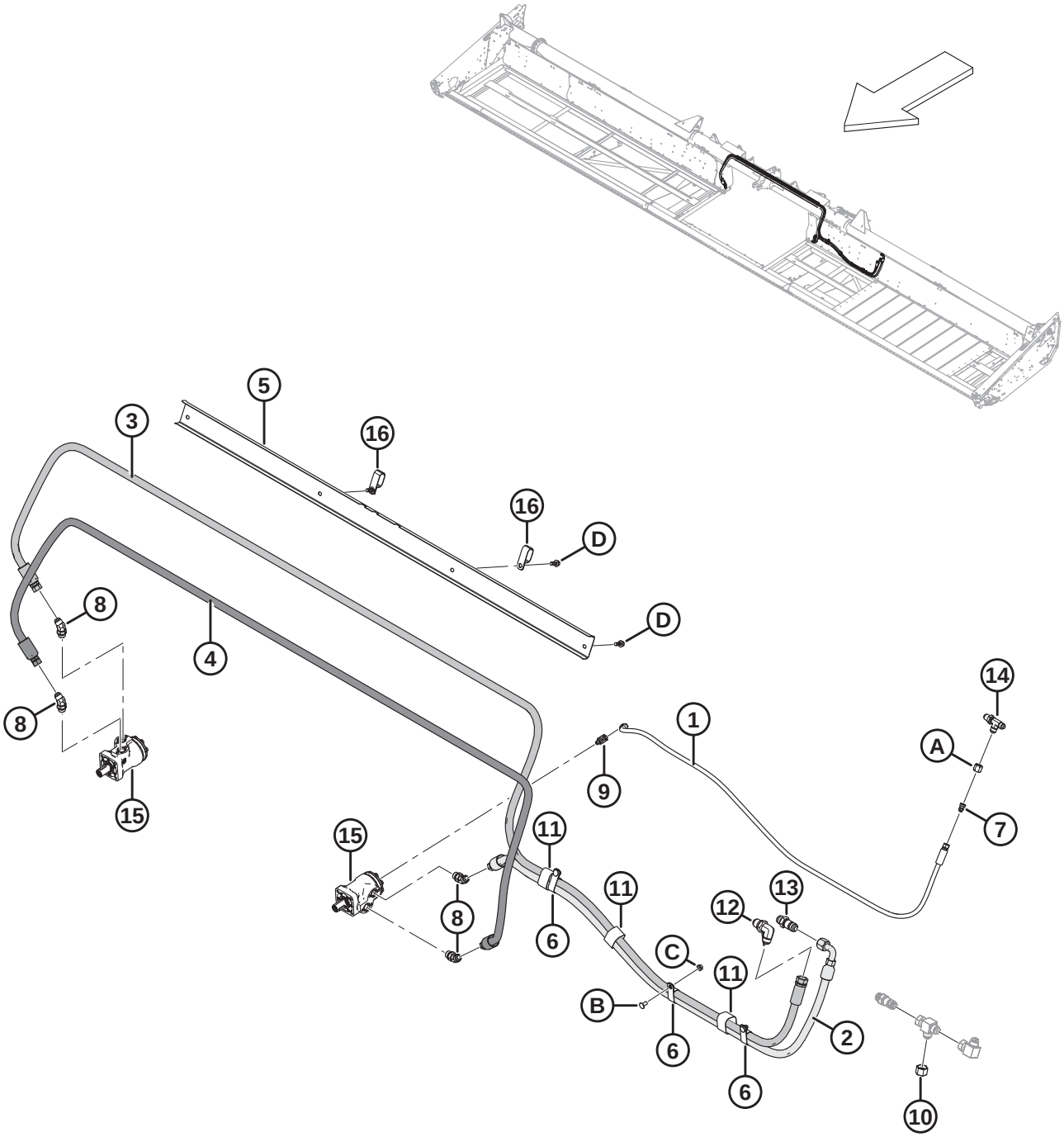

Ref	Part Number	Description	Qty	Serial Number
	295691	KIT – FM100 ON FD75 [81]		
1	245590	HOSE – HYD, 1/4 IN. I.D., 1810 MM LG, METAL REIN.	1	
2	279284	HOSE – HYD, 5/8 IN. I.D., 1840 MM LG, METAL REIN.	1	
3	279285	HOSE – HYD, 5/8 IN. I.D., 4770 MM LG, METAL REIN.	1	
4	279286	HOSE – HYD, 5/8 IN. I.D., 3440 MM LG, METAL REIN.	1	
5	304031	HOLDER – HOSES	1	
6	252942	CLAMP – INSULATED 1 INCH	3	
7	30981	FITTING – ADAPTER HYD REDUCER 1/2 X 3/8	1	
8	50103	FITTING – ELBOW 45° HYD CW O-RING	4	
9	50104	FITTING – ELBOW 90° HYD	1	
10	30999	CAP – 3/4 IN. TUBE 37° FLARE	1	
11	135443	FASTENER – CINCH STRAP 4 IN. LG	3	
12	252210	FITTING – 3/4 IN. HYD BULKHEAD 37° FLARE UNION 90	1	
13	135372	FITTING – 3/4 IN. HYD BULKHEAD 37° FLAIR UNION	1	
14	252211	FITTING –1/2 IN. HYD BULKHEAD 37° FLARE RUN TEE	1	
15	REF	MOTOR – HYD [82]		
16	**50022**	**CLAMP – INSULATED 15/16 INCH** [83]	**2**	
A	21069	NUT – TUBE 37° JIC 1/2 IN.		
B	21863	BOLT – RHSSN 3/8 NC X 0.75 LG GR 5 ZP		
C	30228	NUT – FLANGE DT SMOOTH FACE 0.375-16 UNC		
D	**21975**	**BOLT – HEX FLG SER HD 3/8-16 X 1.0 GR 5 - AA1J**		

81. Flex header conversion kit for installing an FM100 in a FD75. Kit includes all listed parts.
82. Refer to Section *21 Draper Carrier Deck and Tensioner, page 55*.
83. For FD125 headers only; secures the reel hoses to the back of hose holder (MD #304301).

24 Pick-Up Reel – Single-Reel Headers (FD125)

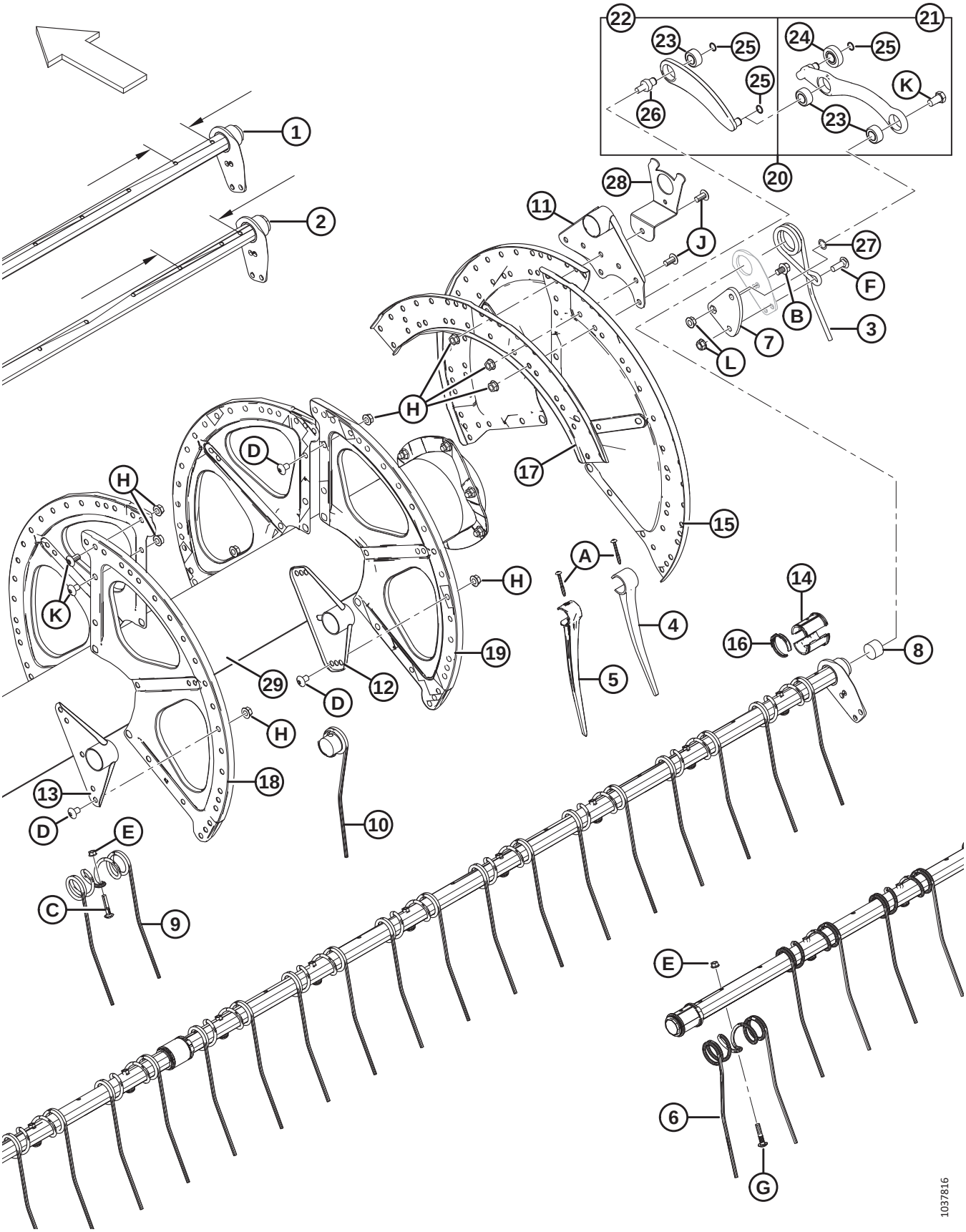

IMPORTANT:

Quantities for narrow (#1) and wide (#2) stagger tine tubes vary; Narrow stagger = 120 mm / Wide stagger = 196 mm. See illustration the for measurement location.

Ref	Part Number	Description	Qty 6/9 Bat	Serial Number
	B6981	**KIT – 25FT SR TINE TUBE CONV, 6–9 BAT PLASTIC FINGERS** [84]		
1	326207	TINE TUBE – 25 FT FLEX, NARROW	**3/5**	
2	326208	TINE TUBE – 25 FT FLEX, WIDE	**3/5**	
3	245084	FINGER – CAM END	**6/9**	
4	174849	FINGER – PLASTIC HEAVY DUTY (10 PACK) [85]		
5	**311524**	**FINGER – PLASTIC, LH, ANGLED 52 MM (10 PACK)**	**6/9**	
6	137971	FINGER – DOUBLE RH REEL TAIL END [86]		
7	137285	ARM – CRANK MACHINING	**6/9**	
8	137980	PLUG – TINE TUBE	**12/18**	
9	137092	FINGER [87]		
10	137754	FINGER – SINGLE CONCENTRIC (RH) [88]		
11	137506	ARM WELDT – CAM END	**6/9**	
12	137535	ARM WELDT	**18/27**	
13	137543	ARM WELDT – TAIL END	**6/9**	
14	220939	BUSHING HALF – TINE TUBE (25 PACK) [89]		
15	137536	SECTOR – CAM END, 14 GA	**3/3**	
16	220941	CLAMP – TINE TUBE BUSH, CENTER RIB (5 PACK) [90]		
17	137532	CHANNEL – CAM DISC	**3/3**	
18	137142	SECTOR – TAIL END, 16 GA [91]	**3/3**	
19	137277	SECTOR – MID-SPAN, 18 GA	**9/9**	
20	304955	ARM – CAM CONTROL LINKAGE [92]	**6/9**	
21	311617	ARM – TINE CONTROL ASSEMBLY [93]	**6/9**	
22	311615	ARM – ASSEMBLY [94]	**6/9**	
23	273347	BEARING	**18/27**	
24	273524	BEARING – CAM FOLLOWER	**6/9**	
25	273536	RING – EXT RETAINING	**18/27**	
26	304954	STUD – LINK	**6/9**	

84. Kits available through Whole Goods only.
85. Quantities: 6 Bat plastic = 297; 9 Bat plastic = 444.
86. Quantities: 6 Bat steel = 6.
87. Quantities: 6 Bat steel = 138.
88. Quantities: 6 Bat steel = 9.
89. Includes 25 tine tube bushings. Quantities: 6 Bat steel and plastic = 60; 9 Bat plastic = 90.
90. Quantities: 6 Bat steel and plastic = 30; 9 Bat plastic = 45.
91. Used at the tail (left) end of the reel.
92. Includes assembly arm (MD #311615), tine control assembly arm (MD #311617), link stud (MD #304954), and two retaining rings (MD #273536).
93. Includes two bearings (MD #273347), cam follower bearing (MD #273524), and two retaining rings.
94. Includes bearing (MD #273347) and retaining ring (MD #273536).

PICK-UP REEL – SINGLE-REEL HEADERS (FD125)

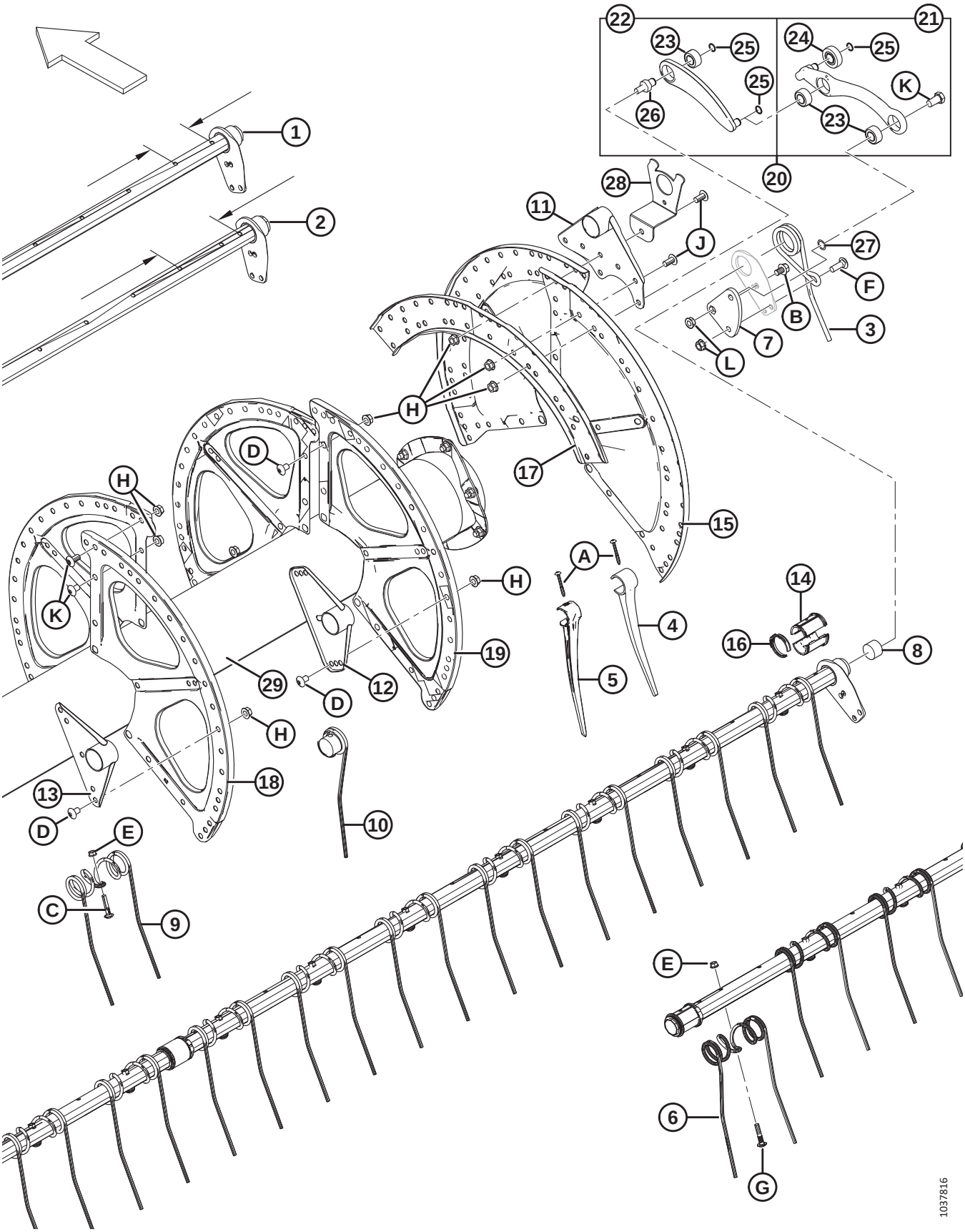

Ref	Part Number	Description	Qty 6/9 Bat	Serial Number
27	137529	SHIM – CRANK BEARING	**6/9**	
28	REF	SUPPORT – ENDSHIELD REEL [95]		
29	137909	CENTER TUBE – 25 FT, C/W REFLECTORS	1	
A	252687	SCREW – TORX, 48° DBL HELIX 1/4 x 2-1/4 ZP		
B	105066	BOLT – HH FLG (SER FACE) 1/2-NC X 0.75 GR 5 ZP		
C	137118	BOLT – BHRN 3/8 NC WITH RETAINER		
D	105135	SCREW – MACHINE		
E	30228	NUT – FLG DT SMOOTH FACE 0.375-16 UNC		
F	21469	BOLT – RHSN 1/2 NC X 1.5 LG GR 5 ZP		
G	137118	BOLT – ROUND HD 3/8 NC RIB NK NC		
H	50186	NUT – FLG LOCK SM FACE DT 0.500-13 UNC GR 5		
J	105136	SCREW – MACHINE		
K	105141	BOLT – LOCKING SHOULDER		
L	21383	NUT – FLANGE .500-13 UNC (SER FACE)		

95. Refer to Section *26 Reel Endshield Components, page 77*.

25 Pick-Up Reel – Double-Reel Headers (FD130, FD135, FD140, and FD145)

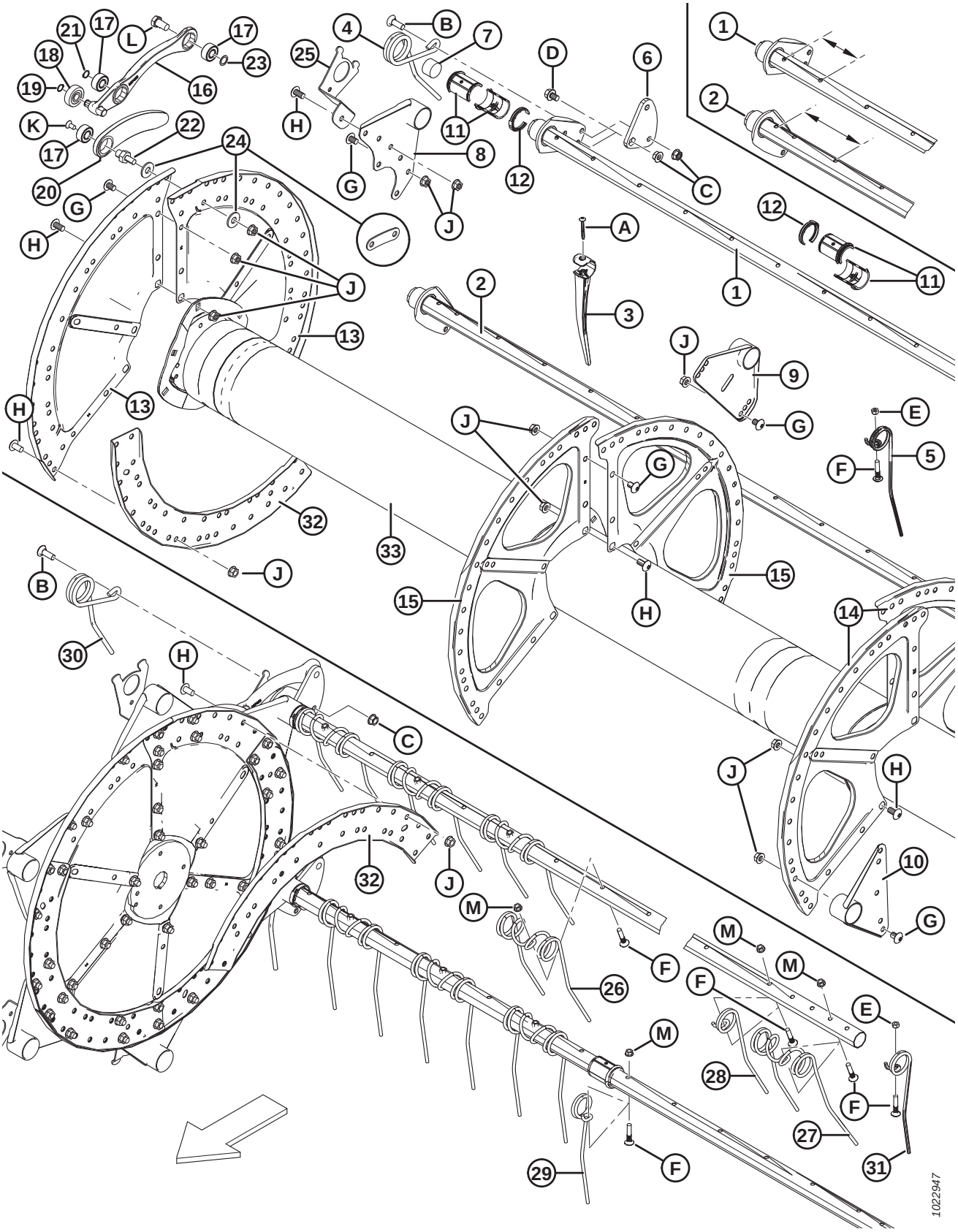

NOTE:

Illustration; TOP: Right-hand reel, BOTTOM: Left-hand reel.

IMPORTANT:

Quantities for narrow (#1) and wide (#2) stagger tine tubes vary.

- **4-inch finger spacing:** Narrow stagger (#1) = 159 mm. Wide stagger (#2) = 175 mm. See the illustration for measurement location.
- **6-inch finger spacing:** Narrow stagger (#1) = 120 mm / Wide stagger (#2) = 196 mm. See the illustration for measurement location.

Ref	Part Number	Description	Qty 5/6/9 Bat	Serial Number
	B5657	KIT – 30 FT DR TINE TUBE CONV, 6–9 BAT STEEL FINGERS, 6 IN. SPACING [96]		
	B5938	KIT – 30 FT DR TINE TUBE CONV, 5–6 BAT PLASTIC FINGERS, 6 IN. SPACING [96]		
	B5674	KIT – 35 FT DR TINE TUBE CONV, 5–6 BAT PLASTIC FINGERS, 6 IN. SPACING [96]		
	B6347	KIT – 30 FT DR TINE TUBE CONV, 6–9 BAT PLASTIC FINGERS, 4 IN. SPACING [96]		
	B6344	KIT – 30 FT DR TINE TUBE CONV, 5–6 BAT PLASTIC FINGERS, 4 IN. SPACING [96]		
	B6345	KIT – 35 FT DR TINE TUBE CONV, 5–6 BAT PLASTIC FINGERS, 4 IN. SPACING [96]		
		2018 AND LATER (4 IN. FINGER SPACING)		
1	255749	TINE TUBE – NARROW STAGGER (30 FT HEADER) [97]	6/6/10	321190–
	255716	TINE TUBE – NARROW STAGGER (35 FT HEADER) [98]	6/6/10	321190–
	255908	TINE TUBE – NARROW STAGGER (40 FT HEADER) [98]	6/6/0	321190–
	255738	TINE TUBE – NARROW STAGGER (45 FT HEADER) [99]	6/0/0	321190–
2	255746	TINE TUBE – WIDE STAGGER (30 FT HEADER) [97]	4/6/8	321190–
	255712	TINE TUBE – WIDE STAGGER (35 FT HEADER) [98]	4/6/8	321190–
	255905	TINE TUBE – WIDE STAGGER (40 FT HEADER) [98]	4/6/0	321190–
	255735	TINE TUBE – WIDE STAGGER (45 FT HEADER) [99]	4/0/0	321190–
		2017 AND PRIOR (6 IN. FINGER SPACING)		
1	137415	TINE TUBE – NARROW STAGGER (30 FT HEADER) [97]	6/6/10	–321189
	137570	TINE TUBE – NARROW STAGGER (35 FT HEADER) [100]	6/6/10	–321189
	245266	TINE TUBE – NARROW STAGGER (35 FT HEADER) [101]	6/6/10	–321189
	137568	TINE TUBE – NARROW STAGGER (40 FT HEADER) [102]	6/6/0	–321189
	253839	TINE TUBE – NARROW STAGGER (45 FT HEADER) [100]	6/0/0	–321189

96. Kits available through Whole Goods only.
97. 3 disc.
98. 3 or 4 disc / plastic finger.
99. 4 disc / plastic finger.
100. 3 disc / steel or plastic finger.
101. 4 disc / steel or plastic finger.
102. 3 or 4 disc / steel or plastic finger.

PICK-UP REEL – DOUBLE-REEL HEADERS (FD130, FD135, FD140, AND FD145)

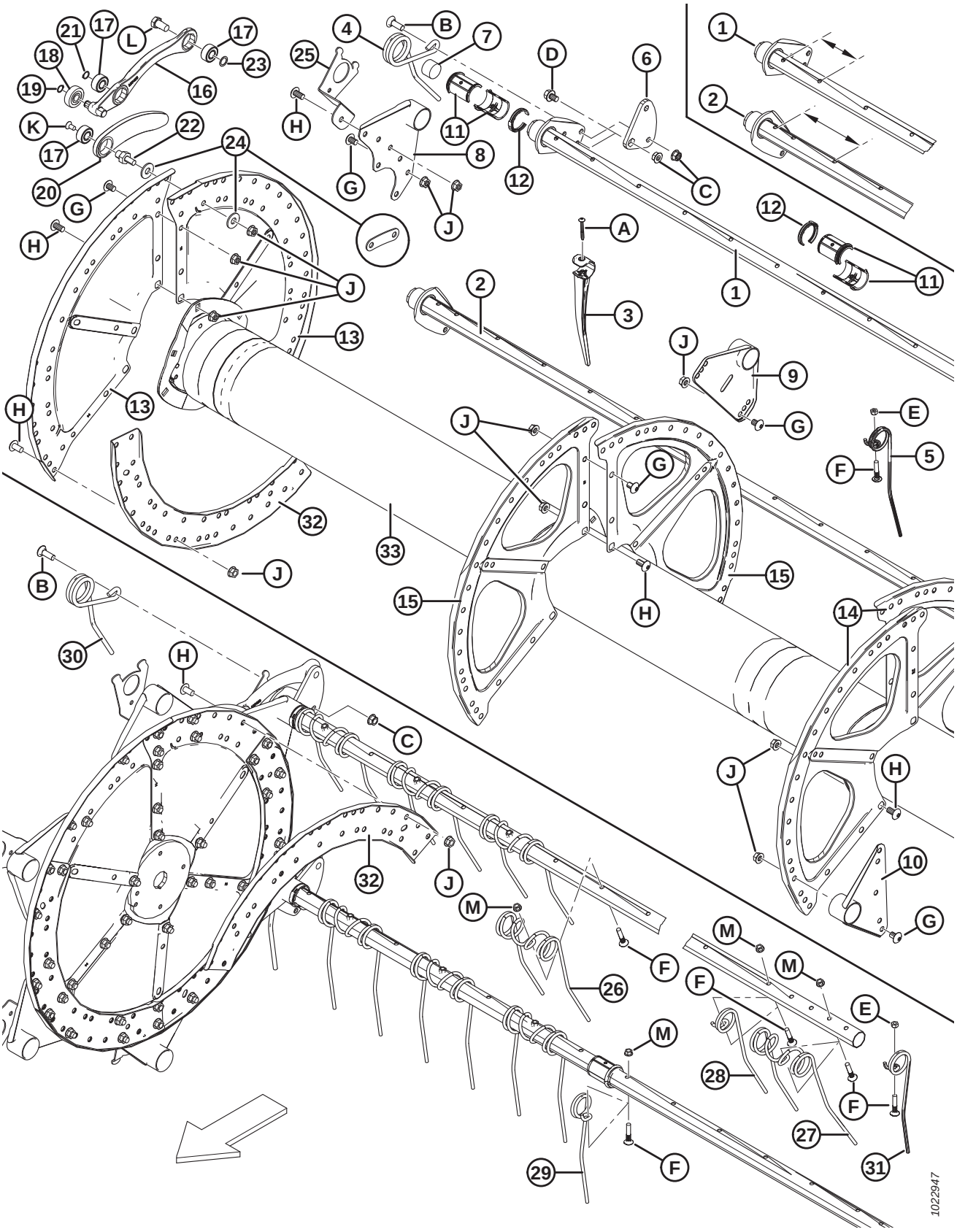

Ref	Part Number	Description	Qty 5/6/9 Bat	Serial Number
2	137416	TINE TUBE – WIDE STAGGER (30 FT HEADER) [97]	4/6/8	–321189
	137571	TINE TUBE – WIDE STAGGER (35 FT HEADER) [100]	4/6/8	–321189
	245267	TINE TUBE – WIDE STAGGER (35 FT HEADER) [101]	4/6/8	–321189
	137569	TINE TUBE – WIDE STAGGER (40 FT HEADER) [102]	4/6/0	–321189
	253503	TINE TUBE – WIDE STAGGER (45 FT HEADER) [100]	4/0/0	–321189
3	174849	FINGER – PLASTIC HEAVY DUTY (10 PACK) [103]		
4	245084	FINGER – CAM END (RH REEL)	5/6/9	
5	164894	FINGER – TAIL END (RH REEL) [104]		
6	137285	ARM – CRANK MACHINING	10/12/18	
7	137980	PLUG – TINE TUBE	20/24/36	
8	137506	ARM WELDT – CAM END	10/12/18	
9	137535	ARM WELDT [105]		
10	137543	ARM WELDT – TAIL END	10/12/18	
11	220939	BUSHING HALF – TINE TUBE (BOX OF 25)	60/72/108	
12	220941	CLAMP – TINE TUBE BUSH, CENTER RIB (5 PACK) [106]		
13	137536	SECTOR – CAM END, 14 GA	6/6/6	
14	137142	SECTOR – TAIL END, 16 GA	6/6/6	
15	137277	SECTOR – MID-SPAN, 18 GA	6/6/6	
16	311617	ARM – TINE CONTROL ASSEMBLY [107]	10/12/18	396190–
	304955	ARM – CAM CONTROL LINKAGE [108]	10/12/18	–396189
17	273347	BEARING	30/36/54	396190–
	273265	BEARING	30/36/54	–396189
18	273524	BEARING – CAM FOLLOWER	10/12/18	396190–
	50184	BEARING – CAM FOLLOWER	10/12/18	–396189

103. Quantities, 4-inch spacing (5/6/9 Bat): 30 ft. plastic = 428/562/820, 35 ft. plastic = 516/618/0, 40 ft. plastic = 606/0/0, 45 ft. plastic = 638/0/0.
Quantities, 6-inch spacing (5/6/9 Bat): 30 ft. plastic = 280/336/504, 35 ft. plastic = 332/399/598, 40 ft. plastic = 384/462/0, 45 ft. plastic = 433/0/0.
104. Quantities (5/6/9 Bat): 30–35 ft. steel and plastic = 5/6/9, 40 ft. steel and plastic = 5/6/0, 45 ft. plastic = 5/0/0.
105. Quantities (5/6/9 Bat): 30–35 ft. steel and plastic = 10/12/18, 40 ft. steel and plastic = 10/12/0, 45 ft. plastic = 10/0/0.
106. Quantities (5/6/9 Bat): 30 ft. steel and plastic = 15/18/27, 35 ft. steel and plastic = 15/17/27, 40 ft. steel and plastic = 15/18/0, 45 ft. plastic = 15/0/0.
107. Includes two bearings (MD #273347), cam follower bearing (MD #273524), and two retaining rings. For 2020 and prior machines, order cam control linkage arm (MD #304955).
108. Includes assembly arm (MD #311615), tine control assembly arm (MD #311617), link stud (MD #304954), and two retaining rings (MD #273536).

PICK-UP REEL – DOUBLE-REEL HEADERS (FD130, FD135, FD140, AND FD145)

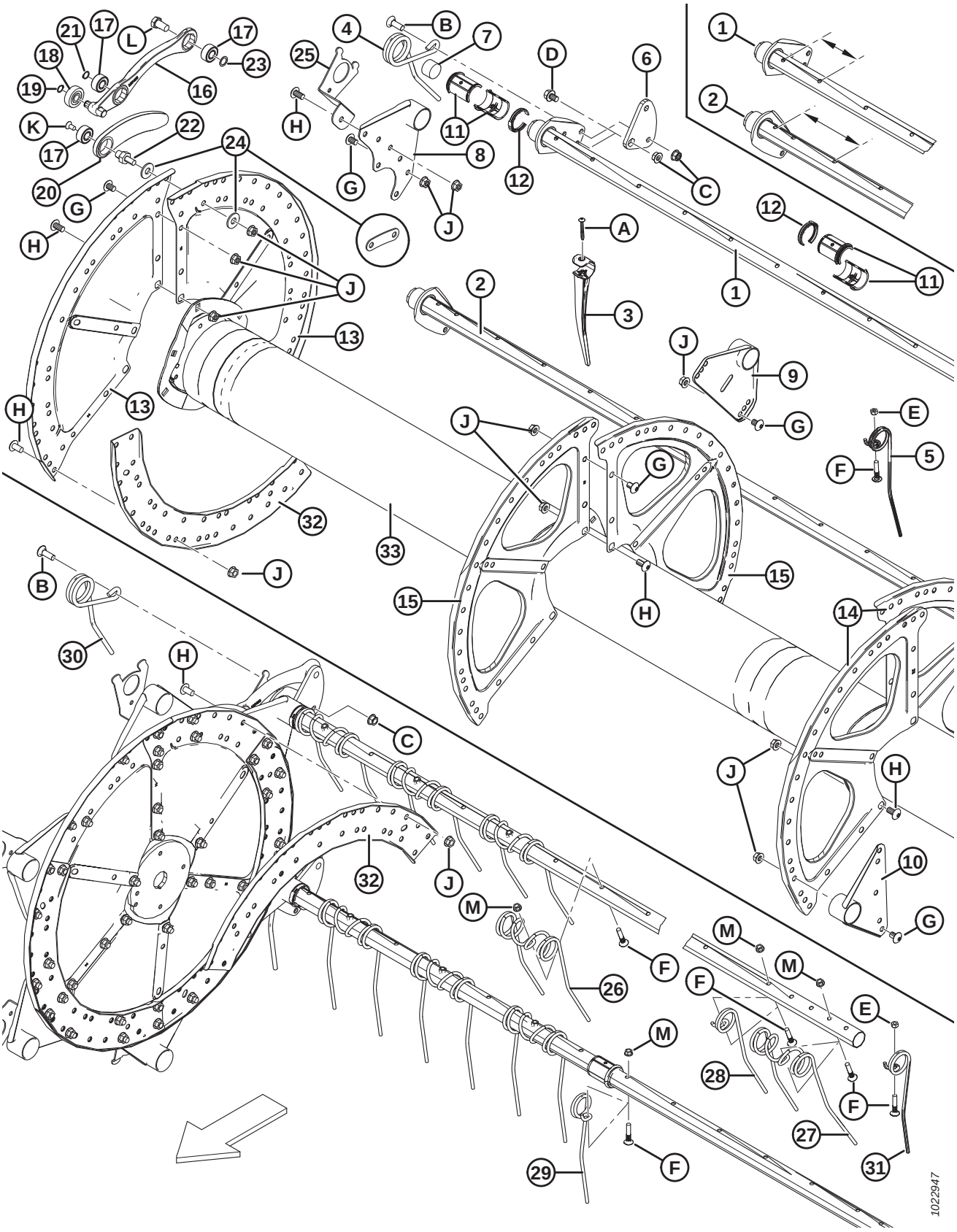

Ref	Part Number	Description	Qty 5/6/9 Bat	Serial Number
19	273536	RING – EXT RETAINING	10/12/18	396190–
	30523	RING – EXT RETAINING	10/12/18	–396189
20	311615	ARM – ASSEMBLY [109]	10/12/18	396190–
	304955	ARM – CAM CONTROL LINKAGE [108]	10/12/18	–396189
21	273536	RING – EXT RETAINING	10/12/18	396190–
	137523	RING – EXT RETAINING	10/12/18	–396189
22	304954	STUD – LINK	10/12/18	396190–
	279700	STUD – LINK (BOX OF 5)	10/12/18	–396189
23	137529	SHIM – CRANK BEARING	10/12/18	
24	137699	WASHER – USS HARD, FLAT 1/2 NOM. I.D. (5 BAT ONLY) [110]	20/0/0	244010–
	220025	STRAP – LINK PIN (5 BAT ONLY) [111]	20/0/0	–244009
25	REF	SUPPORT – ENDSHIELD REEL [112]		
26	137092	FINGER – DOUBLE, STEEL [113]		
27	137971	FINGER – DOUBLE, RH REEL TAIL END [114]		
28	137519	FINGER – SINGLE CONCENTRIC, LH OFFSET [115]		
29	137754	FINGER – SINGLE CONCENTRIC, RH OFFSET [116]		
30	164895	FINGER – CAM END (LH REEL)	5/6/9	
31	245083	FINGER – TAIL END (LH REEL) [117]		
32	137532	CHANNEL – CAM DISC [118]	6/6/6	

109. Includes bearing (MD #273347) and retaining ring (MD #273536). For 2020 and prior machines, order cam control linkage arm (MD #304955).
110. Service part for 5 bat units made in 2014 model year and later. For units made in 2013 model year and prior, order strap MD #220025.
111. Service part for 5 bat units made in 2013 model year and prior. For units made in 2014 model year and later, order washer MD #137699.
112. Refer to Section *26 Reel Endshield Components, page 77*.
113. Quantities (5/6/9 Bat): 30 ft. steel = 135/162/243, 35 ft. steel = 156/186/280, 40 ft. steel = 182/219/0.
114. Quantities: 30 ft. = 3, 35 ft. = 3. Used on steel fingered reels only.
115. Quantities (5/6/9 Bat): 30 ft. steel = 5/6/9, 35 ft. steel = 9/12/17, 40 ft. steel = 11/12/0.
116. Quantities (5/6/9 Bat): 30 ft. steel = 4/6/8, 35 ft. steel = 3/3/5, 40 ft. steel = 2/3/0.
117. Quantities (5/6/9 Bat): 30–35 ft. steel and plastic = 5/6/9, 40 ft. steel and plastic = 5/6/0, 45 ft. plastic = 5/0/0.
118. 2014 model year and later.

PICK-UP REEL – DOUBLE-REEL HEADERS (FD130, FD135, FD140, AND FD145)

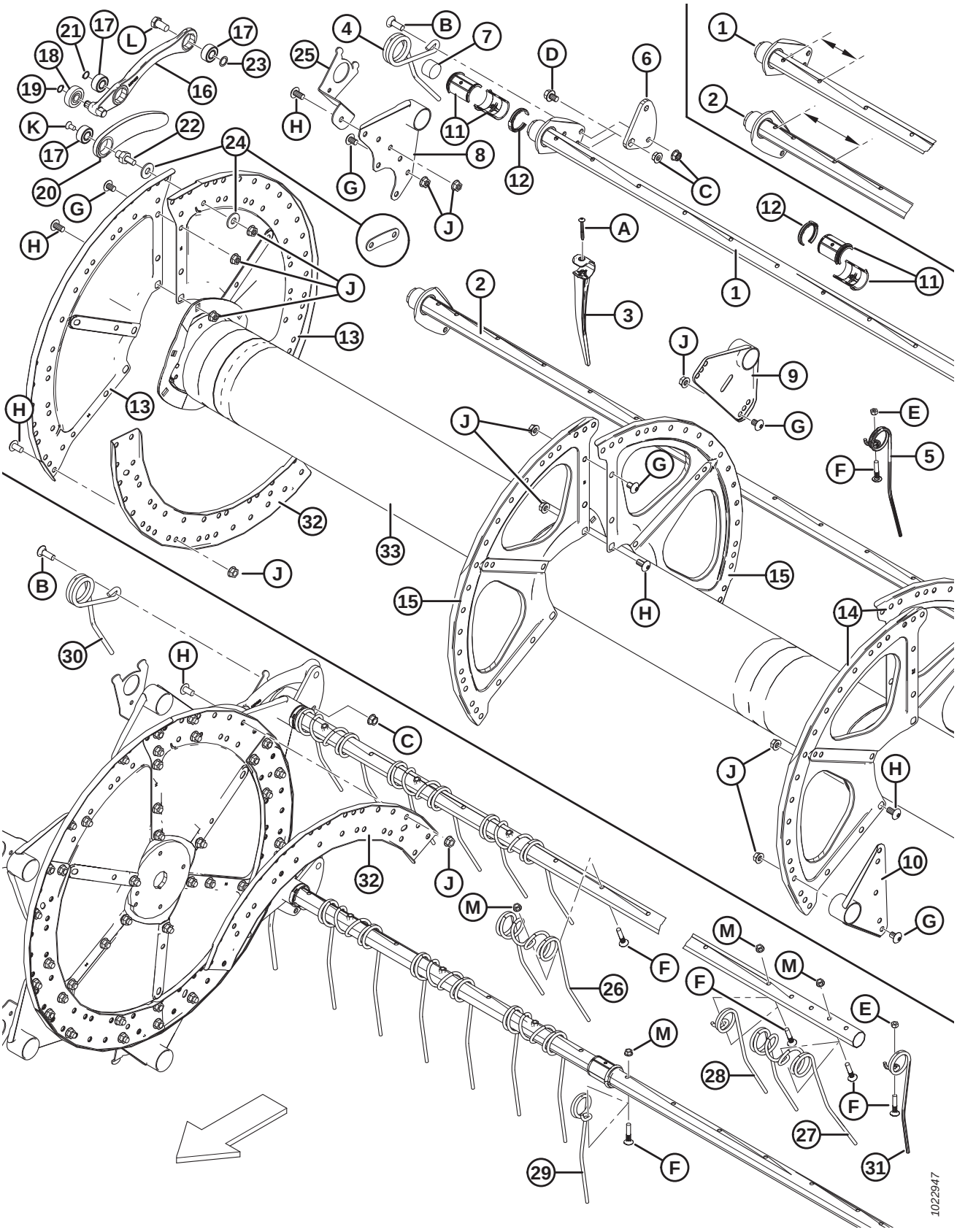

Ref	Part Number	Description	Qty 5/6/9 Bat	Serial Number
33	137910	CENTER TUBE – 30 FT LH, C/W REFLECTORS (3 DISC REEL) [119]	1	
	137913	CENTER TUBE – 30 FT RH, C/W REFLECTORS (3 DISC REEL) [119]	1	
	137915	CENTER TUBE – 35 FT LH, C/W REFLECTORS (3 DISC REEL) [119]	1	
	137916	CENTER TUBE – 35 FT RH, C/W REFLECTORS (3 DISC REEL) [119]	1	
	245272	CENTER TUBE – 35 FT LH, C/W REFLECTORS (4 DISC REEL) [120]	1	
	245273	CENTER TUBE – 35 FT RH, C/W REFLECTORS (4 DISC REEL) [120]	1	
	137917	CENTER TUBE – 40 FT LH, C/W REFLECTORS (3 DISC REEL) [119]	1	
	137918	CENTER TUBE – 40 FT RH, C/W REFLECTORS (3 DISC REEL) [119]	1	
	245276	CENTER TUBE – 40 FT LH, C/W REFLECTORS (4 DISC REEL) [120]	1	
	245277	CENTER TUBE – 40 FT RH, C/W REFLECTORS (4 DISC REEL) [120]	1	
	137968	CENTER TUBE – 45 FT LH, C/W REFLECTORS (3 DISC REEL) [119]	1	
	137969	CENTER TUBE – 45 FT RH, C/W REFLECTORS (3 DISC REEL) [119]	1	
	253514	CENTER TUBE – 45 FT LH, C/W REFLECTORS (4 DISC REEL) [120]	1	
	253515	CENTER TUBE – 45 FT RH, C/W REFLECTORS (4 DISC REEL) [120]	1	
A	252687	SCREW – SET, TORX, 48° DBL HELIX 1/4 X 2-1/4 ZP		
B	21469	BOLT – RHSN 1/2 NC X 1.5 LG GR 5 ZP		
C	21383	NUT – FLANGE .500-13 UNC (SER FACE)		
D	105066	BOLT – HH FLG (SER FACE) 1/2 -NC X 0.75 GR 5		
E	18669	NUT – HEX LOCK DT 3/8-16 UNC ZP		
F	137118	BOLT – BHRN 3/8 NC, C/W RETAINER		
G	105135	SCREW – MACH, TORX TRUSS HEAD, 1/2 X 0.75 IN. LG		
H	105136	SCREW – MACH, TORX TRUSS HEAD, 1/2 X 1.0 IN. LG		
J	50186	NUT – FLG LOCK SM FACE DT 0.500-13 UNC GR 5		
K	113420	BOLT – CSK TORX 3/8 NC X 3/4 LG [121]		–396189
L	105141	BOLT – SHOULDER, 5/8-18 UNF, 30 MM LG, ZP, GR 5		
M	30228	NUT – FLG DT SMOOTH FACE 0.375-16 UNC		

119. 3 disc.
120. 4 disc.
121. Model year 2021 and later machines use retaining ring MD #273536.

26 Reel Endshield Components

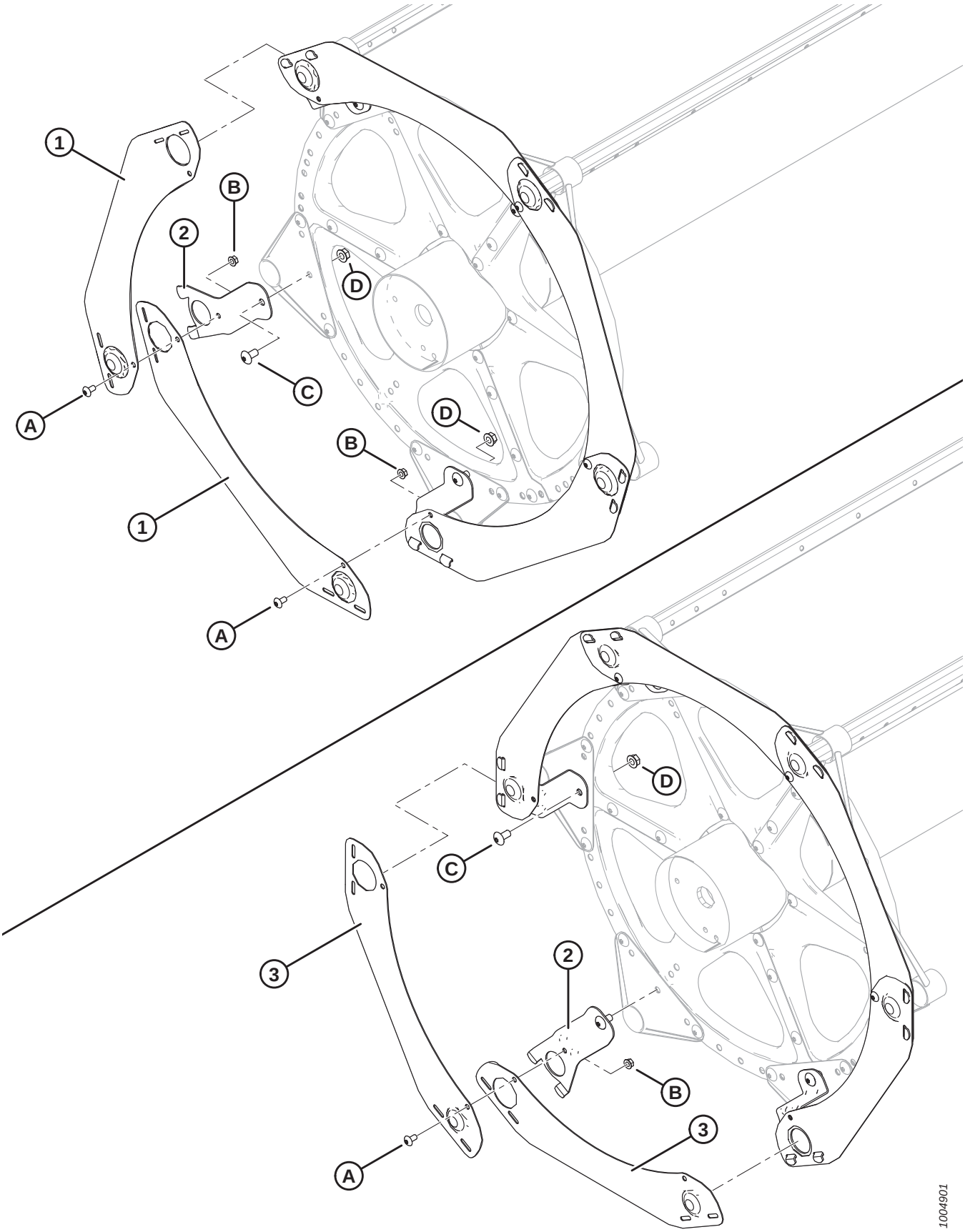

REEL ENDSHIELD COMPONENTS

Ref	Part Number	Description	Qty 5/6/9 Bat	Serial Number
1	164754	ENDSHIELD – 5-BAT SEGMENTED, 5-SERIES	5	
2	164958	SUPPORT – ENDSHIELD REEL	5/6/9	
3	164965	ENDSHIELD – 6-BAT SEGMENTED, 5-SERIES	6	
	164967	ENDSHIELD – 9-BAT SEGMENTED, 5-SERIES	9	
A	135157	SCREW – MACHINE, TORX TRUSS HD 3/8 X .75 IN.		
B	30228	NUT – FLG DT SMOOTH FACE 0.375-16 UNC		
C	105136	SCREW – MACHINE, TORX TRUSS HD 1/2 X 1.0 IN.		
D	50186	NUT – FLANGE LOCK SM FACE DT 0.500-13 UNC GR5		

27 Reel Components – Single Reel, Right Arm

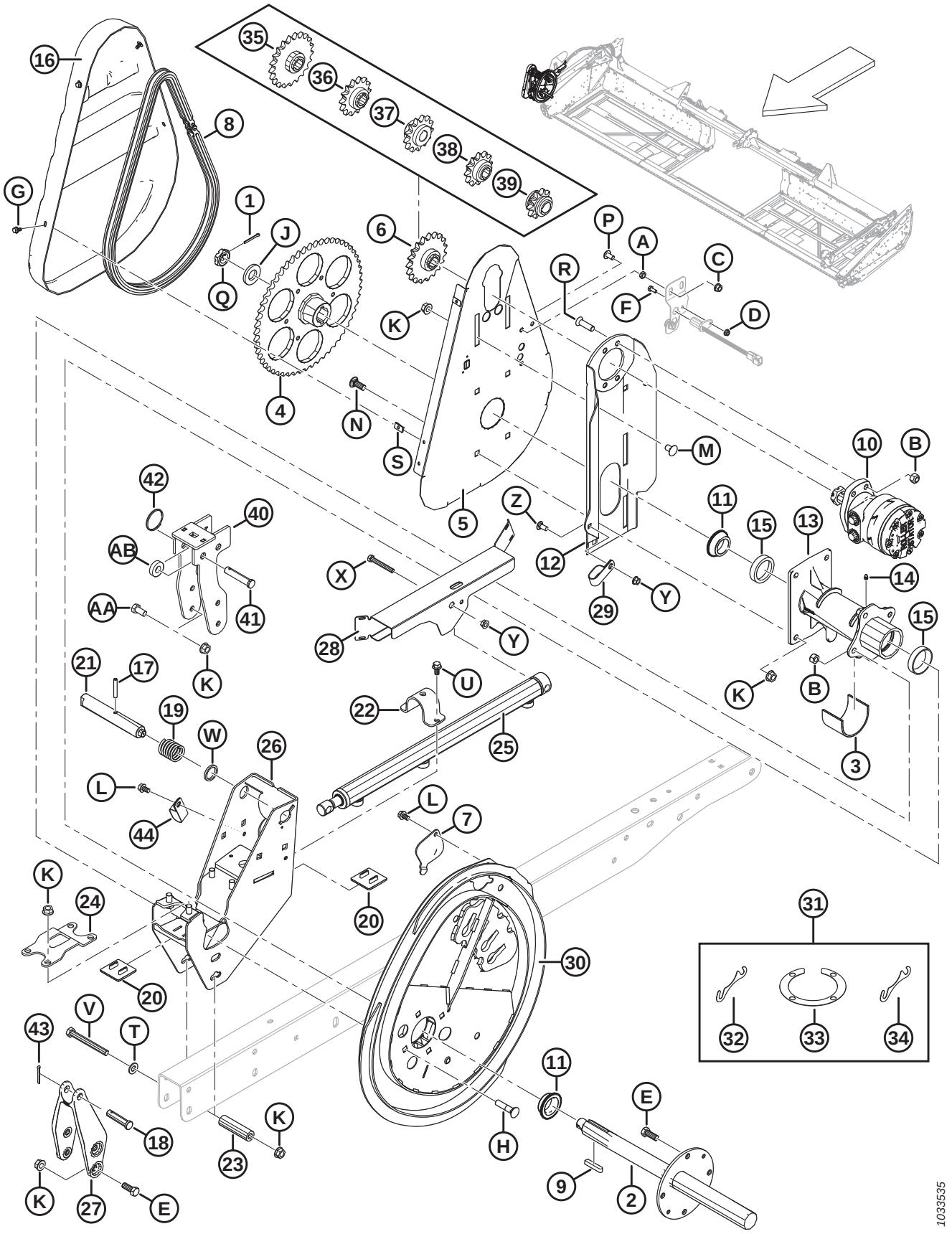

REEL COMPONENTS – SINGLE REEL, RIGHT ARM

Ref	Part Number	Description	Qty	Serial Number
1	18607	PIN – COTTER 5/32 DIA X 1.5 ZP	1	
2	137291	REEL DRIVE SHAFT	1	
3	137315	SLEEVE	1	
4	137347	SPROCKET – MACHINING 56 TOOTH, RC 60	1	
5	137352	SUPPORT – REEL DRIVE BACK PLATE	1	
6	137354	SPROCKET – RC 60, 19 TOOTH	1	
7	137476	COVER – CAM BEARING ACCESS	1	
8	137515	CHAIN – RC-60, 76 PITCHES RIVETED, ENDLESS	1	
9	137721	KEY – REEL DRIVE SHAFT	2	
10	273258	MOTOR – HYD, 15.9 CU.IN. 506 SERIES [122]	1	
	273259	SEAL KIT		
	137375	NUT – SLOTTED JAM 1.0-20 UNEF	OPT	
11	164213	BEARING – CONE C/W SEAL	2	
12	164750	MOTOR MOUNT WELDT	1	
13	164817	REEL DRIVE HUB C/W BEARING CUPS	1	
14	18671	FITTING – LUBE 1/4-28 UNF	1	
15	164214	BEARING – CUP	2	
16	164955	COVER – REEL DRIVE	1	
17	16681	PIN – SPRING 5/16 DIA X 2.0 LG	1	
18	18725	PIN – CLEVIS	1	
19	137221	SPRING – COMPRESSION	1	
20	137626	PAD – REEL DRIVE WEAR	2	
21	164815	PIN – CAM LATCH	1	
22	164930	CLAMP – FORE AFT	1	
23	164945	SPACER	1	
24	164953	CLAMP – DRIVE HUB	1	
25	164933	CYLINDER – FORE AFT	1	
	113435	SEAL KIT		
26	279979	SUPPORT WELDT – RH CAM	1	
27	164887	CASTING – FORE AFT RH ARM	1	
28	123670	SHIELD – RH SINGLE	1	
29	103738	CLAMP – PVC INSULATED 13/16 IN. TUBE SIZE	1	
30	294634	CAM KIT [123]	1	
31	294631	KIT – CAM SHIM [124]	A/R	
32	137753	SHIM RING – 4 BOLT FLANGE	A/R	
33	164061	SHIM – HUB TO CAM	A/R	
34	245199	SHIM – HUB TO CAM	A/R	
35	137350	SPROCKET – 21 TOOTH, RC 60 [125]	OPT	
36	137356	SPROCKET – 14 TOOTH 3000 PSI (DOWN RICE ONLY) [125]	OPT	
37	164126	SPROCKET – 13 TOOTH, RC 60 [125]	OPT	

122. Nut and key supplied with motor (MD #273258). Permissible to service nut with slotted jam nut (MD #137375).
123. Includes cam shim kit (MD #294631).
124. Includes four shims (MD #164061), two shim rings (MD #137753), and shim (MD #245199).
125. High-torque, steel-fingered reels only. Required on combines that have low reel drive pressure.

REEL COMPONENTS – SINGLE REEL, RIGHT ARM

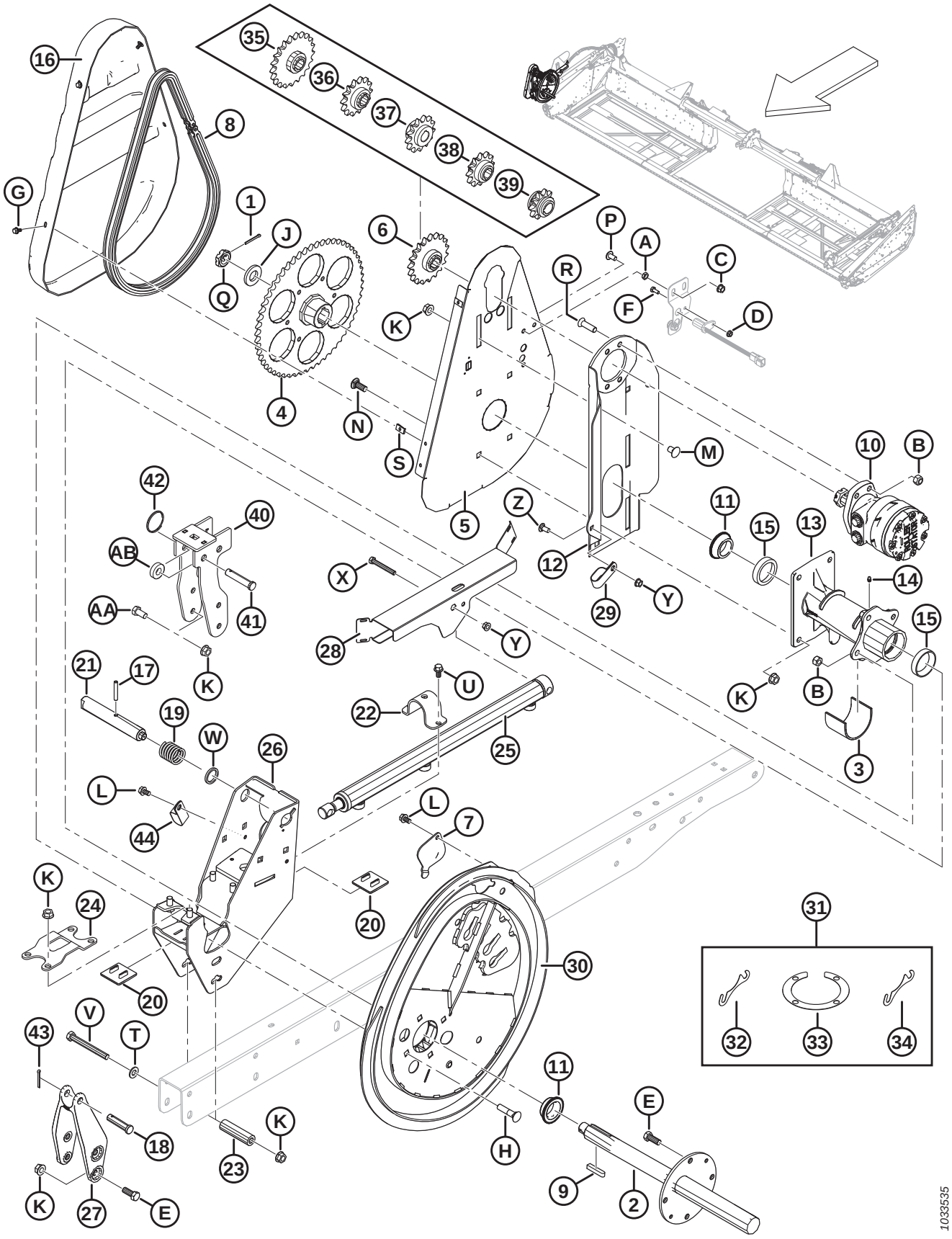

REEL COMPONENTS – SINGLE REEL, RIGHT ARM

Ref	Part Number	Description	Qty	Serial Number
38	137970	SPROCKET – 12 TOOTH 2500 PSI (DOWN RICE ONLY) [125]	OPT	
39	137348	SPROCKET – 10 TOOTH 2000 PSI (DOWN RICE ONLY) [125]	OPT	
40	304017	BRACKET – RHS CAM WELDT (EXPORT ONLY)	1	
41	18738	PIN – CLEVIS (EXPORT ONLY)	1	
42	118137	RING (EXPORT ONLY)	1	
43	18648	PIN – COTTER 3/16 DIA X 1.25 ZP	1	
44	50022	CLAMP – INSULATED 15/16 INCH	1	
A	18664	NUT – HEX JAM 3/8-16 UNC GR 5 ZP		
B	18697	NUT – HEX LOCK DT .500-13 UNC		
C	21452	NUT – FLANGE (SER FACE) .375-16 UNC		
D	21455	NUT – FLG (SER FACE) 1/4 NC GR 5 ZP		
E	21491	BOLT – HH 1/2 NC X 1.25 LG GR 5 ZP		
F	21572	BOLT – HEX HD 1/4 NC X 1.25 LG GR 5 ZP		
G	21968	BOLT – HH FLG (SER FACE) 1/4 NC X 0.5 GR 5 ZP		
H	30027	BOLT – RHSN 1/2 NC X 2.25 LG GR 5 ZP		
J	31774	WASHER – FLAT		
K	50186	NUT – FLANGE LOCK SM FACE DT 0.500-13 UNC GR 5		
L	101898	SCREW – HEX WASH HD THD ROLLING 3/8 NC X 5/8		
M	105069	BOLT – RHSSN 1/2 NC X 0.75 GR 5 ZP		
N	114233	BOLT – RHSSN 1/2 NC X 1.25 GR 5 ZP		
P	135157	SCREW – MACHINE		
Q	137375	NUT – SLOTTED JAM 1.0 IN-20 UNEF-ZN PL		
R	137503	BOLT – CSK SOCK. 1/2 NC X 1.75 GR. 5 ZP		
S	137702	NUT – 1/4-20 SHEET METAL		
T	18599	WASHER – SAE FLAT 17/32 I.D. X 1-1/16 IN. O.D. ZP		
U	21821	BOLT – HH FLG (SER FACE) 3/8 NC X 0.75 GR 5 ZP		
V	30209	BOLT – HH 1/2 NC X 4.5 LG GR 5 ZP		
W	273304	WASHER – CAM LATCH		
X	30035	BOLT – HH 3/8 NC X 2.75 LG GR 5 ZP		
Y	30228	NUT – FLANGE DT SMOOTH FACE 0.375-16 UNC		
Z	21863	BOLT – RHSSN 3/8 NC X 0.75 LG GR 5 ZP		
AA	21575	BOLT – HH 1/2 NC X 1.0 LG GR 5 ZP		
AB	40915	WASHER – FLAT		

28 Reel Components – Double Reel, Right Arm

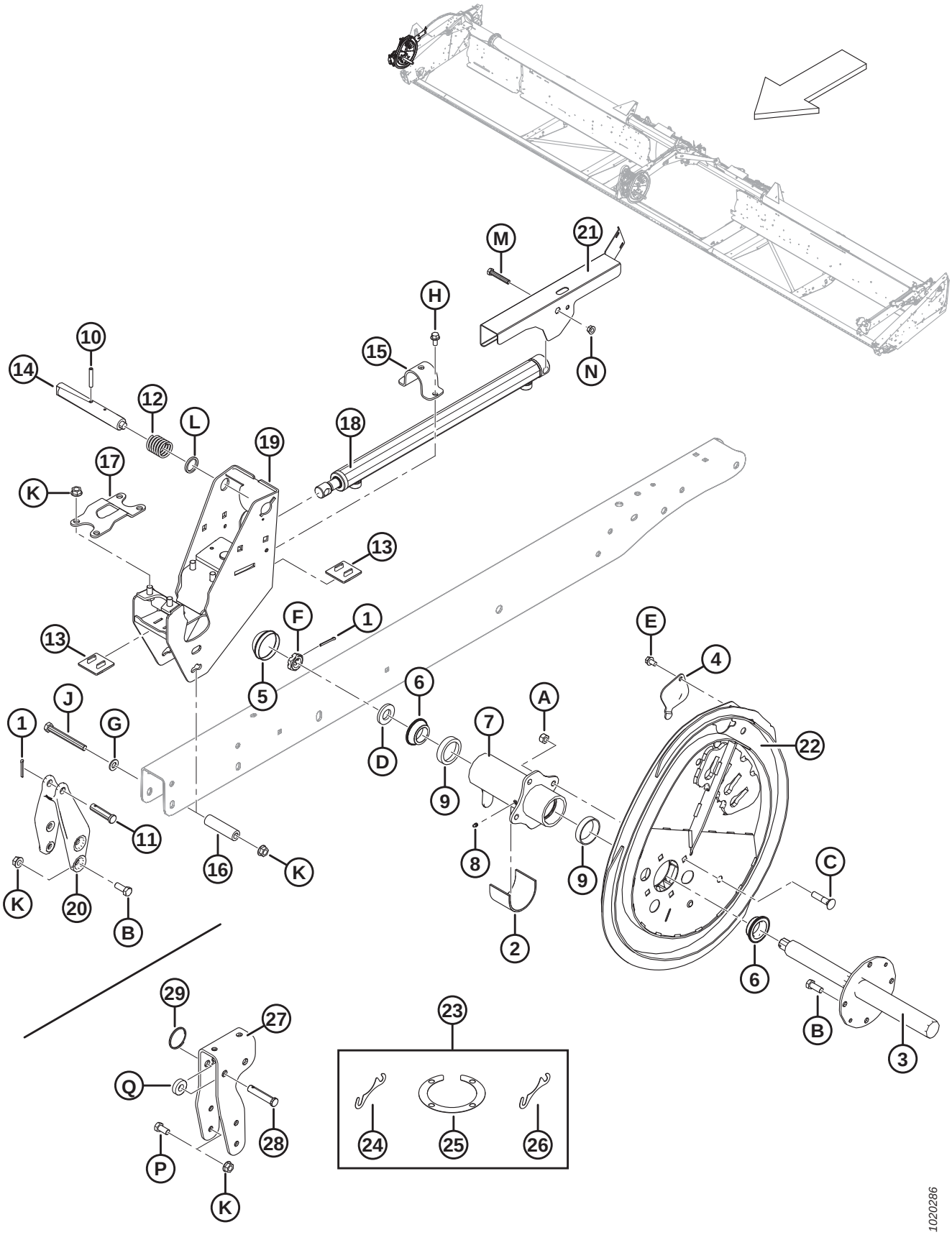

REEL COMPONENTS – DOUBLE REEL, RIGHT ARM

Ref	Part Number	Description	Qty	Serial Number
1	18648	PIN – COTTER 3/16 DIA X 1.25 ZP	2	
2	137315	SLEEVE	1	
3	137451	REEL DRIVE SHAFT RH	1	
4	137476	COVER – CAM BEARING ACCESS	1	
5	140250	CAP – DUST	1	
6	164213	BEARING – CONE C/W SEAL	2	
7	164821	HUB – RH REEL C/W CUPS	1	
8	18671	FITTING – LUBE 1/4-28 UNF	1	
9	164214	BEARING – CUP	2	
10	16681	PIN – SPRING 5/16 DIA X 2.0 LG	1	
11	18725	PIN – CLEVIS	1	
12	137221	SPRING – COMPRESSION	1	
13	137626	PAD – REEL DRIVE WEAR	2	
14	137456	PIN – CAM LATCH	1	
15	164930	CLAMP – FORE AFT	1	
16	164945	SPACER	1	
17	164953	CLAMP – DRIVE HUB	1	
18	164933	CYLINDER – FORE AFT	1	
	113435	SEAL KIT		
19	279979	SUPPORT WELDT – RH CAM	1	
20	164887	CASTING – FORE AFT RH ARM	1	
21	123627	SHIELD – RH DUAL (RH ARM ON RH REEL)	1	
22	294634	CAM KIT [126]	1	
23	294631	KIT – CAM SHIM [127]	A/R	
24	164061	SHIM – HUB TO CAM (1.2 MM)	A/R	
25	137753	SHIM RING – 4 BOLT FLANGE	A/R	
26	245199	SHIM – HUB TO CAM (0.6 MM)	A/R	
27	304017	BRACKET – RHS CAM BRKT FLANGE (EXPORT ONLY)	1	
28	18624	PIN – CLEVIS (EXPORT ONLY)	1	
29	118137	RING (EXPORT ONLY)	1	
A	18697	NUT – HEX LOCK DT .500-13 UNC		
B	21491	BOLT – HH 1/2 NC X 1.25 LG GR 5 ZP		
C	30027	BOLT – RHSN 1/2 NC X 2.25 LG GR 5 ZP		
D	31774	WASHER – FLAT		
E	101898	SCREW – HEX WASH HD THD ROLLING 3/8 NC X 5/8		
F	137375	NUT – SLOTTED JAM 1.0 IN.-20 UNEF-ZN PL		
G	18599	WASHER – SAE FLAT 17/32 I.D. X 1-1/16 IN. O.D. ZP		
H	21821	BOLT – HH FLG (SER FACE) 3/8 NC X 0.75 GR 5 ZP		
J	30209	BOLT – HH 1/2 NC X 4.5 LG GR 5 ZP		
K	50186	NUT – FLANGE LOCK SM FACE DT 0.500-13 UNC GR 5		

126. Includes cam shim kit (MD #294631).
127. Includes four shims (MD #164061), two shim rings (MD #137753), and shim (MD #245199).

REEL COMPONENTS – DOUBLE REEL, RIGHT ARM

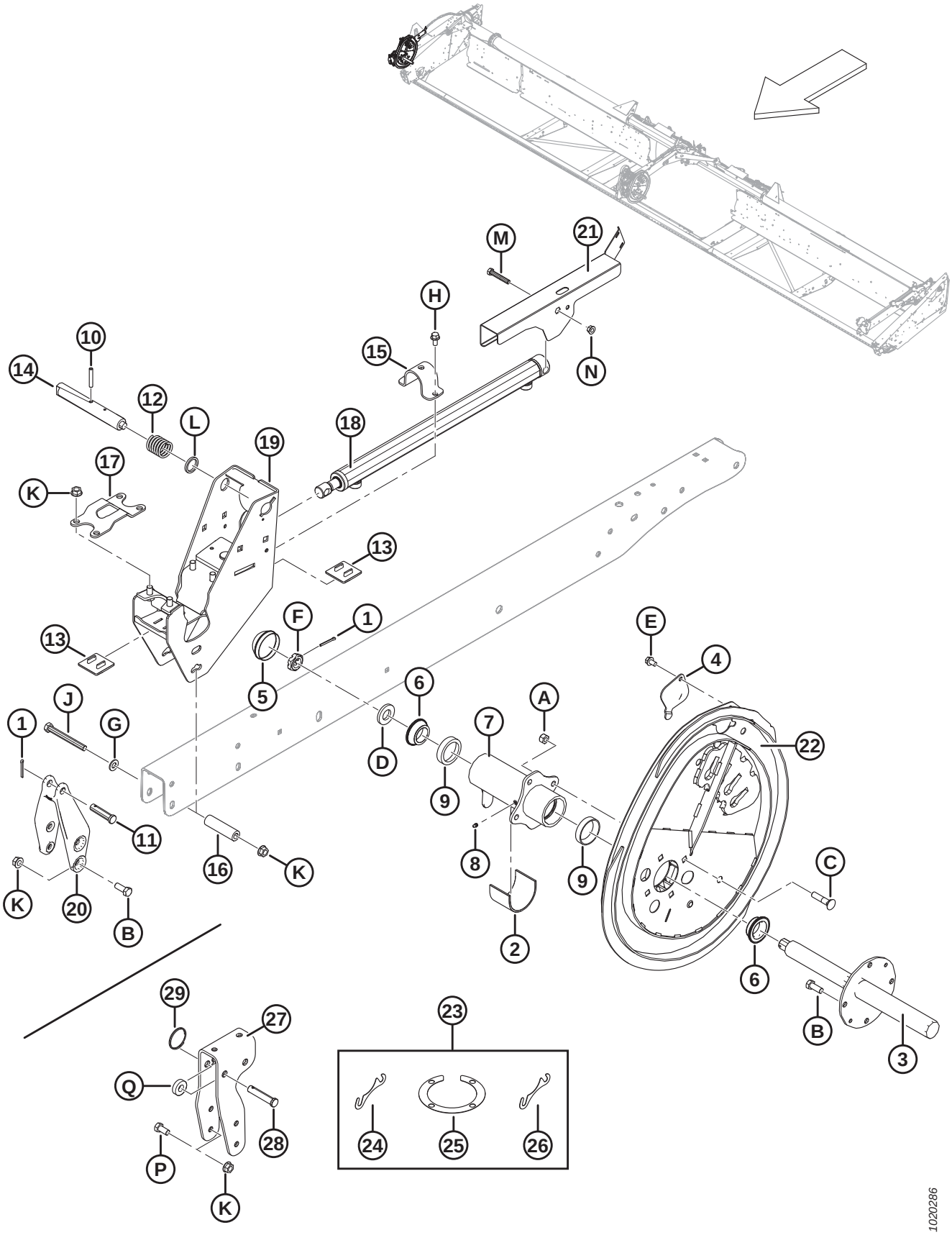

REEL COMPONENTS – DOUBLE REEL, RIGHT ARM

Ref	Part Number	Description	Qty	Serial Number
L	273304	WASHER – CAM LATCH		
M	20055	BOLT – HH 3/8 NC X 2.25 LG GR 5 ZP		
N	30228	NUT – FLANGE DT SMOOTH FACE 0.375-16 UNC		
P	21575	BOLT – HH 1/2 NC X 1.0 LG GR 5 ZP		
Q	40915	WASHER – FLAT		

29 Reel Components – Double Reel, Center Arm

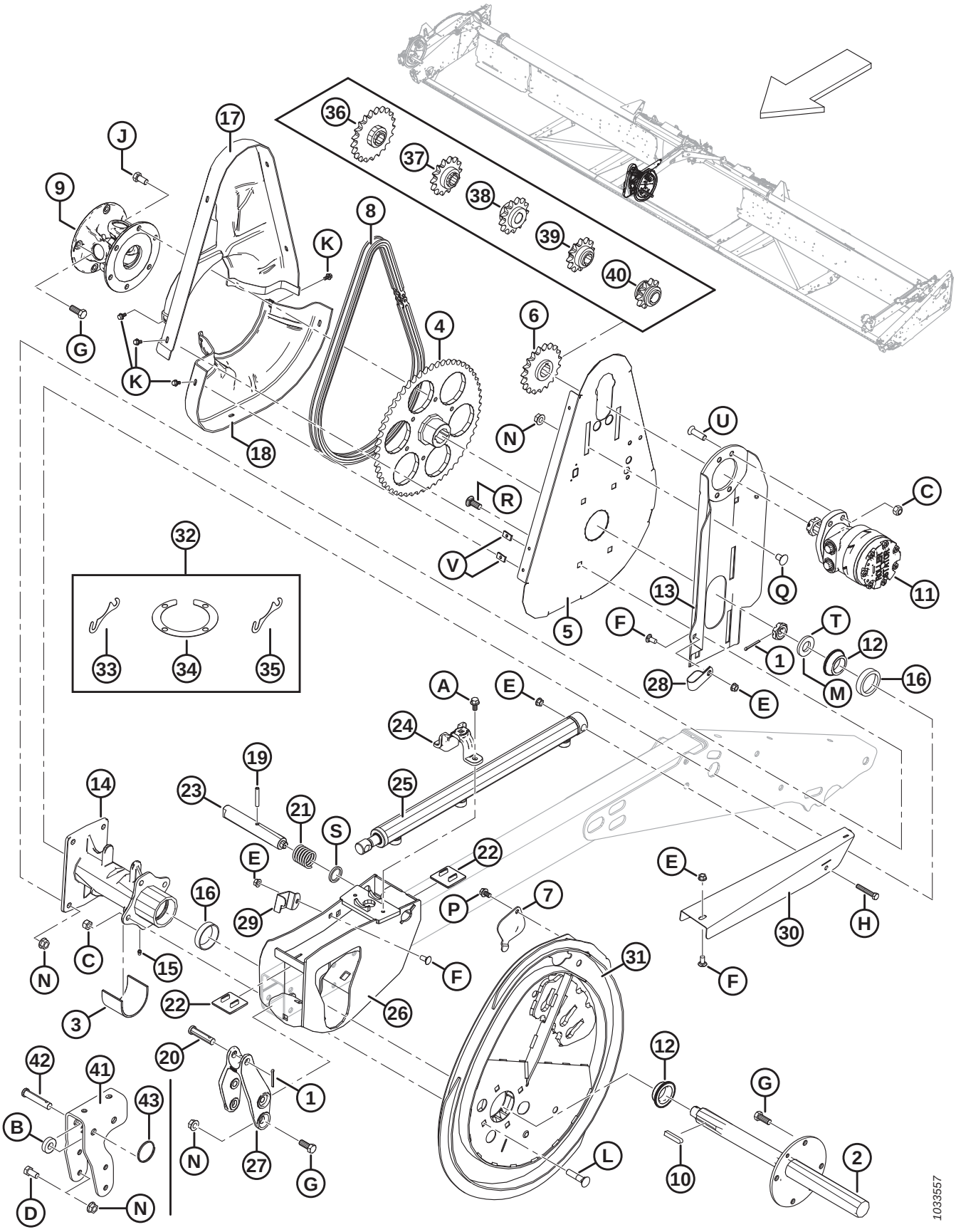

REEL COMPONENTS – DOUBLE REEL, CENTER ARM

Ref	Part Number	Description	Qty	Serial Number
1	18648	PIN – COTTER 3/16 DIA X 1.25 ZP	2	
2	137291	REEL DRIVE SHAFT	1	
3	137315	SLEEVE	1	
4	137347	SPROCKET – MACHINING 56 TOOTH, RC 60	1	
	164141	SPROCKET – MACHINING 48 TOOTH, RC 60 [128]	1	
5	137352	SUPPORT – REEL DRIVE BACK PLATE	1	
6	137354	SPROCKET – RC 60 19 TOOTH	1	
7	137476	COVER – CAM BEARING ACCESS	1	
8	137515	CHAIN – RC-60, 76 PITCHES RIVETED, ENDLESS	1	
	164109	CHAIN – RC-60, 70 PITCHES RIVETED, ENDLESS [128]	1	
9	137691	REEL DRIVE U JOINT	1	
	137825	CROSS JOURNAL ASSEMBLY		
	137826	YOKE – FLANGE, 4 BOLT		
	137827	YOKE – FLANGE, 6 BOLT		
10	137721	KEY – REEL DRIVE SHAFT	2	
11	273258	MOTOR – HYD, 15.9 CU.IN. 506 SERIES	1	
	273259	SEAL KIT [129]		
	273078	MOTOR – HYD, 260 CC HIGH CAP BRG [130]	OPT	
	311620	SEAL KIT [131]		
	137375	NUT – SLOTTED JAM 1.0-20 UNEF	OPT	
12	164213	BEARING – CONE C/W SEAL	2	
13	164750	MOTOR MOUNT WELDT	1	
14	164817	REEL DRIVE HUB – C/W BEARING CUPS	1	
15	18671	FITTING – LUBE 1/4-28 UNF	1	
16	164214	BEARING – CUP	2	
17	164947	SHIELD – REEL DRIVE TOP HALF	1	
18	164948	SHIELD – LOWER DUAL REEL DRIVE	1	
19	16681	PIN – SPRING 5/16 DIA X 2.0 LG	1	
20	18725	PIN – CLEVIS	1	
21	137221	SPRING – COMPRESSION	1	
22	137626	PAD – REEL DRIVE WEAR	2	
23	164815	PIN – CAM LATCH	1	
24	304956	CASTING – CLAMP FORE AFT CYLINDER	1	

128. Non-European configured double-reel, high-torque, high-speed reels only.
129. For standard-torque motor (MD #273258).
130. Optional motor for high-torque applications.
131. For high-torque motor (MD #273078).

REEL COMPONENTS – DOUBLE REEL, CENTER ARM

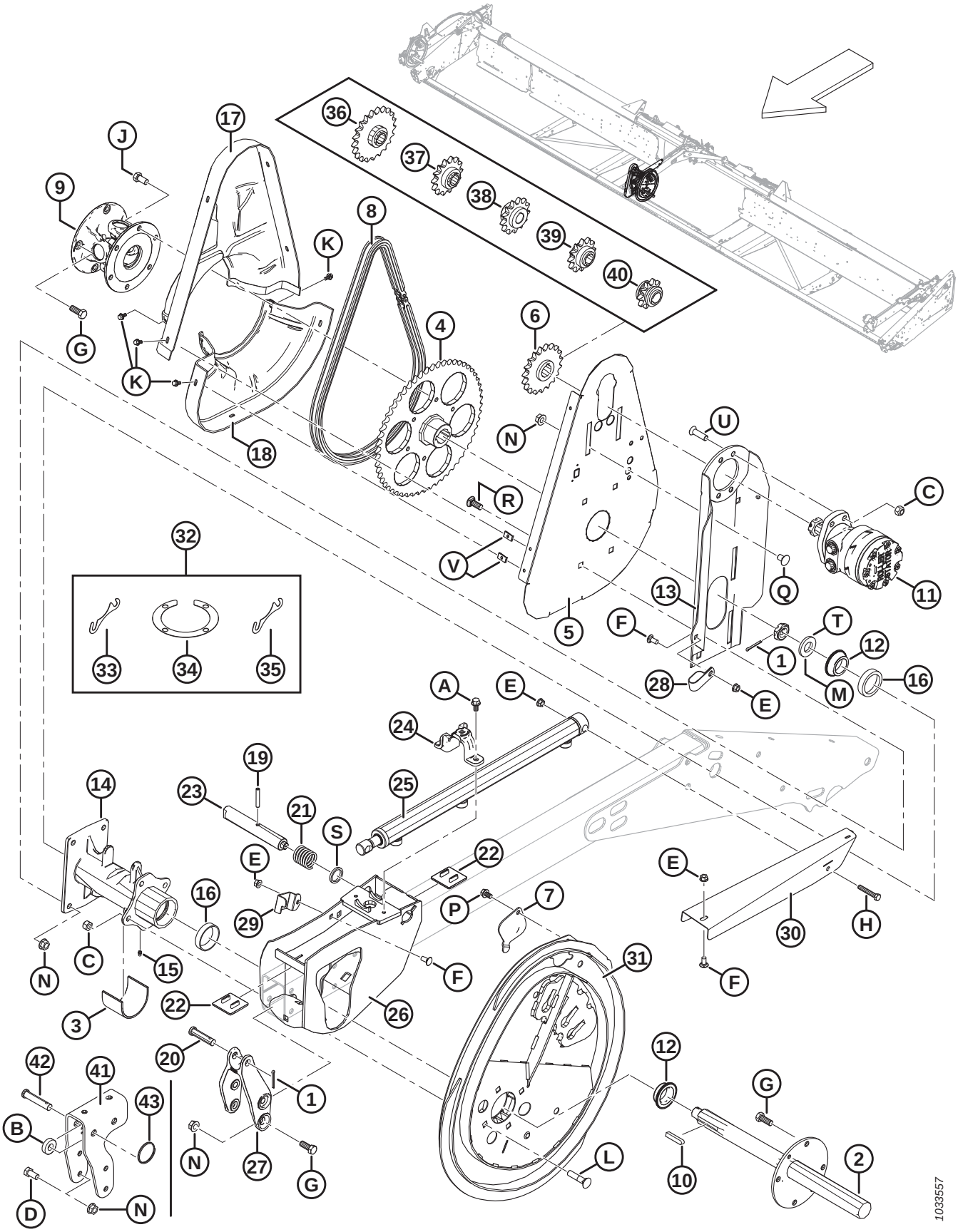

REEL COMPONENTS – DOUBLE REEL, CENTER ARM

Ref	Part Number	Description	Qty	Serial Number
25	164933	CYLINDER – FORE AFT	1	
	113435	SEAL KIT		
26	253092	SUPPORT WELDT – DR DRIVE	1	
27	164885	CASTING – FORE AFT CENTER ARM	1	
28	103738	CLAMP – PVC INSULATED 13/16 IN. TUBE SIZE	1	
29	164858	RETAINER – HOSE	1	
30	294065	SHIELD – FORE AFT HOSES DUAL REEL DRIVE	1	
31	294634	CAM KIT [132]	1	
32	294631	KIT – CAM SHIM [133]	A/R	
33	164061	SHIM – HUB TO CAM (1.2 MM)	A/R	
34	137753	SHIM RING – 4 BOLT FLANGE	A/R	
35	245199	SHIM – HUB TO CAM (0.6 MM)	A/R	
36	137350	SPROCKET – 21 TOOTH, RC 60 [134]	OPT	
37	137356	SPROCKET – 14 TOOTH, 3000 SPI (DOWN RICE ONLY) [134]	OPT	
38	164126	SPROCKET – 13 TOOTH, RC 60 [134]	OPT	
39	137970	SPROCKET – 12 TOOTH, 2500 PSI (DOWN RICE ONLY) [134]	OPT	
40	137348	SPROCKET – 10 TOOTH, 2000 PSI (DOWN RICE ONLY) [134]	OPT	
41	304018	BRACKET – CTR CAM BRKT FLANGE (EXPORT ONLY)	1	
42	18624	PIN – CLEVIS (EXPORT ONLY)	1	
43	118137	RING (EXPORT ONLY)	1	
A	21821	BOLT – HH FLG (SER FACE) 3/8 NC X 0.75 GR 5 ZP		
B	40915	WASHER – FLAT		
C	18697	NUT – HEX LOCK DT .500-13 UNC		
D	21575	BOLT – HH 1/2 NC X 1.0 LG GR 5 ZP		
E	30228	NUT – FLANGE DT SMOOTH FACE 0.375-16 UNC		
F	21863	BOLT – RHSSN 3/8 NC X 0.75 LG GR 5 ZP		
G	21491	BOLT – HH 1/2 NC X 1.25 LG GR 5 ZP		
H	20055	BOLT – HH 3/8 NC X 2.25 LG GR 5 ZP		
J	21575	BOLT – HH 1/2 NC X 1.0 LG GR 5 ZP		
K	21968	BOLT – HH FLG (SER FACE) 1/4 NC X 0.5 GR 5 ZP		
L	30027	BOLT – RHSN 1/2 NC X 2.25 LG GR 5 ZP		
M	31774	WASHER – FLAT		
N	50186	NUT – FLANGE LOCK SM FACE DT 0.500-13 UNC GR 5		
P	101898	SCREW – HEX WASH HD THD ROLLING 3/8 NC X 5/8		
Q	105069	BOLT – RHSSN 1/2 NC X 0.75 GR 5 ZP		
R	114233	BOLT – RHSSN 1/2 NC X 1.25 GR 5 ZP		
S	273304	WASHER – CAM LATCH		
T	137375	NUT – SLOTTED JAM 1.0 IN-20 UNEF-ZN PL		

132. Includes cam shim kit (MD #294631).
133. Includes four shims (MD #164061), two shim rings (MD #137753), and shim (MD #245199).
134. High-torque, steel-fingered reels only. Required on combines that have low reel drive pressure.

REEL COMPONENTS – DOUBLE REEL, CENTER ARM

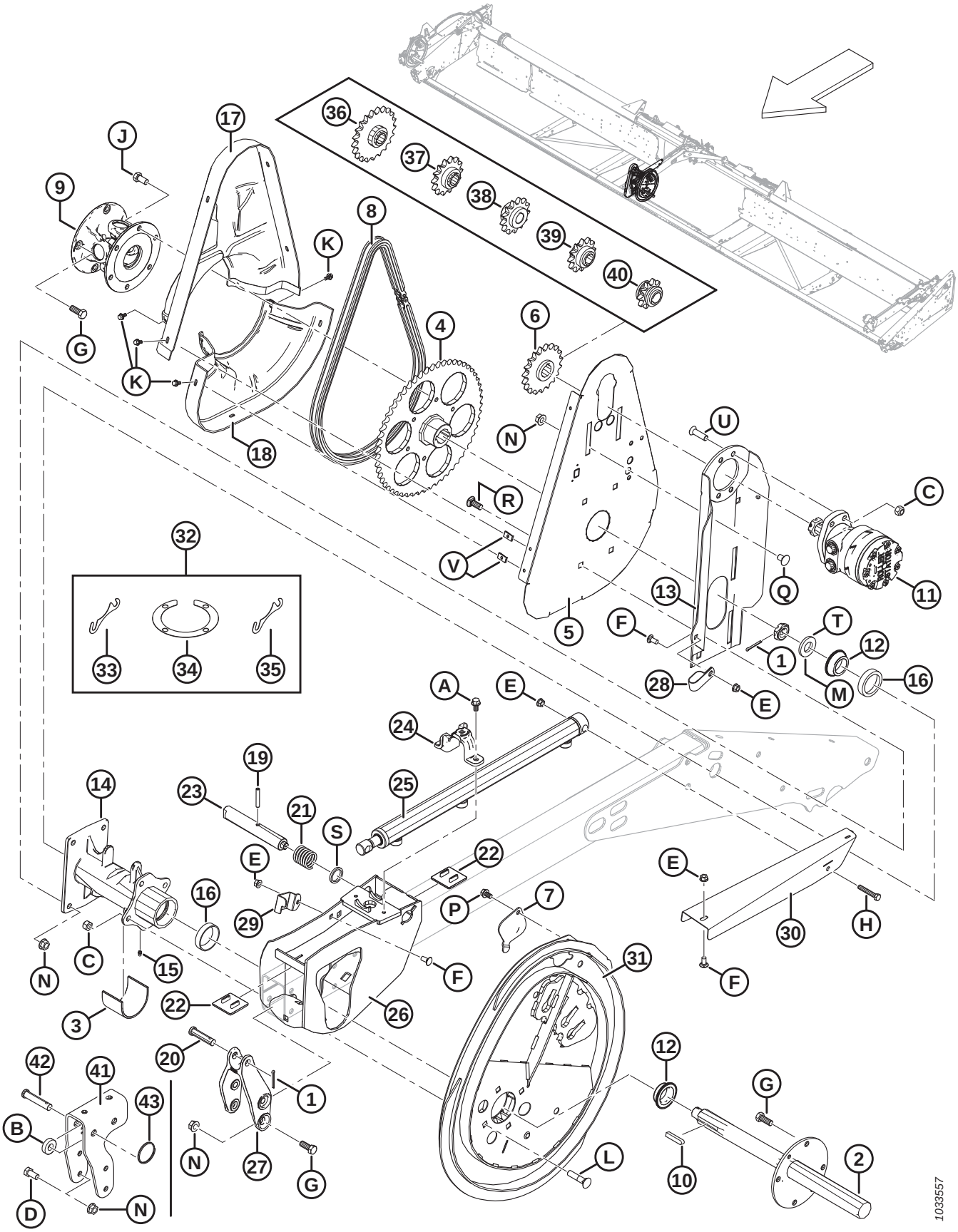

REEL COMPONENTS – DOUBLE REEL, CENTER ARM

Ref	Part Number	Description	Qty	Serial Number
U	137503	BOLT – CSK SOCK. 1/2 NC X 1.75 GR. 5 ZP		
V	137702	NUT – 1/4-20 SHEET METAL		

30 Reel Components – Single/Double Reel, Left Arm

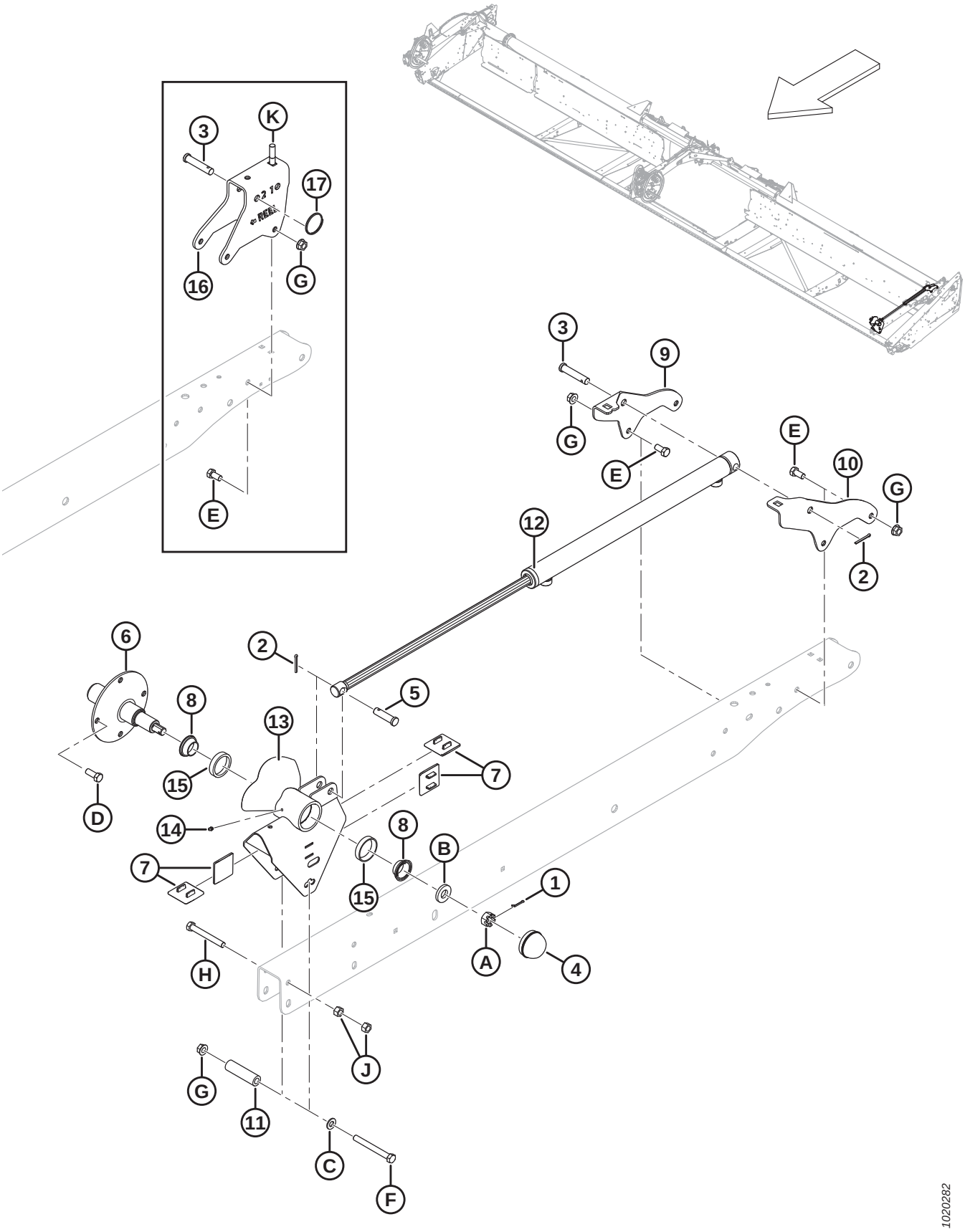

REEL COMPONENTS – SINGLE/DOUBLE REEL, LEFT ARM

Ref	Part Number	Description	Qty	Serial Number
1	18605	PIN – COTTER 1/8 DIA X 1 ZP	1	
2	18648	PIN – COTTER 3/16 DIA X 1.25 ZP	2	
3	18738	PIN – CLEVIS	1	
4	30520	CAP – DUST	1	
5	103879	PIN – CLEVIS	1	
6	105364	SHAFT – TAIL END	1	
7	137626	PAD – REEL DRIVE WEAR	4	
8	164216	BEARING – CONE C/W SEAL	2	
9	164780	SUPPORT – FORE/AFT LH ARM, INBOARD SIDE	1	
10	164781	SUPPORT – FORE/AFT LH ARM, OUTBOARD SIDE	1	
11	164945	SPACER	1	
12	164934	CYLINDER – FORE AFT	1	
	113435	SEAL KIT		
13	253290	SUPPORT – TAIL C/W CUPS	1	
14	18671	FITTING – LUBE 1/4-28 UNF	1	
15	164215	BEARING – CUP ROLLER	2	
16	304019	BRACKET – LHS TAIL SUPPORT (EXPORT ONLY)	1	
17	118137	RING (EXPORT ONLY)	1	
A	5512	NUT – HEX SLOTTED .750-16 UNF ZN PL		
B	16235	WASHER – FLAT		
C	18599	WASHER – SAE FLAT 17/32 I.D. X 1-1/16 IN. O.D. ZP		
D	21491	BOLT – HH 1/2 NC X 1.25 LG GR 5 ZP		
E	21575	BOLT – HH 1/2 NC X 1.0 LG GR 5 ZP		
F	30209	BOLT – HH 1/2 NC X 4.5 LG GR 5 ZP		
G	50186	NUT – FLANGE LOCK SM FACE DT 0.500-13 UNC GR 5		
H	21589	BOLT – HH 1/2 NC X 4.0 LG GR 5 ZP		
J	18591	NUT – HEX 1/2-13 UNC GR 5 ZP		
K	30027	BOLT – RHSN 1/2 NC X 2.25 LG GR 5 ZP		

31 Reel Support Arms and Lift Cylinders – Center Arm

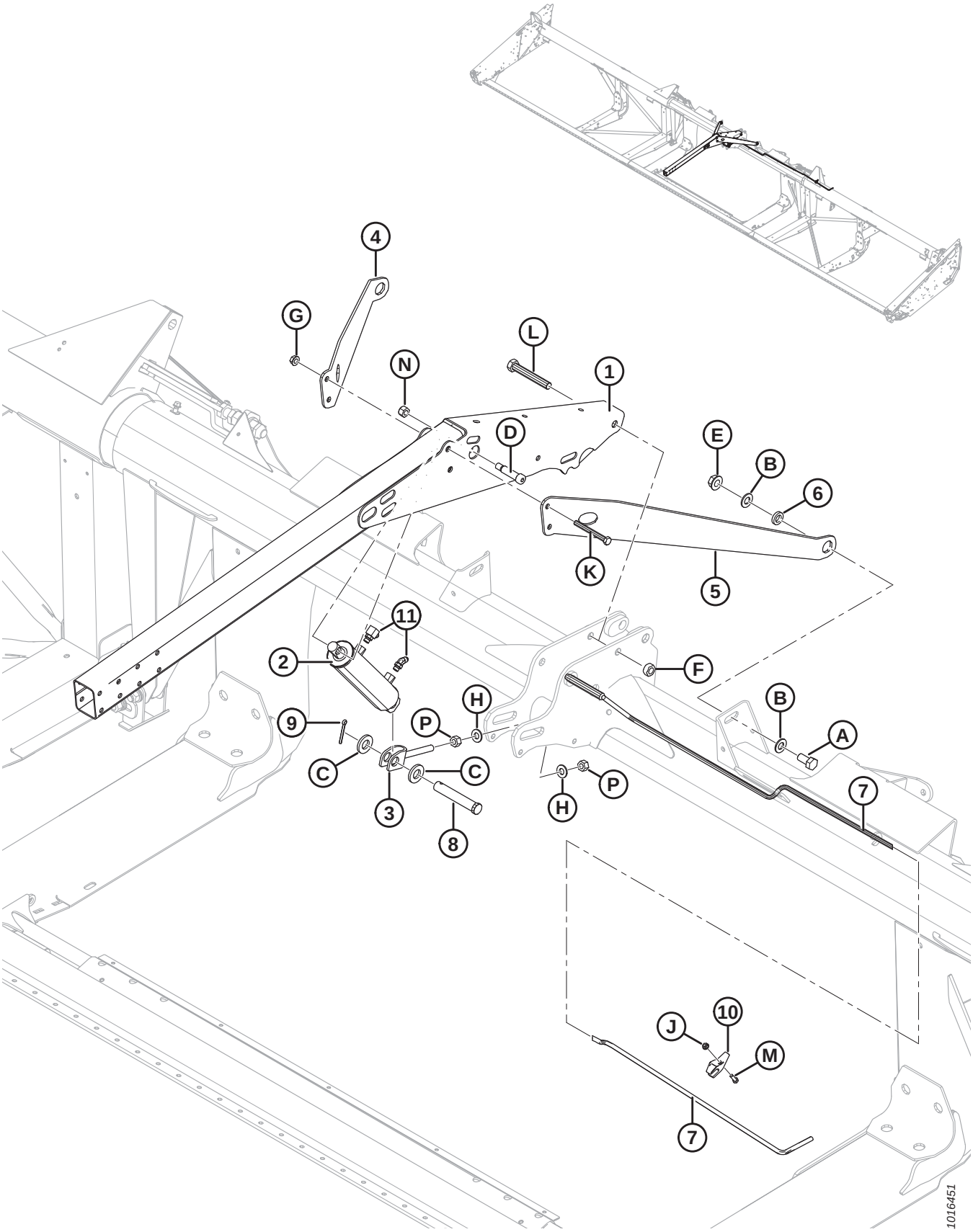

REEL SUPPORT ARMS AND LIFT CYLINDERS – CENTER ARM

Ref	Part Number	Description	Qty	Serial Number
1	164773	ARM – CENTER WELDMENT	1	
2	245671	CYLINDER – HYD CENTER	1	
	132476	SEAL KIT		
3	253412	CLEVIS WELDT	1	
4	125433	BRACE – RH REEL ARM	1	
	164800	BRACE – RH SHORT (EXPORT ONLY)	1	
5	125435	BRACE – LH REEL ARM	1	
	164825	BRACE – LH SHORT (EXPORT ONLY)	1	
6	145461	SPACER – DIAGONAL BRACE	2	
7	304221	ROD – CENTER PROP WELDT FLEX	1	
8	49341	PIN – CLEVIS	1	
9	18609	PIN – COTTER 1/4 DIA X 2 ZP	1	
10	165734	GUIDE – FLEX REEL PROP PLASTIC	1	
11	REF	FITTINGS – HYDRAULICS [135]		
A	30811	BOLT – HH 3/4 NC X 2.0 LG GR 8 ZP		
B	176009	WASHER – NORDLOCK 3/4 IN. SP		
C	174858	WASHER – FLAT		
D	135737	BOLT – SHOULDER, SOCKET HEAD, 3/4 X 2.25 LG		
E	135367	NUT – FLANGE DT SMTH FACE 0.75-10 UNC GR. G		
F	102636	NUT – HEX DT .750-10 UNC SIDE LOCK		
G	50186	NUT – FLANGE LOCK SM FACE DT 0.500-13 UNC GR 5		
H	30441	WASHER – HARDENED		
J	30280	NUT – FLG SIDE LK SMTH FACE 5/16 NC GR 5 ZP		
K	30209	BOLT – HH 1/2 NC X 4.5 LG GR 5 ZP		
L	30549	BOLT – HEX HD 3/4-10 X 5.5 GR5-AA1J		
M	21087	BOLT – HEX HD 5/16 NC X 1.0 LG GR 5 ZP		
N	18666	NUT – HEX LOCK DT 5/8-11 UNC ZP		
P	18592	NUT – HEX 5/8-11 UNC GR 5 ZP		

135. Refer to Section *34 Reel Drive Hydraulics – Lift and Fore-Aft – Double Reel (FD130, FD135, FD140, and FD145), page 105*.

32 Reel Support Arms and Lift Cylinders – Outer Arms

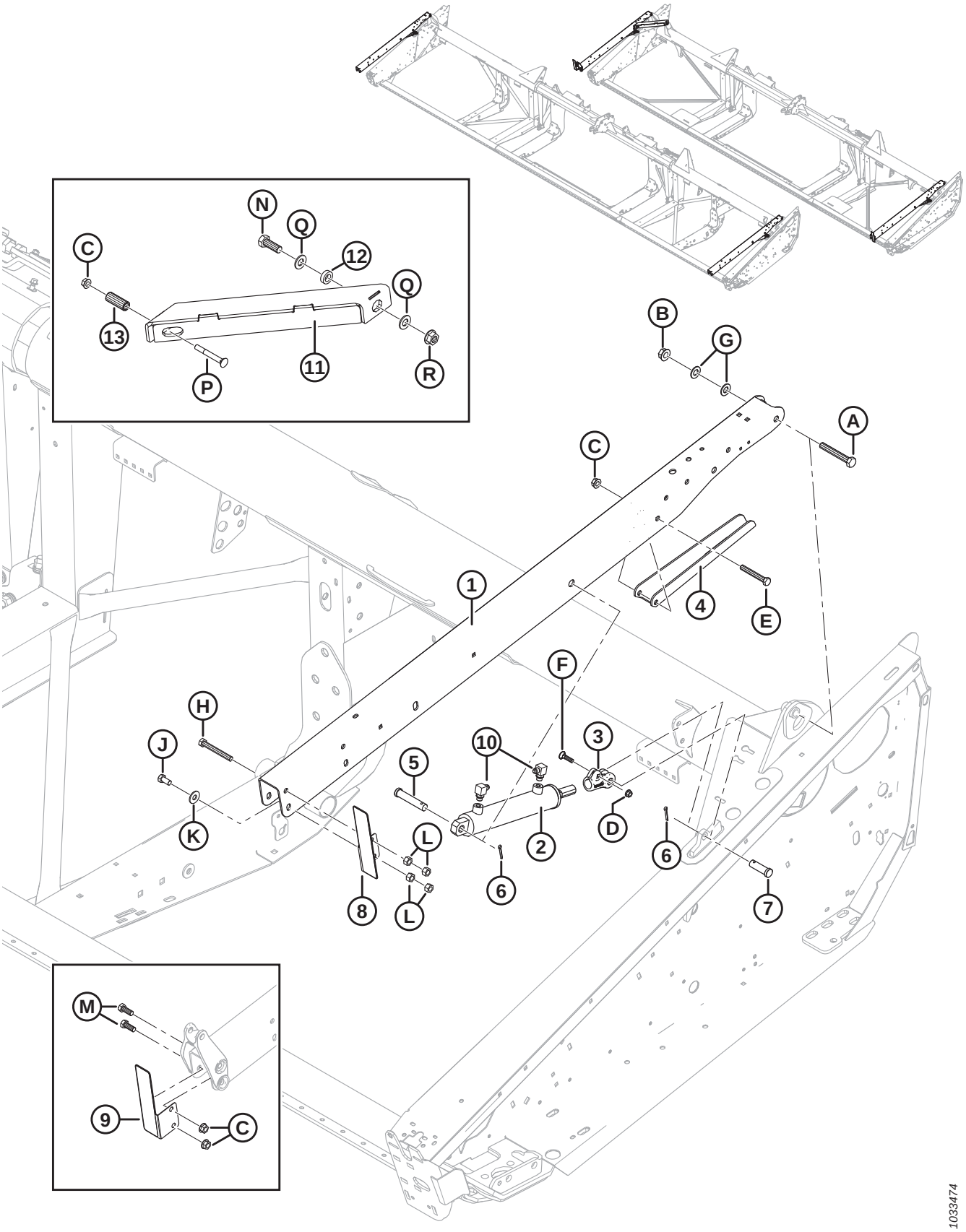

REEL SUPPORT ARMS AND LIFT CYLINDERS – OUTER ARMS

Ref	Part Number	Description	Qty	Serial Number
	B6890	KIT – FD125E SHORT REEL BRACE [136]		
1	255282	ARM – OUTER C/W DECALS [137]	2	
	255788	ARM – OUTER C/W DECALS (EXPORT ONLY) [137]	2	
2	245993	CYLINDER – HYD LH	1	
	132475	SEAL KIT		
	245992	CYLINDER – HYD RH	1	
	132474	SEAL KIT		
	174879	BREATHER – ORB #6		
3	304314	CLEVIS	2	
4	304222	SUPPORT – REEL PROP	2	
5	20312	PIN – CLEVIS	2	
6	18648	PIN – COTTER 3/16 DIA X 1.25 ZP	4	
7	18626	PIN – CLEVIS	2	
8	294068	ASSY – BRACKET W/ REFLECTOR LH [138]	1	
9	294069	ASSY – BRACKET W/ REFLECTOR RH [138]	1	
10	REF	FITTINGS – HYDRAULICS [139]		
11	326097	BRACE – DIAGONAL WELDT [140]	1	
	326181	BRACE – DIAGONAL WELDT SHORT (EXPORT ONLY) [140]	1	
	326192	KIT – SINGLE REEL FLEX SHORT BRACE [141]	A/R	
12	172158	SPACER – DIAGONAL BRACE [140]	1	
13	174333	SPACER [140]	1	
A	172922	BOLT – HH 5/8 NC X 4.125 LG GR 5 ZP		
B	50225	NUT – FLANGE DT SMOOTH FACE .625-11 UNC		
C	50186	NUT – FLANGE LOCK SM FACE DT 0.500-13 UNC GR 5		
D	30228	NUT – FLANGE DT SMOOTH FACE 0.375-16 UNC		
E	21581	BOLT – HH 1/2 NC X 3.5 LG GR 5 ZP		
F	21484	BOLT – RHSN 3/8-16 X 1.5 GR 5 ZP		
G	18600	WASHER – SAE FLAT 21/32 I.D. X 1-5/16 IN. O.D. ZP [142]		
H	21589	BOLT – HEX HD 1/2-13 X 4.0 GR 5-AA1J		
J	21575	BOLT – HEX HD 1/2-13 X 1.0 GR5-AA1J		
K	184589	WASHER – FLAT		
L	18591	NUT – HEX 1/2-13 UNC GR 5 ZP		
M	21491	BOLT – HEX HD 1/2-13X1.25 GR5-AA1J		
N	30811	BOLT – HEX HD 3/4-10 X 2.0 GR8-AA1J		

136. Includes Single-Reel Flex Short Brace kit (MD #326192). Kits available through Whole Goods only.
137. Includes decals (MD #131393, 174632).
138. Includes reflector (MD #115146).
139. Refer to Sections *33 Reel Drive Hydraulics – Lift and Fore-Aft – Single Reel (FD125), page 101* and *34 Reel Drive Hydraulics – Lift and Fore-Aft – Double Reel (FD130, FD135, FD140, and FD145), page 105*.
140. Single-reel FD125 headers only.
141. Export only. Kit includes short diagonal brace (MD #326181), hardware, and instructions.
142. On FD125 headers, the washers (MD #18600) are used on the RH reel arm only.

REEL SUPPORT ARMS AND LIFT CYLINDERS – OUTER ARMS

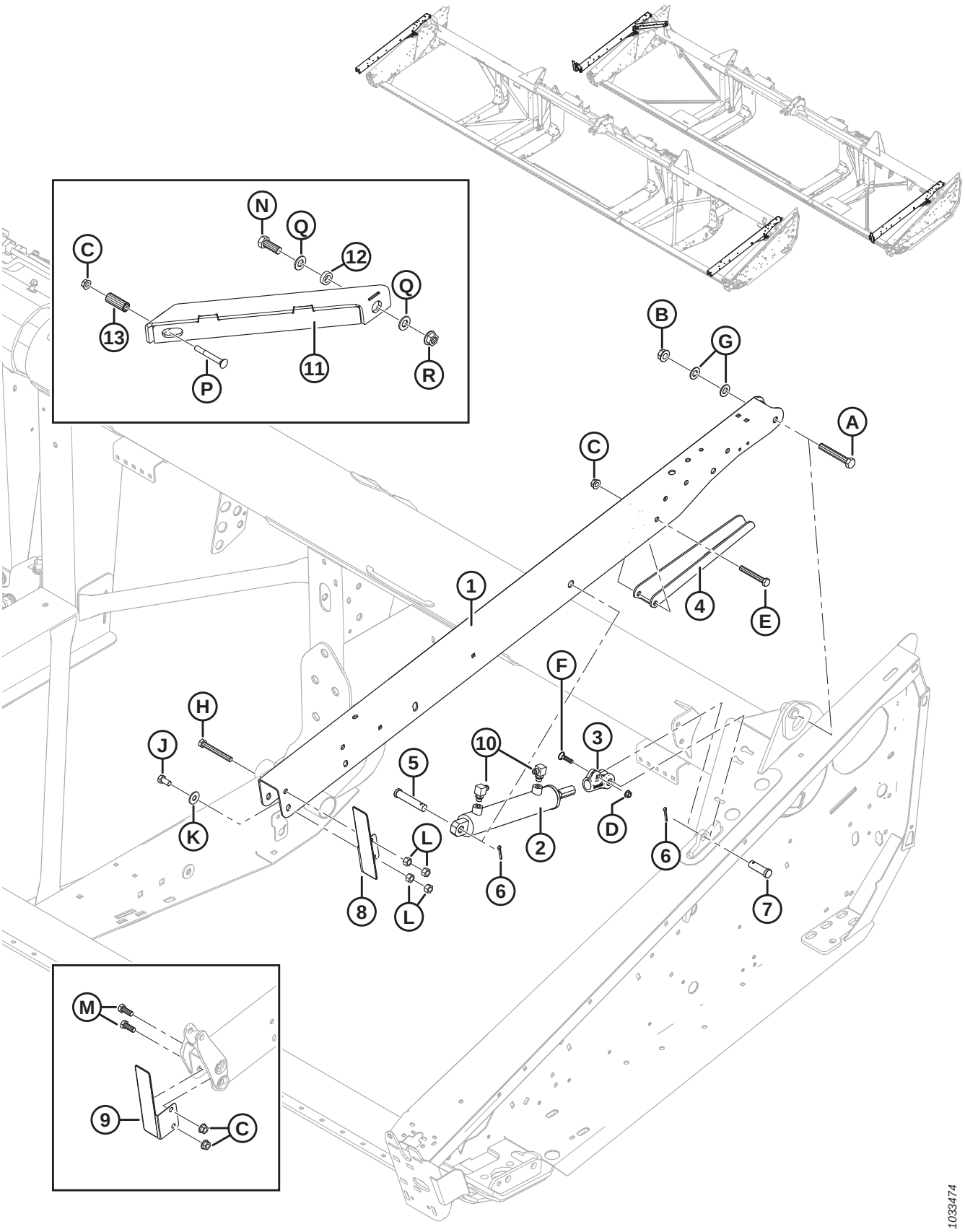

REEL SUPPORT ARMS AND LIFT CYLINDERS – OUTER ARMS

Ref	Part Number	Description	Qty	Serial Number
P	30824	BOLT – RHSN 1/2-13 X 4.0 GR5-AA1J		
Q	176009	WASHER – NORDLOCK 3/4 IN. SP		
R	135367	NUT – FLG DT 3/4-10 UNC GR8 AA1J		

33 Reel Drive Hydraulics – Lift and Fore-Aft – Single Reel (FD125)

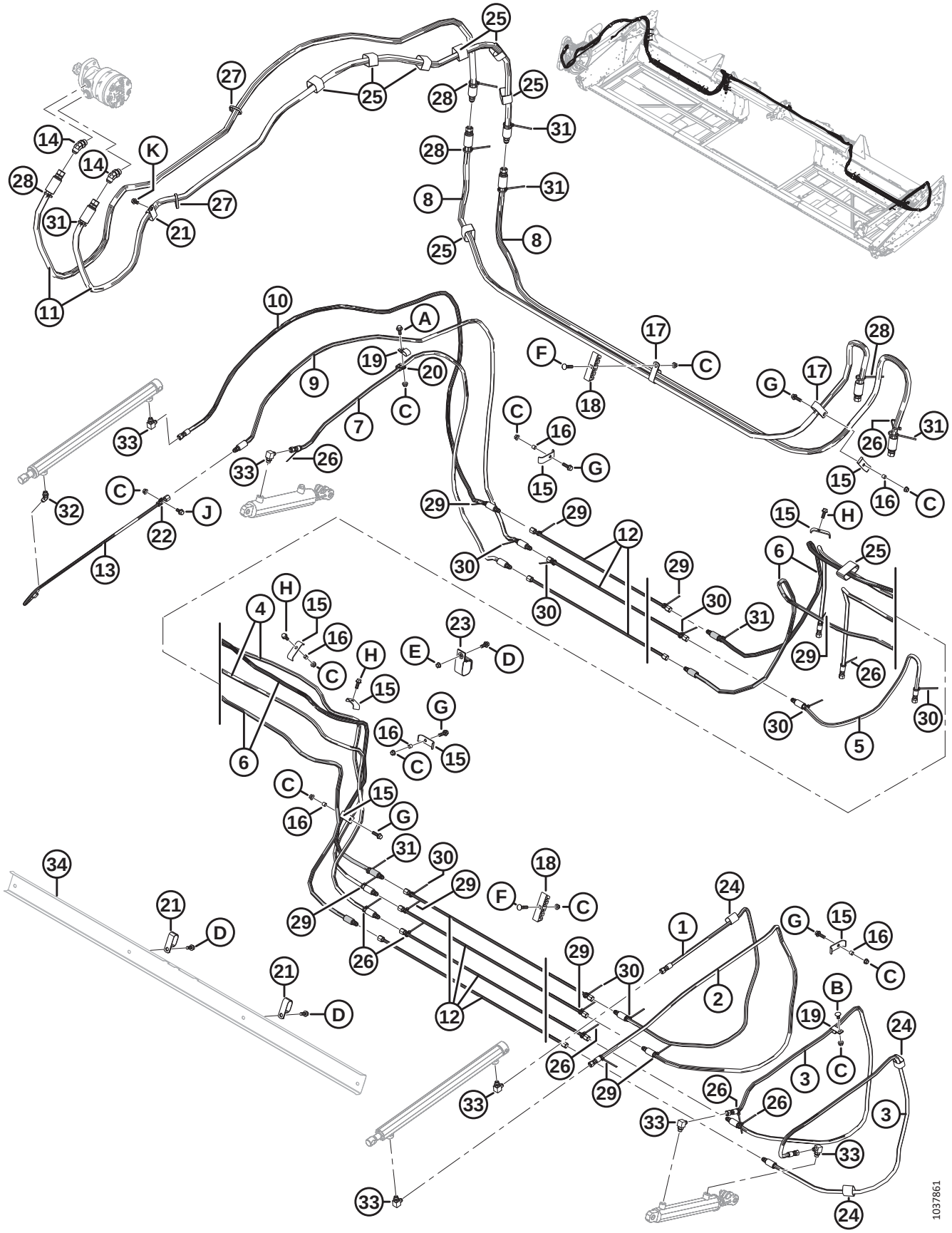

REEL DRIVE HYDRAULICS – LIFT AND FORE-AFT – SINGLE REEL (FD125)

Ref	Part Number	Description	Qty	Serial Number
1	220611	HOSE – HYD, 1/4 IN. I.D., 2270 MM LG, 100R17, METAL REIN.	1	
2	220610	HOSE – HYD, 1/4 IN. I.D., 2285 MM LG, 100R17, METAL REIN.	1	
3	220612	HOSE – HYD, 1/4 IN. I.D., 2025 MM LG, 100R17, METAL REIN.	2	
4	326100	HOSE – HYD, 1/4 IN. I.D., 4870 MM LG, 100R17, METAL REIN.	2	
5	220625	HOSE – HYD, 1/4 IN. I.D., 885 MM LG, 100R17, METAL REIN.	1	
6	220613	HOSE – HYD, 1/4 IN. I.D., 5470 MM LG, 100R17, METAL REIN.	2	
7	220614	HOSE – HYD, 1/4 IN. I.D., 1980 MM LG, 100R17, METAL REIN.	1	
8	326096	HOSE – HYD, 1/2 IN. I.D., 3150 MM LG, 100R17, METAL REIN.	2	
9	220609	HOSE – HYD, 1/4 IN. I.D., 2525 MM LG, 100R17, METAL REIN.	1	
10	220608	HOSE – HYD, 1/4 IN. I.D., 2525 MM LG, 100R17, METAL REIN.	1	
11	172978	HOSE – HYD, 1/2 IN. I.D., 3000 MM LG, 100R17, METAL REIN.	1	
12	326093	LINE – HYDRAULIC	7	
13	253815	LINE – HYD	1	
14	50103	FITTING – ELBOW 45° HYD, C/W O-RING 10-10	2	
15	103351	HOLDER	8	
16	294121	SPACER	6	
17	252942	CLAMP – INSULATED 1 INCH	4	
18	220478	CLAMP	5	
19	135234	CLAMP – DOUBLE HOSE INSULATED	2	
20	135716	CLAMP – INSULATED 5/8 IN.	1	
21	50022	CLAMP – INSULATED 15/16 IN.	**3**	
22	136410	CLAMP – INSULATED 3/8 IN.	1	
23	253305	CINCH STRAP, HANGING, 4 IN. LG	1	
24	135443	FASTENER – CINCH STRAP 4 IN. LG	3	
25	135444	CINCH STRAP 6 IN. LG	8	
26	21763	FASTENER – CABLE TIE, BLACK, 160 MM LG	8	
27	30753	FASTENER – CABLE TIE, BLACK, 305 MM LG	2	
28	40701	FASTENER – CABLE TIE, YELLOW	4	
29	40702	FASTENER – CABLE TIE, RED	9	
30	49227	FASTENER – CABLE TIE, GREEN	8	
31	49232	FASTENER – CABLE TIE, WHITE	6	
32	30284	FITTING – ELBOW 45° HYD, C/W O-RING 6-6	1	
33	30282	FITTING – ELBOW 90° HYD, C/W O-RING 6-6	6	
34	**REF**	**HOLDER – HOSES** [143]		
A	21447	BOLT – HH LG FLG (SER FACE) 3/8 NC X 1.0 GR 5 ZP		
B	21472	BOLT – RHSN 3/8 NC X 0.75 GR 5 ZP		
C	30228	NUT – FLANGE DT SMOOTH FACE 0.375-16 UNC		
D	21975	BOLT – HEX FLG SER HD 3/8-16 X 1.0 GR 5-AA1J		
E	118193	NUT – FLANGE HEX .375 UNC		
F	50197	BOLT – RHSN 3/8-16 X 1.75-GR5-AA1J		

143. Refer to Section *23 Draper Drive – Manual Deck Shift, page 63*.

REEL DRIVE HYDRAULICS – LIFT AND FORE-AFT – SINGLE REEL (FD125)

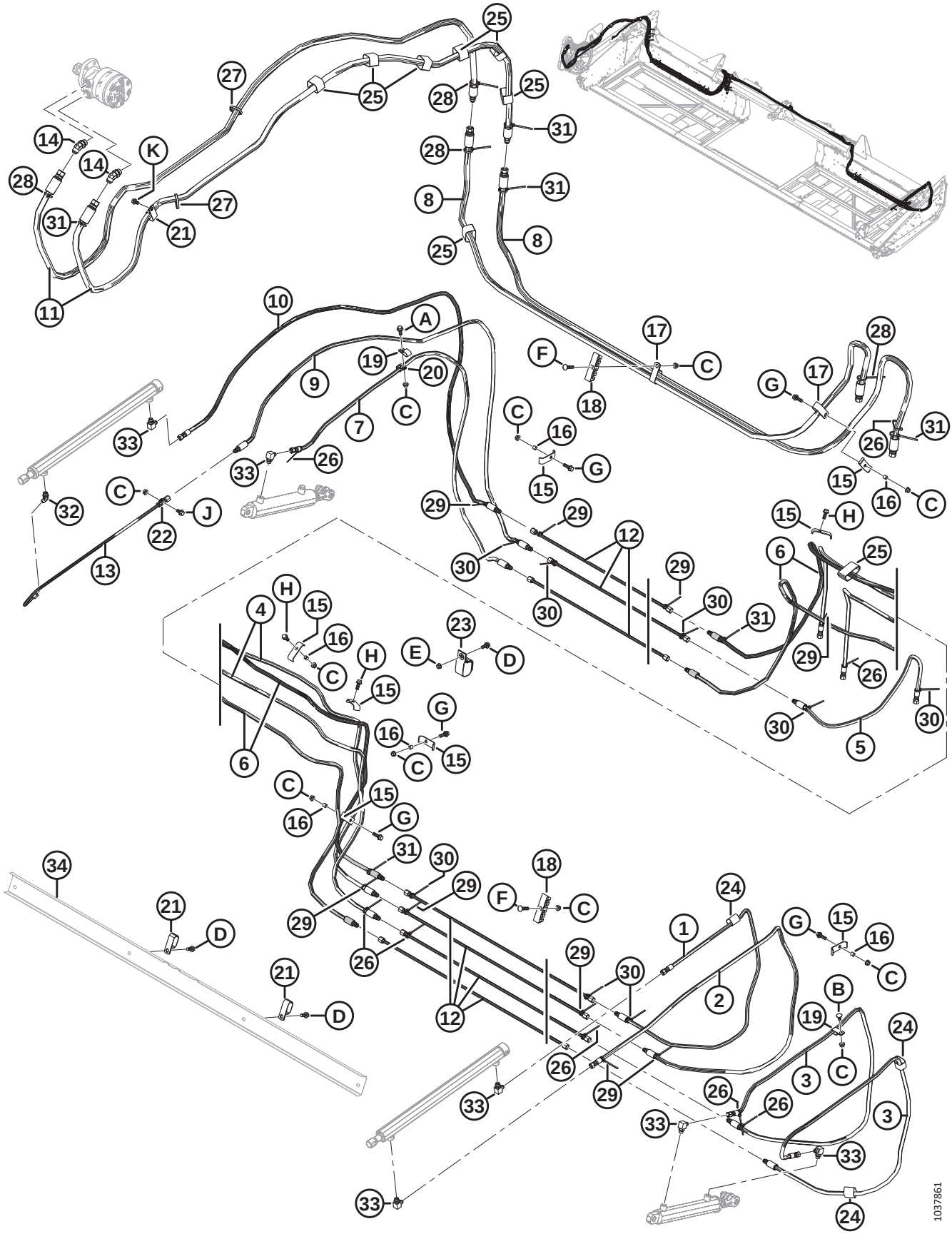

REEL DRIVE HYDRAULICS – LIFT AND FORE-AFT – SINGLE REEL (FD125)

Ref	Part Number	Description	Qty	Serial Number
G	30936	BOLT – HEX FLG SER HD 3/8-16 X 1.25 GR 5-AA1J		
H	135193	SCREW – HEX WASH HD 3/8 NC X 1.0-AA1J		
J	21821	BOLT – HEX FLG SER HD 3/8-16 X 0375 GR5-AA1J		
K	101898	SCREW – HEX WASH HD 3/8 NC X 5/8		

34 Reel Drive Hydraulics – Lift and Fore-Aft – Double Reel (FD130, FD135, FD140, and FD145)

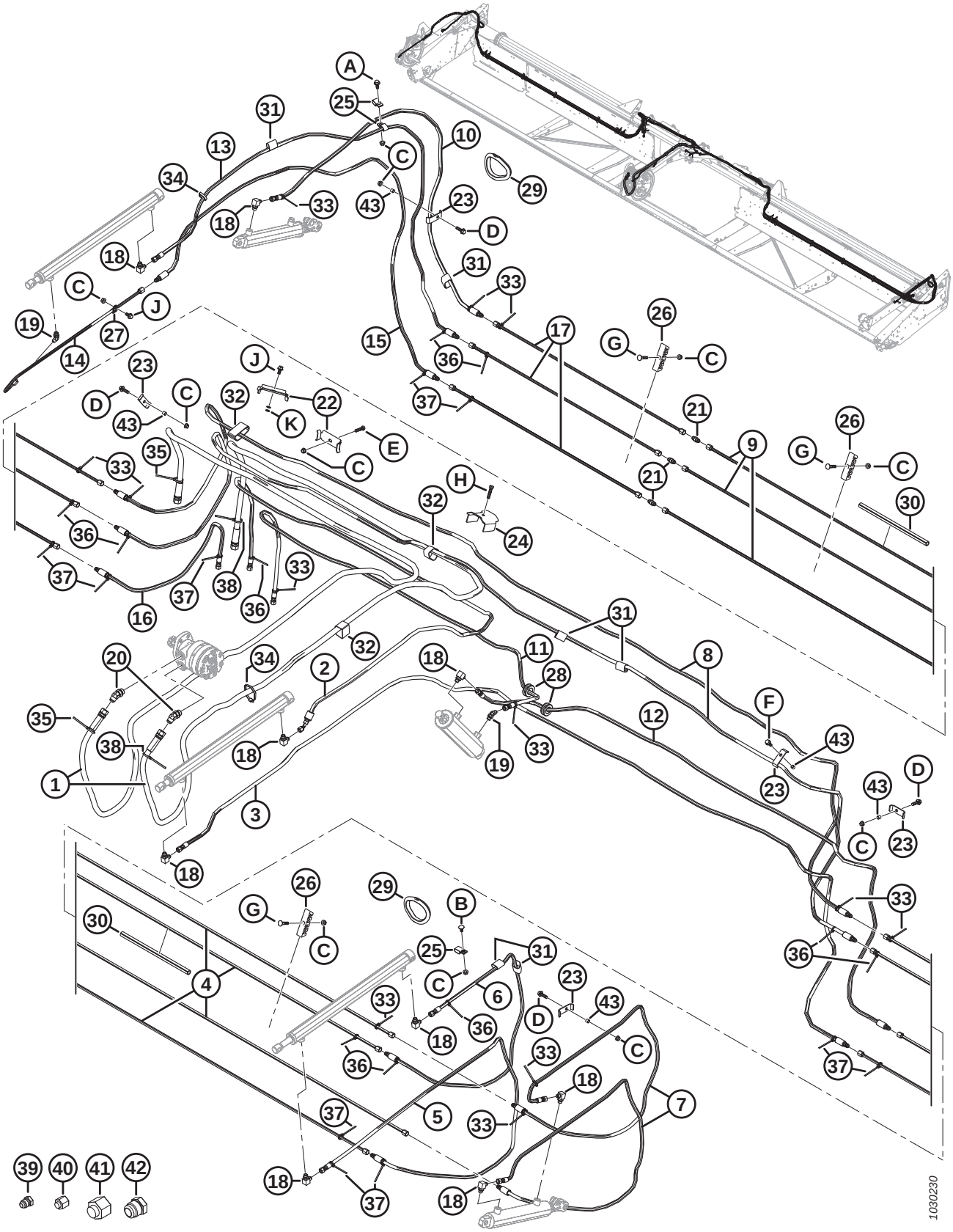

REEL DRIVE HYDRAULICS – LIFT AND FORE-AFT – DOUBLE REEL (FD130, FD135, FD140, AND FD145)

Ref	Part Number	Description	Qty	Serial Number
1	172758	HOSE – HYD REEL DRIVE MOTOR PRESSURE AND RETURN	2	
2	220241	HOSE – HYD, CENTER REEL FORE-AFT IN	1	
3	220607	HOSE – HYD, CENTER REEL FORE-AFT OUT	1	
4	220598	LINE – HYD, LH SIDE (30 FT)	4	
	220597	LINE – HYD, LH SIDE (35 FT)	4	
	123676	LINE – HYD, LH SIDE (40 FT)	4	
	123702	LINE – HYD, LH SIDE (45 FT)	4	
5	220610	HOSE – HYD, LEFT REEL (FORE-AFT IN)	1	
6	220611	HOSE – HYD, LEFT REEL (FORE-AFT OUT)	1	
7	220612	HOSE – HYD, LEFT REEL LIFT	2	
8	220613	HOSE – HYD, LEFT TO RIGHT REEL LIFT AND FORE-AFT, ACROSS OPENING	2	
9	220598	LINE – HYD, RH SIDE (30 FT)	3	
	220597	LINE – HYD, RH SIDE (35 FT)	3	
	220589	LINE – HYD, RH SIDE (40 AND 45 FT)	3	
10	220614	HOSE – HYD, RIGHT REEL LIFT	1	
11	220615	HOSE – HYD, CENTER (REEL LIFT IN)	1	
12	220616	HOSE – HYD, CENTER (REEL LIFT OUT)	1	
13	220608	HOSE – HYD, RIGHT REEL (FORE-AFT IN)	1	
14	253815	LINE – HYD, RIGHT REEL (FORE-AFT OUT)	1	
15	220609	HOSE – HYD RIGHT REEL (FORE-AFT TO LINE OUT)	1	
16	220625	HOSE – HYD, REEL FORE-AFT (FORE LINE TO COMBINE)	1	
17	220591	LINE – HYD (40 FT)	3	
	220590	LINE – HYD (45 FT)	3	
18	30282	FITTING – ELBOW 90° HYD, C/W O-RING 6-6	9	
19	30284	FITTING – ELBOW 45° HYD, C/W O-RING 6-6	2	
20	50103	FITTING – ELBOW 45° HYD, C/W O-RING 10-10	2	
21	30375	FITTING – UNION HYD (40-45 FT ONLY)	3	
22	294080	HOLDER	2	
23	103351	HOLDER	7	
24	123599	HOLDER – HYD HOSE, CENTER ARM	1	
25	135234	CLAMP – DOUBLE HOSE INSULATED	3	
26	220478	CLAMP [144]		
27	136410	CLAMP – INSUL. 3/8 IN. (LINE AT RH FORE AFT CYLINDER)	1	
28	220617	GROMMET – RUBBER, 25 MM ID	2	
29	125722	GROMMET – RUBBER, 99 MM ID (40–45 FT ONLY)	2	
30	26671	CONDUIT (45 FT ONLY)	1	
31	135443	FASTENER – CINCH STRAP 4 IN. LG	11	
32	135444	FASTENER – CINCH STRAP 6 IN. LG	8	
33	21763	FASTENER – CABLE TIE (BLACK) 190 MM LG	13	

144. Quantities: 30 ft. = 6, 35 ft. = 8, 40 ft. = 10, 45 ft. = 12.

REEL DRIVE HYDRAULICS – LIFT AND FORE-AFT – DOUBLE REEL (FD130, FD135, FD140, AND FD145)

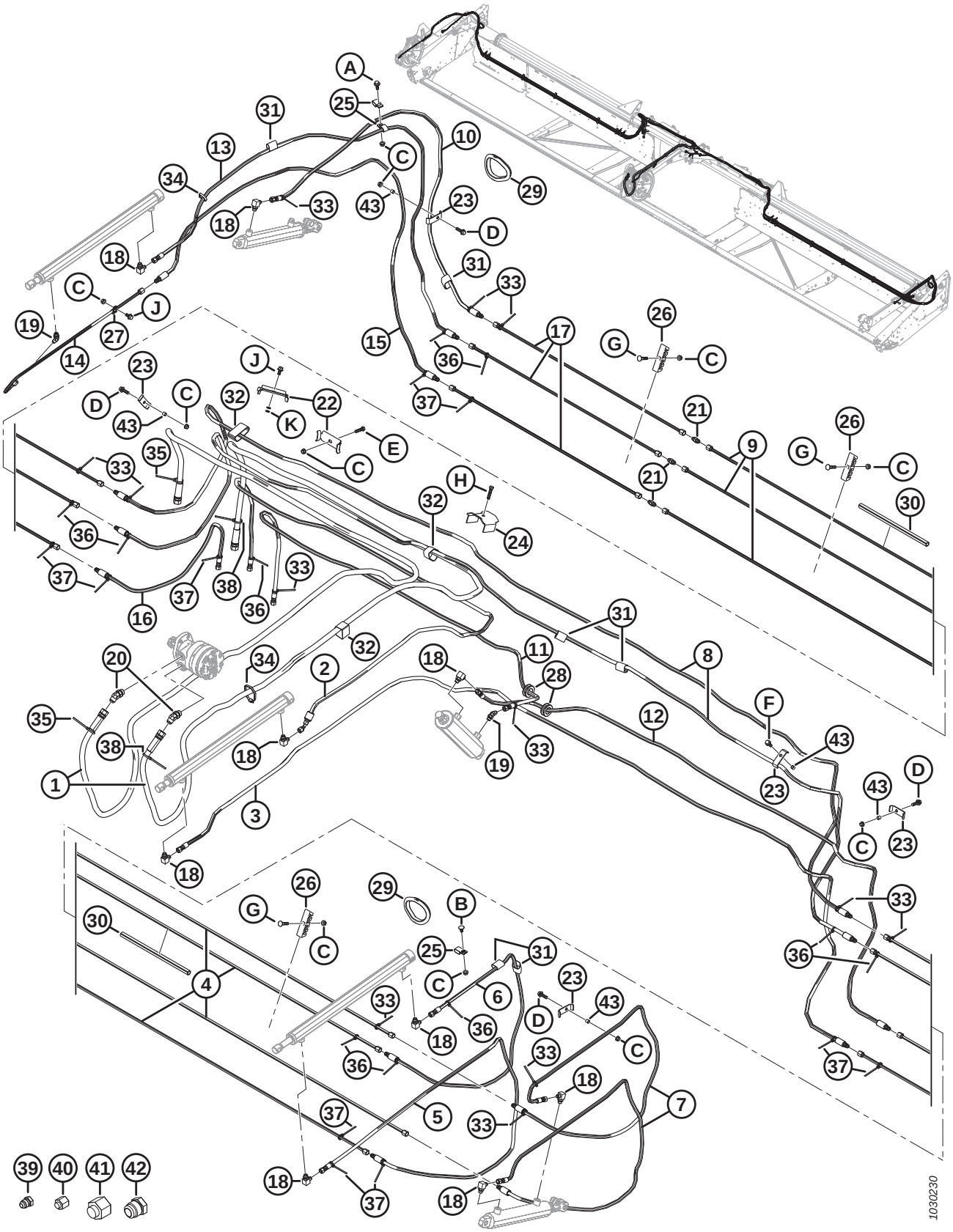

Ref	Part Number	Description	Qty	Serial Number
34	30753	FASTENER – CABLE TIE (BLACK) 365 MM LG	7	
35	40701	FASTENER – CABLE TIE (YELLOW)	2	
36	40702	FASTENER – CABLE TIE (RED)	10	
37	49227	FASTENER – CABLE TIE (GREEN)	10	
38	49232	FASTENER – CABLE TIE (WHITE)	2	
39	50178	PLUG – 3/8 IN. TUBE [145]	6	
40	30813	CAP – 3/8 IN. TUBE 37° FLARE [145]	6	
41	30999	CAP – 3/4 IN. TUBE 37° FLARE [145]	2	
42	103576	PLUG – 3/4 IN. TUBE [145]	2	
43	294121	SPACER	6	
A	21447	BOLT – HH LG FLG (SERR FACE) 3/8 NC X 1.0 GR5 ZP		
B	21472	BOLT – RHSN 3/8 NC X 0.75 GR5 ZP		
C	30228	NUT – FLANGE DT SMOOTH FACE 0.375-16 UNC		
D	30936	BOLT – HH FLG (SERR FACE) 3/8 NC X 1.25 GR5 ZP		
E	21561	BOLT – HH 3/8 NC X 1.5 LG GR 5 ZP		
F	135193	SCREW – HEX WASH HD THD ROLLING 3/8 NC X 1.0		
G	50197	BOLT – RHSN 3/8-16 X 1.75 GR 5 ZP		
H	20078	BOLT – HH 3/8 NC X 1.75 LG GR5 ZP		
J	21821	BOLT – HH FLG (SERR FACE) 3/8 NC X 0.75 GR5 ZP		
K	133521	WASHER – 3/8 X 5/8, 0.062		

145. For shipping only.

35 Electrical Components – FD1 Series

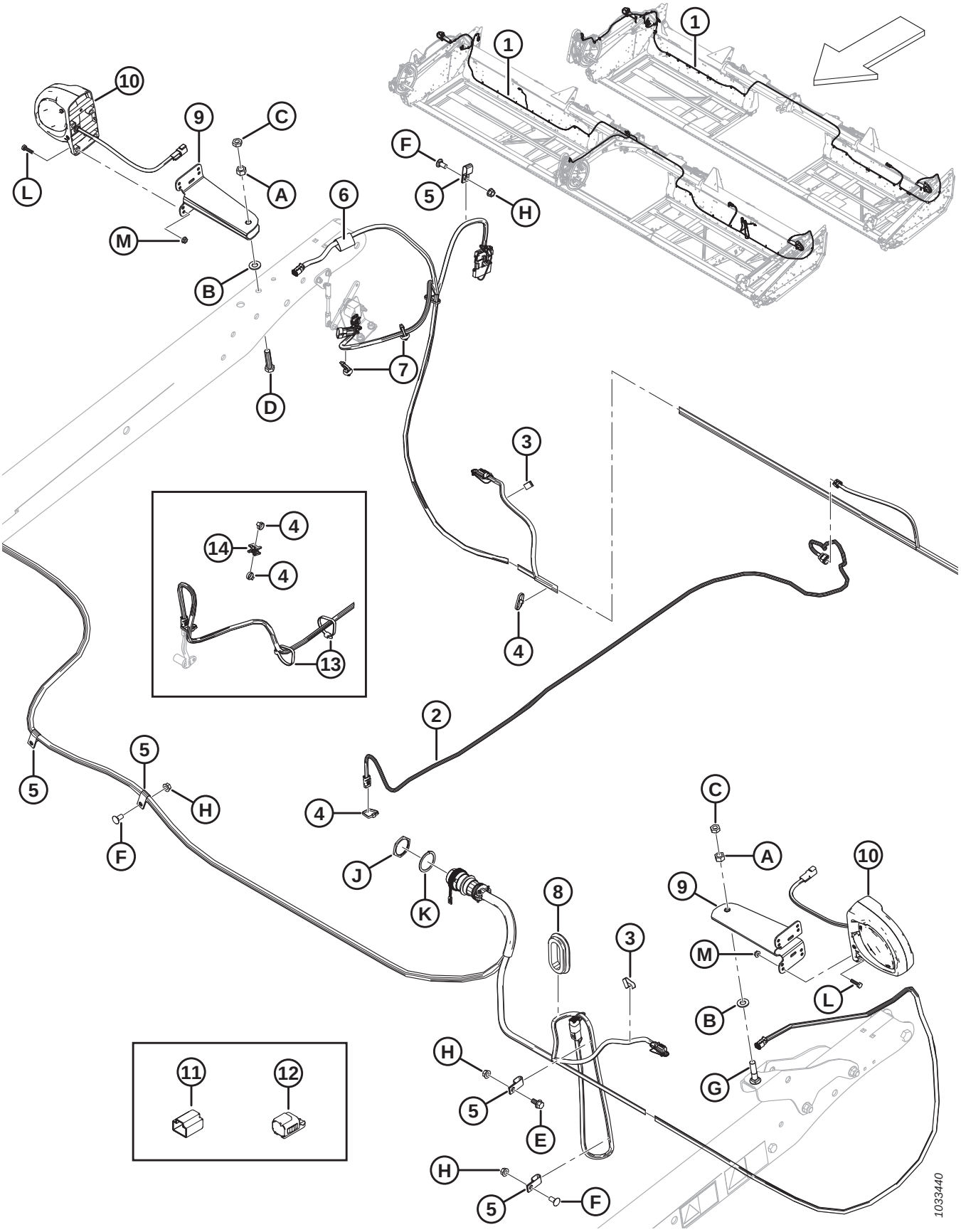

ELECTRICAL COMPONENTS – FD1 SERIES

NOTE:

For specific electrical harness parts, refer to Electrical Connector Parts Catalog (MD #169641).

Ref	Part Number	Description	Qty	Serial Number
1	326072	HARNESS – FD125	1	
	304385	HARNESS – FD130	1	
	304386	HARNESS – FD135	1	
	304387	HARNESS – FD140	1	
	304388	HARNESS – FD145	1	
2	255328	HARNESS – REEL SPEED, FD1 SERIES	1	
3	21218	CLIP – WIRING	2	
4	21763	FASTENER – CABLE TIE, BLACK, 160 MM LG [146]	A/R	
5	135233	CLAMP – DOUBLE HOSE INSULATED [147]	A/R	
6	135443	FASTENER – CINCH STRAP 4 IN. LG	1	
7	136655	FASTENER – FIR TREE MT W/ TIE [148]	2	
8	172877	GROMMET – 2.38 IN. I.D. [149]	A/R	
9	125343	BRACKET – HEADER LIGHT	2	
10	203547	LAMP – CLEARANCE	2	
	139630	LENS – AMBER	A/R	
11	134954	DUST CAP – PLUG, 3 POS, DTM [150]	A/R	
12	134741	CAP – PLUG, DEUTSCH, DT, 2 POS [151]	A/R	
13	30753	FASTENER – CABLE TIE, BLACK, 305 MM LG [152]	2	
14	134442	SPACER – DUAL SWIVEL SADDLE [152]	15	
A	18591	NUT – HEX 1/2-13 UNC GR 5 ZP		
B	18599	WASHER – SAE FLAT 17/32 I.D. X 1-1/16 IN. O.D. ZP		
C	21056	NUT – HEX JAM 1/2-13 UNC GR 5 ZP		
D	21576	BOLT – HH 1/2 NC X 2.0 LG GR 5 ZP		
E	21821	BOLT – HH FLG (SER FACE) 3/8 NC X 0.75 GR 5 ZP		
F	21863	BOLT – RHSSN 3/8 NC X 0.75 LG GR 5 ZP		
G	30027	BOLT – RHSN 1/2 NC X 2.25 LG GR 5 ZP		
H	30228	NUT – FLANGE DT SMOOTH FACE 0.375-16 UNC		
J	134010	NUT – PANEL, HD30, SIZE 24		
K	134011	WASHER – LOCK SPRING, DEUTSCH HD, SIZE 24		
L	21573	BOLT – HEX HD 1/4 NC X 1.0 LG GR 5 ZP		
M	21455	NUT – FLG (SER FACE) 1/4 NC GR 5 ZP		

146. Quantities: 25 ft. = 38, 30 ft. = 23, 35 ft. = 31, 40 ft. = 39, 45 ft. = 47.
147. Quantities: 25 ft. = 4, 30–45 ft. = 7.
148. Located near right header lighting assembly.
149. Quantities: 30–40 ft. = 1, 45 ft. = 2.
150. Cap required to cover socket when reel speed sensor is not installed.
151. Caps required to cover LH and RH light socket pins (P521 and P520) when exposed due to lights not being installed as per export configuration.
152. 25 ft. only.

36 Skid Shoes – End and Center

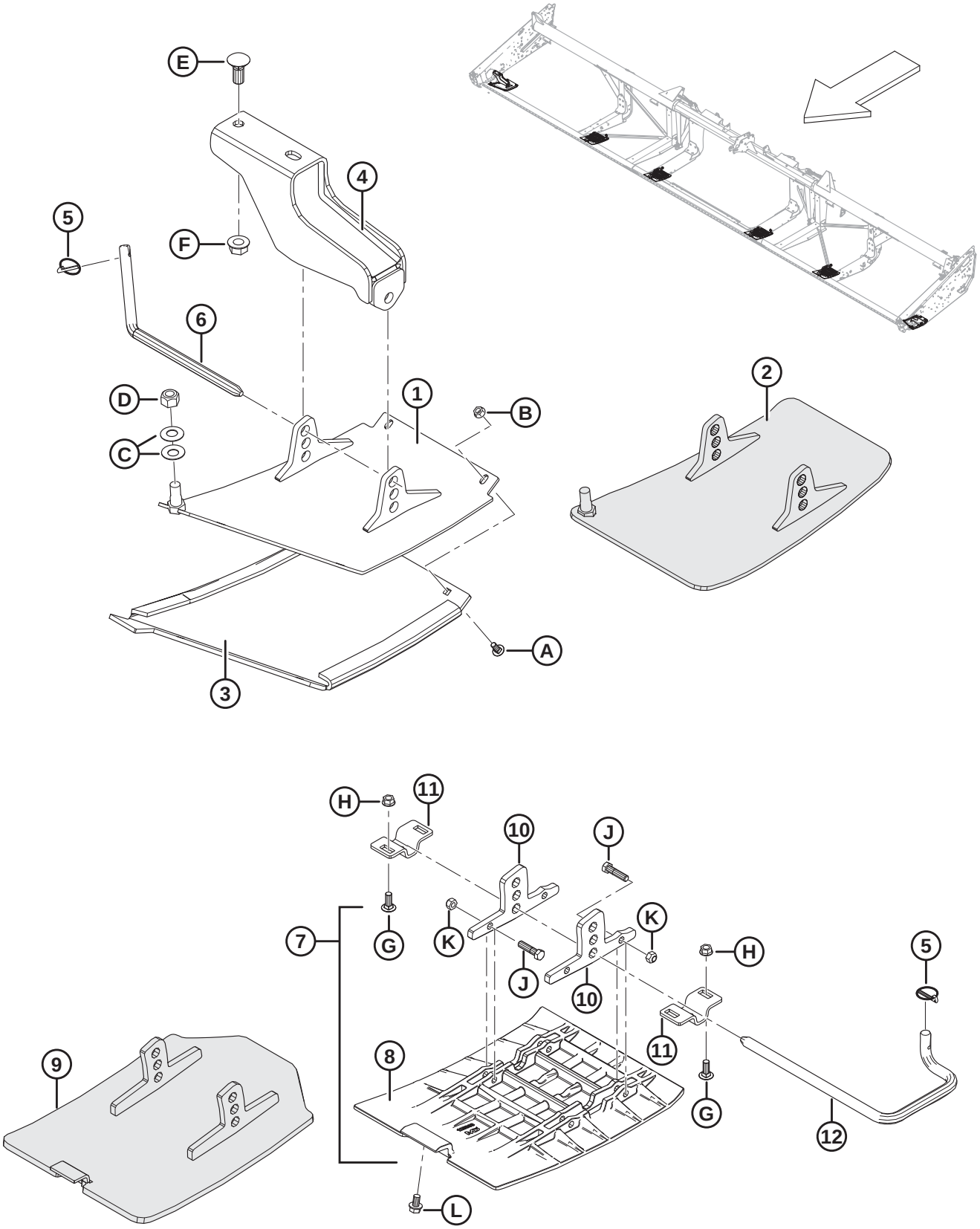

SKID SHOES – END AND CENTER

Ref	Part Number	Description	Qty	Serial Number
	B4963	KIT – OUTBOARD SKID SHOES (POLYETHYLENE) [153]	1	
	B5615	KIT – INBOARD SKID SHOES (POLYETHYLENE) [153]	2	
	B9053	**KIT – SKID SHOES (STEEL)** [153]	**1**	
1	172133	SHOE – LH, WELDT (POLYETHYLENE ONLY)	1	
	172134	SHOE – RH, WELDT (POLYETHYLENE ONLY)	1	
2	313875	SHOE – LH, WELDT (STEEL ONLY)	1	
	313873	SHOE – RH, WELDT (STEEL ONLY)	1	
3	165188	SHOE – LH PLASTIC WEAR (POLYETHYLENE ONLY)	1	
	165386	SHOE – RH PLASTIC WEAR (POLYETHYLENE ONLY)	1	
4	165727	SUPPORT – OUTER SHOE WELDT	2	
5	50193	PIN – LYNCH	6	
6	165722	ROD – ENGAGING	2	
7	245396	KIT – SHOE CENTER [154]	4	
	245397	KIT – SHOE CENTER HARDWARE [155]	A/R	
8	125393	SHOE – CENTER (POLYETHYLENE ONLY)	4	
9	**335608**	**SHOE – WELDT, CENTER (STEEL ONLY)**	**4**	
10	NSS	LUG (POLYETHYLENE ONLY) [156]	8	
11	165429	BRACKET – SHOE SUPPORT	8	
12	165168	ROD – ENGAGING LH	4	
	165588	ROD – ENGAGING RH	4	
A	21281	BOLT – RHSN 5/16 NC X 0.75 GR 5 ZP		
B	21403	NUT – FLG (SER FACE) 5/16 NC GR 5 ZP		
C	135448	WASHER – BELLEVILLE		
D	18666	NUT – HEX LOCK DT 5/8-11 UNC ZP		
E	18523	BOLT – RHSN 5/8 NC X 1.5 GR 5 ZP		
F	50225	NUT – FLANGE DT SMOOTH FACE .625-11 UNC		
G	19965	BOLT – RHSN 3/8 NC X 1.0 GR 5 ZP		
H	30228	NUT – FLANGE DT SMOOTH FACE 0.375-16 UNC		
J	21561	BOLT – HH 3/8 NC X 1.5 LG GR 5 ZP		
K	18669	NUT – HEX LOCK DT 3/8-16 UNC ZP		
L	101898	SCREW – HEX WASH HD THD ROLLING 3/8 NC X 5/8		

153. Kits available through Whole Goods only.
154. Includes shoe (MD #125393), two lugs (not sold separately), and hardware (MD #21561, 18669).
155. Includes two lugs (not sold separately), and hardware (MD #21561, 18669).
156. Not sold separately; to service this part, order shoe center hardware kit (MD #245397).

37 Decals and Reflectors

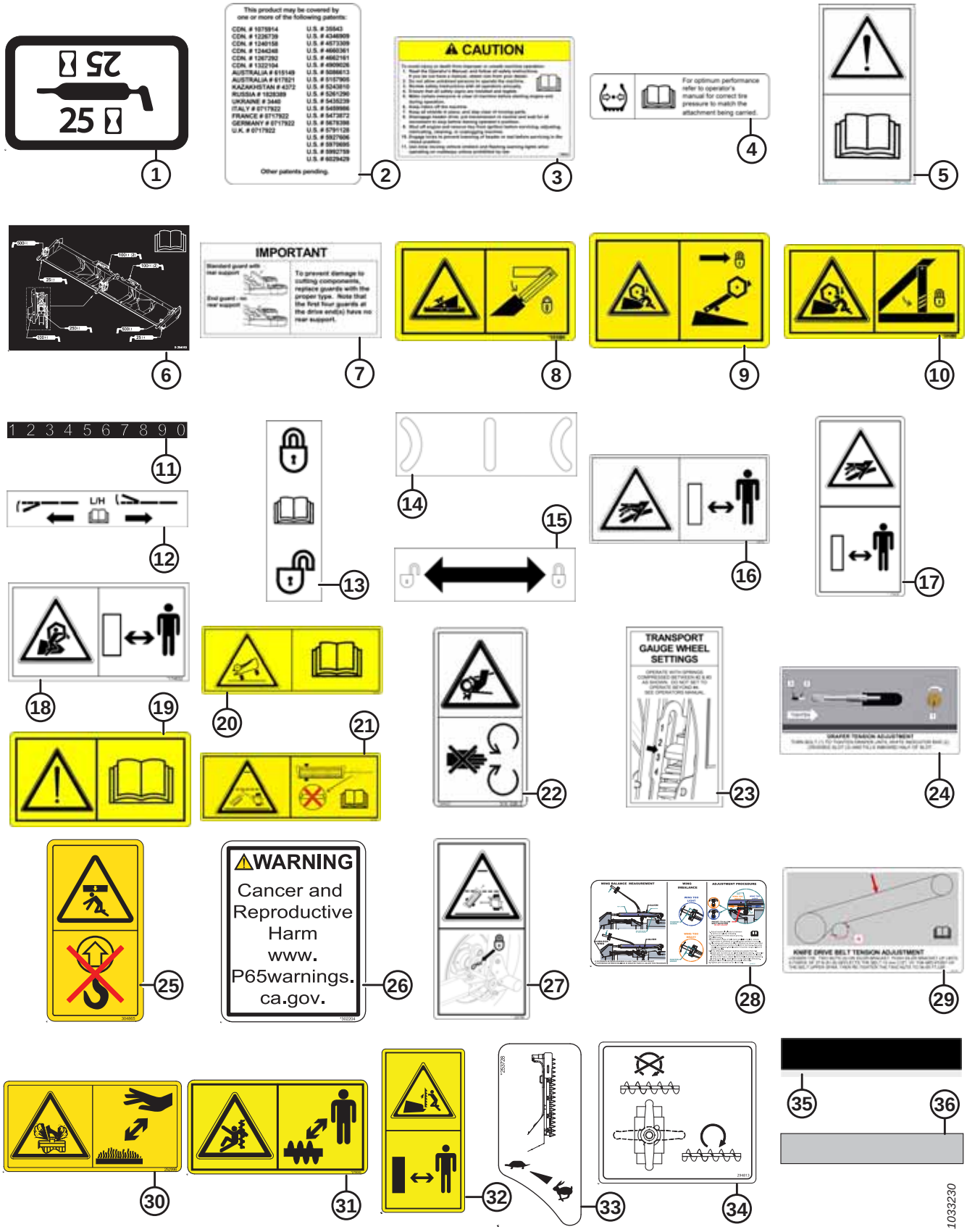

DECALS AND REFLECTORS

Ref	Part Number	Description	Qty	Serial Number
1	23164	DECAL – 25 HR LUBE		
2	32070	DECAL – PATENT NUMBER		
3	109843	DECAL – GENERAL CAUTION		
4	111221	DECAL – TIRE PRESSURE		
5	113482	DECAL – GENERAL HAZARD		
6	294063	DECAL – GREASE, FLEX		
7	129313	DECAL – IMPORTANT: GUARDS		
8	131391	DECAL – HEADER HAZARD		
9	131392	DECAL – REEL HAZARD		
10	131393	DECAL – REEL HAZARD		
11	158217	DECAL – REEL POSITION		
12	165489	DECAL – LH WING BALANCE ADJUSTMENT		
	165490	DECAL – RH WING BALANCE ADJUSTMENT		
13	165218	DECAL – WING LOCKOUT		
14	165993	DECAL – FLEX INDICATOR		
15	174676	DECAL – REEL PROP LOCK		
16	166466	DECAL – HIGH PRESSURE FLUID		
17	174436	DECAL – HIGH PRESSURE FLUID		
18	174632	DECAL – REEL ENTANGLEMENT		
19	184372	DECAL – READ MANUAL		
20	220797	DECAL – WARNING, TIP OVER		
21	220798	DECAL – WARNING, HITCH BUCKLING		
22	184422	DECAL – BELT ENTANGLEMENT		
23	193034	DECAL – TRANSPORT GAUGE WHEEL SETTING		
24	220084	DECAL – DRAPER TENSION, LH		
	279528	DECAL – DRAPER TENSION, RH		
25	304865	DECAL – NO LIFT		
26	302204	DECAL – CA PROPOSITION 65		
27	220799	DECAL – TRANSPORT HITCH		
28	284635	DECAL – LH WING BALANCE		
	284636	DECAL – RH WING BALANCE		
29	245476	DECAL – KNIFE DRIVE BELT TENSION (LH)		
	245477	DECAL – KNIFE DRIVE BELT TENSION (RH)		
30	252996	DECAL – SAFETY FLUID SPRAY		
31	279085	DECAL – WARNING, AUGER		
32	174684	DECAL – VERTICAL KNIFE		
33	253728	DECAL – VERTICAL KNIFE HYD		
34	294813	DECAL – UPPER CROSS AUGER VALVE		
35	245962	DECAL – INDICATOR		

DECALS AND REFLECTORS

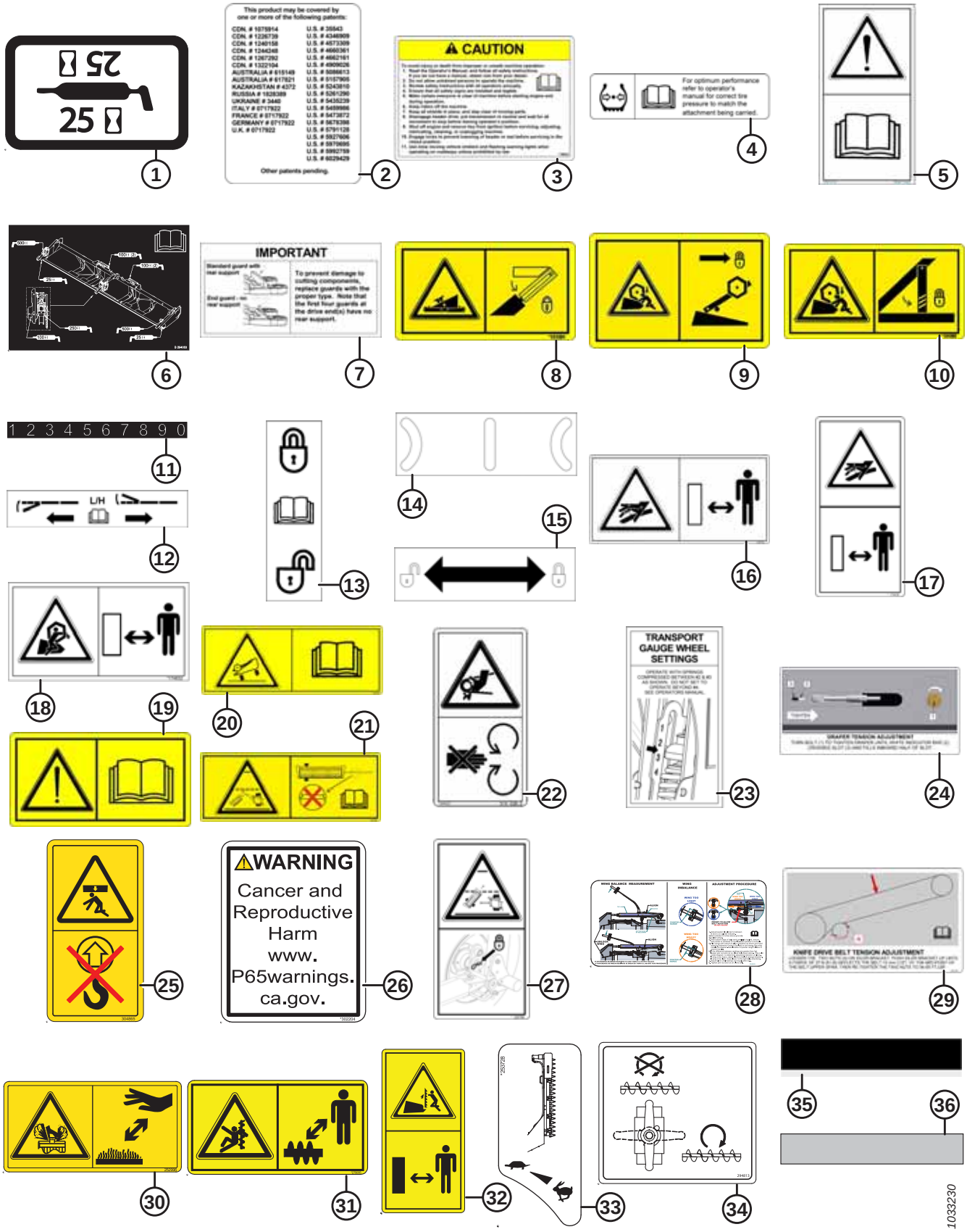

DECALS AND REFLECTORS

Ref	Part Number	Description	Qty	Serial Number
36	115145	REFLECTOR – FLUORESCENT RED-ORANGE, 230 MM LG [157]		
	115146	REFLECTOR – AMBER, 230 MM LG [157]		
	115147	REFLECTOR – RED, 230 MM LG [157]		
	132852	REFLECTOR – AMBER, 638 MM LG [158]		
	165524	REFLECTOR – RED, 230 MM LG [159]		

157. Reflector has rounded corners, for use on metal surfaces.
158. For use on reel center tube.
159. Reflector has rounded corners, for use on plastic surfaces.

38 Decals – Product Identification

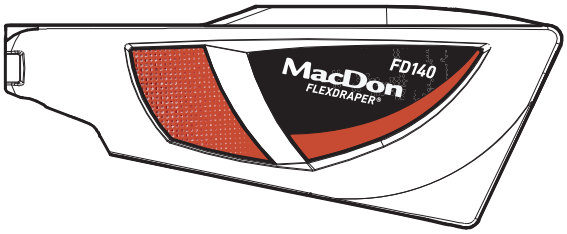

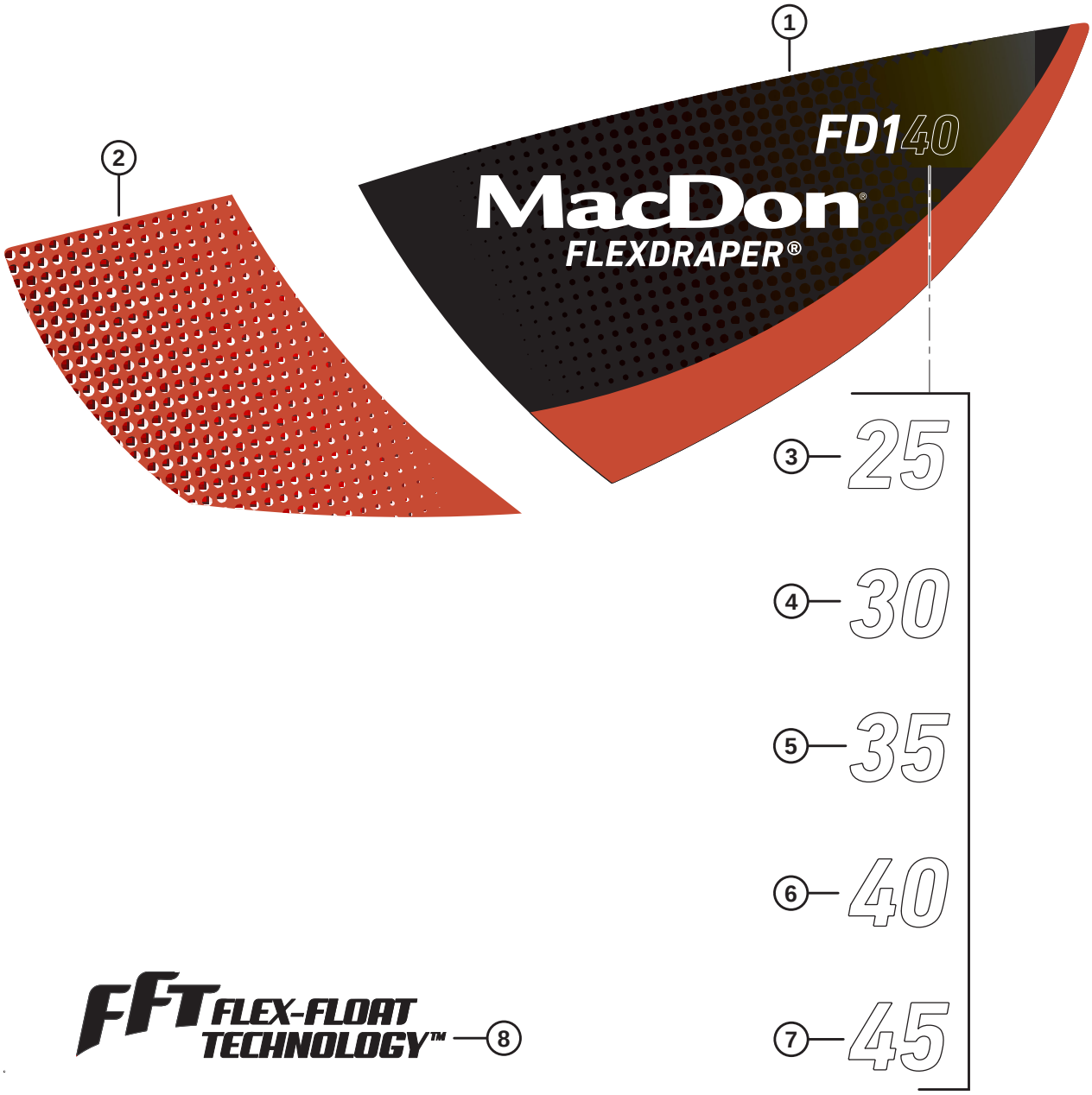

1033444

DECALS – PRODUCT IDENTIFICATION

Ref	Part Number	Description	Qty	Serial Number
1	304083	DECAL – FD1 LH RED ACCENT		
	304084	DECAL – FD1 RH RED ACCENT		
	304114	DECAL – FD1 LH GREEN ACCENT		
	304115	DECAL – FD1 RH GREEN ACCENT		
	304116	DECAL – FD1 LH YELLOW ACCENT		
	304117	DECAL – FD1 RH YELLOW ACCENT		
	304118	DECAL – FD1 LH GREY ACCENT		
	304119	DECAL – FD1 RH GREY ACCENT		
	304122	DECAL – FD1 LH BLACK ACCENT		
	304123	DECAL – FD1 RH BLACK ACCENT		
2	255014	DECAL – LH FRONT, RED		
	255021	DECAL – RH FRONT, RED		
	255131	DECAL – LH FRONT, GREEN		
	255133	DECAL – RH FRONT, GREEN		
	255259	DECAL – LH FRONT, YELLOW		
	255260	DECAL – RH FRONT, YELLOW		
	255115	DECAL – LH FRONT, GREY		
	255316	DECAL – RH FRONT, GREY		
	255117	DECAL – LH FRONT, BLACK		
	255318	DECAL – RH FRONT, BLACK		
3	304140	DECAL – “25”		
4	304141	DECAL – "30"		
5	304142	DECAL – "35"		
6	304143	DECAL – "40"		
7	304144	DECAL – "45"		
8	245093	DECAL – FFT		

39 Decals – French

1

2

3

4

5

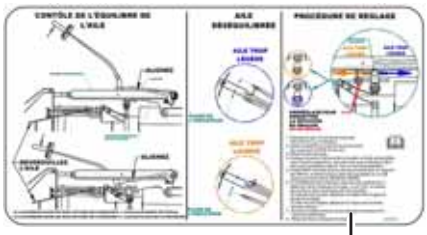

6

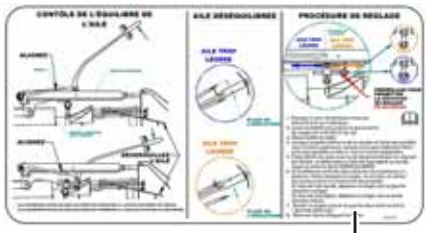

7

8

9

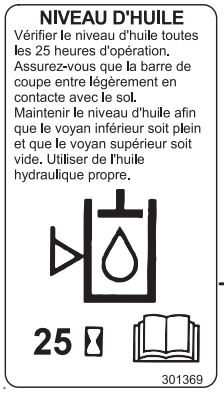

10

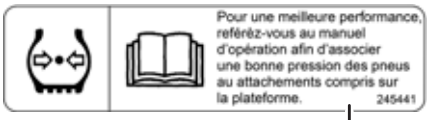

11

12

1023910

DECALS – FRENCH

Ref	Part Number	Description	Qty	Serial Number
1	245428	DECAL – LH DRAPER TENSION, FRENCH		
2	245432	DECAL – RH DRAPER TENSION, FRENCH		
3	245433	DECAL – IMPORTANT: GUARDS, FRENCH		
4	245434	DECAL – LH WING BALANCE ADJUSTMENT, FRENCH		
5	245435	DECAL – RH WING BALANCE ADJUSTMENT, FRENCH		
6	284672	DECAL – LH WING BALANCE, FRENCH		
7	284673	DECAL – RH WING BALANCE, FRENCH		
8	245438	DECAL – IMPORTANT: OIL OPERATING TEMP, FRENCH		
9	245439	DECAL – ADAPTER OIL DRAIN, FRENCH		
10	301369	DECAL – ADAPTER OIL LEVEL, FRENCH		
11	245441	DECAL – TIRE PRESSURE, FRENCH		
12	245443	DECAL – GAUGE WHEEL SETTING, FRENCH		

40 Decals – Portuguese

1

2

3

4

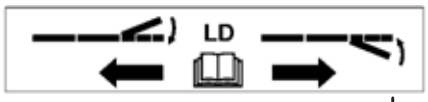

5

6

7

8

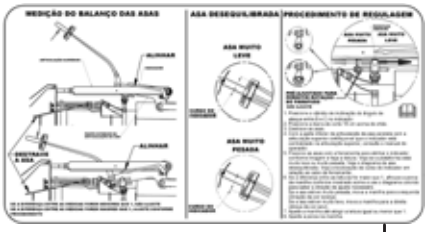

9

10

11

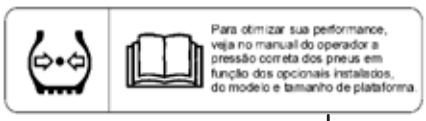

12

1023914

DECALS – PORTUGUESE

Ref	Part Number	Description	Qty	Serial Number
1	220817	DECAL – IMPORTANT: GUARDS, PORTUGUESE		
2	220818	DECAL – IMPORTANT: OIL OPERATING TEMP, PORT		
3	220819	DECAL – ADAPTER OIL DRAIN, PORTUGUESE		
4	220820	DECAL – LH WING BALANCE ADJUSTMENT, PORTUGUESE		
5	220821	DECAL – RH WING BALANCE ADJUSTMENT, PORTUGUESE		
6	301496	DECAL – ADAPTER OIL LEVEL, PORTUGUESE		
7	220823	DECAL – GAUGE WHEEL SETTING, PORTUGUESE		
8	220824	DECAL – LH DRAPER TENSION, PORTUGUESE		
9	284668	DECAL – LH WING BALANCE, PORTUGUESE		
10	284669	DECAL – RH WING BALANCE, PORTUGUESE		
11	220836	DECAL – RH DRAPER TENSION, PORTUGUESE		
12	220885	DECAL – TIRE PRESSURE, PORTUGUESE		

41 Decals – Russian

1

2

3

4

5

6

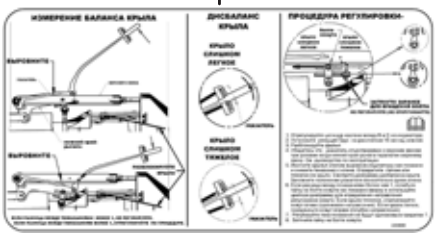

7

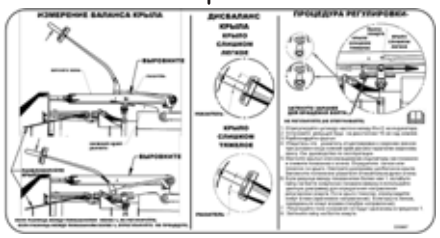

8

9

10

11

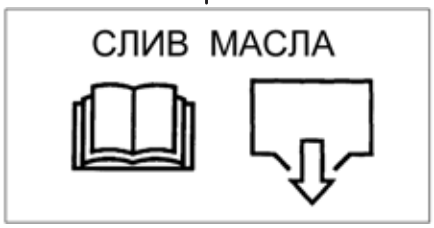

12

13

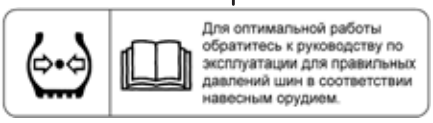

1023915

DECALS – RUSSIAN

Ref	Part Number	Description	Qty	Serial Number
1	220831	DECAL – LH DRAPER TENSION, RUSSIAN		
2	220832	DECAL – IMPORTANT: GUARDS, RUSSIAN		
3	220833	DECAL – TRANSPORT GAUGE WHEEL SETTING, RUSSIAN		
4	220834	DECAL – RH DRAPER TENSION, RUSSIAN		
5	220863	DECAL – GAUGE WHEEL SETTING, RUSSIAN		
6	284670	DECAL – RH WING BALANCE, RUSSIAN		
7	284671	DECAL – LH WING BALANCE, RUSSIAN		
8	220868	DECAL – IMPORTANT: OIL OPERATING TEMP. RUSSIAN		
9	220869	DECAL – LH WING BALANCE ADJUSTMENT, RUSSIAN		
10	220870	DECAL – RH WING BALANCE ADJUSTMENT, RUSSIAN		
11	220871	DECAL – ADAPTER OIL DRAIN, RUSSIAN		
12	301497	DECAL – ADAPTER OIL LEVEL, RUSSIAN		
13	166309	DECAL – TIRE PRESSURE, RUSSIAN		

42 Decals – Spanish

1

2

3

4

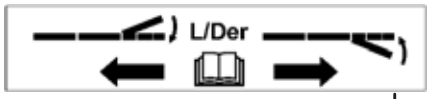

5

6

7

8

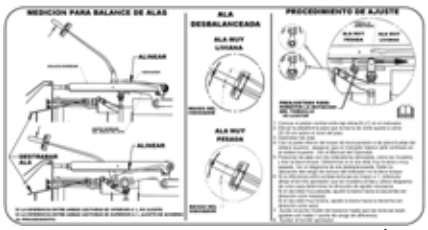

9

10

11

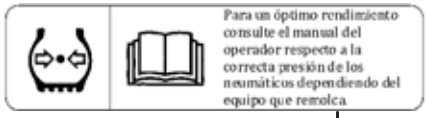

12

1023916

DECALS – SPANISH

Ref	Part Number	Description	Qty	Serial Number
1	220807	DECAL – IMPORTANT: GUARDS, SPANISH		
2	220808	DECAL – IMPORTANT: OIL OPERATING TEMP. SPANISH		
3	220809	DECAL – ADAPTER OIL DRAIN, SPANISH		
4	220810	DECAL – LH WING BALANCE ADJUSTMENT, SPANISH		
5	220811	DECAL – RH WING BALANCE ADJUSTMENT, SPANISH		
6	301495	DECAL – ADAPTER OIL LEVEL, SPANISH		
7	220813	DECAL – GAUGE WHEEL SETTING, SPANISH		
8	220814	DECAL – LH DRAPER TENSION, SPANISH		
9	284666	DECAL – LH WING BALANCE, SPANISH		
10	284667	DECAL – RH WING BALANCE, SPANISH		
11	220835	DECAL – RH DRAPER TENSION, SPANISH		
12	220876	DECAL – TIRE PRESSURE, SPANISH		

43 (Option) Brace Tube Kits

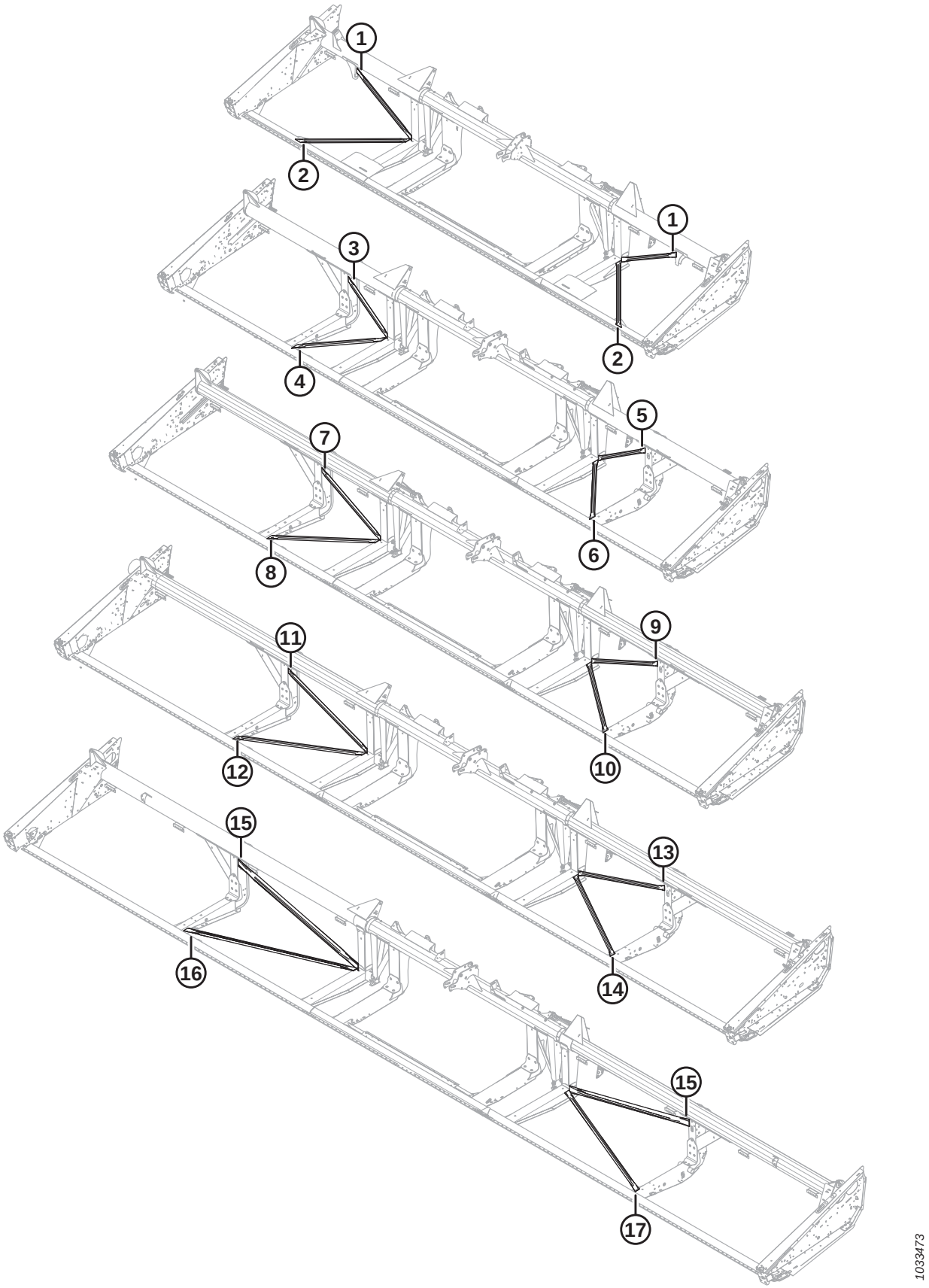

(OPTION) BRACE TUBE KITS

IMPORTANT:

Kits provided by MacDon Industries Ltd. in order to assist you in fixing damage caused by the end user to certain machinery manufactured by MacDon Industries Ltd. By receiving and installing these parts you assume all risk and liability of any nature arising out of the installation of this part. MacDon Industries Ltd. and its affiliates disclaim any and all liability arising from installation of this part. If installation of this part requires welding, such welding should be performed by an individual certified by an accredited institute in your jurisdiction with the necessary welding qualifications and/or certifications.

NOTE:

Brace kits can be used on single or double knife and regular or split frames.

Ref	Part Number	Description	Qty	Serial Number
1	326152	KIT – TUBE DIAG. BRACE, 25 FT FLEX, VERTICAL	2	
2	326153	KIT – TUBE DIAG. BRACE, 25 FT FLEX, HORIZONTAL	2	
3	294657	KIT – TUBE DIAG. BRACE, 30 FT FLEX, VERTICAL RH	1	
4	294658	KIT – TUBE DIAG. BRACE, 30 FT FLEX, HORIZONTAL RH	1	
5	294655	KIT – TUBE DIAG. BRACE, 30 FT FLEX, VERTICAL LH	1	
6	294656	KIT – TUBE DIAG. BRACE, 30 FT FLEX, HORIZONTAL LH	1	
7	294653	KIT – TUBE DIAG. BRACE, 35 FT FLEX, VERTICAL RH	1	
8	294654	KIT – TUBE DIAG. BRACE, 35 FT FLEX, HORIZONTAL RH	1	
9	294651	KIT – TUBE DIAG. BRACE, 35 FT FLEX, VERTICAL LH	1	
10	294652	KIT – TUBE DIAG. BRACE, 35 FT FLEX, HORIZONTAL LH	1	
11	294661	KIT – TUBE DIAG. BRACE, 40 FT FLEX, VERTICAL RH	1	
12	294669	KIT – TUBE DIAG. BRACE, 40 FT FLEX, HORIZONTAL RH	1	
13	294659	KIT – TUBE DIAG. BRACE, 40 FT FLEX, VERTICAL LH	1	
14	294660	KIT – TUBE DIAG. BRACE, 40 FT FLEX, HORIZONTAL LH	1	
15	294636	KIT – TUBE DIAG. BRACE, 45 FT FLEX, VERTICAL	2	
16	304547	KIT – TUBE DIAG. BRACE, 45 FT FLEX, HORIZONTAL RH	1	
17	304548	KIT – TUBE DIAG. BRACE, 45 FT FLEX, HORIZONTAL LH	1	

44 (Option) Crop Lifters

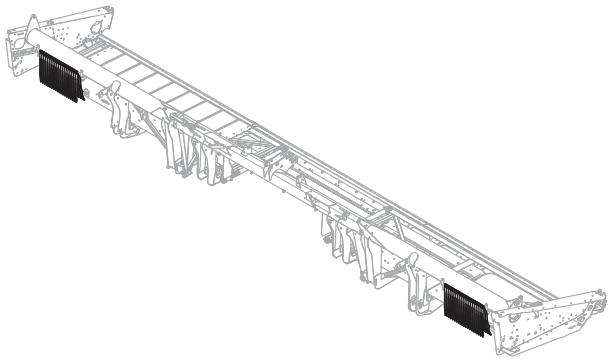

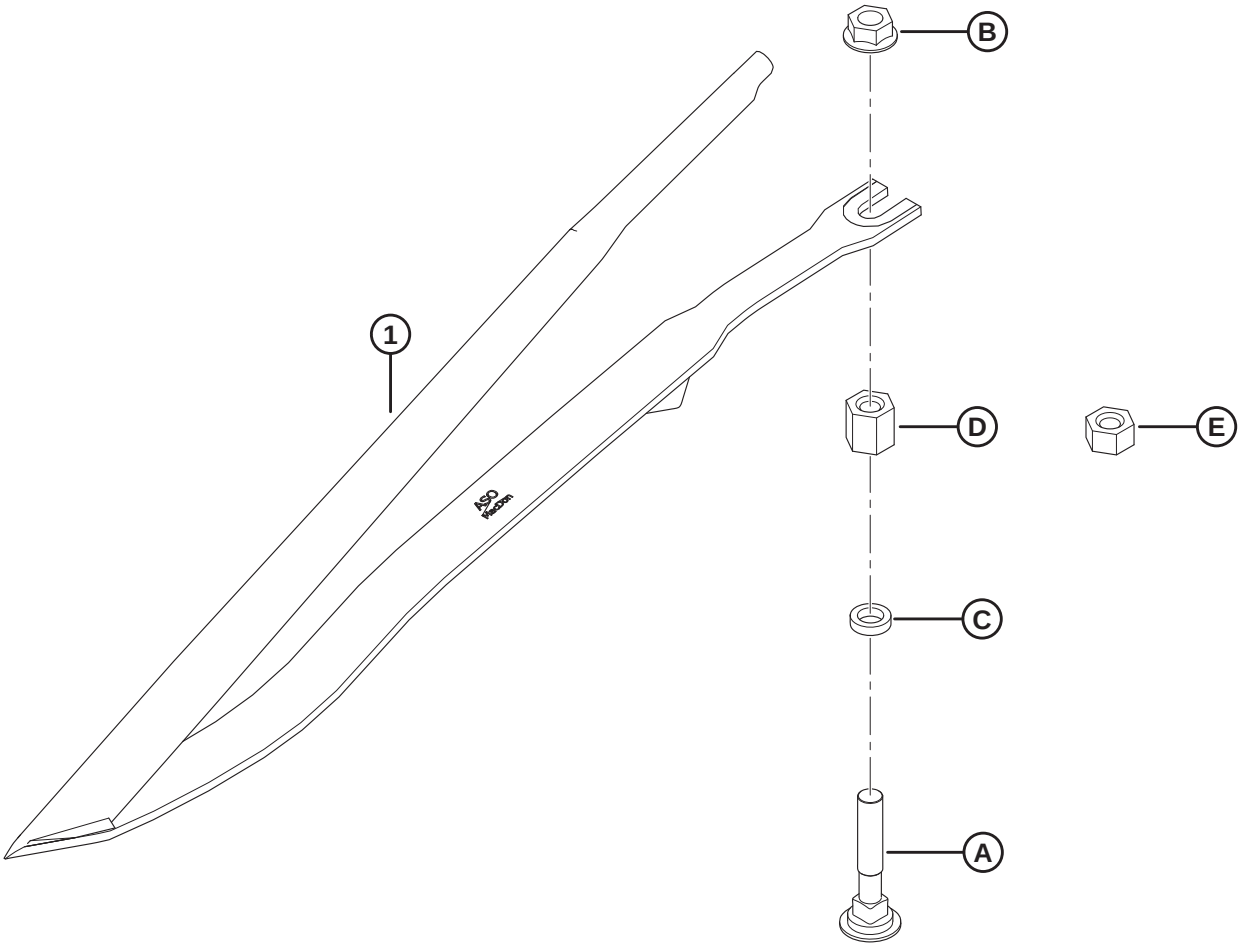

1020487

(OPTION) CROP LIFTERS

NOTE:

A single kit (MD #B6411) contains ten steel crop lifters (MD #255929) and hardware.

Ref	Part Number	Description	Qty	Serial Number
	B6411	KIT – CROP LIFTERS [160]		
1	255929	STEEL CROP LIFTER [161]	A/R	
A	279575	BOLT – RHSN 7/16-14 X 2.5-GR5-ZP		
B	21761	NUT – FLG SMOOTH FACE 1/16 NC GR 5 ZP		
C	255930	WASHER – FLAT		
D	255927	NUT – HEX COUPLING 7/16-14 20 MM LG [162]		
E	255928	NUT – HEX COUPLING 7/16-14 11 MM LG [163]		

160. Quantity of kits required varies depending on header width. Complete header quantities: 25–30 ft. = 3, 35–40 ft. = 4, 45 ft. = 5. Kits available through Whole Goods only with a new header. For existing headers, order steel crop lifters (MD #255929) and hardware A–E as required.
161. Complete header quantities: 25–30 ft. = 30, 35–40 ft. = 40, 45 ft. = 50.
162. For tracked combines.
163. For wheeled combines.

45 (Option) Crop Lifter Rack

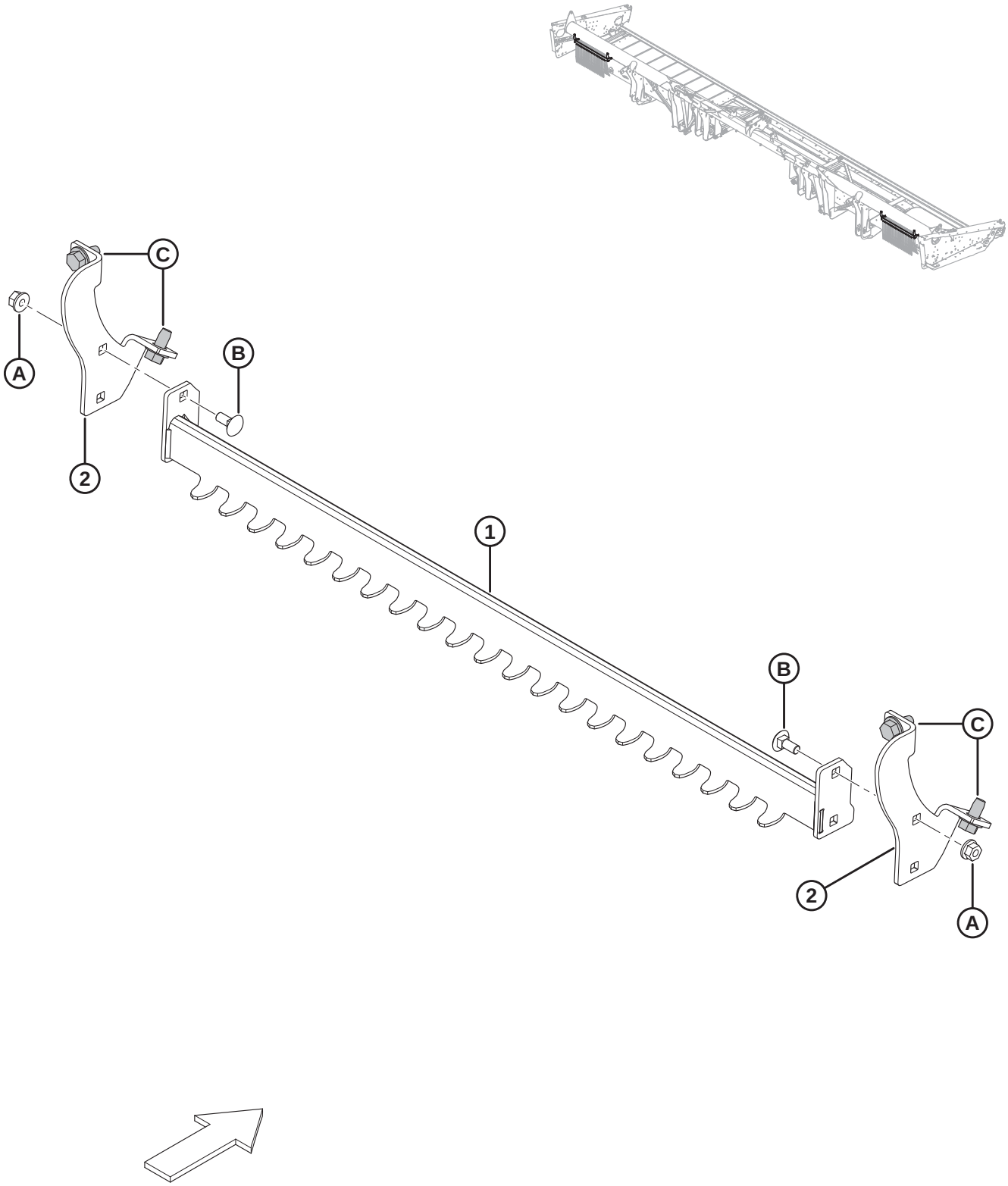

1020488

(OPTION) CROP LIFTER RACK

Ref	Part Number	Description	Qty	Serial Number
	B6376	CROP LIFTER RACK [164]		
1	279636	SUPPORT – LIFTER RACK WELDT	2	
2	279876	SUPPORT – LIFTER RACK	4	
A	152863	NUT – HEX FLG STVR LOC M8 X 1.25-10-AA2L		
B	197171	BOLT – RHSN M8 X 1.25 X 20-8.8-A2L		
C	136209	SCREW – HEX WASHER HD M10 X 1.5 X 20-450HV-A3L		

164. Kits available through Whole Goods only.

46 (Option) Foot Switch

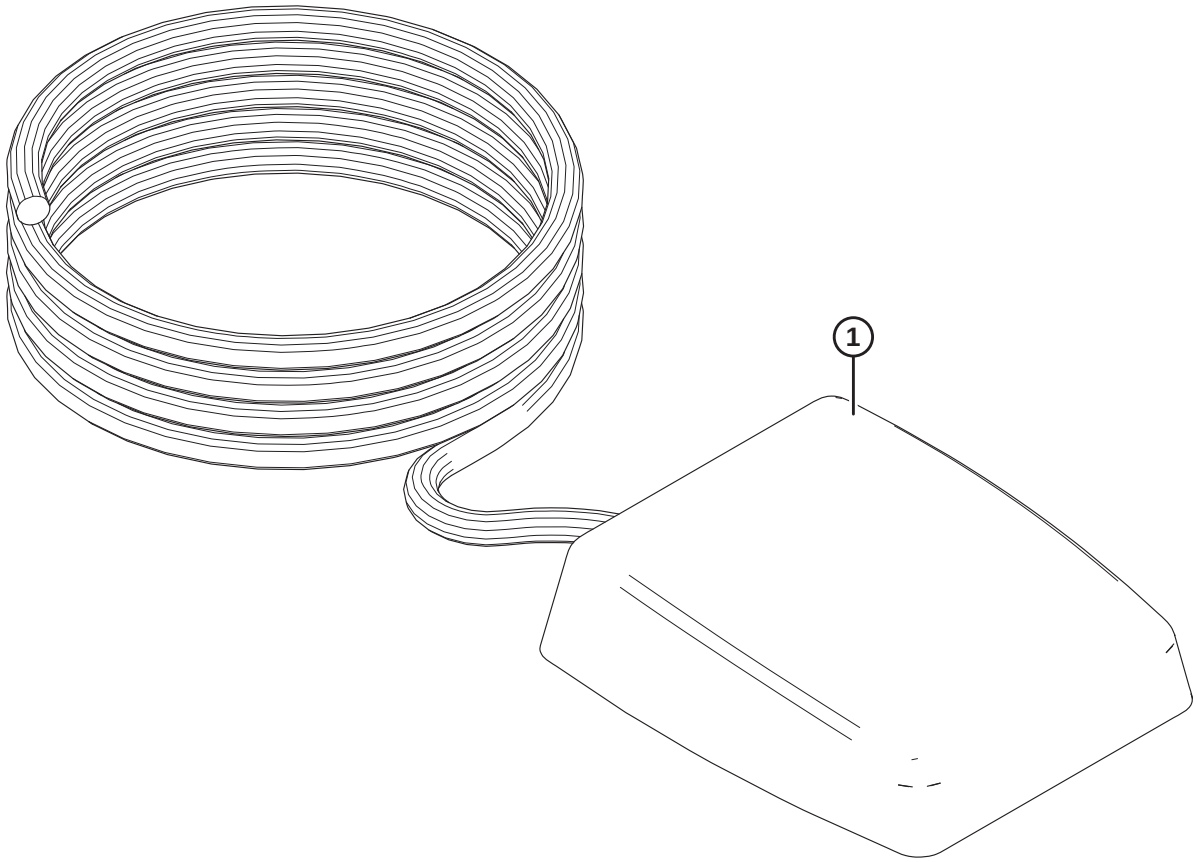

1026305

(OPTION) FOOT SWITCH

Ref	Part Number	Description	Qty	Serial Number
	B6212	KIT – HEADER TILT FOOT SWITCH [165]		
1	287537	KIT – FOOT SWITCH [166]	1	

165. Kits available through Whole Goods only.
166. Kit provides an additional way to control the selection between reel fore-aft and tilt on an AGCO (Challenger, Gleaner, or Massey Ferguson) or John Deere combine operating a MacDon FM100 Float Module and Draper or FlexDraper® header. The foot switch can be used to toggle the tilt functionality ON instead of using the existing selector switch. Kit includes foot switch and instructions.

47 (Option) Multi-Crop Rapid Reel Conversion Kit

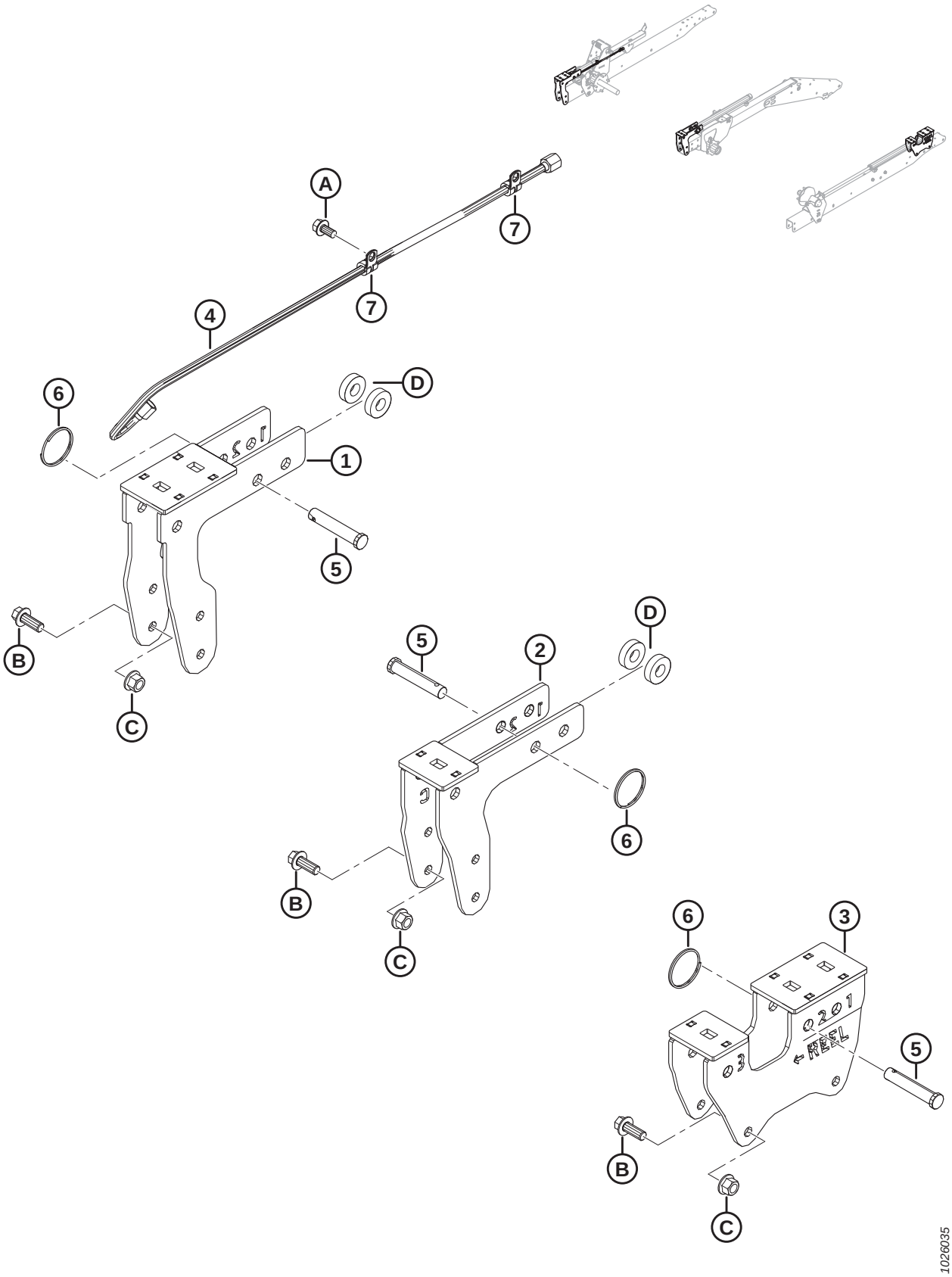

(OPTION) MULTI-CROP RAPID REEL CONVERSION KIT

Ref	Part Number	Description	Qty	Serial Number
	B6590	KIT – MULTI-CROP RAPID REEL CONVERSION [167]		
1	294598	BRACKET – RHS CAM BRACKET	1	
2	294601	BRACKET – CENTER CAM BRACKET	1	
3	294599	BRACKET – LHS CAM BRACKET	1	
4	245362	HOSE – HYD, 0.25 IN. I.D., 950 MM LG, 100R17, METAL REIN.	1	
5	18624	PIN – CLEVIS, 15.71 MM, 70 MM, ZN PL	3	
6	118137	RING – EXTERNAL, 2 INCH, .087	3	
7	135233	CLAMP – DOUBLE HOSE INSULATED	2	
A	101898	SCREW – HEX WASH HD THD ROLLING 3/8 NC X 5/8		
B	148798	BOLT – HEX FLG HD M12 X 1.75 X 30-10.9-A3L		
C	136431	NUT – HEX FLG CTR LOC M12 X 1.75-10-A3L		
D	40915	WASHER – FLAT		

167. Kit required to reduce the time needed to change the reel position from current location to the rapeseed/canola position. Intended for our Western European and North American markets, where straight-cut canola applications are required. Includes all listed parts and instructions. Kits available through Whole Goods only.

48 (Option) Pick-up Reel-End Fingers Kit

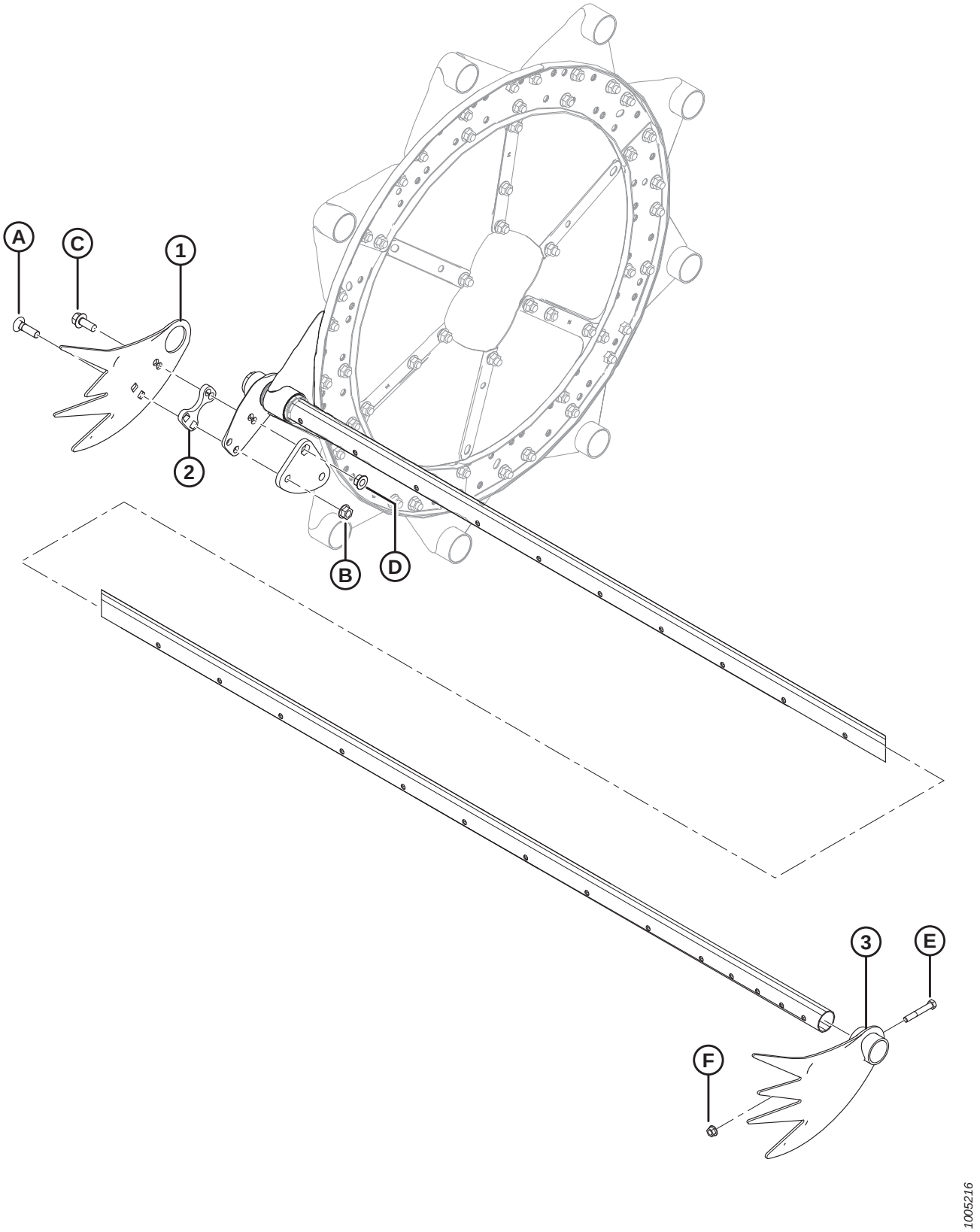

(OPTION) PICK-UP REEL-END FINGERS KIT

NOTE:

Kit is **NOT** compatible on the left end of FD125 Headers.

Ref	Part Number	Description	Qty	Serial Number
	B4831	KIT – PICK-UP REEL, END FINGERS [168]		
1	137794	FINGER – LODGED CROP, CAM END	3	
2	137795	SHIM – LODGED CROP FINGER	3	
3	137924	FINGER – LODGED CROP, TAIL END	3	
A	30515	BOLT – RHSN, 1/2 NC X 1-3/4, GR 5		
B	50186	NUT – LOCK, SMOOTH FLANGE, 1/2 NC DT		
C	30368	BOLT – FLANGE HEAD 1/2 NC X 1-1/4 GR 5		
D	21383	NUT – SERRATED FLANGE LOCK, 1/2 NC		
E	21102	BOLT – HEX HD 3/8 NC X 2-1/2 GR 5		
F	30228	NUT – LOCK, SMOOTH FLG, 3/8 NC, DT		

168. Kits available through Whole Goods only.

49 (Option) Pointed Guard Kit, Single Knife

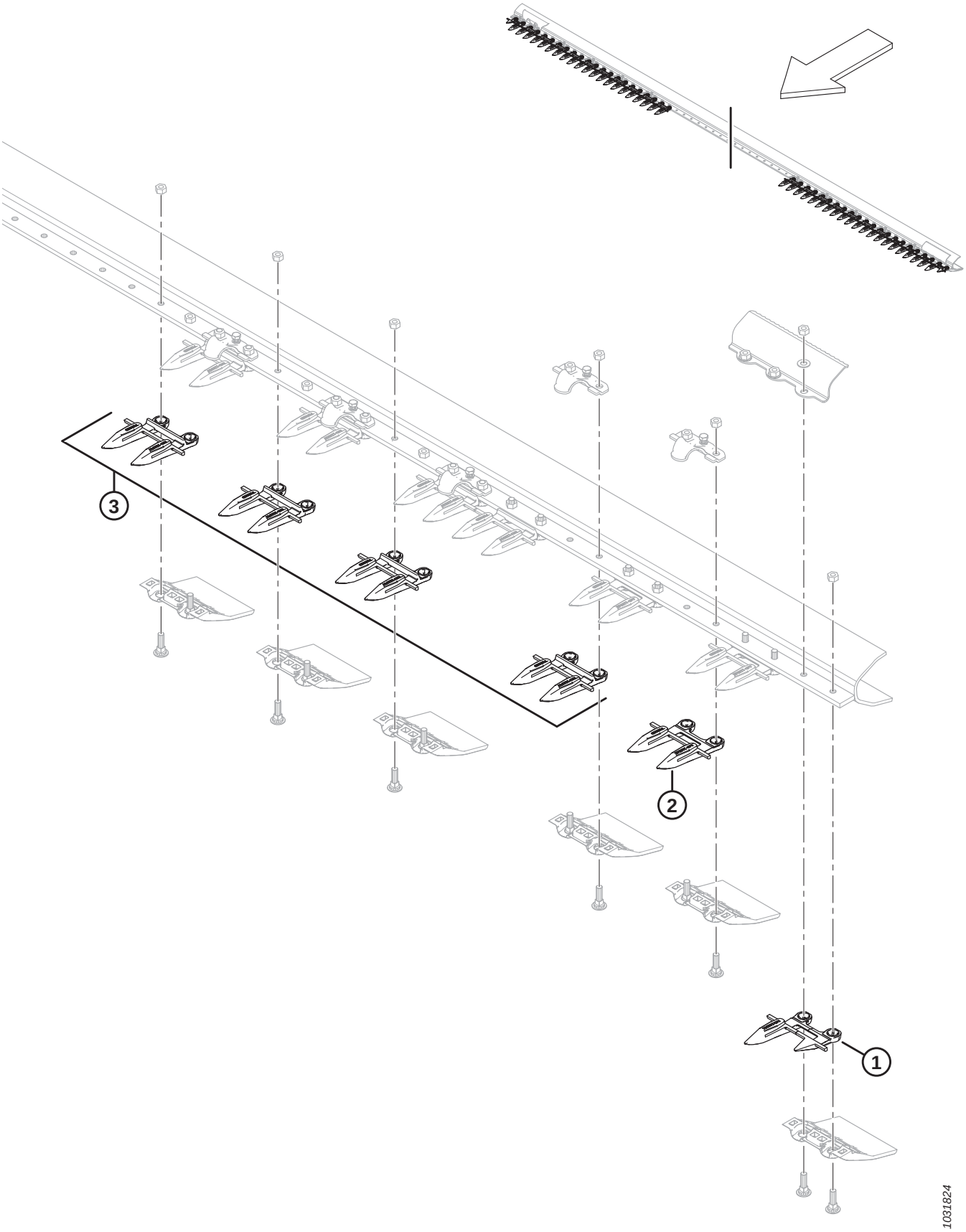

(OPTION) POINTED GUARD KIT, SINGLE KNIFE

NOTE:

Illustration; Left end shown (right end is similar). Single knife, pointed guards only.

Ref	Part Number	Description	Qty	Serial Number
	304990	KIT – POINTED GUARDS 25 FT SK [169]		
	304991	KIT – POINTED GUARDS 30 FT SK [169]		
	304992	KIT – POINTED GUARDS 35 FT SK [169]		
	304993	KIT – POINTED GUARDS 40 FT SK [169]		
1	118301	SICKLE GUARD – LH, OUTBOARD (DRIVE END)	1	
	118302	SICKLE GUARD – RH, OUTBOARD	1	
2	118345	SICKLE GUARD – W/ POINTS, W/O WEARBAR (DRIVE END)	3	
3	118344	SICKLE GUARD – W/ POINTS [170]		

169. Includes all listed parts.
170. Quantities per kit: 25 ft. = 45, 30 ft. = 55, 35 ft. = 65, 40 ft. = 75.

50 (Option) Pointed Guard Kit, Double Knife

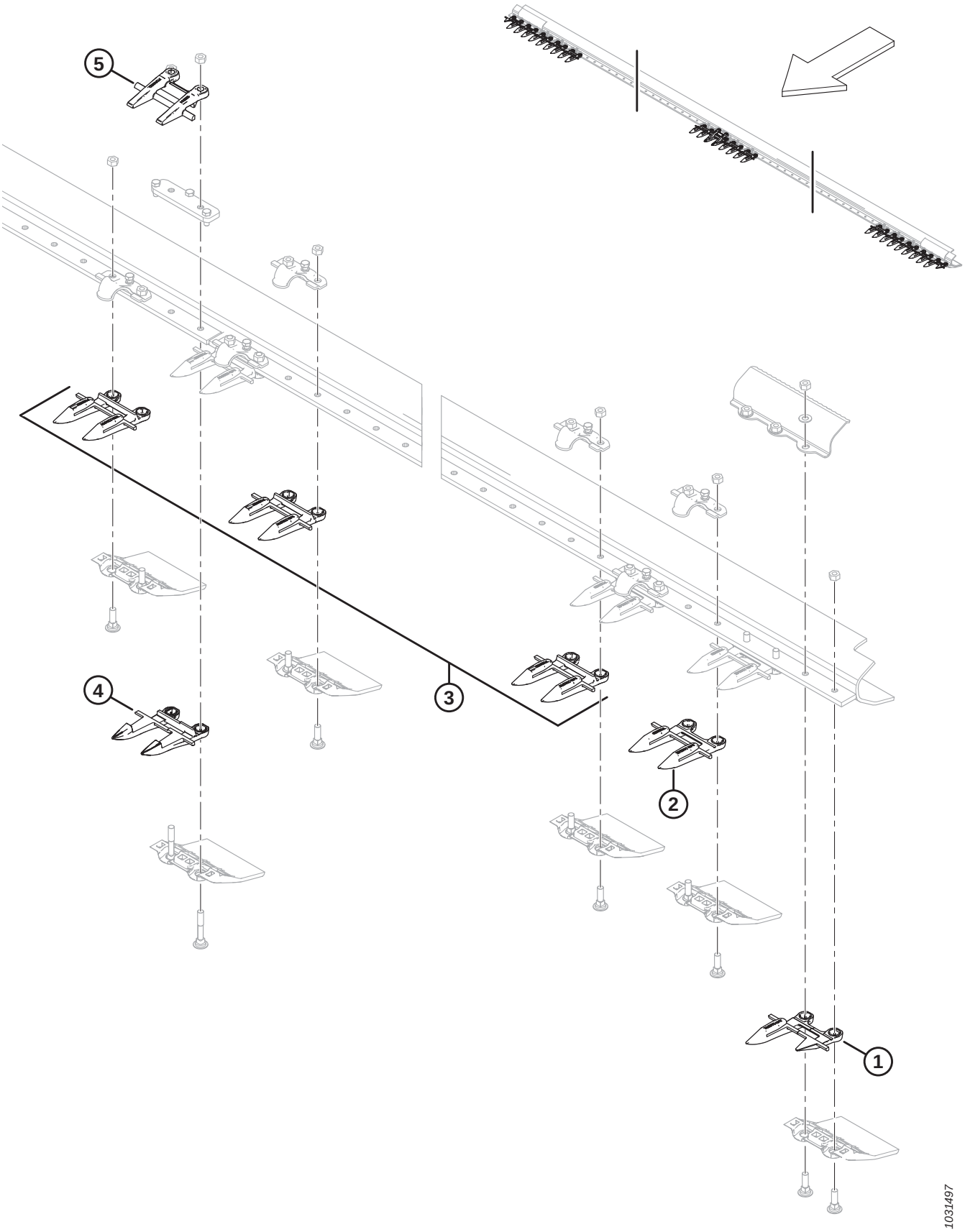

(OPTION) POINTED GUARD KIT, DOUBLE KNIFE

NOTE:

Illustration; Left end and middle shown (right end is similar). Double knife, pointed guards only.

Ref	Part Number	Description	Qty	Serial Number
	304985	KIT – POINTED GUARDS 25 FT DK [171]		
	304986	KIT – POINTED GUARDS 30 FT DK [171]		
	304987	KIT – POINTED GUARDS 35 FT DK [171]		
	304988	KIT – POINTED GUARDS 40 FT DK [171]		
	304989	KIT – POINTED GUARDS 45 FT DK [171]		
1	118301	SICKLE GUARD – LH, OUTBOARD	1	
	118302	SICKLE GUARD – RH, OUTBOARD	1	
2	118345	SICKLE GUARD – W/ POINTS, W/O WEARBAR (3 PER END)	6	
3	118344	SICKLE GUARD – W/ POINTS [172]		
4	124338	SICKLE GUARD – CENTER, POINTED	1	
5	124344	GUIDE – TOP-CENTER	1	

171. Includes all listed parts.
172. Quantities per kit: 25 ft. = 41, 30 ft. = 51, 35 ft. = 61, 40 ft. = 71, 45 ft. = 81.

51 (Option) Reel Arm Extension Kit

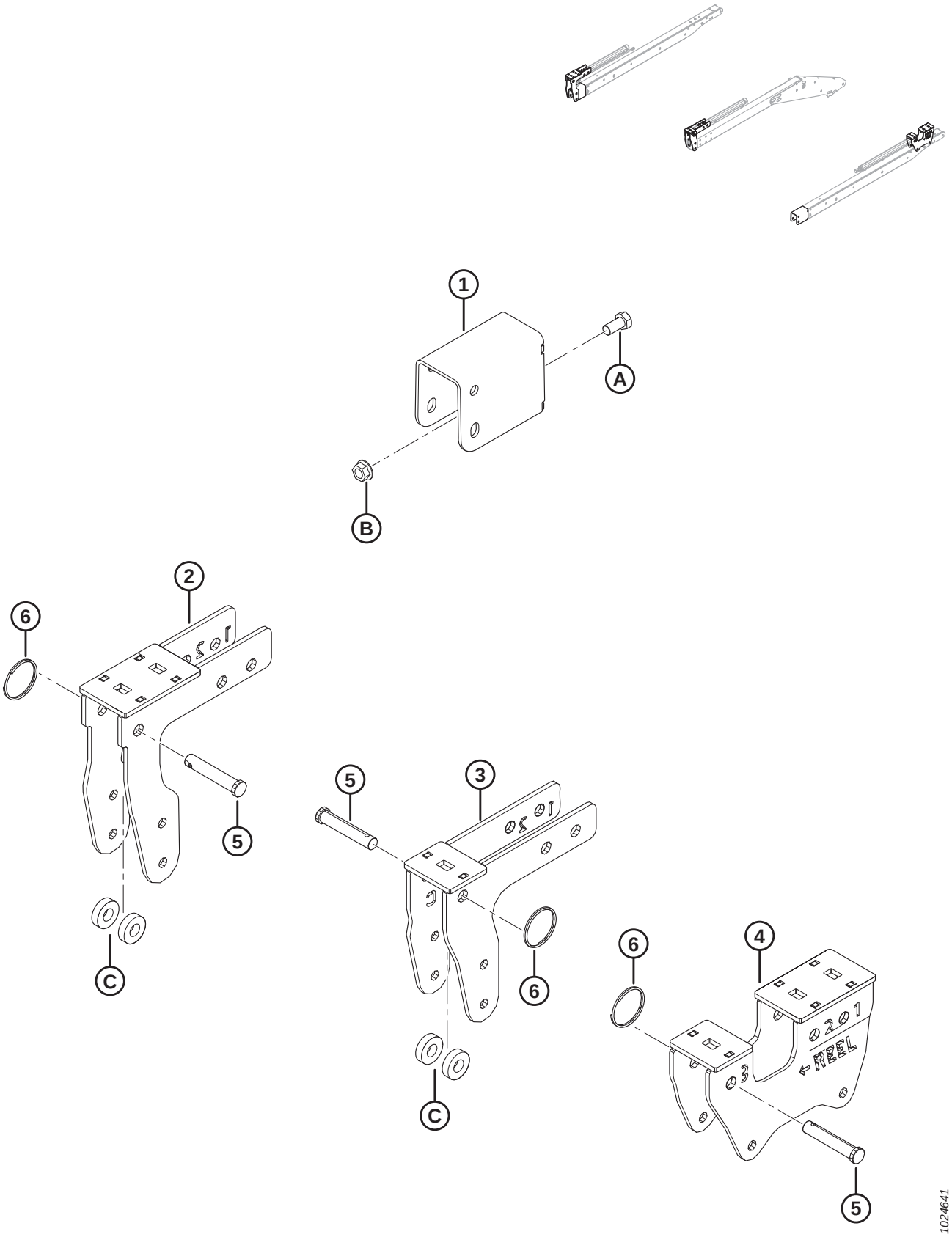

(OPTION) REEL ARM EXTENSION KIT

NOTE:

Reel Arm Extension Kit (MD #B6591) is **NOT** compatible with Vertical Knife Mounts (MD #B6137 and B6138).

Ref	Part Number	Description	Qty	Serial Number
	B6591	KIT – REEL ARM EXTENSION (EXPORT ONLY) [173]		
1	245926	SUPPORT WELDMENT	2	
2	294598	BRACKET – RHS CAM WELDT	1	
3	294601	BRACKET – CENTER CAM WELDT	1	
4	294599	BRACKET – LHS CAM WELDT	1	
5	18624	PIN – CLEVIS, 15.71 MM, 70 MM, ZN PL	3	
6	118137	RING – EXTERNAL, 2 INCH, .087	3	
A	21575	BOLT – HH 1/2 NC X 1.0 LG GR 5 ZP		
B	50186	NUT – FLG LOCK SMTH FACE DT 0.500-13 UNC GR 5		
C	40915	WASHER – FLAT		

173. Kit provides extended reel fore/aft range (from furthest forward to furthest rearward) on headers equipped with short reel arms. Kit includes all listed parts and instructions. Kits available through Whole Goods only.

52 (Option) Rice Divider Rods

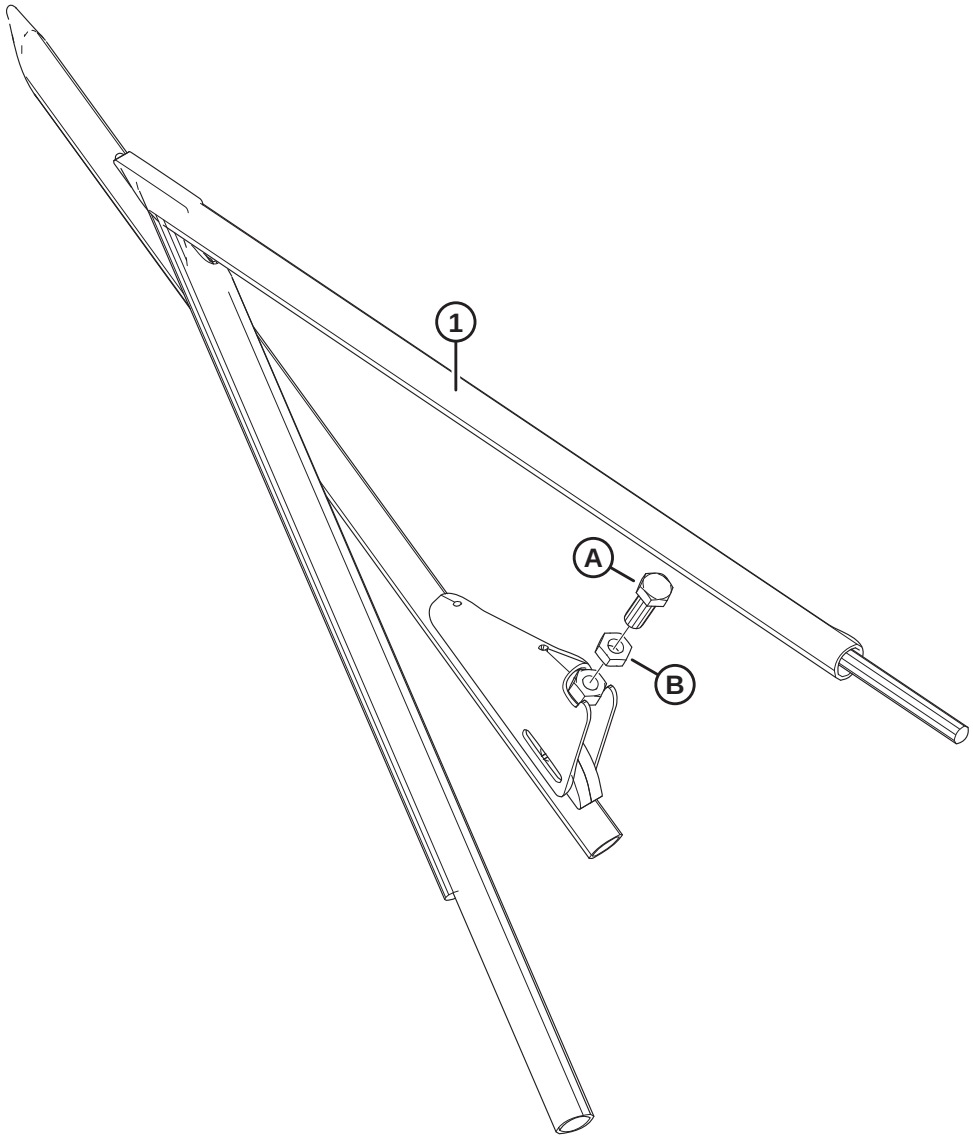

1035123

(OPTION) RICE DIVIDER RODS

Ref	Part Number	Description	Qty	Serial Number
	B5609	KIT – RICE DIVIDER RODS [174]		
1	123681	DIVIDER – RICE LH TUBE WELDT	1	
	123682	DIVIDER – RICE RH TUBE WELDT	1	
A	172875	SCREW – SET		
B	21056	NUT – HEX JAM 1/2-13 UNC GR 5 ZP		

174. Kits available through Whole Goods only.

53 (Option) Rock Retarder Kit

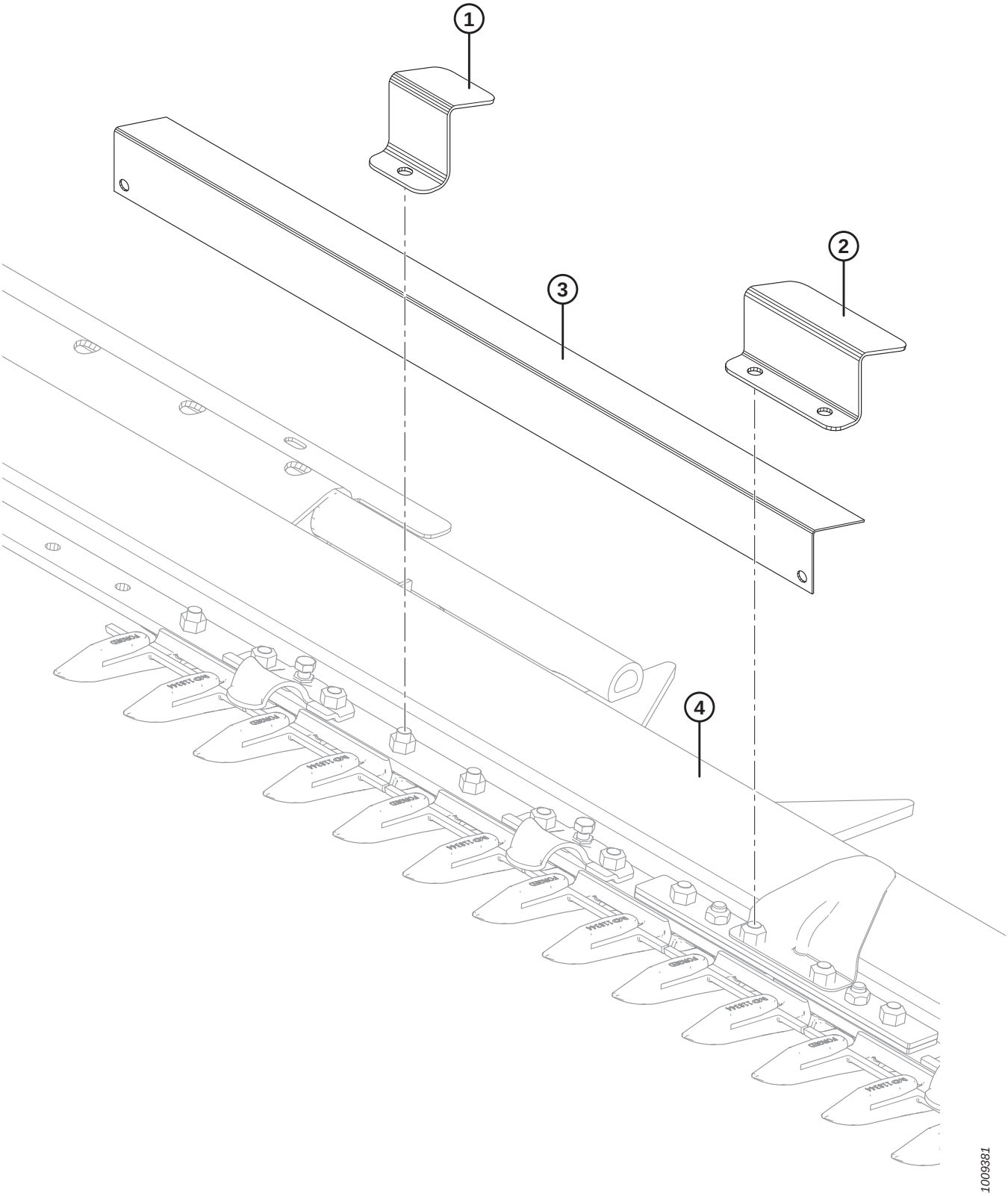

(OPTION) ROCK RETARDER KIT

Ref	Part Number	Description	Qty	Serial Number
	B5084	KIT – ROCK RETARDER (25–35 FT HEADER) [175]		
	B5085	KIT – ROCK RETARDER (40–45 FT HEADER) [175]		
1	129577	SUPPORT – ROCK RETARDER CLAMP [176]		
2	129578	SUPPORT – ROCK RETARDER CLAMP [177]	2	
3	129581	SUPPORT – ROCK RETARDER, 990 MM LONG	3	
	129582	SUPPORT – ROCK RETARDER, 913 MM LONG	4	
	129584	SUPPORT – ROCK RETARDER, 888 MM LONG	2	
	129589	SUPPORT – ROCK RETARDER, 1066 MM LONG	2	
4	REF	CUTTERBAR		

175. Kits available through Whole Goods only.
176. Quantities: 25–35 ft. = 32, 40–45 ft. = 40.
177. For use at flex joint.

54 (Option) Short Brace Kit for Center Reel Arm / Divider Latches

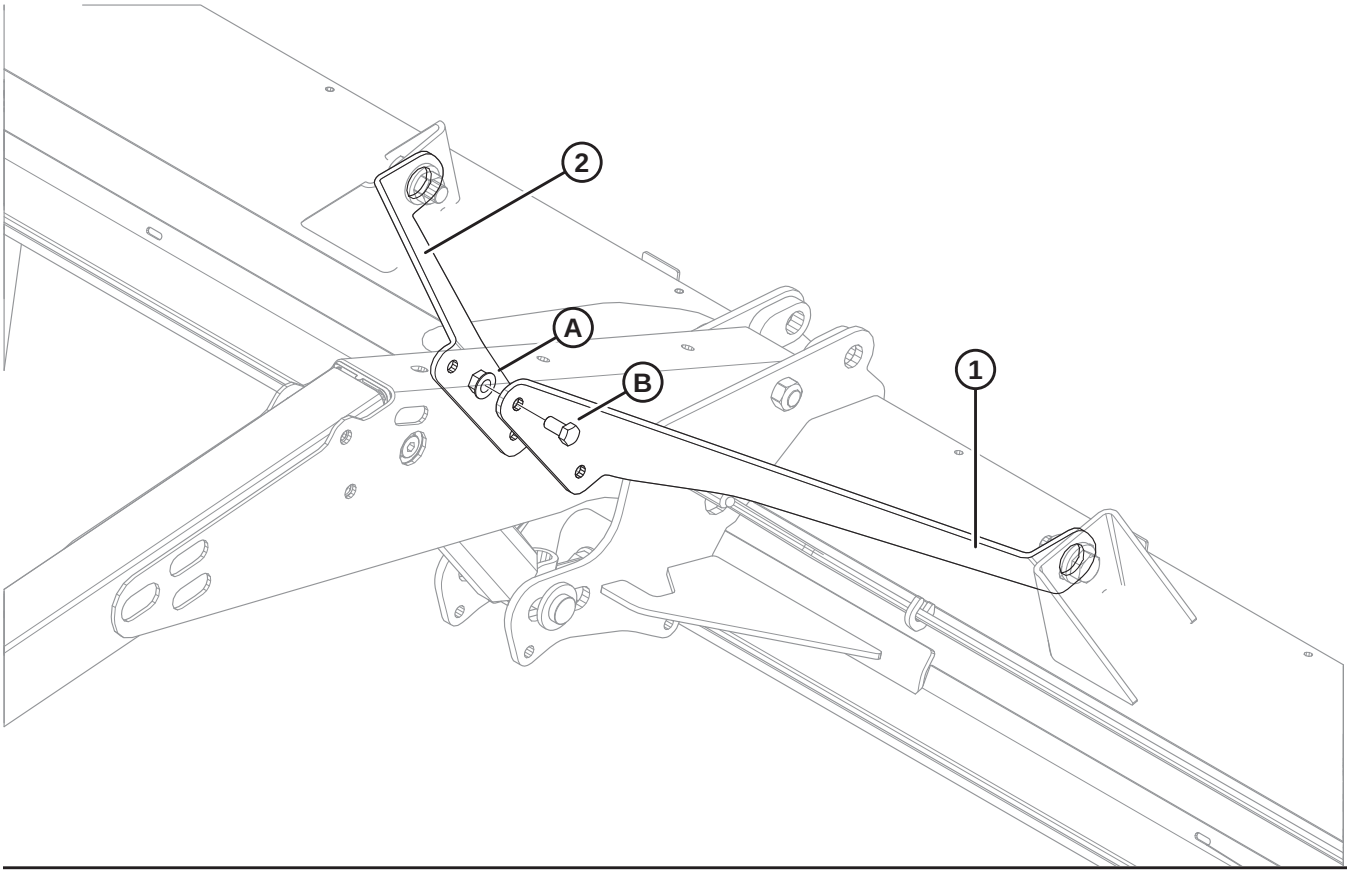

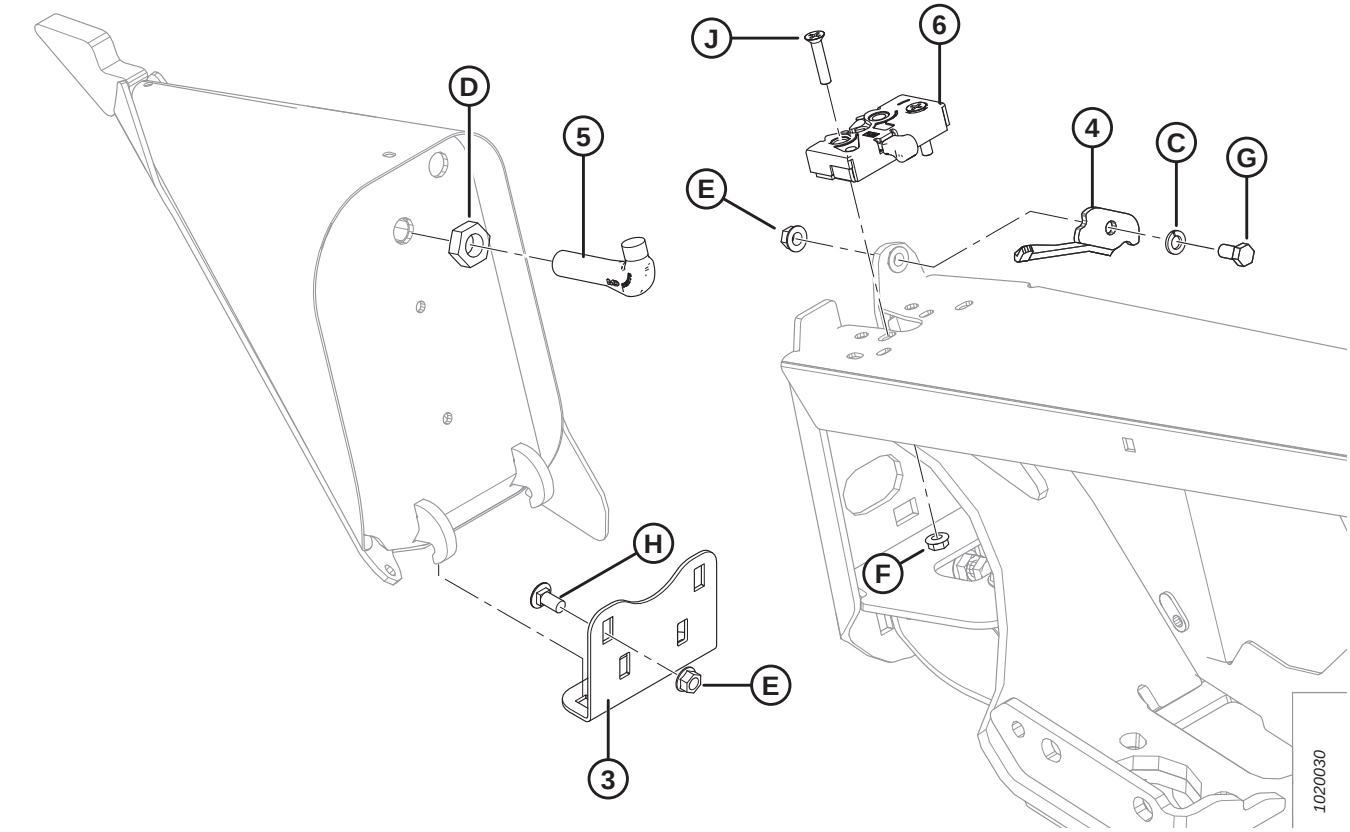

(OPTION) SHORT BRACE KIT FOR CENTER REEL ARM / DIVIDER LATCHES

Ref	Part Number	Description	Qty	Serial Number
	B5605	KIT – SHORT BRACE FOR CENTER REEL ARM [178]		
1	164825	BRACE – SHORT LH	1	
2	164800	BRACE – SHORT RH	1	
A	50186	NUT – FLANGE LOCK SM FACE DT 0.500-13 UNC GR 5		
B	21575	BOLT – HH 1/2 NC X 1.0 LG GR 5 ZP		
	B6158	KIT – DIVIDER LATCHES [178]		
3	255791	ANGLE – DIVIDER, STORAGE [179]	2	
4	132248	LATCH – LH, DIVIDER SAFETY	1	
	132253	LATCH – RH, DIVIDER SAFETY	1	
5	132773	HOOK – DIVIDER LATCH	2	
6	120932	LATCH – LH	1	
	120933	LATCH – RH	1	
C	18637	WASHER – REG. LOCK 3/8 IN. NOM. I.D. ZP		
D	7674	NUT – HEX JAM 3/4-16 UNF GR 5 ZP		
E	30228	NUT – FLANGE DT SMOOTH FACE 0.375-16 UNC		
F	30280	NUT – FLG SIDE LK SMTH FACE 5/16 NC GR 5 ZP		
G	21567	BOLT – HEX HD .375-16 UNC X 0.75 LG		
H	21863	BOLT – RHSSN 3/8 NC X 0.75 LG GR 5 ZP		
J	30504	SCREW – FLAT CSK MACH 5/16 NC X 1-1/2 LG GR 5 ZP		

178. Kits available through Whole Goods only.
179. Used to store divider on header endsheet when divider is not in use. For mounting position on header endsheet, refer to Section *1 Header Frame, Dividers, and Shields, page 1*.

55 (Option) Slow Speed Transport Package – Hitch Electrical

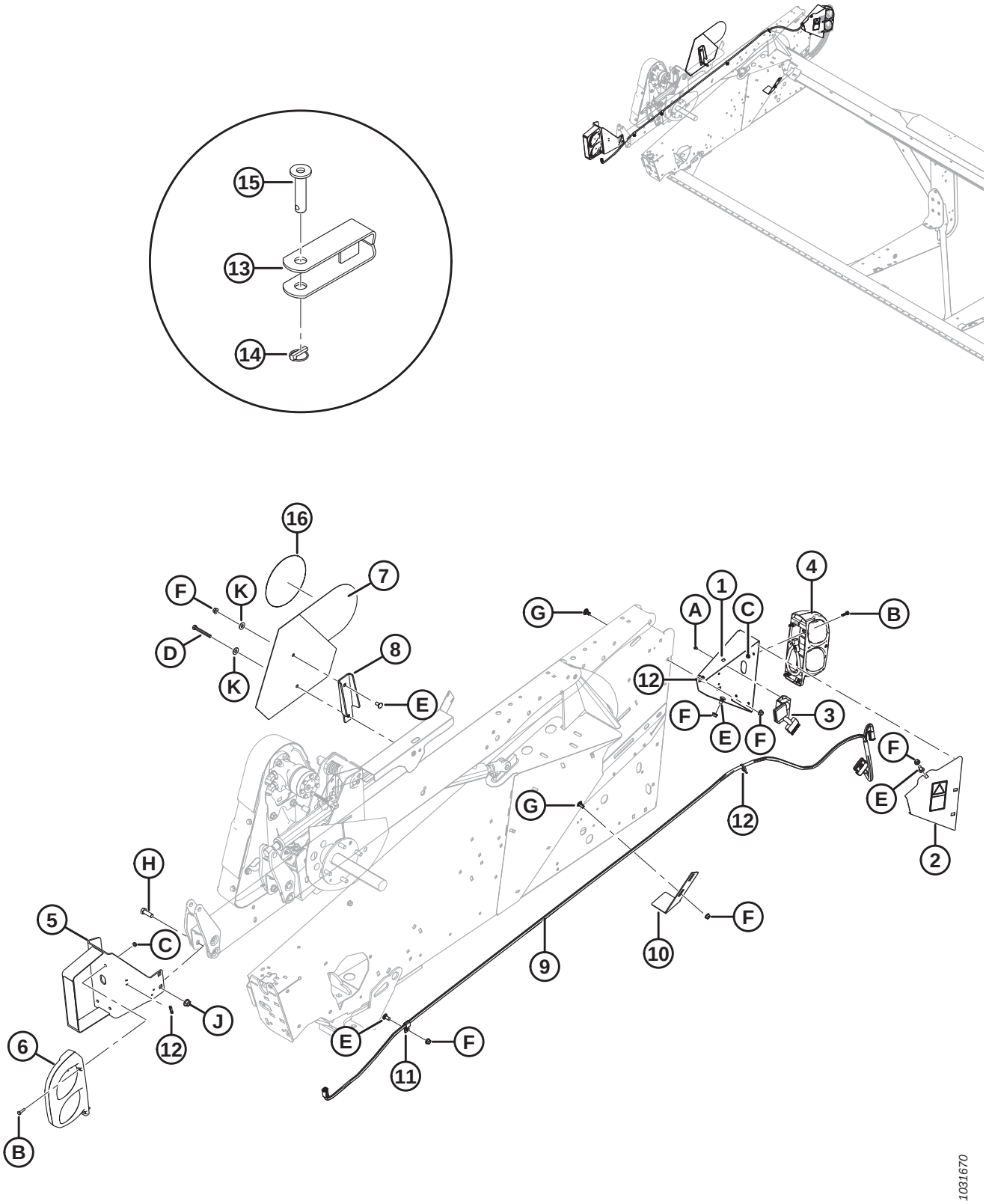

(OPTION) SLOW SPEED TRANSPORT PACKAGE – HITCH ELECTRICAL

Ref	Part Number	Description	Qty	Serial Number
	B6606	KIT – TRANSPORT LIGHTS AND HARNESS (NORTH AMERICA AND AUSTRALIA) [180]		
	B6607	KIT – TRANSPORT LIGHTS AND HARNESS (EUROPE) [180]		
1	244727	SUPPORT – LH TRANSPORT LIGHT	1	
2	274414	COVER – WITH SAFETY DECAL [181]	1	
3	171068	RELAY – TRANSPORT LIGHTING MODULE [182]	1	
4	138087	LAMP – STOP/TURN/TAIL [183]	1	
5	294392	SUPPORT – SST RH REAR LIGHT	1	
	115146	REFLECTOR – AMBER	A/R	
	115147	REFLECTOR – RED	A/R	
6	138086	LAMP – STOP/TURN/TAIL [183]	1	
	139630	LENS – AMBER	1	
	139631	LENS – RED	1	
	139632	LENS – BLACK (OPAQUE)	1	
	139633	LENS – CLEAR (RUSSIAN)	1	
7	258262	ASSY – BRACKET W/ SMV [184]	1	
	115148	DECAL – SMV [182]	1	
	258253	BRACKET – SPEED ID SYMBOL (EUROPE) [185]	A/R	
8	174926	BRACKET – SMV MOUNTING	1	
9	254175	HARNESS	1	
10	253500	SUPPORT – DIVIDER ROD LOWER	1	
11	135233	CLAMP – DOUBLE HOSE INSULATED	2	
12	21763	FASTENER – CABLE TIE (BLACK)	3	
13	113536	CLEVIS WELDT [182]	1	
14	113561	PIN – LYNCH [182]	1	
15	118239	PIN – HITCH [182]	1	
16	193241	DECAL – SIS, 30 KM/H	1	
	193243	DECAL – SIS, 30 KM/H (SMALL)	1	
	193242	DECAL – SIS, 20 MILE/H	1	
	193240	DECAL – SIS, 20 MILE/H (SMALL)	1	
A	136868	RIVET – BLIND		
B	21573	BOLT – HEX HD 1/4 NC X 1.0 LG GR 5 ZP		
C	21455	NUT – FLG (SER FACE) 1/4 NC GR 5 ZP		
D	21568	BOLT – HH 3/8 NC X 3.0 LG GR 5 ZP (SINGLE REEL)		
	21102	BOLT – HH 3/8 NC X 2.5 LG GR 5 ZP (DOUBLE REEL)		

180. Kits available through Whole Goods only.
181. Includes decal (MD #184422).
182. For B6606 only.
183. Turn, tail, and brake bulbs not sold by MacDon, but can be replaced with red (tail/brake) bulb - 1077, and amber (turn) bulb - 7506.
184. Includes SMV decal (MD #115148). For B6606 only.
185. For B6607 only.

(OPTION) SLOW SPEED TRANSPORT PACKAGE – HITCH ELECTRICAL

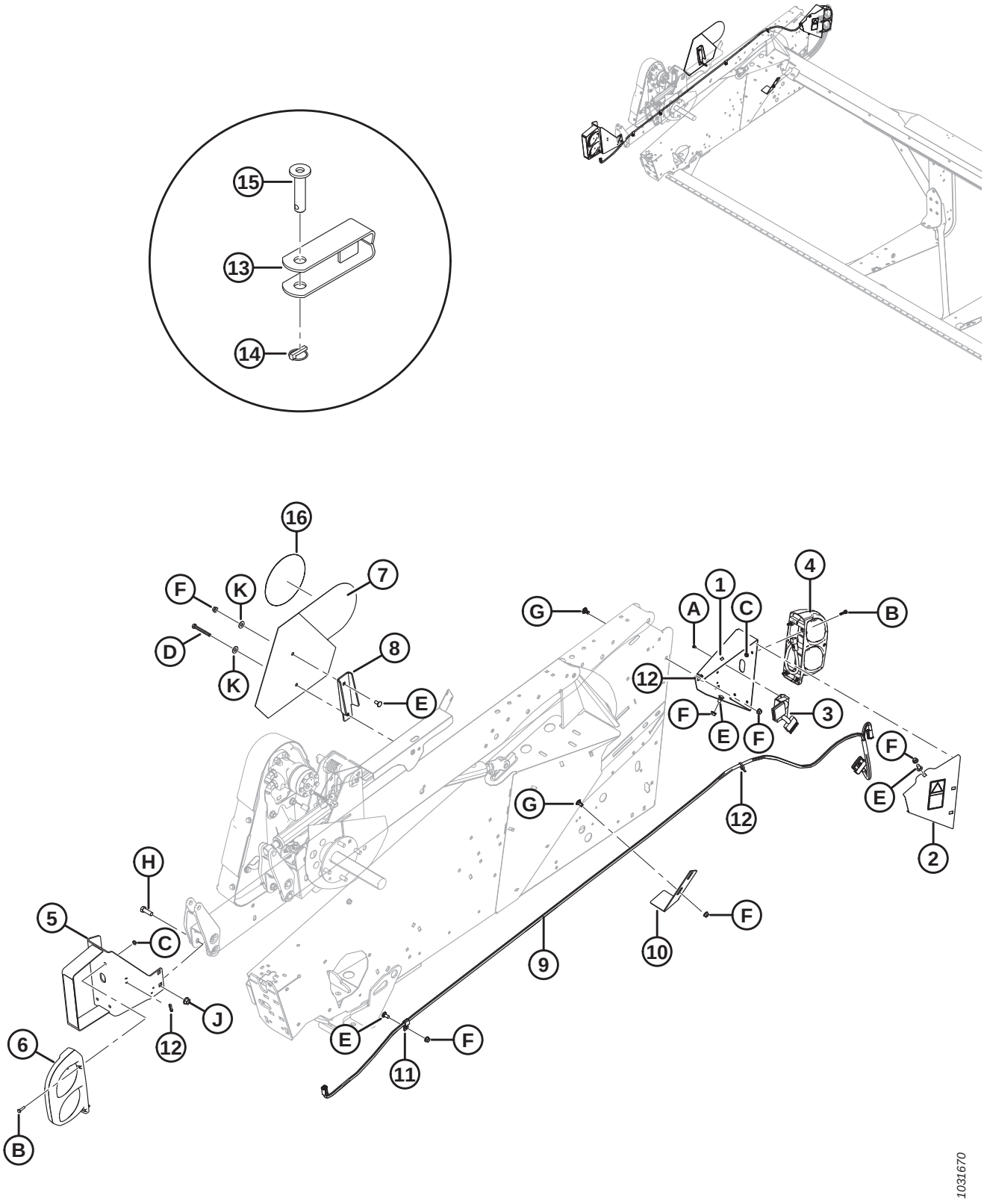

(OPTION) SLOW SPEED TRANSPORT PACKAGE – HITCH ELECTRICAL

Ref	Part Number	Description	Qty	Serial Number
E	21863	BOLT – RHSSN 3/8 NC X 0.75 LG GR 5 ZP		
F	30228	NUT – FLANGE DT SMOOTH FACE 0.375-16 UNC		
G	21472	BOLT – RHSN 3/8 NC X 0.75 GR 5 ZP		
H	18723	BOLT – HH 1/2 NC X 1.5 LG TFL GR 5 ZP		
J	50186	NUT – FLG LOCK SM FACE DT 0.500-13 UNC GR 5		
K	18670	WASHER – FLAT SAE 7/16 I.D. X 1.0 IN. O.D. AA1J [186]		

186. For B6606 only.

56 (Option) Slow Speed Transport Package – Transport Hitch

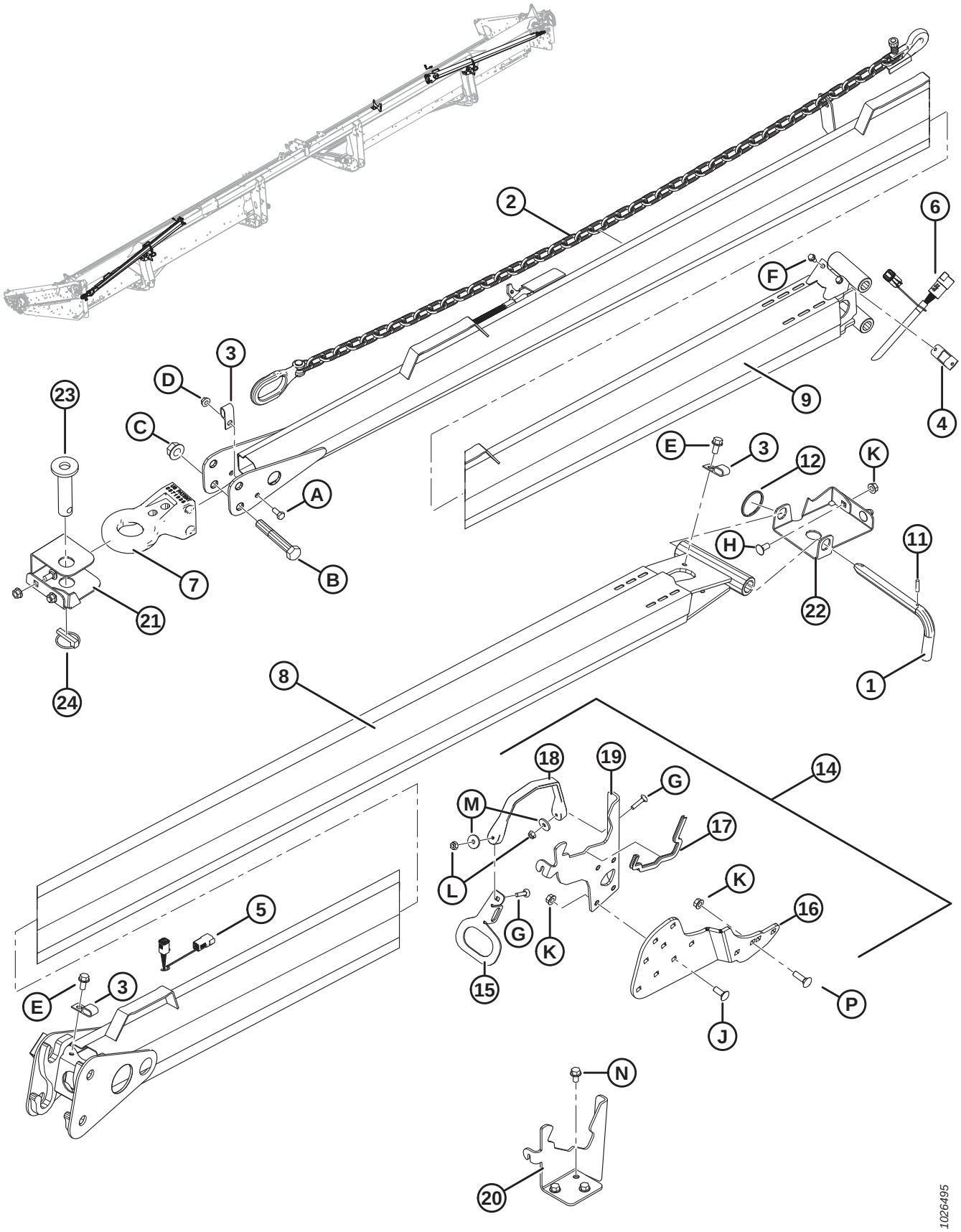

(OPTION) SLOW SPEED TRANSPORT PACKAGE – TRANSPORT HITCH

Ref	Part Number	Description	Qty	Serial Number
	B6145	KIT – TRANSPORT (TOW POLE) [187]		
1	144415	ASSY – L-PIN	1	
2	21404	CHAIN – SAFETY 59 LG	1	
3	39272	CLIP – INSULATED	2	
4	193057	CLIP – WIRING HARNESS DEUTSCH CONNECTOR	1	
5	193059	HARNESS – TRANSPORT HITCH (HEADER END)	1	
6	193058	HARNESS – TRANSPORT HITCH (TOW END)	1	
7	113566	HITCH BASE	1	
8	193202	HITCH – WELDT (HEADER END)	1	
9	193212	HITCH – C/W DECALS (TOW END) [188]	1	
11	16010	PIN – SPRING 3/16 DIA X 1.0 LG	1	
12	118137	RING	1	
14	294815	KIT – HITCH STORAGE ON HEADER	1	
15	193183	PLATE – LATCH HANDLE	2	
16	294807	ANGLE – SUPPORT	2	
17	135704	SEAL – EDGE TRIM	2	
18	193187	STRAP – RUBBER	2	
19	244760	SUPPORT – HITCH CRADLE	2	
20	220326	SUPPORT – HITCH CRADLE	1	
21	193188	SUPPORT – HITCH LH ENDSHEET	1	
22	279065	SUPPORT – HITCH RH ENDSHEET	1	
23	118239	PIN – HITCH	1	
24	113561	PIN – LYNCH	1	
A	21558	BOLT – HEX HD 5/16 NC X 0.75 LG GR 5 ZP		
B	19634	BOLT – HH 5/8 NC X 4.0 LG GR 5 ZP		
C	50225	NUT – FLANGE DT SMOOTH FACE .625-11 UNC		
D	30280	NUT – FLG SIDE LK SMTH FACE 5/16 NC GR 5 ZP		
E	101897	SCREW – HEX WASH HD THD ROLLING 3/8 NC X 3/4		
F	21055	SCREW – SELF TAP HEX WASH HD 1/4 NC X 1/2		
G	135623	BOLT – RHSN 1/4 NC X 1.25 LG GR 5 ZP		
H	21863	BOLT – RHSSN 3/8 NC X 0.75 LG GR 5 ZP		
J	100456	BOLT – RHSSN 3/8 NC X 1.0 GR 5 ZP		
K	30228	NUT – FLANGE DT SMOOTH FACE 0.375-16 UNC		
L	135248	NUT – FLG DT SMTH FACE 1/4-20 NC GR 5 ZP		
M	40628	WASHER – FLAT		
N	101898	SCREW – HEX WASH HD THD ROLLING 3/8 NC X 5/8		
P	19966	BOLT – RHSN 3/8-16 X 1.25 GR 5 ZP		

187. Kits available through Whole Goods only.
188. Includes decals (MD #220797, 220798).

57 (Option) Slow Speed Transport Package – Wheels and Supports

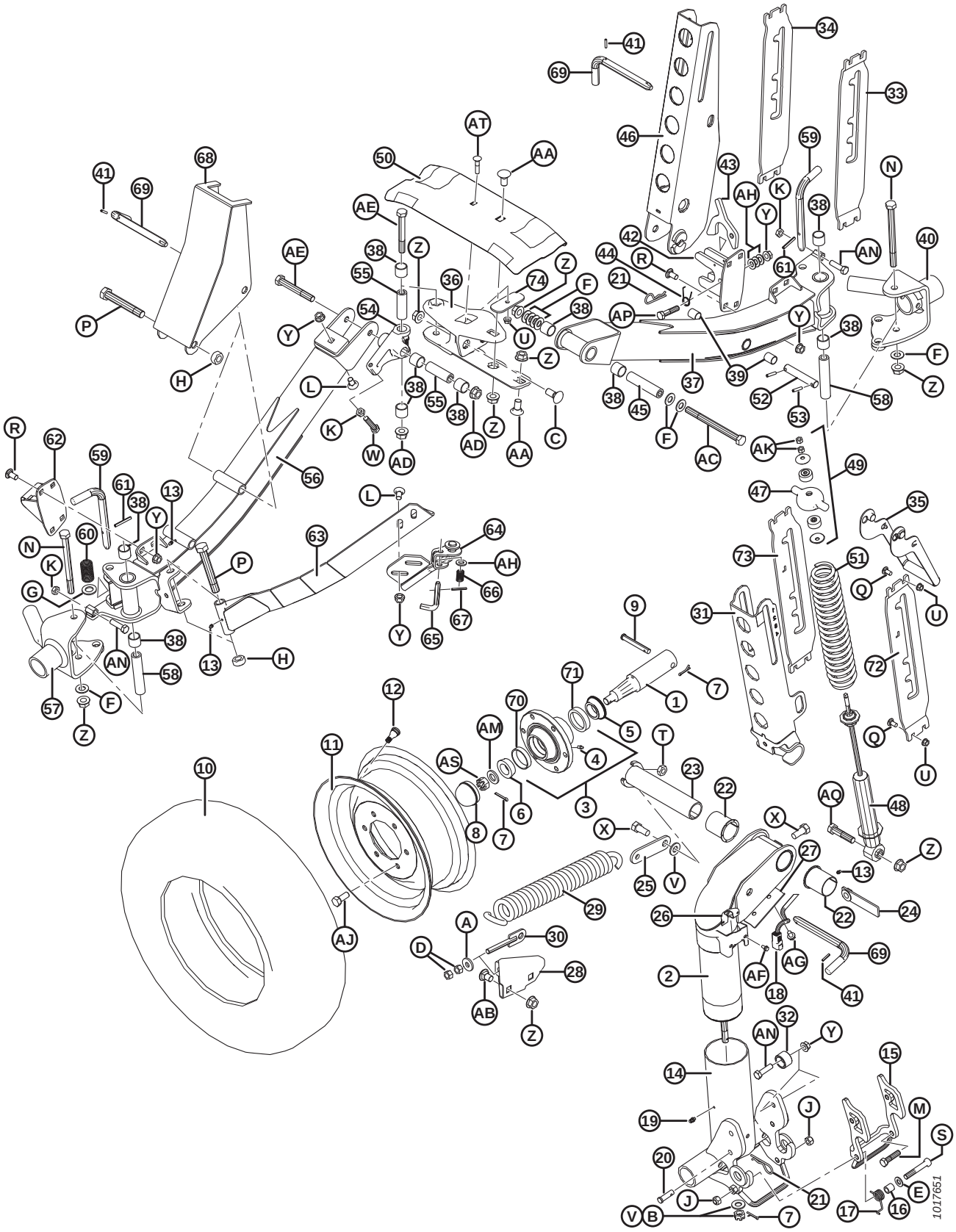

(OPTION) SLOW SPEED TRANSPORT PACKAGE – WHEELS AND SUPPORTS

Ref	Part Number	Description	Qty	Serial Number
	B5224	KIT – STABILIZER WHEELS [189]		
	B6449	KIT – TRANSPORT SUPPORTS AND HUBS [189]		
1	144378	SPINDLE	4	
2	244722	PIVOT WELDT	1	
3	41982	HUB – C/W BEARING CUPS [190]	4	
4	50174	FITTING – LUBE, DRIVE TYPE 1/4 IN. (CTD HUB)	4	
	21887	FITTING – LUBE, 1/8 NPT (ARMSTRONG HUB)	4	
5	30517	BEARING – CONE, C/W SEAL	4	
6	21376	BEARING – CONE ROLLER (NO SEAL)	4	
7	18648	PIN – COTTER 3/16 DIA X 1.25 ZP	7	
8	30520	CAP – DUST	4	
9	101007	PIN – CLEVIS	4	
10	193031	TIRE – ST 205/75 R15 STEEL BELTED RADIAL	4	
11	144531	WHEEL – 15 X 6 LB	4	
12	21153	STEM – TIRE VALVE ASSEMBLY #TR–415	4	
13	18671	FITTING – LUBE 1/4-28 UNF	5	
14	144971	SPINDLE WELDT	1	
15	144976	LATCH WELDT	1	
16	144742	SPACER – 3/4 IN. O.D. X .120 WALL X 19 LONG	1	
17	144741	SPRING – TORSION	1	
18	REF	HARNESS [191]		
19	21010	FITTING – LUBE 90° 1/4-28 TAPER THD	2	
20	19927	PIN – CLEVIS	1	
21	13125	PIN – HAIR	1	
22	35694	BUSHING – PLASTIC	2	
23	144374	PIN – WELDT	1	
24	144577	BAR – NUT ASSY	1	
25	144471	BAR	1	
26	193057	CLIP – WIRING HARNESS DEUTSCH CONNECTOR	1	
27	144739	HOLDER	1	
28	144873	SUPPORT – WELDT	1	
29	144724	SPRING – EXTENSION	1	
30	144425	BOLT – EYE WELDT	1	
31	144968	CHANNEL WELDT	1	
32	193008	ROLLER	2	
33	193214	SUPPORT – LH (USED RIGHT SIDE OF HEADER)	1	
34	193215	SUPPORT – RH (USED RIGHT SIDE OF HEADER)	1	
35	144899	HANDLE – WELDT	2	
36	125256	SUPPORT – WELDT	1	

189. Kits available through Whole Goods only.
190. Includes lube fitting (MD #50174), bearing cup (MD #7900), and bearing cup (MD #30516).
191. Refer to Section *55 (Option) Slow Speed Transport Package – Hitch Electrical, page 151*.

(OPTION) SLOW SPEED TRANSPORT PACKAGE – WHEELS AND SUPPORTS

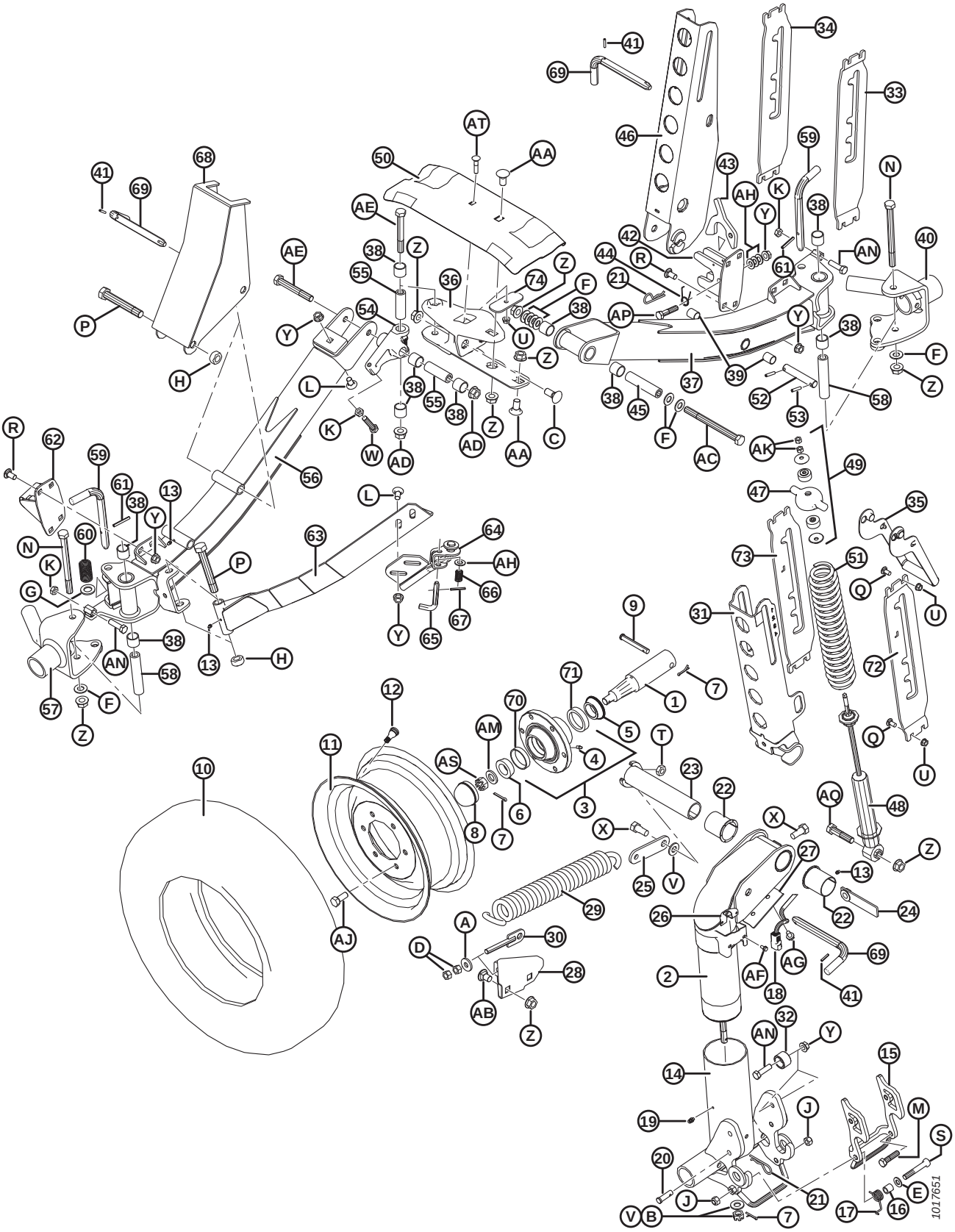

(OPTION) SLOW SPEED TRANSPORT PACKAGE – WHEELS AND SUPPORTS

Ref	Part Number	Description	Qty	Serial Number
37	294094	TUBE – AXLE, C/W BUSHINGS [192]	1	
38	133992	BUSHING – COMPOSITE	10	
39	156501	BUSHING – PLASTIC	2	
40	294036	PIVOT – LH WELDT	1	
41	16010	PIN – SPRING 3/16 DIA X 1.0 LG	3	
42	193009	LATCH – WELDT	1	
43	193016	LATCH	1	
44	144505	SPRING – TORSION	1	
45	144880	SPACER	1	
46	144956	CHANNEL WELDT	1	
47	144966	CASTING – SPRING CAP	2	
48	144934	SHOCK – TENNECO [193]	2	
49	174922	KIT – SHOCK MOUNTING	2	
50	220099	SUPPORT – DRAPER, TRANSPORT	1	
51	144962	SPRING – COMPRESSION	2	
52	144376	PIN – STRAIGHT	1	
53	16266	PIN – SPRING 1/4 DIA X 1.25 LG	2	
54	244748	PIVOT – ASSY W/ BUSHINGS [194]	1	
55	244671	SPACER	2	
56	294091	AXLE – ASSY, C/W BUSHINGS [194]	1	
57	294037	PIVOT – RH WELDT	1	
58	193022	SPACER	2	
59	144989	L-PIN	2	
60	29028	SPRING – COMPRESSION	2	
61	2148	PIN – SPRING 1/4 DIA X 2.0 LG	2	
62	193014	LATCH WELDT	1	
63	144324	BRACE – ANGLE WELDT	1	
64	144433	LATCH WELDT	1	
65	144409	L-PIN	1	
66	35618	SPRING – COMPRESSION	1	
67	7642	PIN – SPRING 3/16 DIA X 1.5 LG	1	
68	144321	SUPPORT – C'BAR WELDT	1	
69	144415	ASSY – L-PIN	3	
70	7900	CUP – ROLLER BEARING	4	
71	30516	CUP – ROLLER BEARING	4	
72	193216	SUPPORT – LH (USED LEFT SIDE OF HEADER)	1	
73	193217	SUPPORT – RH (USED LEFT SIDE OF HEADER)	1	
74	125236	BAR – DRAPER SUPPORT RETENTION	1	
A	4761	WASHER – FLAT		
B	6649	NUT – SLOTTED HEX 0.625 IN. NC ZN PL		

192. Includes composite bushing (MD #133992) and plastic bushing (MD #156501).
193. Includes shock mounting kit (MD #174922).
194. Includes composite bushing (MD #133992) and hardware (MD #21056, 30833).

(OPTION) SLOW SPEED TRANSPORT PACKAGE – WHEELS AND SUPPORTS

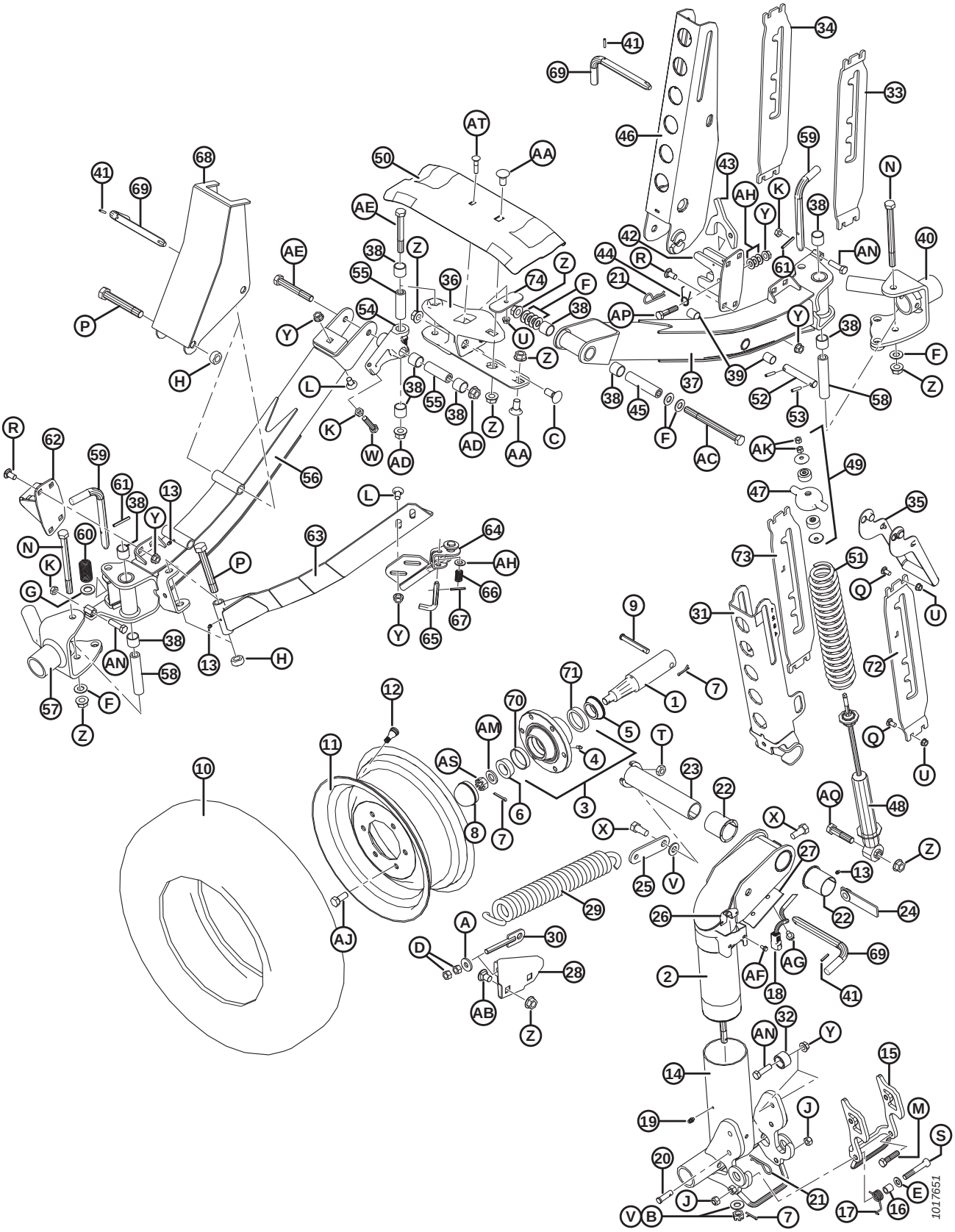

(OPTION) SLOW SPEED TRANSPORT PACKAGE – WHEELS AND SUPPORTS

Ref	Part Number	Description	Qty	Serial Number
C	18523	BOLT – RHSN 5/8 NC X 1.5 GR 5 ZP		
D	18591	NUT – HEX 1/2-13 UNC GR 5 ZP		
E	18599	WASHER – SAE FLAT 17/32 I.D. X 1-1/16 IN. O.D. ZP		
F	18600	WASHER – SAE FLAT 21/32 I.D. X 1-5/16 IN. O.D. ZP		
G	18601	WASHER – SAE FLAT 13/16 I.D. X 1.5 IN. O.D. ZP		
H	102636	NUT – HEX, SIDE LOCK DT .750-10 UNC		
J	18697	NUT – HEX LOCK DT .500-13 UNC		
K	21056	NUT – HEX JAM 1/2-13 UNC GR 5 ZP		
L	21066	BOLT – RHSN 1/2 NC X 1 GR 5 ZP		
M	21576	BOLT – HH 1/2 NC X 2.0 LG GR 5 ZP		
N	21591	BOLT – HH 5/8 NC X 7.5 LG GR 5 ZP		
P	21599	BOLT – HH 3/4 NC X 5.0 LG GR 5 ZP		
Q	100456	BOLT – RHSSN 3/8 NC X 1.0 GR 5 ZP		
R	21868	BOLT – RHSSN 1/2 NC X 1.0 GR 5 ZP		
S	21560	BOLT – HH 1/2 NC X 3.0 LG GR 5 ZP		
T	21941	NUT – HEX LOCK JAM (DT) 5/8-11 UNC GR 5 ZP		
U	30228	NUT – FLANGE DT SMOOTH FACE 0.375-16 UNC		
V	30441	WASHER – HARDENED		
W	30833	BOLT – HH 1/2 NC X 2.25 TFL GR 5 ZP		
X	48050	BOLT – SHOULDER .625-11 UNC		
Y	50186	NUT – FLANGE LOCK SM FACE DT 0.500-13 UNC GR 5		
Z	50225	NUT – FLANGE DT SMOOTH FACE .625-11 UNC		
AA	103562	BOLT – RHSN 5/8 NC X 1.25 GR 5 ZP		
AB	117015	BOLT – RHSSN 5/8 NC X 1.0 GR 5 ZP		
AC	193211	BOLT – HEX HEAD 5/8 NC X 7.5 LG GR 8 ZP		
AD	188467	NUT – FLANGE DT SMOOTH FACE .625-18 UNC GR. G		
AE	252305	BOLT – HH FINE 5/8-18 X 4.5 GR 8 ZP		
AF	21055	SCREW – SELF TAP HEX WASH HD 1/4 NC X 1/2		
AG	101898	SCREW – HEX WASH HD THD ROLLING 3/8 NC X 5/8		
AH	18599	WASHER – SAE FLAT 17/32 I.D. X 1-1/16 IN. O.D. ZP		
AJ	18916	BOLT – 90° WHEEL 9/16 NF X 1.75 OL		
AK	18866	NUT – HEX 3/8-24 UNF GR 5 ZP		
AM	21540	WASHER – HARDENED		
AN	50072	BOLT – HH 1/2 NC X 1.75 LG TFL GR 5 ZP		
AP	21578	BOLT – HH 1/2 NC X 2.25 LG GR 5 ZP		
AQ	30922	BOLT – HH 5/8 NC X 2.75 GR 5 ZP		
AS	5512	NUT – HEX SLOTTED .750-16 UNF ZN PL		
AT	50197	BOLT – RHSN 3/8 NC x 1.75 LG GR 5 ZP		

58 (Option) Stabilizer Wheels

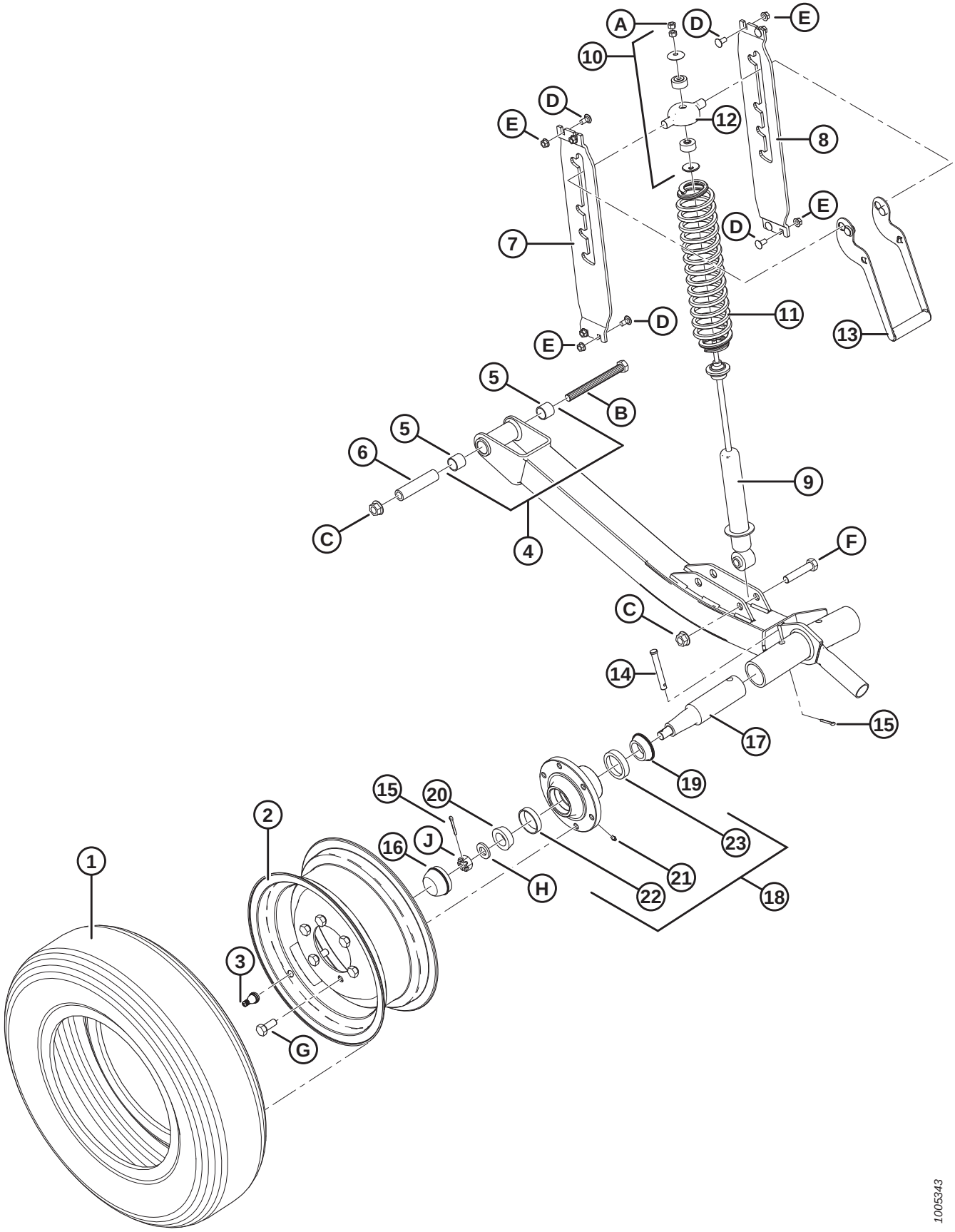

(OPTION) STABILIZER WHEELS

Ref	Part Number	Description	Qty	Serial Number
	C1986	KIT – STABILIZER WHEELS (30–45 FT ONLY) [195]		
1	193031	TIRE – ST 205/75 R15 STEEL BELTED RADIAL	2	
2	144531	WHEEL – 15 X 6 LB	2	
3	21153	STEM – TIRE VALVE ASSEMBLY #TR–415	2	
4	144860	TUBE – AXLE, C/W BUSHINGS [196]	2	
5	133992	BUSHING – COMPOSITE	4	
6	144880	SPACER	2	
7	193214	SUPPORT – LH	2	
8	193215	SUPPORT – RH	2	
9	144934	SHOCK – TENNECO	2	
10	174922	KIT – SHOCK MOUNTING	2	
11	144935	SPRING – COMPRESSION	2	
12	144966	CASTING – SPRING CAP	2	
13	144899	HANDLE – WELDT	2	
14	101007	PIN – CLEVIS	2	
15	18648	PIN – COTTER 3/16 DIA X 1.25 ZP	2	
16	30520	CAP – DUST	2	
17	144378	SPINDLE	2	
18	41982	HUB – C/W BEARING CUPS [197]	2	
19	30517	BEARING – CONE, INNER W/ SEAL	2	
20	21376	BEARING – CONE, OUTER	2	
21	50174	FITTING – LUBRICATION DRIVE TYPE 1/4 IN. (CTD HUB)	2	
	21887	FITTING – LUBE, 1/8 NPT (ARMSTRONG HUB)	2	
22	7900	BEARING – CUP, OUTER	2	
23	30516	BEARING – CUP, INNER	2	
A	18866	NUT – HEX 3/8-24 UNF GR 5 ZP		
B	21577	BOLT – HH 5/8 NC X 6.5 LG GR 5 ZP		
C	50225	NUT – FLANGE DT SMOOTH FACE 5/8-11 UNC		
D	21863	BOLT – RHSSN 3/8 NC X 0.75 LG GR 5 ZP		
E	30228	NUT – FLANGE DT SMOOTH FACE 3/8-16 UNC		
F	21583	BOLT – HH 5/8 NC X 3.0 LG GR 5 ZP		
G	18916	BOLT – 90° WHEEL 9/16 NF X 1.75 OL		
H	21540	WASHER – HARDENED		
J	5512	NUT – HEX SLOTTED .750-16 UNF ZN PL		

195. Kits available through Whole Goods only.
196. Includes two bushings (MD #133992).
197. Includes lube fitting (MD #50174 or 21887) and bearings (MD #7900, 30516).

59 (Option) Stabilizer Wheels – Secondary

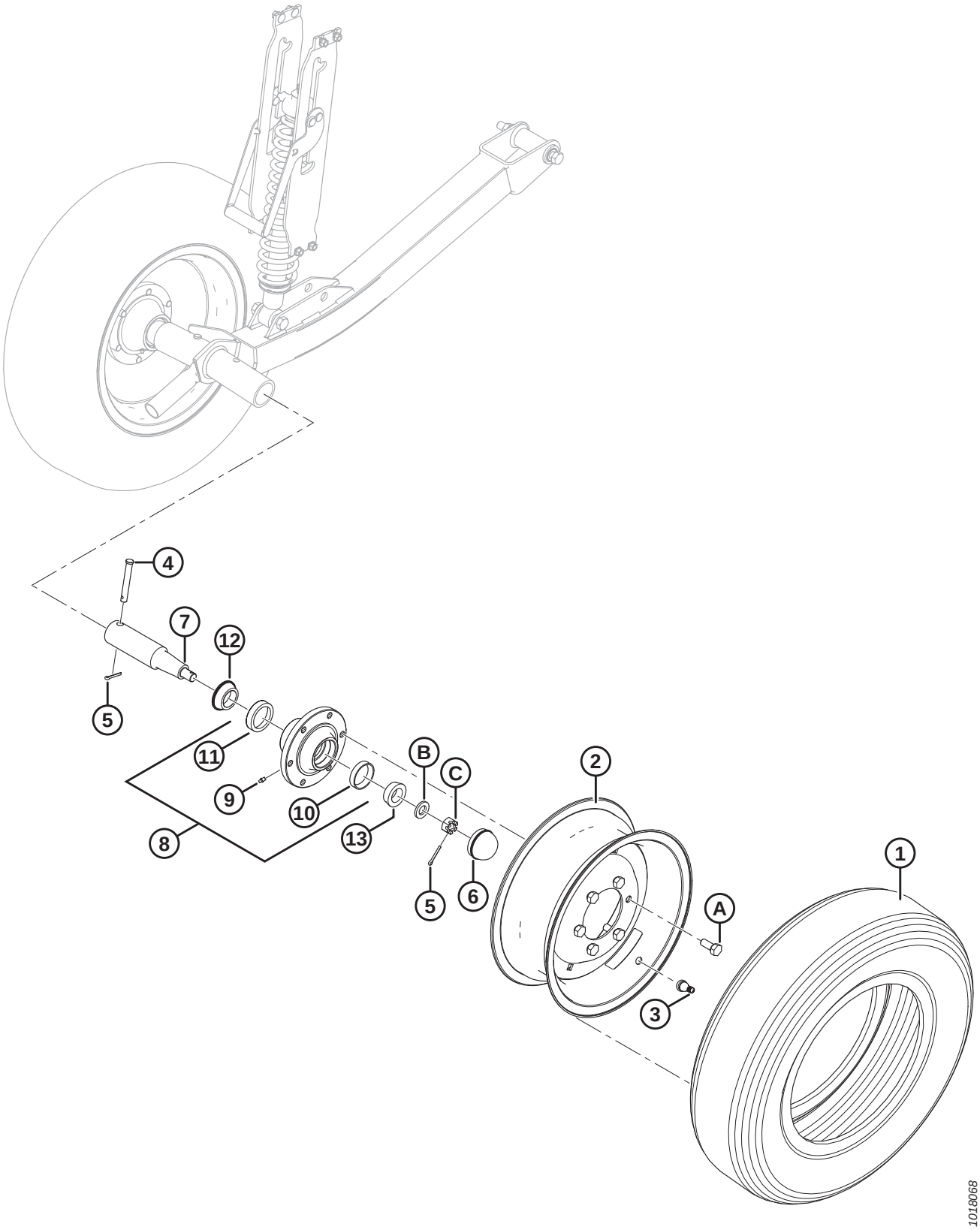

(OPTION) STABILIZER WHEELS – SECONDARY

Ref	Part Number	Description	Qty	Serial Number
	B6179	KIT – SECOND STABILIZER WHEEL [198]		
1	193031	TIRE – ST 205/75 R15 STEEL BELTED RADIAL	1	
2	144531	WHEEL – 15 X 6 LB	1	
3	21153	STEM – TIRE VALVE ASSEMBLY #TR-415	1	
4	101007	PIN – CLEVIS	1	
5	18648	PIN – COTTER 3/16 DIA X 1.25 ZP	2	
6	30520	CAP – DUST	1	
7	144378	SPINDLE	1	
8	41982	HUB – C/W BEARING CUPS [199]	1	
9	50174	FITTING – LUBRICATION DRIVE TYPE 1/4 IN. (CTD HUB)	1	
	21887	FITTING – LUBE, 1/8 NPT (ARMSTRONG HUB)	1	
10	7900	BEARING – CUP, OUTER	1	
11	30516	BEARING – CUP, INNER	1	
12	30517	BEARING – CONE, INNER W/ SEAL	1	
13	21376	BEARING – CONE, OUTER	1	
A	18916	BOLT – 90° WHEEL 9/16 NF X 1.75 OL		
B	21540	WASHER – HARD ASTM F436 M20-340HV-AB2C		
C	5512	NUT – HEX SLOTTED .750-16 UNF ZN PL		

198. Kits available through Whole Goods only.
199. Includes lube fitting (MD #50174 or 21887) and bearing cups (MD #7900, 30516).

60 (Option) Stub Guards with Sheet Metal Hold-Downs

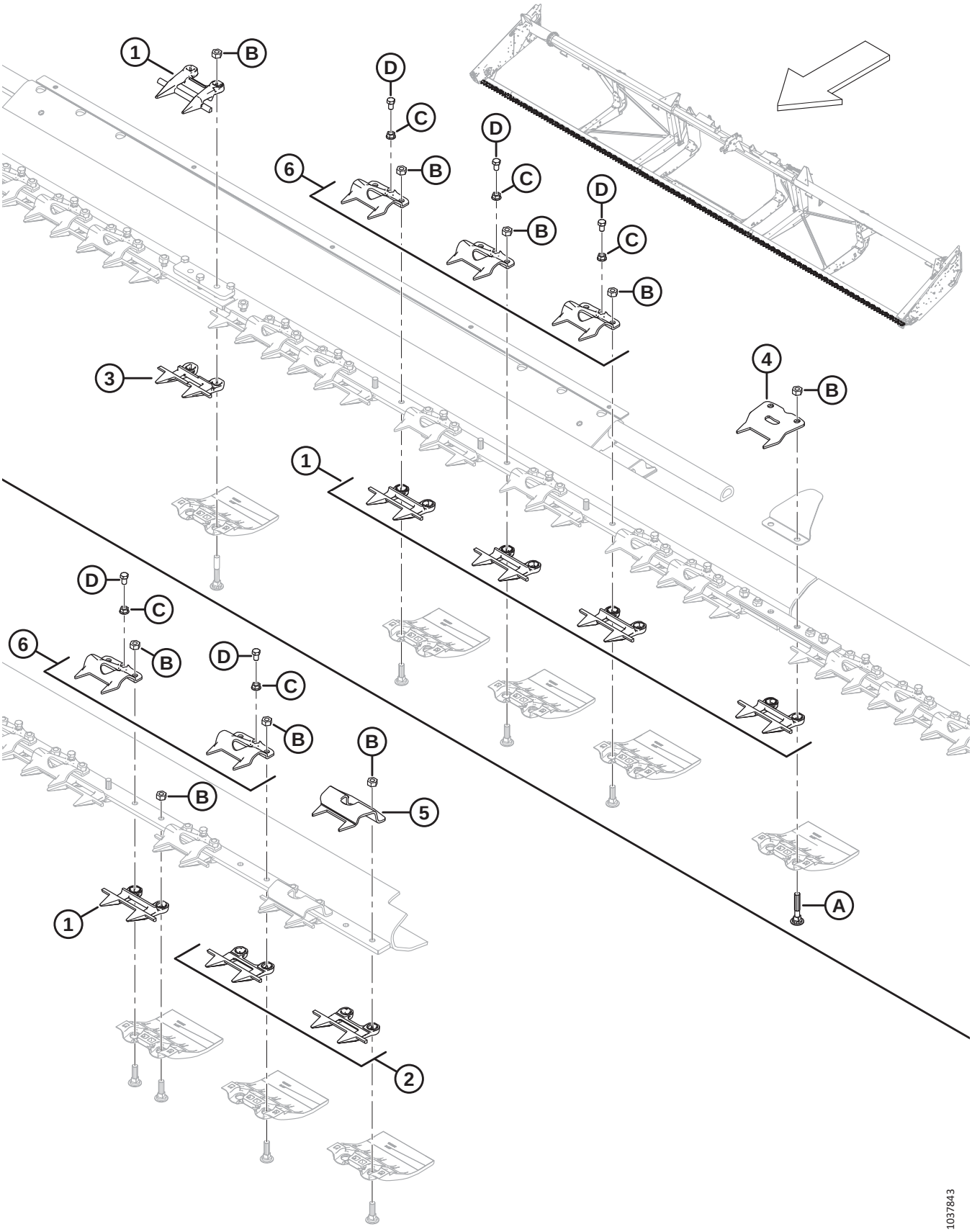

(OPTION) STUB GUARDS WITH SHEET METAL HOLD-DOWNS

NOTE:

Illustration; TOP: middle, BOTTOM: left end (right end is opposite). Stub Guards with Sheet Metal Hold-Downs kits are designed for use with FD125, FD130, and FD135 export flex headers, and FD140 and FD145 export split frame flex headers.

NOTE:

On FD140 and FD145 split-frame headers, a standard guard (MD #118346) is used as the center hold-down over the offset center guard (MD #124775).

Ref	Part Number	Description	Qty	Serial Number
	B6982	**KIT – STUB GUARDS AND SM HOLD DOWNS 25 FT FD** [200]		
	B6677	KIT – STUB GUARDS AND SM HOLD DOWNS 30 FT FD [200]		
	B6678	KIT – STUB GUARDS AND SM HOLD DOWNS 35 FT FD [200]		
	B6679	KIT – STUB GUARDS AND SM HOLD DOWNS 40 FT FD [200]		
	B6680	KIT – STUB GUARDS AND SM HOLD DOWNS 45 FT FD [200]		
1	118346	SICKLE GUARD [201]		
2	118347	SICKLE GUARD – STUB, W/O WEARBAR [202]		
3	124775	SICKLE GUARD – CENTER, STUB (40–45 FT ONLY) [203]		
4	294849	CLIP – SHEET METAL HOLD-DOWN (SPLIT JOINT) [204]		
5	165209	CLIP – SHEET METAL HOLD-DOWN (KNIFEHEAD END) [205]		
6	118351	CLIP [206]		
A	279575	BOLT – RHSN 7/16-14 X 2.5-GR5-ZP		
B	18654	NUT – HEX 7/16-14 UNC GR 5 ZP		
C	118193	NUT – FLANGE HEX .375 UNC		
D	118154	BOLT – HEX HD TFL 3/8-16 X 0.63 GR8-AA1J		

200. Kits available through Whole Goods only.
201. Complete cutterbar quantities: FD125 = 46, FD130 = 56, FD135= 66, FD140 = 72, FD145 = 82.
202. Complete cutterbar quantities: FD125 = 4, FD130 = 4, FD135 = 4, FD140 = 8, FD145 = 8.
203. Complete cutterbar quantities: FD125 = 0, FD130 = 0, FD135 = 0, FD140 = 1, FD145 = 1.
204. Complete cutterbar quantities: FD125 = 2, FD130 = 2, FD135 = 2, FD140 = 3, FD145 = 3.
205. Complete cutterbar quantities: FD125 = 2, FD130 = 2, FD135 = 2, FD140 = 4, FD145 = 4.
206. Complete cutterbar quantities: FD125 = 43, FD130 = 53, FD135 = 63, FD140 = 67, FD145 = 76.

61 (Option) Stubble Lights

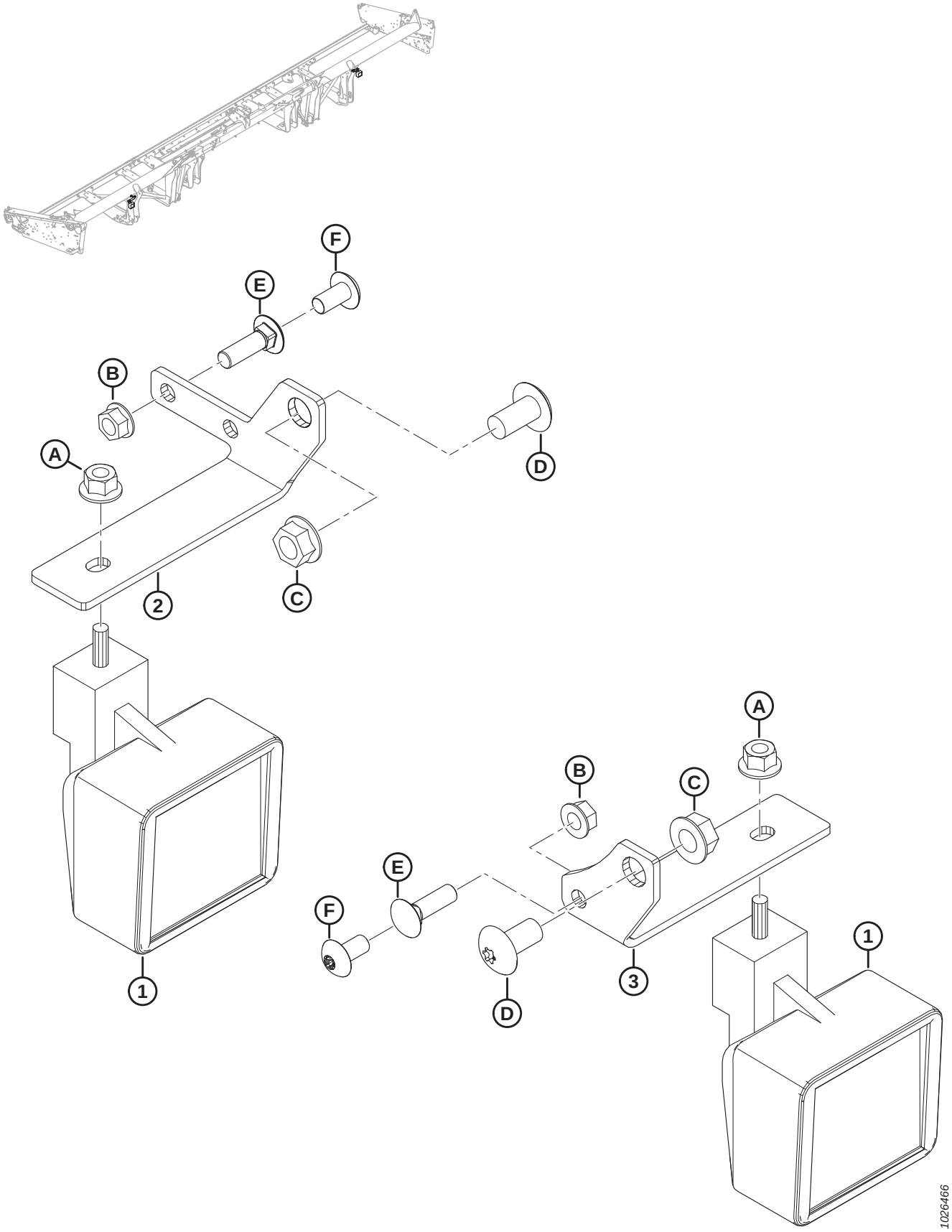

(OPTION) STUBBLE LIGHTS

Ref	Part Number	Description	Qty	Serial Number
	B6634	KIT – STUBBLE LIGHT 30-45 FT JD [207]		
1	109717	LIGHT – WORK	2	
2	304021	SUPPORT – LH STUBBLE LIGHT	1	
3	245450	SUPPORT – RH STUBBLE LIGHT	1	
A	50101	NUT – HEX FLG STVR LOC M10 X 1.5-10-AA1J		
B	30228	NUT – FLG DT SMTH FACE 3/8 NC-GR5-AA1J		
C	50186	NUT – FLG LK SM FACE DT 1/2-13 UNC-GR5-AA1J		
D	105136	SCREW – MACHINE		
E	19966	BOLT – RHSN 3/8-16 X 1.25-GR5-AA1J [208]		
F	135157	SCREW – MACHINE [209]		

207. Used with John Deere combines only. Kits available through Whole Goods only.
208. Bolt used when mounting with slow speed transport installed.
209. Screw used when the support is mounted to header leg. No slow speed transport installed.

62 (Option) Sunflower Attachment – Base Kit

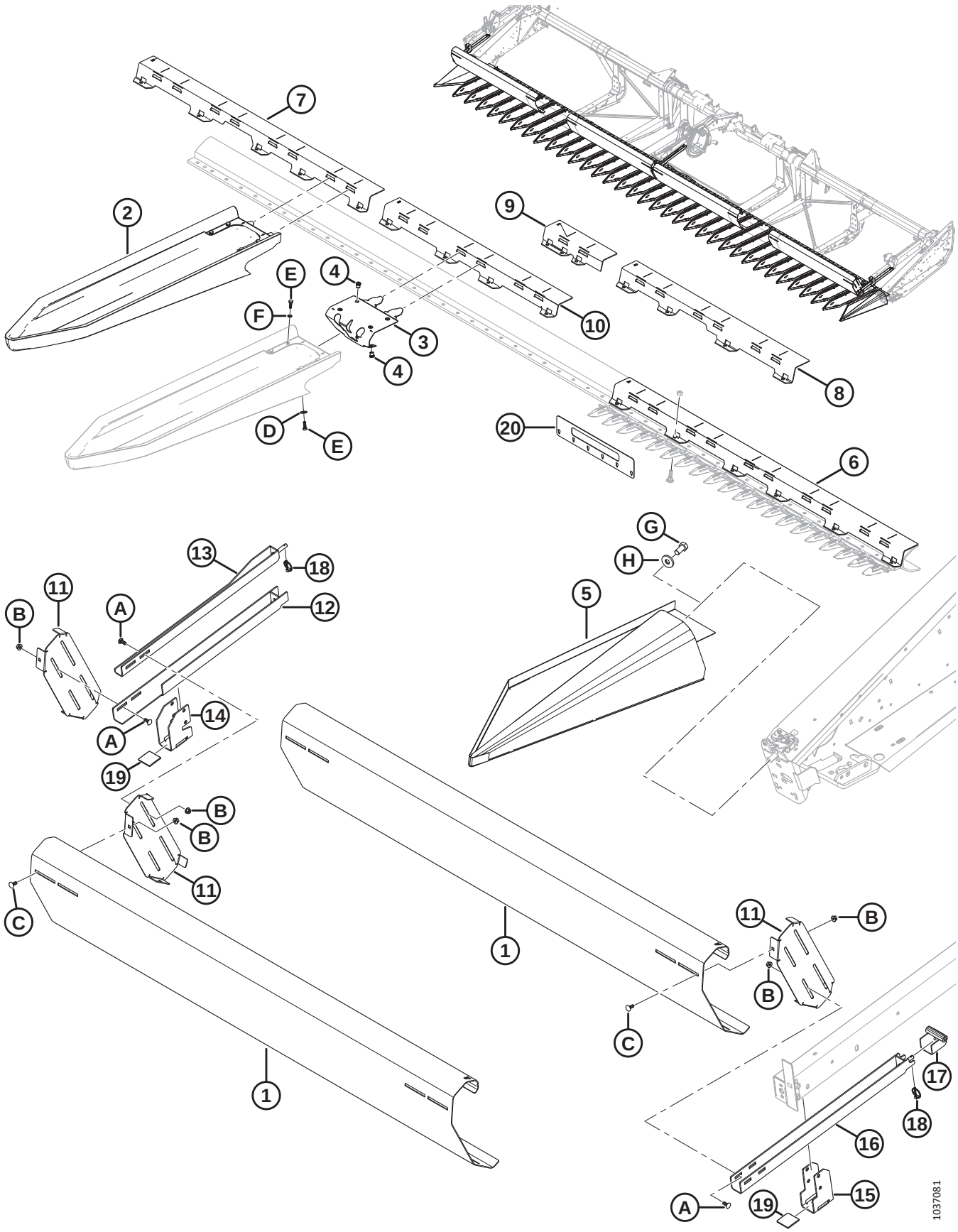

(OPTION) SUNFLOWER ATTACHMENT – BASE KIT

Ref	Part Number	Description	Qty	Serial Number
	C2082	KIT – 30 FOOT SUNFLOWER ATTACHMENT [210]		
	C2083	KIT – 35 FOOT SUNFLOWER ATTACHMENT [210]		
	C2084	KIT – 40 FOOT SUNFLOWER ATTACHMENT [210]		
	C2085	KIT – 45 FOOT SUNFLOWER ATTACHMENT [210]		
	B7269	KIT – SUNFLOWER ATTACHMENT BASE [211]		
1	119530	DEFLECTOR – LEAN BAR A [212]		
2	119722	PAN – QUICK ATTACH [213]		
3	119723	ASSEMBLY – PAN LATCH [214]		
4	252179	RIVNUT – M8 X 1.25 HEX 0.7-3.8 [215]		
5	119392	PAN – END LH WELDT	1	
	119442	PAN – END RH WELDT	1	
6	119415	SUPPORT – PAN 5 FT A [216]		
7	119460	SUPPORT – PAN 4 FT B [217]		
8	119457	SUPPORT – PAN 3 FT C [218]		
9	119446	SUPPORT – PAN HINGE D	1	
	119447	SUPPORT – PAN HINGE E	1	
10	119454	SUPPORT – PAN HINGE F	1	
	119455	SUPPORT – PAN HINGE G	1	
11	119384	BRACKET – LEAN BAR MOUNT	4	
12	119285	SUPPORT – LEAN BAR [219]	1	
13	119284	BRACKET – LEAN BAR MOUNT WELDT [219]	1	
14	119282	SUPPORT – LEAN BAR [219]	1	
15	119728	SUPPORT – LEAN BAR [220]	2	
16	119729	BRACKET – LEAN BAR MOUNT WELDT [220]	2	
17	119747	SUPPORT – REEL ARM [220]	2	
18	102264	PIN – LYNCH 3/16 X 9/16 IN.	3	
19	137626	PAD – REEL DRIVE WEAR	3	
20	119543	TOOL – GUARD TIP CHECK	1	
A	136506	BOLT – RHSSN M10 X 1.5 X 25-8.8-AA1J		
B	135799	NUT – HEX FLG CTR LOC M10 X 1.5-10		
C	135785	BOLT – RHSN M10 X 1.5 X 25-8.8-AA1J		

210. Kit contains base kit (MD #B7269), pans kit (MD #B7273), and deflectors kit (MD #B7282, B7283, B7284, or B7285). Kits available through Whole Goods only.
211. Kits available through Whole Goods only.
212. Quantities: FD130 = 4; FD135 = 4; FD140 = 4; FD145 = 6.
213. Includes latch (MD #119723), clamp (NSS), six bolts (MD #184652), four lock spring washers (MD #30716), and two flat washers (MD 184709). Quantities: FD130 = 30; FD135 = 35; FD140 = 40; FD145 = 45.
214. Includes six rivnuts (MD #252179).
215. Six installed on each pan latch assembly (MD #119723).
216. Quantities: FD130 = 2; FD135 = 2; FD140 = 4; FD145 = 4.
217. Quantities: FD130 = 1; FD135 = 0; FD140 = 1; FD145 = 0.
218. Quantities: FD130 = 2; FD135 = 5; FD140 = 2; FD145 = 5.
219. Used on reel center arm.
220. Used on reel outer arms.

(OPTION) SUNFLOWER ATTACHMENT – BASE KIT

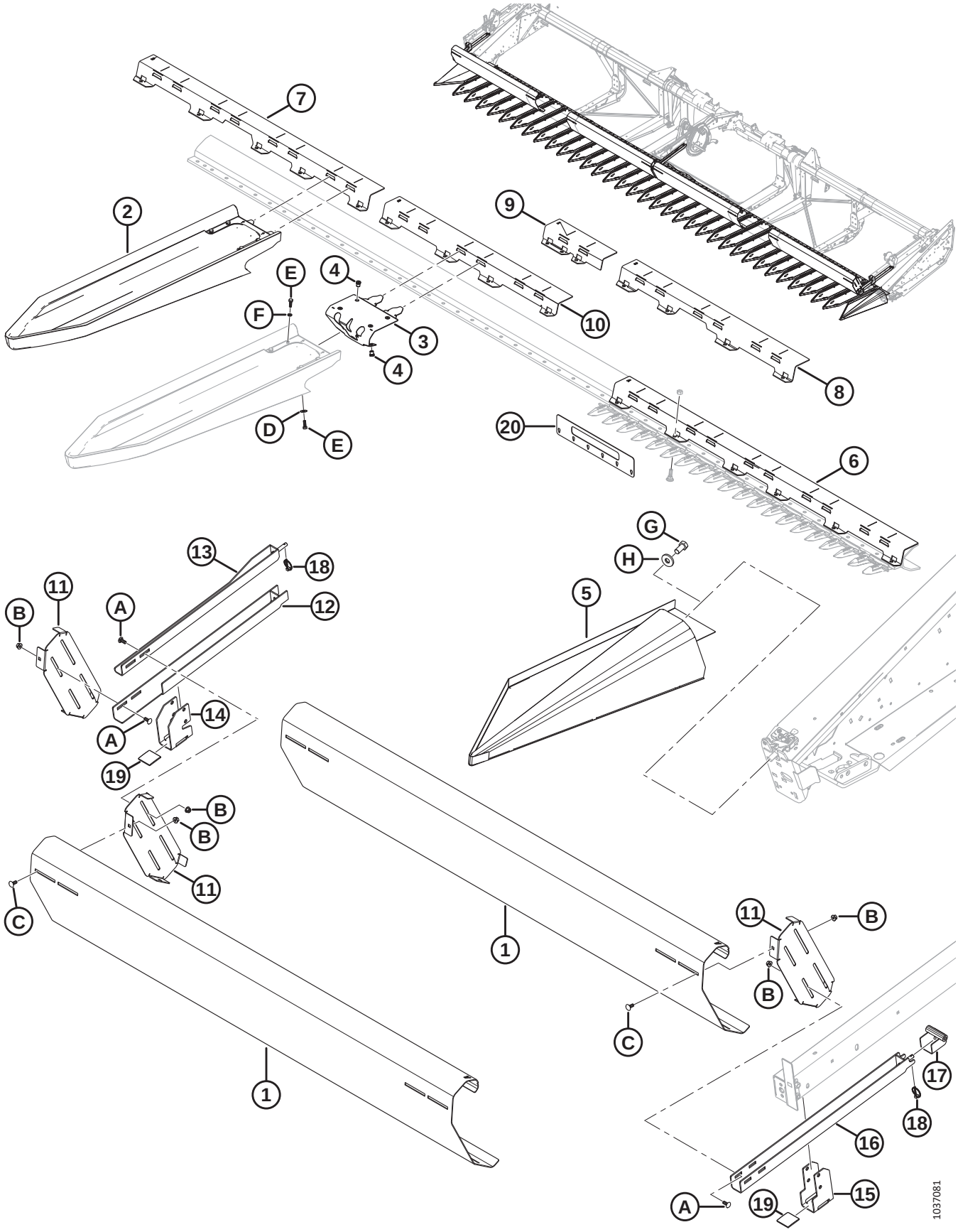

(OPTION) SUNFLOWER ATTACHMENT – BASE KIT

Ref	Part Number	Description	Qty	Serial Number
D	**184709**	**WASHER – FLAT LARGE M8-200HV**		
E	**184652**	**BOLT – HEX HD TFL M8 X 1.25 X 25-8.8-AA1J**		
F	**30716**	**WASHER – LOCK SPRING M8-CS-1055-1065-AA1J**		
G	**135579**	**BOLT – HEX HD 3/4-16 X 1.5-GR5-AA1J** [221]		
H	**6647**	**WASHER – FLAT** [221]		

221. Used if latch assembly is not installed.

63 (Option) Sunflower Attachment – Pans

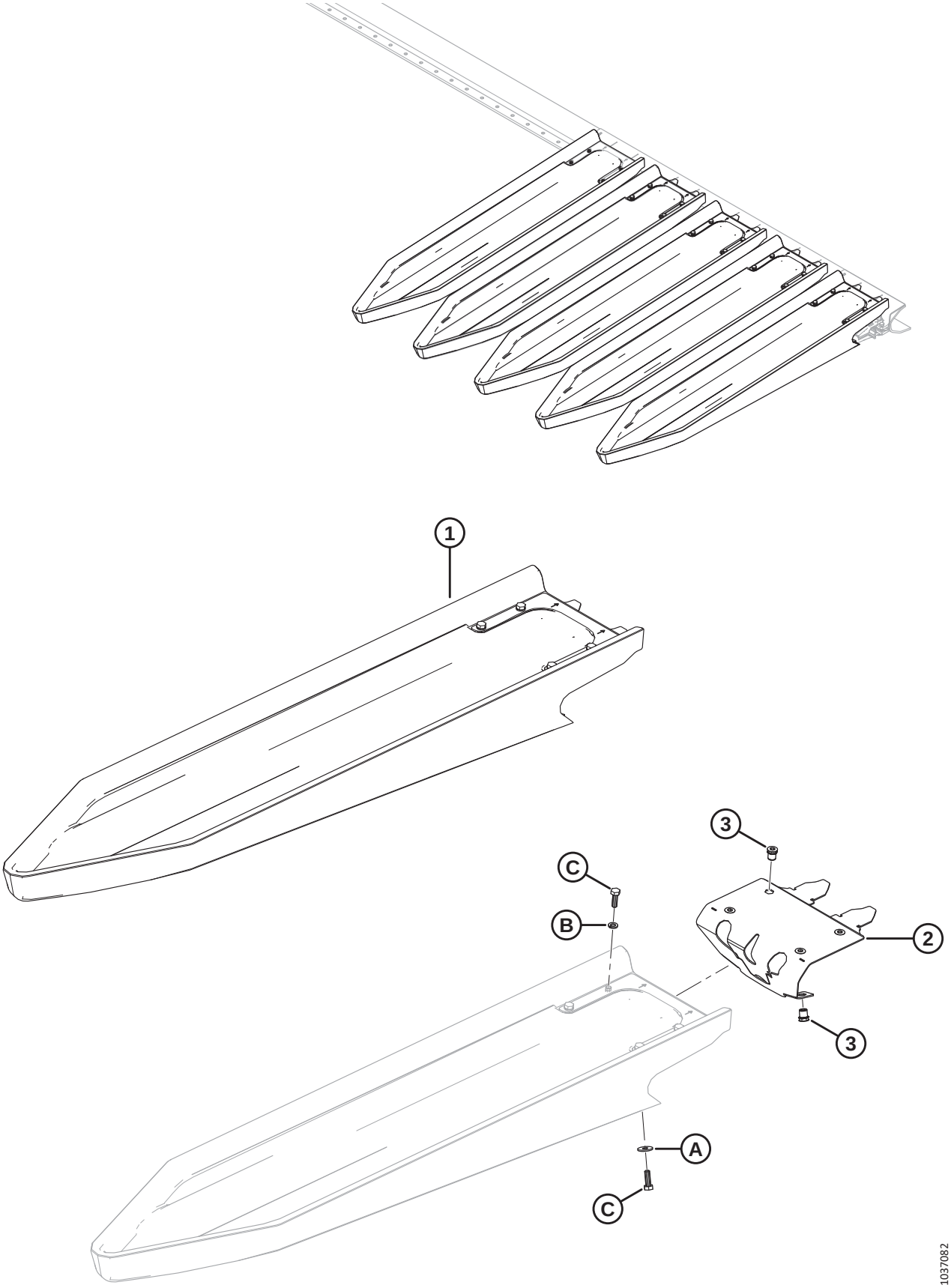

(OPTION) SUNFLOWER ATTACHMENT – PANS

Ref	Part Number	Description	Qty	Serial Number
	B7273	KIT – SUNFLOWER PAN (5 PANS) [222]	1	
1	119722	PAN – QUICK ATTACH [223]	5	
2	119723	ASSEMBLY – PAN LATCH [224]	5	
3	252179	RIVNUT – M8 X 1.25 HEX0.7-3.8	30	
A	184709	WASHER – FLAT LARGE M8-200HV		
B	30716	WASHER – LOCK SPRING M8-CS-1055-1065-AA1J		
C	184652	BOLT – HEX HD TFL M8 X 1.25 X 25-8.8-AA1J		

222. Kit contains 5 pans. Base kit (MD #B7269) contains pans for 30-ft. header. 35-ft. header requires 1 pan kit, 40-ft. header requires 2 pan kits, and 45-ft. header requires 3 pan kits. Kits available through Whole Goods only.
223. Includes latch (MD #119723), clamp (NSS), six bolts (MD #184652), four lock spring washers (MD #30716), and two flat washers (MD 184709).
224. Includes six rivnuts (MD #252179).

64 (Option) Sunflower Attachment – Deflectors

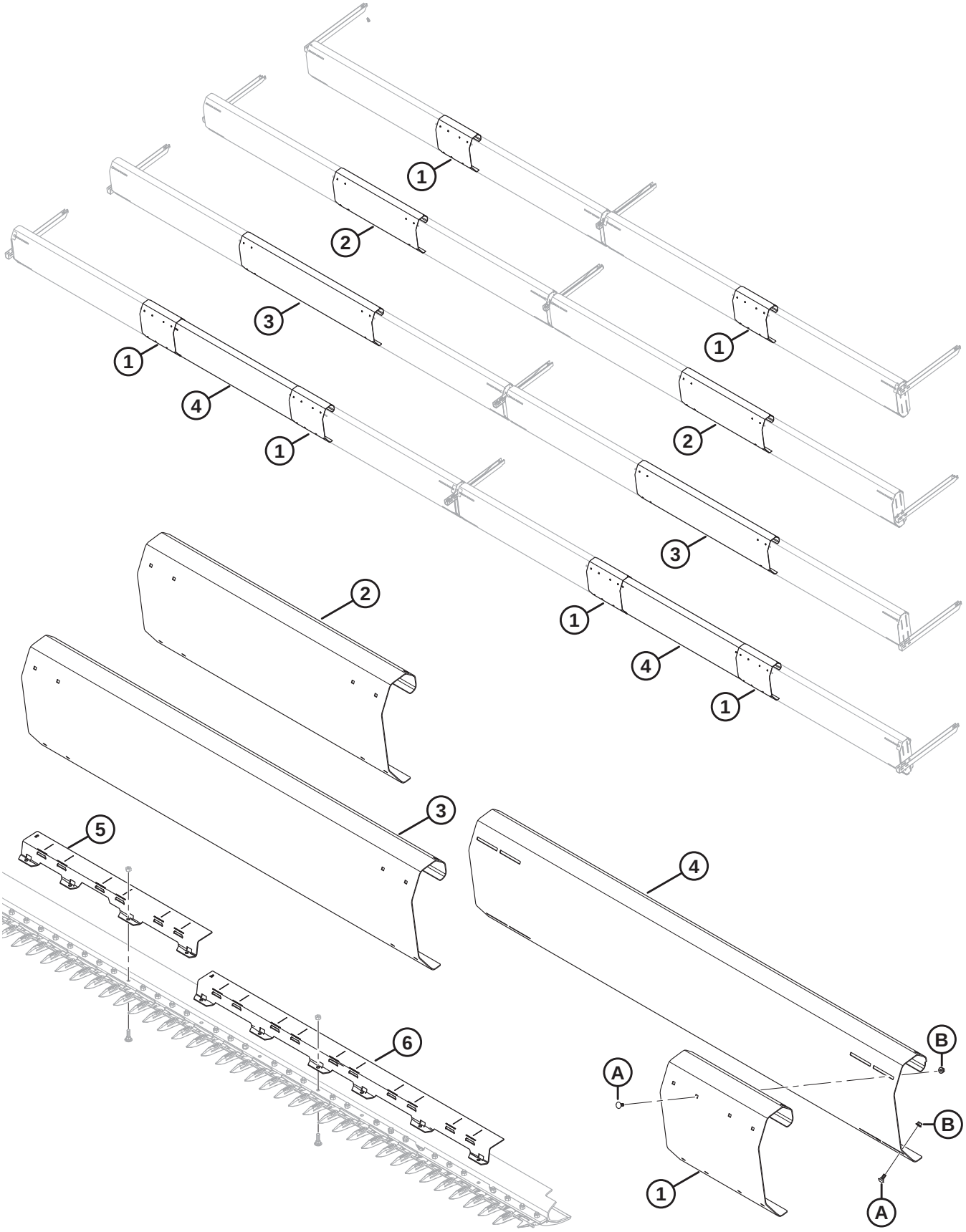

(OPTION) SUNFLOWER ATTACHMENT – DEFLECTORS

Ref	Part Number	Description	Qty	Serial Number
	B7282	KIT – SUNFLOWER DEFLECTOR 30 FT [225]		
	B7283	KIT – SUNFLOWER DEFLECTOR 35 FT [225]		
	B7284	KIT – SUNFLOWER DEFLECTOR 40 FT [225]		
	B7285	KIT – SUNFLOWER DEFLECTOR 45 FT [225]		
1	119519	DEFLECTOR – LEAN BAR B (30 AND 45 FT) [226]		
2	119531	DEFLECTOR – LEAN BAR C (35 FT)	2	
3	119518	DEFLECTOR – LEAN BAR D (40 FT)	2	
4	119530	DEFLECTOR – LEAN BAR A (45 FT)	2	
5	119457	SUPPORT – PAN 3 FT C (35 AND 45 FT)	3	
6	119415	SUPPORT – PAN 5 FT A (40 AND 45 FT)	2	
A	135785	BOLT – RHSN M10 X 1.5 X 25-8.8-AA1J (45 FT)		
B	135799	NUT – HEX FLG CTR LOC M10 X 1.5-10 (45 FT)		

225. Kits available through Whole Goods only.
226. Quantities: 30 ft. = 2, 45 ft. = 4

65 (Option) Tine Tube Reinforcing Kit

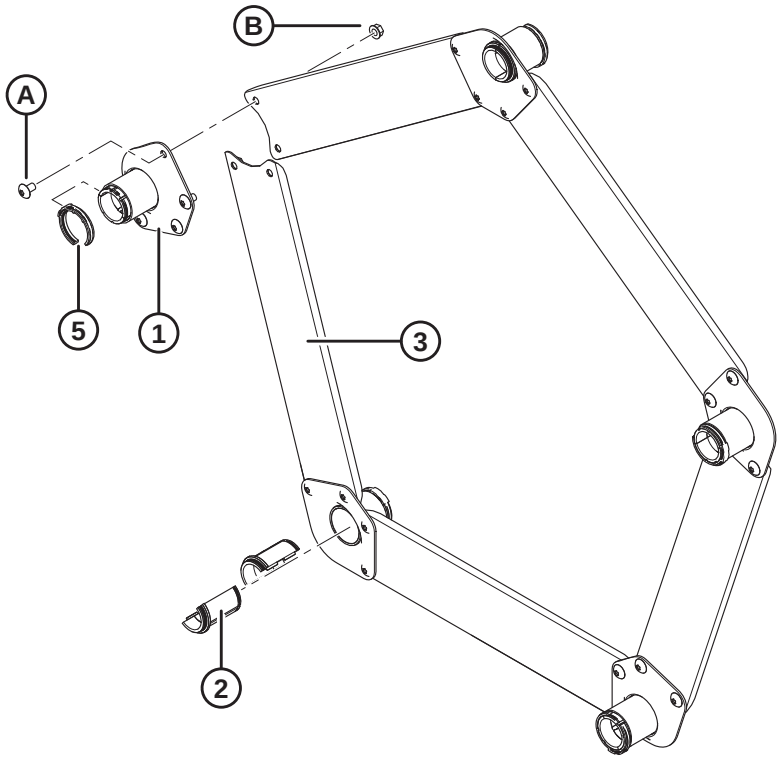

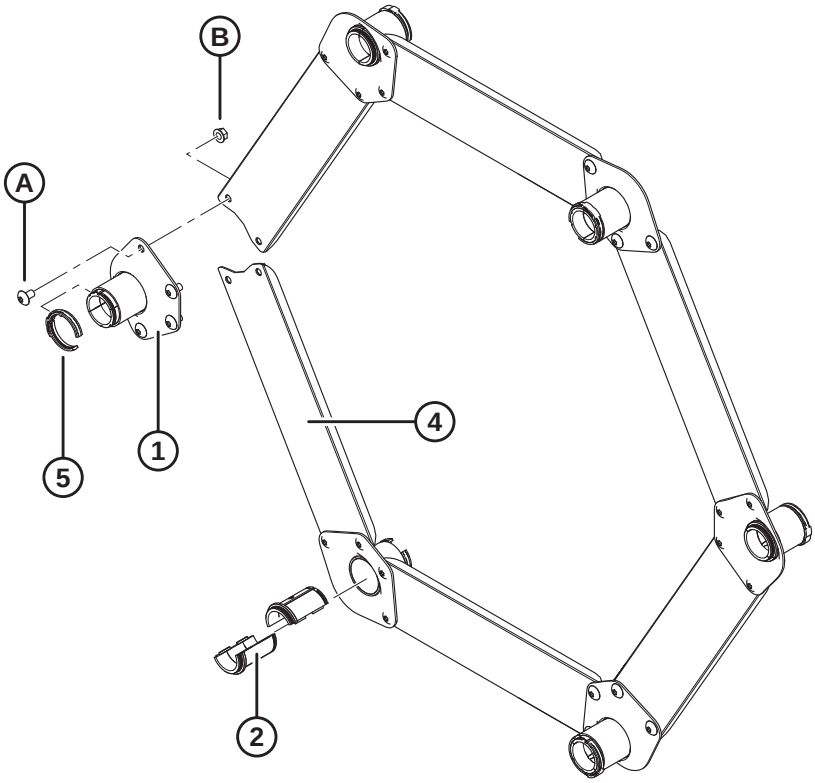

1005175

(OPTION) TINE TUBE REINFORCING KIT

NOTE:

Illustration; TOP: 5 bat, BOTTOM: 6 bat.

Ref	Part Number	Description	Qty 5/6 Bat	Serial Number
	B5825	KIT – D60/5, FD70/5 TINE TUBE REINFORCING (FOR 5 BAT REEL HEADERS IN HEAVY REEL LOAD CONDITIONS) [227]		
	B5826	KIT – D60/5, FD70/5 TINE TUBE REINFORCING (FOR 6 BAT REEL HEADERS IN HEAVY REEL LOAD CONDITIONS) [227]		
1	164988	SUPPORT – WELDT	5/6	
2	220939	BUSHING – TINE TUBE (BOX OF 25) [228]	10/12	
3	164993	CHANNEL – TIE BAR (5 BAT REEL)	5/0	
4	164995	CHANNEL – TIE BAR (6 BAT REEL)	0/6	
5	220941	CLAMP – TINE TUBE BUSHING, CENTER RIB (BOX OF 5) [229]	5/6	
A	135450	SCREW – MACHINE		
B	30228	NUT – FLANGE DT SMOOTH FACE 0.375-16 UNC		

227. Kits available through Whole Goods only.
228. Not sold individually; to service this part, a box of 25 tine tube bushings must be ordered.
229. Not sold individually; to service this part, a box of 5 tine tube bushing clamps must be ordered.

66 (Option) Upper Cross Auger – Left End (FD125, FD130, FD135, and FD140) – 2021 and Prior

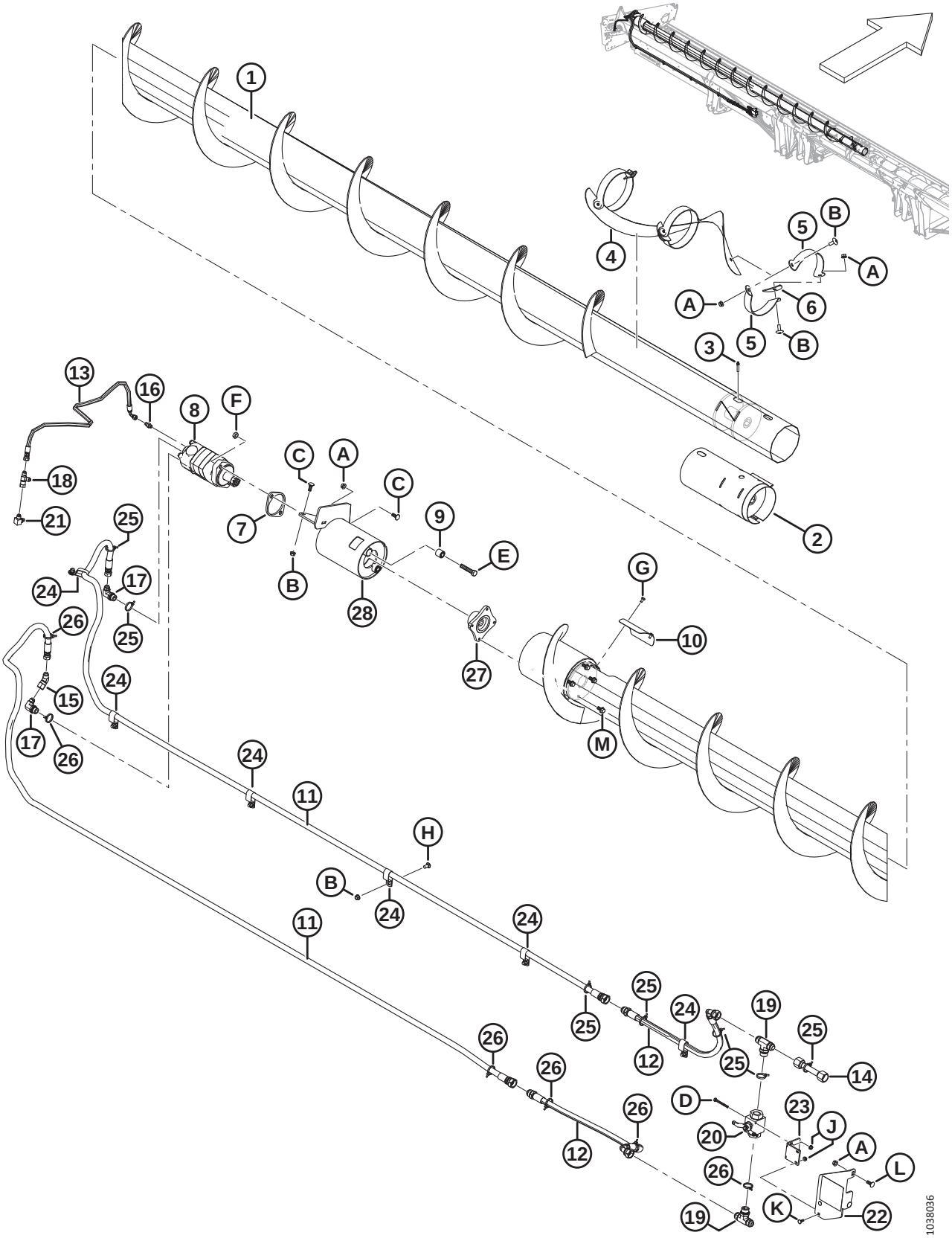

(OPTION) UPPER CROSS AUGER – LEFT END (FD125, FD130, FD135, AND FD140) – 2021 AND PRIOR

Ref	Part Number	Description	Qty	Serial Number
1	326025	AUGER – LH WELDT 25 FT	1	
	294519	AUGER – UCA SP LH WELDT 30 FT	1	
	294517	AUGER – UCA SP LH WELDT 35 FT	1	
	294516	AUGER – UCA SP LH WELDT 40 FT	1	
2	**294682**	**KIT – WELDT UCA REPAIR SLEEVE** [230]	**A/R**	
3	30934	FITTING – 1/4-28 TAPER THD	1	
4	255881	FLIGHTING – LH CENTER	1	
5	294424	SUPPORT – LH	6	
6	255883	PLATE	3	
7	253446	PLATE – SPACER	1	
8	255829	MOTOR – UCA (130 CC) [231]	1	
	283002	MOTOR – EATON 2000 (100 CC) [232]	1	
	174304	SEAL KIT		
	137375	NUT – SLOTTED JAM 1.0-20 UNEF		
9	21810	BUSHING – RUBBER	2	
10	279261	COVER – UCA ACCESS	1	
11	326086	HOSE – HYDRAULIC (25 FT)	2	
	294221	HOSE – HYDRAULIC (30 FT)	2	
	294222	HOSE – HYDRAULIC (35 FT)	2	
	294223	HOSE – HYDRAULIC (40 FT)	2	
12	294226	HOSE – HYDRAULIC	2	
13	254248	HOSE – HYDRAULIC	1	
14	294007	LINE – HYDRAULIC	1	
15	135685	FITTING – ELBOW 45° HYD	1	
16	112184	FITTING – ADAPTER HYD (30-40 FT)	1	
17	21801	FITTING – ELBOW 90° HYD	2	
18	30873	FITTING – HYD TEE	1	
19	50050	FITTING – TEE HYD STR THD BRANCH TEE CW O-RING	2	
20	294263	VALVE – BALL	1	
21	50104	FITTING – ELBOW 90° HYD	1	
22	294814	BRACKET – BV MOUNT C/W DECAL [233]	1	
23	294009	BRACKET – HANGER, VALVE MOUNT	1	
24	103738	CLAMP – PVC INSULATED 13/16 IN. TUBE SIZE	7	
25	252795	FASTENER – CABLE TIE, PINK	7	
26	252794	FASTENER – CABLE TIE, PURPLE	6	
27	253722	HUB – UCA HC MOTOR	1	
28	296556	SUPPORT – ASSEMBLY [234]	1	

230. The kit is for 2021 and prior upper cross augers that use hex shafts at the center support; intended to repair damage to the auger. Welding is required.
231. For use on all SP headers and combine headers not in the European market.
232. For use in European market with increased UCA speed.
233. Bracket includes decal (MD #294813), refer to Section *37 Decals and Reflectors, page 113*.
234. Includes two bushings (MD #21810) and decal (MD #279085).

(OPTION) UPPER CROSS AUGER – LEFT END (FD125, FD130, FD135, AND FD140) – 2021 AND PRIOR

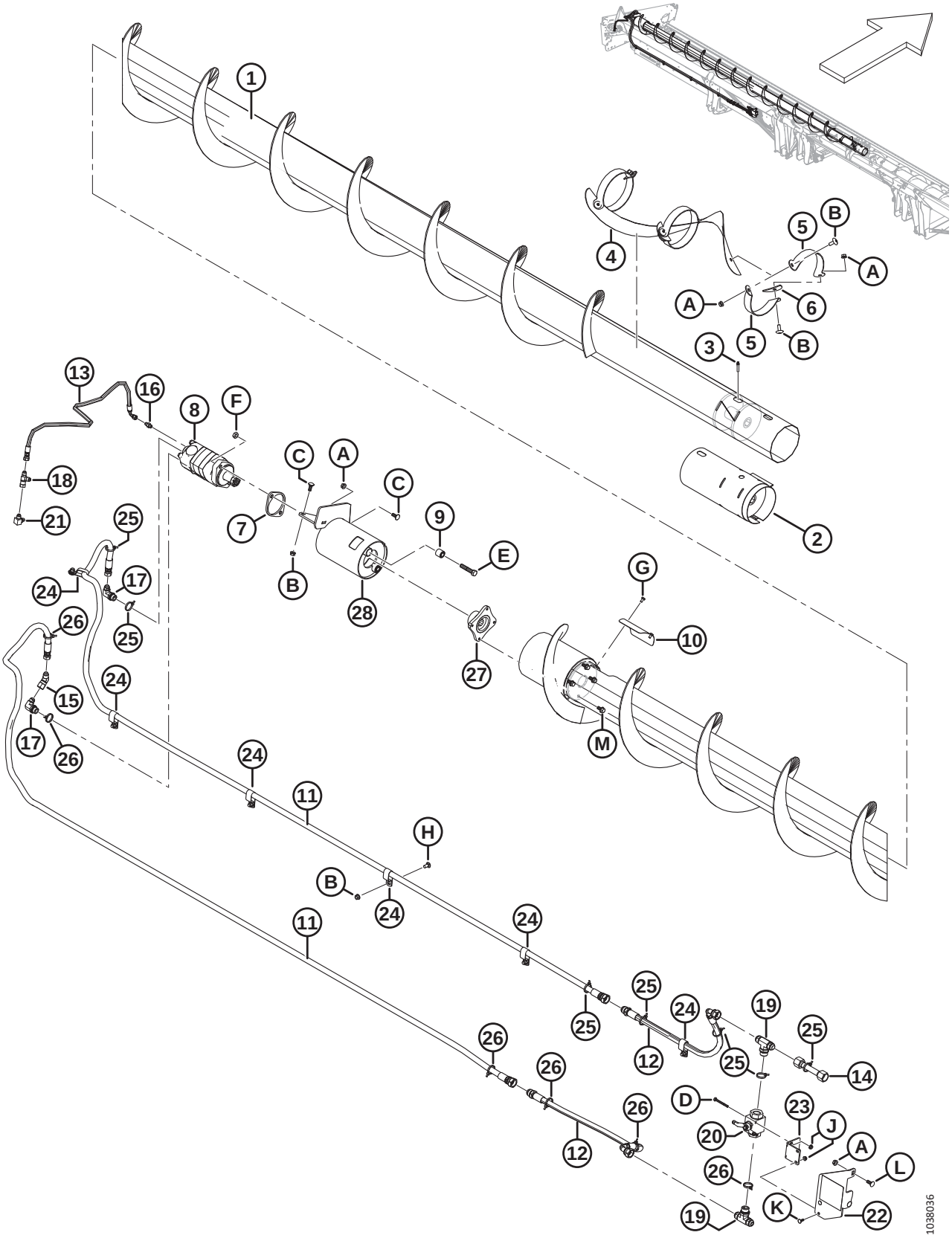

(OPTION) UPPER CROSS AUGER – LEFT END (FD125, FD130, FD135, AND FD140) – 2021 AND PRIOR

Ref	Part Number	Description	Qty	Serial Number
A	30228	NUT – FLANGE DT SMOOTH FACE 0.375-16 UNC		
B	135507	SCREW – MACHINE, TRUSS HD TORX, 3/8 NC X 1 LG		
C	19965	BOLT – RHSN 3/8-16 X 1-GR5-ZP		
D	21854	BOLT – HH 1/4 NC X 2.5 LG GR 5 ZP		
E	21760	BOLT – HH 1/2 NC X 2.5 LG GR 5 ZP		
F	137727	NUT – HEX JAM-DIST THD. 1/2-13 UNC GR 5 ZP		
G	21580	BOLT – HEX HD 1/4 NC X 0.5 LG GR 5 ZP		
H	21863	BOLT – RHSSN 3/8 NC X 0.75 LG GR 5 ZP		
J	135248	NUT – HEX FLG CTR LOC		
K	21476	BOLT – RHSN 1/4-20 X .75-GR5-ZP		
L	100456	BOLT – RHSSN 3/8 NC X 1.0 GR 5 ZP		
M	135963	BOLT – HH FLG (SM FACE) 3/8 NC X 0.75 GR 5 ZP		

67 (Option) Upper Cross Auger – Right End (FD125, FD130, FD135, and FD140) – 2021 and Prior

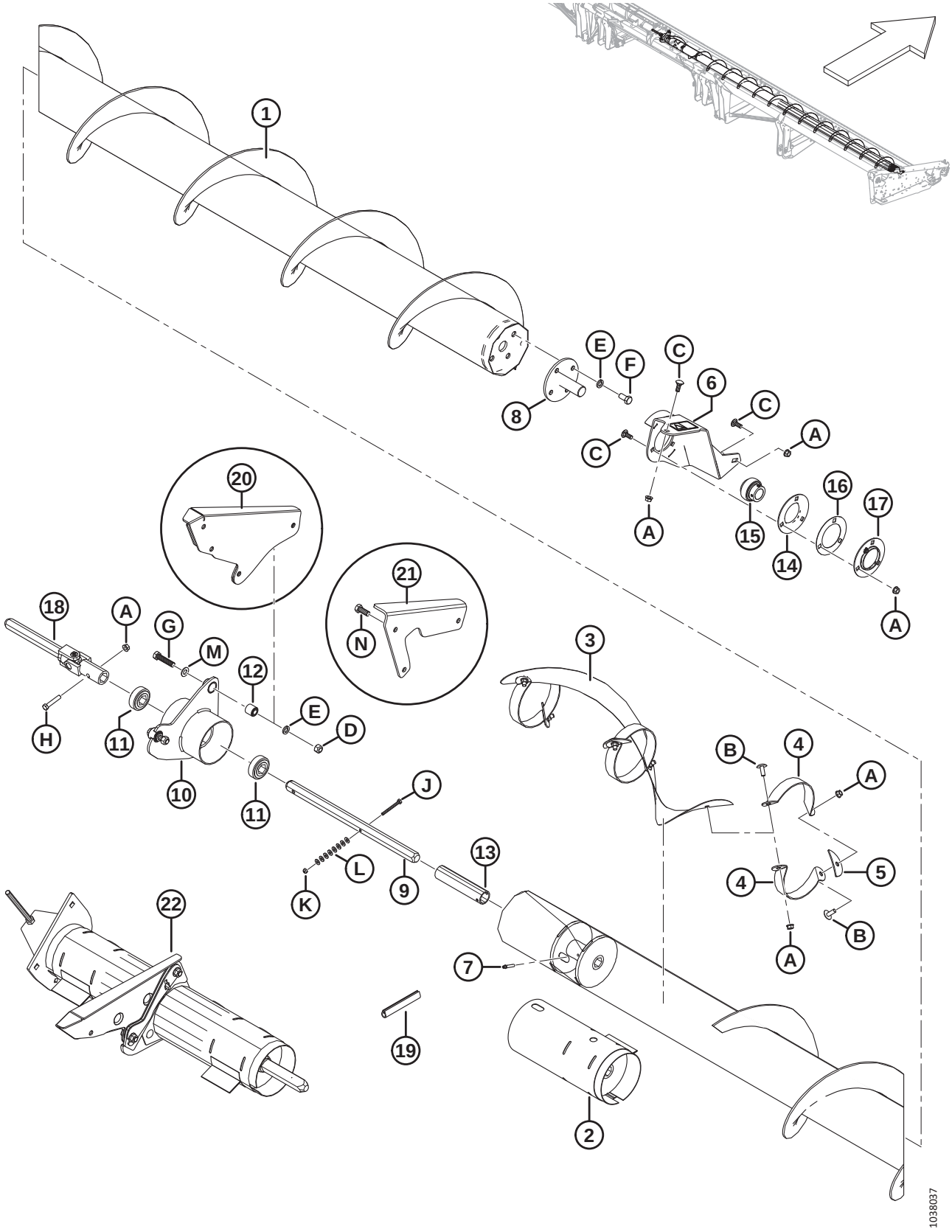

(OPTION) UPPER CROSS AUGER – RIGHT END (FD125, FD130, FD135, AND FD140) – 2021 AND PRIOR

Ref	Part Number	Description	Qty	Serial Number
1	326024	AUGER – UCA RH WELDT 25 FT	1	
	294436	AUGER – UCA RH WELDT 30 FT	1	
	294437	AUGER – UCA HC RH WELDT 35 FT	1	
	294438	AUGER – UCA HC RH WELDT 40 FT	1	
2	**294682**	**KIT – WELDT UCA REPAIR SLEEVE** [235]	**A/R**	
3	294928	FLIGHTING – RH CENTER	1	
4	294425	SUPPORT – RH	6	
5	255883	PLATE	3	
6	296554	SUPPORT – RH UCA ASSY	1	
7	30934	FITTING – 1/4-28 TAPER THD	1	
8	132303	SHAFT – END WELDT	1	
	294677	KIT – DISC, UNPAINTED [236]		
9	174081	SHAFT – HEX	1	
10	172511	SUPPORT – CENTER HANGER ASSY	1	
11	172507	BEARING – BALL HEX BORE	2	
12	21810	BUSHING – RUBBER	2	
13	174082	SPACER	1	
14	49306	FLANGE	1	
15	21859	BEARING – SPH OD EXT INNER RACE 1 3/16 BORE	1	
16	172340	SHIM	1	
17	30661	FLANGE	1	
18	233395	JOINT – UNIVERSAL	1	
19	45427	MOULDING – RH	1	
20	174035	SUPPORT – CENTER WELDT (30-35 FT ONLY) [237]	1	
21	326180	SUPPORT – CENTER UCA (25 FT ONLY) [238]	1	
22	**335589**	**KIT – UCA CENTER SUPPORT REPAIR** [239]	**OPT**	
A	30228	NUT – FLANGE DT SMOOTH FACE 0.375-16 UNC		
B	135507	SCREW – MACHINE, TRUSS HD TORX, 3/8 NC X 1 LG		
C	19965	BOLT – RHSN 3/8-16 X 1-GR5-ZP		
D	18697	NUT – HEX LOCK DT .500-13 UNC		
E	18638	WASHER – REG. LOCK 1/2 IN. NOM. ID ZP		
F	21575	BOLT – HH 1/2 NC X 1.0 LG GR 5 ZP		
G	21578	BOLT – HH 1/2 NC X 2.25 LG GR 5 ZP		

235. The kit is for 2021 and prior upper cross augers that use hex shafts at the center support; intended to repair damage to the auger. Welding is required.
236. Repair part for shaft (MD #132303).
237. Support only required for 30–35 foot headers, 40-foot header has support (MD #172511) attached directly to the header frame.
238. Support only required for 25-foot headers, 40-foot header has support (MD #172511) attached directly to the header frame.
239. Kit is used to upgrade the center support assembly on 2-piece upper cross augers. Replaces U-joint (MD #233395), center support (MD #172511), bearings (MD #172507), hex shaft (MD 174081), spacer (MD #174082), and hardware. Includes two repair sleeve kits (MD #NSS). Refer to Section *70 (Option) Upper Cross Auger – Center Support Repair Kit, page 197*.

(OPTION) UPPER CROSS AUGER – RIGHT END (FD125, FD130, FD135, AND FD140) – 2021 AND PRIOR

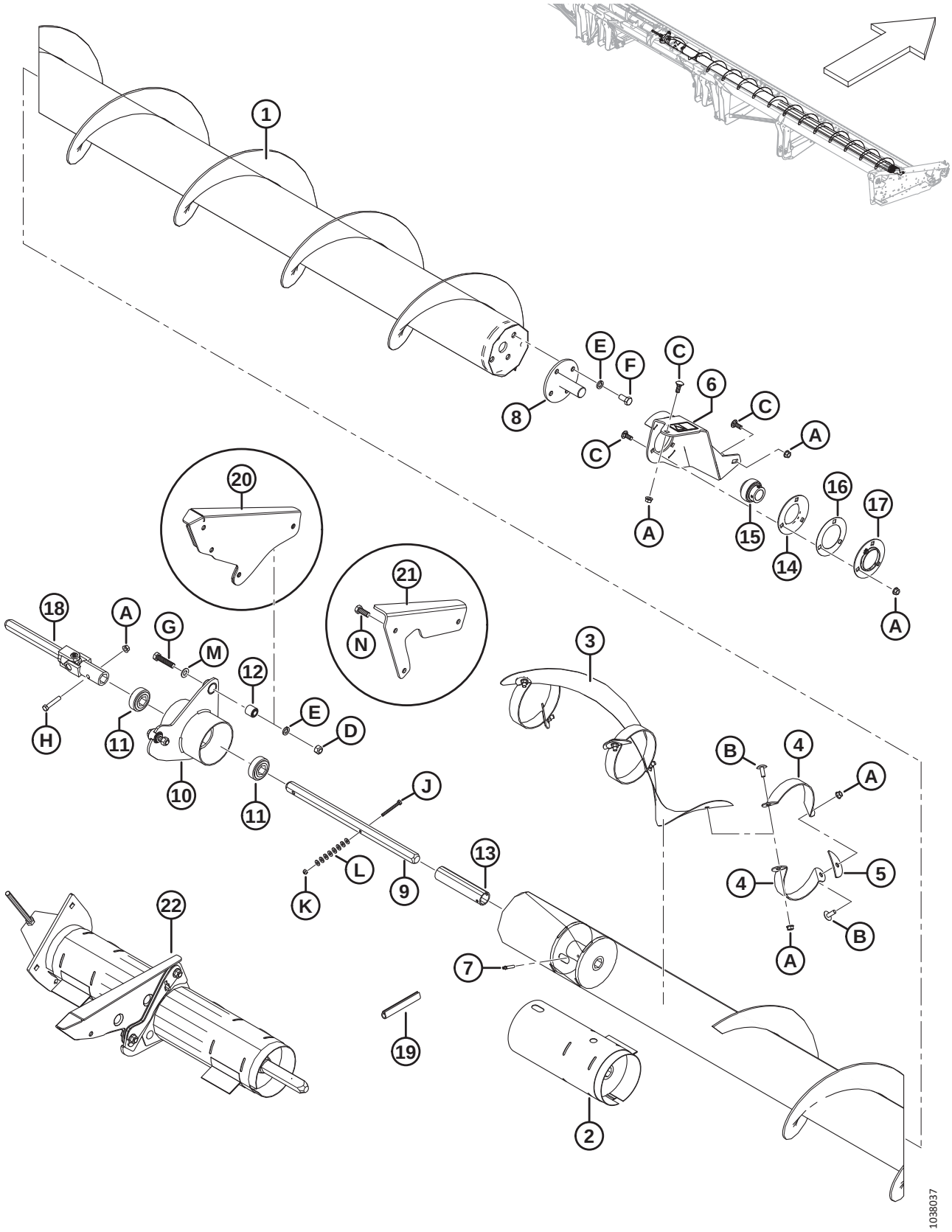

(OPTION) UPPER CROSS AUGER – RIGHT END (FD125, FD130, FD135, AND FD140) – 2021 AND PRIOR

Ref	Part Number	Description	Qty	Serial Number
H	21354	BOLT – HH 3/8 NC X 2.0 LG GR 5 ZP		
J	21854	BOLT – HH 1/4 NC X 2.5 LG GR 5 ZP		
K	18724	NUT – HEX LOCK DT 1/4-20 UNC ZP		
L	18596	WASHER – SAE FLAT 9/32 ID X 5/8 IN OD ZP		
M	184589	WASHER – FLAT 9/16 X 1.375 AA1J		
N	21491	BOLT – HEX HD 1/2-13 X 1.25 GR5-AA1J		

68 (Option) Upper Cross Auger – Left End (FD145) – 2021 and Prior

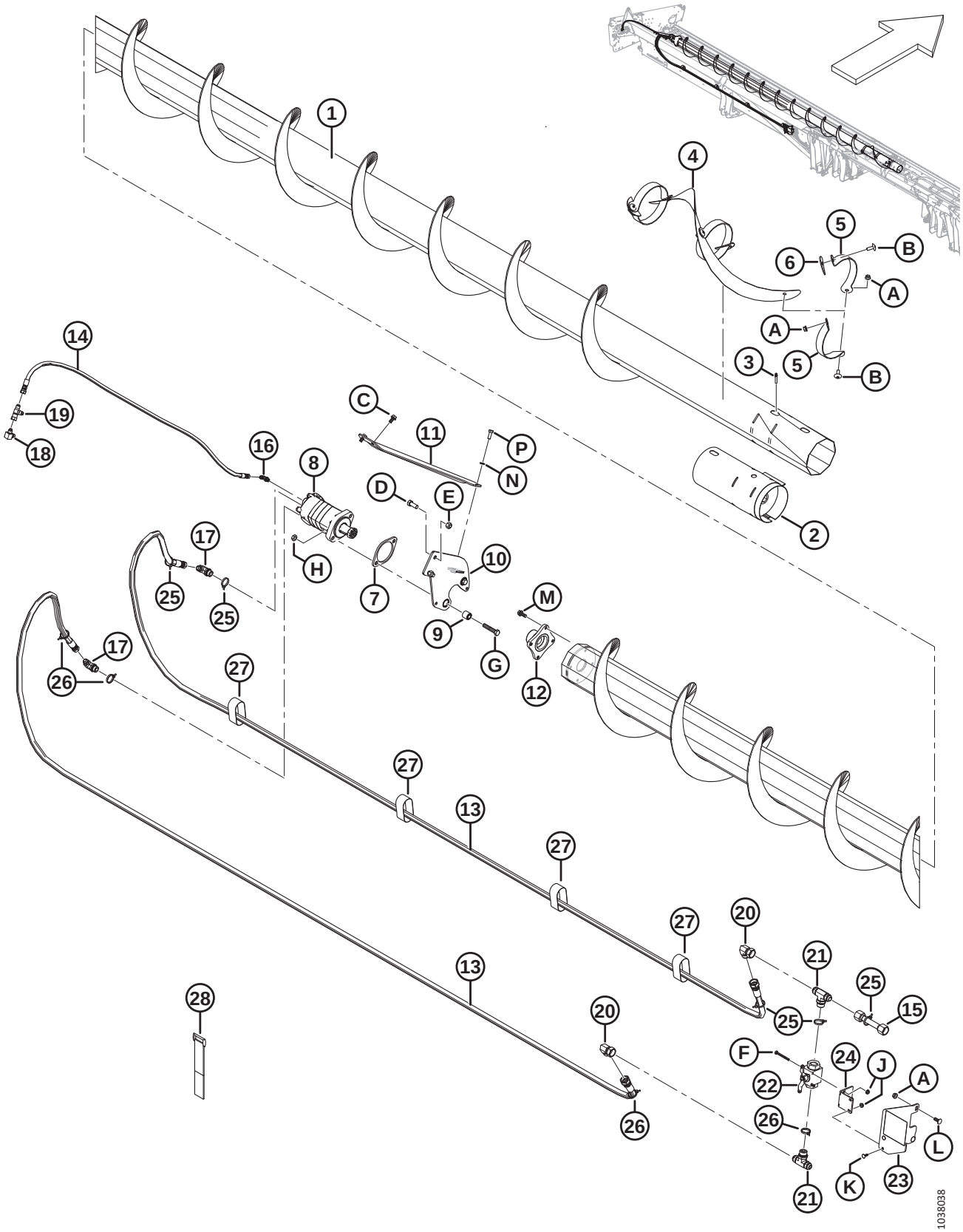

(OPTION) UPPER CROSS AUGER – LEFT END (FD145) – 2021 AND PRIOR

Ref	Part Number	Description	Qty	Serial Number
1	294515	AUGER – UCA LH WELDT 45 FT	1	
2	**294682**	**KIT – WELDT UCA REPAIR SLEEVE** [240]	**A/R**	
3	30934	FITTING – 1/4-28 TAPER THD	1	
4	255881	FLIGHTING – LH CENTER	1	
5	294424	SUPPORT – LH	6	
6	255883	PLATE	3	
7	253446	PLATE – SPACER	1	
8	255829	MOTOR – UCA (130 CC) [241]	1	
	283002	MOTOR – EATON 2000 (100 CC) [242]	1	
	174304	SEAL KIT		
	137375	NUT – SLOTTED JAM 1.0-20 UNEF		
9	21810	BUSHING – RUBBER	2	
10	174168	SUPPORT – LH HANGER ASSY	1	
11	279925	BRACE – LH	1	
12	**279775**	**HUB – MACHINING**	**1**	
13	294224	HOSE – HYDRAULIC	2	
14	294225	HOSE – HYDRAULIC	1	
15	294007	LINE – HYDRAULIC	1	
16	135647	FITTING – ELBOW 90° HYD	1	
17	21801	FITTING – ELBOW 90° HYD	2	
18	50104	FITTING – ELBOW 90° HYD	1	
19	30873	FITTING – HYD TEE	1	
20	50175	FITTING – ELBOW 90° HYD	2	
21	50050	FITTING – TEE HYD STR THD BRANCH TEE C/W O-RING	2	
22	294263	VALVE – BALL	1	
23	294814	BRACKET – BV MOUNT C/W DECAL [243]	1	
24	294009	BRACKET – HANGER, VALVE MOUNT	1	
25	252795	FASTENER – CABLE TIE, PINK	5	
26	252794	FASTENER – CABLE TIE, PURPLE	4	
27	135444	CINCH STRAP 6 IN. LG	4	
28	135443	CINCH STRAP 4 IN. LG	3	
A	30228	NUT – FLANGE DT SMOOTH FACE 0.375-16 UNC		
B	135507	SCREW – MACHINE,TRUSS HD TORX, 3/8 NC X 1LG		
C	101897	SCREW – HEX WASH HD THD ROLLING 3/8 NC X 3/4		
D	21491	BOLT – HH 1/2 NC X 1.25 LG GR 5 ZP		
E	18697	NUT – HEX LOCK DT .500-13 UNC		
F	21854	BOLT – HH 1/4 NC X 2.5 LG GR 5 ZP		
G	21760	BOLT – HH 1/2 NC X 2.5 LG GR 5 ZP		

240. The kit is for 2021 and prior upper cross augers that use hex shafts at the center support; intended to repair damage to the auger. Welding is required.
241. For use on all SP headers and combine headers not in the European market.
242. For use in European market with increased UCA speed.
243. Bracket includes decal (MD #294813), refer to Section *37 Decals and Reflectors, page 113*.

(OPTION) UPPER CROSS AUGER – LEFT END (FD145) – 2021 AND PRIOR

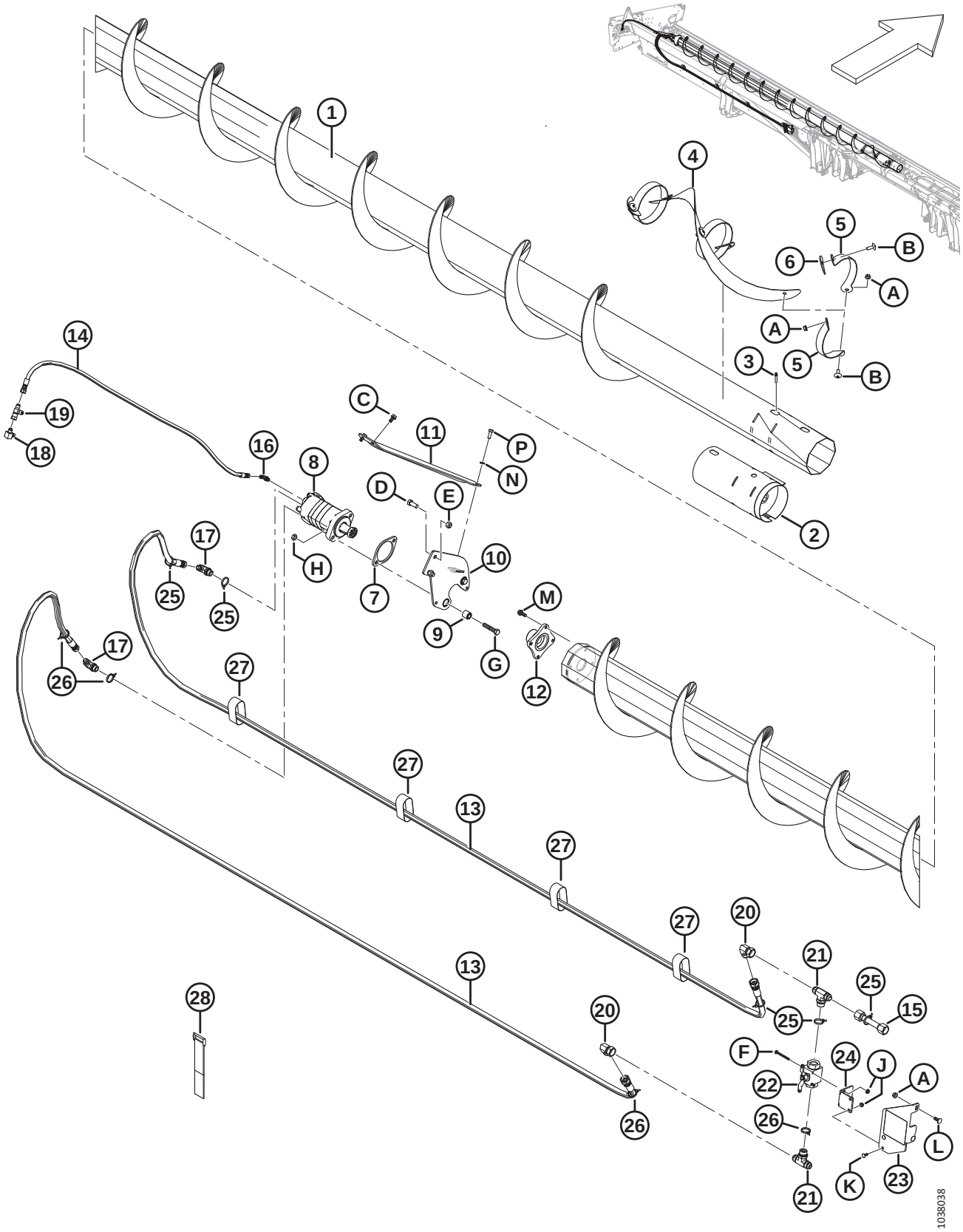

(OPTION) UPPER CROSS AUGER – LEFT END (FD145) – 2021 AND PRIOR

Ref	Part Number	Description	Qty	Serial Number
H	137727	NUT – HEX JAM-DIST THD. 1/2-13 UNC GR 5 ZP		
J	135248	NUT – HEX FLG CTR LOC		
K	21476	BOLT – RHSN 1/4-20 X .75-GR5-ZP		
L	100456	BOLT – RHSSN 3/8 NC X 1.0 GR 5 ZP		
M	135193	SCREW – HEX WASH HD THD ROLLING 3/8 NC X 1.0		
N	18637	WASHER – REG. LOCK 3/8 IN. NOM. ID ZP		
P	20077	BOLT – HEX HD 3/8 NC X 1.0 LG GR 5 ZP		

69 (Option) Upper Cross Auger – Right End (FD145) – 2021 and Prior

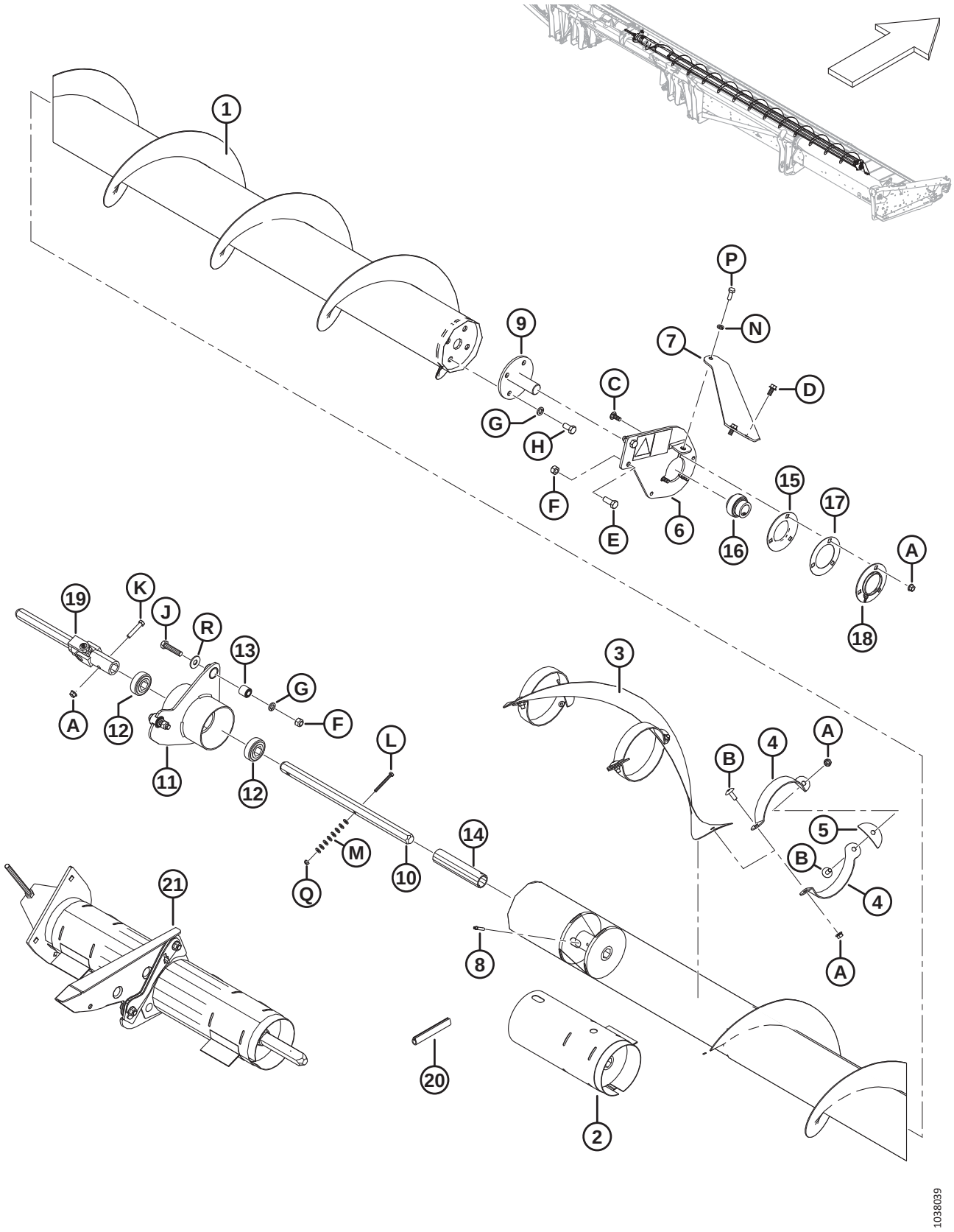

(OPTION) UPPER CROSS AUGER – RIGHT END (FD145) – 2021 AND PRIOR

Ref	Part Number	Description	Qty	Serial Number
1	294518	AUGER – UCA RH WELDT 45 FT	1	
2	**294682**	**KIT – WELDT UCA REPAIR SLEEVE** [244]	**A/R**	
3	294928	FLIGHTING – RH CENTER	1	
4	294425	SUPPORT – RH	6	
5	255883	PLATE	3	
6	174176	SUPPORT RH – DECAL ASSY	1	
7	279926	BRACE – RH	1	
8	30934	FITTING – 1/4-28 TAPER THD	1	
9	132303	SHAFT – END WELDT	1	
	294677	KIT – DISC, UNPAINTED [245]		
10	174081	SHAFT – HEX	1	
11	172511	SUPPORT – CENTER HANGER ASSY	1	
12	172507	BEARING – BALL HEX BORE	2	
13	21810	BUSHING – RUBBER	2	
14	174082	SPACER	1	
15	49306	FLANGE	1	
16	21859	BEARING – SPH OD EXT INNER RACE 1 3/16 BORE	1	
17	172340	SHIM	1	
18	30661	FLANGE	1	
19	233395	JOINT – UNIVERSAL	1	
20	45427	MOULDING-RH	1	
21	**335589**	**KIT – UCA CENTER SUPPORT REPAIR** [246]	**OPT**	
A	30228	NUT – FLANGE DT SMOOTH FACE 0.375-16 UNC		
B	135507	SCREW – MACHINE,TRUSS HD TORX,38NC X 1LG		
C	19965	BOLT – RHSN 3/8-16 X 1-GR5-ZP		
D	101897	SCREW – HEX WASH HD THD ROLLING 3/8 NC X 3/4		
E	21491	BOLT – HH 1/2 NC X 1.25 LG GR 5 ZP		
F	18697	NUT – HEX LOCK DT .500-13UNC		
G	18638	WASHER – REG. LOCK 1/2 IN. NOM. ID ZP		
H	21575	BOLT – HH 1/2 NC X 1.0 LG GR 5 ZP		
J	21578	BOLT – HH 1/2 NC X 2.25 LG GR 5 ZP		
K	21354	BOLT – HH 3/8 NC X 2.0 LG GR 5 ZP		
L	21854	BOLT – HH 1/4 NC X 2.5 LG GR 5 ZP		
M	18596	WASHER – SAE FLAT 9/32 ID X 5/8 IN OD ZP		
N	18637	WASHER – REG. LOCK 3/8 IN. NOM. ID ZP		
P	20077	BOLT – HEX HD 3/8 NC X 1.0 LG GR 5 ZP		

244. The kit is for 2021 and prior upper cross augers that use hex shafts at the center support; intended to repair damage to the auger. Welding is required.
245. Repair part for shaft (MD #132303).
246. Kit is used to upgrade the center support assembly on 2-piece upper cross augers. Replaces U-joint (MD #233395), center support (MD #172511), bearings (MD #172507), hex shaft (MD 174081), spacer (MD #174082), and hardware. Includes two repair sleeve kits (MD #NSS). Refer to Section *70 (Option) Upper Cross Auger – Center Support Repair Kit, page 197*.

(OPTION) UPPER CROSS AUGER – RIGHT END (FD145) – 2021 AND PRIOR

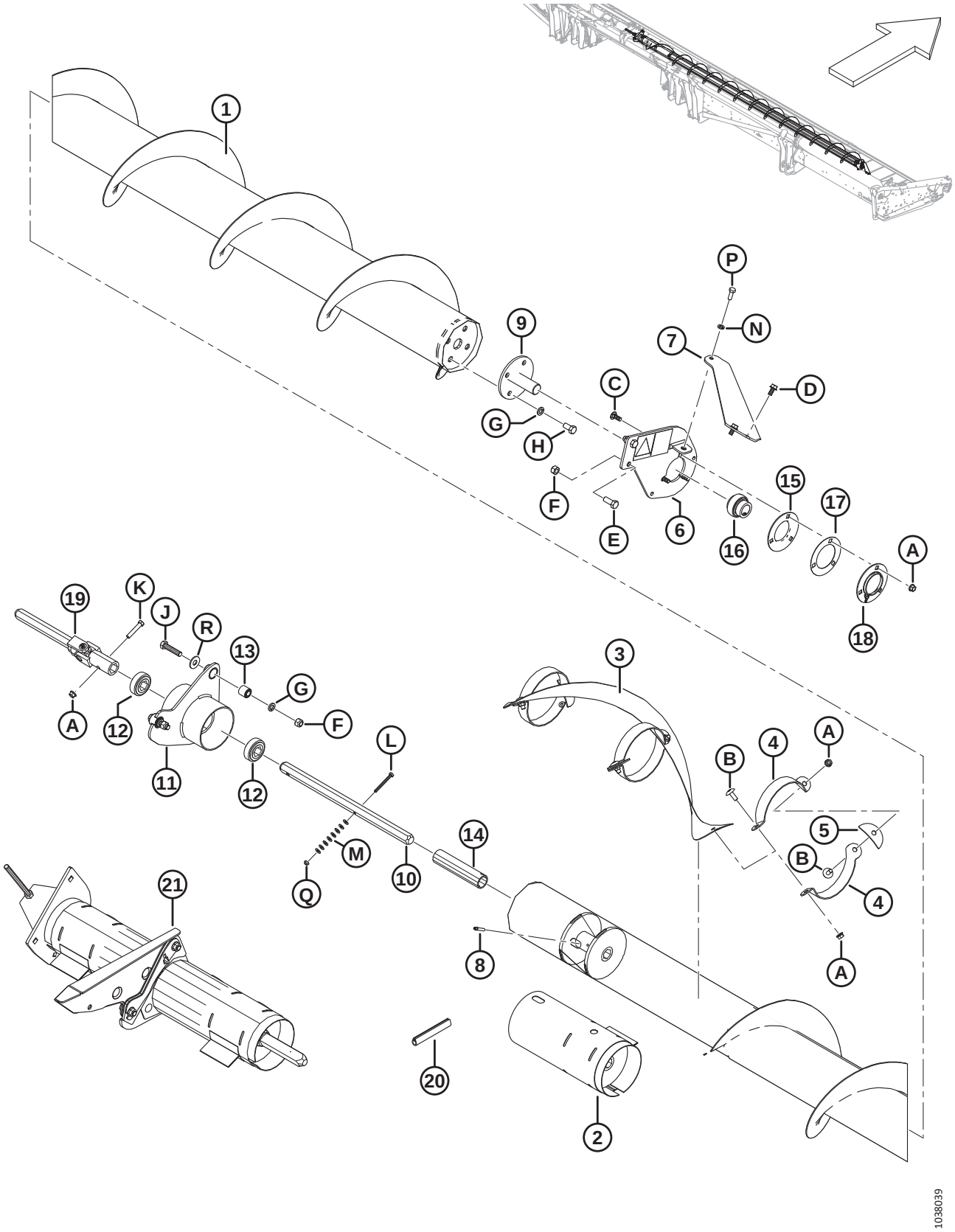

(OPTION) UPPER CROSS AUGER – RIGHT END (FD145) – 2021 AND PRIOR

Ref	Part Number	Description	Qty	Serial Number
Q	18724	NUT – HEX LOCK DT 1/4-20 UNC ZP		
R	**184589**	**WASHER – FLAT 9/16 X 1.375 AA1J**		

70 (Option) Upper Cross Auger – Center Support Repair Kit

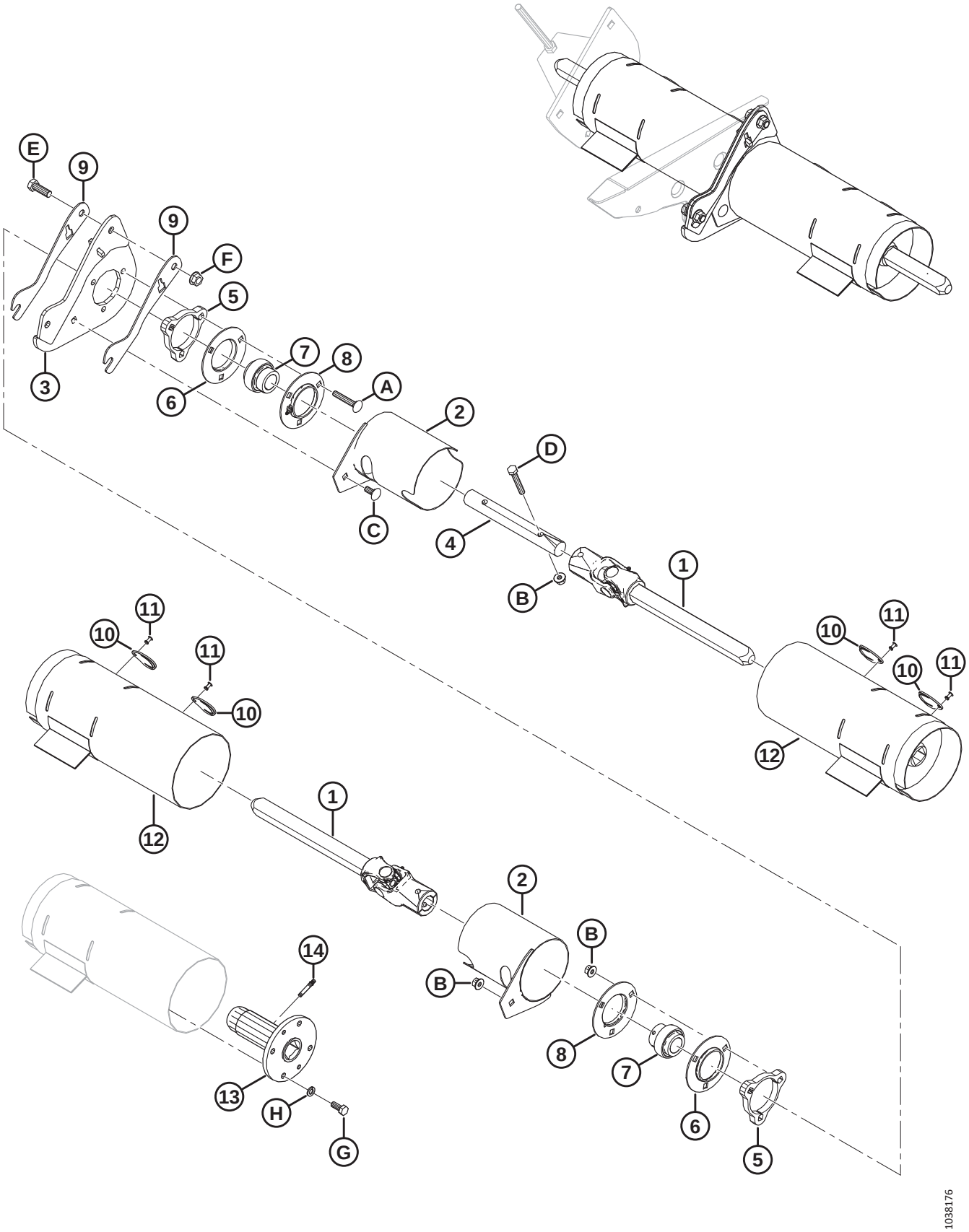

(OPTION) UPPER CROSS AUGER – CENTER SUPPORT REPAIR KIT

NOTE:

The UCA Center Support Repair kit (MD #335589) is used to upgrade upper cross augers that currently have center support assembly (MD #172511) and hex shafts installed. The new center support assembly included in this kit uses square shafts, which will improve shaft and hub life.

Ref	Part Number	Description	Qty	Serial Number
	335589	KIT – UCA CENTER SUPPORT REPAIR [247]		
1	233513	JOINT – UNIVERSAL	2	
2	233371	GUARD – WELDT	2	
3	335615	SUPPORT – BEARING MOUNT WELDT	1	
4	233519	SHAFT	1	
5	233450	PLATE – SPACER	2	
6	49306	FLANGE	2	
7	21859	BEARING – SPH OD EXT INNER RACE 1 3/16 BORE	2	
8	30661	FLANGE	2	
9	335625	SHIM – UCA CENTER SUPPORT	2	
10	233625	COVER	4	
11	18768	RIVET – BLIND Ø0.188 IN. X 0.251 TO 0.375 GRIP RANGE	4	
12	NSS	KIT – UCA REPAIR SLEEVE [248]	2	
13	233514	HUB – WELDT UCA SLIDING	2	
14	30934	FITTING – 1/4 28 TAPER THD	2	
	335622	SUPPORT – SR CENTER WELDT (NOT ILLUSTRATED) [249]		
	335610	SUPPORT – CENTER UCA (NOT ILLUSTRATED) [250]		
A	136113	BOLT – RHSN M10 X 1.5 X 60-8.8-AA1J		
B	135799	NUT – HEX FLG CTR LOC M10 X 1.5-10		
C	135785	BOLT – RHSN M10 X 1.5 X 25-8.8-AA1J		
D	108172	BOLT – HEX HD M10 X 1.5 X 65-8.8-AA1J		
E	18723	BOLT – HEX HD 1/2-13 X 1.5 GR5-AA1J		
F	50186	NUT – FLG LK DT 1/2-13 UNC GR5 AA1J		
G	30627	BOLT – HEX HD TFL M10 X 1.5 X 25-8.8-A3L		
H	30632	WASHER – LOCK SPRING M10		

247. The kit includes all listed parts.
248. Includes repair sleeve (MD #NSS), sliding hub (MD #233514), grease fitting (MD #30934), four bolts (MD #30627), and four lock washers (MD #30632).
249. Included in the kit but is not used on FD1 headers; used on D65 and D1 single reel headers only.
250. Included in the kit but is not used on FD1 headers; used on 972, 973, and 974 headers only.

71 (Option) Upper Cross Auger – Left End (FD125, FD130, FD135, and FD140) – 2022

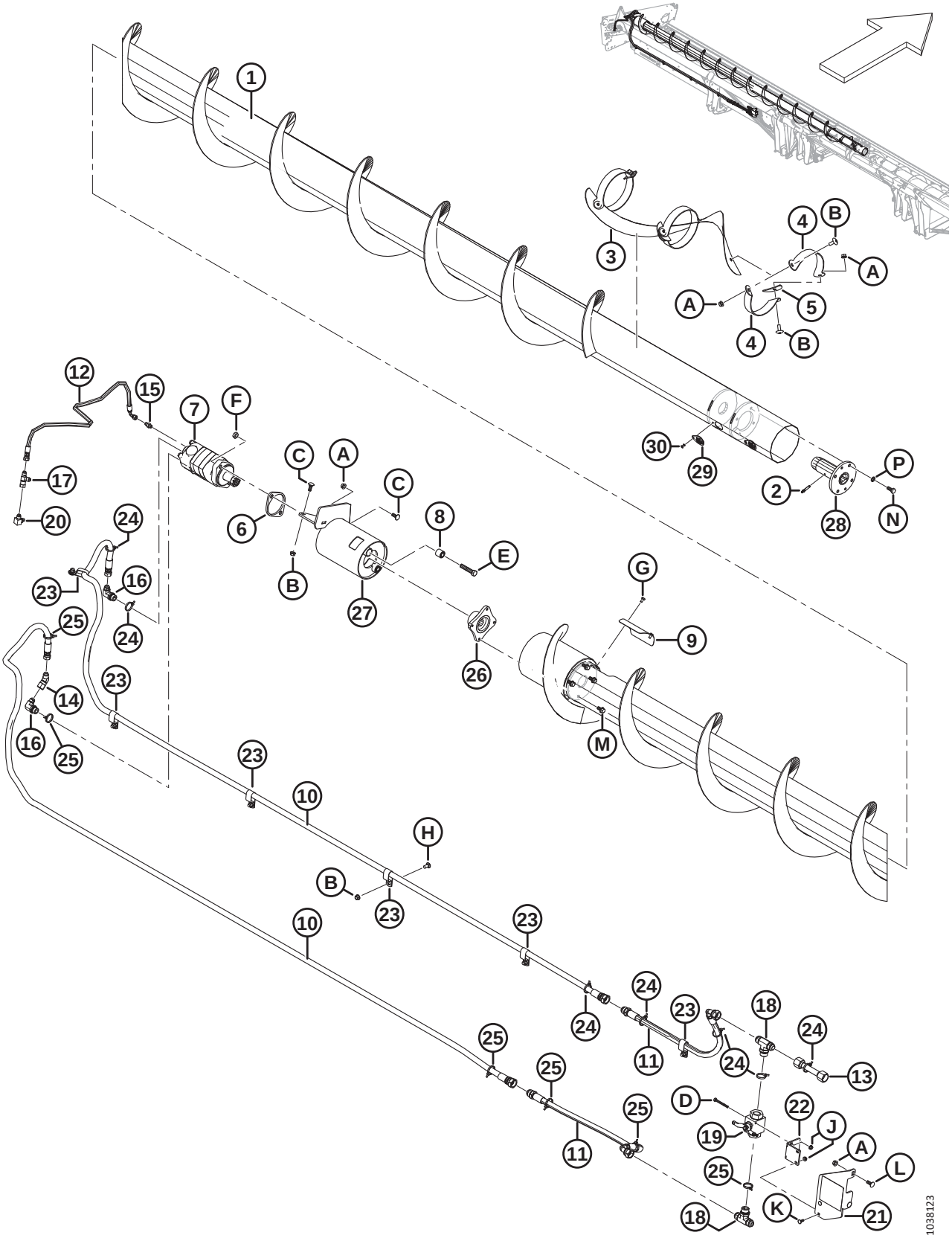

(OPTION) UPPER CROSS AUGER – LEFT END (FD125, FD130, FD135, AND FD140) – 2022

Ref	Part Number	Description	Qty	Serial Number
	B9012	KIT – 1 SERIES 25 FT UCA (NORTH AMERICA) [251]		
	B9011	KIT – 1 SERIES 30 FT UCA (NORTH AMERICA) [251]		
	B9010	KIT – 1 SERIES 35 FT UCA (NORTH AMERICA) [251]		
	B9009	KIT – 1 SERIES 40 FT UCA (NORTH AMERICA) [251]		
	B9044	KIT – 1 SERIES COMBINE 25 FT UCA (EUROPE) [251]		
	B9045	KIT – 1 SERIES COMBINE 30 FT UCA (EUROPE) [251]		
	B9046	KIT – 1 SERIES COMBINE 35 FT UCA (EUROPE) [251]		
	B9047	KIT – 1 SERIES COMBINE 40 FT UCA (EUROPE) [251]		
1	335708	AUGER – LH WELDT 25 FT	1	
	335336	AUGER – UCA SP LH WELDT 30 FT	1	
	335707	AUGER – UCA SP LH WELDT 35 FT	1	
	335478	AUGER – UCA SP LH WELDT 40 FT	1	
2	30934	FITTING – 1/4-28 TAPER THD	1	
3	335719	FLIGHTING – LH CENTER	1	
4	294424	SUPPORT – LH	6	
5	255883	PLATE	3	
6	253446	PLATE – SPACER	1	
7	255829	MOTOR – UCA (130 CC) [252]	1	
	283002	MOTOR – EATON 2000 (100 CC) [253]	1	
	174304	SEAL KIT		
	137375	NUT – SLOTTED JAM 1.0-20 UNEF		
8	21810	BUSHING – RUBBER	2	
9	279261	COVER – UCA ACCESS	1	
10	326086	HOSE – HYDRAULIC (25 FT)	2	
	294221	HOSE – HYDRAULIC (30 FT)	2	
	294222	HOSE – HYDRAULIC (35 FT)	2	
	294223	HOSE – HYDRAULIC (40 FT)	2	
11	294226	HOSE – HYDRAULIC	2	
12	254248	HOSE – HYDRAULIC	1	
13	294007	LINE – HYDRAULIC	1	
14	135685	FITTING – ELBOW 45° HYD	1	
15	112184	FITTING – ADAPTER HYD (30-40 FT)	1	
16	21801	FITTING – ELBOW 90° HYD	2	
17	30873	FITTING – HYD TEE	1	
18	50050	FITTING – TEE HYD STR THD BRANCH TEE CW O-RING	2	
19	294263	VALVE – BALL	1	
20	50104	FITTING – ELBOW 90° HYD	1	
21	294814	BRACKET – BV MOUNT C/W DECAL [254]	1	

251. Kits available through Whole Goods only.
252. For use on all SP headers and combine headers not in the European market.
253. For use in European market with increased UCA speed.
254. Bracket includes decal (MD #294813), refer to Section *37 Decals and Reflectors, page 113*.

(OPTION) UPPER CROSS AUGER – LEFT END (FD125, FD130, FD135, AND FD140) – 2022

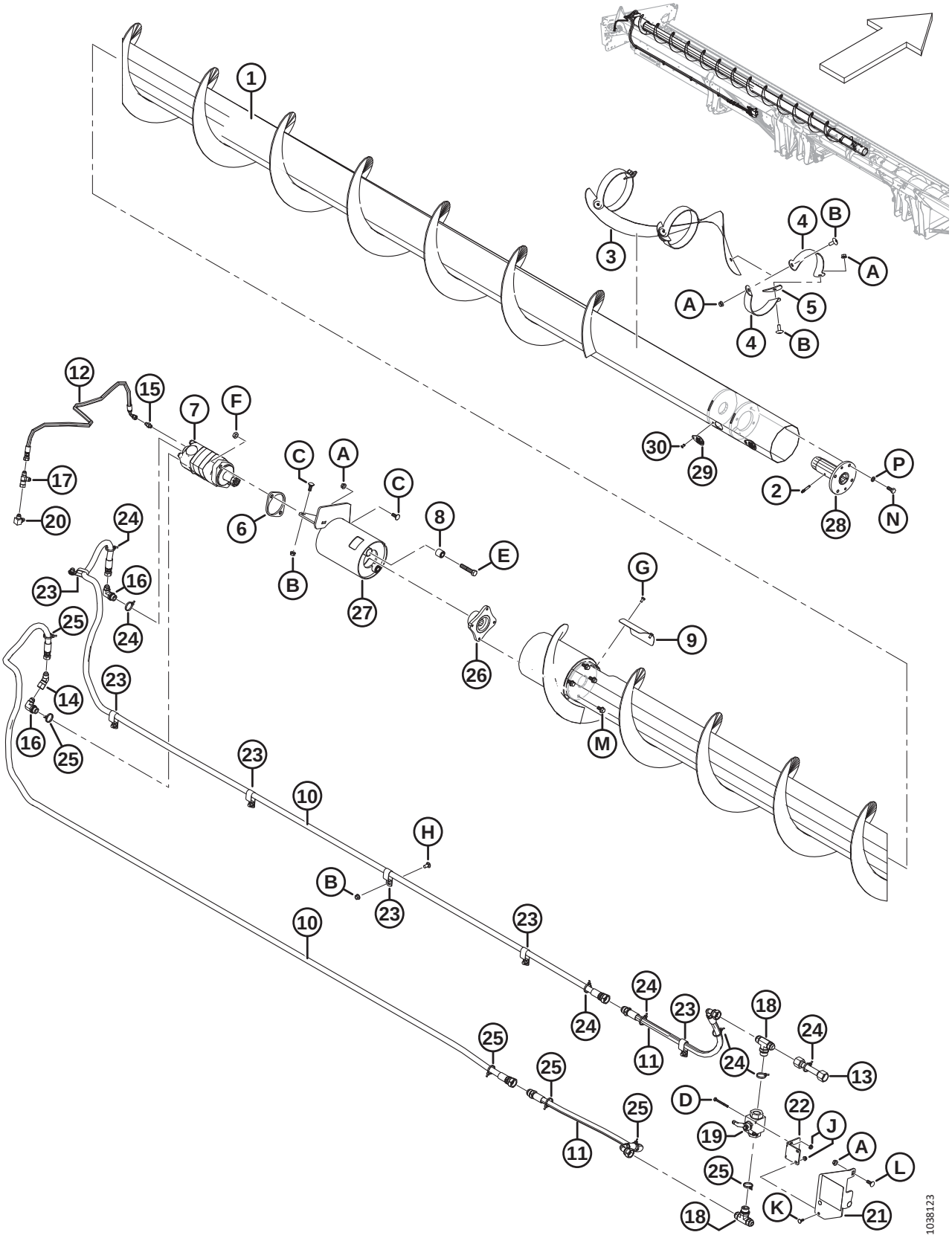

(OPTION) UPPER CROSS AUGER – LEFT END (FD125, FD130, FD135, AND FD140) – 2022

Ref	Part Number	Description	Qty	Serial Number
22	294009	BRACKET – HANGER, VALVE MOUNT	1	
23	103738	CLAMP – PVC INSULATED 13/16 IN. TUBE SIZE	7	
24	252795	FASTENER – CABLE TIE, PINK	7	
25	252794	FASTENER – CABLE TIE, PURPLE	6	
26	253722	HUB – UCA HC MOTOR	1	
27	296556	SUPPORT – ASSEMBLY [255]	1	
28	233514	HUB – WELDT UCA SLIDING	1	
29	233625	COVER	2	
30	18768	RIVET – BLIND Ø0.188 IN. X 0.251 TO 0.375 GRIP RANGE	2	
A	30228	NUT – FLANGE DT SMOOTH FACE 0.375-16 UNC		
B	135507	SCREW – MACHINE, TRUSS HD TORX, 3/8 NC X 1 LG		
C	19965	BOLT – RHSN 3/8-16 X 1-GR5-ZP		
D	21854	BOLT – HH 1/4 NC X 2.5 LG GR 5 ZP		
E	21760	BOLT – HH 1/2 NC X 2.5 LG GR 5 ZP		
F	137727	NUT – HEX JAM-DIST THD. 1/2-13 UNC GR 5 ZP		
G	21580	BOLT – HEX HD 1/4 NC X 0.5 LG GR 5 ZP		
H	21863	BOLT – RHSSN 3/8 NC X 0.75 LG GR 5 ZP		
J	135248	NUT – HEX FLG CTR LOC		
K	21476	BOLT – RHSN 1/4-20 X .75-GR5-ZP		
L	100456	BOLT – RHSSN 3/8 NC X 1.0 GR 5 ZP		
M	135963	BOLT – HH FLG (SM FACE) 3/8 NC X 0.75 GR 5 ZP		
N	30627	BOLT – HEX HD TFL M10 X 1.5 X 25-8.8-A3L		
P	30632	WASHER – LOCK SPRING M10		

255. Includes two bushings (MD #21810) and decal (MD #279085).

72 (Option) Upper Cross Auger – Right End (FD125, FD130, FD135, and FD140) – 2022

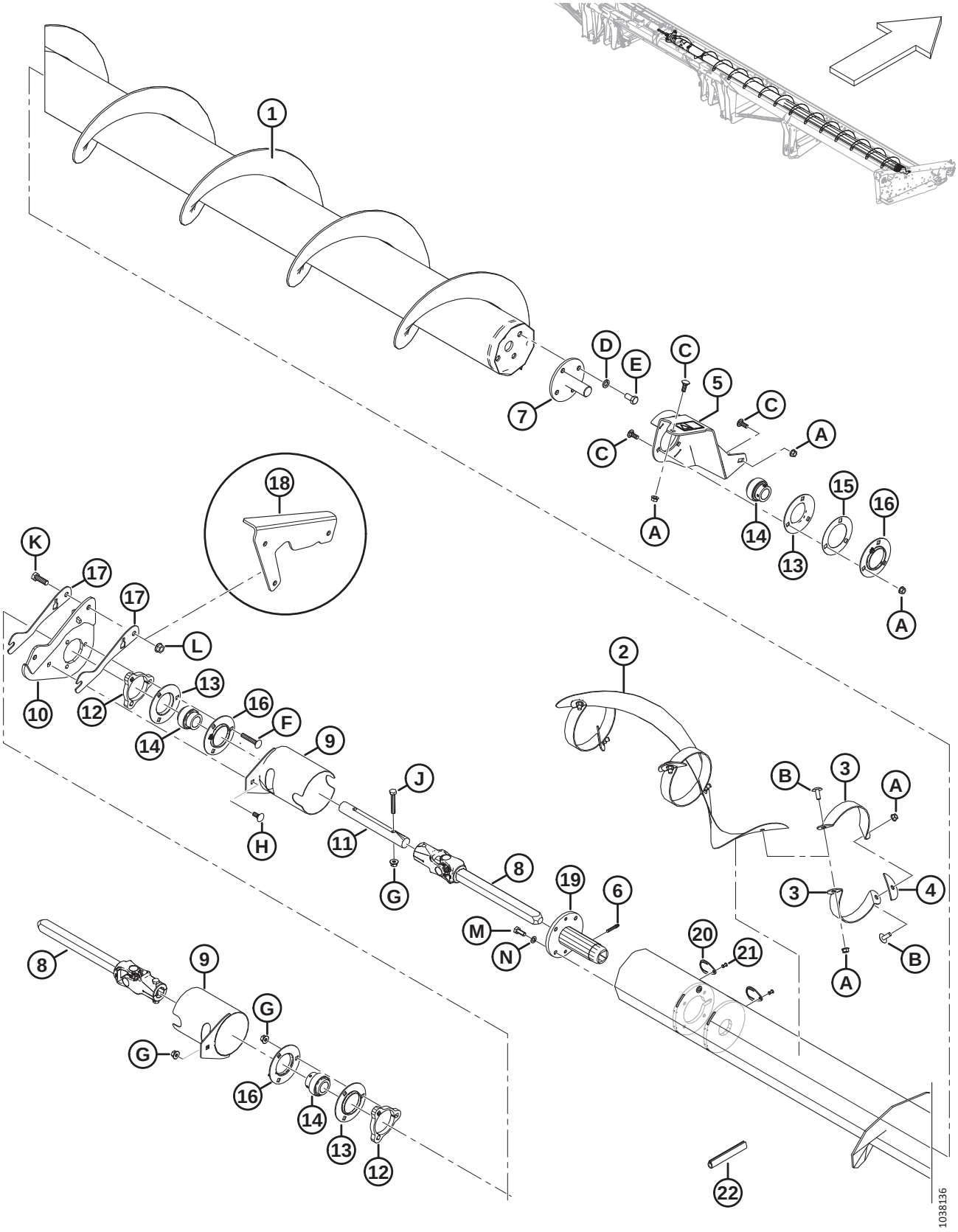

(OPTION) UPPER CROSS AUGER – RIGHT END (FD125, FD130, FD135, AND FD140) – 2022

Ref	Part Number	Description	Qty	Serial Number
1	335687	AUGER – UCA RH WELDT 25 FT	1	
	335337	AUGER – UCA RH WELDT 30 FT	1	
	335686	AUGER – UCA HC RH WELDT 35 FT	1	
	335480	AUGER – UCA HC RH WELDT 40 FT	1	
2	335592	FLIGHTING – RH CENTER	1	
3	294425	SUPPORT – RH	6	
4	255883	PLATE	3	
5	296554	SUPPORT – RH UCA ASSY [256]	1	
6	30934	FITTING – 1/4-28 TAPER THD	1	
7	132303	SHAFT – END WELDT	1	
	294677	KIT – DISC, UNPAINTED [257]		
8	233513	JOINT – UNIVERSAL	2	
9	233371	GUARD – WELDT	2	
10	335615	SUPPORT – BEARING MOUNT WELDT	1	
11	233519	SHAFT	1	
12	233450	PLATE – SPACER	2	
13	49306	FLANGE	3	
14	21859	BEARING – SPH OD EXT INNER RACE 1 3/16 BORE	3	
15	172340	SHIM	1	
16	30661	FLANGE	3	
17	335625	SHIM – UCA CENTER SUPPORT	2	
18	335635	SUPPORT – CENTER UCA (25 FT ONLY)	1	
19	233514	HUB – WELDT UCA SLIDING	1	
20	233625	COVER	2	
21	18768	RIVET – BLIND Ø0.188 IN. X 0.251 TO 0.375 GRIP RANGE	2	
22	45427	MOULDING – RH	1	
A	30228	NUT – FLANGE DT SMOOTH FACE 0.375-16 UNC		
B	135507	SCREW – MACHINE, TRUSS HD TORX, 3/8 NC X 1 LG		
C	19965	BOLT – RHSN 3/8-16 X 1-GR5-ZP		
D	18638	WASHER – REG. LOCK 1/2 IN. NOM. ID ZP		
E	21575	BOLT – HH 1/2 NC X 1.0 LG GR 5 ZP		
F	136113	BOLT – RHSN M10 X 1.5 X 60-8.8-AA1J		
G	135799	NUT – HEX FLG CTR LOC M10 X 1.5-10		
H	135785	BOLT – RHSN M10 X 1.5 X 25-8.8-AA1J		
J	108172	BOLT – HEX HD M10 X 1.5 X 65-8.8-AA1J		
K	18723	BOLT – HEX HD 1/2-13 X 1.5 GR5-AA1J		
L	50186	NUT – FLG LK DT 1/2-13 UNC GR5 AA1J		
M	30627	BOLT – HEX HD TFL M10 X 1.5 X 25-8.8-A3L		
N	30632	WASHER – LOCK SPRING M10		

256. Includes warning decal (MD #279085).
257. Repair part for shaft (MD #132303).

73 (Option) Upper Cross Auger – Left End (FD145) – 2022

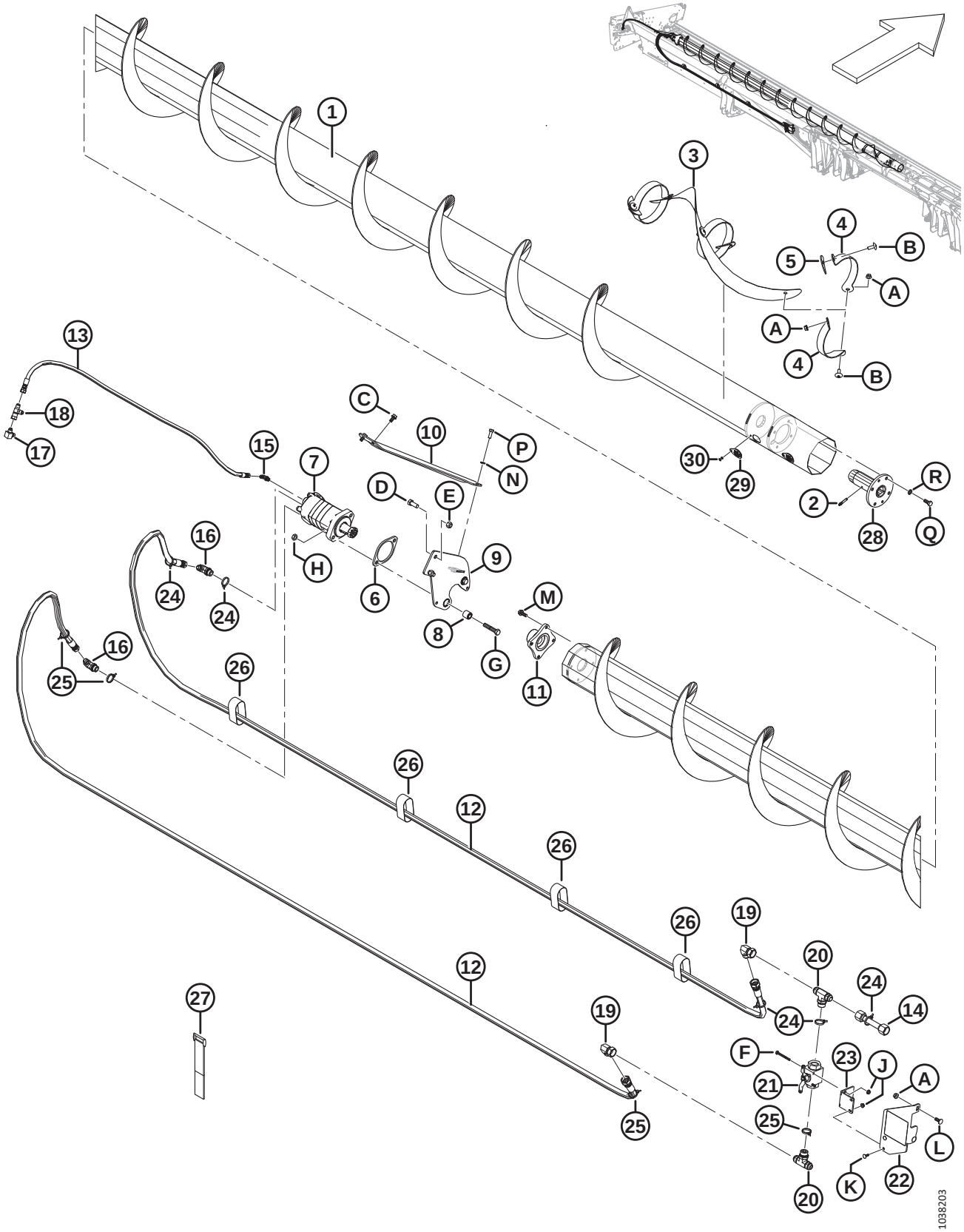

(OPTION) UPPER CROSS AUGER – LEFT END (FD145) – 2022

Ref	Part Number	Description	Qty	Serial Number
	B9049	KIT – 1 SERIES 45 FT UCA (NORTH AMERICA) [258]		
	B9050	KIT – 1 SERIES 45 FT UCA (EUROPE) [258]		
1	335600	AUGER – UCA LH WELDT 45 FT	1	
2	30934	FITTING – 1/4-28 TAPER THD	1	
3	335719	FLIGHTING – LH CENTER	1	
4	294424	SUPPORT – LH	6	
5	255883	PLATE	3	
6	253446	PLATE – SPACER	1	
7	255829	MOTOR – UCA (130 CC) [259]	1	
	283002	MOTOR – EATON 2000 (100 CC) [260]	1	
	174304	SEAL KIT		
	137375	NUT – SLOTTED JAM 1.0-20 UNEF		
8	21810	BUSHING – RUBBER	2	
9	174168	SUPPORT – LH HANGER ASSY	1	
10	279925	BRACE – LH	1	
11	279775	HUB – MACHINING	1	
12	294224	HOSE – HYDRAULIC	2	
13	294225	HOSE – HYDRAULIC	1	
14	294007	LINE – HYDRAULIC	1	
15	135647	FITTING – ELBOW 90° HYD	1	
16	21801	FITTING – ELBOW 90° HYD	2	
17	50104	FITTING – ELBOW 90° HYD	1	
18	30873	FITTING – HYD TEE	1	
19	50175	FITTING – ELBOW 90° HYD	2	
20	50050	FITTING – TEE HYD STR THD BRANCH TEE C/W O-RING	2	
21	294263	VALVE – BALL	1	
22	294814	BRACKET – BV MOUNT C/W DECAL [261]	1	
23	294009	BRACKET – HANGER, VALVE MOUNT	1	
24	252795	FASTENER – CABLE TIE, PINK	5	
25	252794	FASTENER – CABLE TIE, PURPLE	4	
26	135444	CINCH STRAP 6 IN. LG	4	
27	135443	CINCH STRAP 4 IN. LG	3	
28	233514	HUB – WELDT UCA SLIDING	1	
29	233625	COVER	2	
30	18768	RIVET – BLIND Ø0.188 IN. X 0.251 TO 0.375 GRIP RANGE	2	
A	30228	NUT – FLANGE DT SMOOTH FACE 0.375-16 UNC		
B	135507	SCREW – MACHINE,TRUSS HD TORX, 38NC X 1LG		
C	101897	SCREW – HEX WASH HD THD ROLLING 3/8 NC X 3/4		

258. Kits available through Whole Goods only.
259. For use on all SP headers and combine headers not in the European market.
260. For use in European market with increased UCA speed.
261. Bracket includes decal (MD #294813), refer to Section *37 Decals and Reflectors, page 113*.

(OPTION) UPPER CROSS AUGER – LEFT END (FD145) – 2022

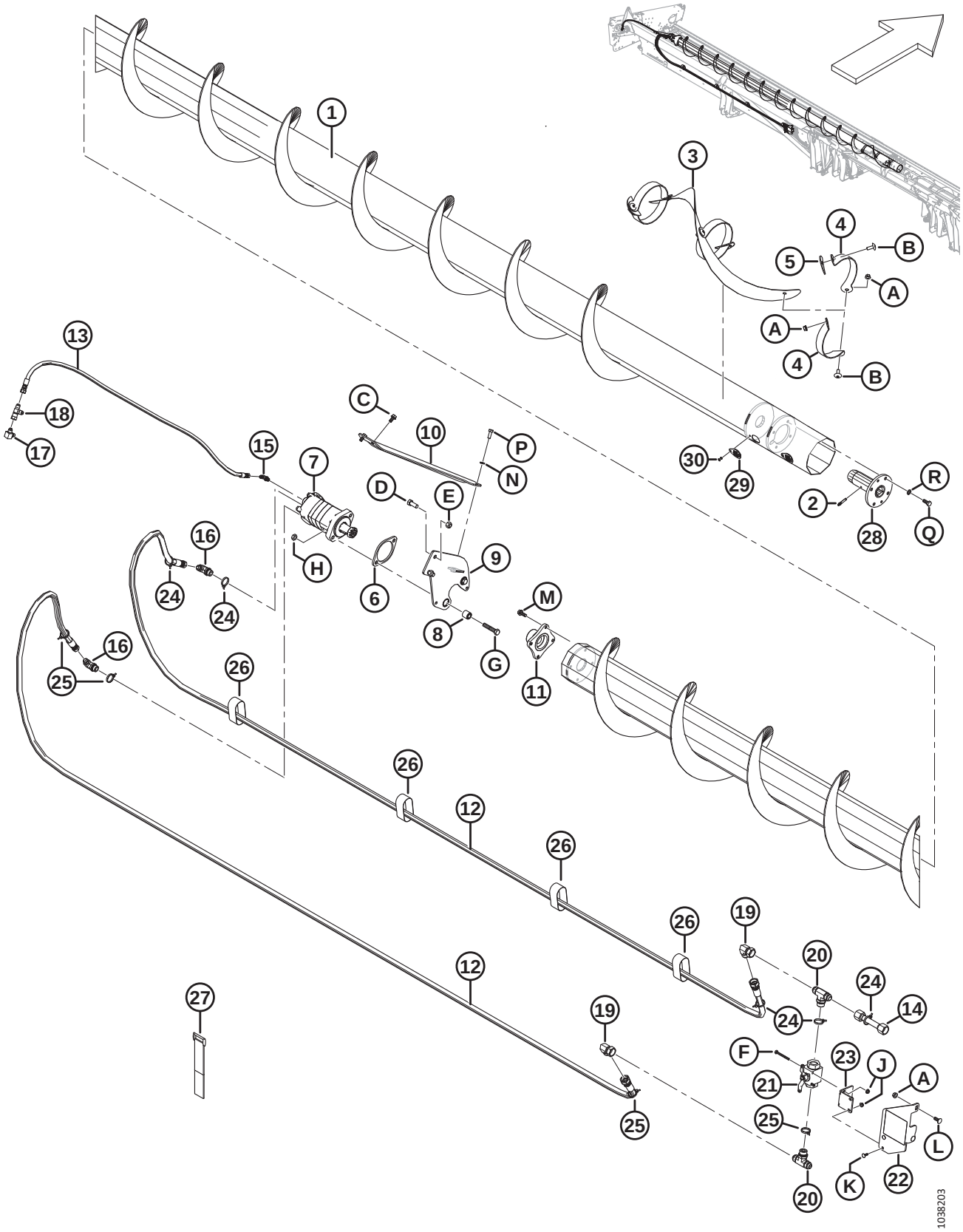

(OPTION) UPPER CROSS AUGER – LEFT END (FD145) – 2022

Ref	Part Number	Description	Qty	Serial Number
D	21491	BOLT – HH 1/2 NC X 1.25 LG GR 5 ZP		
E	18697	NUT – HEX LOCK DT .500-13 UNC		
F	21854	BOLT – HH 1/4 NC X 2.5 LG GR 5 ZP		
G	21760	BOLT – HH 1/2 NC X 2.5 LG GR 5 ZP		
H	137727	NUT – HEX JAM-DIST THD. 1/2-13 UNC GR 5 ZP		
J	135248	NUT – HEX FLG CTR LOC		
K	21476	BOLT – RHSN 1/4-20 X .75-GR5-ZP		
L	100456	BOLT – RHSSN 3/8 NC X 1.0 GR 5 ZP		
M	135193	SCREW – HEX WASH HD THD ROLLING 3/8 NC X 1.0		
N	18637	WASHER – REG. LOCK 3/8 IN. NOM. ID ZP		
P	20077	BOLT – HEX HD 3/8 NC X 1.0 LG GR 5 ZP		
Q	30627	BOLT – HEX HD TFL M10 X 1.5 X 25-8.8-A3L		
R	30632	WASHER – LOCK SPRING M10		

74 (Option) Upper Cross Auger – Right End (FD145) – 2022

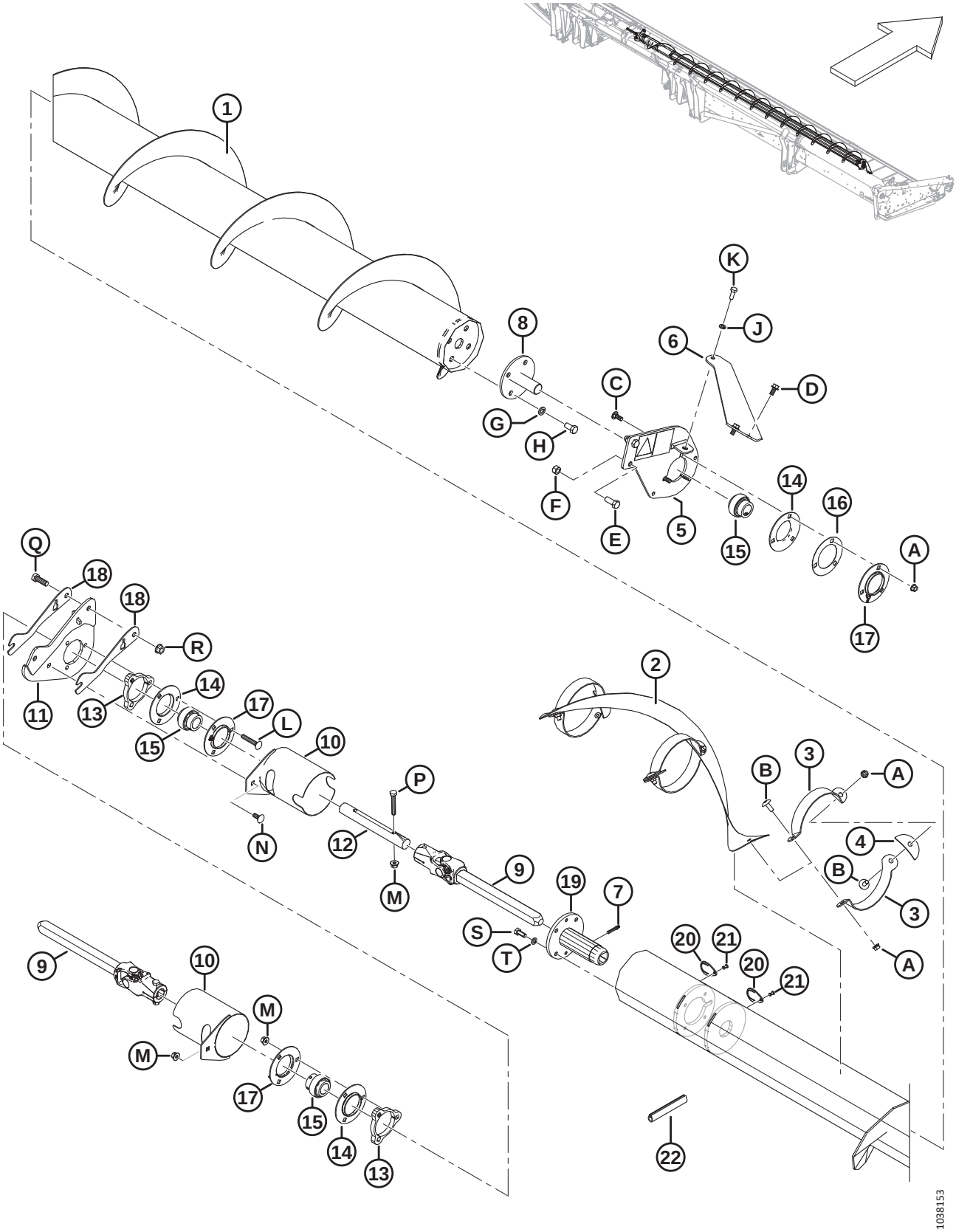

(OPTION) UPPER CROSS AUGER – RIGHT END (FD145) – 2022

Ref	Part Number	Description	Qty	Serial Number
1	335598	AUGER – UCA RH WELDT 45 FT	1	
2	335592	FLIGHTING – RH CENTER	1	
3	294425	SUPPORT – RH	6	
4	255883	PLATE	3	
5	174176	SUPPORT RH – DECAL ASSY	1	
6	279926	BRACE – RH	1	
7	30934	FITTING – 1/4-28 TAPER THD	1	
8	132303	SHAFT – END WELDT	1	
	294677	KIT – DISC, UNPAINTED [262]		
9	233513	JOINT – UNIVERSAL	2	
10	233371	GUARD – WELDT	2	
11	335615	SUPPORT – BEARING MOUNT WELDT	1	
12	233519	SHAFT	1	
13	233450	PLATE – SPACER	2	
14	49306	FLANGE	3	
15	21859	BEARING – SPH OD EXT INNER RACE 1 3/16 BORE	3	
16	172340	SHIM	1	
17	30661	FLANGE	3	
18	335625	SHIM – UCA CENTER SUPPORT	2	
19	233514	HUB – WELDT UCA SLIDING	1	
20	233625	COVER	2	
21	18768	RIVET – BLIND Ø0.188 IN. X 0.251 TO 0.375 GRIP RANGE	2	
22	45427	MOULDING – RH	1	
A	30228	NUT – FLANGE DT SMOOTH FACE 0.375-16 UNC		
B	135507	SCREW – MACHINE,TRUSS HD TORX,38NC X 1LG		
C	19965	BOLT – RHSN 3/8-16 X 1-GR5-ZP		
D	101897	SCREW – HEX WASH HD THD ROLLING 3/8 NC X 3/4		
E	21491	BOLT – HH 1/2 NC X 1.25 LG GR 5 ZP		
F	18697	NUT – HEX LOCK DT .500-13UNC		
G	18638	WASHER – REG. LOCK 1/2 IN. NOM. ID ZP		
H	21575	BOLT – HH 1/2 NC X 1.0 LG GR 5 ZP		
J	18637	WASHER – REG. LOCK 3/8 IN. NOM. ID ZP		
K	20077	BOLT – HEX HD 3/8 NC X 1.0 LG GR 5 ZP		
L	136113	BOLT – RHSN M10 X 1.5 X 60-8.8-AA1J		
M	135799	NUT – HEX FLG CTR LOC M10 X 1.5-10		
N	135785	BOLT – RHSN M10 X 1.5 X 25-8.8-AA1J		
P	108172	BOLT – HEX HD M10 X 1.5 X 65-8.8-AA1J		
Q	18723	BOLT – HEX HD 1/2-13 X 1.5 GR5-AA1J		
R	50186	NUT – FLG LK DT 1/2-13 UNC GR5 AA1J		
S	30627	BOLT – HEX HD TFL M10 X 1.5 X 25-8.8-A3L		
T	30632	WASHER – LOCK SPRING M10		

262. Repair part for shaft (MD #132303).

75 (Option) Vertical Knife – Standard Reel Arm (2018 and Prior)

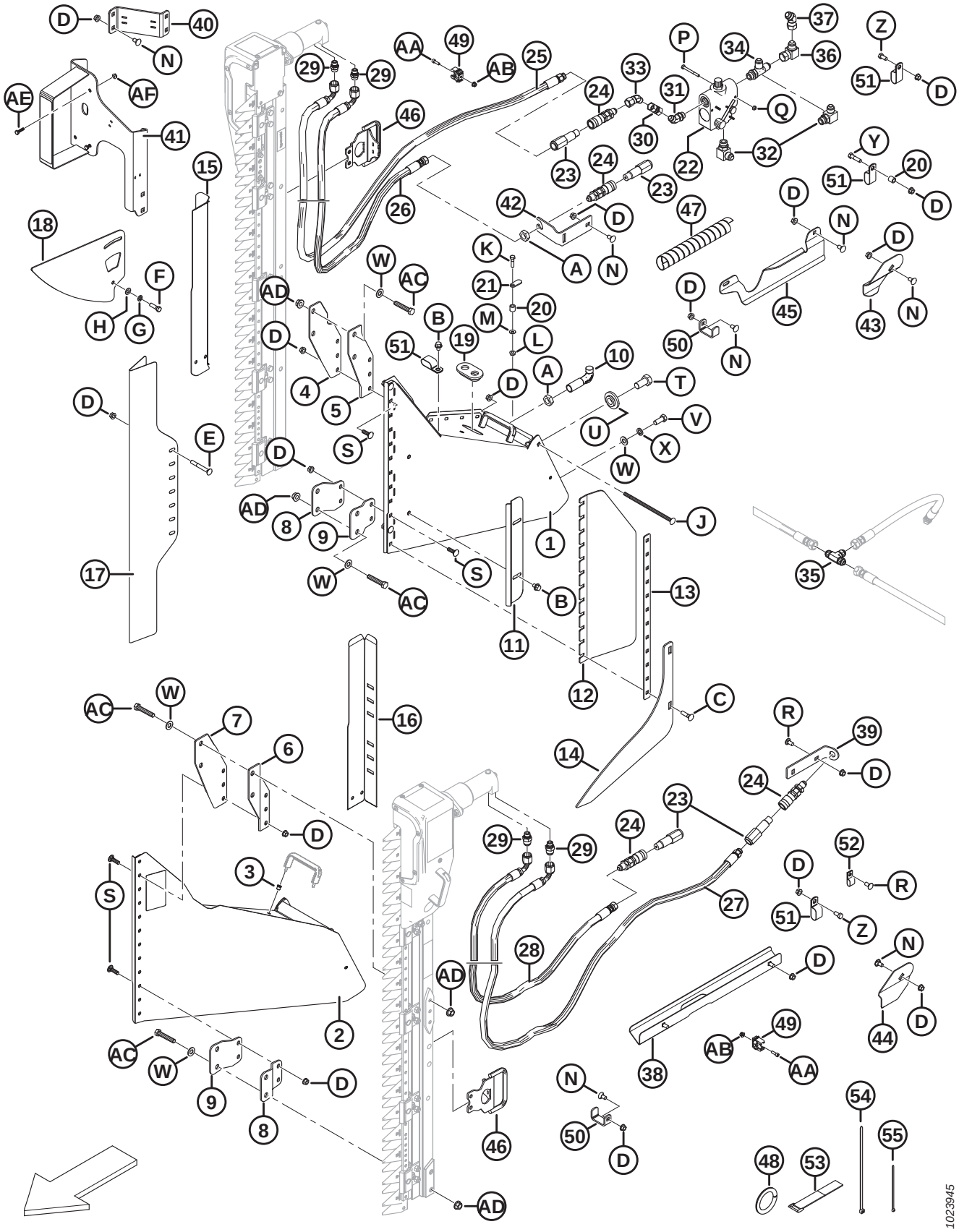

1023945

(OPTION) VERTICAL KNIFE – STANDARD REEL ARM (2018 AND PRIOR)

Ref	Part Number	Description	Qty	Serial Number
1	279494	SUPPORT ASSY – RH VERT KNIFE, C/W DECAL [263]	1	–346189
2	279485	SUPPORT ASSY – LH VERT KNIFE, C/W DECAL [263]	1	–346189
3	252578	RIVNUT – M6 X 1 RND 0.7-4.2	4	–346189
4	279156	SUPPORT – VK, TOP RH OUTBOARD	1	–346189
5	279157	SUPPORT – VK, TOP RH INBOARD	1	–346189
6	279158	SUPPORT – VK, TOP LH OUTBOARD	1	–346189
7	279159	SUPPORT – VK, TOP LH INBOARD	1	–346189
8	279498	SUPPORT – VK, BOTTOM, OUTBOARD	2	–346189
9	279499	SUPPORT – VK, BOTTOM, INBOARD	2	–346189
10	132773	HOOK – DIVIDER LATCH	2	–346189
11	174242	DEFLECTOR – VERTICAL KNIFE	2	–346189
12	174321	DEFLECTOR – PLASTIC VERTICAL KNIFE	2	–346189
13	174240	RETAINER – DEFLECTOR VERTICAL KNIFE	2	–346189
14	220197	LIFTER – VERTICAL KNIFE	2	–346189
15	174318	SHIELD – HOSES RH VERTICAL KNIFE	1	–346189
16	174322	SHIELD – HOSES LH VERTICAL KNIFE	1	–346189
17	165380	SHIELD – VERTICAL KNIFE	2	–346189
18	174238	GUIDE – TOP VERTICAL KNIFE	2	–346189
19	165103	GROMMET	2	–346189
20	174324	SPACER	3	–346189
21	174243	LEVER – SAFETY	2	–346189
22	174422	VALVE [264]	1	–346189
	30054	SEAL KIT		–346189
23	135386	COUPLER – MALE HYD. 3/8 IN. FLAT FACE (FASTER) [265]	4	–346189
	111978	SEAL KIT – 3/8 MALE (FASTER ONLY)		–346189
24	135213	COUPLING – FEMALE HYD. 3/8 IN. FLAT FACE BULKHEAD	4	–346189
25	174262	HOSE – RH VERT. KNIFE PRESSURE, 3425 MM LG	1	–346189
26	174547	HOSE – RH VERTICAL KNIFE RETURN, 3350 MM LG	1	–346189
27	174263	HOSE – LH VERT. KNIFE PRESSURE, 3125 MM LG	1	–346189
28	174585	HOSE – LH VERTICAL KNIFE RETURN, 2750 MM LG	1	–346189
29	252296	FITTING – ADAPTER 10 JIC X 6 BSPP (ZIEGLER ONLY)	4	–346189
	136654	SEAL KIT (ZIEGLER ONLY)		–346189
	21746	FITTING – CONNECTOR HYD (SABRE ONLY)	4	–346189
30	135540	FITTING – FEMALE UNION HYD	1	–346189
31	135241	FITTING – ELBOW 45° HYD C/W O-RING	1	–346189
32	21843	FITTING – ELBOW 90° HYD	2	–346189
33	135685	FITTING – ELBOW 45° HYD	1	–346189
34	50019	FITTING – TEE HYD STR THD RUN TEE C/W O-RING	1	–346189
35	30551	FITTING – TEE HYD	1	–346189

263. Includes decal (MD #174684) and two rivnuts (MD #252578).
264. Includes seal kit (MD #30054).
265. Faster coupler (MD #135386) is interchangeable with Parker Hannifin couple (NSS). Seal kit (MD #111978) is only intended for Faster coupler and cannot be used with Parker Hannifin coupler. Length can be used to differentiate the two couplers; Faster coupler = 101 mm and Parker Hannifin coupler = 84 mm.

(OPTION) VERTICAL KNIFE – STANDARD REEL ARM (2018 AND PRIOR)

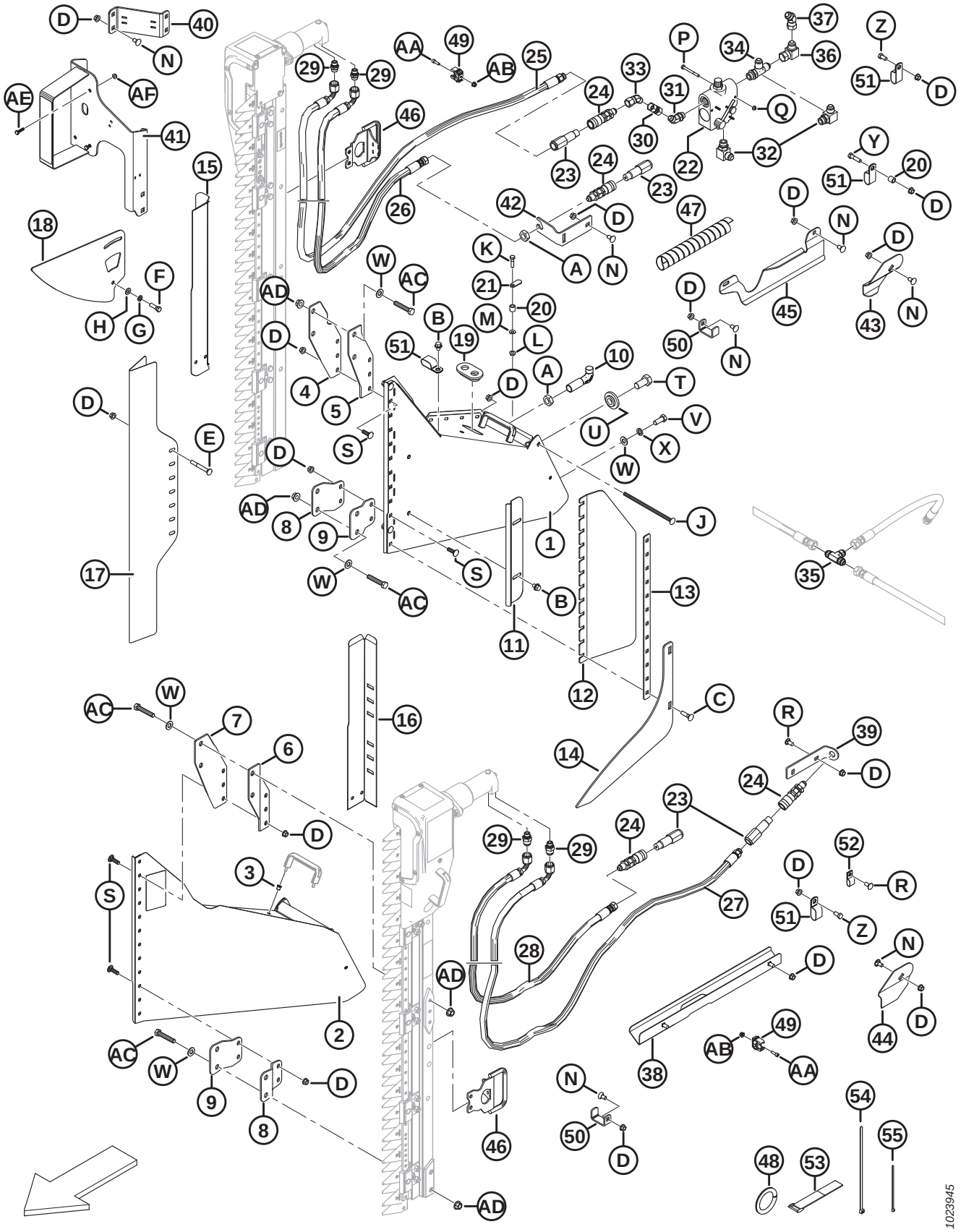

(OPTION) VERTICAL KNIFE – STANDARD REEL ARM (2018 AND PRIOR)

Ref	Part Number	Description	Qty	Serial Number
36	30556	FITTING – ELBOW 90° HYD	1	–346189
37	135434	FITTING – ELBOW 45° SWIVEL SAE	1	–346189
38	174586	SUPPORT WELDMENT – LH VERTICAL KNIFE	1	–346189
39	174538	SUPPORT – HOSE LH VERTICAL KNIFE	1	–346189
40	174883	SUPPORT – LAMP, VERTICAL KNIFE KIT	1	–346189
41	294393	SUPPORT – RH REAR LIGHT VERT KNIFE	1	–346189
42	174521	SUPPORT – COUPLER	1	–346189
43	174514	HOLDER – RH HOSE VERTICAL KNIFE	1	–346189
44	174513	HOLDER – LH HOSE VERTICAL KNIFE	1	–346189
45	125229	GUIDE – RH HOSES, VERT KNIFE	1	–346189
46	279144	HANDLE – VERT KNIFE (ZIEGLER ONLY)	2	–346189
47	252537	GUARD – HOSE, SPIRAL	1	–346189
48	45427	MOULDING – RH (SPEC 31886)	1	–346189
49	252314	CLIP – PIPE, 20 MM	8	–346189
50	132418	CLAMP – HOSE VERTICAL KNIFE	3	–346189
51	103738	CLAMP – PVC INSULATED 13/16 IN. TUBE SIZE	13	–346189
52	135233	CLAMP – DOUBLE HOSE INSULATED	1	–346189
53	135443	FASTENER – CINCH STRAP 4 IN. LG	3	–346189
54	30753	FASTENER – CABLE TIE BLACK, 305 MM LG	6	–346189
55	21763	FASTENER – CABLE TIE BLACK, 160 MM LG	10	–346189
A	7674	NUT – HEX JAM 3/4 16 UNF GR 5 ZP		
B	30693	BOLT – FLANGE (SER FACE) .375-16 UNC X 0.5 LG		
C	21484	BOLT – RHSN 3/8 NC X 1.5 LG GR 5 ZP		
D	30228	NUT – FLANGE DT SMOOTH FACE 0.375-16 UNC		
E	30307	BOLT – RHSN 3/8 NC X 3.0 LG GR 5 ZP		
F	21264	BOLT – HH 3/8 NC X 1.25 LG GR 5 ZP		
G	18637	WASHER – REG. LOCK 3/8 IN. NOM. ID ZP		
H	18598	WASHER – SAE FLAT 13/32 ID X 13/16 IN OD ZP		
J	135665	BOLT – RHSN 3/8 NC X 8 LG GR 5 ZP		
K	21526	BOLT – HH 5/16 NC X 1.25 LG GR 5 ZP		
L	30280	NUT – FLG SIDE LK SMTH FACE 5/16 NC GR 5 ZP		
M	184579	WASHER – CONICAL SPRING M8A		
N	21472	BOLT – RHSN 3/8 NC X 0.75 GR 5 ZP		
P	21854	BOLT – HH 1/4 NC X 2.5 LG GR 5 ZP		
Q	18724	NUT – HEX LOCK DT 1/4-20 UNC ZP		
R	21863	BOLT – RHSSN 3/8 NC X 0.75 LG GR 5 ZP		
S	19966	BOLT – RHSN 3/8 NC X 1.25 LG GR 5 ZP		
T	135579	BOLT – HEX HD 3/4-16 UNF		
U	220324	WASHER – VERTICAL KNIFE		
V	21491	BOLT – HH 1/2 NC X 1.25 LG GR 5 ZP		
W	18599	WASHER – SAE FLAT 17/32 ID X 1 1/16 IN OD ZP		
X	18638	WASHER – REG. LOCK 1/2 IN. NOM. ID ZP		

(OPTION) VERTICAL KNIFE – STANDARD REEL ARM (2018 AND PRIOR)

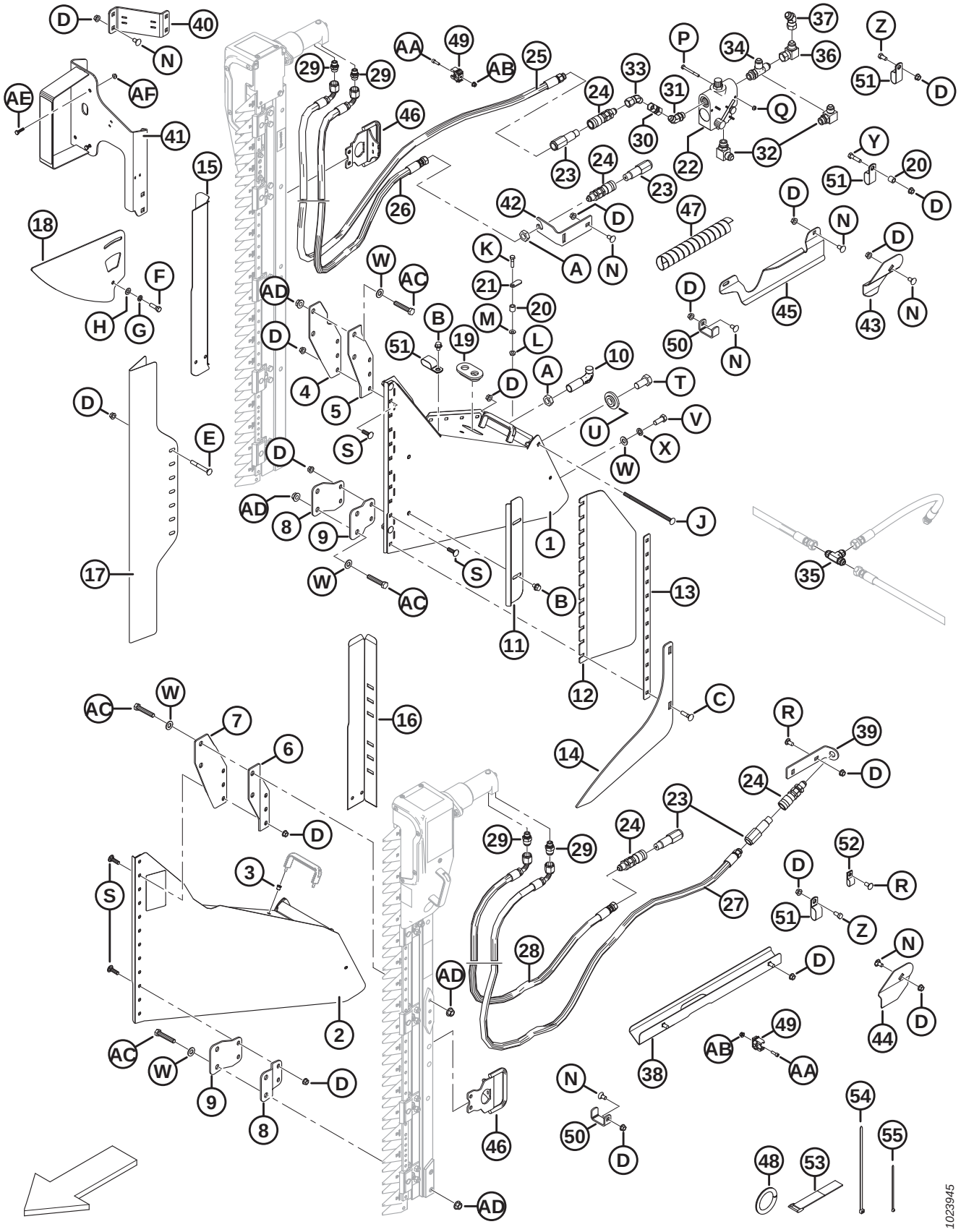

(OPTION) VERTICAL KNIFE – STANDARD REEL ARM (2018 AND PRIOR)

Ref	Part Number	Description	Qty	Serial Number
Y	21561	BOLT – HH 3/8 NC X 1.5 LG GR 5 ZP		
Z	21567	BOLT – HEX HD .375-16 UNC X 0.75 LG		
AA	136652	SCREW – HEX SOC HD M6 X 1 X 20-12.9-A2L		
AB	152668	NUT – HEX FLG CTR LOC M6 X 1-8-A2L		
AC	252541	BOLT – HEX HD M12 X 1.75 X 65-8.8-A3L		
AD	148645	NUT – HEX FLG STVR LOC M12 X 1.75-10-A3L		
AE	21573	BOLT – HEX HD 1/4 NC X 1.0 LG GR 5 ZP		
AF	21455	NUT – FLG (SER FACE) 1/4 NC GR 5 ZP		

76 (Option) Vertical Knife – Standard Reel Arm, Left End (2019–2021)

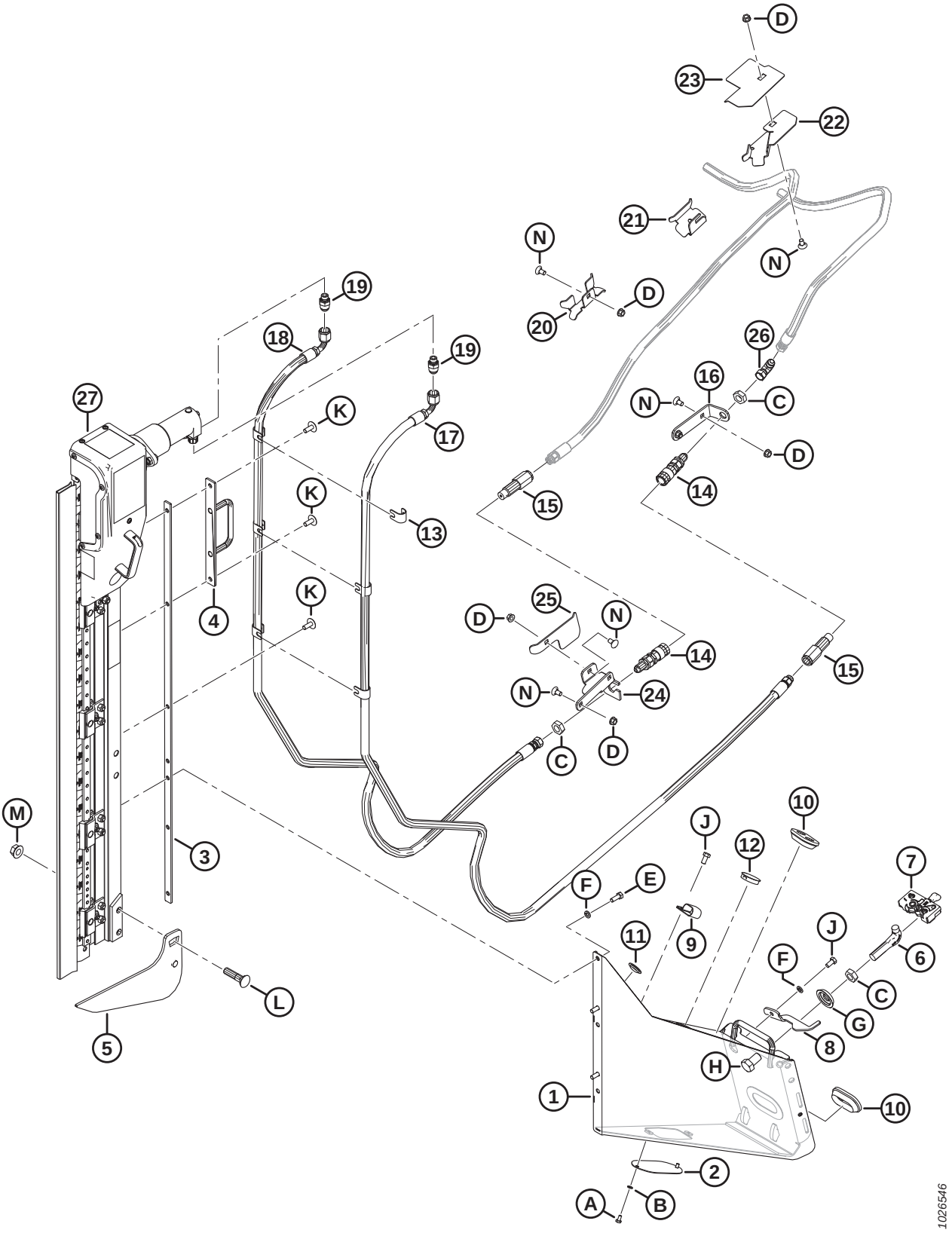

(OPTION) VERTICAL KNIFE – STANDARD REEL ARM, LEFT END (2019–2021)

Ref	Part Number	Description	Qty	Serial Number
	B6410	KIT – ZIEGLER LH/RH VERTICAL KNIFES FOR D1/FD1 [266]		346190–
1	**REF**	SUPPORT ASSEMBLY – LH NA [267]	1	346190–421189
	335869	**KIT – VERTICAL KNIFE MOUNTS** [268]		
2	253582	PLATE	1	346190–421189
3	253668	SUPPORT WELDMENT	1	346190–421189
4	253570	SUPPORT WELDMENT	1	346190–421189
5	253708	LIFTER LEFT WELDMENT	1	346190–421189
6	132773	HOOK – DIVIDER LATCH	1	346190–421189
7	120932	LATCH – LH	1	346190–421189
8	132248	LATCH – LH, DIVIDER SAFETY	1	346190–421189
9	103738	CLAMP – PVC INSULATED 13/16 IN. TUBE SIZE	1	346190–421189
10	165103	GROMMET	2	346190–421189
11	30433	PLUG – PLASTIC SNAP-IN	2	346190–421189
12	135613	PLUG – PLASTIC SNAP-IN	1	346190–421189
13	279798	SUPPORT	6	346190–421189
14	135213	COUPLING – FEMALE HYD. 3/8 FLAT FACE BULKHEAD	2	346190–421189
15	135386	COUPLER – MALE HYD. 3/8 IN. FLAT FACE (FASTER) [269]	2	346190–421189
	111978	SEAL KIT – 3/8 MALE (FASTER ONLY)		346190–421189
16	245915	SUPPORT – HOSE COUPLER	1	346190–421189
17	294985	HOSE – HYD	1	346190–421189
18	294508	HOSE – HYD	1	346190–421189
19	252296	FITTING – ADAPTER-10 JIC X-6 BSPP	2	346190–421189
20	245931	SUPPORT – HOSE	1	346190–421189
21	245956	SUPPORT – HOSE	1	346190–421189
22	253702	SUPPORT – HOSE, LH	1	346190–421189
23	253704	GUIDE – HOSE, LH	1	346190–421189
24	245928	SUPPORT – LH COUPLER	1	346190–421189
25	245936	DEFLECTOR – LH HOSE	1	346190–421189
26	30314	FITTING – ELBOW 90° HYD	1	346190–421189
27	NSS	ZIEGLER VERTICAL KNIFE [270]		346190–421189
A	21580	BOLT – HEX HD 1/4 NC X 0.5 LG GR 5 ZP		
B	18635	WASHER – REG. LOCK 1/4 IN. NOM. ID ZP		
C	7674	NUT – HEX JAM 3/4-16 UNF GR 5 ZP		

266. Kit includes two knives. Kits available through Whole Goods only.
267. If replacing the LH support assembly, order the Vertical Knife Mounts kit (MD #335869). The vertical knife mounts have a new design, and the kit includes both LH and RH mounts, hoses, and hardware required to convert to the new configuration.
268. Includes both LH and RH mounts, hoses, and hardware required to convert to the new configuration.
269. Faster coupler (MD #135386) is interchangeable with Parker Hannifin coupler (NSS). Seal kit (MD #111978) is only intended for Faster coupler and cannot be used with Parker Hannifin coupler. Length can be used to differentiate the two couplers; Faster coupler = 101 mm and Parker Hannifin coupler = 84 mm.
270. Not sold separately, can be ordered as a set of two knives (MD #B6410). For service parts, refer to Section *83 (Option) Vertical Knife Assembly – Service Parts, page 245*.

(OPTION) VERTICAL KNIFE – STANDARD REEL ARM, LEFT END (2019–2021)

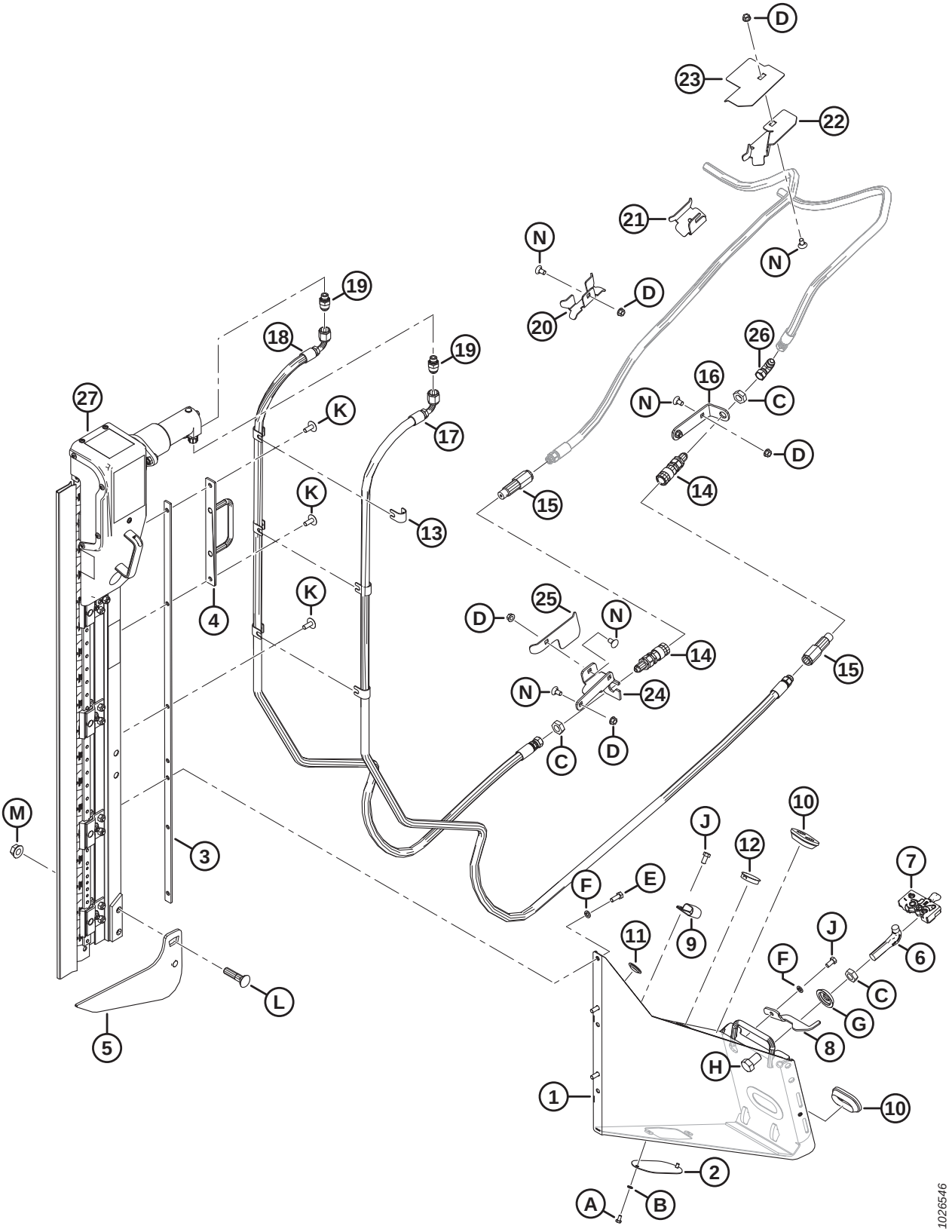

(OPTION) VERTICAL KNIFE – STANDARD REEL ARM, LEFT END (2019–2021)

Ref	Part Number	Description	Qty	Serial Number
D	30228	NUT – FLANGE DT SMOOTH FACE 0.375-16 UNC		
E	20077	BOLT – HEX HD 3/8 NC X 1.0 LG GR 5 ZP		
F	18637	WASHER – REG. LOCK 3/8 IN. NOM. ID ZP		
G	253477	WASHER – VERTICAL KNIFE		
H	21590	BOLT – HH 3/4 NC X 1.25 LG GR 5 ZP		
J	21567	BOLT – HEX HD .375-16 UNC X 0.75 LG		
K	135507	SCREW – MACHINE TRUSS HD TORX, 38 NC X 1 LG		
L	30759	BOLT – RHSSN 5/8 NC X 2.5 LG GR 5 ZP		
M	50225	NUT – FLANGE DT SMOOTH FACE .625-11 UNC		
N	21472	BOLT – RHSN 3/8-16 X .75-GR5		

77 (Option) Vertical Knife – Standard Reel Arm, Right End (2019–2021)

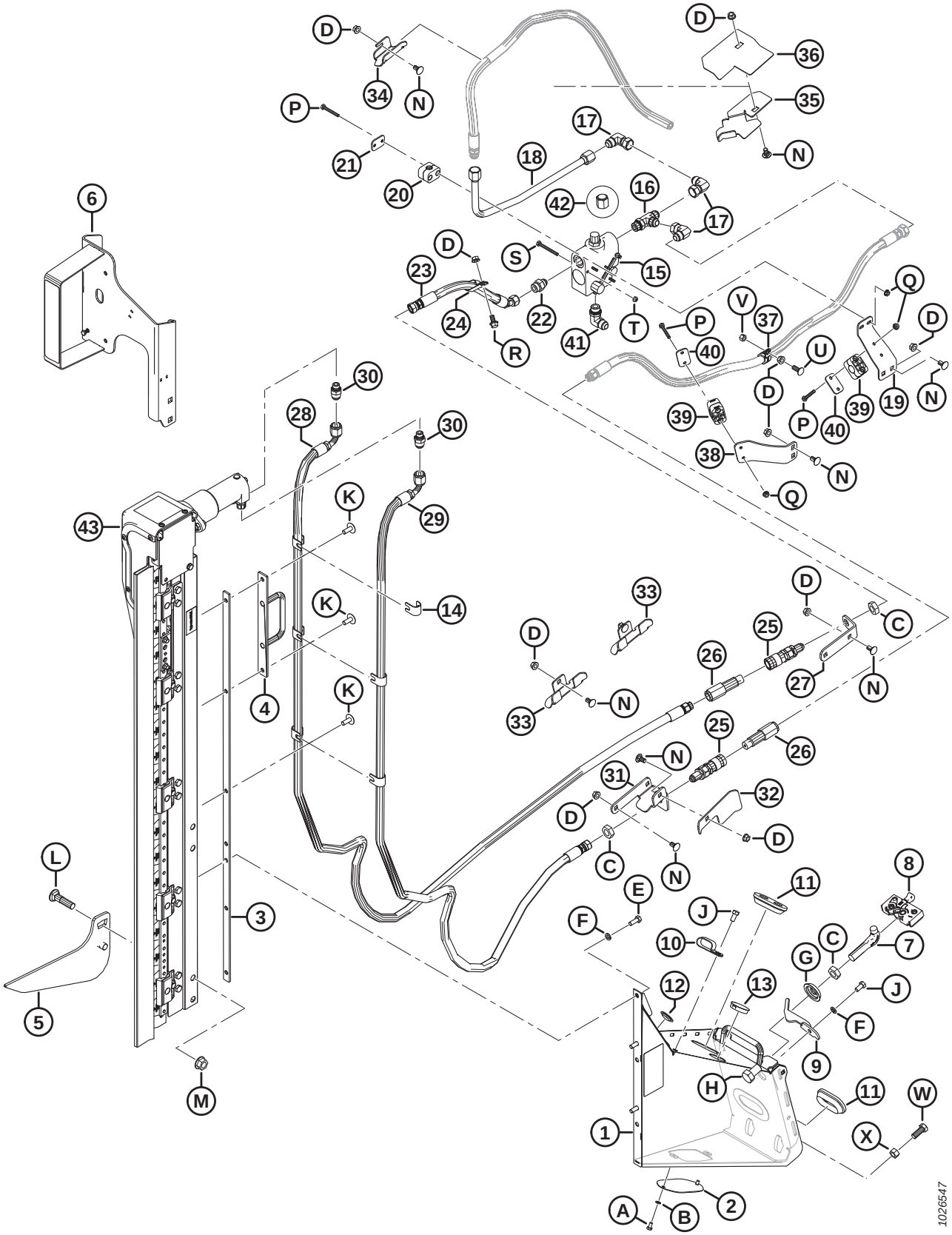

(OPTION) VERTICAL KNIFE – STANDARD REEL ARM, RIGHT END (2019–2021)

Ref	Part Number	Description	Qty	Serial Number
	B6410	KIT – ZIEGLER LH/RH VERTICAL KNIFES FOR D1/FD1 [271]		346190–
1	**REF**	SUPPORT ASSEMBLY – RH NA [272]	1	346190–421189
	335869	**KIT – VERTICAL KNIFE MOUNTS** [273]		
2	253582	PLATE	1	346190–421189
3	253668	SUPPORT WELDMENT	1	346190–421189
4	253570	SUPPORT WELDMENT	1	346190–421189
5	253709	LIFTER RIGHT WELDMENT	1	346190–421189
6	294393	SUPPORT – RH LIGHT VERT KNIFE	1	346190–421189
	115146	REFLECTOR – AMBER		346190–421189
	115147	REFLECTOR – RED		346190–421189
7	132773	HOOK – DIVIDER LATCH	1	346190–421189
8	120933	LATCH – RH	1	346190–421189
9	132253	LATCH – RH, DIVIDER SAFETY	1	346190–421189
10	103738	CLAMP – PVC INSULATED 13/16 IN. TUBE SIZE	7	346190–421189
11	165103	GROMMET	2	346190–421189
12	30433	PLUG – PLASTIC SNAP-IN	2	346190–421189
13	135613	PLUG – PLASTIC SNAP-IN	1	346190–421189
14	279798	SUPPORT	6	346190–421189
15	174422	VALVE	1	346190–421189
	30054	SEAL KIT		346190–421189
16	50019	FITTING – TEE HYD STR THD RUN TEE CW O-RING	1	346190–421189
17	30556	FITTING – ELBOW 90° HYD	3	346190–421189
18	255471	LINE – HYDRAULIC	1	346190–421189
19	279001	SUPPORT – HOSE CLAMP	1	346190–421189
20	252399	CLAMP – ASSY	1	346190–421189
21	255461	PLATE – COVER	1	346190–421189
22	21881	FITTING – ADAPTER HYD	1	346190–421189
23	255462	HOSE – HYD	1	346190–421189
24	135235	CLAMP – DOUBLE HOSE INSULATED	1	346190–421189
25	135213	COUPLING – FEMALE HYD. 3/8 FLAT FACE BULKHEAD	2	346190–421189
26	135386	COUPLER – MALE HYD. 3/8 IN. FLAT FACE (FASTER) [274]	2	346190–421189
	111978	SEAL KIT – 3/8 MALE (FASTER ONLY)		346190–421189
27	245915	SUPPORT – HOSE COUPLER	1	346190–421189
28	294985	HOSE – HYD	1	346190–421189
29	294508	HOSE – HYD	1	346190–421189
30	252296	FITTING – ADAPTER-10 JIC X-6 BSPP	2	346190–421189
31	245955	SUPPORT – RH COUPLER	1	346190–421189

271. Kit includes two knives. Kits available through Whole Goods only.
272. If replacing the RH support assembly, order the Vertical Knife Mounts kit (MD #335869). The vertical knife mounts have a new design, and the kit includes both LH and RH mounts, hoses, and hardware required to convert to the new configuration.
273. Includes both LH and RH mounts, hoses, and hardware required to convert to the new configuration.
274. Faster coupler (MD #135386) is interchangeable with Parker Hannifin coupler (NSS). Seal kit (MD #111978) is only intended for Faster coupler and cannot be used with Parker Hannifin coupler. Length can be used to differentiate the two couplers; Faster coupler = 101 mm and Parker Hannifin coupler = 84 mm.

(OPTION) VERTICAL KNIFE – STANDARD REEL ARM, RIGHT END (2019–2021)

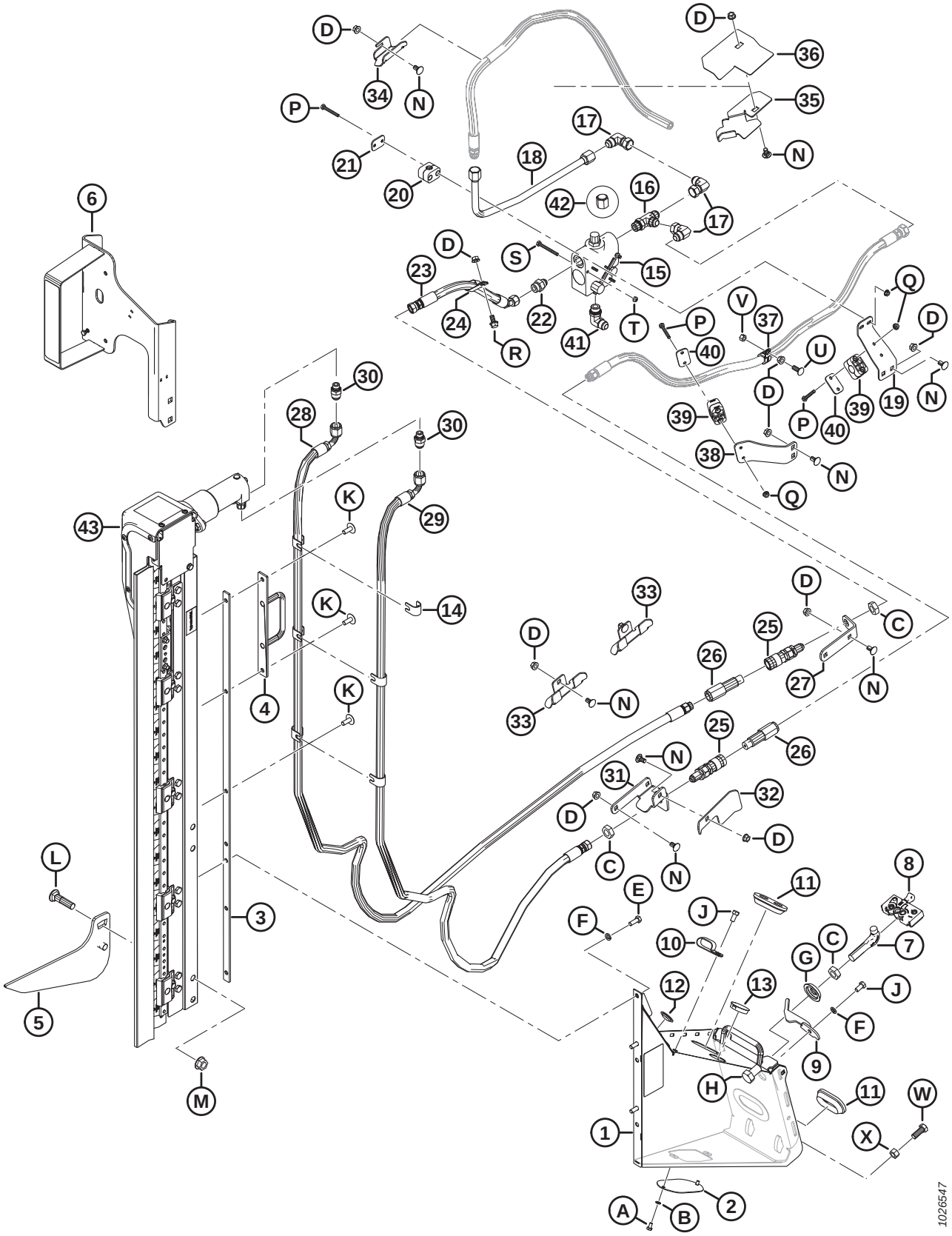

(OPTION) VERTICAL KNIFE – STANDARD REEL ARM, RIGHT END (2019–2021)

Ref	Part Number	Description	Qty	Serial Number
32	279017	DEFLECTOR – RH HOSE	1	346190–421189
33	245931	SUPPORT – HOSE	2	346190–421189
34	245956	SUPPORT – HOSE	1	346190–421189
35	253703	SUPPORT – HOSE, RH	1	346190–421189
36	253705	GUIDE – HOSE, RH	1	346190–421189
37	135709	CLAMP – INSULATED 3/4 IN	1	346190–421189
38	245946	SUPPORT – HOSE CLAMP	1	346190–421189
39	252368	CLAMP – ASSY	2	346190–421189
40	255460	PLATE – COVER	2	346190–421189
41	21843	FITTING – ELBOW 90° HYD	1	346190–421189
42	112935	CAP – 5/8 IN. TUBE 37° FLARE	1	346190–421189
43	NSS	ZIEGLER VERTICAL KNIFE [275]		346190–421189
	294995	HOSE – HYD, 12.5 IN. I.D., 520 MM LG, 100R17 METAL REIN. (NOT ILLUSTRATED) [276]	1	346190–421189
	50102	FITTING – HYD TEE (NOT ILLUSTRATED) [276]	1	346190–421189
A	21580	BOLT – HEX HD 1/4 NC X 0.5 LG GR 5 ZP		
B	18635	WASHER – REG. LOCK 1/4 IN. NOM. ID ZP		
C	7674	NUT – HEX JAM 3/4-16 UNF GR 5 ZP		
D	30228	NUT – FLANGE DT SMOOTH FACE 0.375-16 UNC		
E	20077	BOLT – HEX HD 3/8 NC X 1.0 LG GR 5 ZP		
F	18637	WASHER – REG. LOCK 3/8 IN. NOM. ID ZP		
G	253477	WASHER – VERTICAL KNIFE		
H	21590	BOLT – HH 3/4 NC X 1.25 LG GR 5 ZP		
J	21567	BOLT – HEX HD .375-16 UNC X 0.75 LG		
K	135507	SCREW – MACHINE TRUSS HD TORX, 38 NC X 1 LG		
L	30759	BOLT – RHSSN 5/8 NC X 2.5 LG GR 5 ZP		
M	50225	NUT – FLANGE DT SMOOTH FACE .625-11 UNC		
N	21472	BOLT – RHSN 3/8-16 X .75-GR5		
P	21570	BOLT – HH 1/4 NC X 2.0 LG GR 5 ZP		
Q	135248	NUT – FLG SMTH FACE 1/4-20 NC GR 5 ZP CTR LK DT THD		
R	21821	BOLT – HH FLG (SERR FACE) 3/8 NC X 0.75 GR 5 ZP		
S	21854	BOLT – HH 1/4 NC X 2.5 LG GR 5 ZP		
T	18724	NUT – HEX LOCK DT 1/4-20 UNC ZP		
U	100456	BOLT – RHSSN 3/8 NC X 1.0 GR 5 ZP		
V	135511	NUT – CENTER LOCK .375-16 UNC GR 5 ZP		
W	21491	BOLT – HH 1/2 NC X 1.25 LG GR 5 ZP		
X	18591	NUT – HEX 1/2-13 UNC GR 5 ZP		

275. Not sold separately, can be ordered as a set of two knives (MD #B6410). For service parts, refer to Section *83 (Option) Vertical Knife Assembly – Service Parts, page 245*.
276. For D1XL only. Part is required to make vertical knife bundles (MD #B6608 and B6609) compatible with D1XL Headers.

78 (Option) Vertical Knife – Standard Reel Arm, Left End (2022)

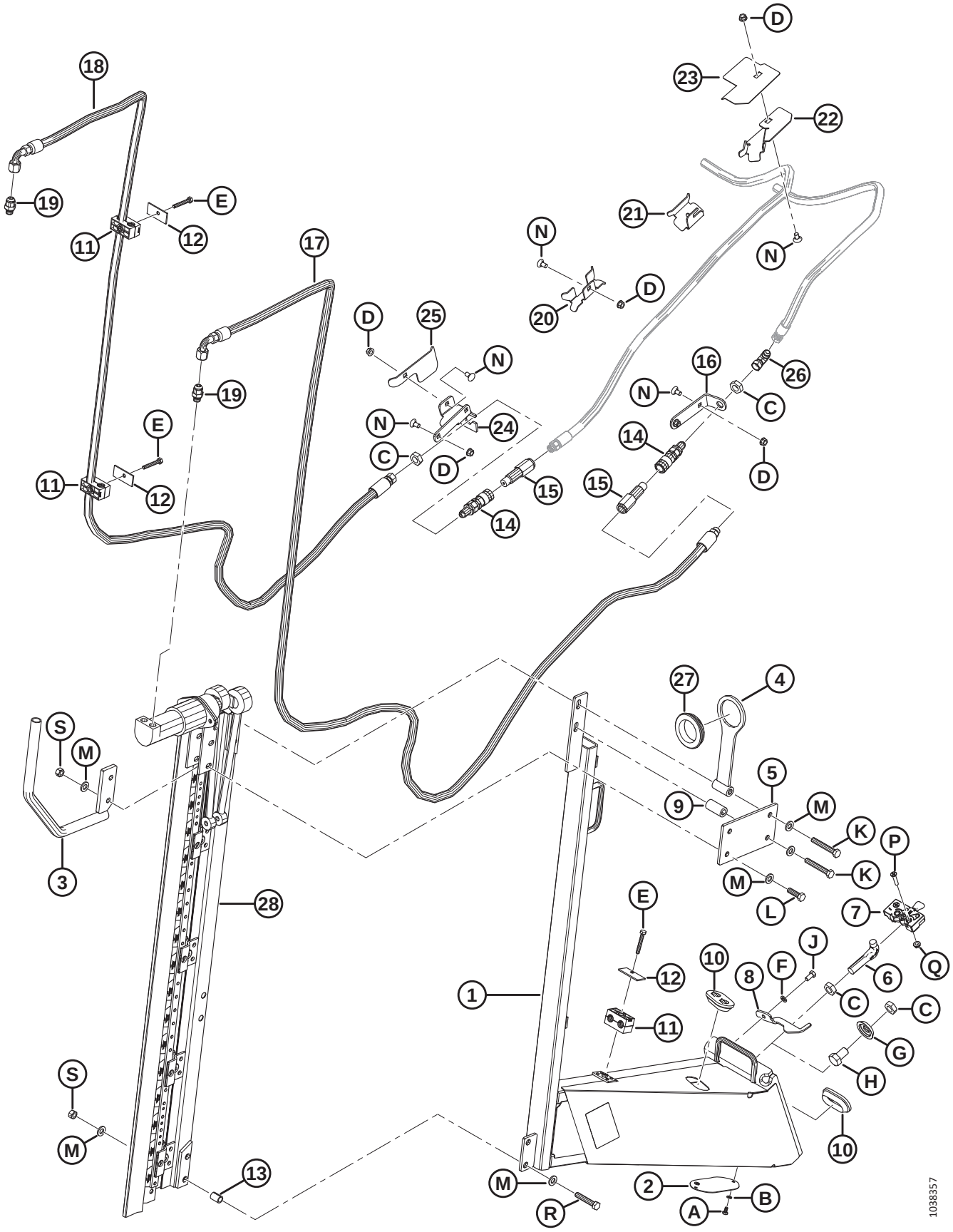

(OPTION) VERTICAL KNIFE – STANDARD REEL ARM, LEFT END (2022)

Ref	Part Number	Description	Qty	Serial Number
	B9048	KIT – VERTICAL KNIFE LH, LONG MOUNT [277]		421190–
	B6410	KIT – ZIEGLER LH/RH VERTICAL KNIFES FOR D1/FD1 [278]		421190–
1	335864	SUPPORT ASSEMBLY – LH LONG [279]	1	421190–
2	253582	PLATE	1	421190–
3	335785	DIVIDER – TUBE WELDMENT	1	421190–
4	335784	SUPPORT – HOSE BRACKET	1	421190–
5	335779	SUPPORT – MOTOR BRACKET	1	421190–
6	132773	HOOK – DIVIDER LATCH	1	421190–
7	120932	LATCH – LH	1	421190–
8	132248	LATCH – LH, DIVIDER SAFETY	1	421190–
9	335810	TUBE – SPACER	1	421190–
10	165103	GROMMET	2	421190–
11	202991	CLAMP – TUBING	3	421190–
12	232233	CLAMP – COVER PLATE	3	421190–
13	335867	SPACER – SPLIT	2	421190–
14	135213	COUPLING – FEMALE HYD. 3/8 FLAT FACE BULKHEAD	2	421190–
15	135386	COUPLER – MALE HYD. 3/8 IN. FLAT FACE (FASTER) [280]	2	421190–
	111978	SEAL KIT – 3/8 MALE (FASTER ONLY)		421190–
16	245915	SUPPORT – HOSE COUPLER	1	421190–
17	335760	HOSE – HYDRAULIC, 0.5 IN ID, 3740 MM LG, 100 R17	1	421190–
18	335759	HOSE – HYDRAULIC, 0.5 IN ID, 3020 MM LG, 100 R17	1	421190–
19	252296	FITTING – ADAPTER-10 JIC X-6 BSPP	2	421190–
20	245931	SUPPORT – HOSE	1	421190–
21	245956	SUPPORT – HOSE	1	421190–
22	253702	SUPPORT – HOSE, LH	1	421190–
23	253704	GUIDE – HOSE, LH	1	421190–
24	245928	SUPPORT – LH COUPLER	1	421190–
25	245936	DEFLECTOR – LH HOSE	1	421190–
26	30314	FITTING – ELBOW 90° HYD	1	421190–
27	172877	GROMMET – 2.38" I.D.	1	421190–
28	NSS	ZIEGLER VERTICAL KNIFE [281]		421190–
A	21580	BOLT – HEX HD 1/4 NC X 0.5 LG GR 5 ZP		
B	18635	WASHER – REG. LOCK 1/4 IN. NOM. ID ZP		
C	7674	NUT – HEX JAM 3/4-16 UNF GR 5 ZP		

277. Kits available through Whole Goods only.
278. Kit includes two knives. Kits available through Whole Goods only.
279. Includes LH support (NSS), plate (MD #253582), two bolts (MD #21580), two washers (MD #18635), and decal (MD #174684).
280. Faster coupler (MD #135386) is interchangeable with Parker Hannifin coupler (NSS). Seal kit (MD #111978) is only intended for Faster coupler and cannot be used with Parker Hannifin coupler. Length can be used to differentiate the two couplers; Faster coupler = 101 mm and Parker Hannifin coupler = 84 mm.
281. Not sold separately, can be ordered as a set of two knives (MD #B6410). For service parts, refer to Section *83 (Option) Vertical Knife Assembly – Service Parts, page 245*.

(OPTION) VERTICAL KNIFE – STANDARD REEL ARM, LEFT END (2022)

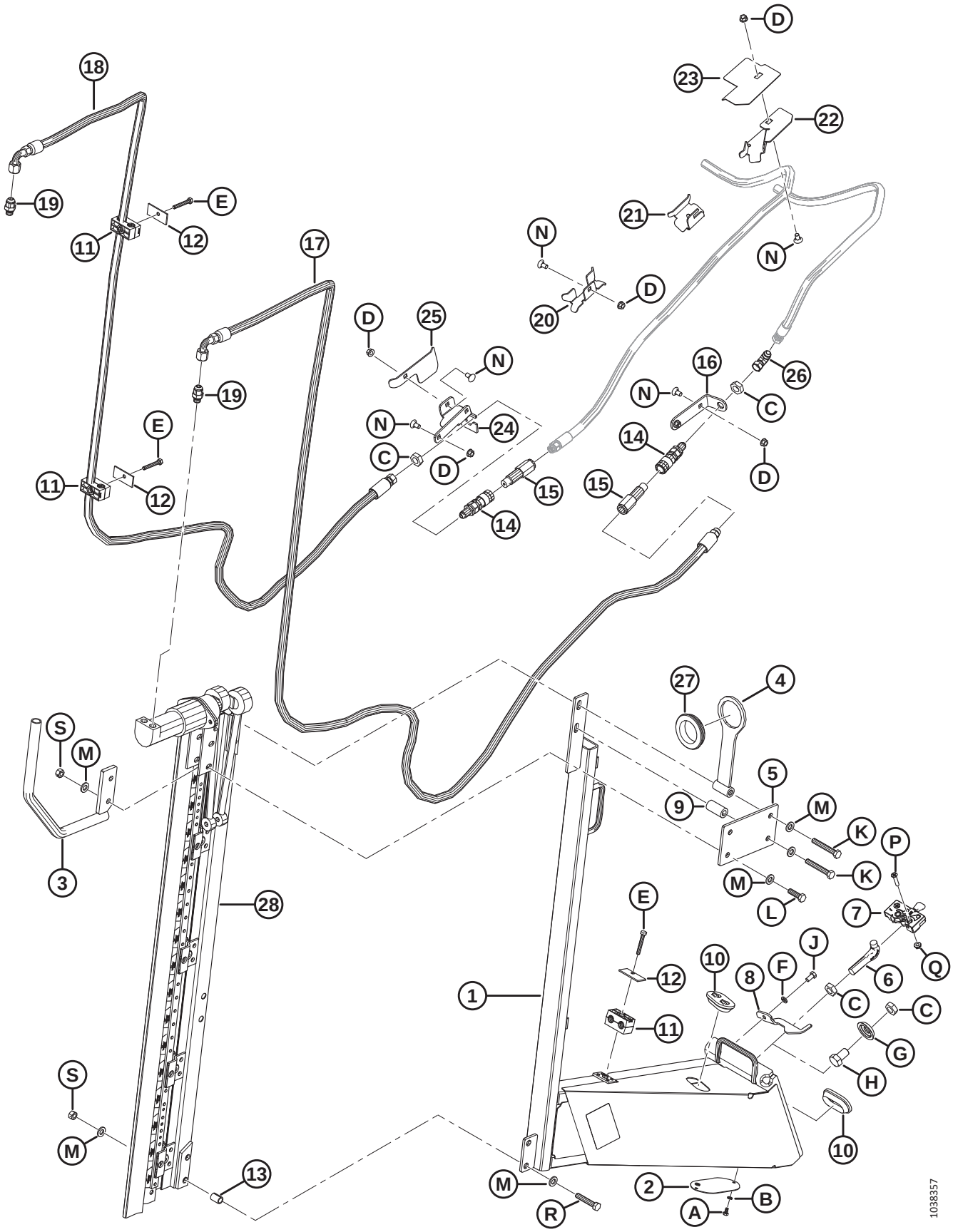

(OPTION) VERTICAL KNIFE – STANDARD REEL ARM, LEFT END (2022)

Ref	Part Number	Description	Qty	Serial Number
D	30228	NUT – FLANGE DT SMOOTH FACE 0.375-16 UNC		
E	184655	BOLT – HEX HD M8 X 1.25 X 55-8.8-AA1J		
F	18637	WASHER – REG. LOCK 3/8 IN. NOM. ID ZP		
G	253477	WASHER – VERTICAL KNIFE		
H	21590	BOLT – HH 3/4 NC X 1.25 LG GR 5 ZP		
J	21567	BOLT – HEX HD .375-16 UNC X 0.75 LG		
K	184674	BOLT – HEX HD TFL M12 X 1.75 X 80-8.8-AA1J		
L	184669	BOLT – HEX HD M1 2X 1.75 X 40-8.8-AA1J		
M	30636	WASHER – FLAT NARROW M12-STL-SOFT-AA1J		
N	21472	BOLT – RHSN 3/8-16 X .75-GR5		
P	30504	SCREW – FLAT CSK MACH 5/16 NC X 1 1/2 LG GR 5 ZP		
Q	30280	NUT – FLG SIDE LK SMTH FACE 5/16 NC GR 5 ZP		
R	252541	BOLT – HEX HD TFL M12 X 1.75 X 65-8.8-AA3L		
S	136759	NUT – HEX CTR LOC M12 X 1.75-8-AA1J		

79 (Option) Vertical Knife – Standard Reel Arm, Right End (2022)

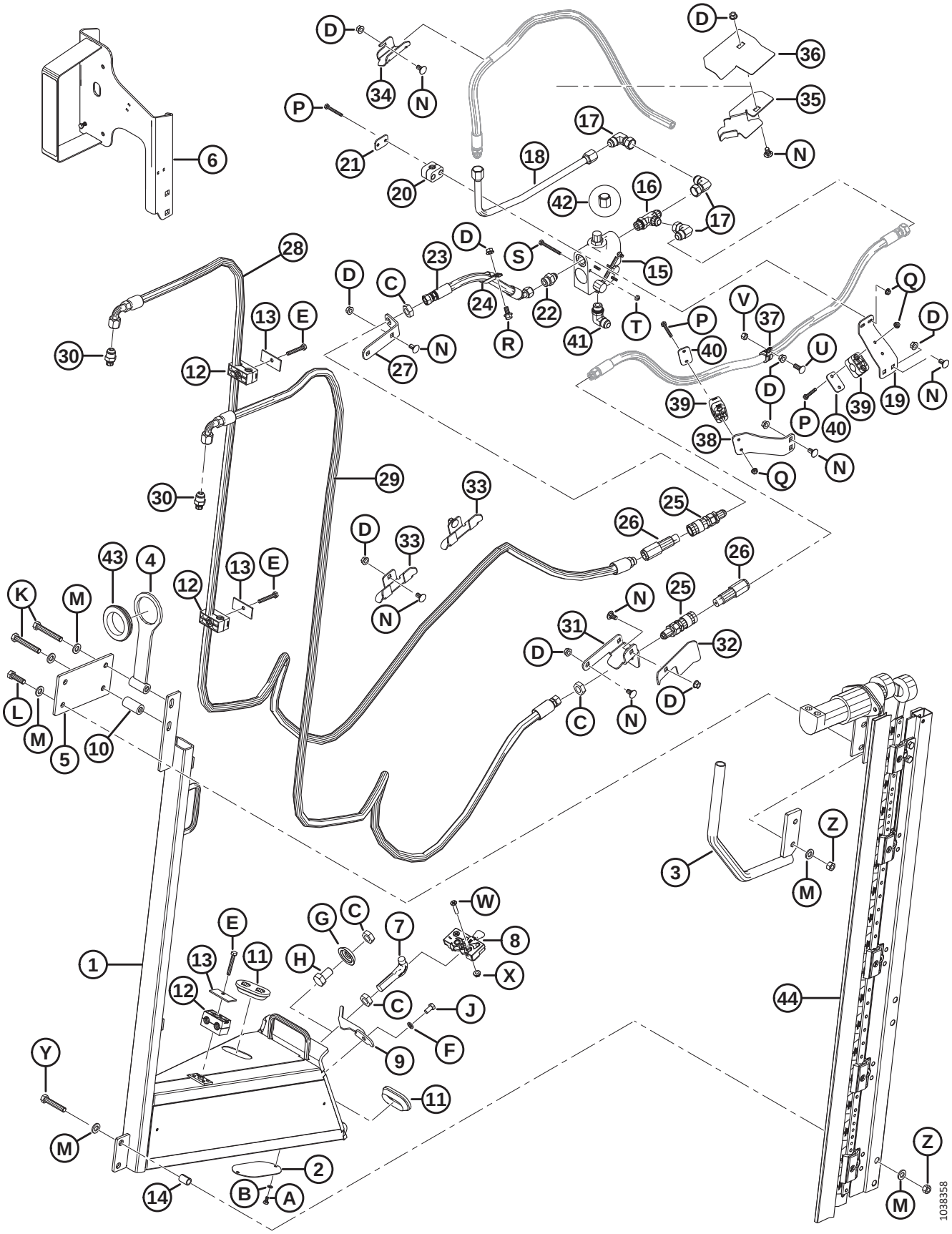

(OPTION) VERTICAL KNIFE – STANDARD REEL ARM, RIGHT END (2022)

Ref	Part Number	Description	Qty	Serial Number
	B9051	KIT – VERTICAL KNIFE RH, LONG MOUNT [282]		421190–
	B6410	KIT – ZIEGLER LH/RH VERTICAL KNIFES FOR D1/FD1 [283]		421190–
1	335866	SUPPORT ASSEMBLY – RH LONG [284]	1	421190–
2	253582	PLATE	1	421190–
3	335785	DIVIDER – TUBE WELDMENT	1	421190–
4	335784	SUPPORT – HOSE BRACKET	1	421190–
5	335779	SUPPORT – MOTOR BRACKET	1	421190–
6	294393	SUPPORT – RH LIGHT VERT KNIFE	1	421190–
	115146	REFLECTOR – AMBER		421190–
	115147	REFLECTOR – RED		421190–
7	132773	HOOK – DIVIDER LATCH	1	421190–
8	120932	LATCH – LH	1	421190–
9	132248	LATCH – LH, DIVIDER SAFETY	1	421190–
10	335810	TUBE – SPACER	1	421190–
11	165103	GROMMET	2	421190–
12	202991	CLAMP – TUBING	3	421190–
13	232233	CLAMP – COVER PLATE	3	421190–
14	335867	SPACER – SPLIT	2	421190–
15	174422	VALVE	1	421190–
	30054	SEAL KIT		421190–
16	50019	FITTING – TEE HYD STR THD RUN TEE CW O-RING	1	421190–
17	30556	FITTING – ELBOW 90° HYD	3	421190–
18	255471	LINE – HYDRAULIC	1	421190–
19	279001	SUPPORT – HOSE CLAMP	1	421190–
20	252399	CLAMP – ASSY	1	421190–
21	255461	PLATE – COVER	1	421190–
22	21881	FITTING – ADAPTER HYD	1	421190–
23	255462	HOSE – HYD	1	421190–
24	135235	CLAMP – DOUBLE HOSE INSULATED	1	421190–
25	135213	COUPLING – FEMALE HYD. 3/8 FLAT FACE BULKHEAD	2	421190–
26	135386	COUPLER – MALE HYD. 3/8 IN. FLAT FACE (FASTER) [285]	2	421190–
	111978	SEAL KIT – 3/8 MALE (FASTER ONLY)		421190–
27	245915	SUPPORT – HOSE COUPLER	1	421190–
28	335760	HOSE – HYDRAULIC, 0.5 IN ID, 3740 MM LG, 100 R17	1	421190–
29	335759	HOSE – HYDRAULIC, 0.5 IN ID, 3020 MM LG, 100 R17	1	421190–
30	252296	FITTING – ADAPTER-10 JIC X-6 BSPP	2	421190–
31	245955	SUPPORT – RH COUPLER	1	421190–

282. Kits available through Whole Goods only.
283. Kit includes two knives. Kits available through Whole Goods only.
284. Includes RH support (NSS), plate (MD #253582), two bolts (MD #21580), two washers (MD #18635), and decal (MD #174684).
285. Faster coupler (MD #135386) is interchangeable with Parker Hannifin coupler (NSS). Seal kit (MD #111978) is only intended for Faster coupler and cannot be used with Parker Hannifin coupler. Length can be used to differentiate the two couplers; Faster coupler = 101 mm and Parker Hannifin coupler = 84 mm.

(OPTION) VERTICAL KNIFE – STANDARD REEL ARM, RIGHT END (2022)

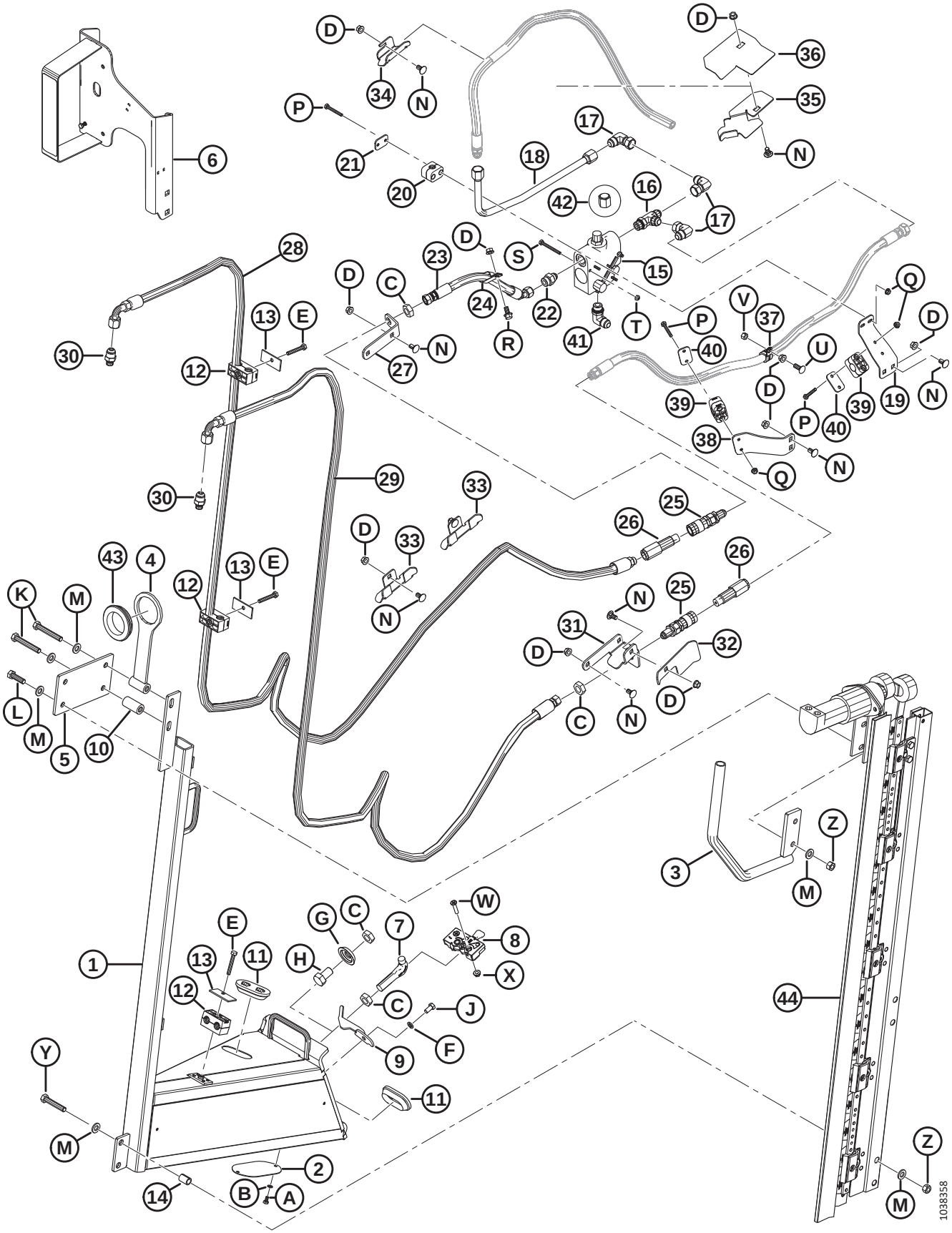

(OPTION) VERTICAL KNIFE – STANDARD REEL ARM, RIGHT END (2022)

Ref	Part Number	Description	Qty	Serial Number
32	279017	DEFLECTOR – RH HOSE	1	421190–
33	245931	SUPPORT – HOSE	2	421190–
34	245956	SUPPORT – HOSE	1	421190–
35	253703	SUPPORT – HOSE, RH	1	421190–
36	253705	GUIDE – HOSE, RH	1	421190–
37	135709	CLAMP – INSULATED 3/4 IN	1	421190–
38	245946	SUPPORT – HOSE CLAMP	1	421190–
39	252368	CLAMP – ASSY	2	421190–
40	255460	PLATE – COVER	2	421190–
41	21843	FITTING – ELBOW 90° HYD	1	421190–
42	112935	CAP – 5/8 IN. TUBE 37° FLARE	1	421190–
43	172877	GROMMET – 2.38" I.D.	1	421190–
44	NSS	ZIEGLER VERTICAL KNIFE [286]		421190–
	294995	HOSE – HYD, 12.5 IN. I.D., 520 MM LG, 100R17 METAL REIN. (NOT ILLUSTRATED) [287]	1	421190–
	50102	FITTING – HYD TEE (NOT ILLUSTRATED) [287]	1	421190–
A	21580	BOLT – HEX HD 1/4 NC X 0.5 LG GR 5 ZP		
B	18635	WASHER – REG. LOCK 1/4 IN. NOM. ID ZP		
C	7674	NUT – HEX JAM 3/4-16 UNF GR 5 ZP		
D	30228	NUT – FLANGE DT SMOOTH FACE 0.375-16 UNC		
E	184655	BOLT – HEX HD M8 X 1.25 X 55-8.8-AA1J		
F	18637	WASHER – REG. LOCK 3/8 IN. NOM. ID ZP		
G	253477	WASHER – VERTICAL KNIFE		
H	21590	BOLT – HH 3/4 NC X 1.25 LG GR 5 ZP		
J	21567	BOLT – HEX HD .375-16 UNC X 0.75 LG		
K	184674	BOLT – HEX HD TFL M12 X 1.75 X 80-8.8-AA1J		
L	184669	BOLT – HEX HD M1 2X 1.75 X 40-8.8-AA1J		
M	30636	WASHER – FLAT NARROW M12-STL-SOFT-AA1J		
N	21472	BOLT – RHSN 3/8-16 X .75-GR5		
P	21570	BOLT – HH 1/4 NC X 2.0 LG GR 5 ZP		
Q	135248	NUT – FLG SMTH FACE 1/4-20 NC GR 5 ZP CTR LK DT THD		
R	21821	BOLT – HH FLG (SERR FACE) 3/8 NC X 0.75 GR 5 ZP		
S	21854	BOLT – HH 1/4 NC X 2.5 LG GR 5 ZP		
T	18724	NUT – HEX LOCK DT 1/4-20 UNC ZP		
U	100456	BOLT – RHSSN 3/8 NC X 1.0 GR 5 ZP		
V	135511	NUT – CENTER LOCK .375-16 UNC GR 5 ZP		
W	30504	SCREW – FLAT CSK MACH 5/16 NC X 1 1/2 LG GR 5 ZP		
X	30280	NUT – FLG SIDE LK SMTH FACE 5/16 NC GR 5 ZP		

286. Not sold separately, can be ordered as a set of two knives (MD #B6410). For service parts, refer to Section *83 (Option) Vertical Knife Assembly – Service Parts, page 245*.
287. For D1XL only. Part is required to make vertical knife bundles (MD #B6608 and B6609) compatible with D1XL Headers.

(OPTION) VERTICAL KNIFE – STANDARD REEL ARM, RIGHT END (2022)

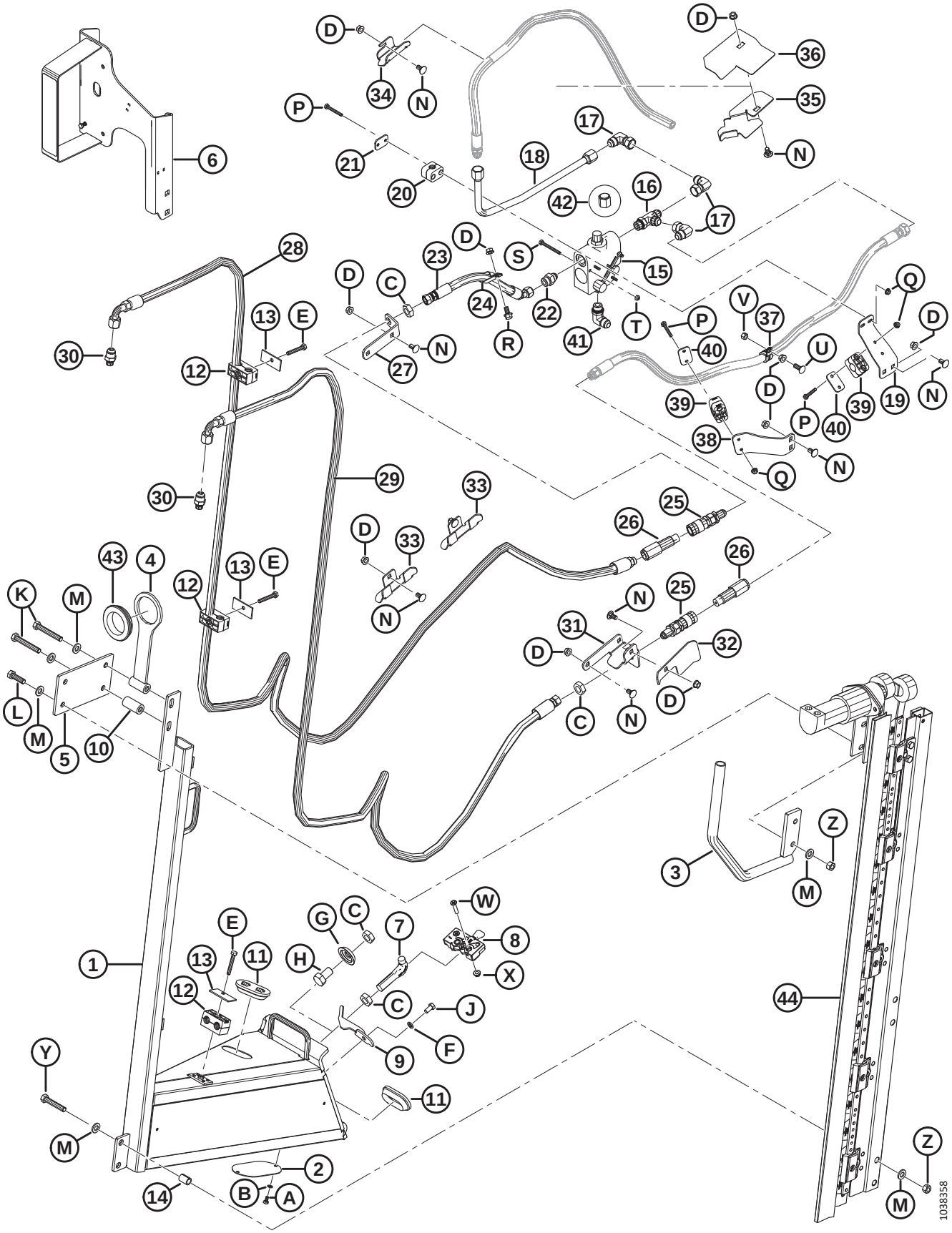

(OPTION) VERTICAL KNIFE – STANDARD REEL ARM, RIGHT END (2022)

Ref	Part Number	Description	Qty	Serial Number
Y	**252541**	**BOLT – HEX HD TFL M12 X 1.75 X 65-8.8-AA3L**		
Z	**136759**	**NUT – HEX CTR LOC M12 X 1.75-8-AA1J**		

80 (Option) Vertical Knife – Short Reel Arms

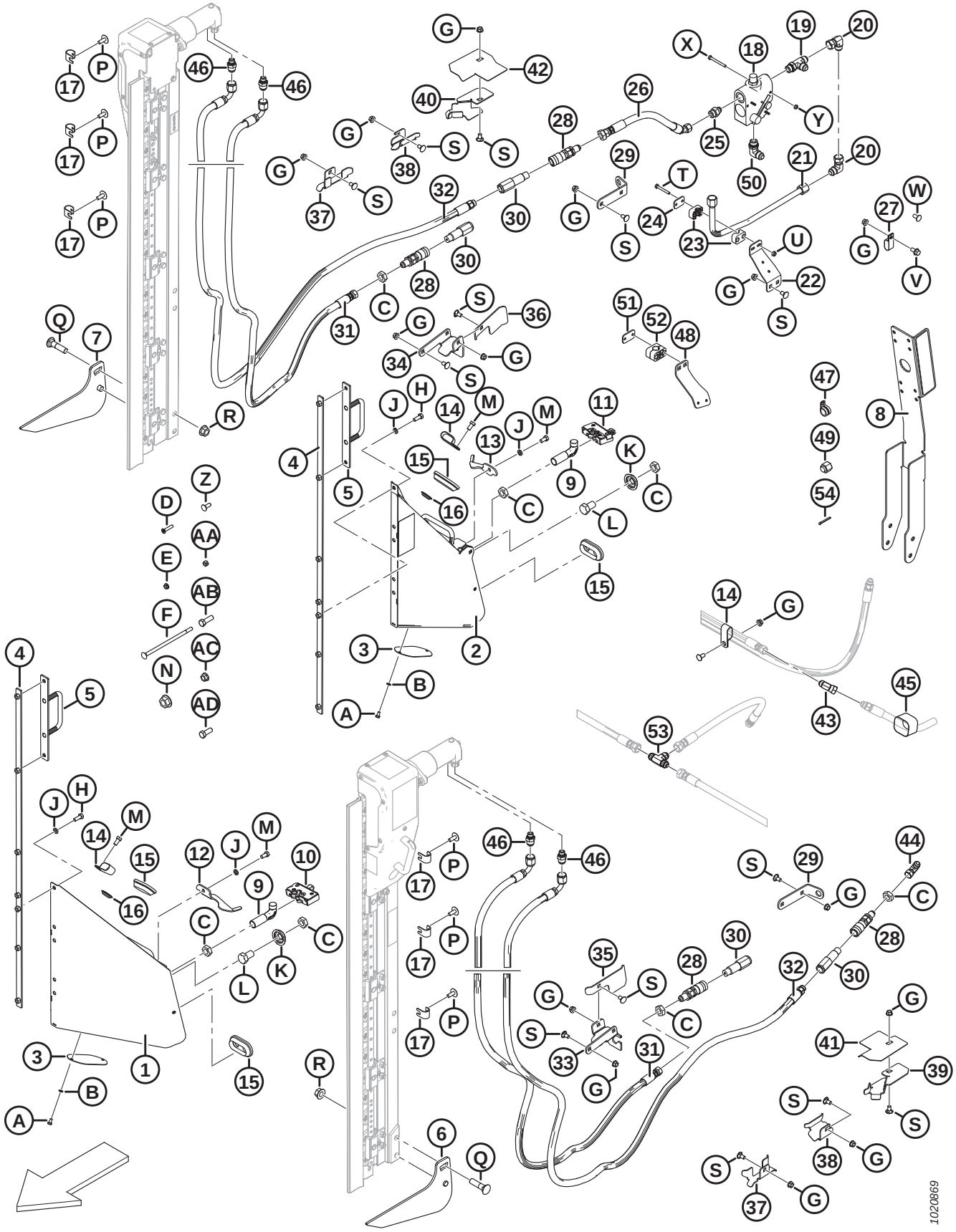

(OPTION) VERTICAL KNIFE – SHORT REEL ARMS

NOTE:
Vertical Knife Mounts (MD #B6137 and B6138) are **NOT** compatible with Reel Arm Extension Kit (MD #B6591).

Ref	Part Number	Description	Qty B6137/B6138	Serial Number
	B6137	KIT – VERTICAL KNIFE, LEFT (EXPORT ONLY) [288]	1/0	
	B6138	KIT – VERTICAL KNIFE, RIGHT (EXPORT ONLY) [288]	0/1	
1	253681	SUPPORT ASSEMBLY (LH) [289]	1/0	
2	253680	SUPPORT ASSEMBLY (RH) [289]	0/1	
3	253582	PLATE	1/0	
4	253668	SUPPORT WELDMENT	1/1	
5	253570	SUPPORT WELDMENT	1/1	
6	253708	LIFTER LEFT WELDMENT	1/0	
7	253709	LIFTER RIGHT WELDMENT	0/1	
8	253696	SUPPORT ASSEMBLY [290]	0/1	
9	132773	HOOK – DIVIDER LATCH	1/1	
10	120932	LATCH (LH)	1/0	
11	120933	LATCH (RH)	0/1	
12	132248	LATCH – LH, DIVIDER SAFETY	1/0	
13	132253	LATCH – RH, DIVIDER SAFETY	0/1	
14	103738	CLAMP – PVC INSULATED 13/16 IN. TUBE SIZE	1/7	
15	165103	GROMMET	2/2	
16	253678	PLUG	3/3	
17	279798	SUPPORT	6/6	
18	174422	VALVE [291]	0/1	
	30054	SEAL KIT		
19	50019	FITTING – TEE HYD STR THD RUN TEE CW O-RING	0/1	
20	30556	FITTING – ELBOW 90° HYD	0/3	
21	255471	LINE – HYDRAULIC	0/1	
22	279001	SUPPORT – HOSE CLAMP	0/1	
23	252399	CLAMP – ASSY	0/1	
24	255461	PLATE – COVER	0/1	
25	21881	FITTING – ADAPTER HYD	0/1	
26	255462	HOSE – HYD	0/1	
27	135235	CLAMP – DOUBLE HOSE INSULATED	0/1	
28	135213	COUPLING – FEMALE HYD. 3/8 FLAT FACE BULKHEAD	2/2	
29	245915	SUPPORT – HOSE COUPLER	1/1	

288. Additional hose kit is required to install left and right vertical knife. For vertical knife hose kits, refer to Section *82 (Option) Vertical Knife Hose Kits – Standard and Short Reel Arms, Double Reel, page 243*. Kits available through Whole Goods only.
289. Includes plate (MD #253582), bolt (MD #21580), washer (MD #18635), and decal (MD #174684).
290. Includes reflector (MD #115147).
291. Includes seal kit (MD #30054).

(OPTION) VERTICAL KNIFE – SHORT REEL ARMS

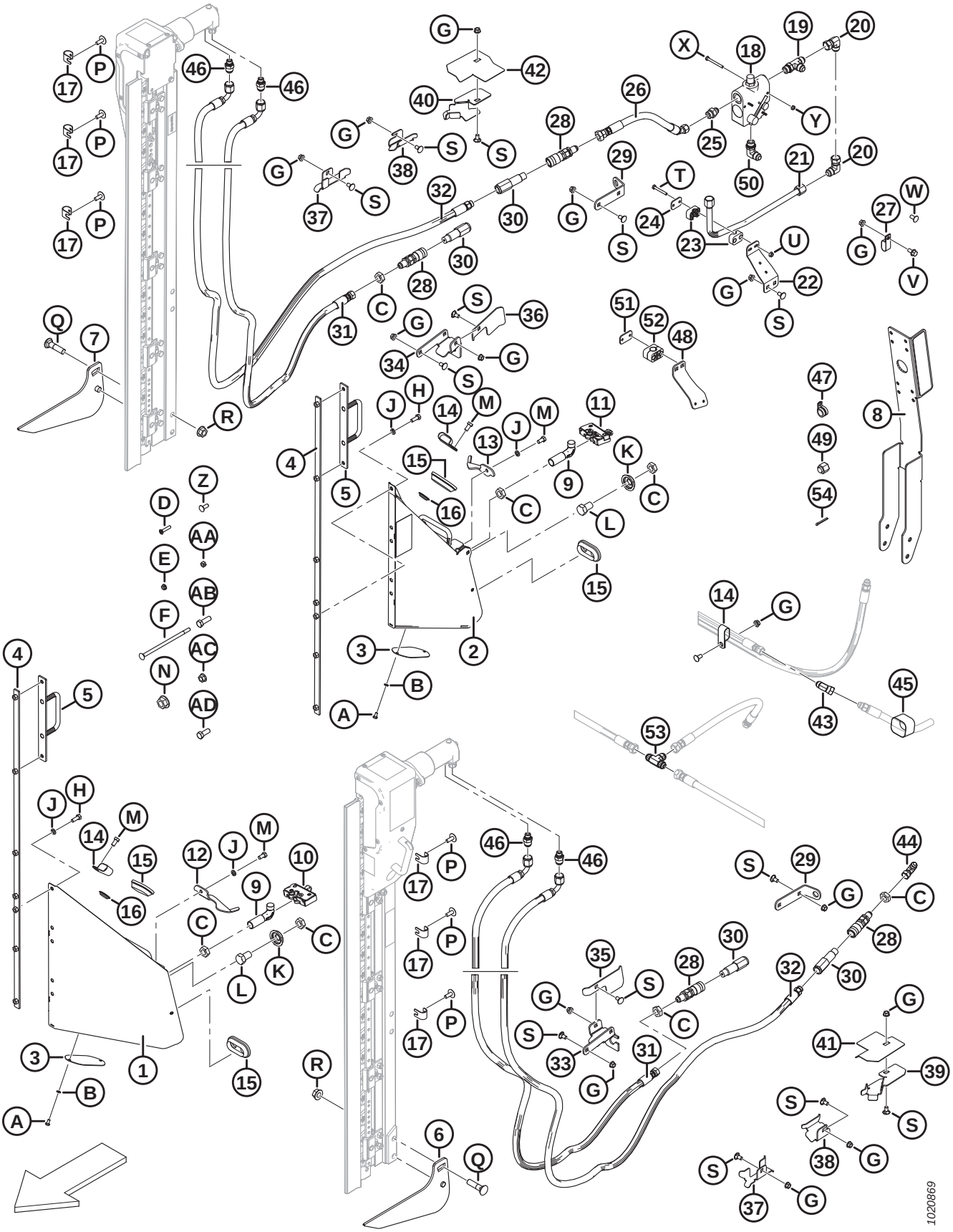

(OPTION) VERTICAL KNIFE – SHORT REEL ARMS

Ref	Part Number	Description	Qty B6137/B6138	Serial Number
30	135386	COUPLER – MALE HYD. 3/8 IN. FLAT FACE (FASTER) [292]	2/2	
	111978	SEAL KIT – 3/8 MALE (FASTER ONLY)		
31	255509	HOSE – HYD	1/1	
32	255510	HOSE – HYD	1/1	
33	245928	SUPPORT – LH COUPLER	1/0	
34	245955	SUPPORT – RH COUPLER	0/1	
35	245936	DEFLECTOR – LH HOSE	1/0	
36	279017	DEFLECTOR – RH HOSE	0/1	
37	245931	SUPPORT – HOSE	1/2	
38	245956	SUPPORT – HOSE	1/1	
39	253702	SUPPORT – HOSE, LH	1/0	
40	253703	SUPPORT – HOSE, RH	0/1	
41	253704	GUIDE – HOSE, LH	1/0	
42	253705	GUIDE – HOSE, RH	0/1	
43	135685	FITTING – ELBOW 45° HYD	0/1	
44	30314	FITTING – ELBOW 90° HYD	1/0	
45	135443	FASTENER – CINCH STRAP 4 IN. LG	0/3	
46	252296	FITTING – ADAPTER-10 JIC X-6 BSPP	2/2	
47	135709	CLAMP – INSULATED 3/4 IN.	0/1	
48	245946	SUPPORT – HOSE CLAMP	0/1	
49	112935	CAP – 5/8 IN. TUBE 37 DEG FLARE	0/1	
50	21843	FITTING – ELBOW 90° HYD	0/1	
51	255460	PLATE – COVER	0/2	
52	252368	CLAMP – ASSY	0/2	
53	30551	FITTING – TEE HYD	0/1	
54	18607	PIN – COTTER 5/32 DIA X 1.5 ZP	0/1	
A	21580	BOLT – HEX HD 1/4 NC X 0.5 LG GR 5 ZP		
B	18635	WASHER – REG. LOCK 1/4 IN. NOM. I.D. ZP		
C	7674	NUT – HEX JAM 3/4-16 UNF GR 5 ZP		
D	30504	SCREW – FLAT CSK MACH 5/16 NC X 1-1/2 LG GR 5 ZP		
E	30280	NUT – FLG SIDE LK SMTH FACE 5/16 NC GR 5 ZP		
F	135665	BOLT – RHSN 3/8-16 X 8-GR5-ZP		
G	30228	NUT – FLG DT SMTH FACE 0.375-16 UNC		
H	20077	BOLT – HEX HD 3/8 NC X 1.0 LG GR 5 ZP		
J	18637	WASHER – REG. LOCK 3/8 IN. NOM. I.D. ZP		
K	253477	WASHER – VERTICAL KNIFE		
L	21590	BOLT – HH 3/4 NC X 1.25 LG GR 5 ZP		

292. Faster coupler (MD #135386) is interchangeable with Parker Hannifin coupler (NSS). Seal kit (MD #111978) is only intended for Faster coupler and cannot be used with Parker Hannifin coupler. Length can be used to differentiate the two couplers; Faster coupler = 101 mm and Parker Hannifin coupler = 84 mm.

(OPTION) VERTICAL KNIFE – SHORT REEL ARMS

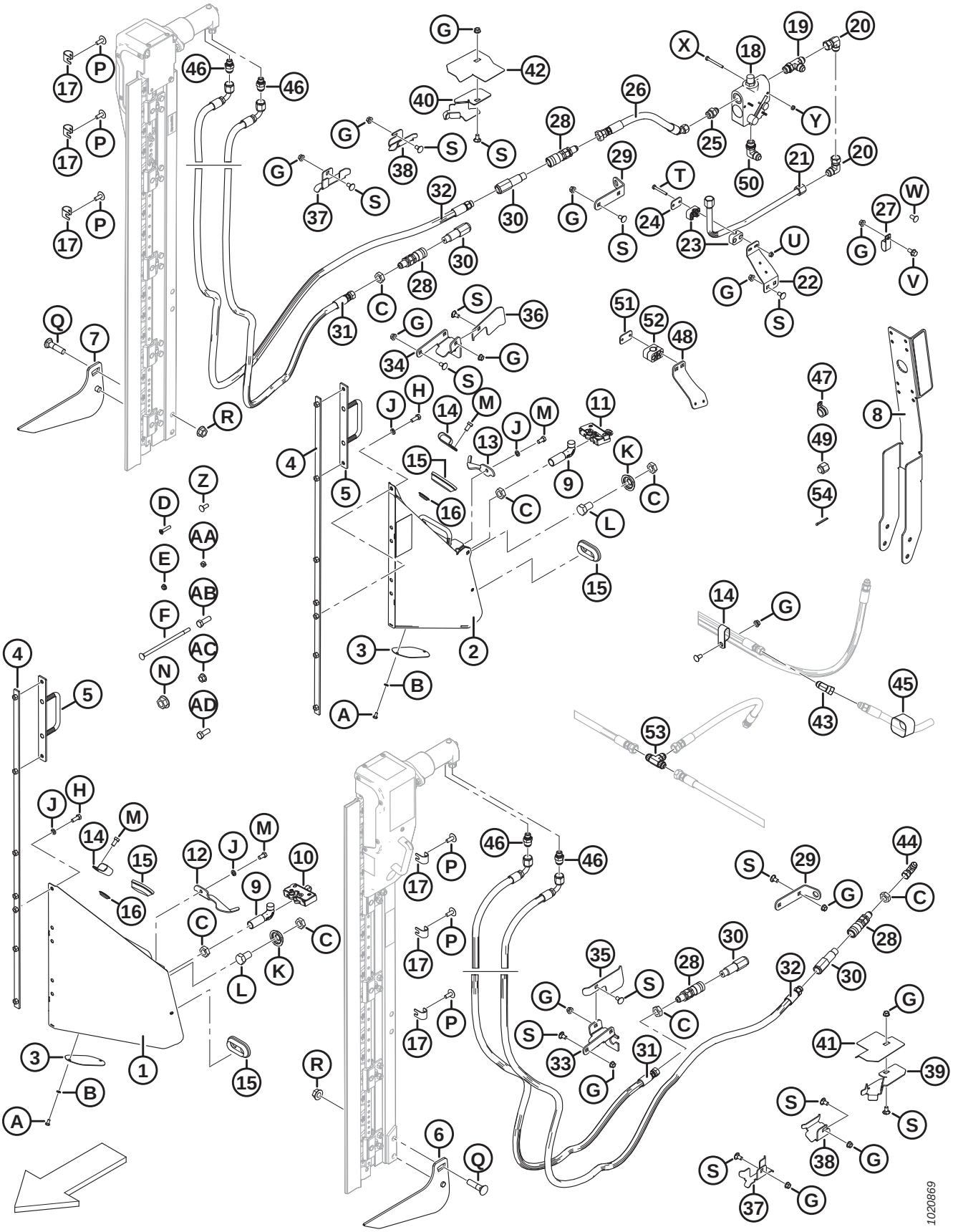

(OPTION) VERTICAL KNIFE – SHORT REEL ARMS

Ref	Part Number	Description	Qty B6137/B6138	Serial Number
M	21567	BOLT – HEX HD .375-16 UNC X 0.75 LG		
N	135367	NUT – FLANGE DT SMTH FACE 0.75-10 UNC GR. G		
P	135507	SCREW – MACHINE,TRUSS HD TORX, 38 NC X 1 LG		
Q	30759	BOLT – RHSSN 5/8 NC X 2.5 LG GR 5 ZP		
R	50225	NUT – FLANGE DT SMOOTH FACE .625-11 UNC		
S	21472	BOLT – RHSN 3/8-16 X .75-GR5		
T	21570	BOLT – HH 1/4 NC X 2.0 LG GR 5 ZP		
U	135248	NUT – FLG SMTH FACE 1/4-20 NC GR 5 ZP CTR LK DT		
V	21821	BOLT – HH FLG (SER FACE) 3/8 NC X 0.75 GR 5 ZP		
W	21863	BOLT – RHSSN 3/8 NC X 0.75 LG GR 5 ZP		
X	21854	BOLT – HH 1/4 NC X 2.5 LG GR 5 ZP		
Y	18724	NUT – HEX LOCK DT 1/4-20 UNC ZP		
Z	100456	BOLT – RHSSN 3/8 NC X 1.0 GR 5 ZP		
AA	135511	NUT – CENTER LOCK .375-16 UNC GR 5 ZP		
AB	18723	BOLT – HH 1/2 NC X 1.5 LG TFL GR 5 ZP		
AC	50186	NUT – FLG LK SM FACE DT 0.500-13 UNC GR 5		
AD	21491	BOLT – HH 1/2 NC X 1.25 LG GR 5 ZP		

81 (Option) Vertical Knife Hose Kits – Standard and Short Reel Arms, Single Reel

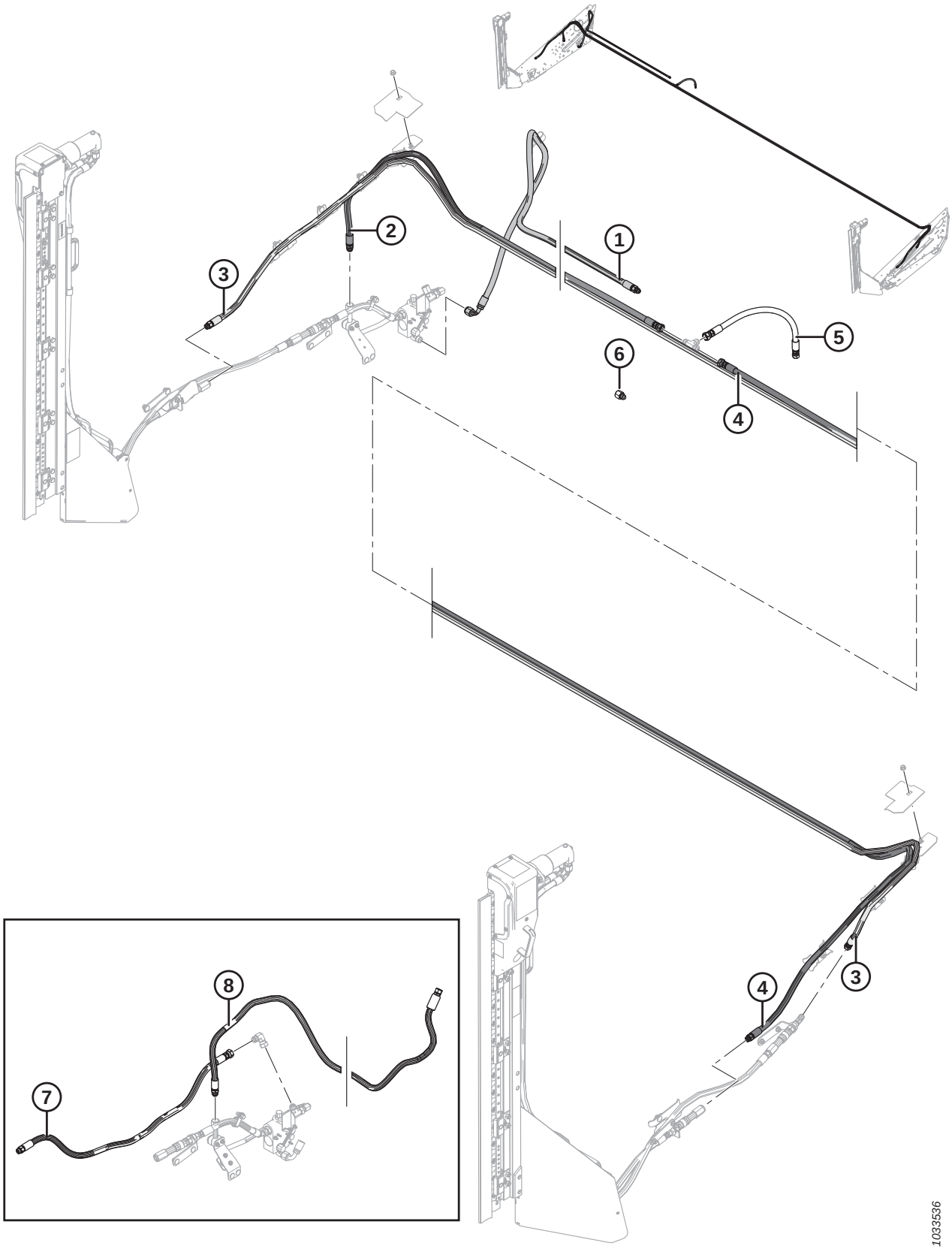

(OPTION) VERTICAL KNIFE HOSE KITS – STANDARD AND SHORT REEL ARMS, SINGLE REEL

NOTE:

Hose kits to be used in conjunction with vertical knife kits MD #B6137 and MD #B6138 (short reel arms), or MD #B6608 and MD #B6609 (standard reel arms).

Ref	Part Number	Description	Qty	Serial Number
	B6265	KIT – DBL VERTICAL KNIFE HOSE (25 FT RIGID/FLEX, SR) [293]	1	
1	255947	HOSE – HYDRAULIC	1	
2	255574	HOSE – HYDRAULIC (25 FT, SR)	1	
3	255577	HOSE – HYDRAULIC (25 FT, SR)	1	
4	255580	HOSE – HYDRAULIC (25 FT, SR)	1	
5	255497	HOSE – HYDRAULIC	1	
6	30820	FITTING – ADAPTER REDUCER (25 FT FLEX, SR)	1	
7	255465	HOSE – HYDRAULIC (SINGLE VERTICAL KNIFE ONLY) [294]	A/R	
8	255583	HOSE – HYDRAULIC (25 FT, SR, SINGLE VERTICAL KNIFE ONLY) [294]	A/R	

293. Kits available through Whole Goods only.
294. Not included in vertical knife hose kits. Hose is used when mounting the right vertical knife by itself.

82 (Option) Vertical Knife Hose Kits – Standard and Short Reel Arms, Double Reel

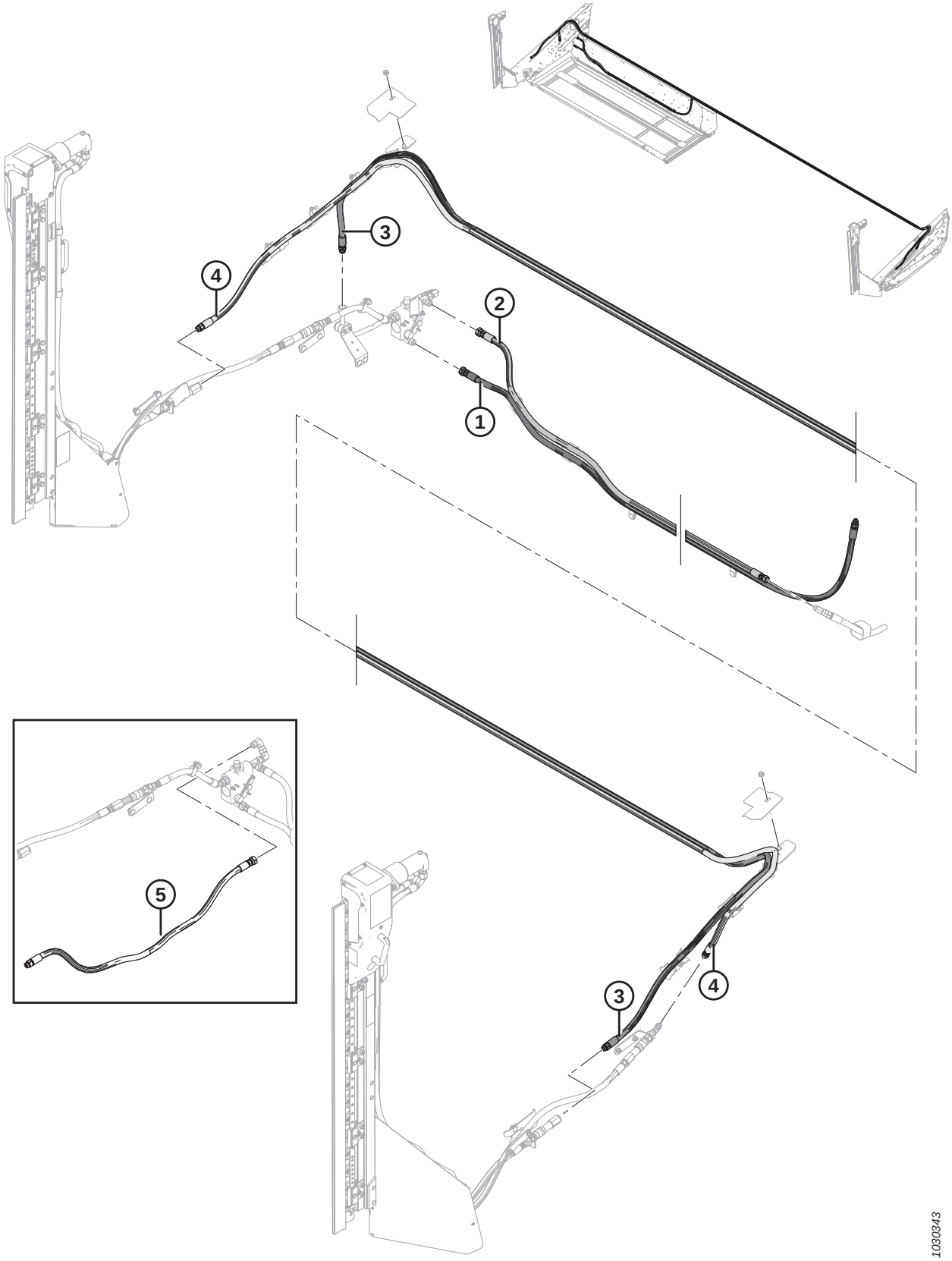

(OPTION) VERTICAL KNIFE HOSE KITS – STANDARD AND SHORT REEL ARMS, DOUBLE REEL

NOTE:

Hose kits to be used in conjunction with Vertical Knife kits MD #B6137 and MD #B6138 (short reel arms), or MD #B6608 and MD #B6609 (standard reel arms).

Ref	Part Number	Description	Qty	Serial Number
	B6247	KIT – DOUBLE VERTICAL KNIFE HOSE (30 FT FLEX) [295]		
	B6248	KIT – DOUBLE VERTICAL KNIFE HOSE (35 FT FLEX) [295]		
	B6249	KIT – DOUBLE VERTICAL KNIFE HOSE (40 FT FLEX) [295]		
	B6250	KIT – DOUBLE VERTICAL KNIFE HOSE (45 FT FLEX) [295]		
1	255477	HOSE – HYD (30 FT FLEX)	1	
	255534	HOSE – HYD (35 FT FLEX)	1	
	255535	HOSE – HYD (40 FT FLEX)	1	
	255536	HOSE – HYD (45 FT FLEX)	1	
2	255476	HOSE – HYD (30 FT FLEX)	1	
	255537	HOSE – HYD (35 FT FLEX)	1	
	255538	HOSE – HYD (40 FT FLEX)	1	
	255539	HOSE – HYD (45 FT FLEX)	1	
3	255540	HOSE – HYD (30 FT FLEX)	1	
	255541	HOSE – HYD (35 FT FLEX)	1	
	255542	HOSE – HYD (40 FT FLEX)	1	
	255543	HOSE – HYD (45 FT FLEX)	1	
4	255544	HOSE – HYD (30 FT FLEX)	1	
	255545	HOSE – HYD (35 FT FLEX)	1	
	255546	HOSE – HYD (40 FT FLEX)	1	
	255547	HOSE – HYD (45 FT FLEX)	1	
5	255465	HOSE – HYDRAULIC (SINGLE VERTICAL KNIFE ONLY) [296]	A/R	

295. Kit provides hoses required to install left and right vertical knife on specified header with short reel arms. For left and right vertical knife mounts, refer to Section *80 (Option) Vertical Knife – Short Reel Arms, page 235*. Kits available through Whole Goods only.
296. Not included in vertical knife hose kits. Hose is used when mounting the right vertical knife by itself.

83 (Option) Vertical Knife Assembly – Service Parts

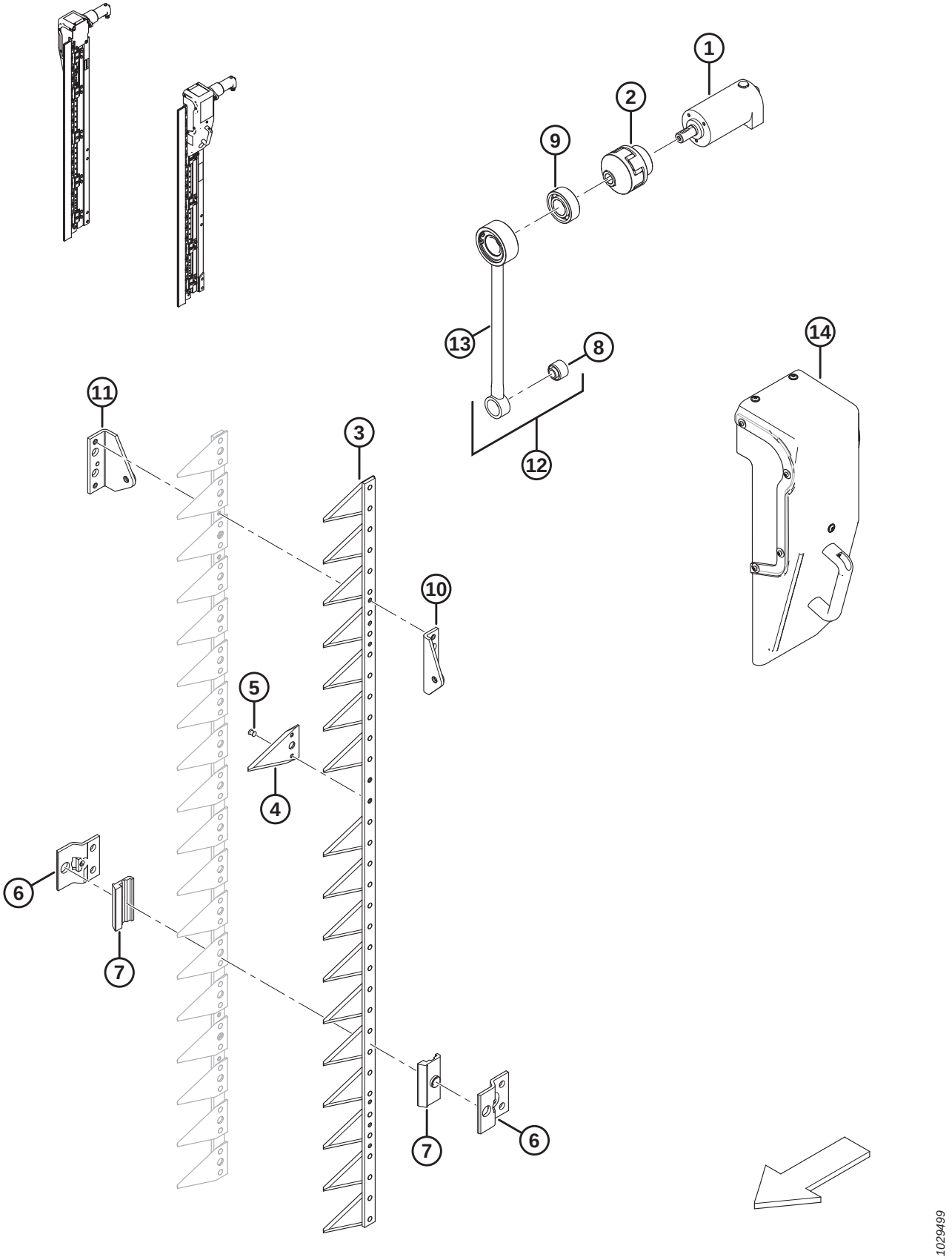

(OPTION) VERTICAL KNIFE ASSEMBLY – SERVICE PARTS

NOTE:

All parts listed are for service only. Vertical Knives can be ordered as a set of two knives (MD #B6410).

Ref	Part Number	Description	Qty	Serial Number
1	304611	HYDRAULIC MOTOR		
2	304612	COUPLING – ELASTIC SHAFT		
3	304614	ASSEMBLY – KNIFE [297]		
4	304615	SECTION – KNIFE		
5	304616	RIVET		
6	304617	HOLDER – KNIFE		
7	304618	PLATE – GUIDE		
8	304619	BUSHING – RUBBER METAL		
9	304620	BEARING – SELF-ALIGNING		
10	304621	HEAD – KNIFE FRONT		
11	304622	HEAD – KNIFE REAR		
12	304623	ASSEMBLY – CONNECTING ROD [298]		
13	304624	ROD – CONNECTING		
14	304625	GUARD – LEFT/RIGHT CRANK [299]		

297. Includes knife sections (MD #304615) and rivets (MD #304616).
298. Includes connecting rod (MD #304624) and bushing (MD #304619).
299. Includes a front plate, which is shipped in the left guard configuration. If the guard will be used on the right knife, the plate must be moved to the opposite side of the guard.

84 Float Module Frame and Components

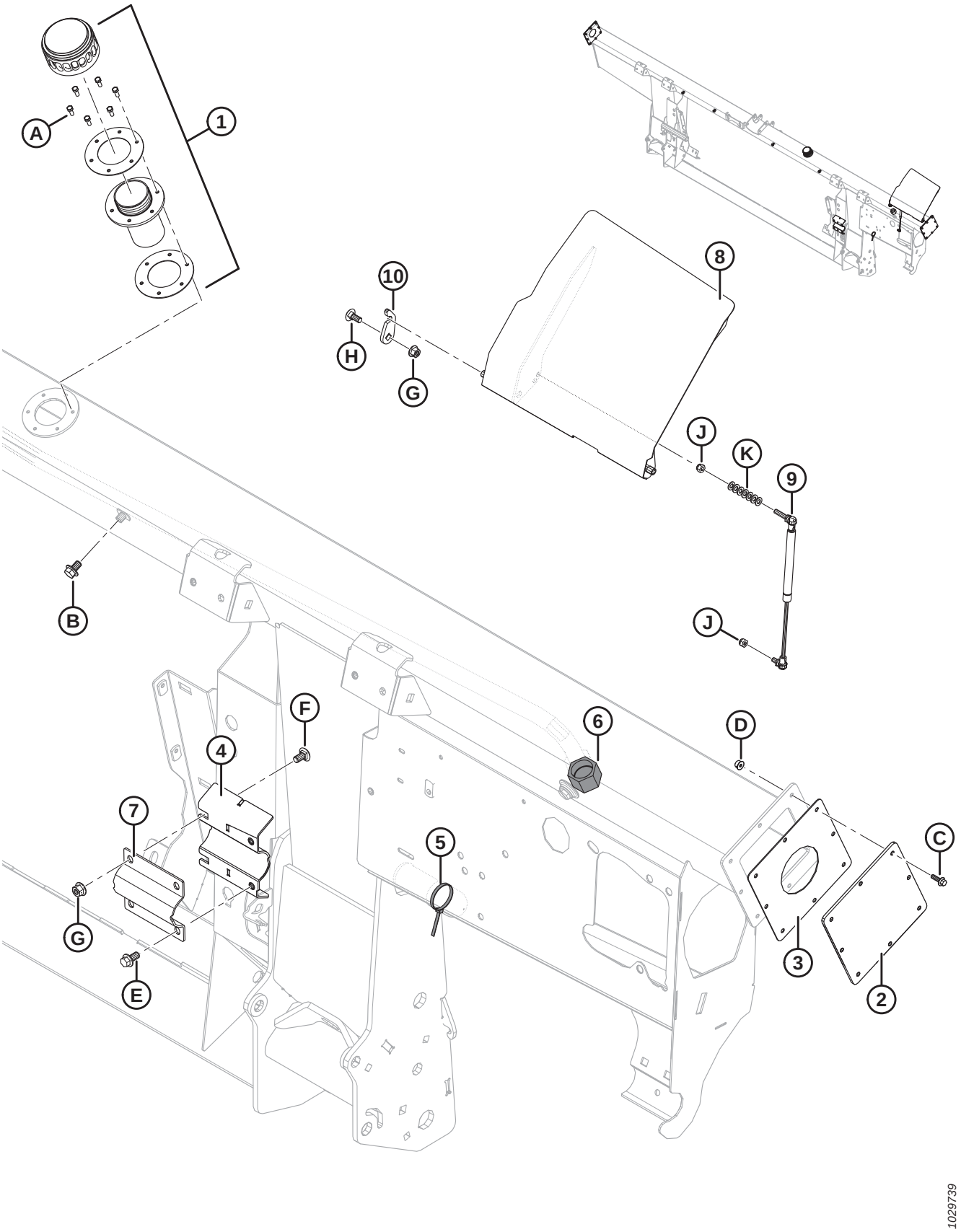

FLOAT MODULE FRAME AND COMPONENTS

Ref	Part Number	Description	Qty	Serial Number
1	133942	CAP – OIL FILLER [300]	1	
	312706	**KIT – OIL FILL GASKETS** [301]	**1**	
2	240101	PLATE – END COVER [302]	2	–371189
3	187112	GASKET [302]	2	–371189
4	248757	BRACKET – SUB WELDT (WELDED TO FRAME)	1	
5	21763	FASTENER – CABLE TIE (BLACK)	1	
6	135718	CAP – HYD SAE-16 ORFS	1	
7	248756	CLAMP – AUGER PIVOT	1	
8	304325	COVER – C/W DECAL	1	
9	295981	GAS SPRING	1	
10	213764	RETAINER – COVER	1	
A	**320397**	**SCREW – HEX HD TFL M5 X 0.8 X 12-8.8-PLAIN (2022 AND LATER)** [303]		**421190–**
	135873	SCREW – MACH #10-32 X 0.5 IN. HEX **(2021 AND PRIOR)** [303]		**–421189**
B	REF	BOLT – HEX FLG HD TFL M10 X 1.5 X 16-8.8-A3L [304]		
C	136324	BOLT – HEX FLG HD TFL M6 X 1 X 20-10.9-A2L		
D	152668	NUT – HEX FLG CTR LOC M6 X 1-8-A2L		
E	152655	BOLT – HEX FLG HD M10 X 1.5 X 20-8.8-A3L		
F	184657	BOLT – RHSSN M10 X 1.5 X 20-8.8-A3L		
G	135799	NUT – HEX FLG CTR LOC M10 X 1.5-10-A3L		
H	135785	BOLT – RHSN M10 X 1.5 X 25-8.8-A3L		
J	184688	NUT – HEX NYLOC M8 X 1.25-8-A2L		
K	184708	WASHER – FLAT M8-200HV-AA1J		

300. Remove cap and gasket covering fill hole during shipping (not shown). Retain six screws (MD #135873). Replace with oil filler cap (MD #133942) which comes complete with oil cap, filler neck, and gaskets. Use six screws saved from shipping cap to attach oil filler cap to frame. Oil filler cap comes shipped with frame or can be ordered as a replacement.
301. Includes two gaskets.
302. Service part only for units made in model year 2019 and prior.
303. Comes with the cap and gasket that cover the fill hole during shipping. Can be ordered separately if needed as a replacement.
304. Refer to Section *104 Hydraulics – Frame Components, page 307*.

85 Feed Deck – Frame, Front Links, and Pivot Pins

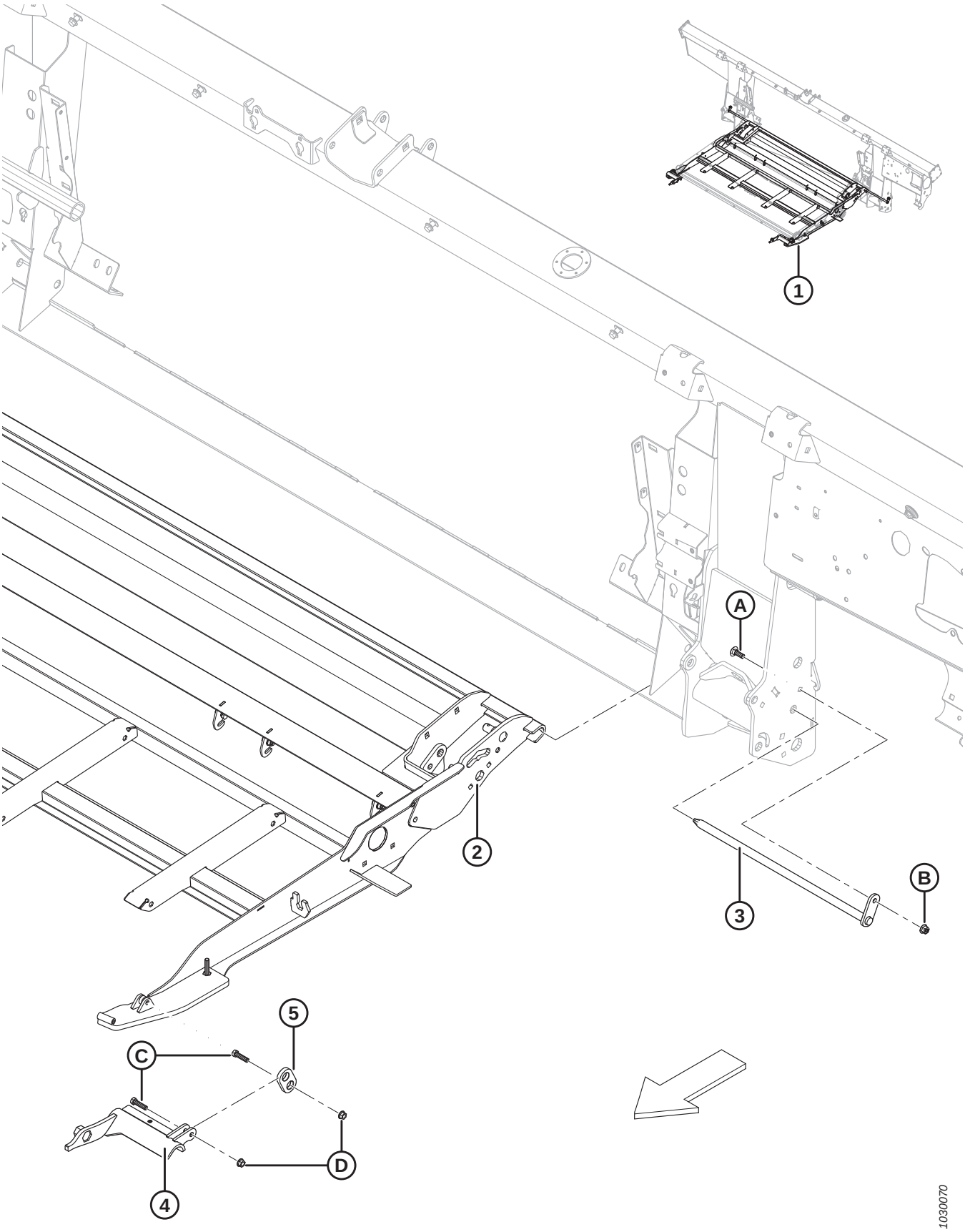

FEED DECK – FRAME, FRONT LINKS, AND PIVOT PINS

Ref	Part Number	Description	Qty	Serial Number
1	335286	ASSEMBLY – FEED DECK [305]		
2	287760	CARRIER – FEED DECK	1	
3	231368	PIN – DECK PIVOT WELDT	2	
4	213418	SUPPORT – LH ADAPTER LINK MACH	1	
	213419	SUPPORT – RH ADAPTER LINK MACH	1	
5	187732	LINK – HOOK ASSY	2	
A	184662	BOLT – RHSN TFL M10 X 1.5 X 30-8.8-A3L		
B	135799	NUT – HEX FLG CTR LOC M10 X 1.5-10-A3L		
C	20078	BOLT – HH 3/8 NC X 1.75 LG GR 5 ZP		
D	30228	NUT – FLANGE DT SMTH FACE 0.375-16 UNC		

305. Complete assembly, includes all listed parts from this section (except #3 and A-B) as well as Sections *86 Feed Deck – Draper Drive and Rollers, page 251* and *87 Feed Deck – Pans and Fillers, page 255*.

86 Feed Deck – Draper Drive and Rollers

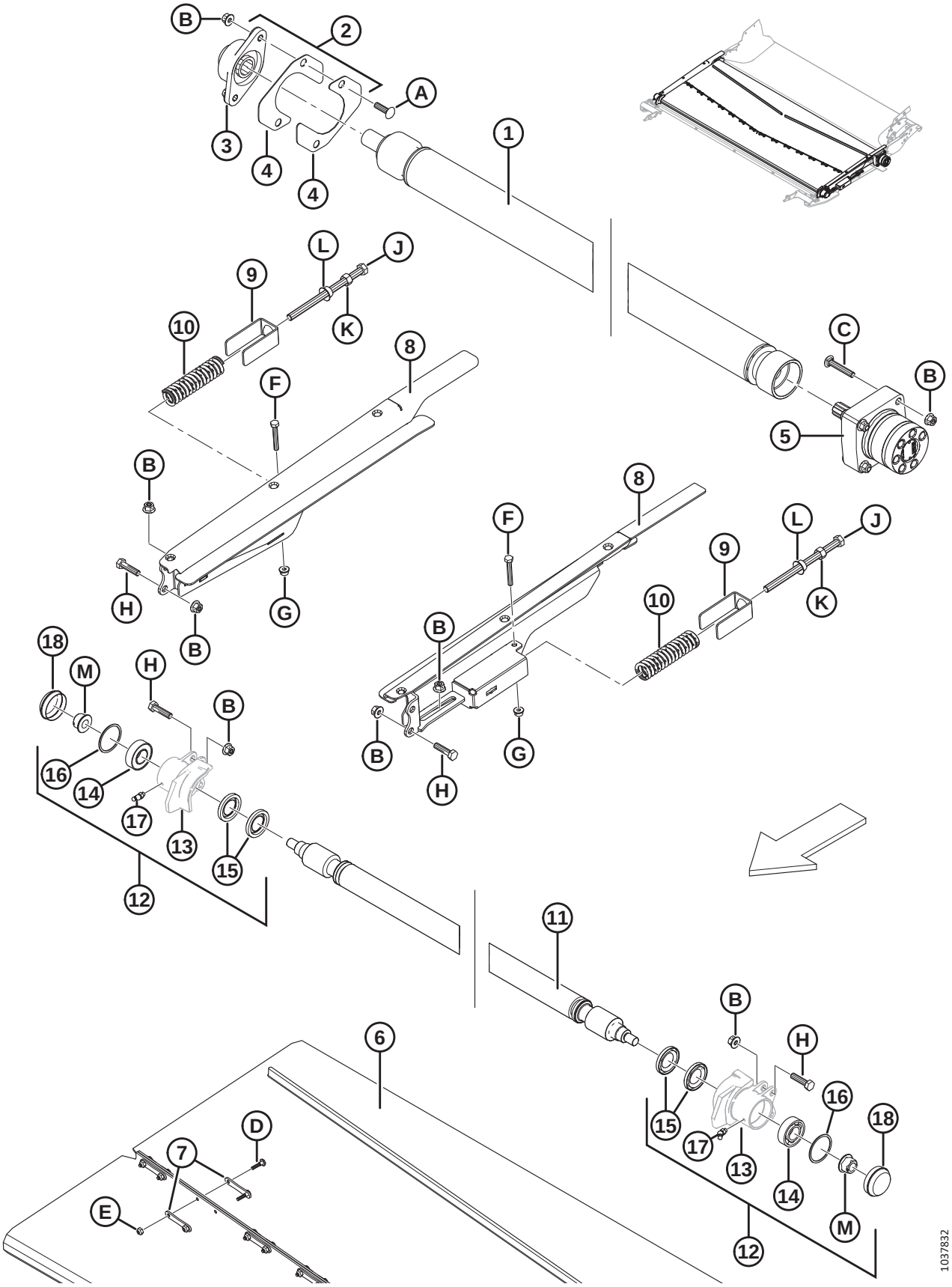

FEED DECK – DRAPER DRIVE AND ROLLERS

Ref	Part Number	Description	Qty	Serial Number
1	**335637**	**KIT – ROLLER SERVICE** [306]	**1**	
2	**347565**	**KIT – FM100 DRIVE COVER** [307]		
3	**347487**	**HOUSING – FL206 AND BEARING** [308]	**1**	
4	**347339**	**COVER – DRIVE ROLLER FM100**	**2**	
5	245122	MOTOR – HYD [309]	1	
	245316	SEAL KIT		
	304748	**KIT – FEED DRAPER MOTOR SHIM**	**A/R**	
6	304454	DRAPER – 1988 MM (78.3 IN.) W X 1712 MM LG	1	
7	130283	STRAP – DRAPER CONN	28	
8	**335173**	**SUPPORT – IDLER ADJ WELDT LH**	**1**	
	335171	**SUPPORT – IDLER ADJ WELDT RH**	**1**	
9	213734	RETAINER – SPRING	2	
10	287587	SPRING – COMPRESSION	2	
11	231647	ROLLER – IDLER WELDT	1	
12	287885	HOUSING – LH IDLER CUP ASSY	1	
	287883	HOUSING – RH IDLER CUP ASSY	1	
13	NSS	HOUSING – MACH IDLER CUP LH	1	
	NSS	HOUSING – MACH IDLER CUP RH	1	
14	118185	BEARING – BALL CYL, 52 MM O.D., 25 MM I.D.	2	
15	100862	SEAL – OIL	4	
16	118011	RING – RETAINING INTERNAL	2	
17	21301	FITTING – LUBRICATION	2	
18	133372	CAP – DUST	2	
A	136248	BOLT – RHSSN TFL M10 X 1.5 X 35-8.8-A3L		
B	135799	NUT – HEX FLG CTR LOC M10 X 1.5-10-A3L		
C	252701	BOLT – RHSSN TFL M10 X 1.5 X 60-8.8-A3L		
D	135630	SCREW – BHRN #12-24 NC X 0.920 IN. LG (50 PACK)		
E	135626	NUT – CSK CENTER LOCK #12-24 NC (50 PACK)		
F	184655	BOLT – HEX HD M8 X 1.25 X 55-8.8-A2L		
G	135337	NUT – HEX FLG CTR LOC M8 X 1.25-8-A2L		
H	135319	BOLT – HEX HD M10 X 1.5 X 40-8.8-A3L		
J	252272	BOLT – HEX HD TFL M12 X 1.75 X 180		
K	184694	NUT – HEX M12 X 1.75-8-A3L		

306. Kit includes drive roller and two drive roller covers (MD #347339). Roller alignment must be checked and feed draper motor shim kit (MD #304748) installed if required.
307. Kit includes two covers (MD #347339), cam latch washer (MD #273304), and FL206 housing and bearing (MD #347487).
308. Housing (MD 347487) will not work without covers (MD #347339) and cam latch washer (MD #273304). If replacing superseded bearing housing (MD #335178), order FM100 Drive Cover kit (MD #347565).
309. Roller alignment must be checked and feed draper motor shim kit (MD #304748) installed if required. Misalignment of the feed draper drive motor and drive roller causes stress in the motor shaft and roller bore, leading to premature wear and failure. The kit provides the required shims when replacing a failed feed draper drive motor or driver roller, or to correct misalignment between the drive motor and drive roller. See instruction MD #215035 for installation. Includes eight 0.6 mm shims (NSS), eight 0.4 mm shims (NSS), 4 flange nuts (MD #21452), and 4 hex nuts (MD #135927).

FEED DECK – DRAPER DRIVE AND ROLLERS

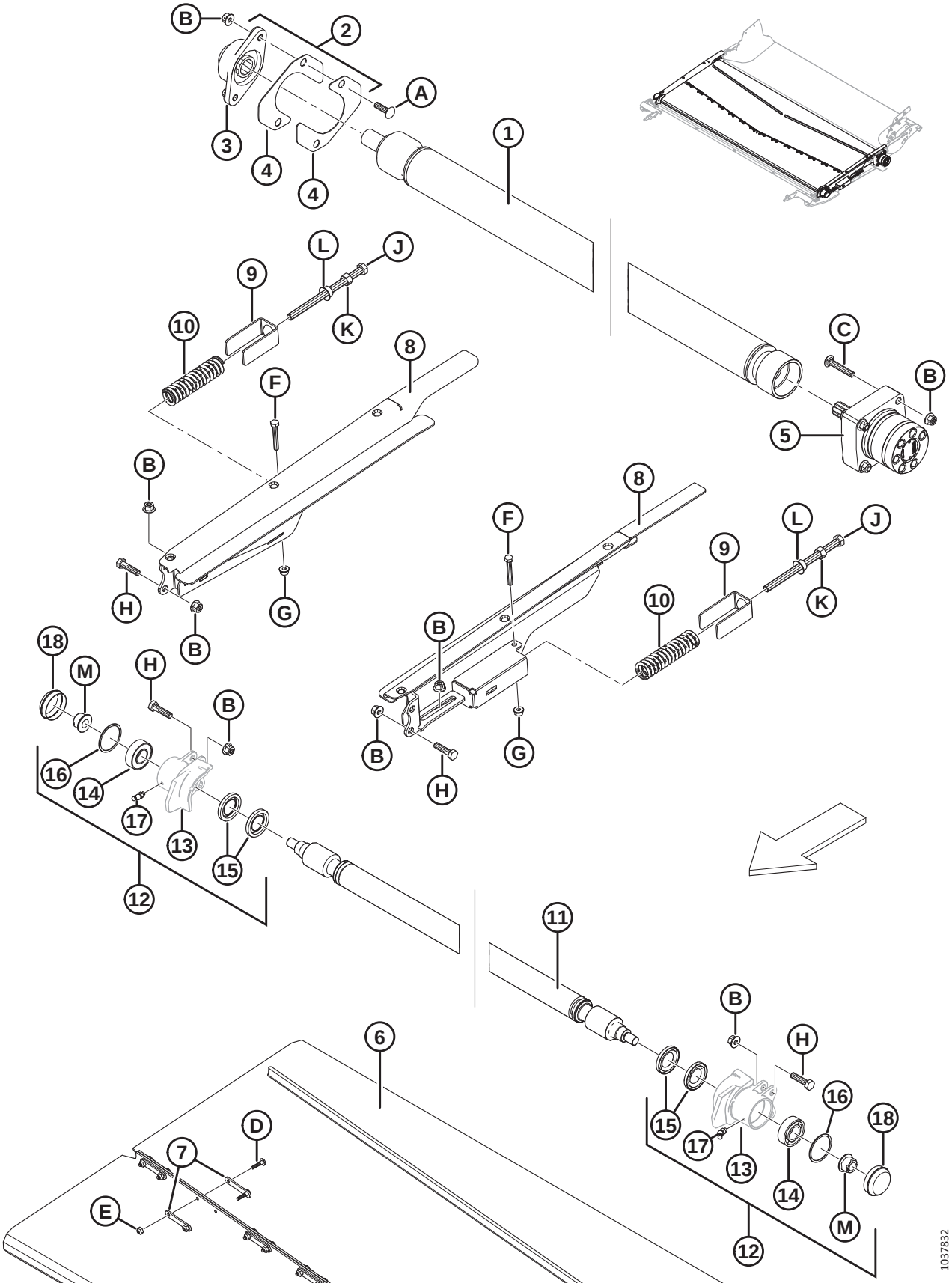

Ref	Part Number	Description	Qty	Serial Number
L	136036	NUT – HEX SMTH FLG M12 X 1.75-8-A3L		
M	152520	NUT – HEX FLG TECH LOC M16 X 2-10-A3L		

87 Feed Deck – Pans and Fillers

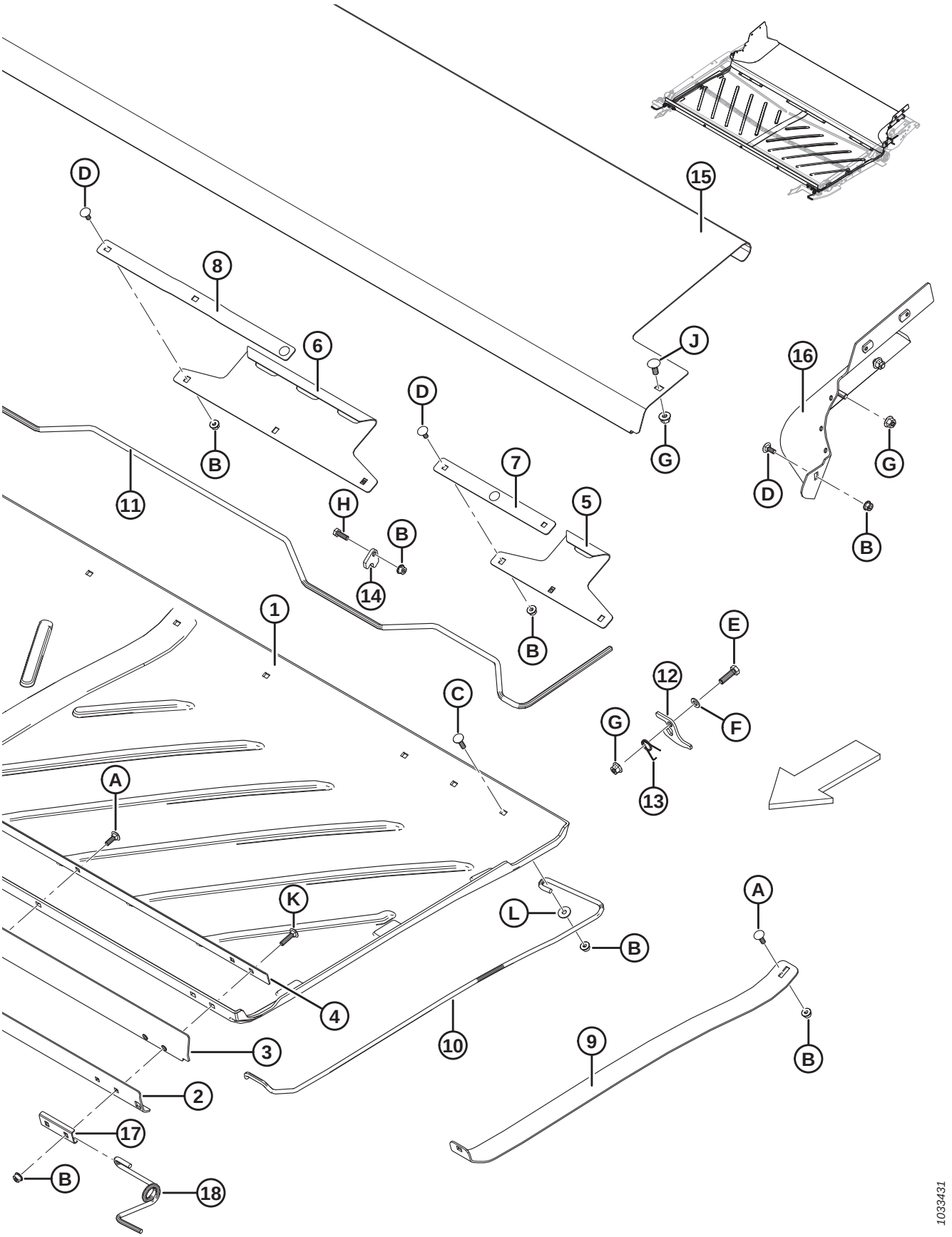

FEED DECK – PANS AND FILLERS

Ref	Part Number	Description	Qty	Serial Number
1	287768	PAN – FEED DECK POLYETHYLENE	1	
2	295211	PLATE – FRONT BAR OUTER	1	
3	295212	FLAP – PAN FRONT	1	
4	295213	PLATE – FRONT BAR INNER	1	
5	240013	HOOK – REAR SIDE	2	
6	240012	HOOK – REAR CENTER	1	
7	231765	BAR – SIDE HOOK	2	
8	231766	BAR – HOOK CENTER	1	
9	304382	SUPPORT – PAN LIFTER	1	
10	295215	SUPPORT – PAN SPRING LH	1	
	295216	SUPPORT – PAN SPRING RH	1	
11	240010	HANDLE – PAN LATCH	1	
12	240254	SUPPORT – PAN HANDLE LATCH	2	
13	159020	SPRING – TORSION LH	1	
	144505	SPRING – TORSION RH	1	
14	248914	GUIDE – HANDLE LOCK	6	
15	240264	PAN – FEED DECK STAINLESS	1	
16	304927	FILLER – RH REAR CORNER WELDT	1	
	304926	FILLER – LH REAR CORNER WELDT	1	
17	287939	RETAINER – FRONT SPRING	2	
18	**347691**	**SUPPORT – PAN FRONT SPRING RH**	**1**	
	347692	**SUPPORT – PAN FRONT SPRING LH**	**1**	
A	184648	BOLT – RHSN M8 X 1.25 X 25-8.8-A3L		
B	135337	NUT – HEX FLG CTR LOC M8 X 1.25-8-A2L		
C	190752	BOLT – RHSN M8 X 1.25 X 30-8.8-A2L		
D	197171	BOLT – RHSN M8 X 1.25 X 20-8.8-A2L		
E	30628	BOLT – HEX HD M10 X 1.5 X 35-8.8-A3L		
F	184711	WASHER – FLAT REG M10-200HV-A3L		
G	135799	NUT – HEX FLG CTR LOC M10 X 1.5-10-A3L		
H	184652	BOLT – HEX HD TFL M8 X 1.25 X 25-8.8-A2L		
J	135785	BOLT – RHSN M10 X 1.5 X 25-8.8-A3L		
K	136050	BOLT – RHSN M8 X 1.25 X 35-8.8-A2L		
L	184709	WASHER – FLAT LARGE M8-200HV-A2L		

88 Float Module – Attaching Parts

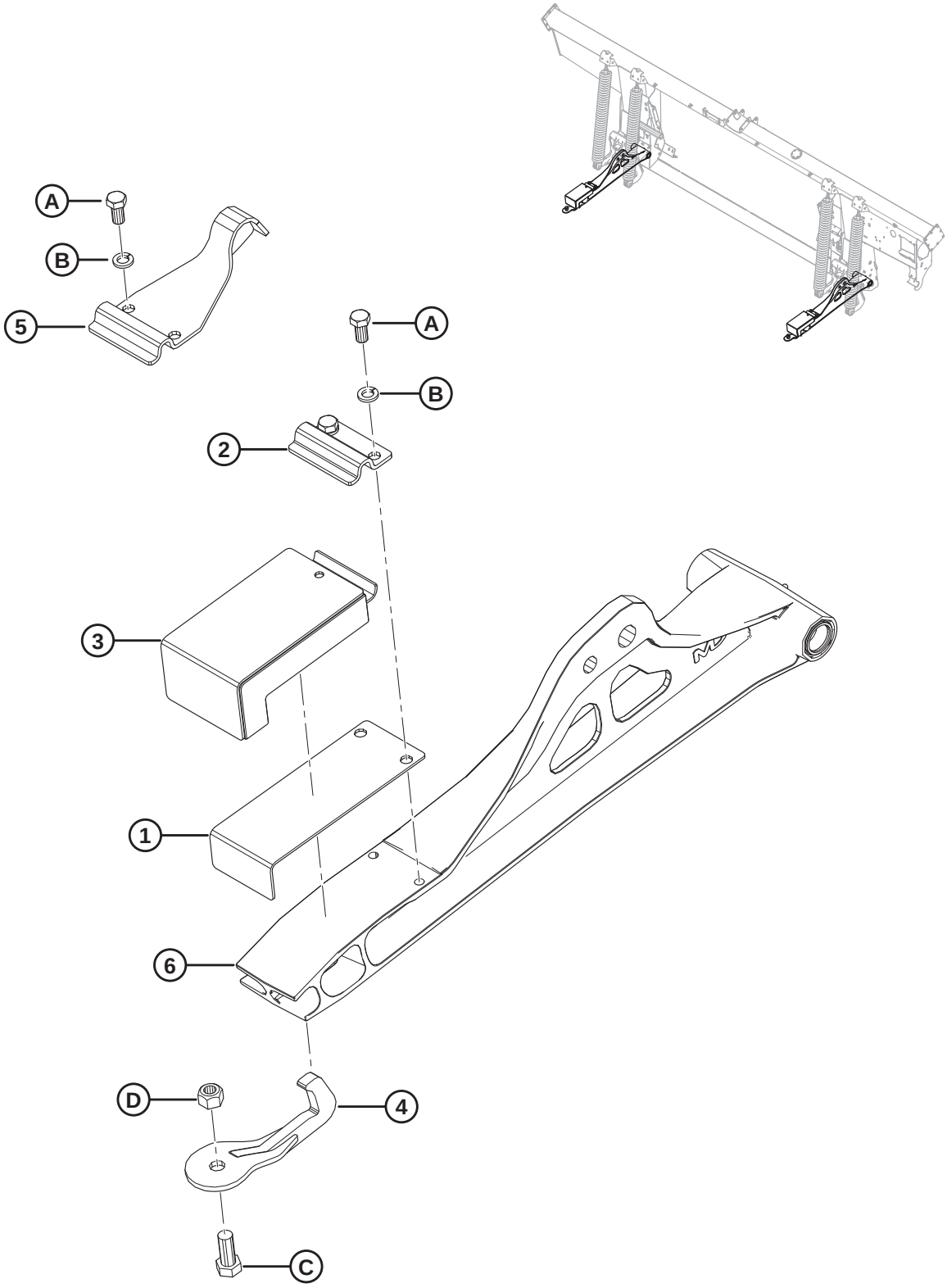

1037885

FLOAT MODULE – ATTACHING PARTS

Ref	Part Number	Description	Qty	Serial Number
	B6458	KIT – COMBINE ATTACHING FLEX [310]		
1	125145	PLATE – LEAF SPRING	2	
2	125146	CLAMP	2	
3	174769	ASSY – RUBBER BLOCK FLEX [311]	2	
4	**258876**	**WELDMENT – BREAKAWAY HOOK**	**2**	
5	**304799**	**STOP – FLAT TILT FLOAT WELDMENT (FD125 ONLY)** [312]	**2**	
6	REF	LINK – LOWER, C/W BEARINGS [313]		
A	21575	BOLT – HH 1/2 NC X 1.0 LG GR 5 ZP		
B	18638	WASHER – REG. LOCK 1/2 IN. NOM. I.D. ZP		
C	21594	BOLT – HEX HD 0.625-11 UNC X 1.50		
D	18666	NUT – HEX LOCK DT 5/8-11 UNC ZP		

310. Includes all listed parts from this section as well as Sections *89 Float Module – Center and Corner Fillers, page 259* and *90 Float Module – Side Fillers, page 261*. Kits available through Whole Goods only.
311. Used on all FD1 headers except for FD125.
312. Used on FD125 headers only.
313. Refer to Section *111 Float Linkage and Components, page 323*.

89 Float Module – Center and Corner Fillers

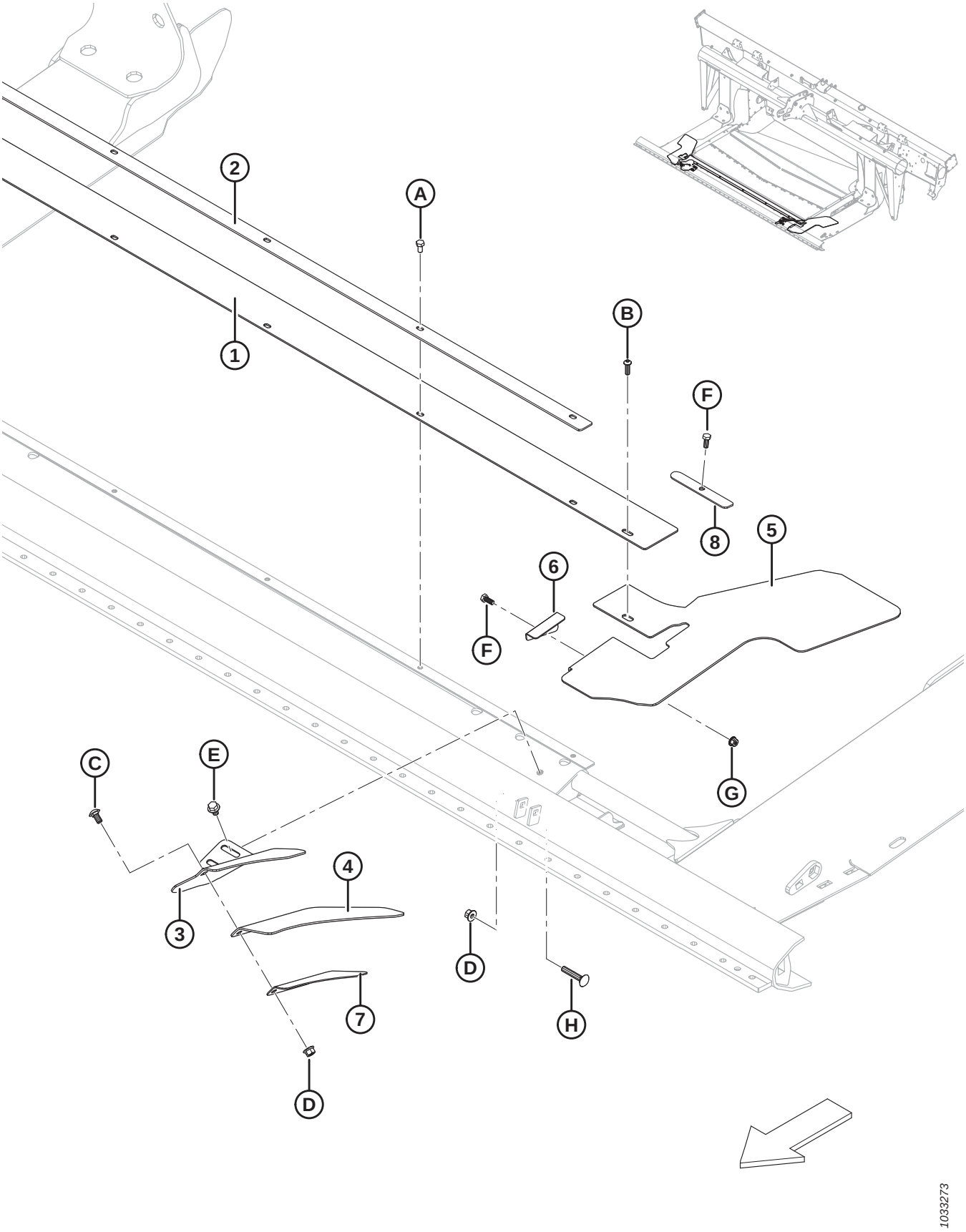

FLOAT MODULE – CENTER AND CORNER FILLERS

Ref	Part Number	Description	Qty	Serial Number
	B6450	KIT – EXTENDED CENTER FILLER [314]		
1	295261	FILLER – PAN CENTER (93 MM)	1	
	295542	FILLER – PAN CENTER, EXTENDED (167 MM) [315]	1	
2	301126	RETAINER – CENTER FILLER	1	
3	231799	SUPPORT – LH CORNER FILLER	1	
	231800	SUPPORT – RH CORNER FILLER	1	
4	304040	FLAP – CORNER FILLER	2	
5	287774	FLAP – LH PAN CORNER FLEX	1	
	287773	FLAP – RH PAN CORNER FLEX	1	
6	276117	RETAINER – PAN FLAP LH	1	
	276062	RETAINER – PAN FLAP RH	1	
7	213340	RETAINER – CORNER FILLER LH	1	
	240418	RETAINER – CORNER FILLER RH	1	
8	301127	PLATE – FILLER RETAINER	2	
A	50139	BOLT – HEX HD TFL M8 X 1.25 X 16-8.8-A2L		
B	184649	SCREW – HEX SOC BTN HD M8 X 1.25 X 25-12.9-A2L		
C	184657	BOLT – RHSSN M10 X 1.5 X 20-8.8-A3L		
D	135799	NUT – HEX FLG CTR LOC M10 X 1.5-10-A3L		
E	136231	BOLT – HEX SER FLG HD M10 X 1.5 X 16-8.8-A3L		
F	30715	BOLT – HEX HD TFL M8 X 1.25 X 20-8.8-A2L		
G	135337	NUT – HEX FLG CTR LOC M8 X 1.25-8-A2L		
H	136113	BOLT – RHSN M10 X 1.5 X 60-8.8-A3L		

314. Includes extended pan center filler (MD #295542) and installation instructions. Kits available through Whole Goods only.
315. Longer center filler pan required in certain conditions (e.g. soybean).

90 Float Module – Side Fillers

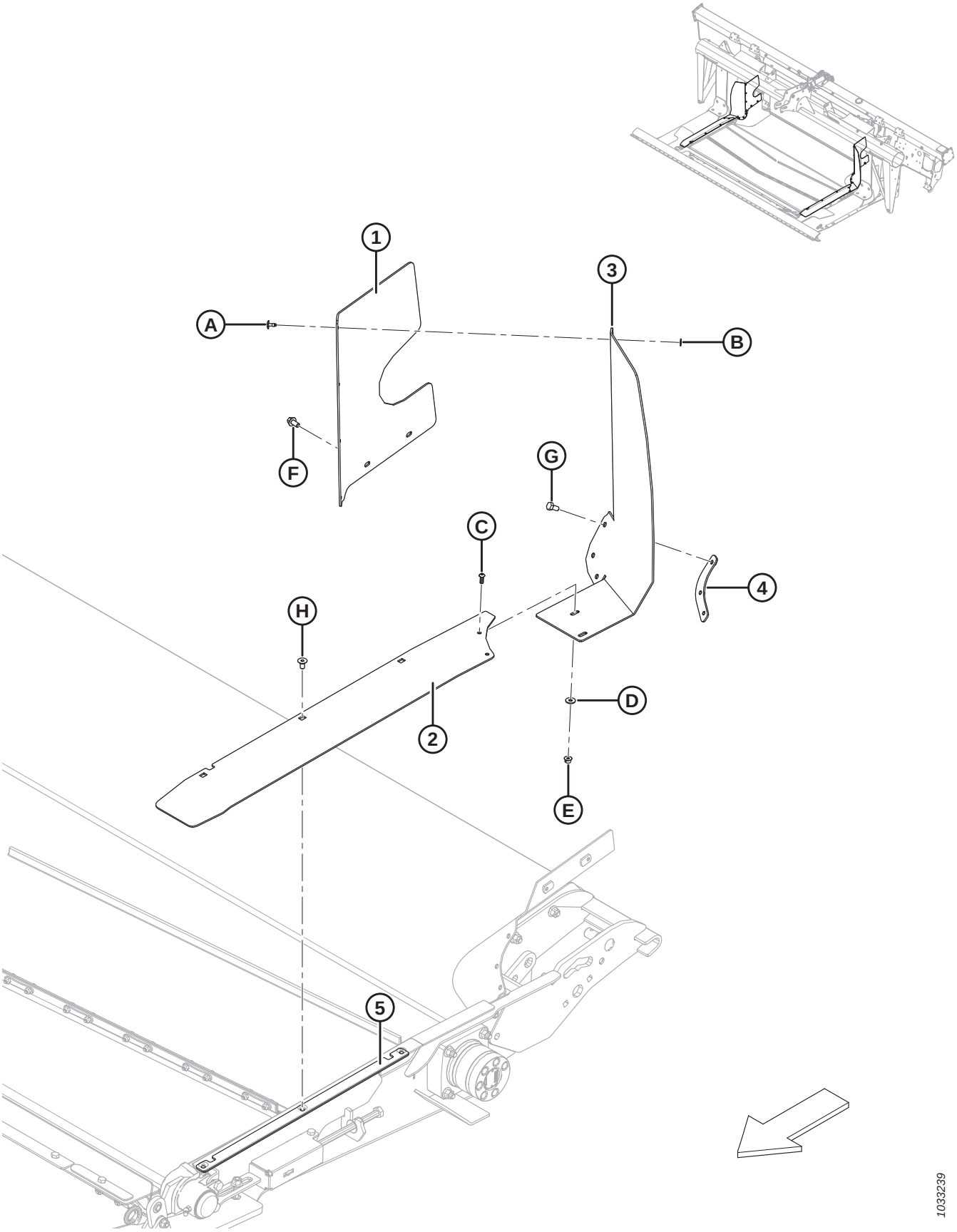

FLOAT MODULE – SIDE FILLERS

Ref	Part Number	Description	Qty	Serial Number
1	213492	FILLER – LH REAR UPPER	1	
	213493	FILLER – RH REAR UPPER	1	
2	304159	FILLER – DECK SIDE LH FLEX	1	
	304158	FILLER – DECK SIDE RH FLEX	1	
3	213759	FLAP – FEED DECK LH SIDE FLEX	1	
	213753	FLAP – FEED DECK RH SIDE FLEX	1	
4	304779	PLATE – FLAP RETAINER LH	1	
	304775	PLATE – FLAP RETAINER RH	1	
5	304786	PLATE – SIDE FILLER RETAINER	2	
A	293053	RIVET – POP		
B	293054	WASHER – FLAT LARGE M5-200HV-AA1J		
C	136886	SCREW – HEX SOC M6 X 1 X 16-10.9-ZB		
D	184706	WASHER – FLAT LARGE M6-200HV-A2L		
E	152668	NUT – HEX FLG CTR LOC M6 X 1-8-A2L		
F	136485	BOLT – HEX FLG HD TFL M8 X 1.25 X 16-8.8-A3L		
G	50139	BOLT – HEX HD TFL M8 X 1.25 X 16-8.8-A2L		
H	252542	SCREW – HEX SOC CSK HD TFL M8 X 1.25 X 16-10.9-AA2L		

91 Auger Assembly and Completion

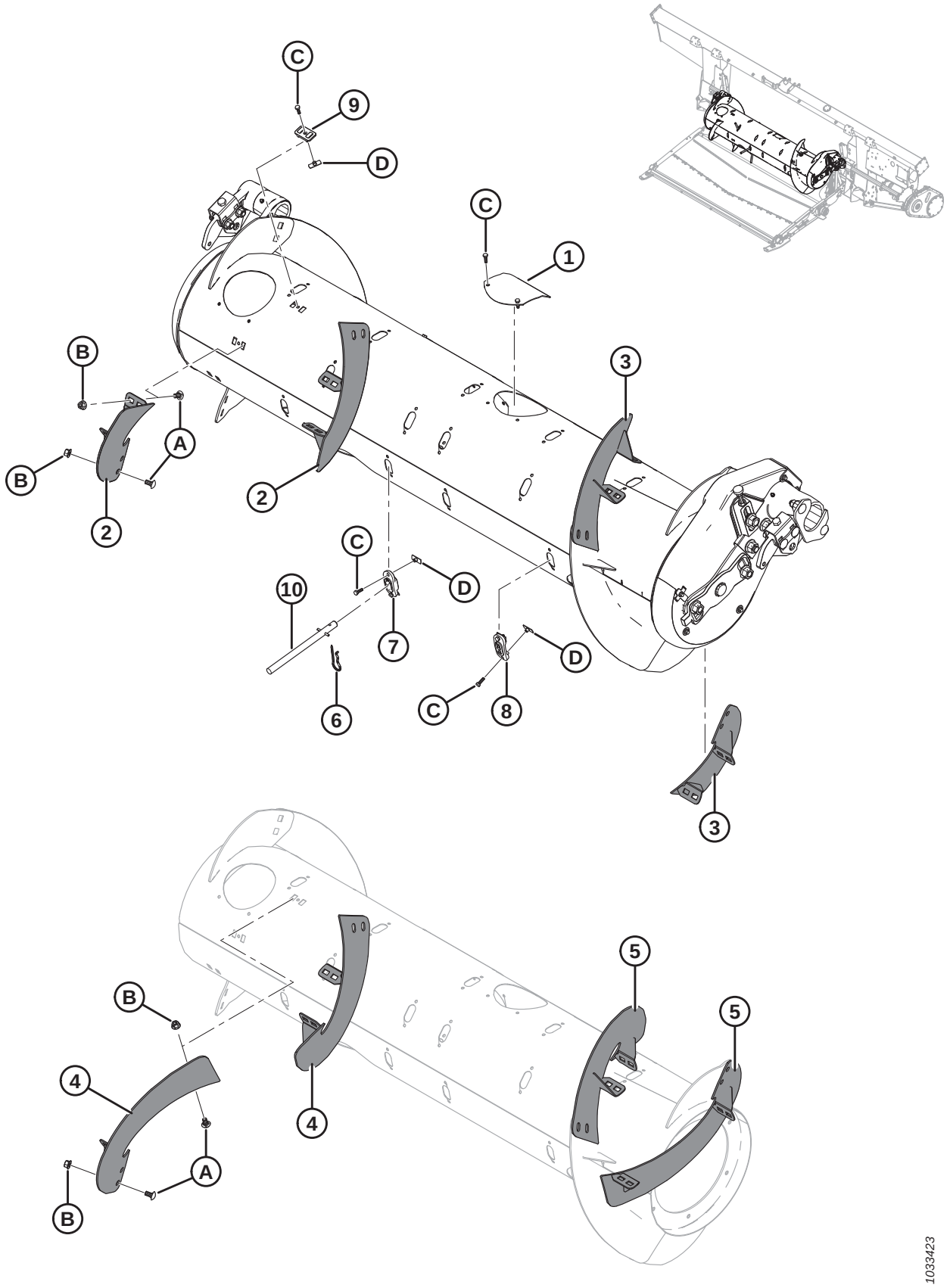

AUGER ASSEMBLY AND COMPLETION

Ref	Part Number	Description	Qty 335244/335245/308871	Serial Number
	335242	AUGER DRIVE ASSEMBLY WITH MAGNETIC SHIELD (BASE ONLY) [316]		
	335244	KIT – COMPLETION, MEDIUM AUGER [317]	1/0/0	
	335245	KIT – COMPLETION, WIDE AUGER [317]	0/1/0	
	308871	KIT – COMPLETION, NARROW AUGER [317]	0/0/1	
1	304494	COVER WELDMENT	6/6/6	
2	287887	FLIGHTING, RTD – RH, MED (HIWEAR)	2/1/0	
3	287888	FLIGHTING, RTD – LH, MED (HIWEAR)	2/1/0	
4	287890	FLIGHTING, RTD – RH, LONG (HIWEAR)	0/0/2	
5	287889	FLIGHTING, RTD – LH, LONG (HIWEAR)	0/0/2	
6	123180	PIN – HAIR	4/12/0	
7	337143	GUIDE	4/12/0	
8	187137	PLUG	8/0/12	
9	213084	PLUG – FLIGHTING SLOT	4/8/4	
10	337152	KIT – FINGER [318]	4/12/0	
	7642	PIN – SPRING 3/16 DIA X 1.5 LG		
A	184657	BOLT – RHSSN M10 X 1.5 X 20-8.8-A3L		
B	135799	NUT – HEX FLG CTR LOC M10 X 1.5-10-A3L		
C	252703	BOLT – HEX HD TFL M6 X 1 X 20 X SPCL-12.9-A2L		
D	197263	NUT – TEE M6 X 1		

316. Includes all listed parts in Section *93 Auger Internal Components, page 267*, and Section *94 Auger Assembly – Service Parts, page 269*. Auger drive assembly (MD #335242) is a base configuration **ONLY** and contains parts common to medium, wide, and narrow augers. Completion kits (MD #335244, 335245, or 308871) are optional as a repair and are required only if flighting components are damaged. To replace the entire auger assembly (including flighting components) for your specific combine, refer to Table *92.1, page 266* in Section *92 Auger Assembly and Completion – Configuration, page 265* to determine which combination of base auger drive assembly (MD #335242) and completion kits (MD #335244, 335245, or 308871) is required.
317. Includes all listed parts and hardware. See parts list for quantities specific to completion kit.
318. Includes solid finger (not sold separately), spring pin (MD #7642), guide (MD #337143), and instructions.

92 Auger Assembly and Completion – Configuration

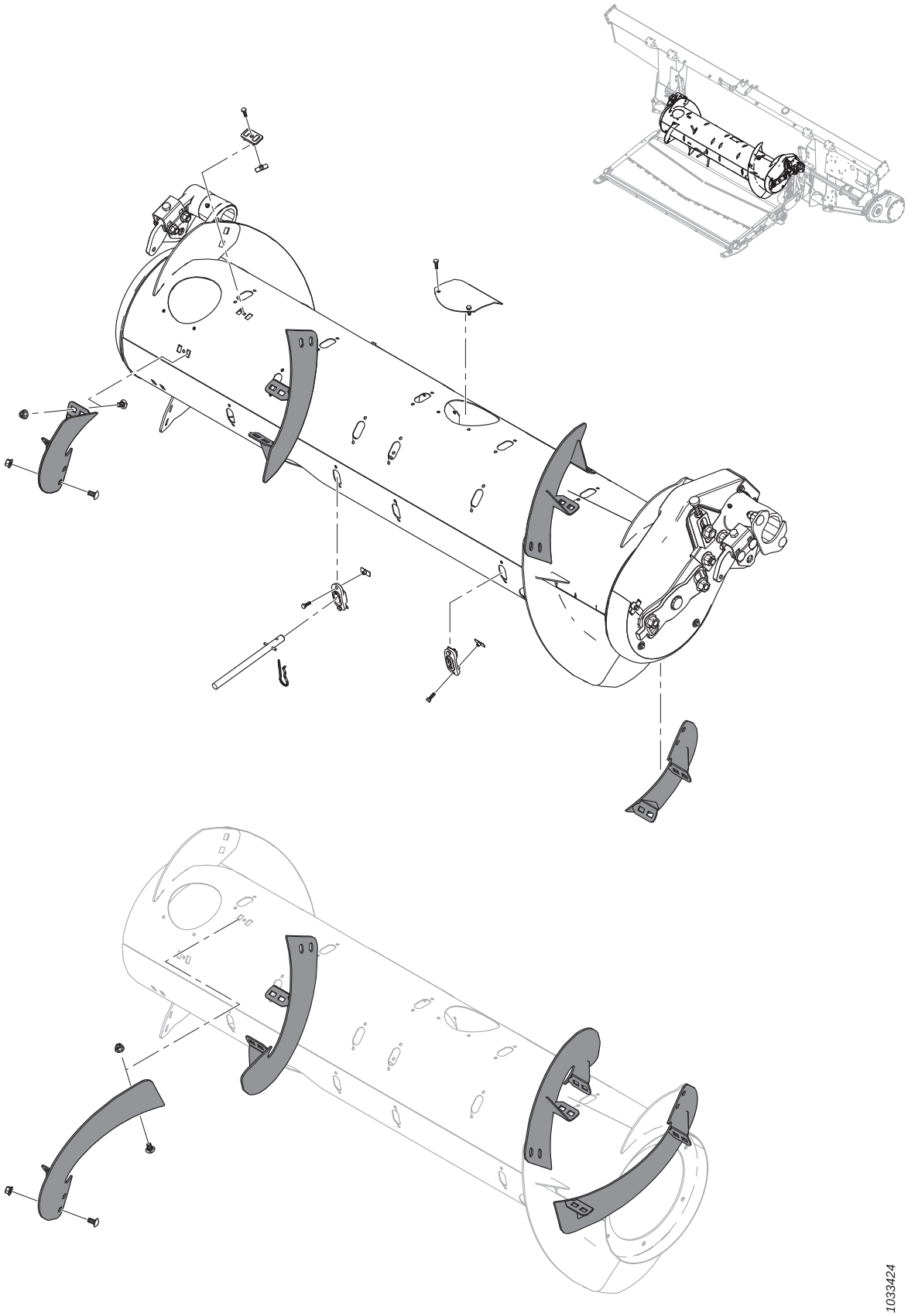

Table 92.1 Configuration Chart

NOTE:

Auger drive assembly (MD #335242) is a base configuration **ONLY** and contains parts common to medium, wide, and narrow augers. Completion kits (MD #335244, 335245, or 308871) are optional as a repair and are required only if flighting components are damaged. To replace the entire auger assembly (including flighting components) for your specific combine, refer to the table below to determine which combination of base auger drive assembly (MD #335242) and completion kits (MD #335244, 335245, or 308871) is required. For completion kits service parts, refer to Section *91 Auger Assembly and Completion, page 263*.

NOTE:

For combines where completion kit (MD #335245) is available as an option, completion kit (MD #335244) is recommended for most crop conditions but completion kit (MD #335245) may increase combine capacity on wide feeder house combines in high volume crop conditions.

Combine Model	Kit MD # 335242	Kit MD # 335244	Kit MD # 335245	Kit MD # 308871
CASE IH 5/6/7088, 7/8010, 7/8/9120, 5/6/7130, 7/8/9230, 5/6/7140, 7/8/9240	1	1	—	—
NEW HOLLAND CR 970/980, 9070/9080, 8090/9090, X.90, X.80	1	1	—	—
NEW HOLLAND CR 920/940/960, 9020/40/60/65, 6090/7090, 8060/8070/8080	1	—	—	1
NEW HOLLAND CX 8X0, 80X0, 8.X0	1	1	OPT	—
JOHN DEERE 95/96/97/9860, 95/96/9870, S65/66/67/68/690	1	1	—	—
JOHN DEERE T670	1	1	OPT	—
CLAAS 590R/595R, 660/670, 760/770/780	1	1	OPT	—
CLAAS 56/57/580R, 57/585R, 62/63/64/650, 73/74/750	1	1	—	—
AGCO CHALLENGER 660B	1	1	—	—
AGCO CHALLENGER 67/680B, 54/560C, 54/560E	1	1	OPT	—
AGCO MASSEY FERGUSON 96/9795, 9520	1	1	—	—
AGCO MASSEY FERGUSON 9895, 9540, 9560, 9545, 9565, 9380	1	1	OPT	—
AGCO GLEANER R6/75, R6/76, S6/77, S6/7/88, S96/7/8	1	—	—	1
AGCO IDEAL™ 7/8/9	1	OPT	—	1
VERSATILE RT490	1	1	—	—

93 Auger Internal Components

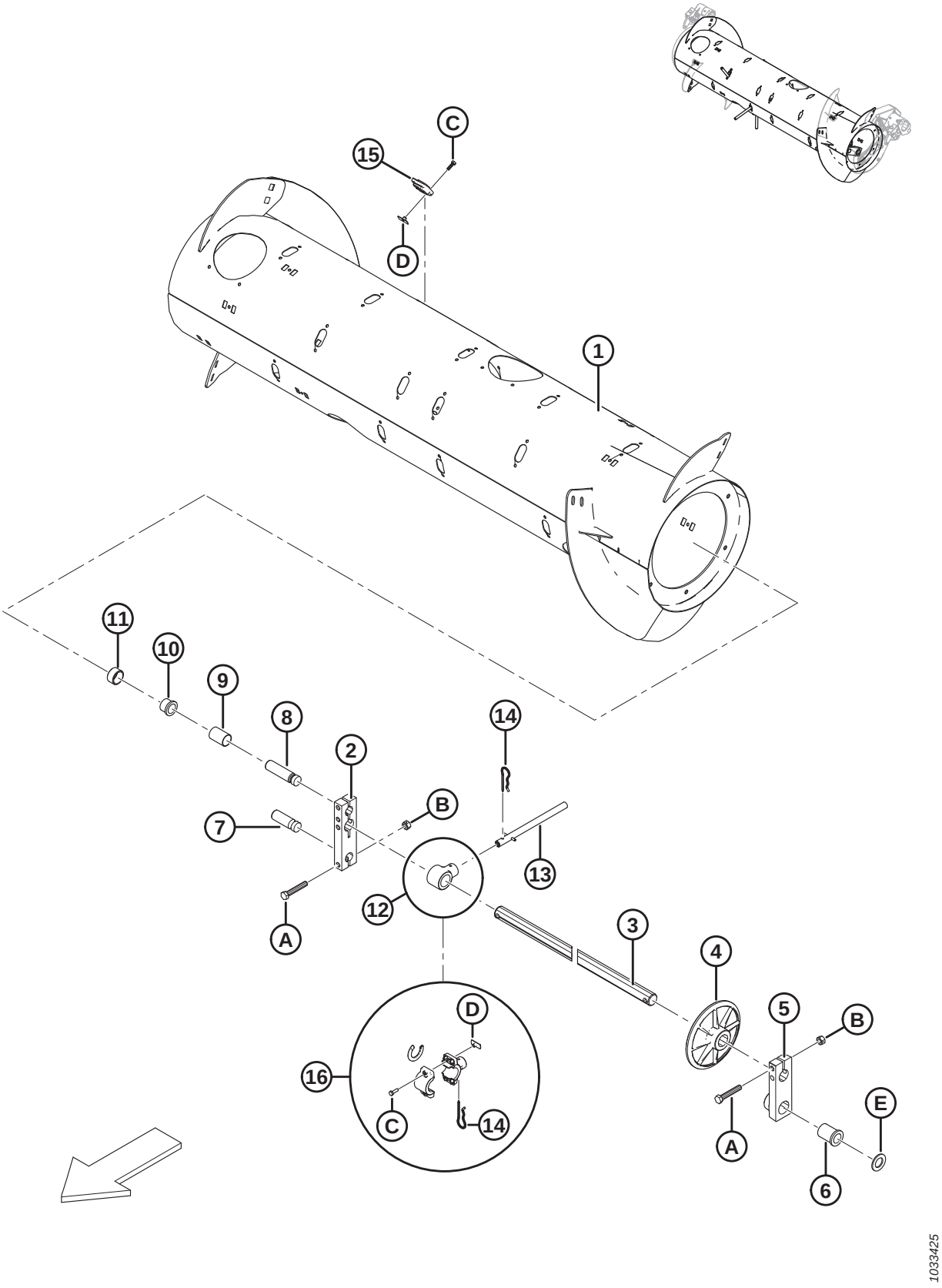

AUGER INTERNAL COMPONENTS

Ref	Part Number	Description	Qty	Serial Number
	335242	ASSY – AUGER DRIVE WITH MAGNETIC SHIELD, PARTS ONLY [319]		
1	308642	DRUM – 14 IN. WELDMENT	1	
2	213608	BLOCK – AUGER SHAFT	1	
3	213605	SHAFT – FINGER	1	
4	248117	WHEEL – GUIDE, FINGER SHAFT	1	
5	248538	CASTING – PIVOT BLOCK, LH, MACHINING	1	
6	248145	BUSHING – FLANGE	1	
7	248096	PIN – PIVOT	1	
8	213660	PIN – PIVOT	1	
9	213657	SPACER	1	
10	133877	BUSHING – PLASTIC FLANGED 1.0 IN.	1	
11	213656	ROLLER	1	
12	337206	HOLDER – AUGER FINGER (2021 AND LATER) [320]	32	396190–
	276265	HOLDER – AUGER FINGER (2020 AND PRIOR) [321]	32	–396189
13	337152	KIT – FINGER [322]	18	
	7642	PIN – SPRING 3/16 DIA X 1.5 LG	A/R	
14	123180	PIN – HAIR	18	
15	337143	GUIDE	18	
16	276839	KIT – FINGER HOLDER SPLIT 5X (BAG OF 5) [323]	32	
A	184675	BOLT – HEX HD M12 X 1.75 X 70-8.8-A3L		
B	136759	NUT – HEX CTR LOC M12 X 1.75-8-A3L		
C	252703	BOLT – HEX HD TFL M6 X 1 X 20 X SPCL-12.9-A2L		
D	197263	NUT – TEE M6 X 1		
E	156743	WASHER – FLAT [324]		

319. Includes all parts listed in Section *93 Auger Internal Components, page 267* and Section *94 Auger Assembly – Service Parts, page 269*. Auger drive assembly (MD #335242) is a base configuration **ONLY** and contains parts common to medium, wide, and narrow augers. Completion kits (MD #335244, 335245, or 308871) are optional as a repair and are required only if flighting components are damaged. To replace the entire auger assembly (including flighting components) for your specific combine, refer to Section *91 Auger Assembly and Completion, page 263*
320. For model year 2021 and later.
321. For model year 2020 and prior.
322. Includes solid finger (not sold separately), spring pin (MD #7642), guide (MD #337143), and instructions.
323. Used to simplify field replacement of broken one-piece solid finger holders (MD #337206). Includes split auger finger holder (NSS), holder spacers (NSS), hair pin (MD #123180), tee nut (MD #197263), and bolt (MD #252703).
324. Washer (MD #156743) is used if tolerance on bushing (MD #248145) is exceeded. Use washer(s) as required to achieve correct tolerance.

94 Auger Assembly – Service Parts

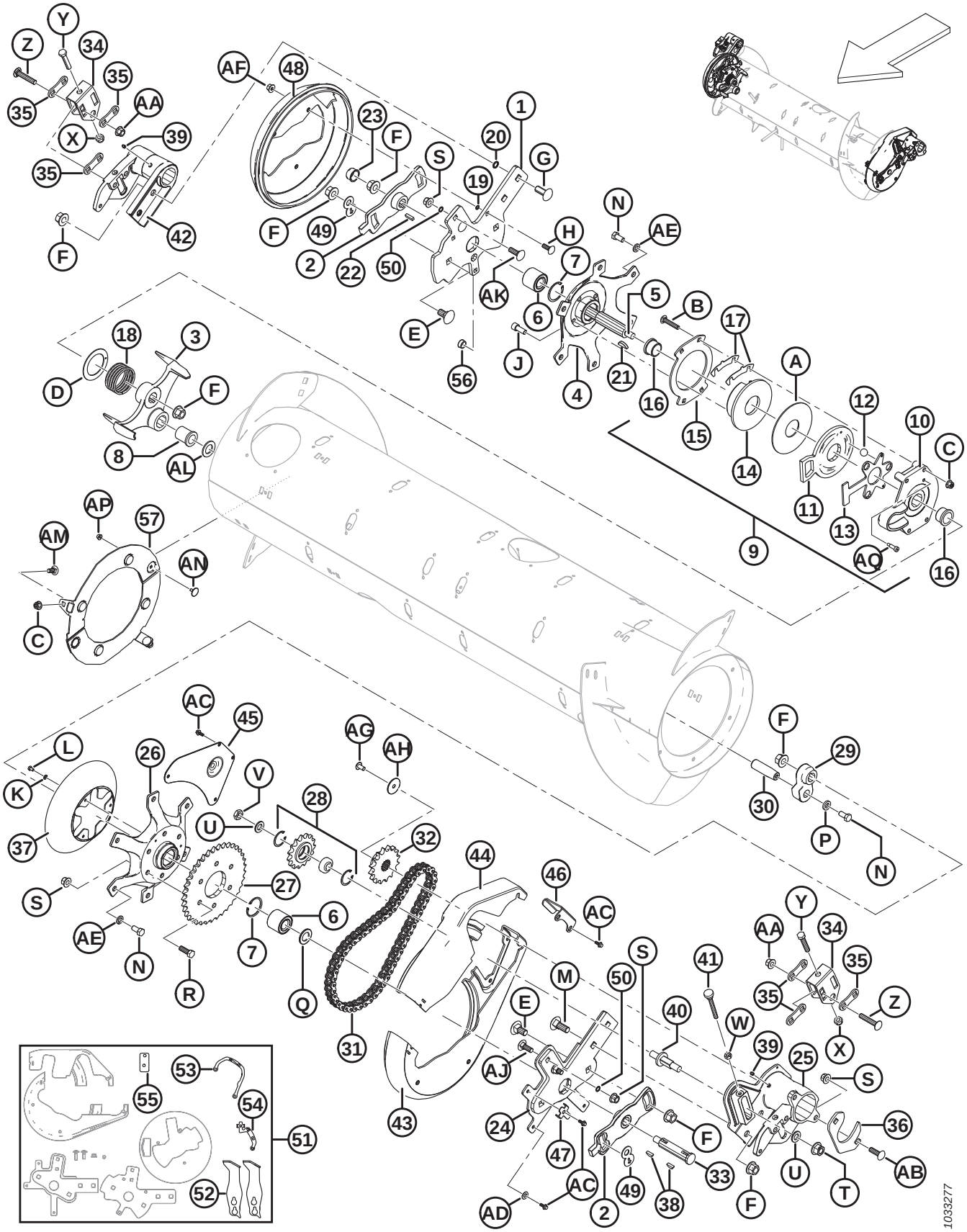

AUGER ASSEMBLY – SERVICE PARTS

Ref	Part Number	Description	Qty	Serial Number
	335242	ASSY – AUGER DRIVE WITH MAGNETIC SHIELD, PARTS ONLY [325]		
	B6600	KIT – FM100 RTD UP-STOP BUMPER KIT [326]		
1	308134	KIT – SERVICE, AUGER ARM, RH (2017 AND PRIOR) [327]	1	–321189
	308850	BAR – RH AUGER SUPPORT (2018 AND LATER)	1	321190–
2	213851	CASTING – TIMING PLATE, MACHINED	2	
3	304520	CASTING – STOP, MACHINING [328]	1	
4	213546	HUB – MACHINING RH	1	
5	304514	SHAFT – AUGER	1	
6	132607	BEARING – DOUBLE ROW BALL 52 OD X 25 BORE	2	
7	21235	RING – INT RETAINING	2	
8	213659	BUSHING – FLANGE	1	
9	213802	ASSEMBLY – REVERSING CLUTCH [329]	1	
10	213649	CLUTCH HOUSING – CAST, MACH	1	
11	213801	ARM – CLUTCH ACTIVATOR, MACH	1	
12	248285	BALL	3	
13	213557	PLATE – BALL CAGE	1	
14	213552	DISC – BRAKE, MACHINING	1	
15	213554	DISC – CLUTCH	1	
16	213859	BUSHING – PLASTIC (1 X 1.5 X 1.0 WITH FLANGE)	2	
17	276206	SHIM – CLUTCH	6	
18	213679	SPRING – COMPRESSION	1	
19	183506	O-RING – HNBR (GREEN)	3	
20	50083	O-RING	2	
21	213654	KEY – WOODRUFF (1/4 X 1-1/4 NOM.)	1	
22	213750	KEY – RECT. 6.35 MM SQ 24 MM LG	1	

325. Includes all parts listed in Section *93 Auger Internal Components, page 267*, and Section *94 Auger Assembly – Service Parts, page 269*. Auger drive assembly (MD #335242) is a base configuration **ONLY** and contains parts common to medium, wide, and narrow augers. Completion kits (MD #335244, 335245, or 308871) are optional as a repair and are required only if flighting components are damaged. To replace the entire auger assembly (including flighting components) for your specific combine, refer to Section *91 Auger Assembly and Completion, page 263*.
326. Kit includes two bumpers (MD #301912), RH indicator plate (MD #276180, LH indicator plate (MD #276183), spacer plate (MD #308056), and instructions. For units made in model year 2017 and prior, order RTD Bumper Conversion kit (MD #308187). Kits available through Whole Goods only.
327. Kit includes RH auger support bar (MD #308850), RH auger end cap cover (MD #301994), two O-rings (MD #183508), and hardware (MD #135900, 136431). If your machine is model year 2017 and prior and kit MD #308187 (bumpers and indicator plates) has been installed, order RH auger support bar (MD #308850). If kit is not installed, order RH auger arm service kit (MD #308134).
328. Stop casting arm (MD #304520) and finger shaft crank arm (MD #304521) must be replaced in pairs if replacing either arm for machines made in model year 2019 and prior.
329. Includes housing (MD #213649), arm (MD #213801), ball cage (MD #213557), discs (MD #213552, 213554), two bushings (MD #213859), three balls (MD #248285), six shims (MD #276206), plastic washer (MD #213731), and hardware.

AUGER ASSEMBLY – SERVICE PARTS

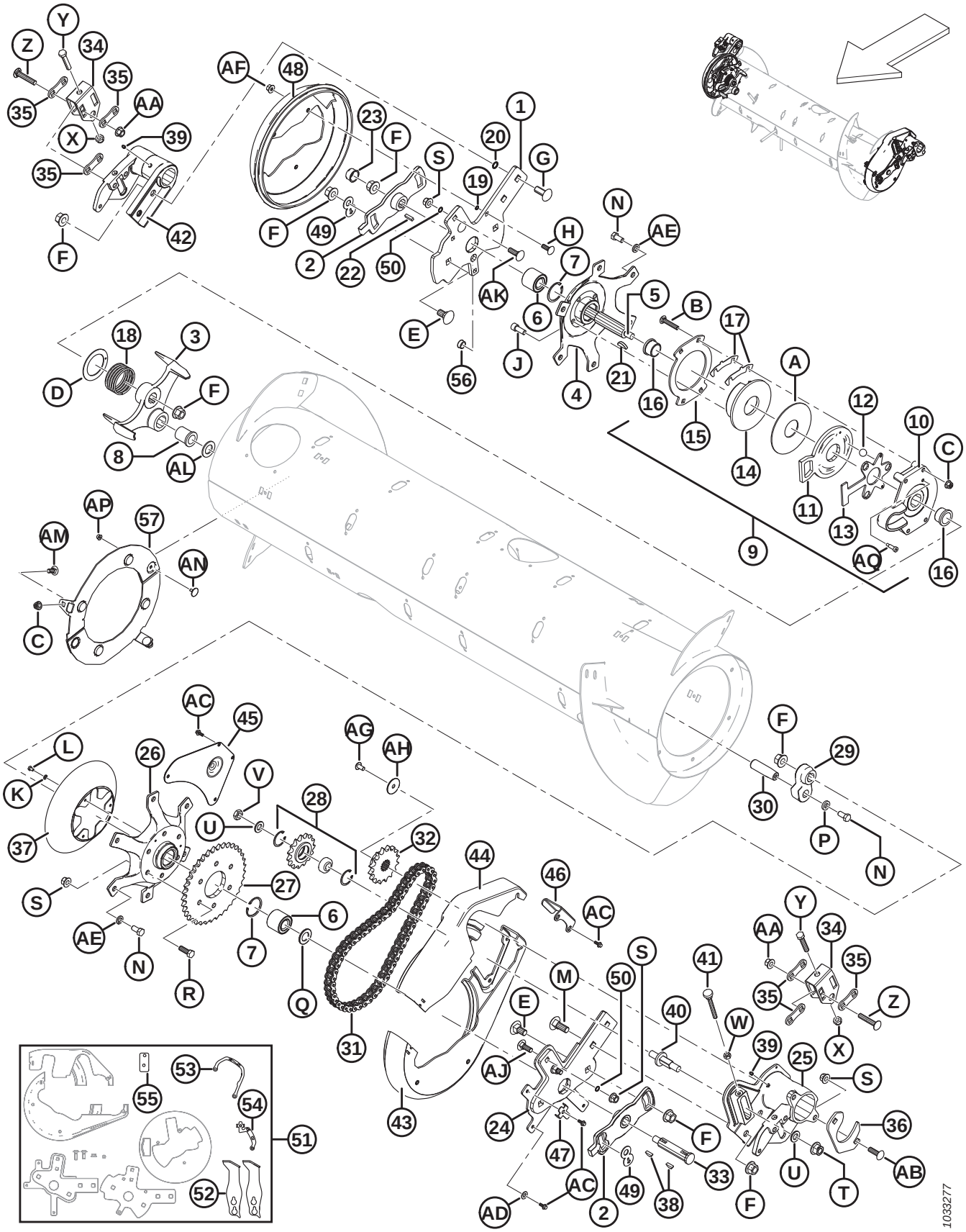

AUGER ASSEMBLY – SERVICE PARTS

Ref	Part Number	Description	Qty	Serial Number
23	276140	CAP – PLASTIC	1	
24	308133	KIT – SERVICE, AUGER ARM, LH (2017 AND PRIOR) [330]	1	–321189
	304931	ARM – LH AUGER SUPPORT WELDT (2018 AND LATER)	1	321190–
25	276258	PIVOT – LH MACHINING, AUGER	1	
26	276141	HUB – MACHINING	1	
27	151793	SPROCKET – RC 60 A 37 T	1	
28	9333	ASSEMBLY – SPROCKET [331]	1	
	9213	BEARING – BALL	1	
	795	RING – RETAINING	2	
29	304521	ARM – FINGER SHAFT CRANK MACH [328]	1	
30	248144	PIN – PIVOT	1	
31	220317	CHAIN – RC-60H, 56 PITCHES RIVETED, ENDLESS	1	
32	151691	SPROCKET – RC 60 B 16 T	1	
33	301441	SHAFT – AUGER	1	
34	301810	BRACKET – ADJUSTER	2	
35	187428	SPACER	6	
36	248388	CLAMP – PLATE	1	
37	276118	SHIELD – CHAIN DRIVE	1	
38	135290	KEY – WOODRUFF (1/4 X 7/8 NOM.)	2	
39	18671	FITTING – LUBE 1/4-28 UNF	2	
40	213420	SPINDLE – THREADED ADJUSTMENT	1	
41	213857	THUMBSCREW – M10 X 80	1	
42	248232	PIVOT – RH MACHINING, AUGER	1	
43	301992	COVER – LH AUGER, LOWER HALF (2018 AND LATER)	1	321190–
	213097	COVER – LH AUGER, LOWER HALF (2017 AND PRIOR)	1	–321189
44	301993	COVER – LH AUGER, UPPER HALF (2018 AND LATER)	1	321190–
	213098	COVER – LH AUGER, UPPER HALF (2017 AND PRIOR)	1	–321189
45	213110	PANEL – ACCESS	1	
46	213112	PLATE – COVER RETAINER	1	
47	213153	BRACKET – CLAMP	1	
48	301994	COVER – AUGER END CAP RH	1	
49	301955	PLATE – LOCKOUT	2	
50	183508	O-RING – HNBR, COLOR GREEN	2	
51	308187	KIT – RTD BUMPER CONVERSION (2017 AND PRIOR) [332]	1	–321189
52	301912	BUMPER – WELDMENT FM100	2	
53	276180	PLATE – INDICATOR RH	1	

330. Kit includes LH auger support arm (MD #304931), LH auger large half cover (MD #301992), LH auger small half cover (MD #301993), two O-rings (MD #183508), and hardware (MD #136291, 136431). If your machine is model year 2017 and prior and kit MD #308187 (bumpers and indicator plates) has been installed, order LH auger support arm (MD #304931). If kit is not installed, order LH auger arm service kit (MD #308133).
331. Includes bearing (MD #9213) and two retaining rings (MD #795).
332. Kit includes two bumpers (MD #301912), LH auger support arm (MD #304931), RH auger support bar (MD #301987), LH auger small half cover (MD #301993), LH auger large half cover (MD #301992), RH auger end cap cover (MD #301994), four O-rings (MD #183508), LH and RH indicator plates (MD #276183 and 276180), spacer plate (MD #308056), and hardware (MD #136291, 136431, and 135900).

AUGER ASSEMBLY – SERVICE PARTS

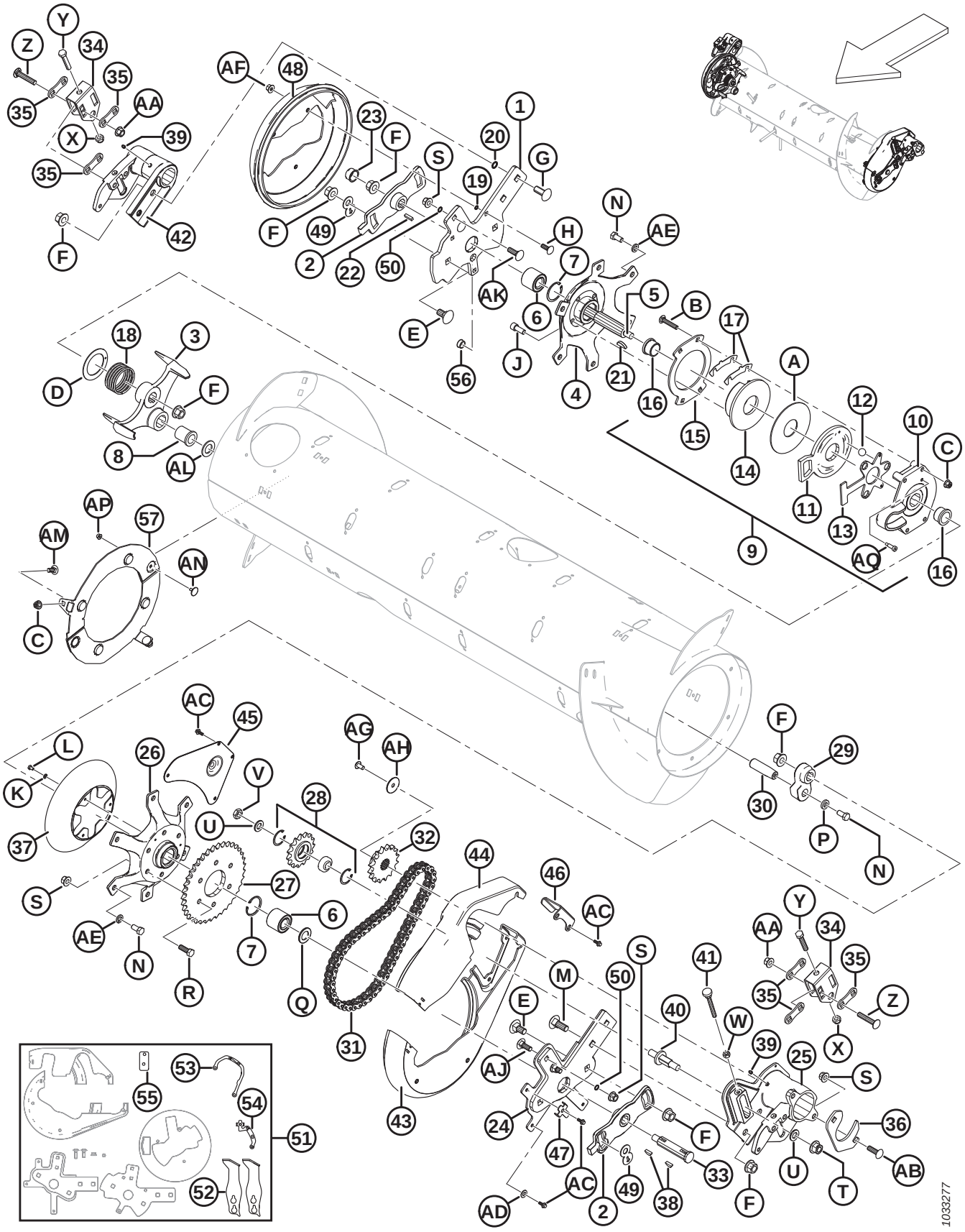

Ref	Part Number	Description	Qty	Serial Number
54	276183	PLATE – INDICATOR LH	1	
55	308056	PLATE – SPACER	1	
56	308859	PLUG – HOLE	1	
57	328500	KIT – REVERSER SHIELD RETROFIT **(2020 AND PRIOR)** [333]	1	**–396189**
	335354	**KIT – REVERSER SHIELD RETROFIT (2021 AND LATER)** [334]	**1**	**396190–**
A	213731	WASHER – PLASTIC		
B	252701	BOLT – RHSSN TFL M10 X 1.5 X 60-8.8-A3L		
C	135799	NUT – HEX FLG CTR LOC M10 X 1.5-10-A3L		
D	213733	WASHER – THRUST		
E	252691	BOLT – RHSN M16 X 2 X 35-10.9-A2L		
F	136440	NUT – HEX FLG CTR LOC M16 X 2-10-A3L		
G	252638	BOLT – RHSSN M16 X 2 X 35-8.8-AA3L		
H	184662	BOLT – RHSN TFL M10 X 1.5 X 30-8.8-A3L		
J	50154	SCREW – HEX SOC HD TFL M12 X 1.75 X 30-8.8-A3L		
K	184705	WASHER – FLAT M6-200HV-A2L		
L	136561	BOLT – HEX HD TFL M6 X 1 X 10-8.8-A3L		
M	136757	BOLT – RHSN M16 X 2 X 45-8.8-A2L		
N	50155	BOLT – HEX HD TFL M12 X 1.75 X 25-8.8-A3L		
P	187518	WASHER – FLAT		
Q	123406	WASHER – FLAT		
R	152730	BOLT – HEX HD TFL M12 X 1.75 X 35-10.9-A3L		
S	136431	NUT – HEX FLG CTR LOC M12 X 1.75-10-A3L		
T	136736	NUT – HEX FLG TOP LOCK M16 X 1.5-10-A2L		
U	172558	WASHER – NORDLOCK 5/8 IN.		
V	252288	NUT – HEX THIN FINE M16 X 1.5-8.8-A3L		
W	30505	NUT – HEX M10 X 1.5-10-A3L		
X	184695	NUT – HEX NYLOC M12 X 1.75-8-A3L		
Y	237316	BOLT – HEX HD TFL M12 X 1.75 X 60-8.8-A3L		
Z	252187	BOLT – RHSSN FINE M12 X 1.5 X 65-10.9-A3L		
AA	252188	NUT – HEX FLG CTR LOC FINE M12 X 1.5-10-A3L		
AB	197122	BOLT – RHSSN M12 X 1.75 X 40-8.8-A3L		
AC	252639	BOLT – HEX FLG HD M6 X 1 X 16 X SPCL-8.8-AA2L		
AD	18598	WASHER – SAE FLAT 13/32 I.D. X 13/16 IN. O.D. ZP		
AE	18638	WASHER – REG. LOCK 1/2 IN. NOM. I.D. ZP		
AF	136441	NUT – HEX SER FLG M10 X 1.5-8-A3L		
AG	135157	SCREW – MACHINE		
AH	31465	WASHER – FLAT		
AJ	136291	BOLT – RHSN TFL M12 X 1.75 X 35-8.8-AA1J		

333. Kit includes two magnet assemblies (NSS), bag of five fingers (MD #287802), bolts (MD #135785, 136841), nuts (MD #135799, 152668), and instructions.
334. Kit includes two magnet assemblies (NSS), finger kit (MD #337152), bolts (MD #135785, 136841), nuts (MD #135799, 152668), and instructions.

AUGER ASSEMBLY – SERVICE PARTS

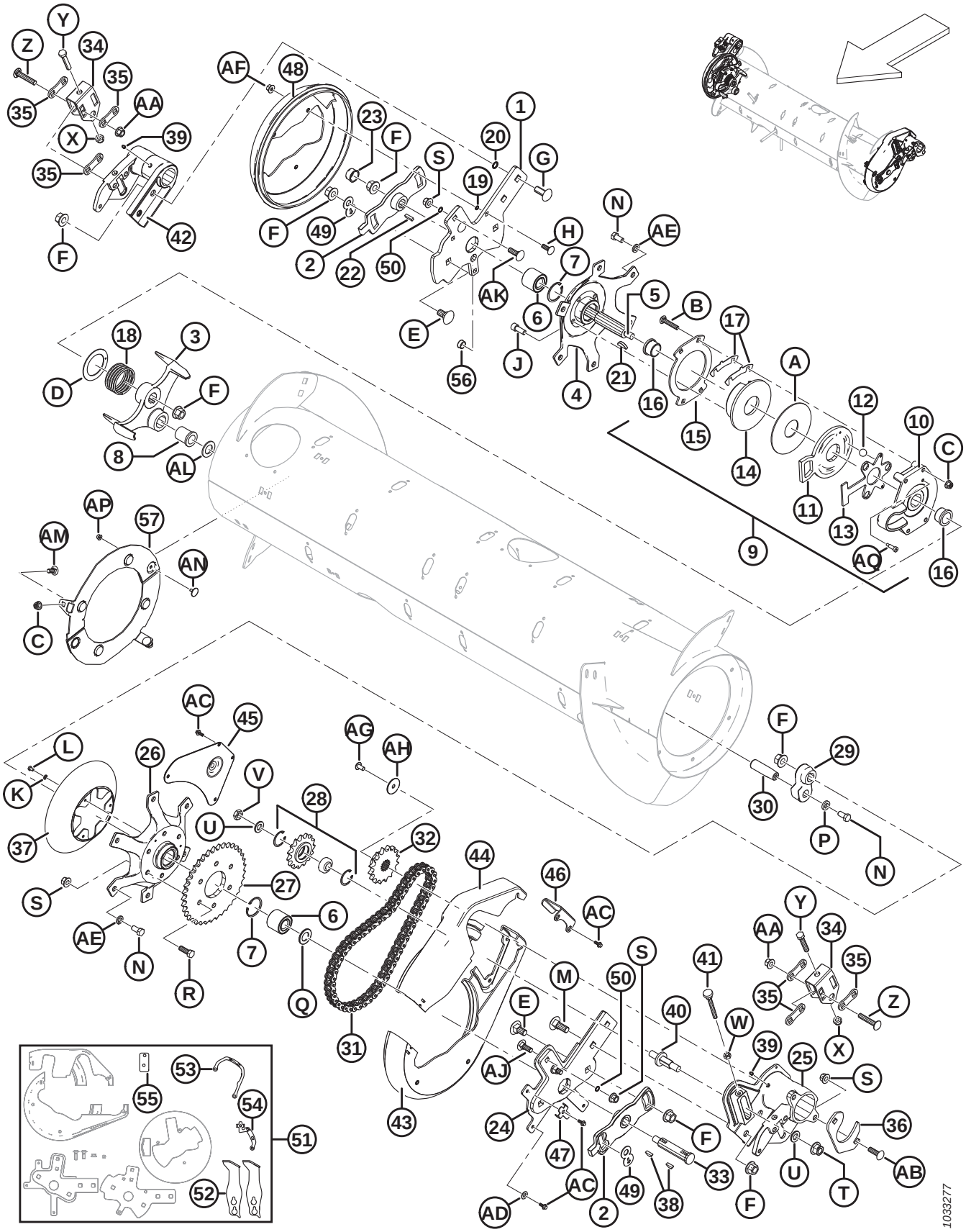

AUGER ASSEMBLY – SERVICE PARTS

Ref	Part Number	Description	Qty	Serial Number
AK	135900	BOLT – RHSN TFL M12 X 1.75 X 40-8.8-AA1J		
AL	156743	WASHER – FLAT [335]		
AM	135785	BOLT – RHSN M10 X 1.5 X 25-8.8-AA1J		
AN	136841	BOLT – ELEV CSK M6 X 1 X 16 X -8.8		
AP	152668	NUT – HEX FLG CTR LOC M6 X 1-8		
AQ	320237	SCREW – HEX SOC HD SHLDR 8 X 20 X SPCL-12.9-ZINC		

335. Washer (MD #156743) is used if tolerance on bushing (MD #213659) is exceeded. Use washer(s) as required to achieve correct tolerance.

95 Auger Float Linkage

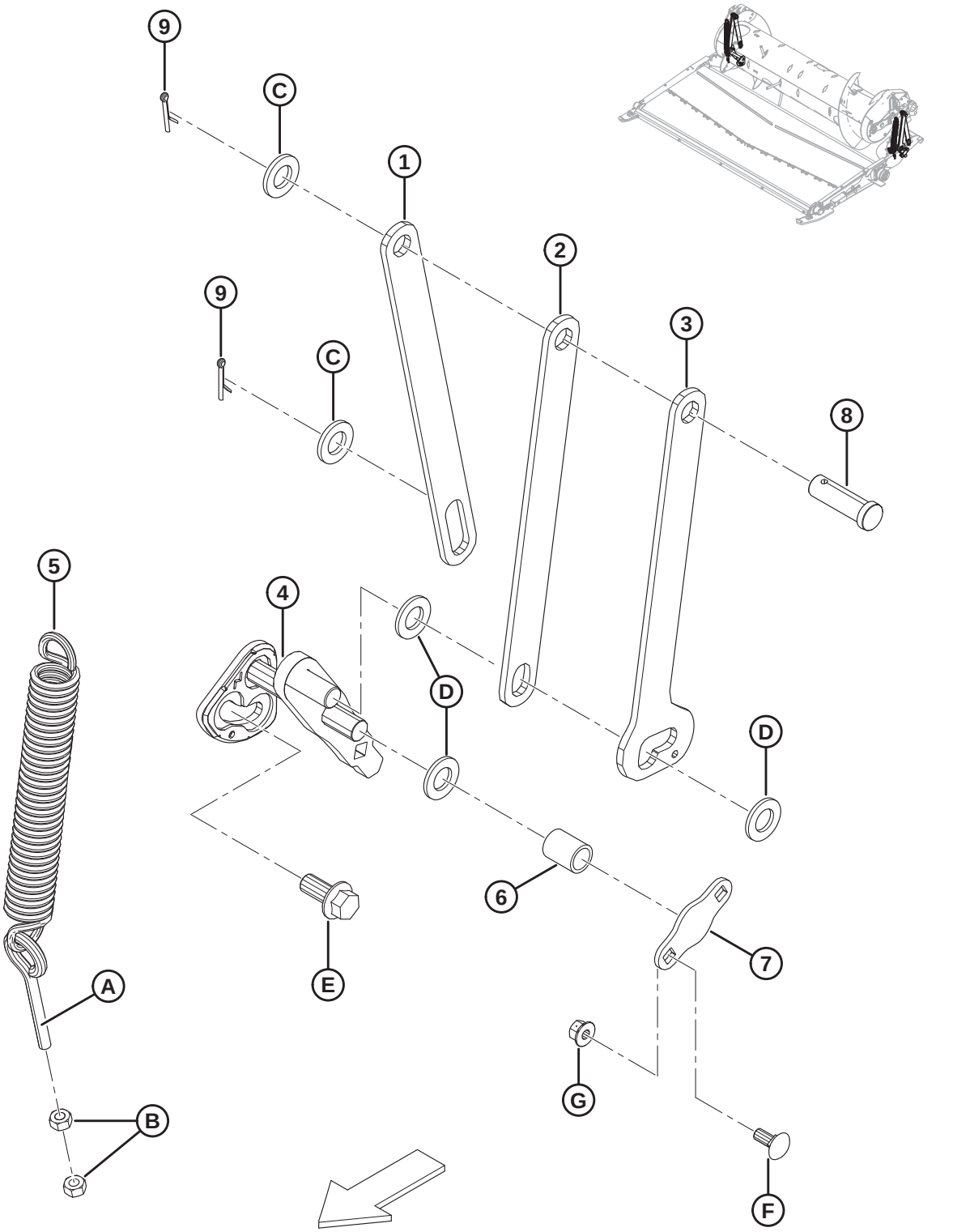

AUGER FLOAT LINKAGE

Ref	Part Number	Description	Qty	Serial Number
1	301805	BAR – AUGER SUPPORT, REAR	2	
2	301806	BAR – AUGER SUPPORT, FRONT	2	
3	301807	BAR – AUGER SUPPORT, DUAL POS	2	
4	276029	ASSY – CRANK WELDT, LH	1	
	276030	ASSY – CRANK WELDT, RH	1	
5	245966	SPRING – EXTENSION	2	
6	248348	TUBE – SPACER	2	
7	248349	PLATE – SECURING	2	
8	18626	PIN – CLEVIS	2	
9	18648	PIN – COTTER 3/16 DIA X 1.25 ZP	4	
A	231448	BOLT – EYE		
B	30505	NUT – HEX M10 X 1.5-10-A3L		
C	112130	WASHER – HARDENED		
D	18601	WASHER – SAE FLAT 13/16 I.D. X 1.5 IN. O.D. ZP		
E	136378	BOLT – HEX FLG HD TFL M16 X 2 X 35-10.9-A3L		
F	135785	BOLT – RHSN M10 X 1.5 X 25-8.8-A3L		
G	135799	NUT – HEX FLG CTR LOC M10 X 1.5-10-A3L		

96 Drives

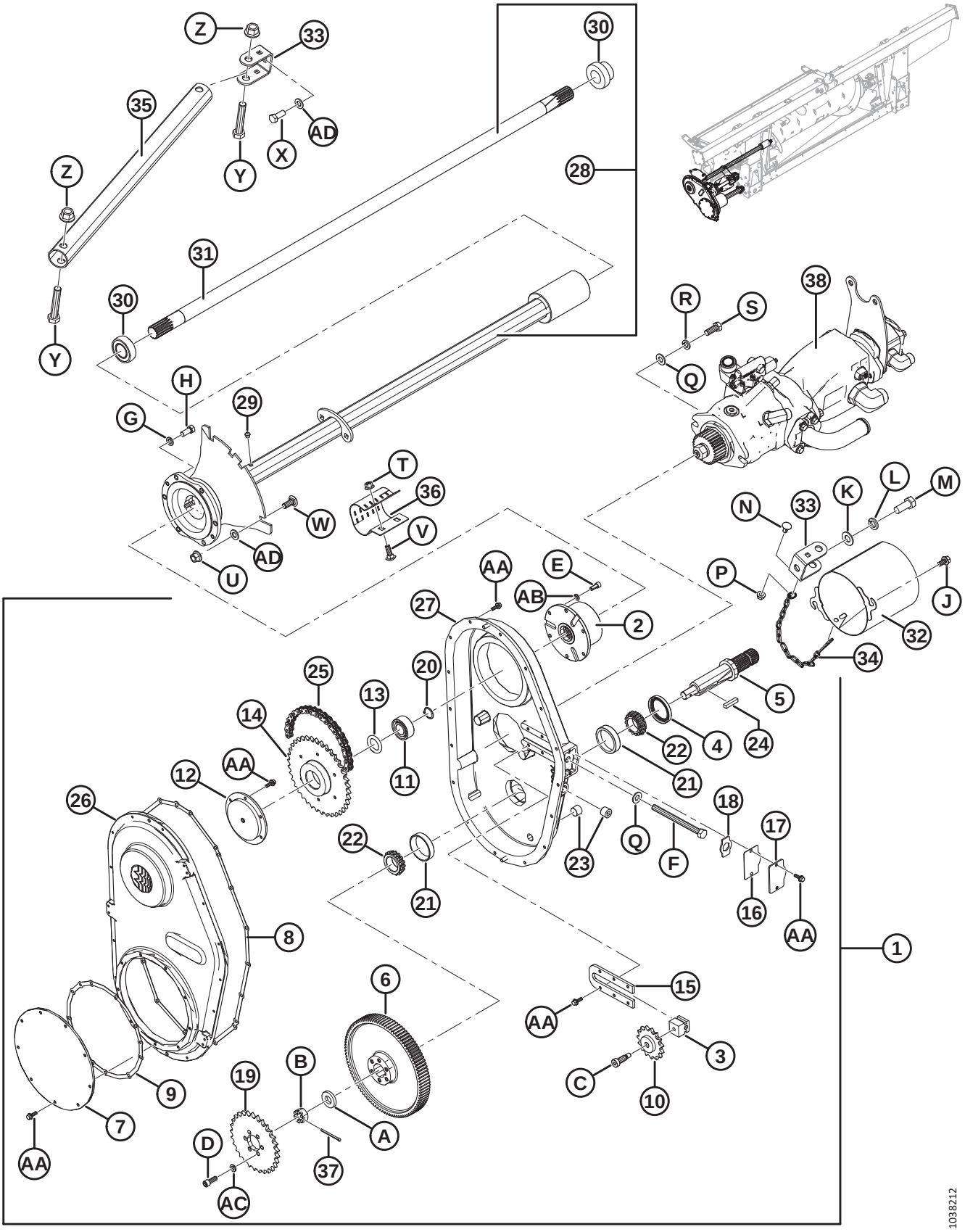

Z
33
30
35
AD
X
Y
Z
28
31
30
Y
38
R
S
Q
H
29
G
T
36
W
V
AD
U
N
33
K
L
M
P
J
AA
E
AB
2
27
32
34
25
20
13
5
14
4
24
22
AA
12
11
21
26
18
17
22
Q
23
F
21
16
AA
8
1
6
15
AA
3
B
19
C
10
9
7
A
D
37
AA
AC
1038212

DRIVES

Ref	Part Number	Description	Qty	Serial Number
1	276149	DRIVE – GEARBOX (CNH) [336]	1	
	276812	DRIVE – GEARBOX (AGCO) [336]	1	
	276811	DRIVE – GEARBOX (CLAAS) [336]	1	
	245620	DRIVE – GEARBOX (JOHN DEERE) [336]	1	
2	187466	COMPACT AUTOMATIC CLUTCH	1	
3	187476	BLOCK – IDLER	1	
4	187477	SEAL	1	
5	187478	SHAFT	1	
6	187480	GEAR – 97 TEETH (CNH/JOHN DEERE)	1	
	276353	GEAR – 89 TEETH (AGCO/CLAAS)	1	
7	187482	COVER – SPROCKET	1	
8	187697	GASKET – HOUSING	1	
9	187698	GASKET – SPROCKET COVER	1	
10	187484	SPROCKET IDLER 50C15	1	
11	187485	BEARING – BALL DBL ROW 3205	1	
12	187486	SUPPORT – PINION	1	
13	187487	SHIM – KIT	1	
14	187492	SPROCKET 50B38	1	
15	276679	PLATE – TENSIONER	1	
16	187696	GASKET – ADJUSTMENT COVER	1	
17	187494	COVER – ADJUSTING	1	
18	187495	RETAINER	1	
19	231389	SPROCKET – 50A29 (CNH/AGCO)	1	
	187524	KIT – SPROCKET, 22 TOOTH (CLAAS) [337]	1	
	248407	SPROCKET – 50A37 (JOHN DEERE)	1	
20	18898	RING – EXT RETAINING	1	
21	30701	BEARING – CUP	2	
22	30702	BEARING – CONE	2	
23	30203	PLUG – MAGNETIC PIPE	3	
24	26846	KEY	1	
25	231534	ROLLER CHAIN – RC 50 (78 PITCHES ENDLESS) CNH	1	
	156037	ROLLER CHAIN – RC 50 (74 PITCHES ENDLESS) AGCO/CLAAS	1	
	248408	ROLLER CHAIN – RC 50 (80 PITCHES ENDLESS) JD	1	
26	187481	COVER – GEARBOX	1	
27	287914	HOUSING – GEARBOX	1	
28	301663	OUTPUT SHAFT ASSEMBLY [338]	1	
29	21425	VALVE – RELIEF	1	
30	21363	BEARING – SPH OD AND COLLAR	2	
31	279689	SHAFT – OUTPUT	1	
32	133421	GUARD – WELDMENT	1	
33	187520	ANCHOR – STRUT	2	

336. Includes items #2–27 and hardware.
337. Includes sprocket and installation instructions.
338. Includes relief valve (MD #21425), two bearings (MD #21363), and shaft (MD #279689).

DRIVES

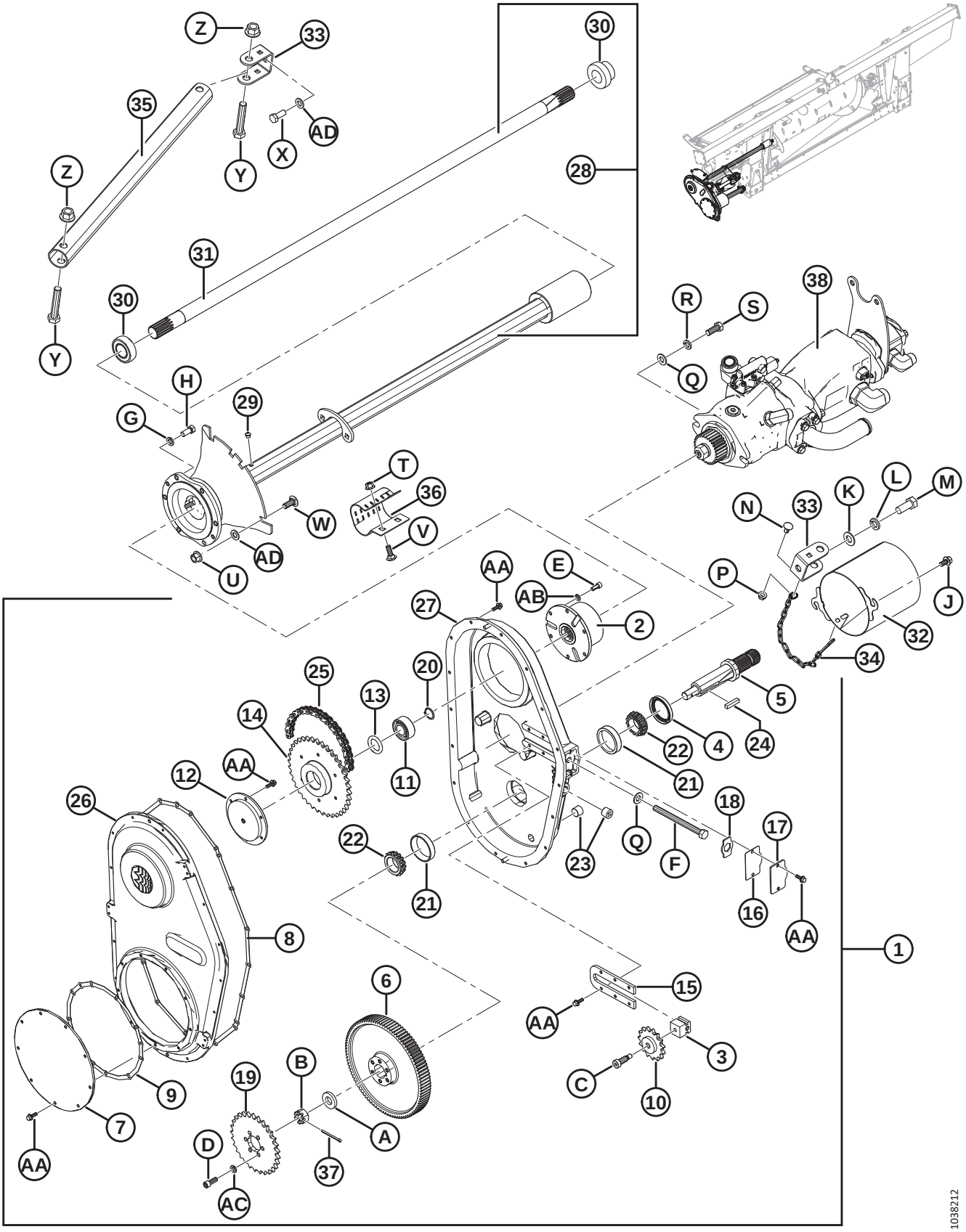

Z
33
35
AD
X
Y
Z
Y
30
28
31
30
38
R
S
Q
H
29
G
T
36
W
V
AD
U
N
33
K
L
M
P
J
32
34
AA
E
AB
2
27
20
25
13
14
5
4
24
22
21
AA
12
11
26
18
17
22
Q
F
23
21
16
AA
8
1
6
15
AA
3
C
10
B
19
9
7
A
D
37
AA
AC
1038212

Ref	Part Number	Description	Qty	Serial Number
34	279081	CHAIN	1	
35	301902	TUBE – STRUT	1	
36	248850	CLAMP	1	
37	135358	PIN – COTTER, 5/32 DIA X 2.0 ZP	1	
38	REF	PUMP ASSEMBLY **– BOSCH/REXROTH** [339]		
	REF	**PUMP ASSEMBLY – PARKER HANNIFIN** [340]		
	REF	**PUMP ASSEMBLY – EATON** [341]		
A	187483	WASHER		
B	5512	NUT – HEX SLOTTED 3/4		
C	135694	BOLT – SHOULDER SOCKET HD 1/2 X 1.0 LG		
D	135381	BOLT – SOCKET HD 3/8 X 1.0 LG		
E	135748	BOLT – SOCKET HD 5/16 X 0.75 LG		
F	276680	BOLT – HEX HD TFL 1/2-13 X 5.5 GR 5 BO		
G	18652	WASHER – REG. LOCK 7/16 IN. NOM. I.D. ZP		
H	21522	BOLT – HH 7/16 NC X 1.0 LG GR 5 ZP		
J	21821	BOLT – HH FLG (SER FACE) 3/8 NC X 0.75 GR 5 ZP		
K	18600	WASHER – SAE FLAT 21/32 I.D. X 1-5/16 IN. O.D. ZP		
L	18639	WASHER – REG. LOCK 5/8 IN. NOM. I.D. ZP		
M	21594	BOLT – HEX HD 0.625-11 UNC X 1.50		
N	21472	BOLT – RHSN 3/8-16 X .75 GR 5		
P	30228	NUT – FLANGE DT SMTH FACE 0.375-16 UNC		
Q	18599	WASHER – SAE FLAT 17/32 I.D. X 1-1/16 IN. O.D. ZP		
R	18638	WASHER – REG. LOCK 1/2 IN. NOM. I.D. ZP		
S	21491	BOLT – HH 1/2 NC X 1.25 LG GR 5 ZP		
T	135799	NUT – HEX FLG CTR LOC M10 X 1.5-10-A3L		
U	136431	NUT – HEX FLG CTR LOC M12 X 1.75-10-A3L		
V	184662	BOLT – RHSN TFL M10 X 1.5 X 30-8.8-A3L		
W	184667	BOLT – RHSN M12 X 1.75 X 30-8.8-AA1J		
X	136137	BOLT – HEX HD TFL M16 X 2 X 35-8.8-AA1J		
Y	136455	BOLT – HEX HD M16 X 2 X 85-8.8-A3L		
Z	136440	NUT – HEX FLG CTR LOC M16 X 2-10-A3L		
AA	21456	BOLT – HH FLG (SER FACE) 1/4 NC X 0.75 GR 5 ZP		
AB	18636	WASHER – REG. LOCK 5/16 IN. NOM. I.D. ZP		
AC	18637	WASHER – REG. LOCK 3/8 IN. NOM. I.D. ZP		
AD	184717	WASHER – FLAT REG M16-200HV-AA1J		

339. To verify which pump assembly is installed, refer to Section *97 Pump Assemblies – Identifying Pump, page 283*. For Bosch/Rexroth service parts, refer to Section *98 Pump Assembly – Bosch/Rexroth, page 285*.
340. To verify which pump assembly is installed, refer to Section *97 Pump Assemblies – Identifying Pump, page 283*. For Parker Hannifin service parts, refer to Section *99 Pump Assembly – Parker Hannifin (2022 Only), page 289*.
341. To verify which pump assembly is installed, refer to Section *97 Pump Assemblies – Identifying Pump, page 283*. For Eaton service parts, refer to Section *100 Pump Assembly – Eaton (2022 Only), page 293*.

97 Pump Assemblies – Identifying Pump

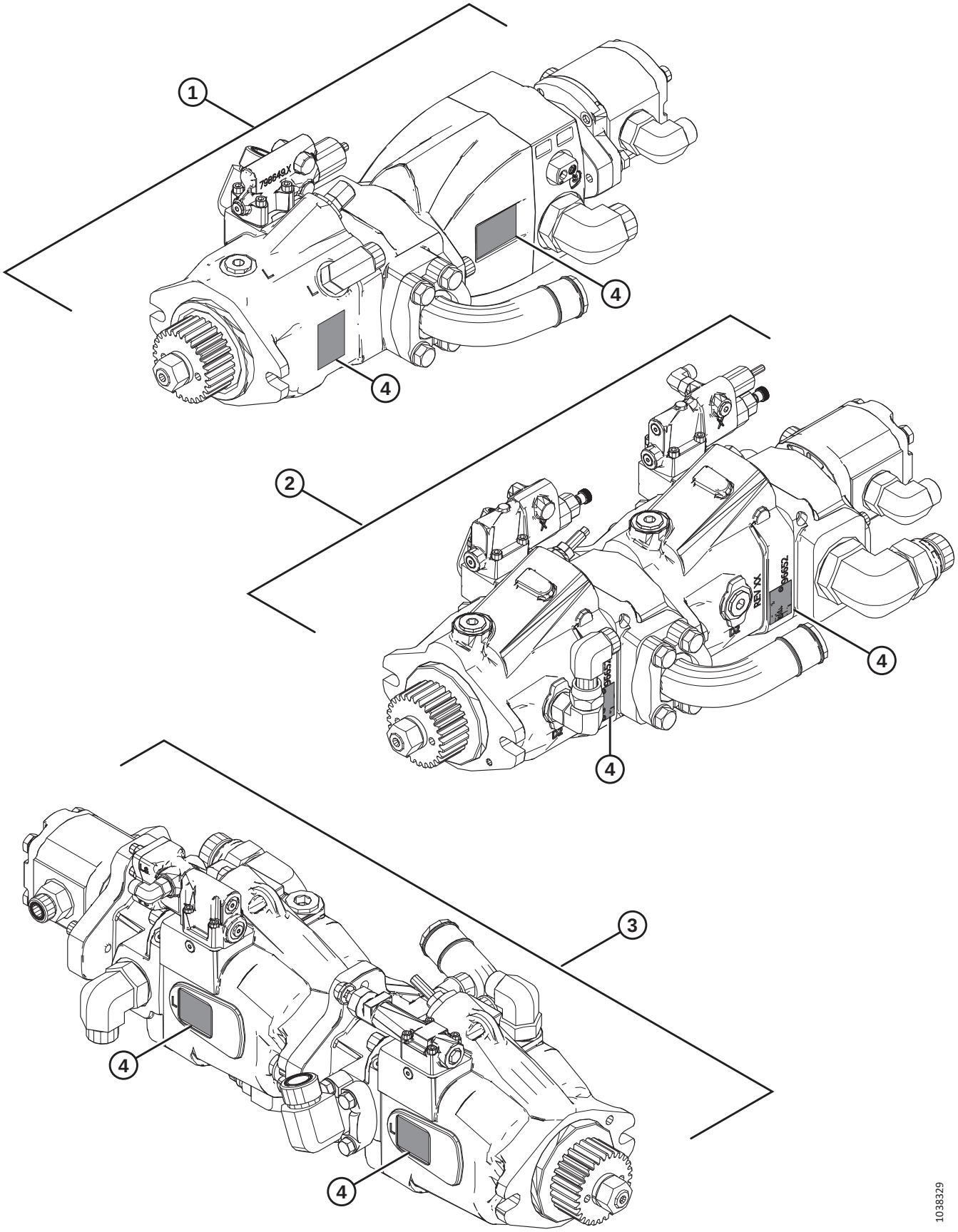

NOTE:

The Bosch/Rexroth pump assembly is installed on model year 2021 and prior, and some model year 2022 float modules. Many model year 2022 float modules have either a Parker or Eaton pump assembly installed. Refer to the parts table and illustration to identify which pump assembly is installed.

- **Bosch/Rexroth (1)** – Color: Black; refer to the illustration for serial plate locations. For service parts, refer to Section *98 Pump Assembly – Bosch/Rexroth, page 285*.
- **Parker Hannifin (2)** – Color: Black; refer to the illustration for serial plate locations. For service parts, refer to Section *99 Pump Assembly – Parker Hannifin (2022 Only), page 289*.
- **Eaton (3)** – Color: Grey; refer to the illustration for serial plate locations. For service parts, refer to Section *100 Pump Assembly – Eaton (2022 Only), page 293*.

.

Ref	Part Number	Description	Qty	Serial Number
1	NSS	PUMP ASSEMBLY – BOSCH/REXROTH		
2	NSS	PUMP ASSEMBLY – PARKER HANNIFIN		
3	NSS	PUMP ASSEMBLY – EATON		
4	REF	SERIAL PLATE		

98 Pump Assembly – Bosch/Rexroth

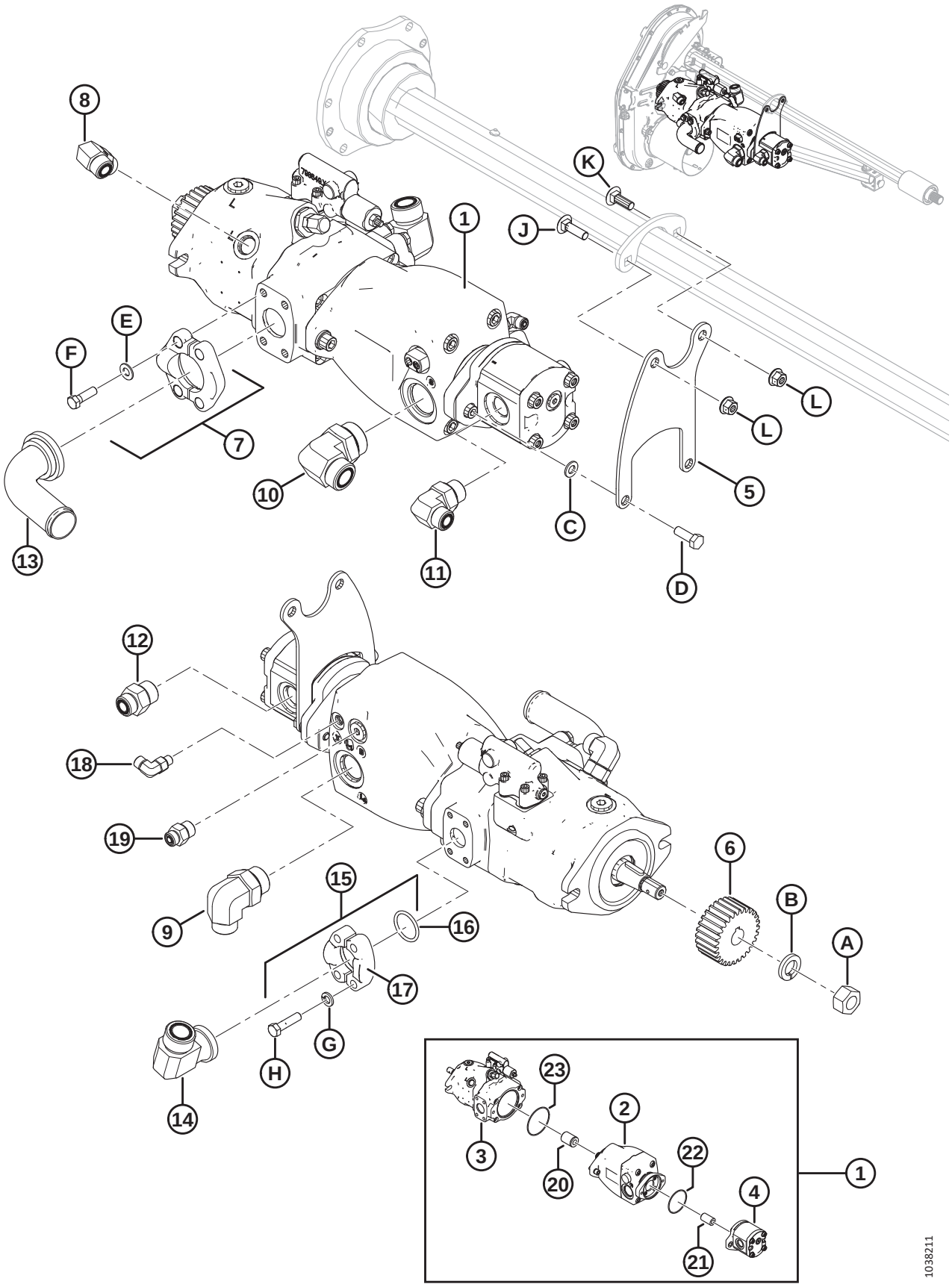

PUMP ASSEMBLY – BOSCH/REXROTH

NOTE:

Some float modules may have been shipped with Bosch/Rexroth gear pumps, which are not sold separately. To replace complete gear pump, order 16 cc or 19 cc Casappa gear pump and seal kit listed in parts list. To service seal kit on Bosch/Rexroth gear pumps, order seal kit MD #187967. For more information regarding gear pumps, refer to your header technical manual.

Ref	Part Number	Description	Qty	Serial Number
1	NSS	PUMP ASSEMBLY [342]	1	
2	311466	PUMP – PISTON, SIDE DRAPER	1	
	335447	**VALVE – PUMP CONTROL C/W CAP** [343]		
	335446	**CAP – VINYL**		
3	248089	PUMP – PISTON, KNIFE DRIVE	1	
	294890	SEAL KIT – KNIFE DRIVE PISTON PUMP C/W INSTRUCTION		
	326217	**CAP – DISP ADJUST C/W O-RING**		
	326218	**KEY – PARALLEL, 1/4 IN. ROUND ENDS**		
4	187252	PUMP – GEAR, 16 CC, FEED DRAPER (CNH/CLAAS)	1	
	295998	PUMP – GEAR, 19 CC, FEED DRAPER (JD/AGCO)	1	
	187918	SEAL KIT – GEAR PUMP (CASAPPA) [344]		
	REF	SEAL KIT – GEAR PUMP (BOSCH/REXROTH) [345]		
5	295242	BRACKET – PUMP TAIL SUPPORT	1	
6	276859	GEAR – PINION 28 TEETH 2.5 MODULE (CNH/JD)	1	
	276352	GEAR – PINION 36 TEETH 2.5 MODULE (CLAAS/AGCO)	1	
7	136246	KIT – SPLIT FLANGE, 1.5 IN. CD 61 [346]	1	
	135400	O-RING – 1.859 IN. I.D. X 0.139 IN. WALL		
8	136089	FITTING – ELBOW 90° HYD	1	
	44210	O-RING – #10 ORB		
	135867	O-RING – #10 ORFS		
9	135901	FITTING – ELBOW 90° HYD	1	
	50220	O-RING – #20 ORB		
	135868	O-RING – #12 ORFS		
10	136766	FITTING – ELBOW 90° HYD 20-16	1	
	50220	O-RING – #20 ORB		
	135554	O-RING – #16 ORFS		
11	136347	FITTING – ELBOW 90° HYD	1	
	30971	O-RING – #12 ORB		
	135867	O-RING – #10 ORFS		
12	135786	FITTING – ADAPTER	1	
	30971	O-RING – #12 ORB		
	135867	O-RING – #10 ORFS		
13	294833	FITTING – HYD ELBOW CODE 61	1	

342. Not serviced as a complete assembly. To service individual components, refer to items #2–4 and 20–23.
343. Includes vinyl cap (MD #335446).
344. Used in gear pumps (MD #187252 and 295998).
345. To service seal kit on Bosch/Rexroth gear pumps (NSS), order seal kit (MD #187967).
346. Includes two half-split flanges (MD #136106), O-ring (MD #135400), four bolts (MD #252641), and four flat washers (MD #184714).

PUMP ASSEMBLY – BOSCH/REXROTH

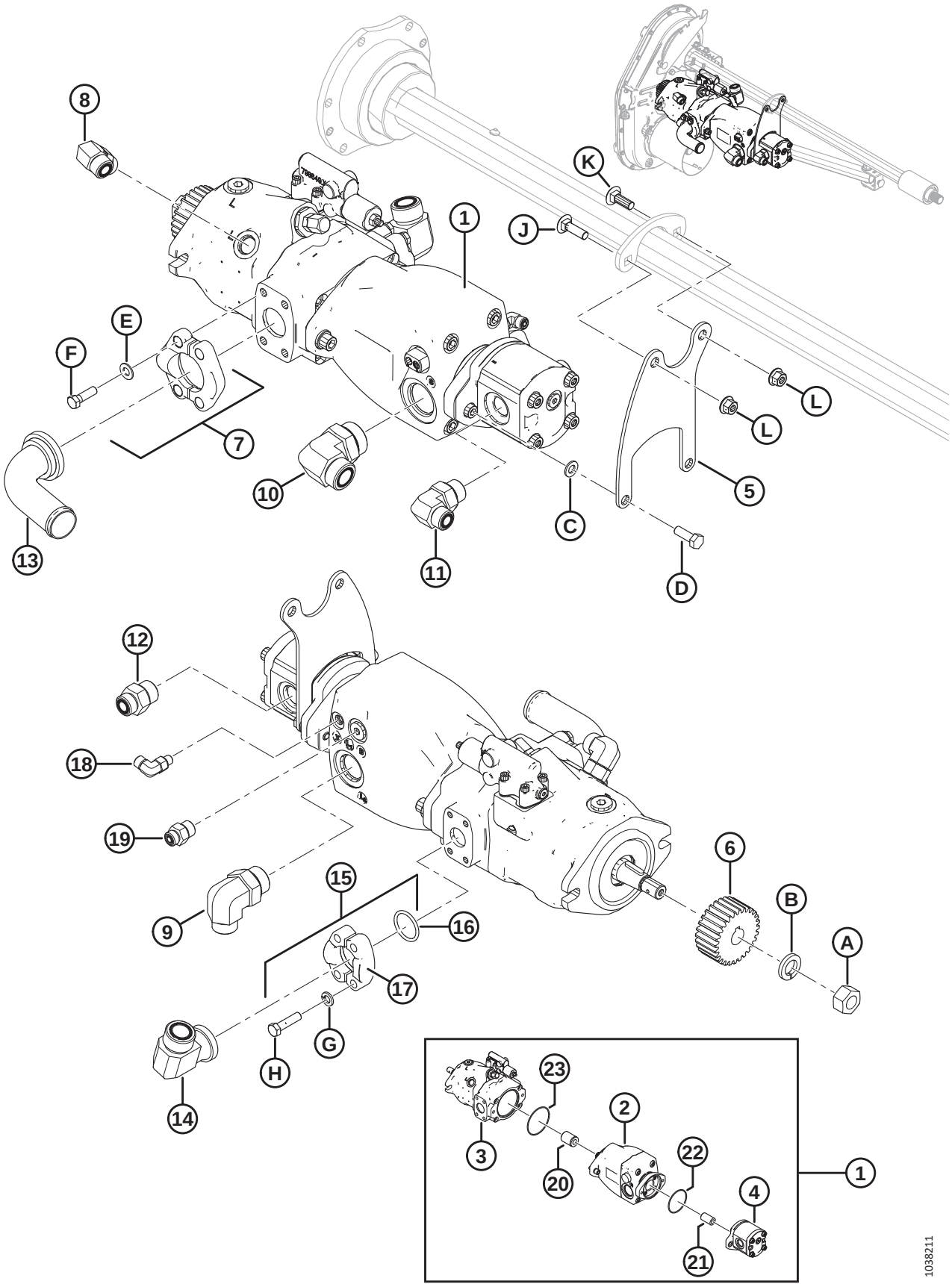

Ref	Part Number	Description	Qty	Serial Number
14	252208	FITTING – 90° #16 FLANGE X #16 MALE ORFS	1	
	112868	O-RING – #16 FLANGE		
	135554	O-RING – #16 ORFS		
15	112866	KIT – SPLIT FLANGE, 1 INCH CD 61 [347]	1	
16	112868	O-RING – 1.296 IN. I.D. X 0.139 IN. WALL	1	
17	194033	FLANGE – HALF SPLIT, 1 INCH, CODE 61	2	
18	136447	FITTING – ELBOW 90° HYD	1	
	50223	O-RING – #4 ORB		
	135957	O-RING – #4 ORFS		
19	191705	FITTING – ADAPTER 6 MORFS X 8 MORB	1	
	44209	O-RING – #8 ORB		
	135865	O-RING – #6 ORFS		
20	295139	COUPLER – SPLINED, 13-13T	1	
21	295140	COUPLER – SPLINED, 20-11T	1	
22	136024	O-RING (3 X 85) [348]	1	
23	294832	O-RING (3 X 104)	1	
A	18720	NUT – HEX 3/4-16 UNF GR 5 ZN PL		
B	18640	WASHER – REG. LOCK 3/4 IN. NOM. I.D. ZP		
C	184711	WASHER – FLAT REG. M10-200HV-A3L		
D	184661	BOLT – HEX HD TFL M10 X 1.5 X 30-8.8-A3L		
E	184714	WASHER – FLAT REG M12-300HV		
F	252642	BOLT – HH 1/2-13 X 1.75-GR8-AA3L		
G	30191	WASHER – HARDENED ASTM F436 3/8		
H	252640	BOLT – HH 3/8-16 X 1.25-GR8-AA3L		
J	**135691**	**BOLT – RHSN TFL M10 X 1.5 X 35-8.8-AA1J**		
K	**184662**	**BOLT – RHSN TFL M10 X 1.5 X 30-8.8-AA1J**		
L	**135799**	**NUT – HEX FLG CTR LOC M10 X 1.5-10**		

347. Includes two half-split flanges (MD #194033), O-ring (MD #112868), four bolts (MD #252640), and four flat washers (MD #30191).
348. O-ring (MD #136024) is included in the Gear Pump Conversion kits; refer to Section *144 Gear Pump Conversion Kits, page 407*. When replacing the gear pump separately, be sure to order O-ring (MD #136024) if the O-ring is worn or damaged.

99 Pump Assembly – Parker Hannifin (2022 Only)

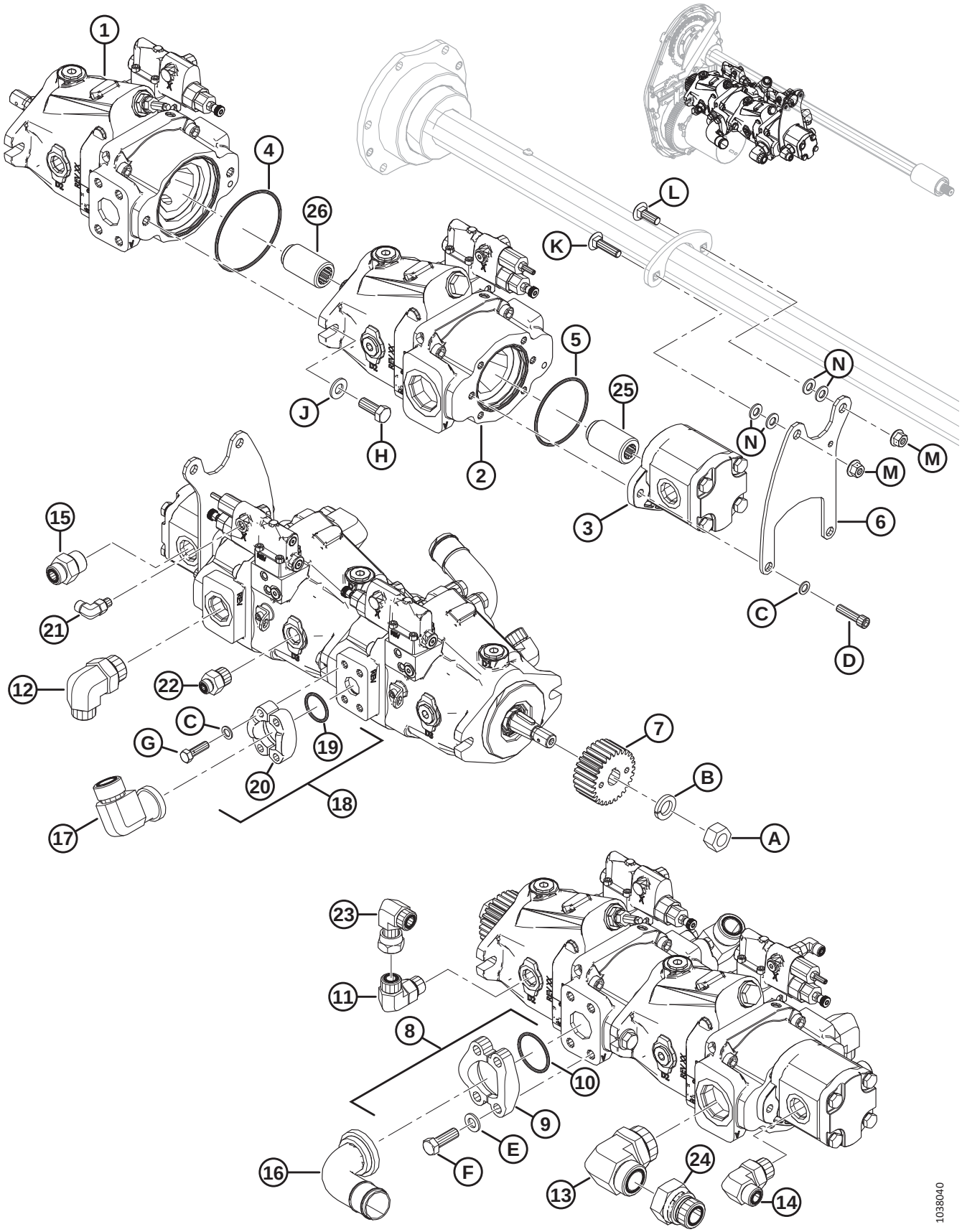

PUMP ASSEMBLY – PARKER HANNIFIN (2022 ONLY)

NOTE:

Some float modules may have been shipped with Parker gear pumps, which are not sold separately. To replace complete gear pump, order 16 cc or 19 cc Casappa gear pump and seal kit listed in parts list. To service seal kit on Parker gear pumps, order seal kit MD #326295. For more information regarding gear pumps, refer to your header technical manual.

Ref	Part Number	Description	Qty	Serial Number
1	NSS	PUMP – PISTON, KNIFE DRIVE (PARKER) [349]	1	
	326218	KEY – PARALLEL, 1/4" ROUND ENDS		
	326292	KIT – SEAL, PISTON PUMP (PARKER)		
2	NSS	PUMP – PISTON, SIDE DRAPER [350]	1	
	326292	KIT – SEAL, PISTON PUMP (PARKER)		
3	187252	PUMP – GEAR, 16 CC, FEED DRAPER (CNH/CLAAS)	1	
	295998	PUMP – GEAR, 19 CC, FEED DRAPER (JD/AGCO)	1	
	187918	SEAL KIT – GEAR PUMP [351]		
	REF	SEAL KIT – GEAR PUMP [352]		
4	320415	O-RING – 3.5 X 104.4	1	
5	320414	O-RING – 3.5 X 85.3	1	
6	326286	BRACKET – PUMP TAIL SUPPORT	1	
7	276859	GEAR – PINION 28 TEETH 2.5 MODULE (CNH/JD)	1	
	276352	GEAR – PINION 36 TEETH 2.5 MODULE (CLAAS/AGCO)	1	
8	136246	KIT – SPLIT FLANGE, 1.5 IN. CD 61 [353]	1	
9	136106	FLANGE – HALF SPLIT, 1.5 IN.	2	
10	135400	O-RING – 1.859 IN. I.D. X 0.139 IN. WALL	1	
11	136089	FITTING – ELBOW 90° HYD	1	
	44210	O-RING – #10 ORB		
	135867	O-RING – #10 ORFS		
12	135901	FITTING – ELBOW 90° HYD	1	
	50220	O-RING – #20 ORB		
	135868	O-RING – #12 ORFS		
13	320116	FITTING – ELBOW 90° HYD	1	
14	136347	FITTING – ELBOW 90° HYD	1	
	30971	O-RING – #12 ORB		
	135867	O-RING – #10 ORFS		
15	135786	FITTING – ADAPTER	1	
	30971	O-RING – #12 ORB		
	135867	O-RING – #10 ORFS		
16	294833	FITTING – HYD ELBOW CODE 61	1	

349. If replacing a Parker knife drive pump, order knife drive pump service kit (MD #326299). Refer to Section *101 Knife Drive Pump Service Kit, page 297*.
350. If replacing a Parker draper drive pump, order draper drive pump service kit (MD #326300). Refer to Section *102 Draper Drive Pump Service Kit, page 299*.
351. Used in gear pumps (MD #187252 and 295998).
352. To service seal kit on Parker gear pumps (NSS), order seal kit (MD #326295).
353. Includes two half-split flanges (MD #136106), O-ring (MD #135400), four bolts (MD #252641), and four flat washers (MD #184714).

PUMP ASSEMBLY – PARKER HANNIFIN (2022 ONLY)

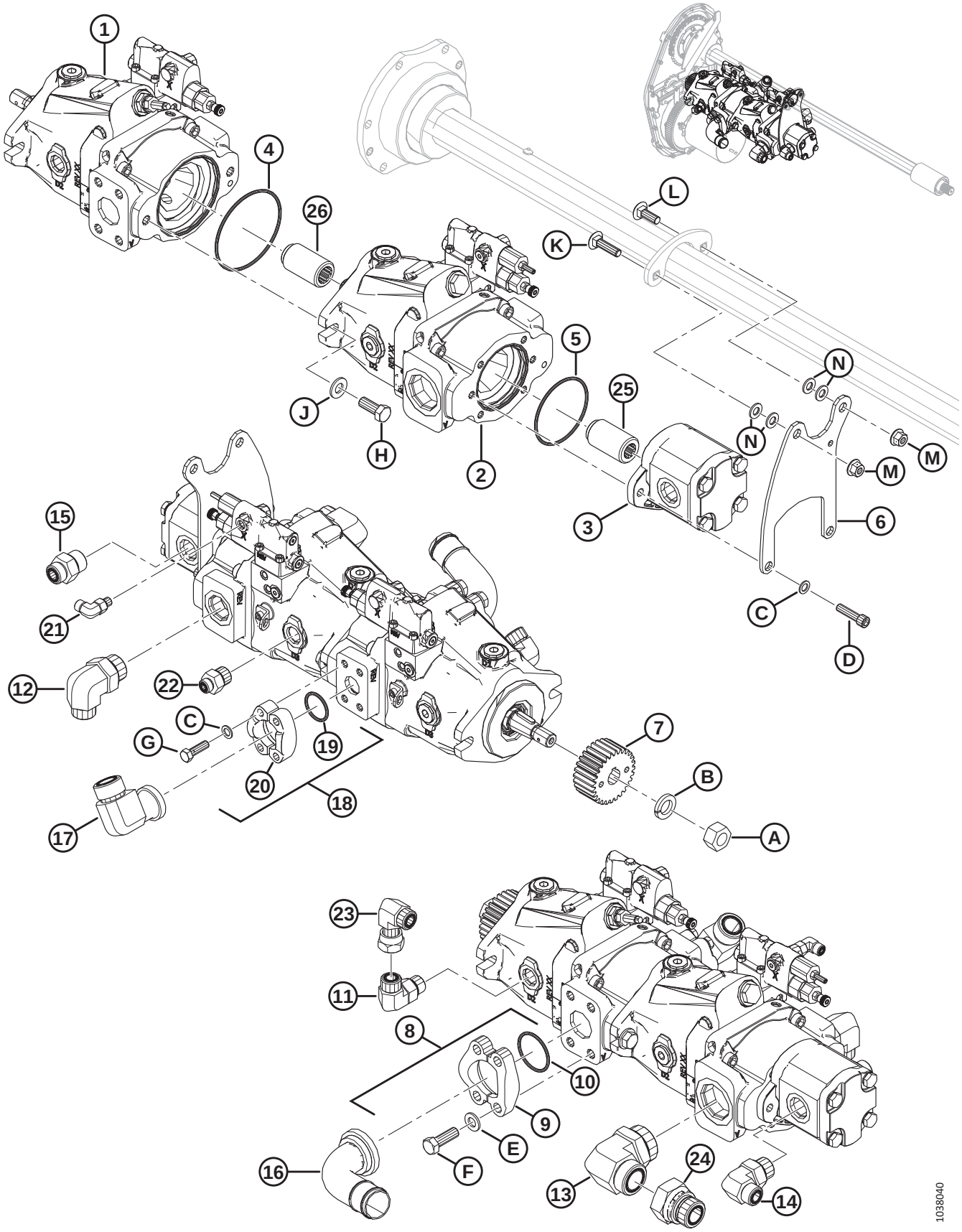

PUMP ASSEMBLY – PARKER HANNIFIN (2022 ONLY)

Ref	Part Number	Description	Qty	Serial Number
17	252208	FITTING – 90° #16 FLANGE X #16 MALE ORFS	1	
	112868	O-RING – #16 FLANGE		
	135554	O-RING – #16 ORFS		
18	112866	KIT – SPLIT FLANGE, 1 INCH CD 61 [354]	1	
19	112868	O-RING – 1.296 IN. I.D. X 0.139 IN. WALL	1	
20	194033	FLANGE – HALF SPLIT, 1 INCH, CODE 61	2	
21	136447	FITTING – ELBOW 90° HYD	1	
	50223	O-RING – #4 ORB		
	135957	O-RING – #4 ORFS		
22	184462	FITTING – ADAPTER HYD	1	
	44210	O-RING – Ø2.46 X Ø19.18		
	135865	O-RING – Ø1.78 X Ø9.25		
23	136846	FITTING – ELBOW 90° HYD	1	
24	252076	FITTING – REDUCER HYD	1	
	135554	O-RING – #16 ORFS		
25	326294	COUPLER – SPLINED, 19-11T		
26	326293	COUPLER – SPLINED, 19-13T		
A	18720	NUT – HEX 3/4-16 UNF GR 5 ZN PL		
B	18640	WASHER – REG. LOCK 3/4 IN. NOM. I.D. ZP		
C	30191	WASHER – HARDENED ASTM F436 3/8		
D	115672	SCREW – HEX SOC HD 3/8-16 X 1.5		
E	184714	WASHER – FLAT REG M12-300HV		
F	252641	BOLT – HH 1/2-13 X 1.5-GR8-AA3L		
G	252640	BOLT – HH 3/8-16 X 1.25-GR8-AA3L		
H	21491	BOLT – HEX HD 1/2-13 X 1.25 GR5-AA1J		
J	135369	WASHER – HARDENED ASTM F436 1/2		
K	152732	BOLT – RHSN M10 X 1.5 X 40-8.8-AA1J		
L	184662	BOLT – RHSN TFL M10 X 1.5 X 30-8.8-AA1J		
M	135799	NUT – HEX FLG CTR LOC M10 X 1.5-10		
N	184711	WASHER – FLAT REG M10-200HV-AA1J		

354. Includes two half-split flanges (MD #194033), O-ring (MD #112868), four bolts (MD #252640), and four flat washers (MD #30191).

100 Pump Assembly – Eaton (2022 Only)

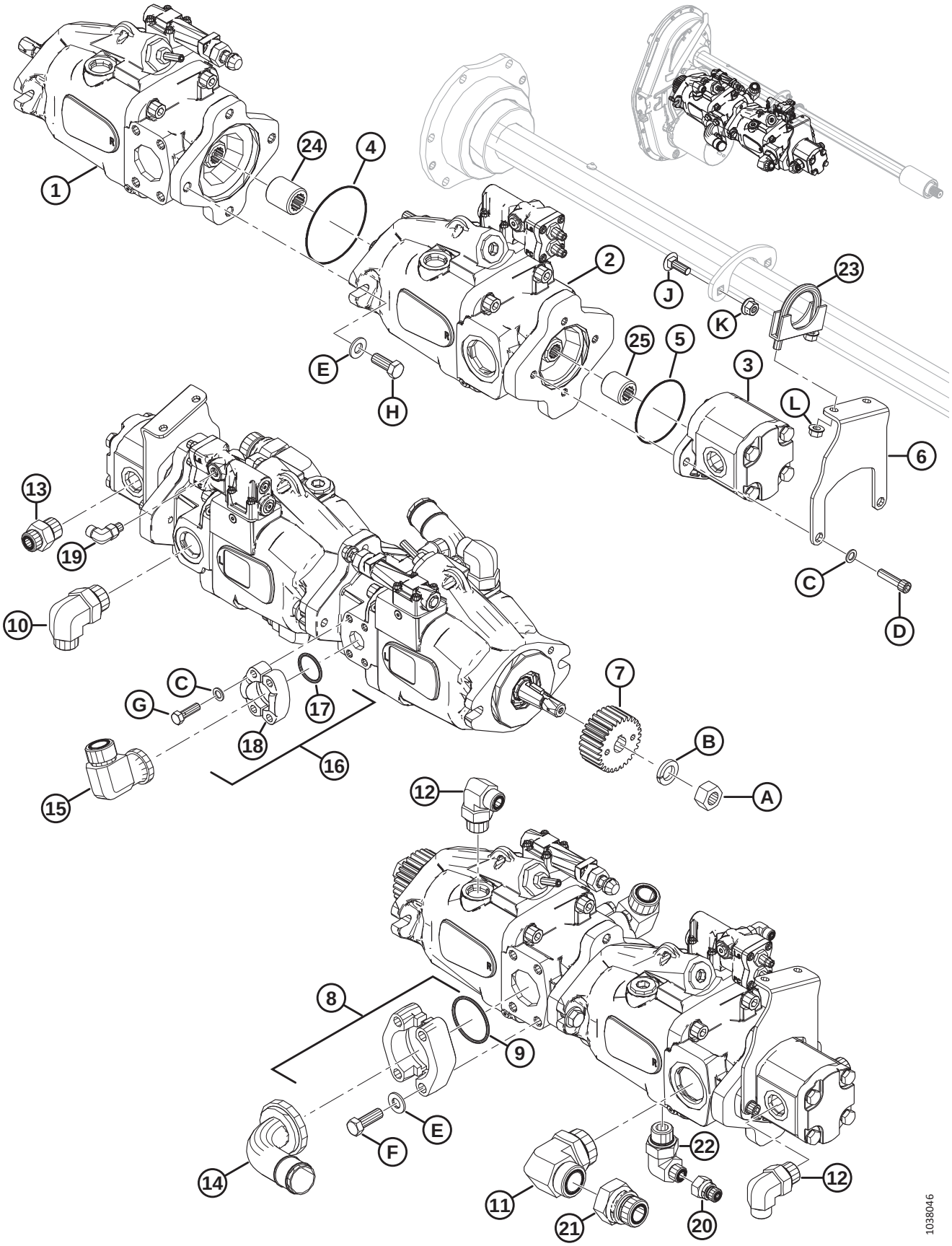

PUMP ASSEMBLY – EATON (2022 ONLY)

NOTE:

Some float modules may have been shipped with Eaton gear pumps, which are not sold separately. To replace complete gear pump, order 16 cc or 19 cc Casappa gear pump and seal kit listed in parts list. To service seal kit on Eaton gear pumps, order seal kit MD #326295. For more information regarding gear pumps, refer to your header technical manual.

Ref	Part Number	Description	Qty	Serial Number
1	NSS	PUMP – PISTON, KNIFE DRIVE [355]	1	
	180094	KEY – 1/4"SQ X 13/16" LG		
	326296	KIT – SEAL, PISTON PUMP (EATON)		
2	NSS	PUMP – PISTON, SIDE DRAPER [356]	1	
	326296	KIT – SEAL, PISTON PUMP (EATON)		
3	187252	PUMP – GEAR, 16 CC, FEED DRAPER (CNH/CLAAS)	1	
	295998	PUMP – GEAR, 19 CC, FEED DRAPER (JD/AGCO)	1	
	187918	SEAL KIT – GEAR PUMP (CASAPPA) [357]		
	REF	SEAL KIT – GEAR PUMP (EATON) [358]		
4	320417	O-RING – 1.8 X 101.3	1	
5	320438	O-RING – 1.8 X 82.3	1	
6	326237	BRACKET – TAIL SUPPORT, FORMED	1	
7	276859	GEAR – PINION 28 TEETH 2.5 MODULE (CNH/JD)	1	
	276352	GEAR – PINION 36 TEETH 2.5 MODULE (CLAAS/AGCO)	1	
8	339588	KIT – SPLIT FLANGE, 2 IN. CD61 [359]	1	
9	112867	O-RING – 3.53 X 56.14	1	
10	135901	FITTING – ELBOW 90° HYD	1	
	50220	O-RING – #20 ORB		
	135868	O-RING – #12 ORFS		
11	320116	FITTING – ELBOW 90° HYD	1	
12	136347	FITTING – ELBOW 90° HYD	2	
	30971	O-RING – #12 ORB		
	135867	O-RING – #10 ORFS		
13	135786	FITTING – ADAPTER	1	
	30971	O-RING – #12 ORB		
	135867	O-RING – #10 ORFS		
14	326222	FITTING – HYD ELBOW CODE 61	1	
15	252208	FITTING – 90° #16 FLANGE X #16 MALE ORFS	1	
	112868	O-RING – #16 FLANGE		
	135554	O-RING – #16 ORFS		
16	112866	KIT – SPLIT FLANGE, 1 INCH CD 61 [360]	1	

355. If replacing an Eaton knife drive pump, order knife drive pump service kit (MD #326299). Refer to Section *Knife Drive Pump Service Kit*.
356. If replacing an Eaton draper drive pump, order draper drive pump service kit (MD #326300). Refer to Section *Draper Drive Pump Service Kit*.
357. Used in gear pumps (MD #187252 and 295998).
358. To service seal kit on Eaton gear pumps (NSS), order seal kit (MD #326295).
359. O-ring (MD #112867), four bolts (MD #252641), and four washers (MD #135369).
360. Includes two half-split flanges (MD #194033), O-ring (MD #112868), four bolts (MD #252640), and four flat washers (MD #30191).

PUMP ASSEMBLY – EATON (2022 ONLY)

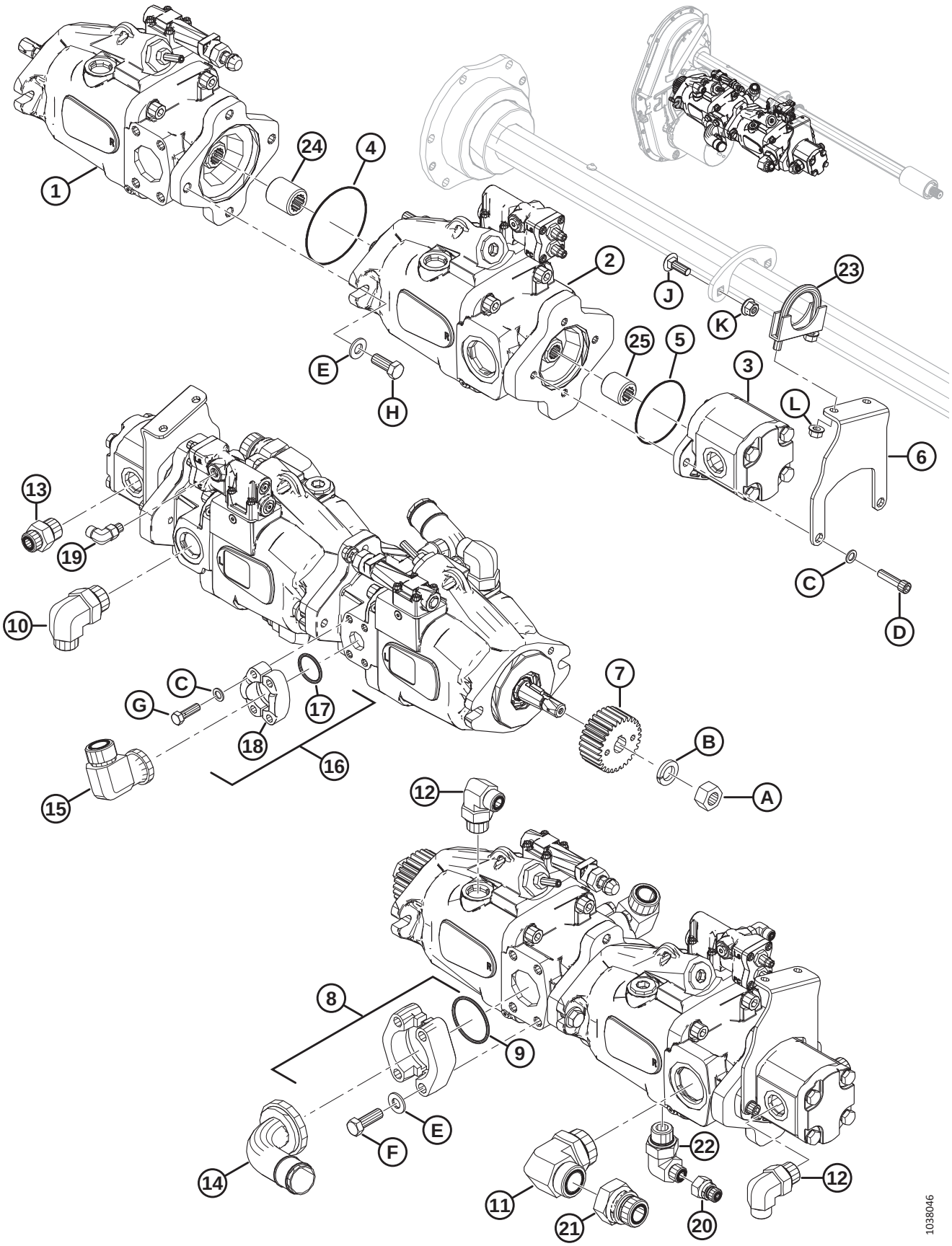

PUMP ASSEMBLY – EATON (2022 ONLY)

Ref	Part Number	Description	Qty	Serial Number
17	112868	O-RING – 1.296 IN. I.D. X 0.139 IN. WALL	1	
18	194033	FLANGE – HALF SPLIT, 1 INCH, CODE 61	2	
19	136447	FITTING – ELBOW 90° HYD	1	
	50223	O-RING – #4 ORB		
	135957	O-RING – #4 ORFS		
20	252681	FITTING – REDUCER HYD	1	
21	252076	FITTING – REDUCER HYD	1	
	135554	O-RING – #16 ORFS		
22	135890	FITTING – ELBOW 90° HYD	1	
	30971	O-RING – #12 ORB		
	135866	O-RING – Ø1.78 X Ø12.42		
23	136110	CLAMP – U-BOLT [361]	1	
24	326297	COUPLER – SPLINED, 13T (EATON)	1	
25	326298	COUPLER – SPLINED, 11T (EATON)	1	
A	18720	NUT – HEX 3/4-16 UNF GR 5 ZN PL		
B	18640	WASHER – REG. LOCK 3/4 IN. NOM. I.D. ZP		
C	30191	WASHER – HARDENED ASTM F436 3/8		
D	115672	SCREW – HEX SOC HD 3/8-16 X 1.5		
E	135369	WASHER – HARDENED ASTM F436 1/2		
F	252641	BOLT – HH 1/2-13 X 1.5-GR8-AA3L		
G	252640	BOLT – HH 3/8-16 X 1.25-GR8-AA3L		
H	21491	BOLT – HEX HD 1/2-13 X 1.25 GR5-AA1J		
J	184662	BOLT – RHSN TFL M10 X 1.5 X 30-8.8-AA1J [362]		
K	135799	NUT – HEX FLG CTR LOC M10 X 1.5-10 [362]		
L	21452	NUT – FLG SER FACE 3/8-16 UNC GR5 AA1J		

361. Comes with two flange nuts (MD #21452).
362. This hardware is required to install the P-clip that secures the case drain hose (MD #213167). Refer to Section *107 Hydraulics – Drives and Header Connection, page 313*.

101 Knife Drive Pump Service Kit

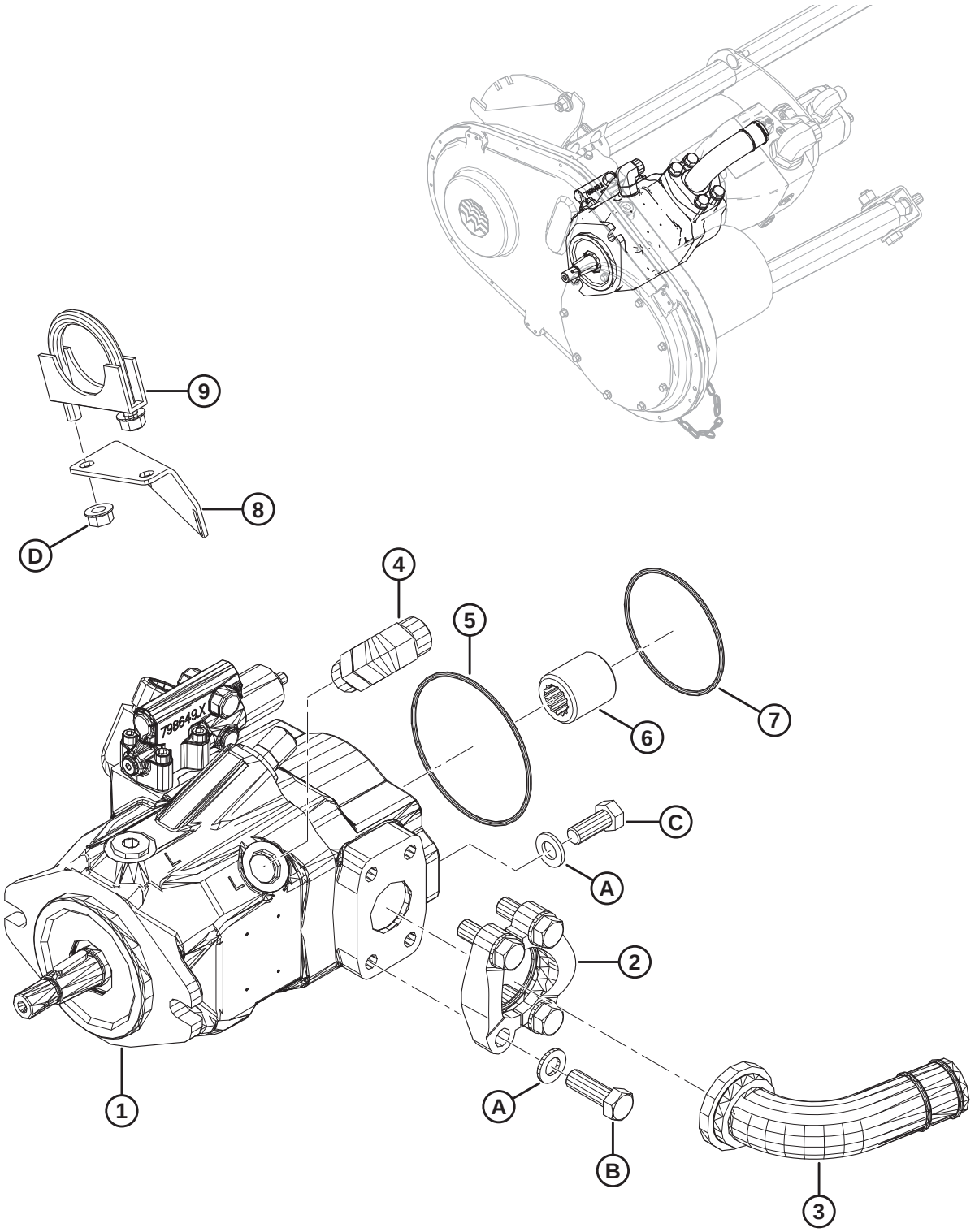

1038353

KNIFE DRIVE PUMP SERVICE KIT

NOTE:

The knife pumps on Parker and Eaton pump assemblies are not serviceable. If replacing a Parker or Eaton knife pump, order the knife drive pump service kit (MD #326299). The service kit includes a Bosch knife pump, installation instructions, and the fittings, O-rings, and hardware required to convert the new Bosch pump to the Parker/Eaton setup.

Ref	Part Number	Description	Qty	Serial Number
	326299	KIT – SERVICE , FM100 KNIFE PUMP [363]		
1	248089	PUMP – PISTON, KNIFE DRIVE [364]	1	
2	136246	KIT – SPLIT FLANGE, 1.5" CD 61 [365]	1	
3	294833	FITTING – HYD ELBOW CODE 61	1	
4	136089	FITTING – ELBOW 90° HYD	1	
	44210	O-RING – #10 ORB		
	135867	O-RING – #10 ORFS		
5	294832	O-RING – 3.0 X 104.0	1	
6	295139	COUPLER – SPLINED, 13T	1	
7	136024	O-RING – 3.00 X 85.00	1	
8	326231	BRACKET – HOSE SUPPORT [366]		
9	136110	CLAMP – U-BOLT [367]	1	
A	184714	WASHER – FLAT REG M12-300HV		
B	252642	BOLT – HH 1/2-13 X 1.75-GR8-AA3L		
C	30630	BOLT – HEX HD TFL M12 X 1.75 X 30-8.8-A3L		
D	21452	NUT – FLG SER FACE 3/8-16 UNC GR5 AA1J		

363. Order knife pump service kit (MD #326299) if replacing a Parker or Eaton knife pump. The kit includes instructions and all parts listed in this section.
364. O-ring (MD 294832) and shaft coupler (MD #295139) are included with the pump.
365. Includes two half-split flanges (MD #136106), O-ring (MD #135400), four bolts (MD #252641), and four flat washers (MD #184714).
366. Required if the Bosch pump is replacing an Eaton pump.
367. Required if the Bosch pump is replacing an Eaton pump. Comes with two flange nuts (MD #21452).

102 Draper Drive Pump Service Kit

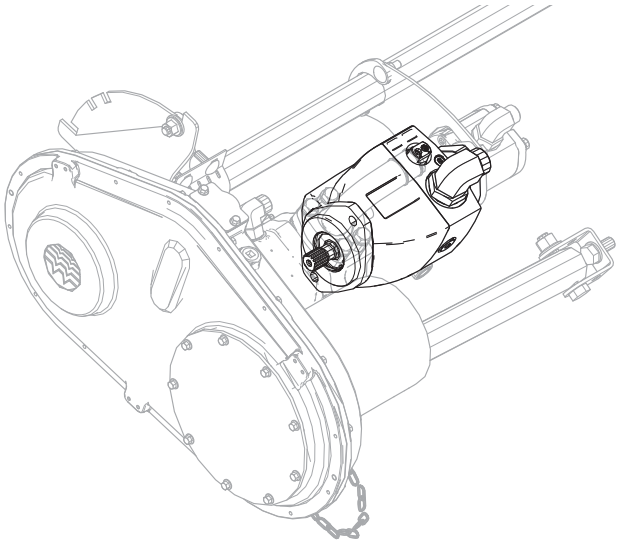

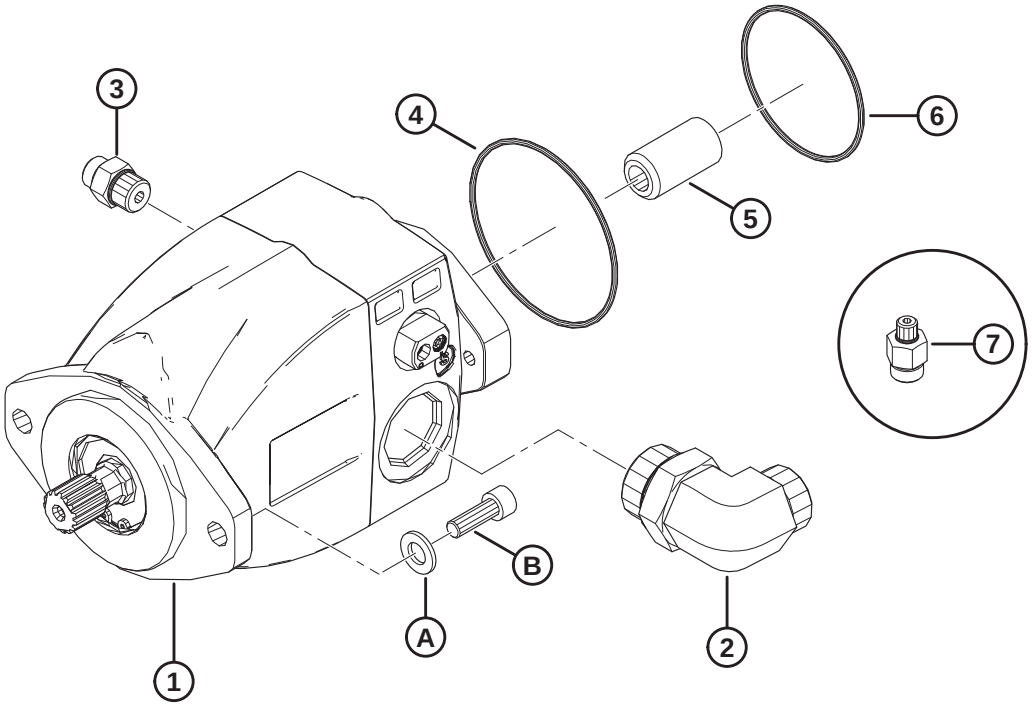

1038342

DRAPER DRIVE PUMP SERVICE KIT

NOTE:

The draper pumps on Parker and Eaton pump assemblies are not serviceable. If replacing a Parker or Eaton draper pump, order the draper drive pump service kit (MD #326300). The service kit includes a Bosch draper pump, installation instructions, and the fittings, O-rings, and hardware required to convert the new Bosch pump to the Parker/Eaton setup.

Ref	Part Number	Description	Qty	Serial Number
	326300	**KIT – SERVICE , FM100 KNIFE PUMP** [368]		
1	**311466**	**PUMP – PISTON, DRAPER DRIVE** [369]	**1**	
2	**136766**	**FITTING- – ELBOW 90° HYD**	**1**	
	50220	**O-RING – #20 ORB**		
	135554	**O-RING – #16 ORFS**		
3	**191705**	**FITTING – ADAPTER 6 MORFS X 8 MORB**	**1**	
	44209	**O-RING – #8 ORB**		
	135865	**O-RING – #6 ORFS**		
4	**294832**	**O-RING – 3.0 X 104.0**	**1**	
5	**295140**	**COUPLER – SPLINED, 20-11T**	**1**	
6	**136024**	**O-RING – 3.00 X 85.00**	**1**	
7	**135777**	**FITTING – ADAPTER** [370]	**1**	
	50223	**O-RING – #4 ORB**		
	135865	**O-RING – #6 ORFS**		
A	**184714**	**WASHER – FLAT REG M12-300HV**		
B	**135401**	**SCREW – HEX SOC HD TFL M10 X 1.5 X 30-8.8-AA1J**		

368. Order draper pump service kit (MD #326300) if replacing a Parker or Eaton draper pump. The kit includes instructions and all parts listed in this section.
369. O-ring (MD 136204) and shaft coupler (MD #295140) are included with the pump.
370. For use with diagnostic tee (MD #252554).

103 Input Driveline and Support

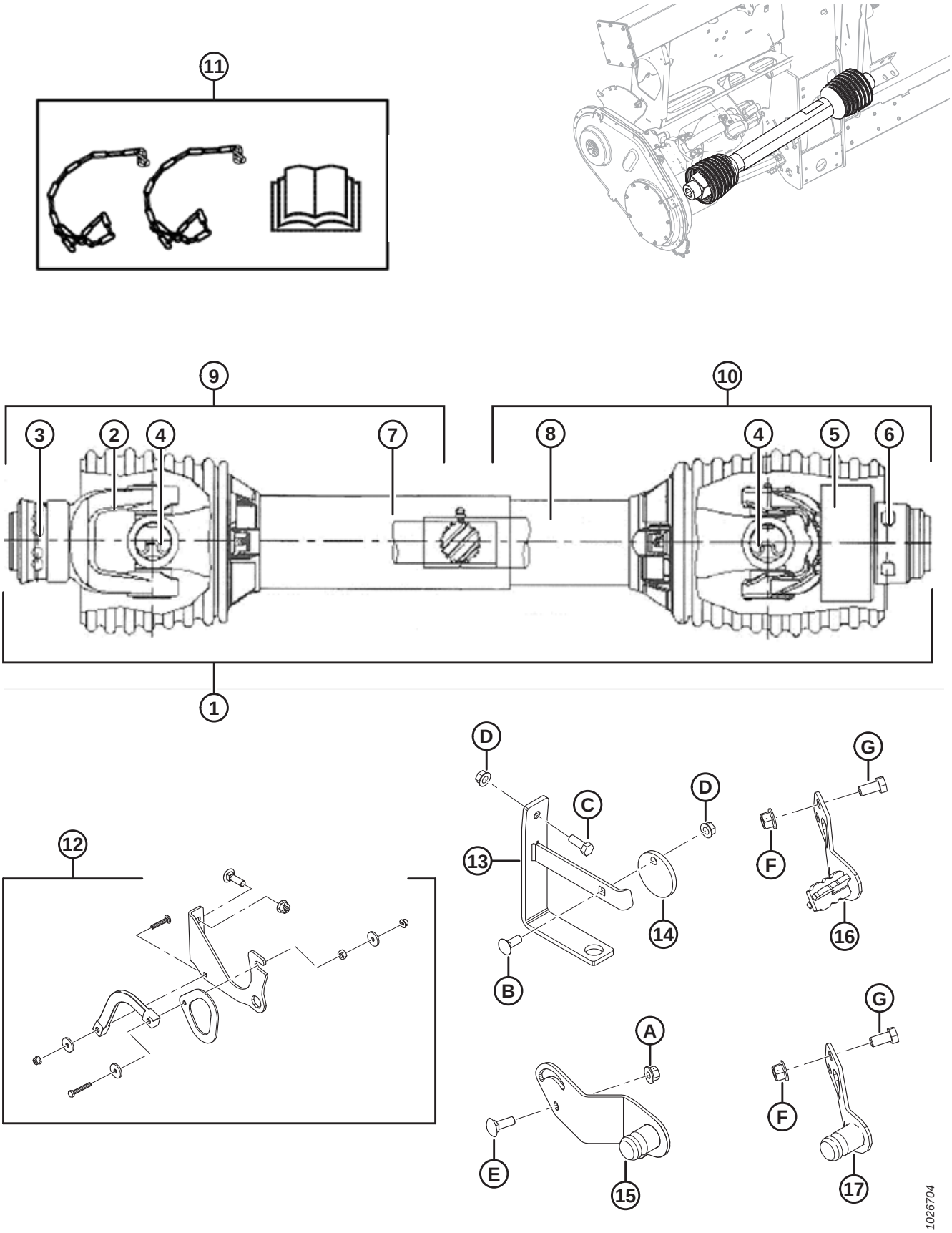

INPUT DRIVELINE AND SUPPORT

NOTE:

Half driveline kits for the combine end are listed under item #9, and half driveline kits for the header end are listed under item #10. Refer to the footnotes on individual parts to determine which combine models each kit is used for.

Ref	Part Number	Description	Qty	Serial Number
	B6595	KIT – 6T SPLINE CE DRIVELINE, CNH COMBINE [371]		
	B6596	KIT – 21T SPLINE CE DRIVELINE, CNH COMBINE [372]		
1	301996	6T DRIVELINE – COMPLETE (CE CERTIFIED) [373]	1	
	187553	21T DRIVELINE – COMPLETE (CE CERTIFIED) [374]	1	
	187550	21T DRIVELINE – COMPLETE (CE CERTIFIED) [375]	1	
	187551	HEX BORE DRIVELINE – COMPLETE (CE CERTIFIED) [376]	1	
	314306	1 3/4-20 SPL DRIVELINE – COMPLETE (CE CERTIFIED) [377]	1	
	301704	38-8 SPL DRIVELINE – COMPLETE (CE CERTIFIED) [378]	1	
	287814	SHIELD – REPAIR KIT CE	A/R	
2	133634	YOKE – SPRING LOCK, 6T	1	
	133637	YOKE – SPRING LOCK, 21T	1	
	133641	YOKE – SPRING LOCK, HEX BORE [376]	1	
	150890	YOKE – SPRING LOCK, 1 3/4-20 SPLINE [377]	1	
	314657	YOKE – SPRING LOCK, 38-8 SPLINE [378]	1	
3	40095	REPAIR KIT – SPRING LOCK YOKE (6T AND 21T)	A/R	
	133640	REPAIR KIT – SPRING LOCK YOKE (HEX BORE) [376]		
	150891	REPAIR KIT – SPRING LOCK YOKE (1 3/4-20 SPLINE) [377]		
	314656	REPAIR KIT – SPRING LOCK YOKE (38-8 SPLINE) [378]		
4	142777	CROSS JOURNAL ASSEMBLY [379]	2	
5	133631	YOKE – FREE MOTION	1	
6	133632	REPAIR KIT – AUTO LOCK YOKE		

371. Case IH Midrange/Flagship 10/20/30/40 Series, 2016 and prior New Holland CR/CX, and Versatile RT490. Kits available through Whole Goods only.
372. Model year 2017 and later Case and New Holland combines. Kits available through Whole Goods only.
373. Case IH Midrange/Flagship 10/20/30/40 Series, all New Holland CR/CX.
374. JD STS/S Series (except Widebody Walker Machines listed below), CLAAS Lexion, AGCO, and 2017 and later Case and New Holland combines.
375. JD Widebody Walker Machines – 9650/9660, 9660 WTS, and T9670.
376. Case IH 88 Series and 2300/2500 Series.
377. AGCO IDEAL™ 7/8/9.
378. Rostselmash 760/780.
379. Includes clips and lube fitting.

INPUT DRIVELINE AND SUPPORT

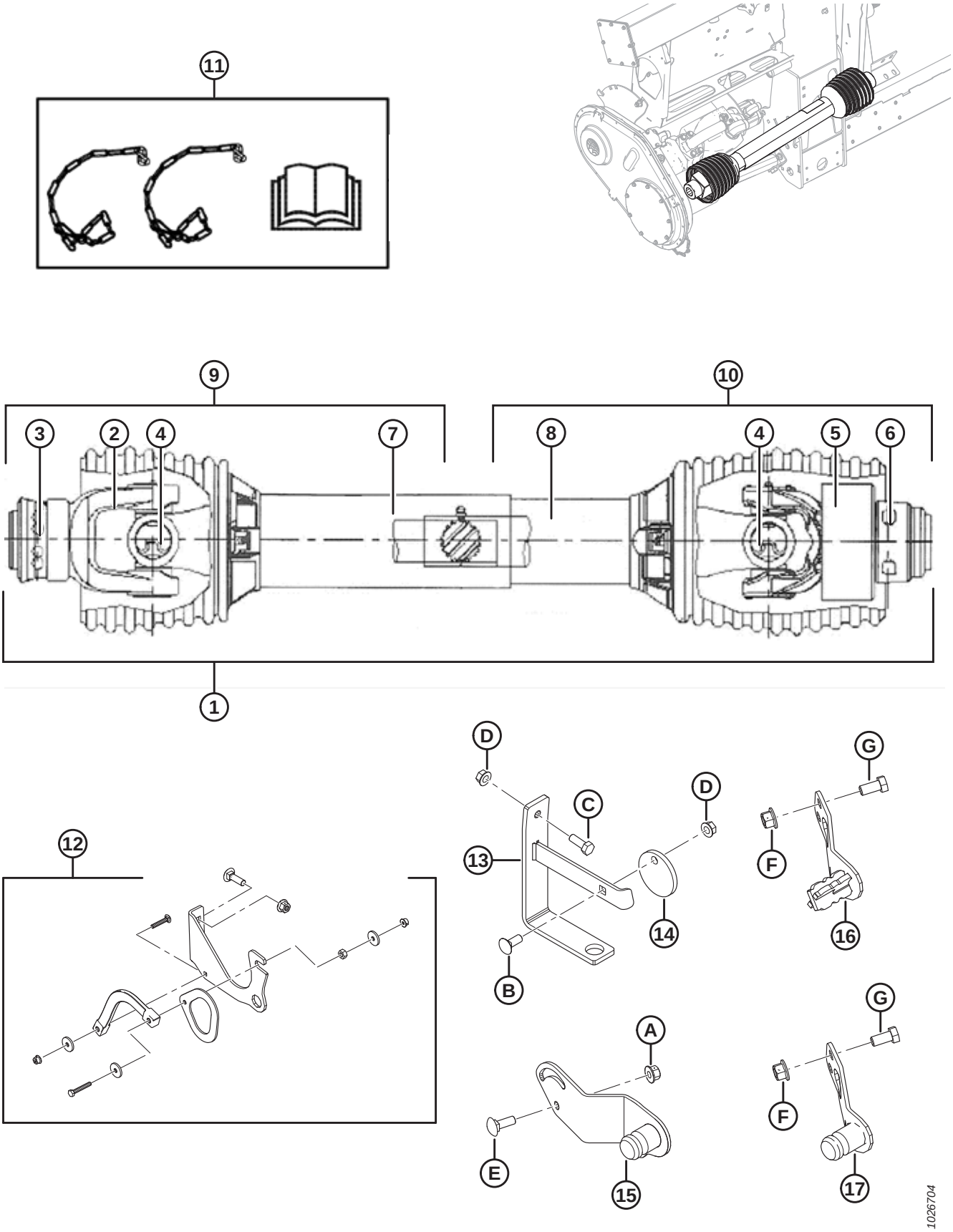

INPUT DRIVELINE AND SUPPORT

Ref	Part Number	Description	Qty	Serial Number
7	322207	KIT – GUARD, OUTER (6T AND 21T DRIVELINE) [380]	1	
	322203	KIT – GUARD, OUTER (21T DRIVELINE) [381]	1	
	322202	KIT – GUARD, OUTER (HEX BORE DRIVELINE) [382]	1	
	322205	KIT – GUARD, OUTER (1 3/4-20, 38-8 SPL DRIVELINE) [383]	1	
8	322208	KIT – GUARD, INNER (6 T AND 21T DRIVELINE) [380]	1	
	322209	KIT – GUARD, INNER (21T DRIVELINE) [381]	1	
	322210	KIT – GUARD, INNER (HEX BORE DRIVELINE) [382]	1	
	322211	KIT – GUARD, INNER (1 3/4-20, 38-8 SPL DRIVELINE) [383]	1	
9	301997	ASSY – JOINT AND SHAFT HALF CE (6T COMBINE END) [384]	1	
	322212	KIT – HALF DRIVELINE, OUTER (21T COMBINE END) [385]	1	
	322199	KIT – HALF DRIVELINE, OUTER (21T COMBINE END) [381]	1	
	322198	KIT – HALF DRIVELINE, OUTER (HEX BORE COMBINE END) [382]	1	
	314658	ASSY – JOINT AND SHAFT HALF CE (1 3/4-20 SPLINE COMBINE END) [386]	1	
	314653	ASSY – JOINT AND SHAFT HALF CE (38-8 SPLINE COMBINE END) [387]	1	
	220766	SHIELD – REPAIR KIT CE	A/R	
10	322257	KIT – HALF DRIVELINE, INNER (6T AND 21T HEADER END) [380]	1	
	322258	KIT – HALF DRIVELINE, INNER (21T HEADER END) [381]	1	
	322259	KIT – HALF DRIVELINE, INNER (HEX BORE HEADER END) [382]	1	
	322234	KIT – HALF DRIVELINE, INNER (1 3/4-20 AND 38-8 SPL HEADER END) [383]	1	
	220766	SHIELD – REPAIR KIT CE	A/R	
11	171277	KIT – CE CONVERSION (EXPORT) [388]	A/R	–346189

380. JD STS/S Series (except Widebody Walker Machines listed below), CLAAS Lexion, AGCO, Case IH Midrange/Flagship 10/20/30/40 Series, all New Holland CR/CX, 2017 and later CNH combines, and Versatile RT490.
381. JD Widebody Walker Machines – 9650/9660, 9660 WTS, and T9670.
382. Case IH 88 Series and 2300/2500 Series.
383. AGCO IDEAL™ 7/8/9 and Rostselmash 760/780.
384. Case IH Midrange/Flagship 10/20/30/40 Series, 2016 and prior New Holland CR/CX, and Versatile RT490.
385. JD STS/S Series (except Widebody Walker Machines listed below), CLAAS Lexion, AGCO, and 2017 and later Case and New Holland combines.
386. AGCO IDEAL™ 7/8/9.
387. Rostselmash 760/780.
388. Includes two chains, decals, CE manual, and instruction sheet. Service part only for float modules made in model year 2018 and prior.

INPUT DRIVELINE AND SUPPORT

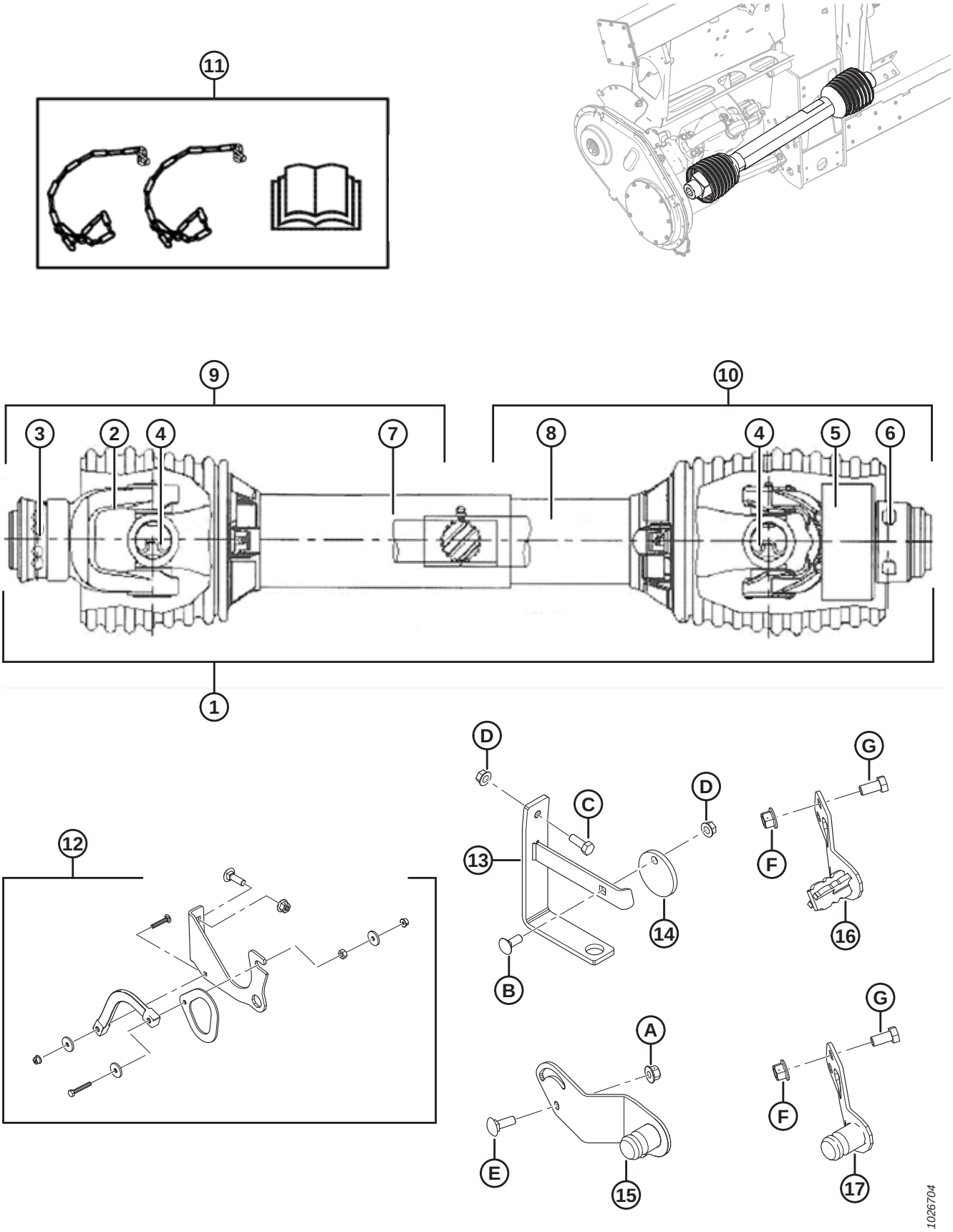

INPUT DRIVELINE AND SUPPORT

Ref	Part Number	Description	Qty	Serial Number
12	REF	ASSY – DRIVELINE SUPPORT [389]	1	
13	133166	BRACKET – DRIVELINE HANGER (2016–PRIOR) [390]	1	–301189
14	133165	DISC – LOCK, DRIVELINE HANGER (2016–PRIOR) [390]	1	–301189
15	276566	SUPPORT – WELDMENT PTO STORAGE [391]	1	
16	308015	SUPPORT – WELDMENT PTO STORAGE (6T CNH) [392]	1	
17	308124	SUPPORT – WELDMENT PTO STORAGE (21T CNH) [393]	1	301190–
A	135799	NUT – HEX FLG CTR LOC M10 X 1.5-10-A3L		
B	19965	BOLT – RHSN 3/8-16 X 1-GR5-ZP		
C	20077	BOLT – HEX HD 3/8 NC X 1.0 LG GR 5 ZP [394]		
D	30228	NUT – FLG DT SMTH FACE 0.375-16 UNC		
E	184662	BOLT – RHSN TFL M10 X 1.5 X 30-8.8-A3L		
F	136431	NUT – HEX FLG CTR LOCK M12 X 1.75-10		
G	50155	BOLT – HEX HD TFL M12 X 1.75 X 25-8.8-AA1J		

389. Includes support (NSS), hook (NSS), strap (NSS), and hardware. Driveline support assembly replaced by bracket (MD #133166), disc (MD #133165), and hardware B–D for float modules made in model year 2016 and prior.
390. Service part only for float modules made in model year 2016 and prior, AGCO IDEAL™ 7/8/9, Case IH 2300/2500 Series, and Rostselmash 760/780.
391. Gleaner R/S, CLAAS Lexion, John Deere, and AGCO.
392. Case IH Midrange/Flagship 10/20/30/40 Series, all New Holland CR/CX, and Versatile RT490.
393. Model year 2017 and later CNH combines.
394. Bolt E (MD #184662) and nut A (MD #135799) used to secure driveline hanger bracket (MD #133166) for AGCO IDEAL™ 7/8/9, Case IH 2300/2500 Series, and Rostselmash 760/780.

104 Hydraulics – Frame Components

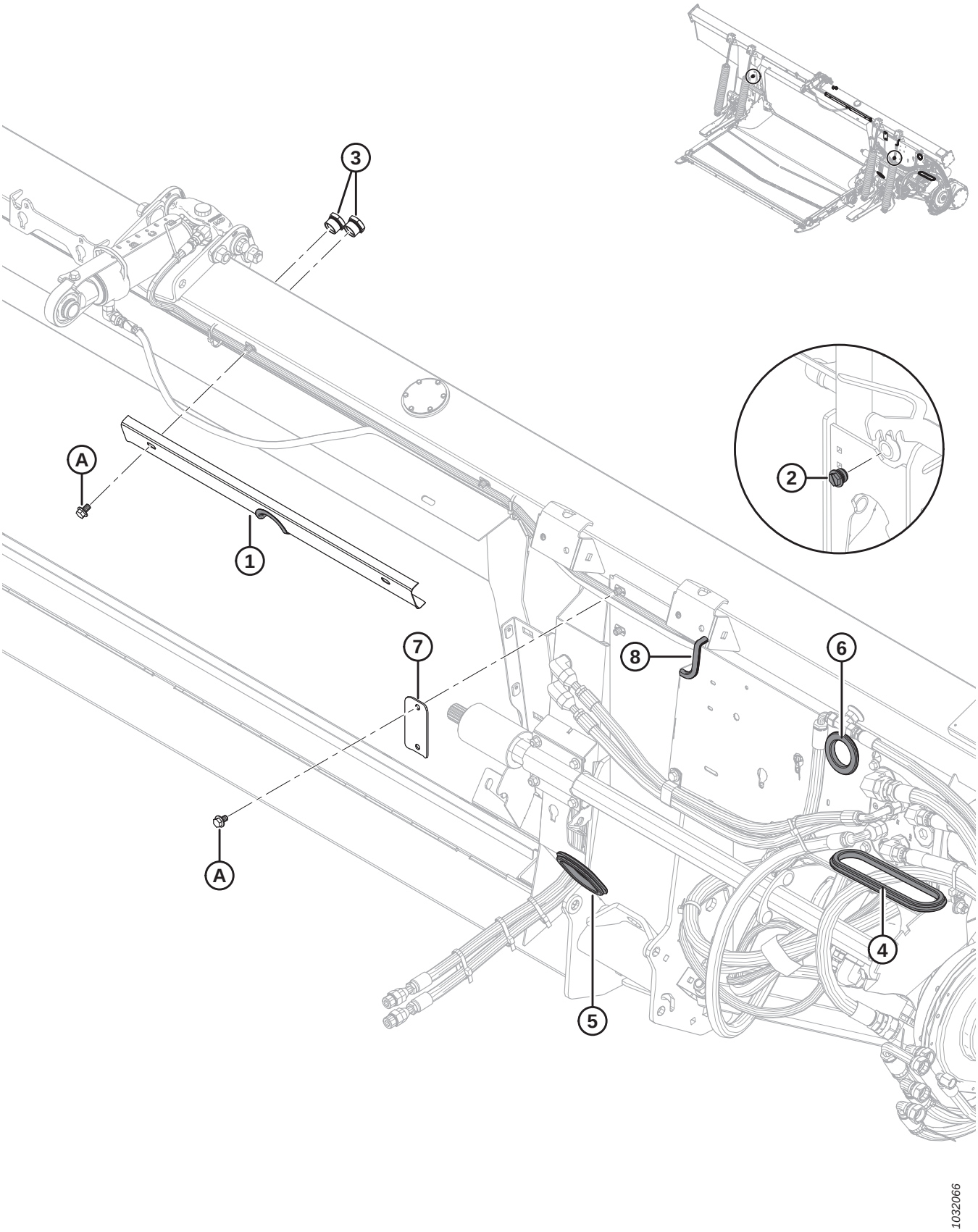

HYDRAULICS – FRAME COMPONENTS

Ref	Part Number	Description	Qty	Serial Number
1	294949	ASSY – HOSE HOLDER [395]	1	
	109791	MOULDING	1	
2	103575	PLUG – HEX CW O-RING [396]	2	371190–
	156051	PLUG – #16 ORB [397]	2	–371189
3	304668	SIGHT GLASS	2	
4	276033	GROMMET – RUBBER	1	
5	276034	GROMMET – RUBBER	1	
6	276560	GROMMET – RUBBER	1	
7	287272	CLAMP – HOSE	1	
8	31889	MOULDING (SPEC 31886)	1	
A	136151	BOLT – HEX FLG HD TFL M10 X 1.5 X 16-8.8-A3L		

395. Includes holder with cutout (not serviced separately) and moulding (MD #109791).
396. For model year 2020 and later. Two drain plugs are located on the rear of the float module frame.
397. For model year 2019 and prior. Two drain plugs are located on the rear of the float module frame.

105 Hydraulics – Center-Link and Header Tilt / Reel Fore-Aft

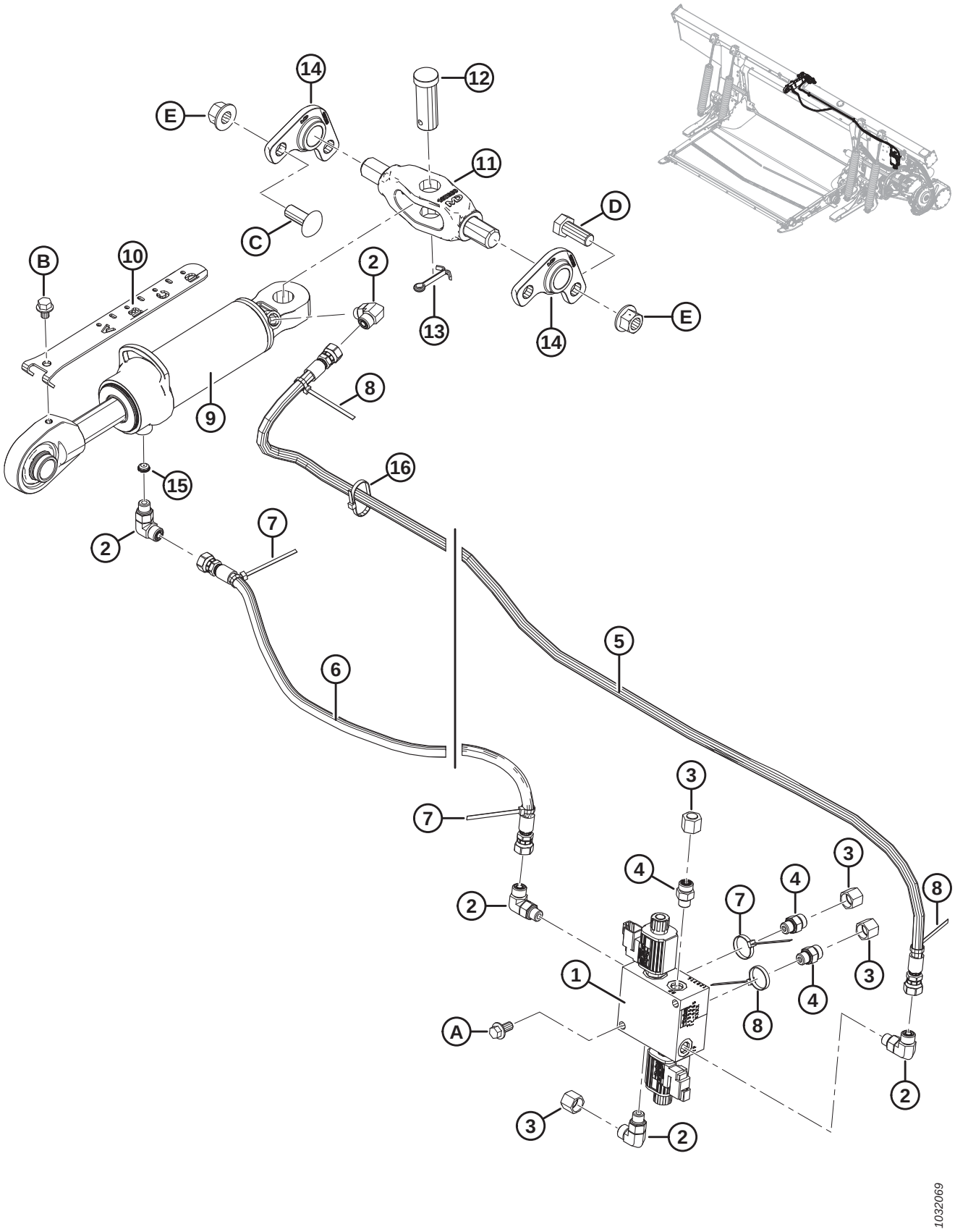

Ref	Part Number	Description	Qty	Serial Number
1	213363	MANIFOLD – SELECTOR VALVE	1	
	287449	COIL – 12VDC-.625 IN.		
	287450	VALVE – POPPET		
	287451	SEAL KIT – POPPET VALVE		
2	136095	FITTING – ELBOW 90° HYD	5	
	50219	O-RING – #6 ORB		
	135865	O-RING – #6 ORFS		
3	136325	CAP – HYD, SAE, 6 ORFS	4	
4	135778	FITTING – ADAPTER	3	
	50219	O-RING – #6 ORB		
	135865	O-RING – #6 ORFS		
5	213307	HOSE – HYD, TILT FORWARD	1	
6	311491	HOSE – HYD, TILT BACK	1	
	311750	KIT – TILT HOSE SERVICE [398]	A/R	–371189
7	40702	FASTENER – CABLE TIE, RED	3	
8	49227	FASTENER – CABLE TIE, GREEN	3	
9	187621	CYLINDER – TOP LINK	1	
	123978	SEAL KIT		
10	187637	INDICATOR – TILT	1	
11	187660	PIVOT – MACHINING	1	
12	135995	PIN – CLEVIS	1	
13	18609	PIN – COTTER 1/4 DIA X 2 ZP	1	
14	187730	CASTING – PIVOT	2	
15	252692	RESTRICTOR – #6 ORB X .065 IN.	1	
16	21763	FASTENER – CABLE TIE, BLACK	2	
A	152655	BOLT – HEX FLG HD M10 X 1.5 X 20-8.8-A3L		
B	30693	BOLT – FLANGE (SER FACE) .375-16 UNC X 0.50 LG		
C	136699	BOLT – RHSSN M16 X 2 X 40-8.8-AA3L		
D	111528	BOLT – HEX HD TFL M16 X 2 X 40-8.8-A3L		
E	136440	NUT – HEX FLG CTR LOC M16 X 2-10-A3L		

398. Tilt Hose Service kit (MD #311750) is used to service previous production. Kit includes tilt back hose (MD #311491) and installation instructions.

106 Hydraulics – Feed Deck

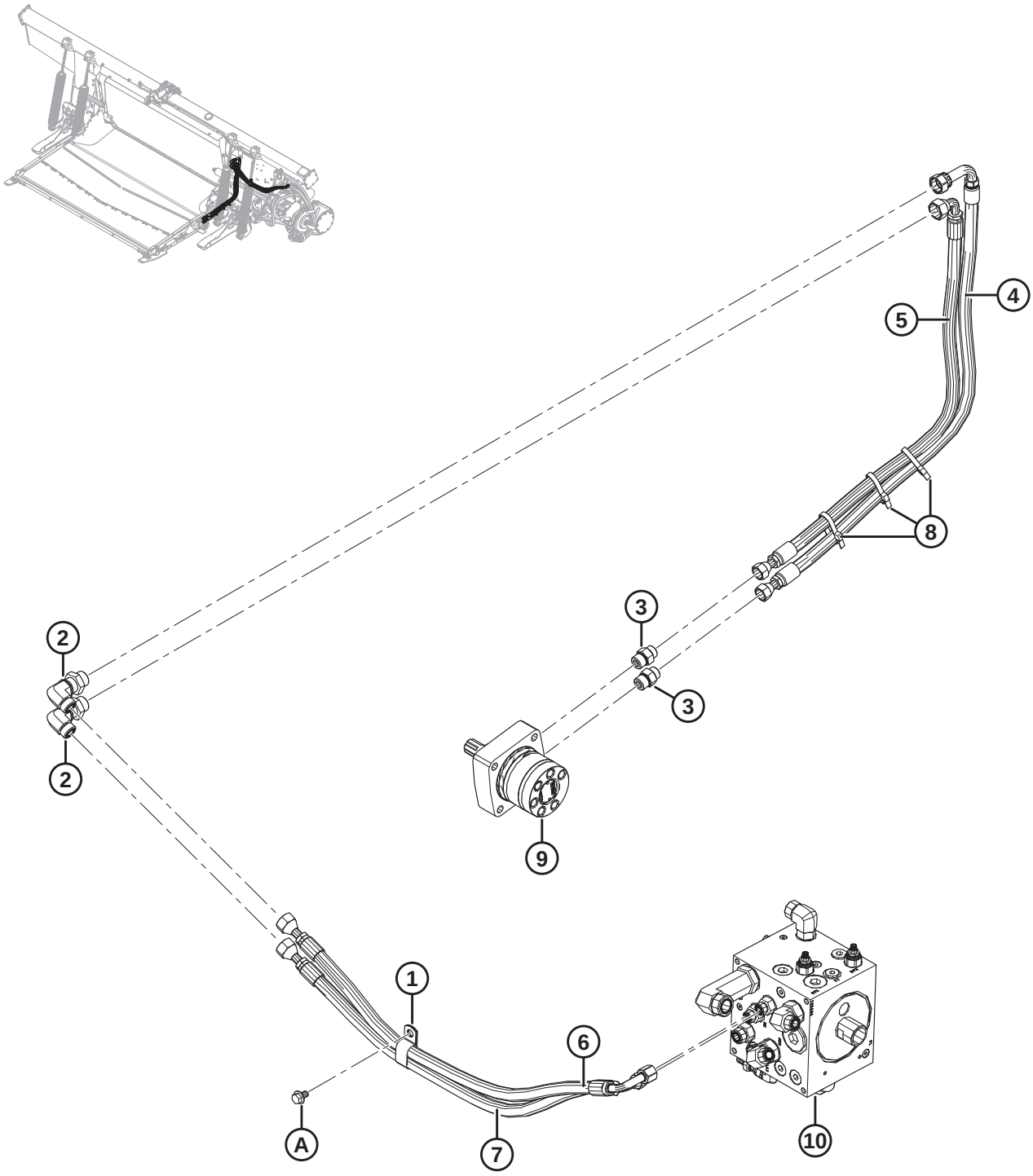

1020637

HYDRAULICS – FEED DECK

Ref	Part Number	Description	Qty	Serial Number
1	103738	CLAMP – PVC INSULATED 13/16 IN. TUBE SIZE	1	
2	136760	FITTING – ELBOW 90° BULKHEAD HYD 10-10	2	
	135867	O-RING – #10 ORFS		
3	184463	FITTING – ADAPTER 8 MORFS X 10 MORB	2	
	44210	O-RING – #10 ORB		
	135866	O-RING – #8 ORFS		
4	213827	HOSE – HYD, FEED DECK PRESSURE	1	
5	213828	HOSE – HYD, FEED DECK RETURN	1	
6	287912	HOSE – HYD, FEED DECK PRESSURE	1	
7	287913	HOSE – HYD, FEED DECK RETURN A	1	
8	30753	FASTENER – CABLE TIE (BLACK)	3	
9	REF	MOTOR – HYD [399]		
10	REF	MANIFOLD – DRIVE [400]		
A	136151	BOLT – HEX FLG HD TFL M10 X 1.5 X 16-8.8-A3L		

399. Refer to Section *86 Feed Deck – Draper Drive and Rollers, page 251*.
400. Refer to Section *108 Hydraulics – Drive Manifold Assembly, page 317*.

107 Hydraulics – Drives and Header Connection

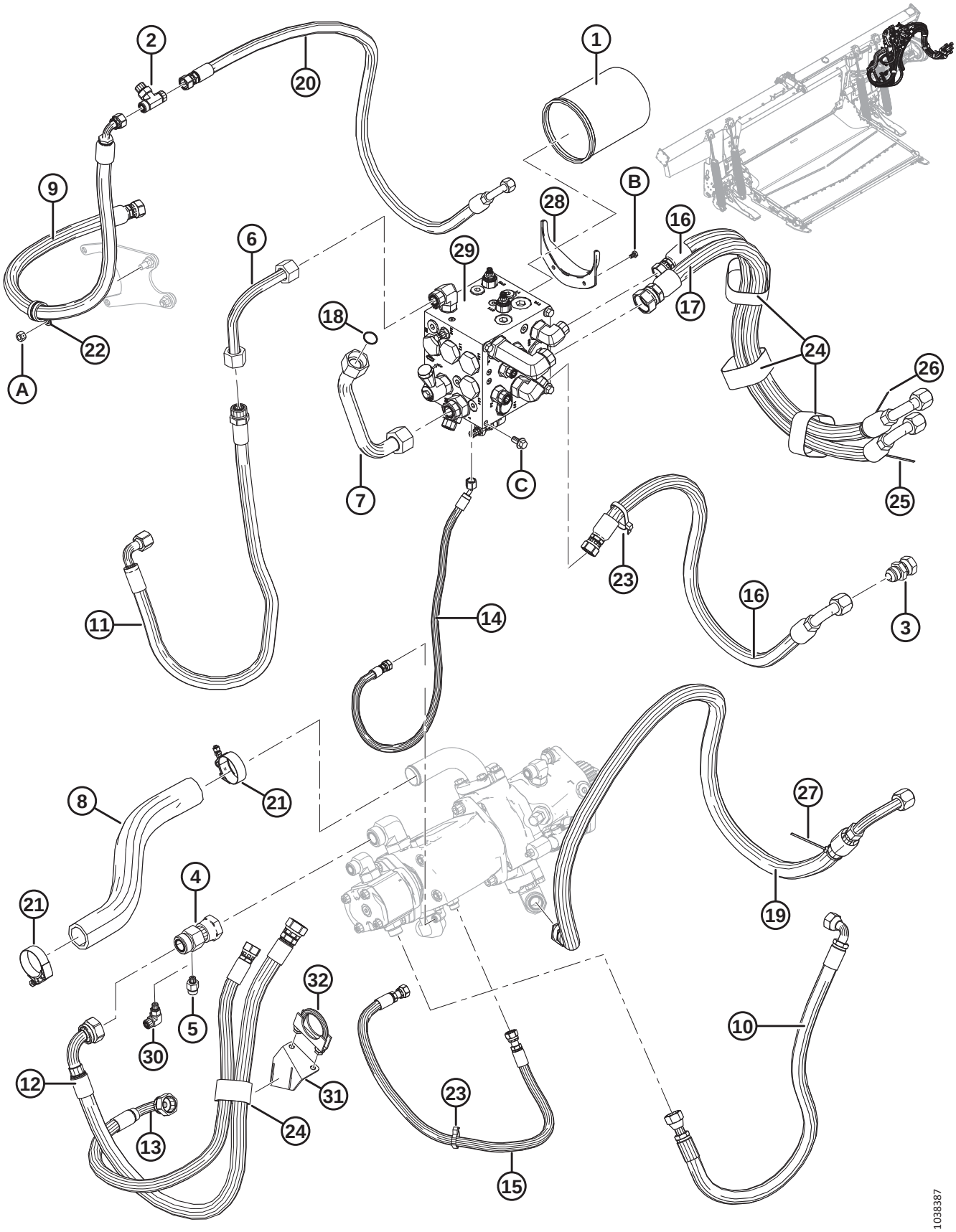

Ref	Part Number	Description	Qty	Serial Number
1	**320360**	**FILTER – HYD C/W 2X SEALS**	**1**	
2	136684	FITTING – BRANCH TEE ORFS 8-8-8	1	
	44209	O-RING – #8 ORB		
	135866	O-RING – #8 ORFS		
3	252414	FITTING – EXTENDER-EXPANDER 12-12	1	
4	252554	FITTING – TEE HYD, GAUGEPORT	1	
	135868	O-RING – #16 ORFS		
5	**135777**	**FITTING – ADAPTER** [401]	**1**	
	50223	O-RING – #4 ORB		
	135865	O-RING – #6 ORFS		
6	213329	LINE – HYD, S2	1	
7	294938	LINE – RETURN	1	
8	287911	HOSE – SUCTION	1	
9	213167	HOSE – CASE DRAIN (CD)	1	
10	213174	HOSE – HYD, GEAR PUMP PRESS (P2)	1	
11	**326240**	**HOSE – HYD, GEAR PUMP SUCTION (S2)**	**1**	
12	**326242**	**HOSE – HYD (S1)**	**1**	
13	**326243**	**HOSE – HYD (P1)**	**1**	
14	213864	HOSE – HYD (LS)	1	
15	276567	HOSE – HYD, CASE FLUSH	1	
16	287907	HOSE – HYD, FLX SD P AND R	2	
17	287908	HOSE – HYD, FLX KR	1	
18	135554	O-RING – #16 ORFS	1	
19	287910	HOSE – HYD, FLX KP	1	
20	287909	HOSE – HYD, FLX CD	1	
21	245753	CLAMP – T-BOLT	2	
22	209032	CLAMP – P-CLIP, INSULATED, 1 IN.	1	
23	30753	FASTENER – CABLE TIE (BLACK)	3	
24	170851	FASTENER – CINCH STRAP 10 IN. LG	**1**	
	295927	**FASTENER – CINCH STRAP 8 IN. LG**	**1**	
	135444	FASTENER – CINCH STRAP 6 IN. LG	**A/R**	
25	40702	FASTENER – CABLE TIE (RED)	1	
26	40703	FASTENER – CABLE TIE (BLUE)	1	
27	40704	FASTENER – CABLE TIE (ORANGE)	1	
28	213743	FLANGE – OIL DRAIN SPOUT	1	
29	REF	MANIFOLD – DRIVE [402]		
30	136337	FITTING – ELBOW 90° HYD [403]	1	
	50223	O-RING – #4 ORB		
	135865	O-RING – #6 ORFS		

401. Used on Bosch configurations only.
402. Refer to Section *108 Hydraulics – Drive Manifold Assembly, page 317*.
403. Used on Parker and Eaton configurations only.

HYDRAULICS – DRIVES AND HEADER CONNECTION

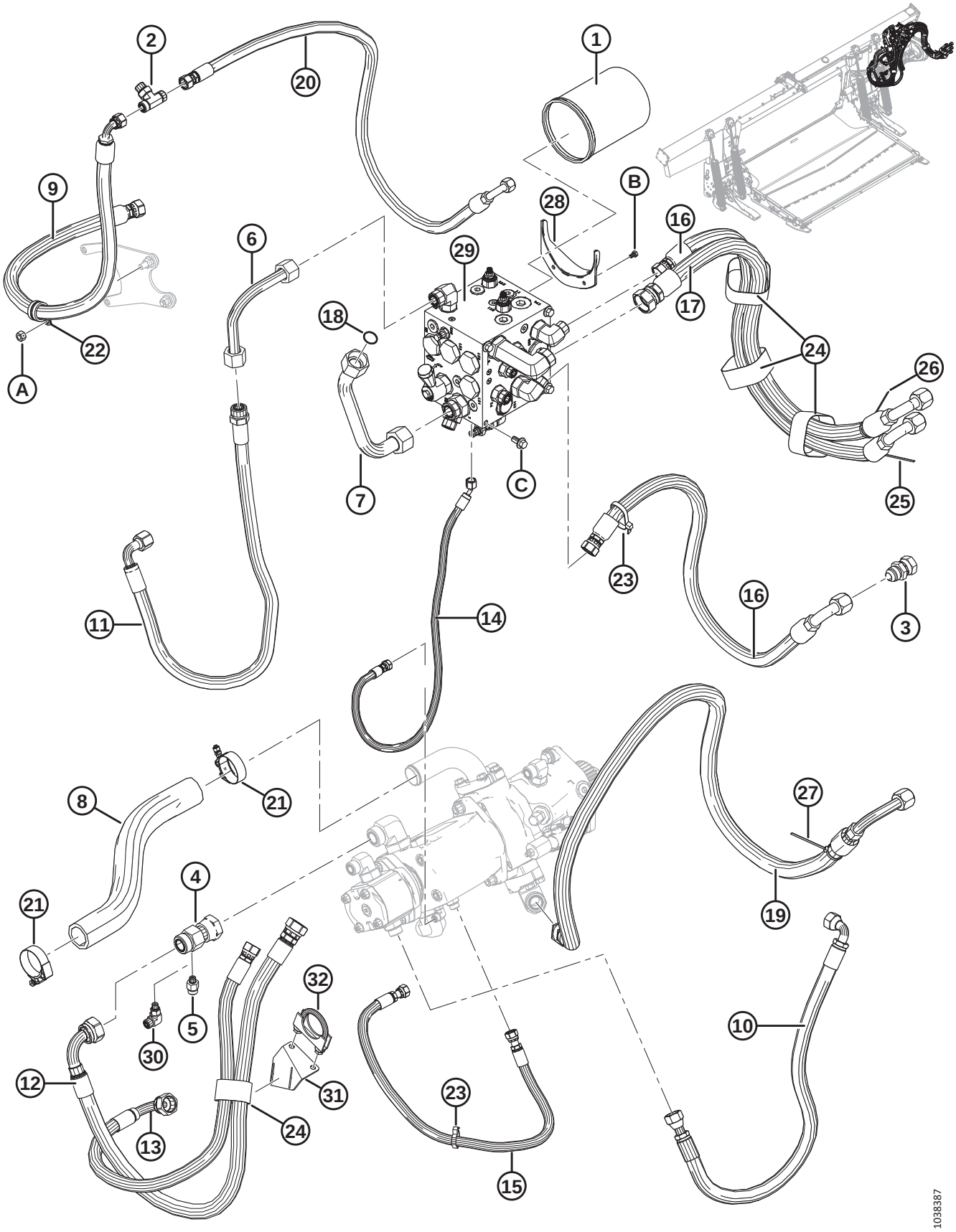

HYDRAULICS – DRIVES AND HEADER CONNECTION

Ref	Part Number	Description	Qty	Serial Number
31	**326231**	**BRACKET – HOSE SUPPORT** [404]	**1**	
32	**136110**	**CLAMP – U-BOLT** [405]	**1**	
A	135800	NUT – HEX CTR LOC SPCL M10 X 1.5-9-A3L		
B	136561	BOLT – HEX HD TFL M6 X 1 X 10-8.8-A3L		
C	152655	BOLT – HEX FLG HD M10 X 1.5 X 20-8.8-A3L		

404. Used to secure the hoses to the output shaft on Parker configurations.
405. Used to secure the hoses to the output shaft on Parker configurations. Comes with two flange nuts (MD #21452).

108 Hydraulics – Drive Manifold Assembly

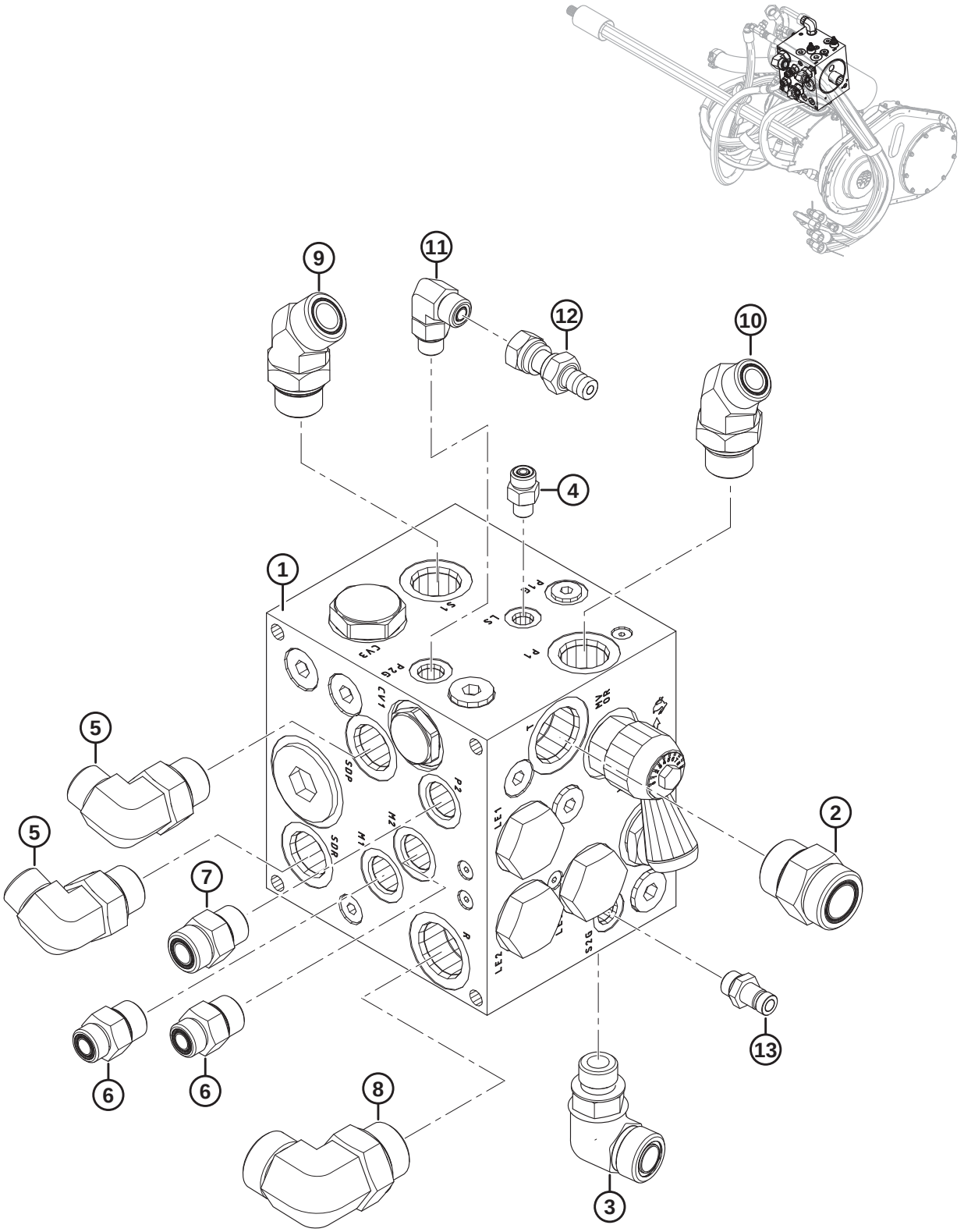

HYDRAULICS – DRIVE MANIFOLD ASSEMBLY

Ref	Part Number	Description	Qty	Serial Number
1	287771	ASSEMBLY – MANIFOLD, DRIVE [406]	1	
2	135791	FITTING – ADAPTER (T)	1	
	50220	O-RING – #20 ORB		
	135554	O-RING – #16 ORFS		
3	136303	FITTING – ELBOW 90° HYD (S2)	1	
	44210	O-RING – #10 ORB		
	135868	O-RING – #12 ORFS		
4	135775	FITTING – ADAPTER (LS)	1	
	50223	O-RING – #4 ORB		
	135957	O-RING – #4 ORFS		
5	136347	FITTING – ELBOW 90° HYD (SDP, SDR)	2	
	30971	O-RING – #12 ORB		
	135867	O-RING – #10 ORFS		
6	184463	FITTING – ADAPTER 8 MORFS X 10 MORB (M1, M2)	2	
	44210	O-RING – #10 ORB		
	135866	O-RING – #8 ORFS		
7	184461	FITTING – ADAPTER 10 MORFS X 10 MORB (P2)	1	
	44210	O-RING – #10 ORB		
	135867	O-RING – #10 ORFS		
8	135734	FITTING – ELBOW 90° HYD (R)	1	
	50220	O-RING – #16 ORB		
	135554	O-RING – #16 ORFS		
9	136418	FITTING – ELBOW 45° HYD (S1)	1	
	30971	O-RING – #12 ORB		
	135868	O-RING – #12 ORFS		
10	136458	FITTING – ELBOW 45° HYD (P1)	1	
	30971	O-RING – #12 ORB		
	135867	O-RING – #10 ORFS		
11	136095	FITTING – ELBOW 90° HYD (P2G)	1	
	50219	O-RING – #6 ORB		
	135865	O-RING – #6 ORFS		
12	252662	FITTING – NIPPLE HYD	1	
13	135587	NIPPLE – HYDRAULIC (S2G)	1	

406. For service parts, refer to Section *109 Drive Manifold Assembly – Service Parts, page 319*.

109 Drive Manifold Assembly – Service Parts

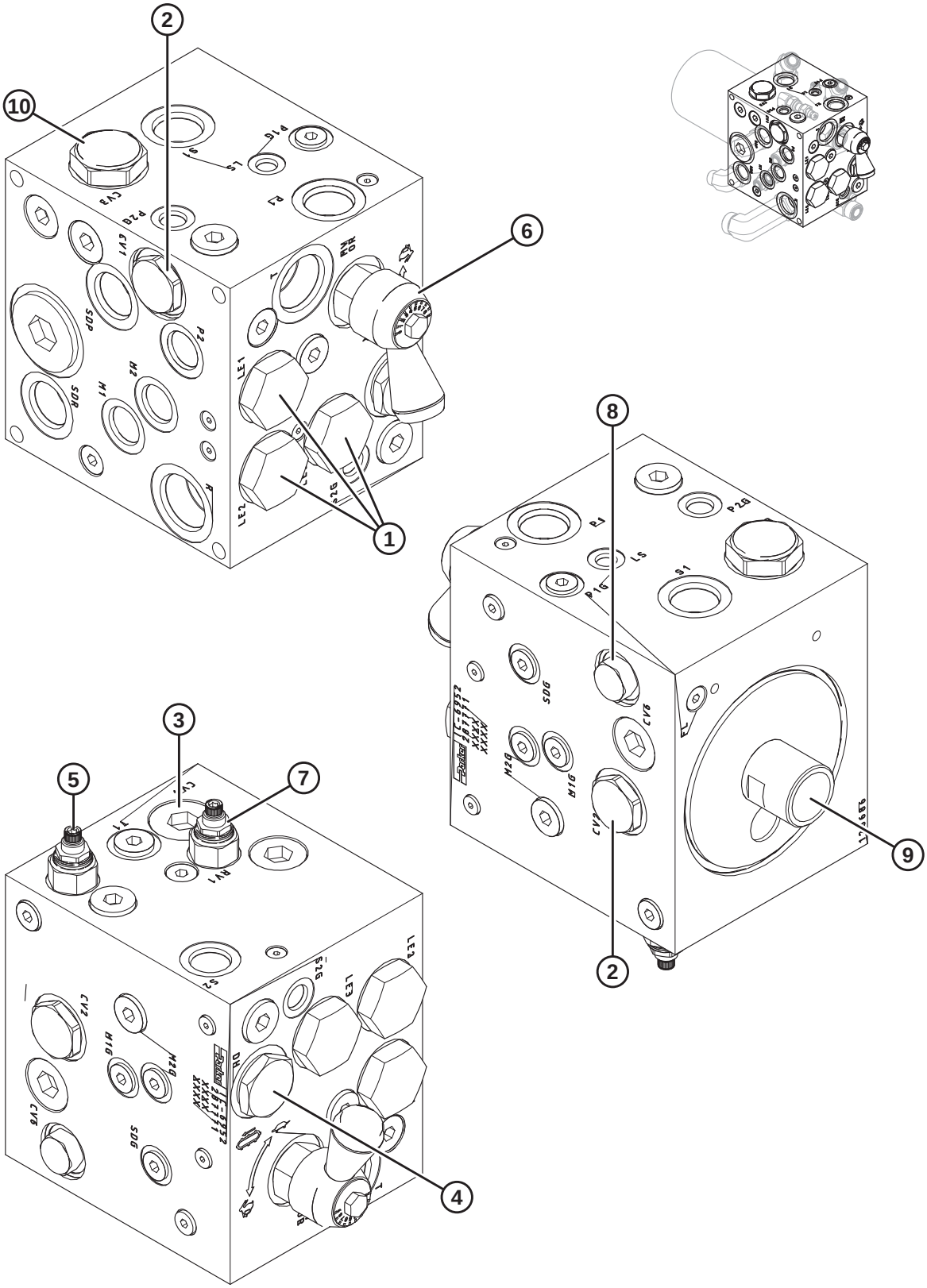

DRIVE MANIFOLD ASSEMBLY – SERVICE PARTS

Ref	Part Number	Description	Qty	Serial Number
	287771	ASSEMBLY – MANIFOLD, DRIVE [407]		
1	287466	VALVE – LOGIC ELEMENT-16 (LE1, LE2, LE3)	3	
	220963	SEAL KIT		
2	287467	VALVE – VENTED CHECK-12 (CV1, CV2)	2	
	220965	SEAL KIT		
3	287468	VALVE – BYPASS, 25 PSI (CV4) [408]	1	
4	287469	VALVE – DIVERTER (DH)	1	
	287473	SEAL KIT		
5	220951	VALVE – P.O. RELIEF, 2500 PSI (RV2)	1	
	220960	SEAL KIT		
6	287470	VALVE – NEEDLE (MVOR)	1	
	287193	HANDLE – FLOW CONTROL		
	220960	SEAL KIT		
7	287613	VALVE – RELIEF, 1500 PSI (RV1)	1	
	220960	SEAL KIT		
8	287471	VALVE – CHECK-08 (CV6)	1	
	220965	SEAL KIT		
9	245160	FITTING – FILTER ADAPTER	1	
10	287472	VALVE – CHECK REG-16, 8 PSI (CV3)	1	
	220961	SEAL KIT		

407. Refer to Section *108 Hydraulics – Drive Manifold Assembly, page 317*.
408. Bypass valve (MD #287468) is located underneath plug.

110 Selector Valve

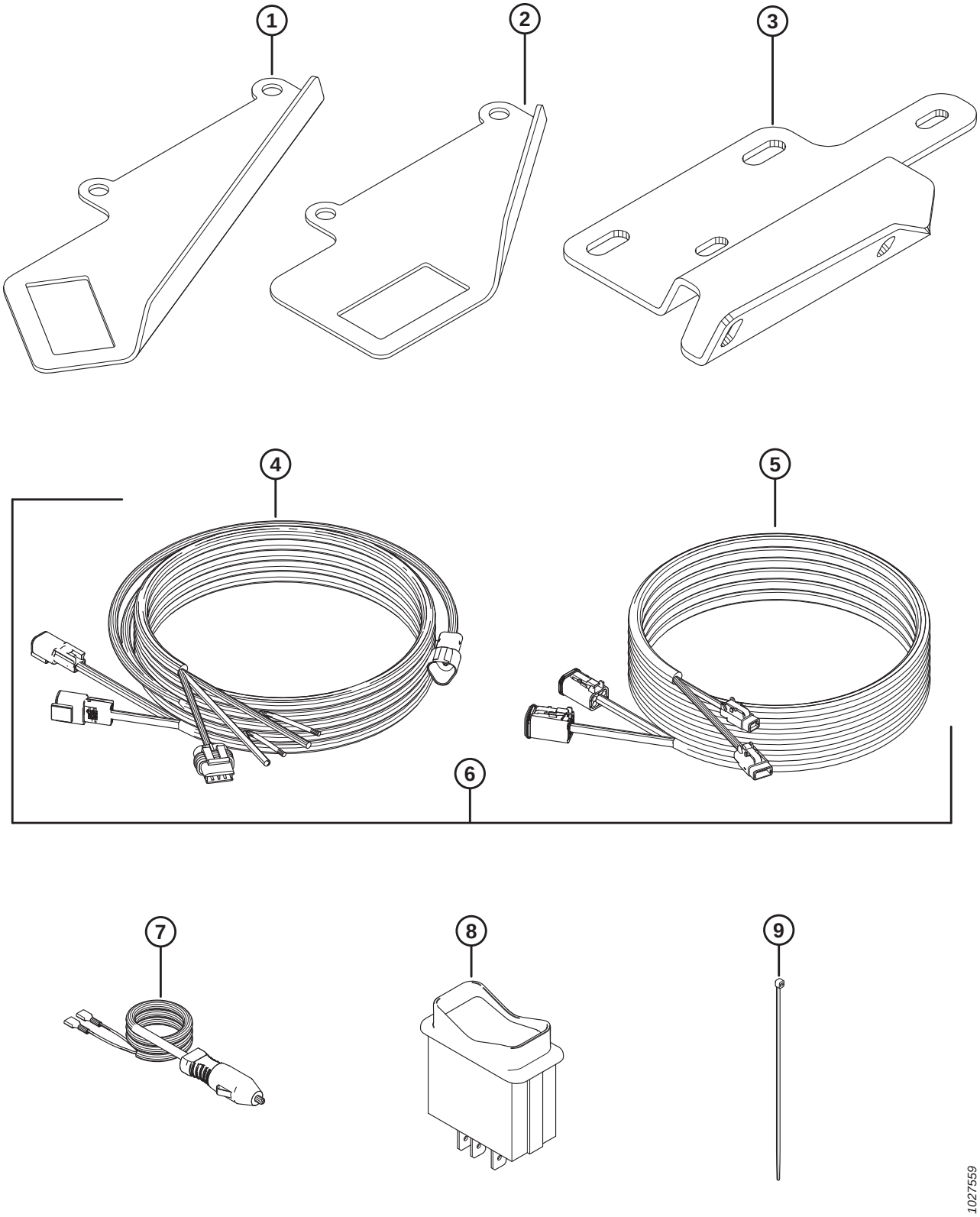

SELECTOR VALVE

Ref	Part Number	Description	Qty	Serial Number
1	158377	SUPPORT – ROCKER SWITCH, IN CAB MTG BRACKET FOR FORE-AFT/ HEADER TILT [409]	1	
2	220734	SUPPORT – ROCKER SWITCH-IN CAB MTG BRKT FOR FORE-AFT/ HEADER TILT SWITCH [410]	1	
3	304111	SUPPORT – TILT/DRAPER SPEED [410]	1	
4	304210	HARNESS – CAB DRAPER CONTROL [411]	1	
5	304211	HARNESS – CAB DRAPER EXTENSION [411]	1	
6	304216	KIT – CAB DRAPER CONTROL HARNESS [412]	A/R	–346189
7	220570	HARNESS – WIRING, CIGARETTE LIGHTER PLUG [413]	1	
8	109064	SWITCH – ROCKER, HEADER TILT/FORE-AFT [411]	1	
9	16661	FASTENER – NYLON TIE (BLACK)	12	

409. All combine models except CLAAS Lexion 500/700 Series and CNH/NH AFX, CX, and CR with integral switch.
410. John Deere 50 Series, S Series, and T Series only.
411. All combine models except CNH/NH AFX, CX, and CR with integral switch.
412. Kit is used to service model year 2018 and prior units with 2018 cab draper control harness (MD #213667). Includes cab draper control harness (MD #304210) and cab draper extension harness (MD #304211).
413. Optional on all combine models. Allows for install without hardwire.

111 Float Linkage and Components

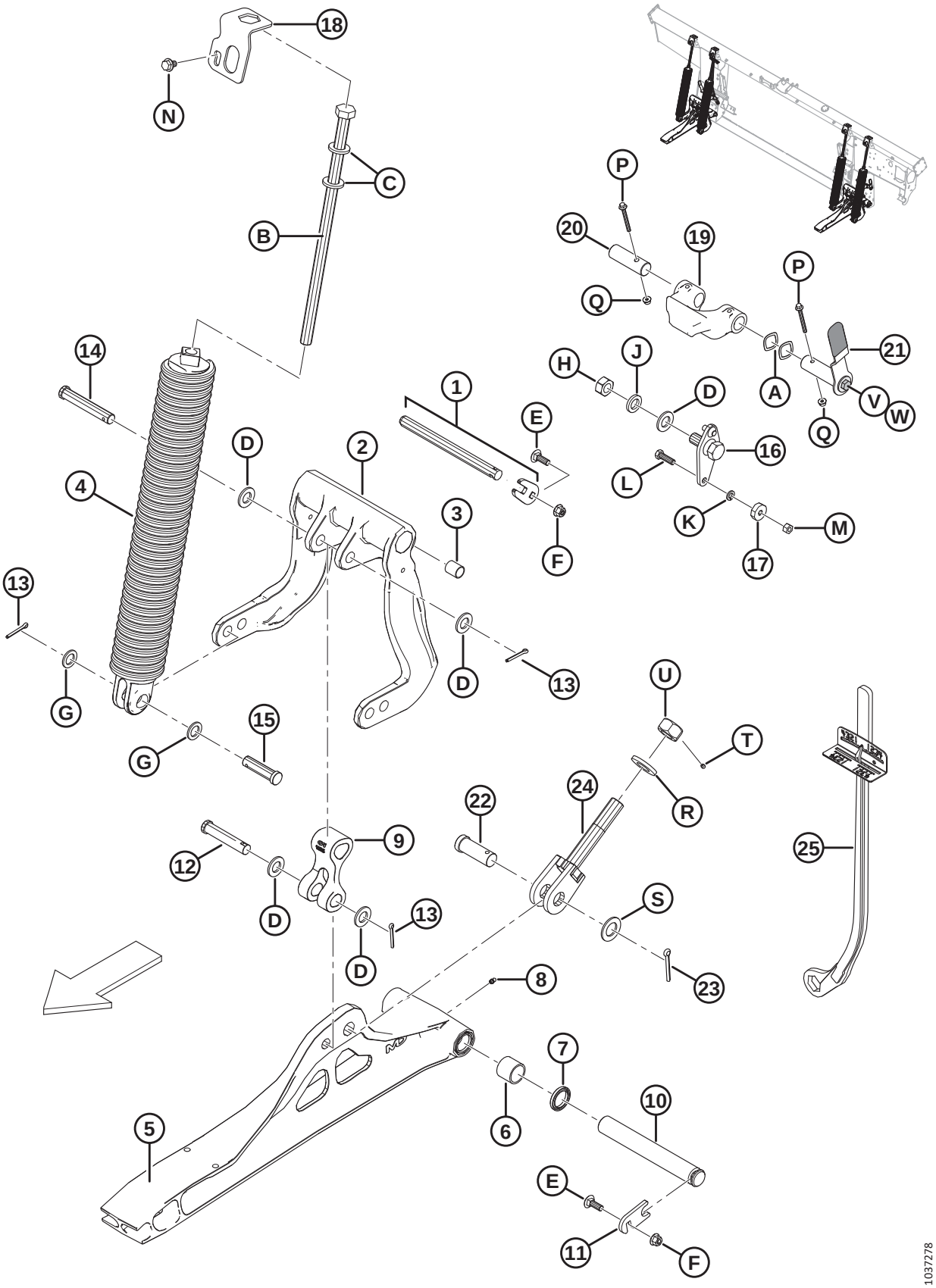

FLOAT LINKAGE AND COMPONENTS

Ref	Part Number	Description	Qty	Serial Number
1	**335743**	**KIT – PIN PIVOT** [414]	**2**	
2	156839	LEVER – BELLCRANK WITH BUSHINGS [415]	2	
3	156501	BUSHING – PLASTIC	4	
4	304034	SPRING ASSEMBLY [416]		
	304035	SPRING ASSEMBLY W/ INNER SPRING (HEAVY DUTY) [416]		
5	174816	LINK – LOWER, C/W BEARINGS [417]	2	
6	100500	BEARING – NEEDLE	4	
7	113222	SEAL	4	
8	18671	FITTING – LUBE 1/4-28 UNF	2	
9	156574	LINK – ARM	2	
10	248261	PIN	2	
11	212250	PLATE – PIN LOCK	2	
12	20312	PIN – CLEVIS	2	
13	18608	PIN – COTTER 3/16 DIA X 1.5 ZP	8	
14	156741	PIN – CLEVIS	2	
15	30463	PIN – CLEVIS	4	
16	125654	PIVOT – FLOAT WELDMENT	2	
17	18867	BEARING – BALL CYL OD C/W TWO SEALS	2	
18	213821	LOCK – SPRING	4	
19	301513	DOWNSTOP – CASTING, MACHINED	2	
20	240455	PIN – PIVOT	2	
21	322145	HANDLE ASSY – FLOAT LOCK [418]	2	
	287701	GRIP – HANDLE		
22	135995	PIN – CLEVIS	2	
23	18609	PIN – COTTER 1/4 DIA X 2 ZP	2	
24	220679	BOLT – WELDT	2	
25	311859	TOOL – WRENCH WELDMENT	1	
A	252564	WASHER – WAVE		
B	252198	BOLT – HEX HD M20 X 2.5 X 450 X SPCL-8.8-A3L		
C	21540	WASHER – HARDENED		
D	18601	WASHER – SAE FLAT 13/16 I.D. X 1.5 IN. O.D. ZP		
E	184662	BOLT – RHSN TFL M10 X 1.5 X 30-8.8-A3L		
F	135799	NUT – HEX FLG CTR LOC M10 X 1.5-10-A3L		
G	1709	WASHER – FLAT		
H	102636	NUT – HEX DT .750-10 UNC SIDE LOCK		
J	18640	WASHER – REG. LOCK 3/4 IN. NOM. I.D. ZP		

414. Kit includes plate and pivot pin.
415. Includes two plastic bushings (MD #156501).
416. There are four springs on each float module, but the combination of springs (MD #304034 and MD #304035) varies depending on header size. 40–45 foot headers require 3 x 304034 and 1 x 304035 on the outboard RHS, all smaller headers require 4 x 304034. Springs are mounted in the rear mounting holes of bell crank lever (MD #156839) for FD125 headers.
417. Includes two needle bearings (MD #100500), two seals (MD #113222), and lube fitting (MD #18671).
418. Includes handle grip (MD #287701), bolt (MD #30627), and washer (MD #184712).

FLOAT LINKAGE AND COMPONENTS

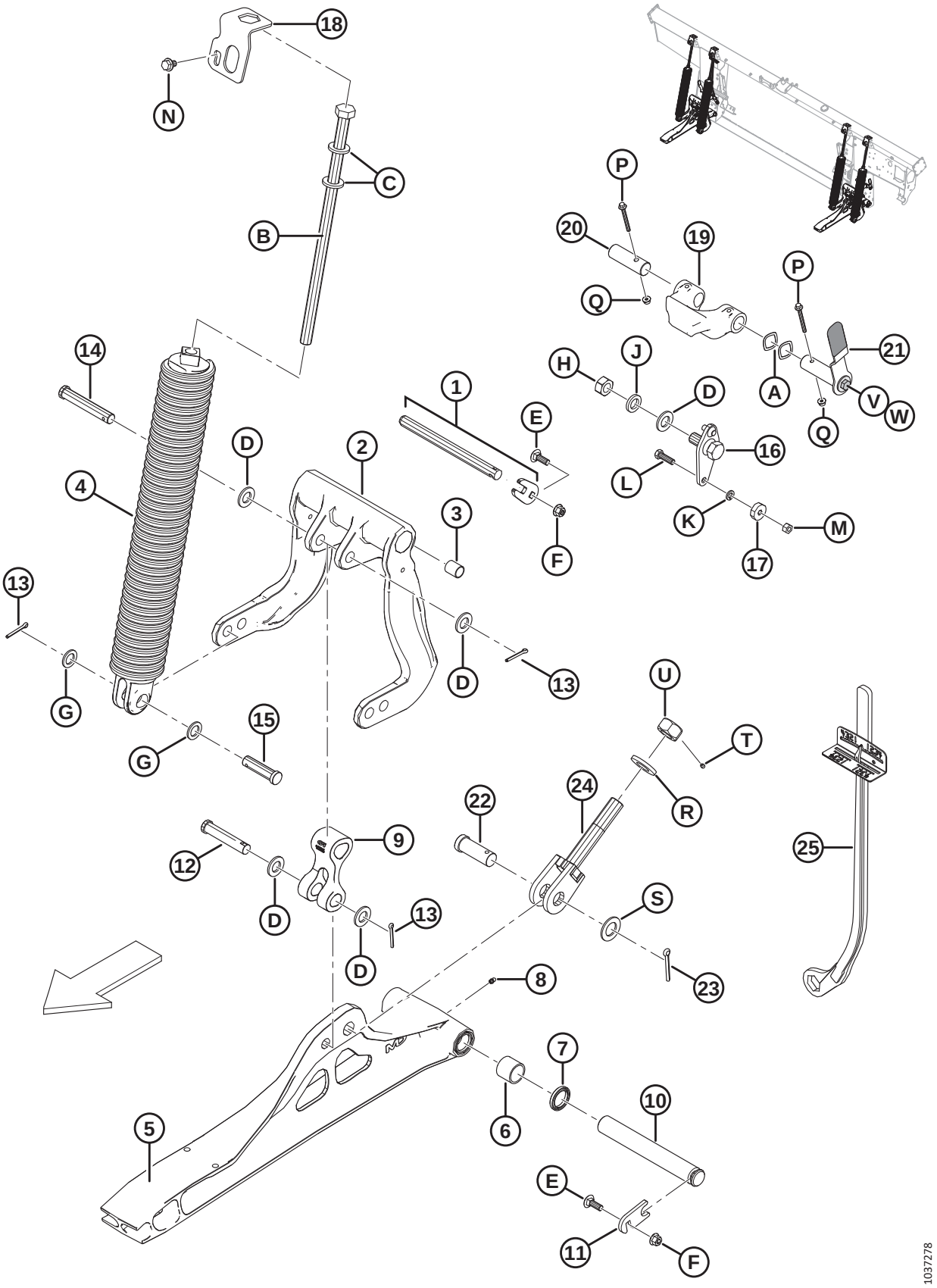

FLOAT LINKAGE AND COMPONENTS

Ref	Part Number	Description	Qty	Serial Number
K	18637	WASHER – REG. LOCK 3/8 IN. NOM. I.D. ZP		
L	21264	BOLT – HH 3/8 NC X 1.25 LG GR 5 ZP		
M	18669	NUT – HEX LK DT 3/8-16 UNC GR 5 AA1J		
N	136151	BOLT – HEX FLG HD TFL M10 X 1.5 X 16-8.8-A3L		
P	136704	BOLT – HEX FLG HD M6 X 1 X 60-8.8-AA2L		
Q	152668	NUT – HEX FLG CTR LOC M6 X 1-8-A2L		
R	31774	WASHER – FLAT		
S	156743	WASHER – FLAT		
T	136596	SCREW – SET, HEX NYL TIP 1/4-20 X 1/4-AS-ZNPL		
U	133047	NUT – DOWNSTOP MACHINING		
V	30627	BOLT – HEX HD TFL M10 X 1.5 X 25-8.8-A3L		
W	184712	WASHER – FLAT LARGE M10-200HV		

112 Float Indicator and Auto Header Height Control

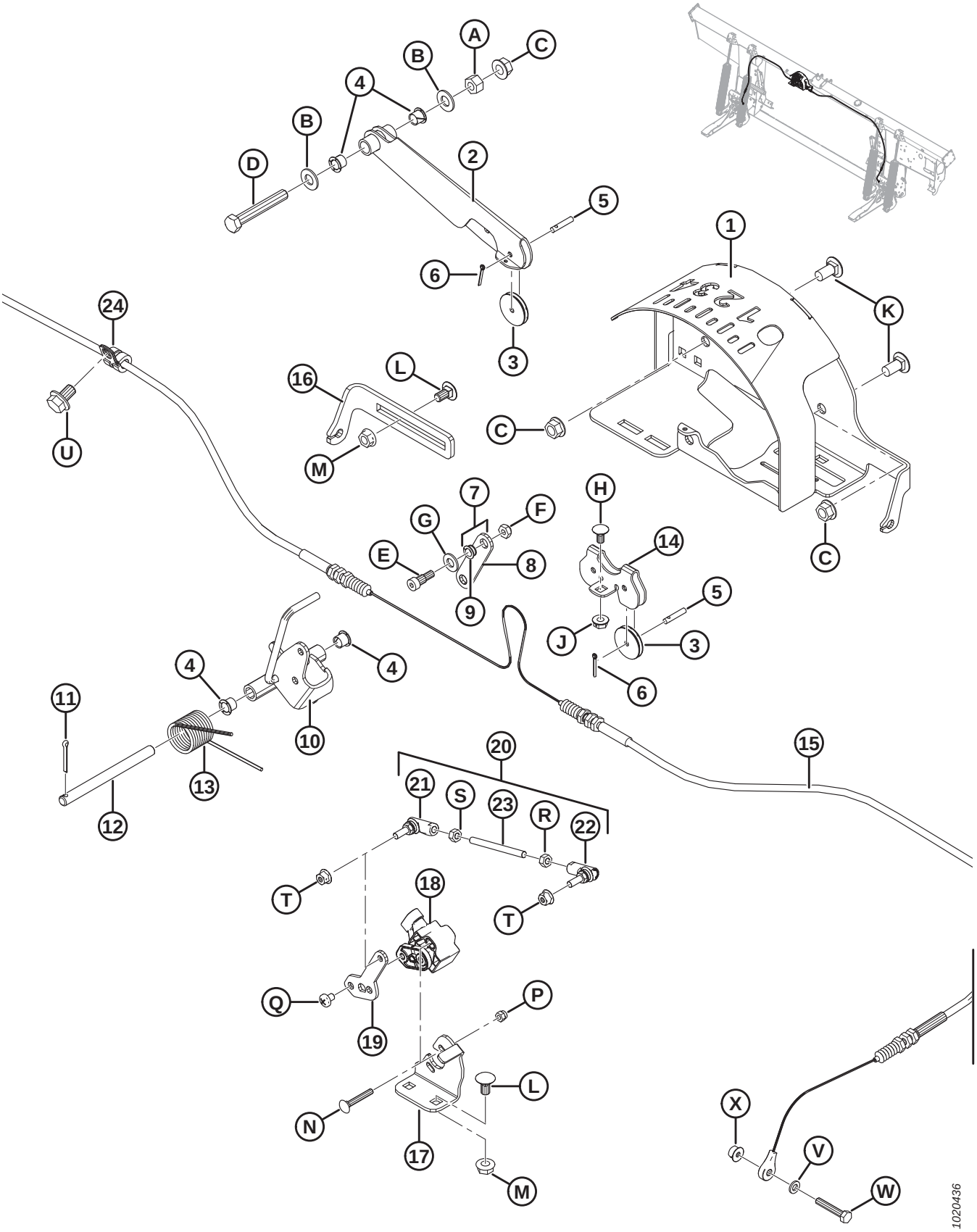

FLOAT INDICATOR AND AUTO HEADER HEIGHT CONTROL

Ref	Part Number	Description	Qty	Serial Number
1	187641	HOUSING – INDICATOR WELDT	1	
2	187655	ARM – INDICATOR WELDT	1	
3	187653	PULLEY – CONTROL	3	
4	276381	BUSHING – PLASTIC	4	
5	276863	PIN – STRAIGHT	3	
6	18604	PIN – COTTER 3/32 DIA X 3/4 ZP	3	
7	187694	LINK – INDICATOR CW BUSHINGS [419]	1	
8	187659	LINK – INDICATOR	1	
9	156969	BUSHING – PLASTIC	2	
10	304674	INDICATOR – POINTER ASSEMBLY	1	
11	18605	PIN – COTTER 1/8 DIA X 1 ZP	1	
12	276281	PIN – STRAIGHT	1	
13	156843	SPRING – TORSION	1	
14	187708	SUPPORT – INDICATOR PULLEYS	1	
15	187658	CABLE – FLOAT INDICATOR	1	
16	276298	SUPPORT – AHHC CABLE ADJUSTER	1	
17	276043	SUPPORT – SENSOR MOUNT	1	
18	248643	SENSOR – ROTARY, DUAL OUTPUT	1	
19	276044	ARM – SENSOR	1	
20	276057	LINKAGE ASSEMBLY [420]	1	
21	291485	BALL JOINT – LH THREAD	1	
22	291484	BALL JOINT – RH THREAD	1	
23	232650	ROD – THREADED	1	
24	136410	CLAMP – INSULATED 3/8 INCH	1	
A	18590	NUT – HEX 3/8-16 UNC GR 5 ZP		
B	18598	WASHER – SAE FLAT 13/32 I.D. X 13/16 IN. O.D. ZP		
C	30228	NUT – FLANGE DT SMTH FACE 0.375-16 UNC		
D	21102	BOLT – HH 3/8 NC X 2.5 LG GR 5 ZP		
E	135423	BOLT – SHOULDER 5/16 DIA X 3/8 X 1/4-20 UNRC		
F	18724	NUT – HEX LOCK DT 1/4-20 UNC ZP		
G	18597	WASHER – SAE FLAT 11/32 I.D. X 11/16 IN. O.D. ZP		
H	21926	BOLT – RHSN 1/4-20 X .5 GR 5 ZP		
J	135248	NUT – FLG SMTH FACE 1/4-20 NC GR 5 ZP CTR LK DT		
K	21863	BOLT – RHSSN 3/8 NC X 0.75 LG GR 5 ZP		
L	135305	BOLT – RHSN 5/16-18 X .63 GR 5 ZP		
M	30280	NUT – FLG SIDE LK SMTH FACE 5/16 NC GR 5 ZP		
N	197229	BOLT – RHSN M5 X 0.8 X 35-4.6-A2L		
P	197230	NUT – HEX NYLOC M5 X 0.8-8-A2L		
Q	158704	SCREW – PAN HD M6 X 1 X 8-4.8-A2L		
R	184683	NUT – HEX ISO 4032 M6 X 1-8-A2L		
S	136613	NUT – HEX LH ISO 4032 M6 X 1-8-A2L		

419. Includes link (MD #187659) and two bushings (MD #156969).
420. Includes ball joints (MD #291484, 291485), threaded rod (MD #232650), and hardware.

FLOAT INDICATOR AND AUTO HEADER HEIGHT CONTROL

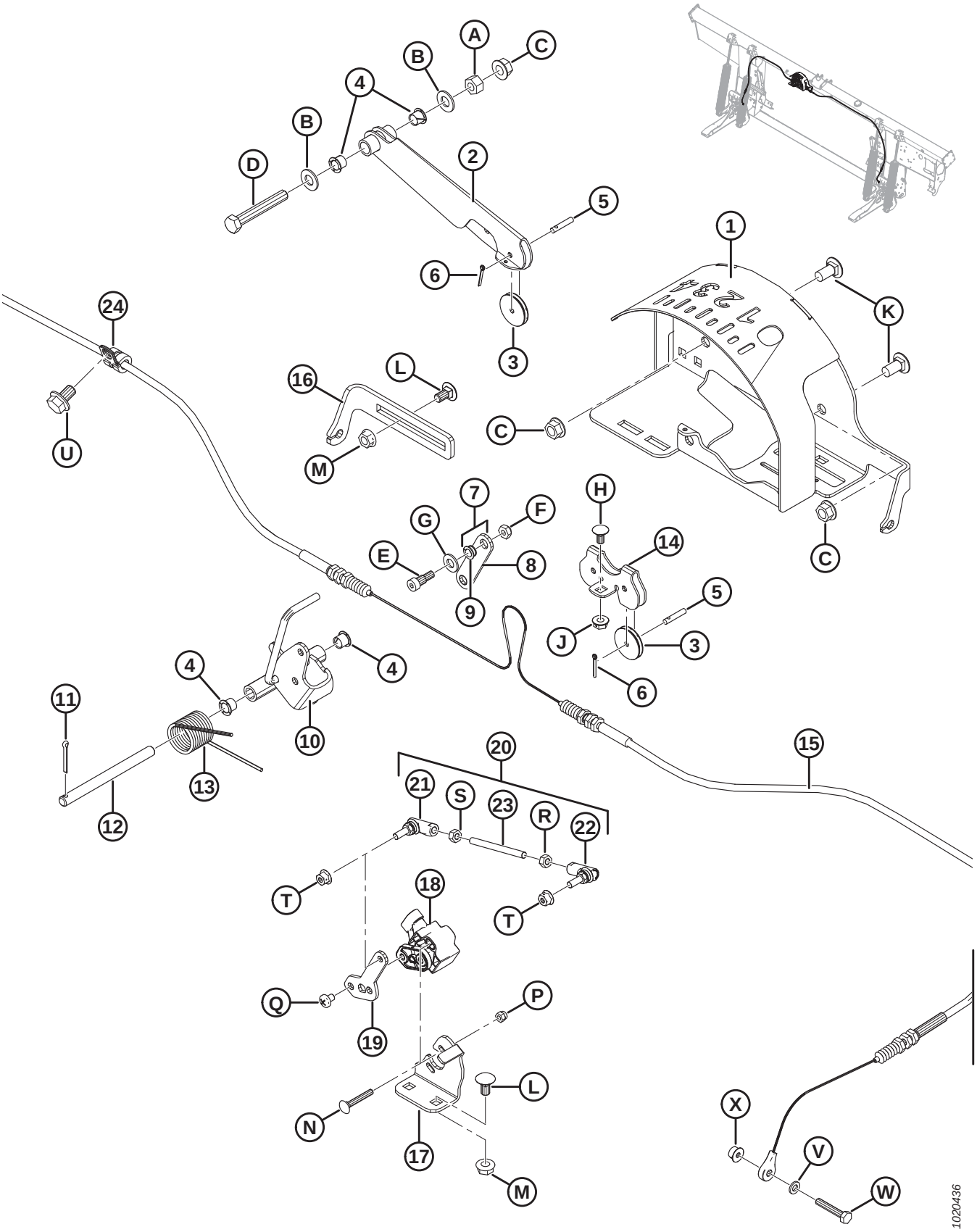

Ref	Part Number	Description	Qty	Serial Number
T	152668	NUT – HEX FLG CTR LOC M6 X 1-8-A2L		
U	136151	BOLT – HEX FLG HD TFL M10 X 1.5 X 16-8.8-A3L		
V	184705	WASHER – FLAT M6-200HV-A2L		
W	109613	BOLT – HEX HD TFL M6 X 1 X 35-8.8-A2L		
X	152668	NUT – HEX FLG CTR LOC M6 X 1-8-A2L		

113 Electrical Components – FM100

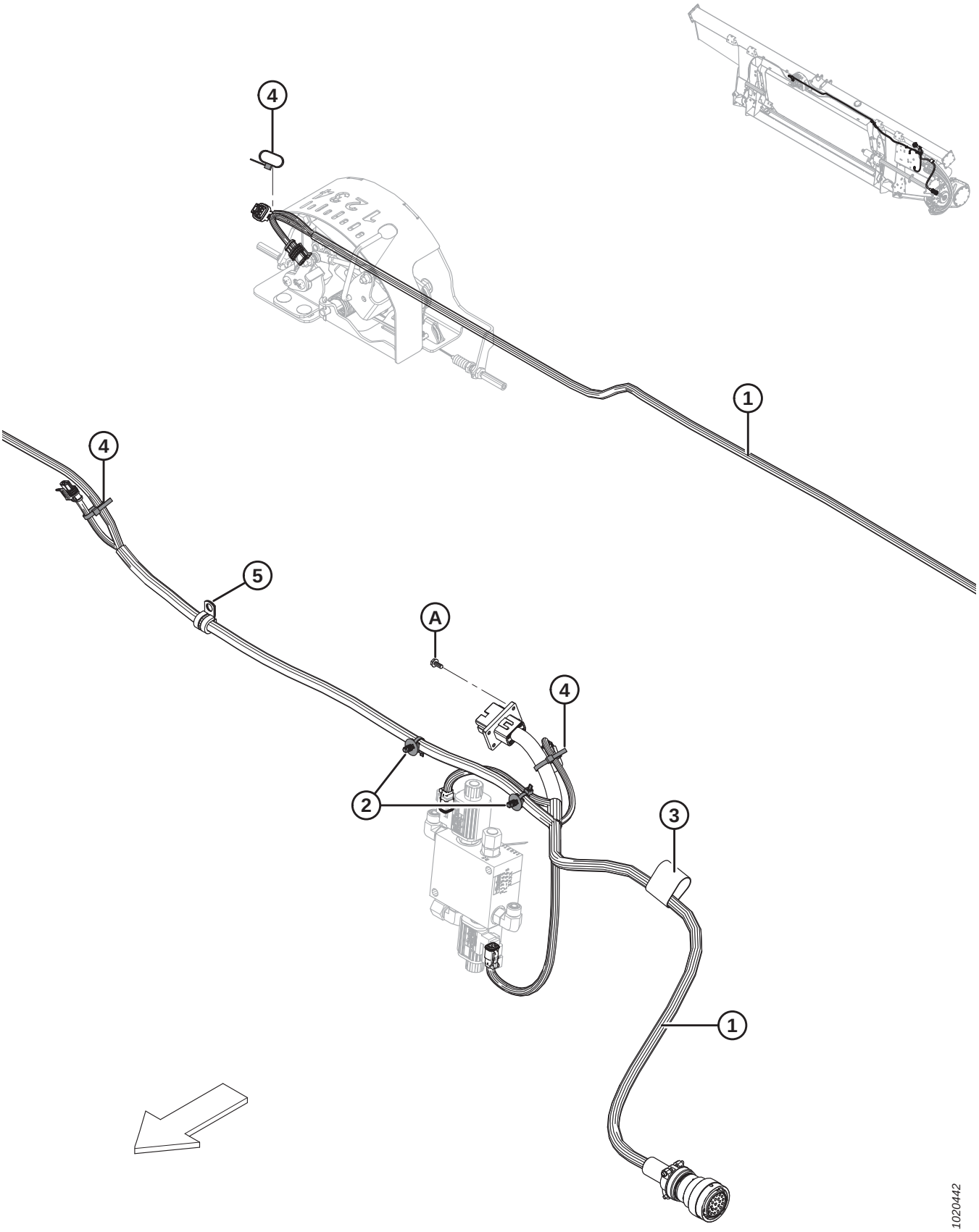

ELECTRICAL COMPONENTS – FM100

NOTE:

For specific electrical harness parts, refer to Electrical Connector Parts Catalog (MD #169641).

Ref	Part Number	Description	Qty	Serial Number
1	283613	HARNESS – FM100, MAIN	1	
	134746	CONNECTOR – CAP, PLUG, 12-WAY [421]		
2	136655	FASTENER – FIR TREE MT W/ TIE	2	
3	135443	FASTENER – CINCH STRAP 4 IN. LG	1	
4	21763	FASTENER – CABLE TIE (BLACK)	3	
5	135818	CLAMP – INSULATED 1/2 INCH	1	
A	42292	SCREW – SELF TAPPING HEX WASH HD #10 X 1/2 ZP		

421. Cap (MD #134746) is used to protect connector C1A for float modules that are not fully assembled.

114 Decals – FM100

1

2

3

4

5

6

7

8

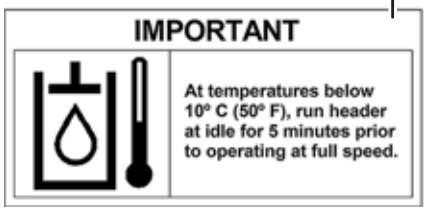

9

10

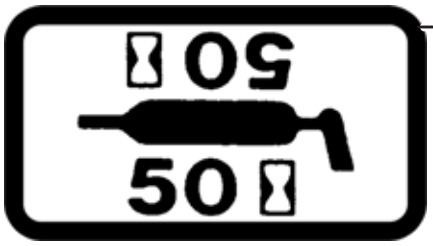

11

12

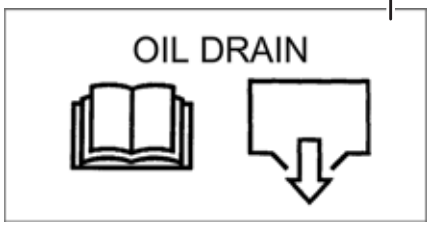

13

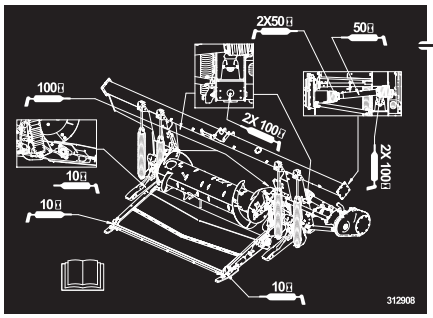

14

15

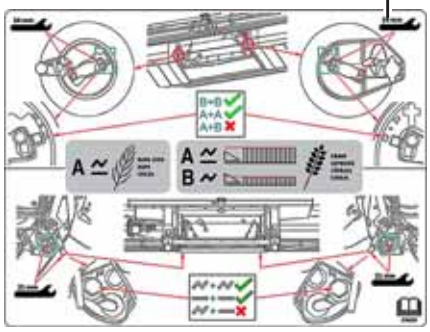

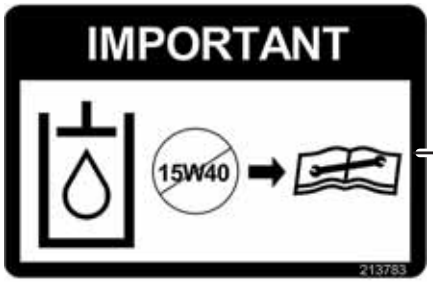

16

17

18

[redacted]

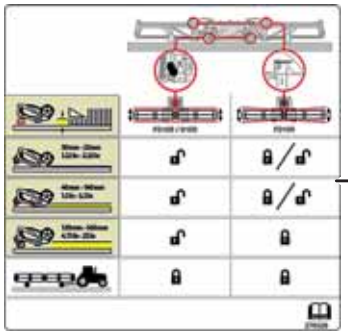

19

1037261

DECALS – FM100

Ref	Part Number	Description	Qty	Serial Number
1	30316	DECAL – DANGER (ROTATING DRIVELINE)		
2	36651	DECAL – DANGER (DRIVELINE GUARD MISSING)		
3	165218	DECAL – WING LOCKOUT		
4	44611	DECAL – DANGER (HEADER HAZARD)		
5	174436	DECAL – HIGH PRESSURE FLUID		
6	302204	DECAL – CA PROPOSITION 65		
7	194521	DECAL – WARNING (DRIVELINE CE)		
8	133086	DECAL – IMPORTANT: OIL OPERATING TEMPERATURE		
9	32070	DECAL – PATENT NUMBER		
10	23165	DECAL – 50 HR LUBE		
	23163	**DECAL – 10 HR LUBE**		
11	213781	DECAL – ADAPTER OIL LEVEL		
12	133537	DECAL – ADAPTER OIL DRAIN		
13	**312908**	**DECAL – GREASE, FM100**		
14	287702	DECAL – FLOAT LOCK, LH		
	287705	DECAL – FLOAT LOCK, RH		
15	276259	DECAL – RTD SETTINGS		
16	213783	DECAL – OIL, IMPORTANT		
17	252996	DECAL – SAFETY FLUID SPRAY		
18	140225	STRIP – ANTI SLIP (LARGE)		
	174131	STRIP – ANTI SLIP (SMALL)		
19	276326	DECAL – HEADER ADJUSTMENT		

115 AGCO Challenger/Massey Ferguson – Float Module Completion

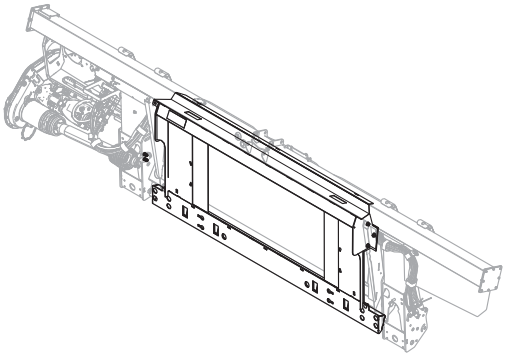

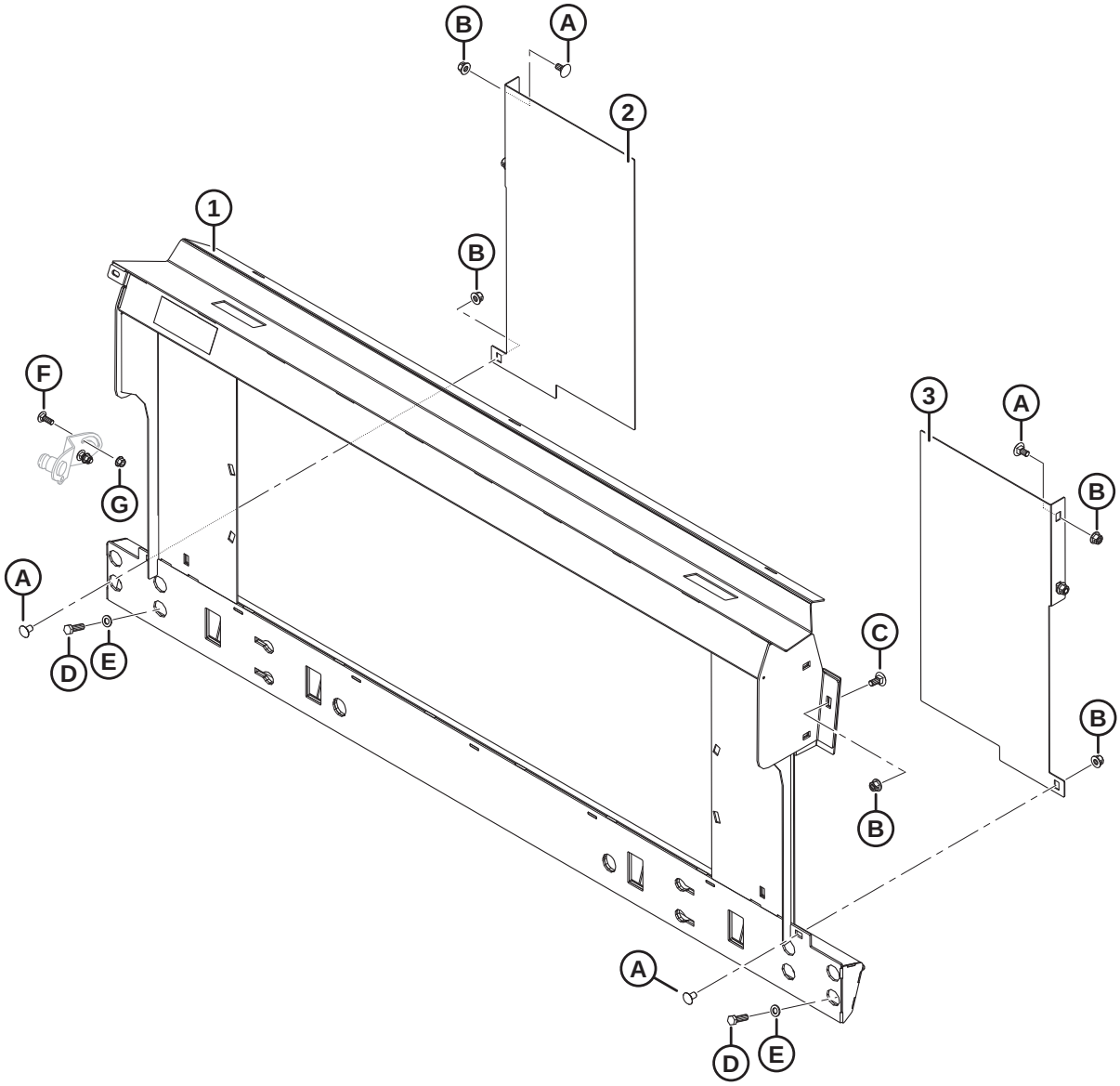

AGCO CHALLENGER/MASSEY FERGUSON – FLOAT MODULE COMPLETION

Ref	Part Number	Description	Qty	Serial Number
	B6965	**COMP PKG – AGCO, MASSEY CHALLENGER** [422]		
1	133672	FRAME – AGCO TRANSITION LATERAL TILT C/W DECAL	1	
2	133980	FILLER – LH, A65/660/9690	1	
3	133981	FILLER – RH, A65/660/9690	1	
A	136625	BOLT – HEX SER FLG HD M12 X 1.75 X 25 X SPCL-100-AA1J		
B	136431	NUT – HEX FLG CTR LOC M12 X 1.75-10-A3L		
C	184667	BOLT – RHSN M12 X 1.75 X 30-8.8-A3L		
D	152730	BOLT – HEX HD TFL M12 X 1.75 X 35-10.9-AA1J		
E	184714	WASHER – FLAT REG M12-300HV-A3L		
F	184662	BOLT – RHSN TFL M10 X 1.5 X 30-8.8-AA1J		
G	135799	NUT – HEX FLG CTR LOC M10 X 1.5-10		

422. AGCO Challenger/Massey Ferguson completion package includes float module, hydraulic, and electrical completion packages required to complete a stand-alone FM100 or to convert to an existing factory-installed FM100. Kits available through Whole Goods only.

116 AGCO Gleaner – Float Module Completion

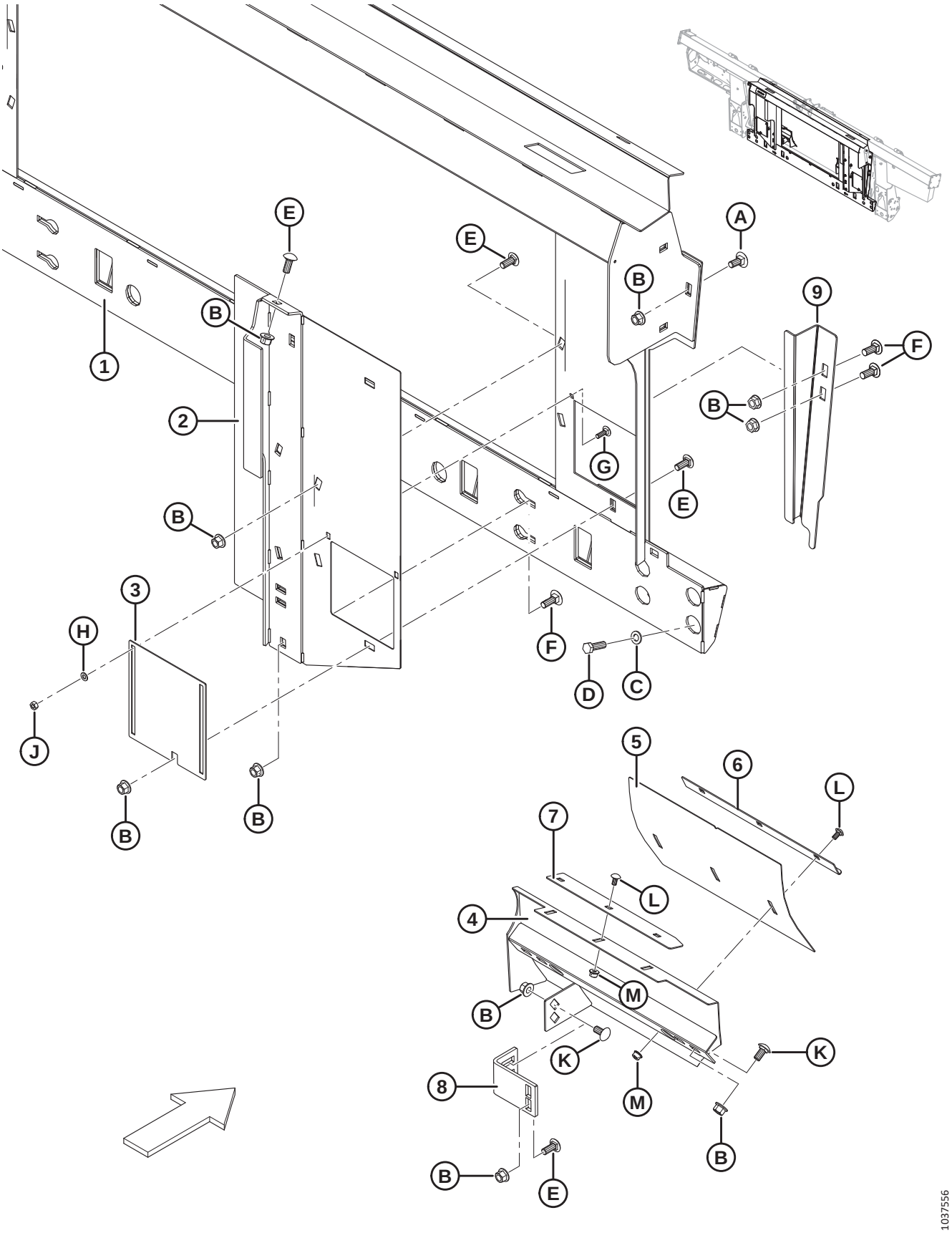

AGCO GLEANER – FLOAT MODULE COMPLETION

Ref	Part Number	Description	Qty	Serial Number
	B6964	**COMP PKG – AGCO, GLEANER** [423]		
1	245852	FRAME – GLEANER R/S C/W DECAL	1	
2	245816	FILLER – RH WELDMENT	1	
	245815	FILLER – LH WELDMENT	1	
3	245763	DOOR – ACCESS	2	
4	213834	DEFLECTOR – WELDT RH GLEANER	1	
	213833	DEFLECTOR – WELDT LH GLEANER	1	
5	213843	DEFLECTOR – ADJUSTING PANEL	2	
6	213844	ANGLE – STRIPPER	2	
7	213845	STRIPPER	2	
8	276289	FILLER BRACKET	2	
9	**337943**	**FILLER – BRACKET RH**	**1**	
	337941	**FILLER – BRACKET LH**	**1**	
A	184667	BOLT – RHSN M12 X 1.75 X 30-8.8-A3L		
B	50186	NUT – FLG LK SM FACE DT 1/2-13 UNC-GR5-AA1J		
C	184714	WASHER – FLAT REG M12-300HV-A3L		
D	152730	BOLT – HEX HD TFL M12 X 1.75 X 35-10.9-AA1J		
E	21868	BOLT – RHSSN 1/2-13 X 1.0 GR5 AA1J		
F	21471	BOLT – RHSN 1/2-13 X 1.25 GR5 AA1J		
G	21282	BOLT – RHSN 5/16-18 X 1-GR5-AA1J		
H	184572	WASHER – USS FLAT 1/4 IN. NOM		
J	18589	NUT – HEX 5/16-18 UNC GR 5 ZP		
K	152439	BOLT – RHSSN M12 X 1.75 X 25-8.8-A3L		
L	191489	BOLT – RHSSN TFL M8 X 1.25 X 16-8.8-A2L		
M	135337	NUT – HEX FLG CTR LOC M8 X 1.25-8-A2L		

423. AGCO Gleaner Completion Package includes float module, feed auger, hydraulic, and electrical completion packages required to complete a stand-alone FM100 or to convert to an existing factory-installed FM100. Kits available through Whole Goods only.

117 AGCO Gleaner – Feed Auger Conversion Parts

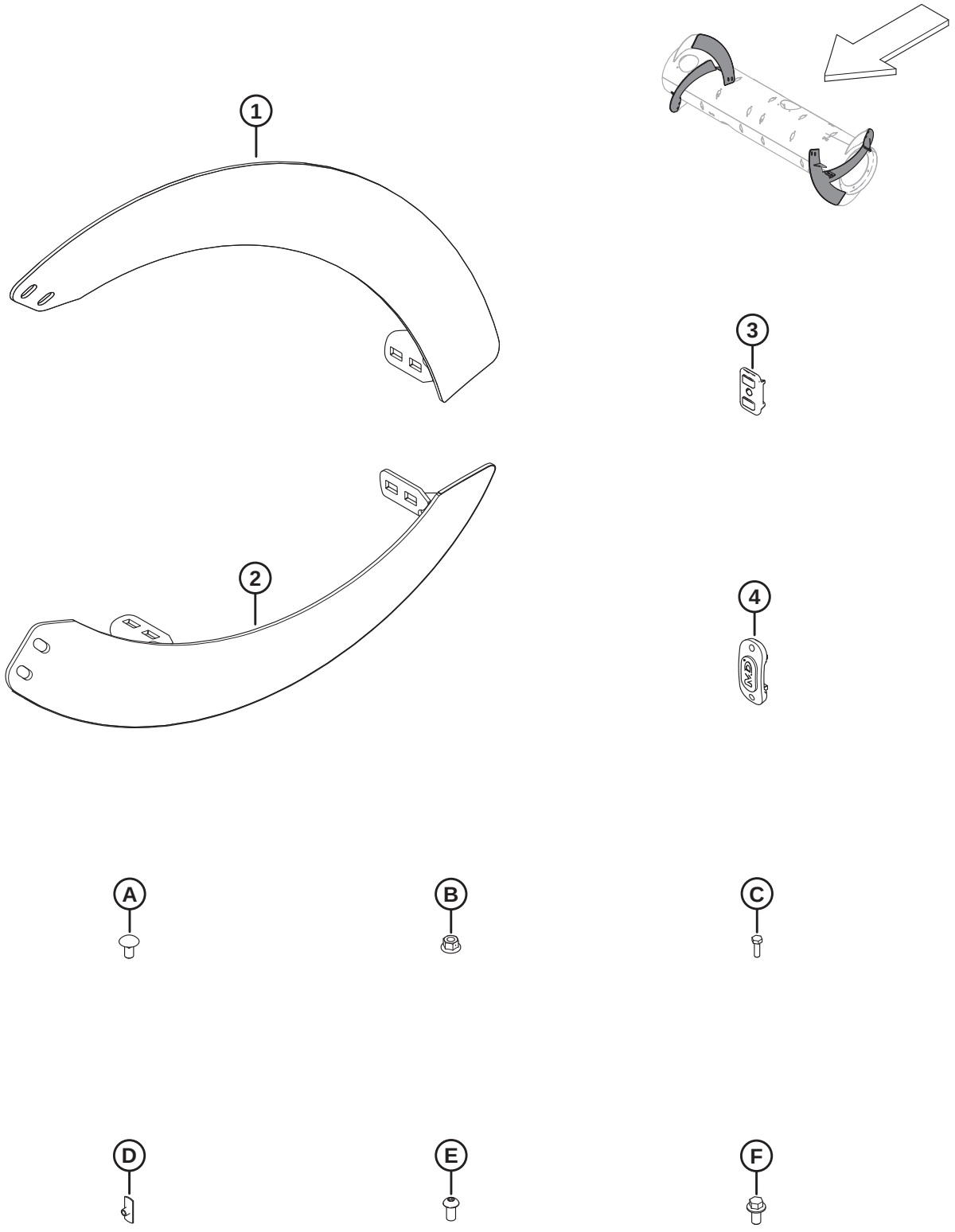

AGCO GLEANER – FEED AUGER CONVERSION PARTS

NOTE:

Feed auger parts and hardware listed here are included in AGCO Gleaner Completion Package (MD #B6675), refer to Section *116 AGCO Gleaner – Float Module Completion, page 337*.

Ref	Part Number	Description	Qty	Serial Number
1	287890	FLIGHTING, RTD – RH, LONG (HIWEAR)	4	
2	287889	FLIGHTING, RTD – LH, LONG (HIWEAR)	4	
3	213084	PLUG – FLIGHTING SLOT	8	
4	187137	PLUG	12	
A	136178	BOLT – RHSN M10 X 1.5 X 20-8.8-A3L		
B	135799	NUT – HEX FLG CTR LOC M10 X 1.5-10-A3L		
C	252703	BOLT – HEX HD TFL M6 X 1 X 20 X SPCL-12.9-AA2L		
D	197263	NUT – TEE M6 X 1		
E	135723	SCREW – HEX SOC BTN HD M10 X 1.5 X 20-10.9-A3L		
F	152655	BOLT – HEX FLG HD M10 X 1.5 X 20-8.8-A3L		

118 AGCO IDEAL™ – Float Module Completion

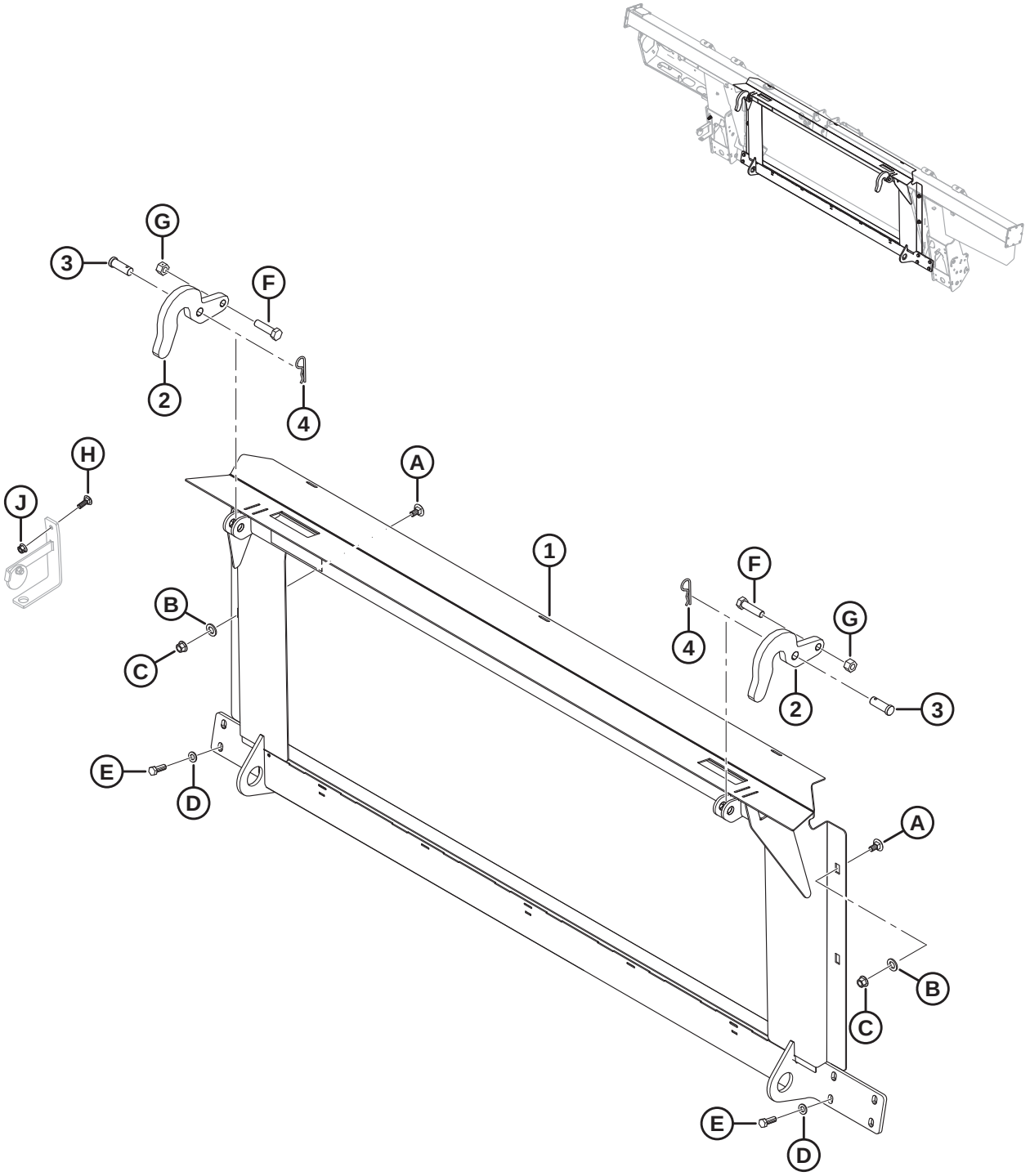

AGCO IDEAL™ – FLOAT MODULE COMPLETION

Ref	Part Number	Description	Qty	Serial Number
	B6966	**COMP PKG – AGCO, IDEAL 7/8/9 COMBINE** [424]		
1	314678	FRAME – IDEAL TRANSITION W/ DECAL	1	
2	301451	SUPPORT – HOOK	2	
3	158080	PIN – CLEVIS	2	
4	13125	PIN – HAIR	2	
A	135903	BOLT – RHSN M12 X 1.75 X 25-8.8-AA1J		
B	184717	WASHER – FLAT REG M16-200HV-AA1J		
C	136431	NUT – HEX FLG CTR LOC M12 X 1.75-10		
D	184714	WASHER – FLAT REG M12-300HV		
E	152730	BOLT – HEX HD TFL M12 X 1.75 X 35-10.9-AA1J		
F	136141	BOLT – HEX HD M16 X 2 X 60-8.8-AA1J		
G	136476	NUT – HEX CTR LOC M16 X 2-8		
H	184662	BOLT – RHSN TFL M10 X 1.5 X 30-8.8-AA1J		
J	135799	NUT – HEX FLG CTR LOC M10 X 1.5-10		

424. AGCO IDEAL™ completion package includes float module, hydraulic, and electrical completion packages required to complete a stand-alone FM100 or to convert an existing factory-installed FM100. Kits available through Whole Goods only.

119 AGCO Challenger/Massey Ferguson and Gleaner – Hydraulic Completion

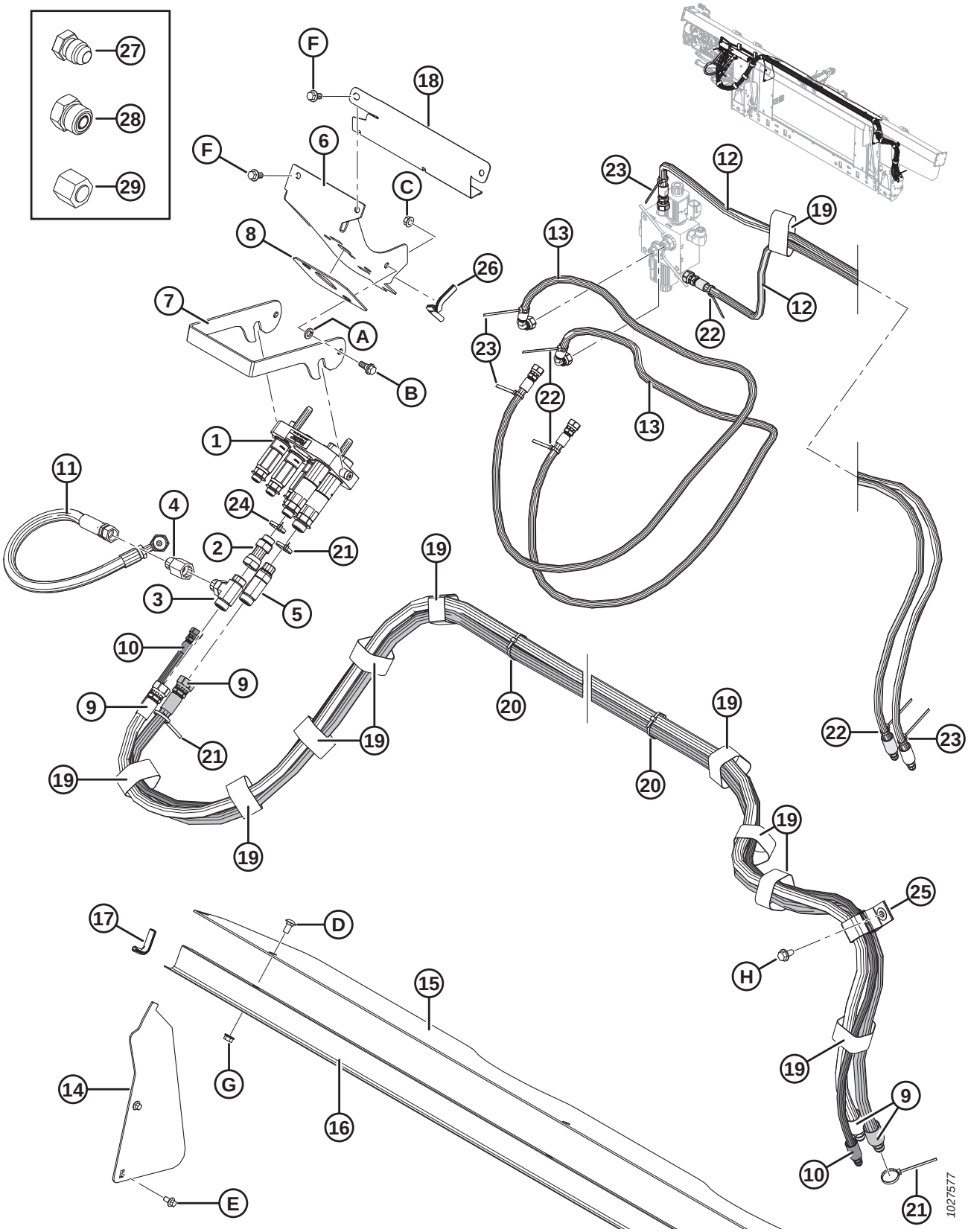

NOTE:

Some completion packages may have been shipped with a Parker multicoupler (not sold separately). Service parts for Parker multicouplers include AGCO coupler plate (MD #304405), two 1/2 inch female couplers (MD #184460), three 3/8 inch couplers (MD #191704), 1/2 inch seal kit (MD #129860), 3/8 inch seal kit (MD #129859), three adapter fittings (MD #191705), five retaining rings (MD #184603), two bushings (MD #182181), and two screws (MD #184524). Parker multicoupler service parts are **NOT** interchangeable with Faster multicoupler (MD #279737) service parts. To replace an entire Parker multicoupler, order Faster multicoupler (MD #279737).

Ref	Part Number	Description	Qty	Serial Number
1	279737	COUPLING – MULTI AGCO (FASTER)	1	
	294098	KIT – COUPLER PLATE ASSY, AGCO (FASTER) [425]		
	279011	KIT – COUPLER, 3/8 C/W 3/8 IN. FITTING (FASTER) [425]		
	279012	KIT – COUPLER, 9/16 C/W 5/8 IN. FITTING (FASTER) [425]		
	279013	KIT – COUPLER, 9/16 C/W 1/2 IN. FITTING (FASTER) [425]		
	279034	SEAL – 3/8 COUPLER (FASTER) [425]		
	279035	SEAL – 9/16 COUPLER (FASTER) [425]		
2	252650	FITTING – ADAPTER HYD	1	
	44210	O-RING – #10 ORB		
3	136181	FITTING – BRANCH TEE HYD	1	
	44210	O-RING – #10 ORB		
	135867	O-RING – #10 ORFS		
4	187031	VALVE – CHECK	1	
5	135598	FITTING – TEE HYD STR THD RUN TEE CW O-RING	1	
	44210	O-RING – #10 ORB		
	135867	O-RING – #10 ORFS		
6	213281	BRACKET – AGCO COUPLER	1	
7	248960	LATCH – COUPLER BRACKET	1	
8	187018	PAD – RUBBER	1	
9	287879	HOSE – HYD, REEL DRIVE (AGCO)	2	
10	287863	HOSE – HYD, REEL POS (AGCO)	1	
11	287878	HOSE – HYD, REEL BYPASS	1	
12	287861	HOSE – HYD, REEL FORE-AFT (AGCO)	2	
13	287862	HOSE – HYD, REEL FORE-AFT (AGCO)	2	
14	276284	COVER – FEED AUGER, SIDE	2	
15	276285	COVER – FEED AUGER, TOP	1	
16	156725	COVER – HOSE	1	
17	42589	MOULDING	2	
18	213965	COVER – HOSE	1	
19	135444	FASTENER – CINCH STRAP 6 IN. LG	11	
20	21763	FASTENER – CABLE TIE (BLACK)	4	
21	40701	FASTENER – CABLE TIE (YELLOW)	3	
22	40702	FASTENER – CABLE TIE (RED)	4	
23	49227	FASTENER – CABLE TIE (GREEN)	4	

425. Service part for Faster multicoupler (MD #279737) only. **NOT** interchangeable with Parker multicoupler (not sold separately) service parts.

AGCO CHALLENGER/MASSEY FERGUSON AND GLEANER – HYDRAULIC COMPLETION

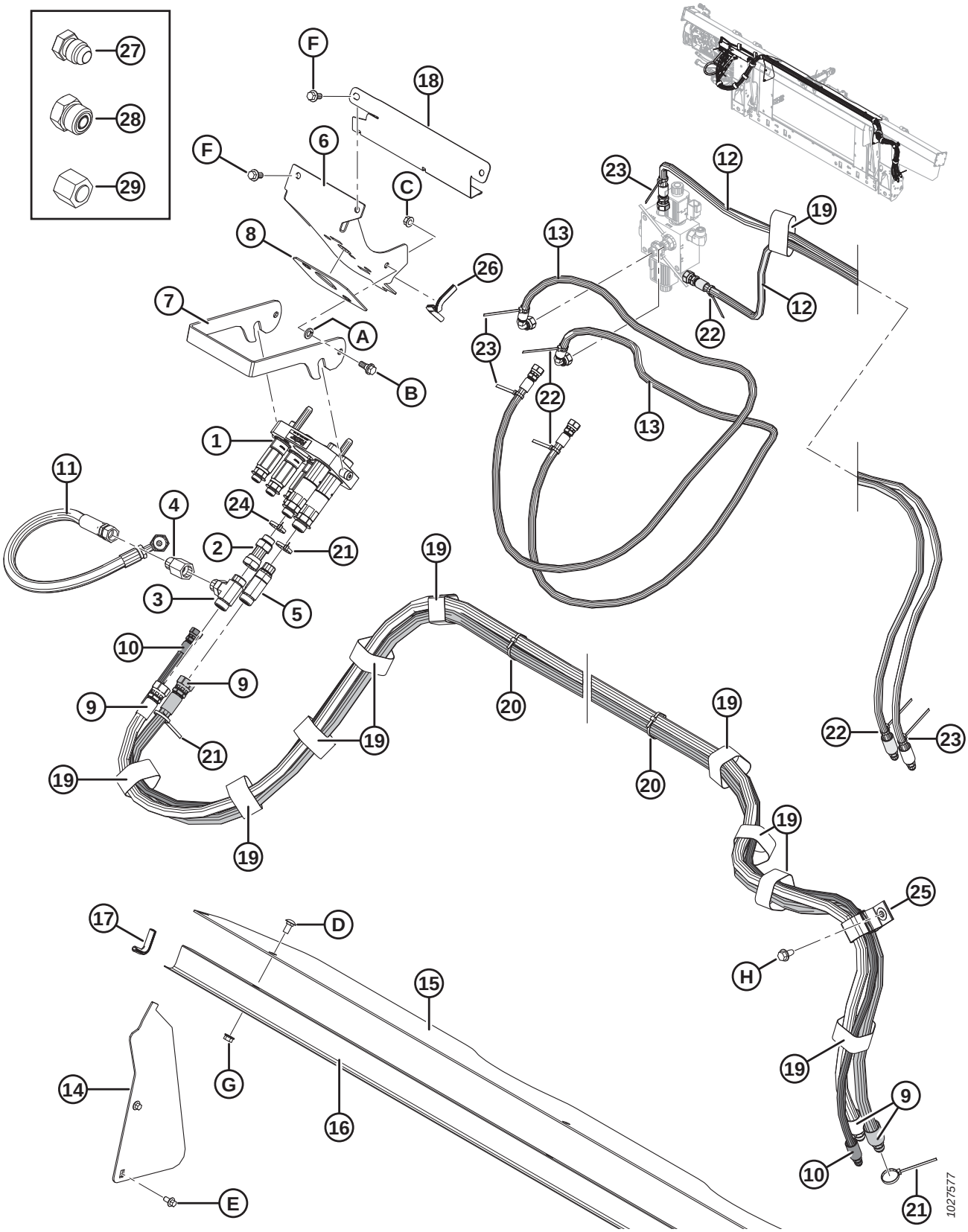

Ref	Part Number	Description	Qty	Serial Number
24	49232	FASTENER – CABLE TIE (WHITE)	1	
25	163598	STRAP – VELCRO, HANGING	1	
26	42074	MOULDING	1	
27	50178	PLUG – 3/8 IN. TUBE (FOR SHIPPING ONLY)	4	
28	136326	PLUG – HYD SAE-6 ORFS (FOR SHIPPING ONLY)	7	
	136266	PLUG – HYD SAE-10 ORFS (FOR SHIPPING ONLY)	2	
29	136325	CAP – HYD SAE-6 ORFS (FOR SHIPPING ONLY)	3	
	135860	CAP – HYD SAE-10 ORFS (FOR SHIPPING ONLY)	2	
A	18652	WASHER – REG. LOCK 7/16 IN. NOM. I.D. ZP		
B	27647	BOLT – SHOULDER		
C	30228	NUT – FLANGE DT SMTH FACE 0.375-16 UNC		
D	184657	BOLT – RHSSN M10 X 1.5 X 20-8.8-A3L		
E	136485	BOLT – HEX FLG HD TFL M8 X 1.25 X 16-8.8-A3L		
F	152655	BOLT – HEX FLG HD M10 X 1.5 X 20-8.8-A3L		
G	135799	NUT – HEX FLG CTR LOC M10 X 1.5-10-A3L		
H	136209	SCREW – HEX WASHER HD M10 X 1.5 X 20-450HV-A3L		

120 AGCO IDEAL™ – Hydraulic Completion

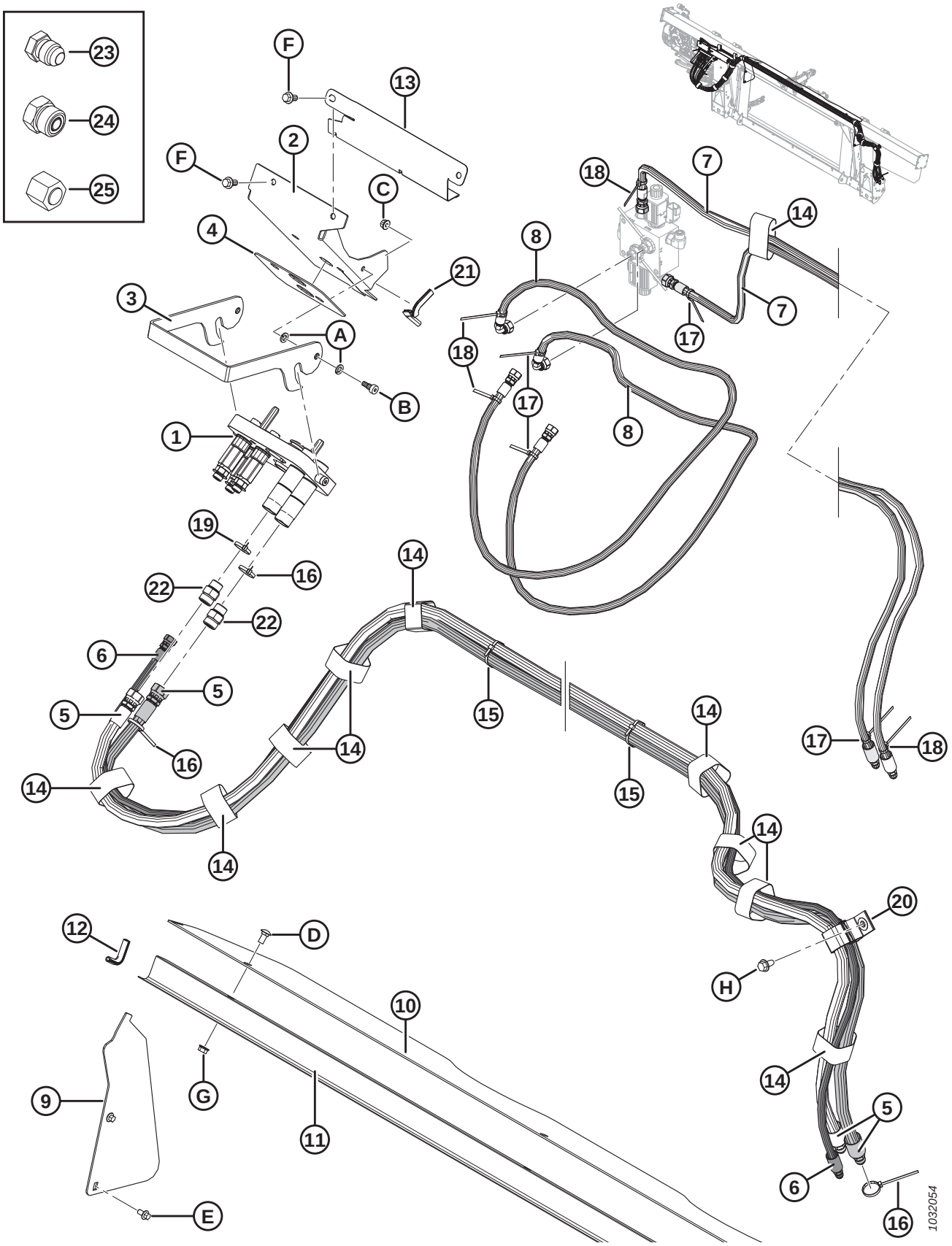

AGCO IDEAL™ – HYDRAULIC COMPLETION

Ref	Part Number	Description	Qty	Serial Number
1	**335008**	**COUPLING – MULTI, AGCO, 5-POS**	1	
	294394	KIT – COUPLER PLATE ASSY, AGCO		
	279011	KIT – COUPLER, 3/8 C/W 3/8 IN. FITTING		
	279012	KIT – COUPLER, 9/16 C/W 5/8 IN. FITTING		
	279013	KIT – COUPLER, 9/16 C/W 1/2 IN. FITTING		
	279034	SEAL – 3/8 COUPLER		
	279035	SEAL – 9/16 COUPLER		
2	335059	BRACKET – IDEAL COUPLER	1	
3	**337980**	**LATCH – MULTICOUPLER**	**1**	
4	302030	PAD – RUBBER	1	
5	287879	HOSE – HYD, REEL DRIVE (AGCO)	2	
6	287863	HOSE – HYD, REEL POS (AGCO)	1	
7	287861	HOSE – HYD, REEL FORE-AFT (AGCO)	2	
8	287862	HOSE – HYD, REEL FORE-AFT (AGCO)	2	
9	276284	COVER – FEED AUGER, SIDE	2	
10	276285	COVER – FEED AUGER, TOP	1	
11	156725	COVER – HOSE	1	
12	42589	MOULDING	2	
13	213965	COVER – HOSE	1	
14	135444	FASTENER – CINCH STRAP 6 IN. LG	11	
15	21763	FASTENER – CABLE TIE (BLACK)	4	
16	40701	FASTENER – CABLE TIE (YELLOW)	3	
17	40702	FASTENER – CABLE TIE (RED)	4	
18	49227	FASTENER – CABLE TIE (GREEN)	4	
19	49232	FASTENER – CABLE TIE (WHITE)	1	
20	163598	STRAP – VELCRO, HANGING	1	
21	42074	MOULDING	1	
22	184461	FITTING – ADAPTER HYD	1	
	44210	O-RING – #10 ORB		
	135867	O-RING – #10 ORFS		
23	50178	PLUG – 3/8 IN. TUBE (FOR SHIPPING ONLY)	4	
24	136326	PLUG – HYD SAE-6 ORFS (FOR SHIPPING ONLY)	7	
	136266	PLUG – HYD SAE-10 ORFS (FOR SHIPPING ONLY)	2	
25	136325	CAP – HYD SAE-6 ORFS (FOR SHIPPING ONLY)	3	
	135860	CAP – HYD SAE-10 ORFS (FOR SHIPPING ONLY)	2	
A	30632	WASHER – LOCK SPRING M10		
B	135894	SCREW – HEX SOC HD SHLDR M10		
C	135337	NUT – HEX FLG CTR LOC M8 X 1.25-8-AA1J		
D	184657	BOLT – RHSSN M10 X 1.5 X 20-8.8-A3L		
E	136485	BOLT – HEX FLG HD TFL M8 X 1.25 X 16-8.8-A3L		
F	152655	BOLT – HEX FLG HD M10 X 1.5 X 20-8.8-A3L		

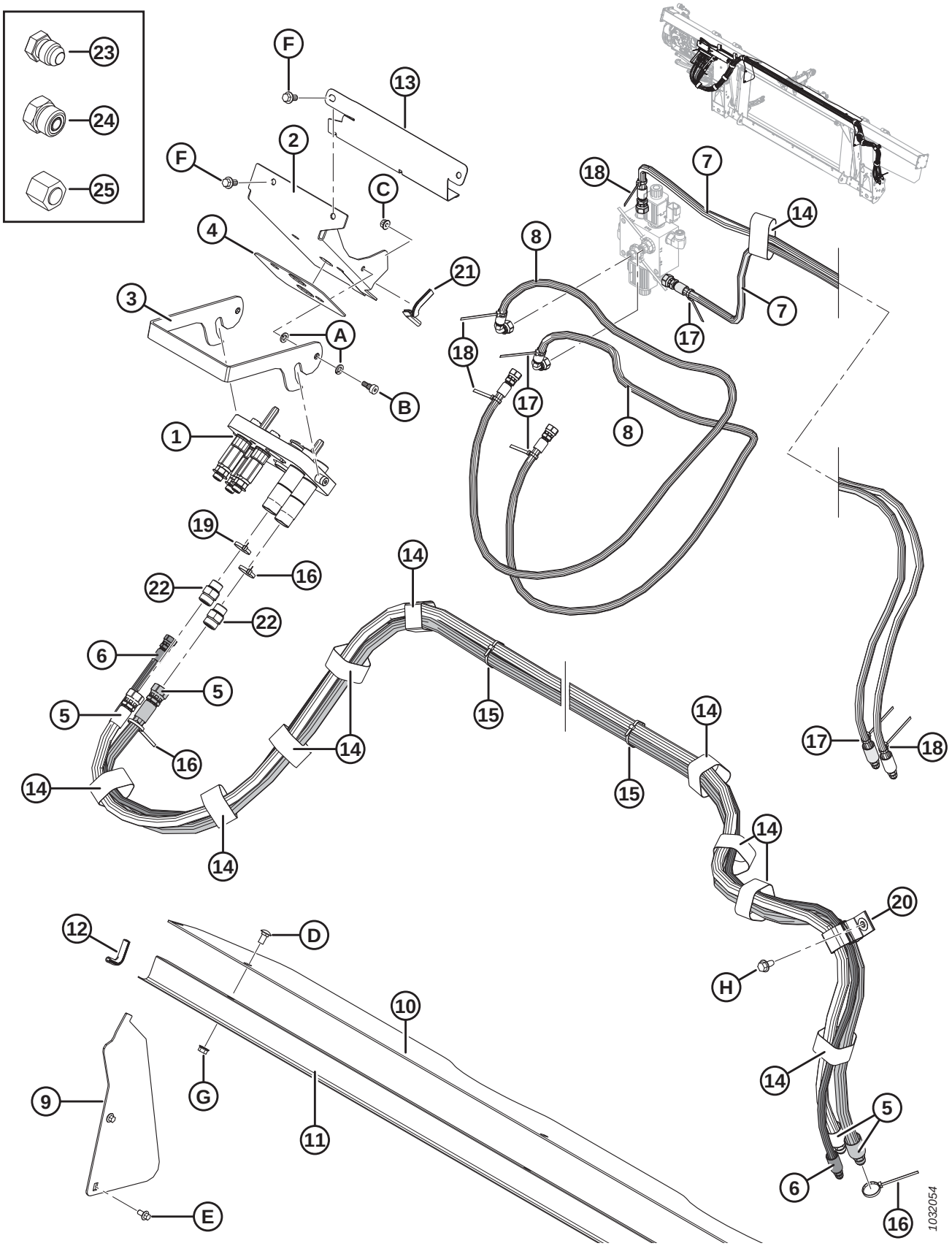
23
24
25
F
13
2
F
C
4
21
3
A
B
1
19
16
22
22
6
5
5
16
14
14
14
14
15
14
15
14
14
20
H
14
5
6
16
17
18
7
14
8
7
17
18
17
8
12
D
10
9
G
11
E
1032054

Ref	Part Number	Description	Qty	Serial Number
G	135799	NUT – HEX FLG CTR LOC M10 X 1.5-10-A3L		
H	136209	SCREW – HEX WASHER HD M10 X 1.5 X 20-450HV-A3L		

121 AGCO – Electrical Completion

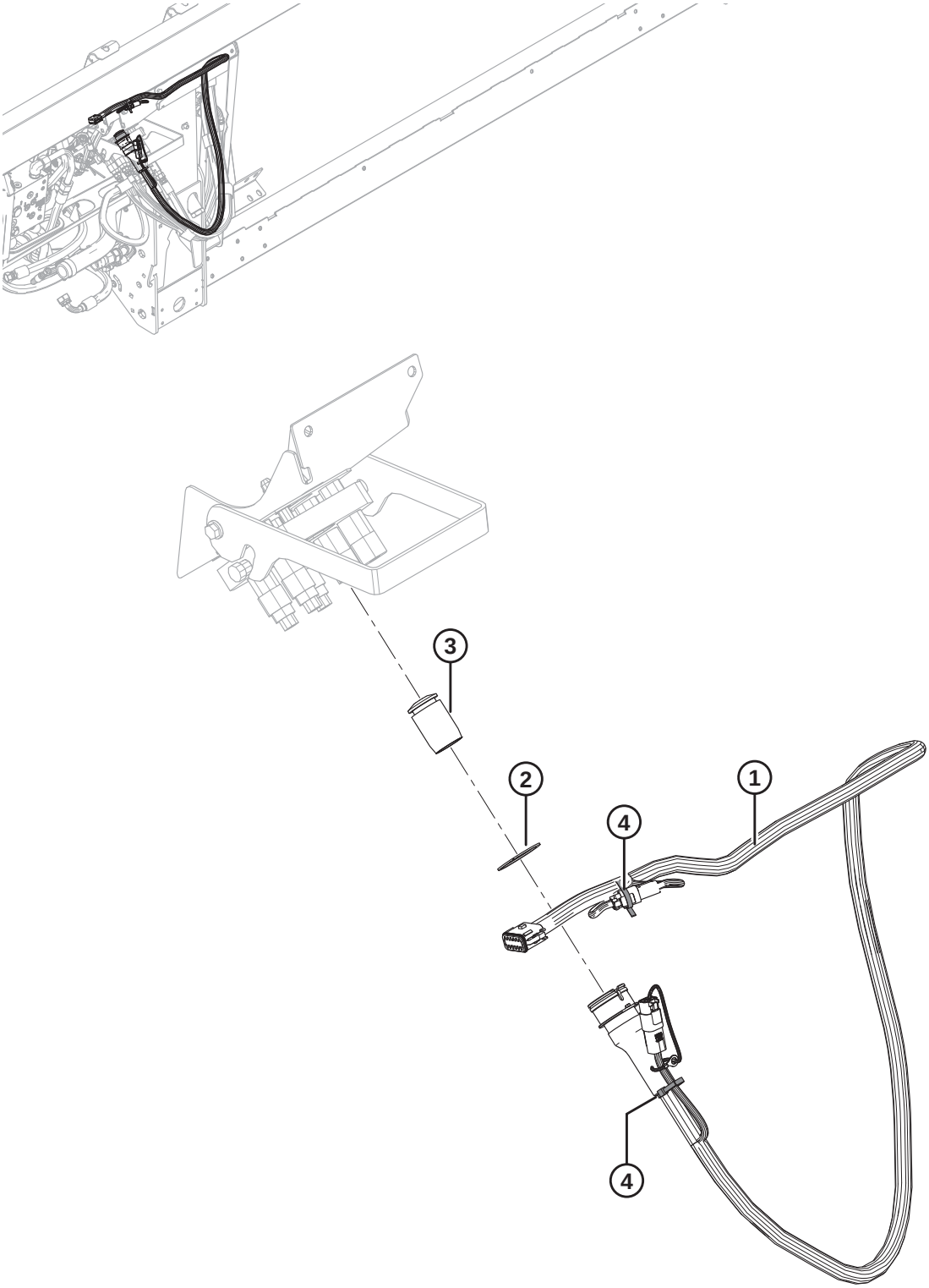

1020682

AGCO – ELECTRICAL COMPLETION

NOTE:

For specific electrical harness parts, refer to Electrical Connector Parts Catalog (MD #169641).

Ref	Part Number	Description	Qty	Serial Number
1	304576	HARNESS – FM100, COMPLETION, AGCO [426]	1	
	311707	HARNESS – FM100, COMPLETION, IDEAL [427]	1	
	134746	CONNECTOR – CAP, PLUG, 12-WAY	1	
2	135267	RING – INVERTED EXT RETAINING	1	
3	129148	PLUG – RUBBER	1	
4	21763	FASTENER – CABLE TIE (BLACK)	2	

426. Challenger/Massey Ferguson and Gleaner only.
427. IDEAL™ Series only.

122 Case IH and New Holland CR/CX – Float Module Completion

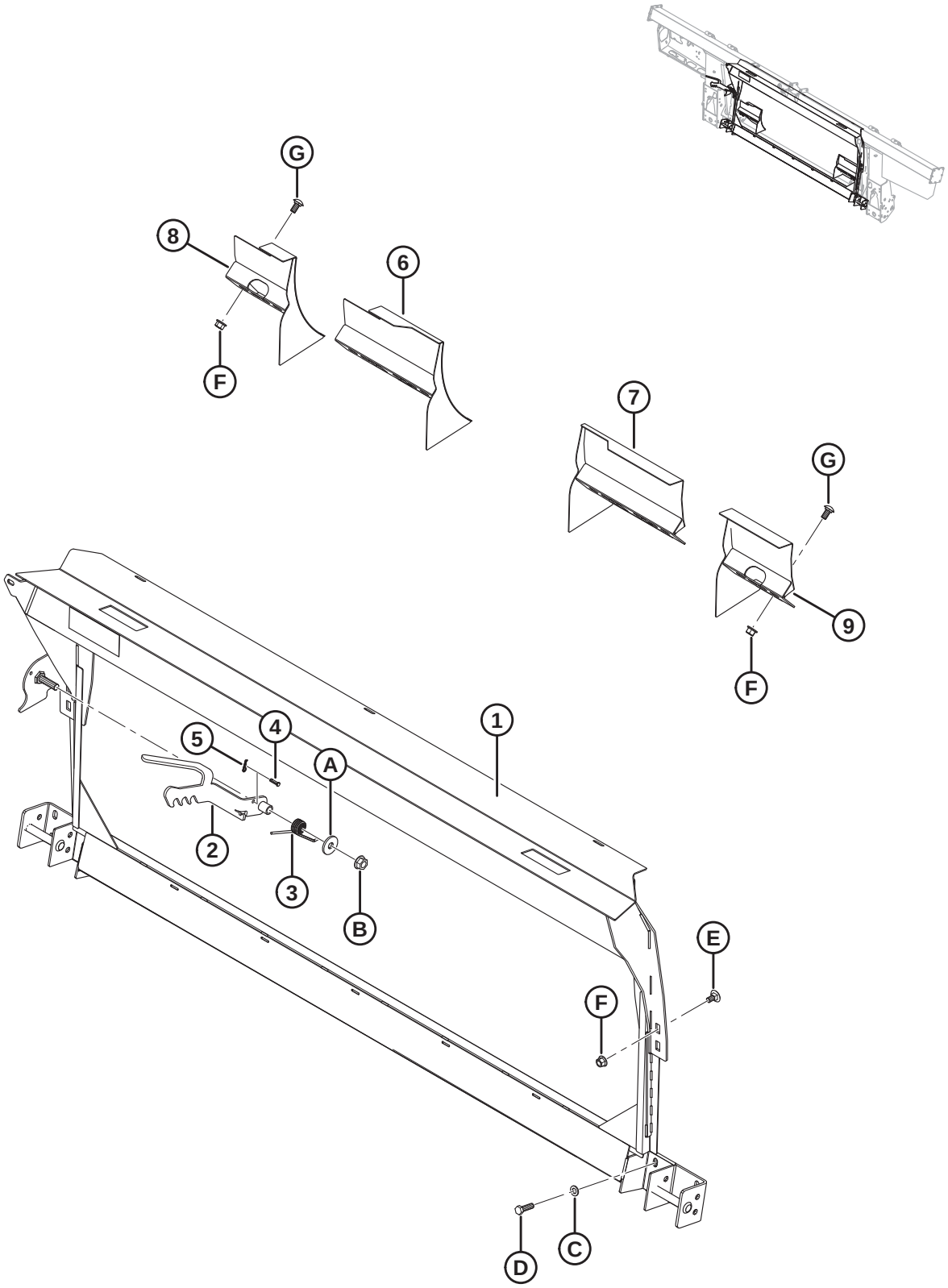

CASE IH AND NEW HOLLAND CR/CX – FLOAT MODULE COMPLETION

Ref	Part Number	Description	Qty	Serial Number
	B6959	**COMP PKG – CASE IH, NEW HOLLAND CR/CX** [428]		
1	279493	FRAME – TRANSITION, CNH	1	
2	187006	WELDT – LATCH	1	
3	156948	SPRING – TORSION	1	
4	135655	PIN – CLEVIS	1	
5	252993	PIN – HAIR (1.6 MM, 33.3 MM)	1	
6	213592	DEFLECTOR WELDT – NH CR NARROW ONLY (LH)	1	
7	213593	DEFLECTOR WELDT – NH CR NARROW ONLY (RH)	1	
8	213614	DEFLECTOR WELDT – NH CR WIDE ONLY (LH, SHORT)	1	
9	213613	DEFLECTOR WELDT – NH CR WIDE ONLY (RH, SHORT)	1	
A	23745	WASHER – FLAT		
B	50225	NUT – FLANGE DT SMTH FACE .625-11 UNC		
C	184714	WASHER – FLAT REG M12-300HV-A3L		
D	184669	BOLT – HEX HD M12 X 1.75 X 40-8.8-A3L		
E	136625	BOLT – HEX SER FLG HD M12 X 1.75 X 25 X SPCL-100-AA1J		
F	136431	NUT – HEX FLG CTR LOC M12 X 1.75-10-A3L		
G	152439	BOLT – RHSSN M12 X 1.75 X 25-8.8-A3L		

428. Case IH, New Holland CR/CX Completion Package includes float module, hydraulic, and electrical completion packages required to complete a stand-alone FM100 or to convert to an existing factory-installed FM100. Kits available through Whole Goods only.

123 Case IH 2300/2500 Series – Float Module Completion

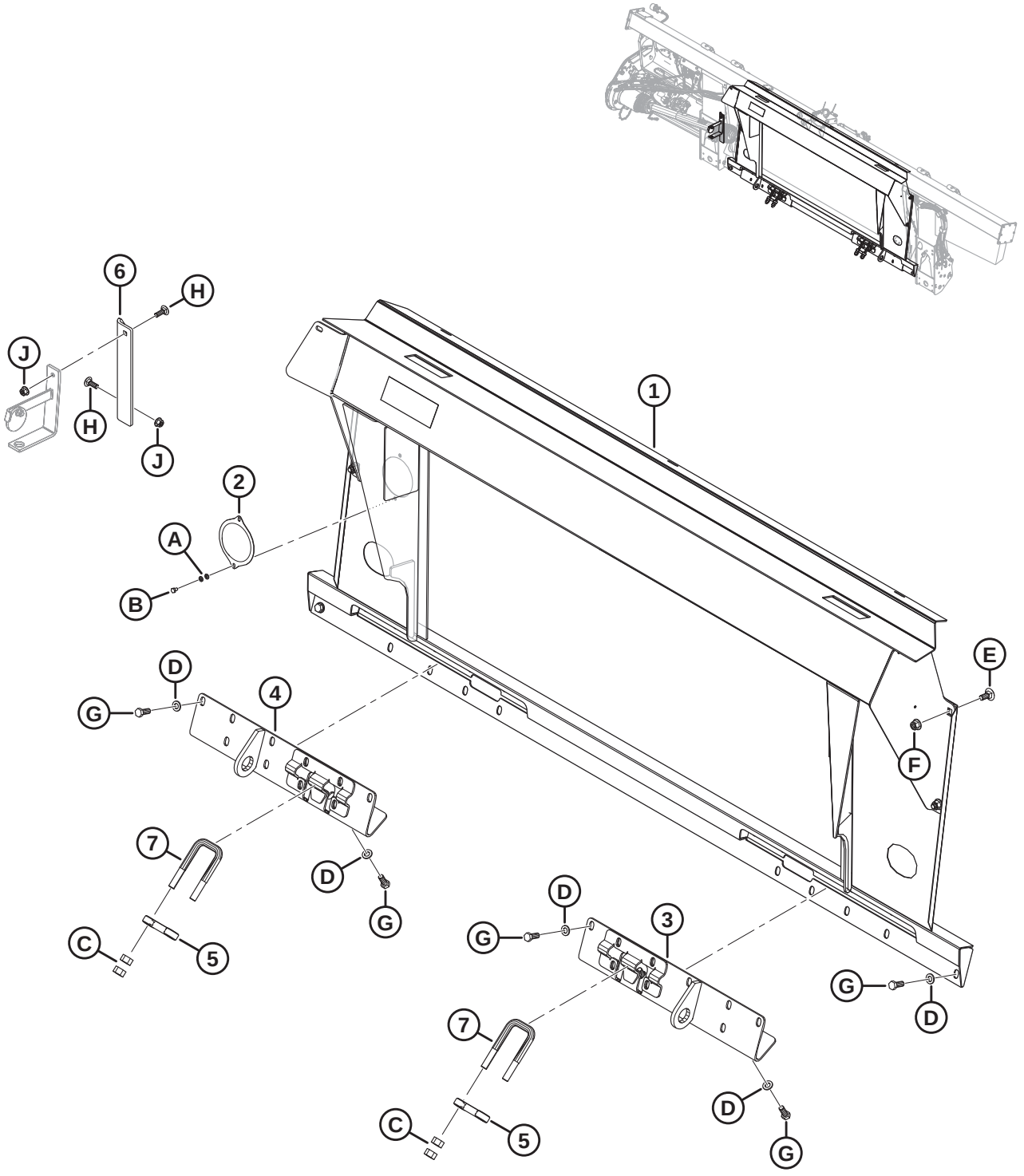

CASE IH 2300/2500 SERIES – FLOAT MODULE COMPLETION

Ref	Part Number	Description	Qty	Serial Number
	B6849	COMP PKG – CASE IH, 2300/2500 SERIES [429]		
1	335270	FRAME – CIH COMP WELDT	1	
2	328372	COVER – RTD GEARBOX	1	
3	322862	BRACKET – ATTACH WELDT RH	1	
4	322783	BRACKET – ATTACH WELDT LH	1	
5	133241	LATCH – 2300 SERIES COMBINE	2	
6	328381	BRACKET – DRIVELINE HANGER	1	
7	133242	U-BOLT	2	
A	184705	WASHER – FLAT M6-200HV-AA1J		
B	136561	BOLT – HEX HD TFL M6 X 1 X 10-8.8-AA1J		
C	18592	NUT – HEX 5/8-11 UNC GR 5 ZP		
D	184714	WASHER – FLAT REG M12-300HV		
E	184667	BOLT – RHSN M12 X 1.75 X 30-8.8-AA1J		
F	136431	NUT – HEX FLG CTR LOC M12 X 1.75-10		
G	30630	BOLT – HEX HD TFL M12 X 1.75 X 30-8.8-A3L		
H	184662	BOLT – RHSN TFL M10 X 1.5 X 30-8.8-AA1J		
J	135799	NUT – HEX FLG CTR LOC M10 X 1.5-10		

429. Case IH 2300/2500 Series Completion Package includes float module, hydraulic, and electrical completion packages required to complete a stand-alone FM100 or to convert to an existing factory-installed FM100. Kits available through Whole Goods only.

124 Case IH and New Holland CR/CX – Hydraulic Completion

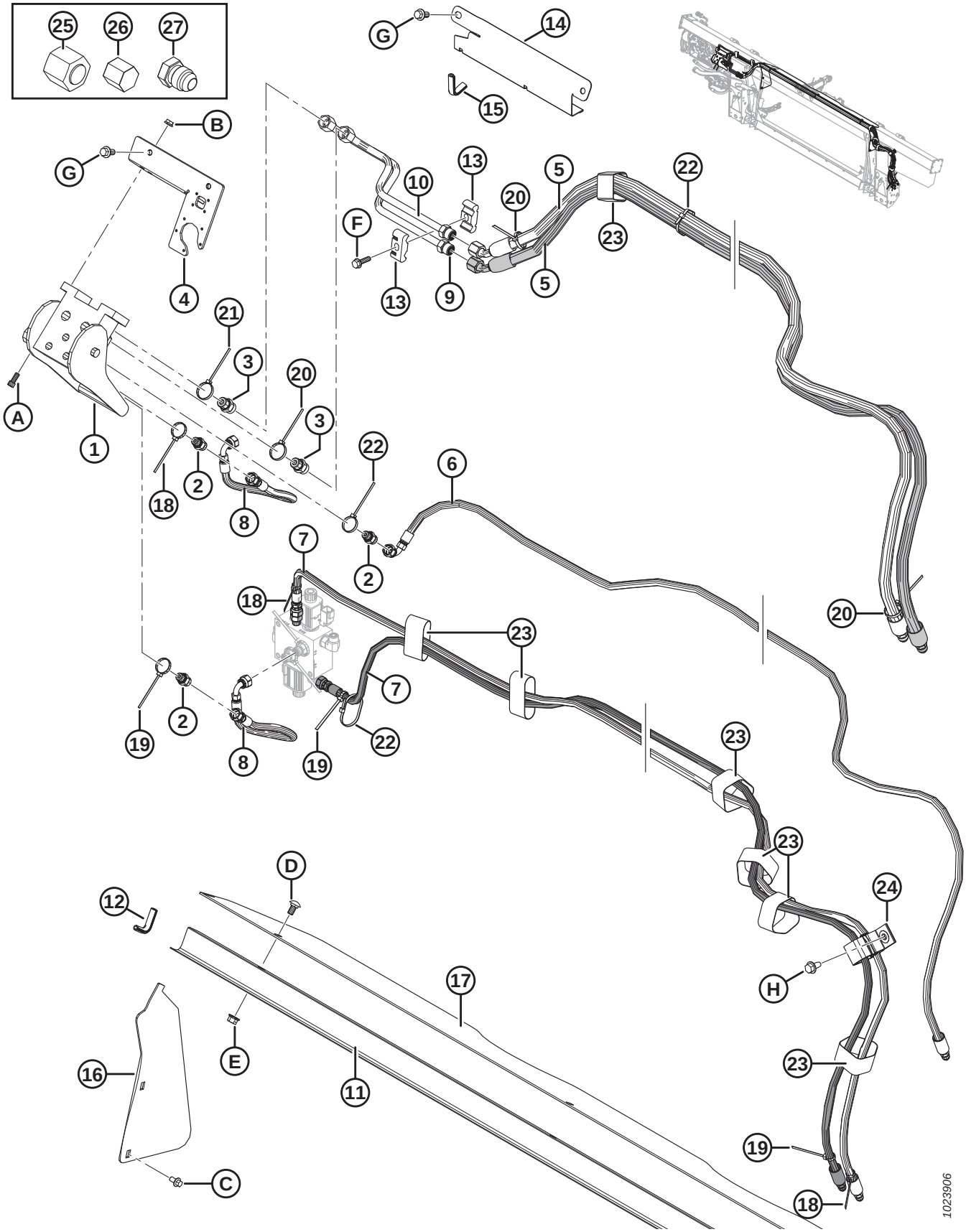

CASE IH AND NEW HOLLAND CR/CX – HYDRAULIC COMPLETION

Ref	Part Number	Description	Qty	Serial Number
1	153151	COUPLING – MULTI	1	
	129800	COVER – KIT		
	129801	LATCH – BUTTON KIT		
	129976	COUPLING – 1/4 IN.		
	129977	COUPLING – 3/8 IN.		
2	252694	FITTING – ADAPTER, .052 ORIFICE	3	
	50219	O-RING – #6 ORB		
	135865	O-RING – #6 ORFS		
3	135780	FITTING – ADAPTER	2	
	44209	O-RING – #8 ORB		
	135866	O-RING – #8 ORFS		
4	301693	KIT – CNH ELECTRICAL COVER	1	
5	213182	HOSE – HYD, REEL DRIVE	2	
6	213184	HOSE – HYD, REEL LIFT	1	
7	213350	HOSE – HYD, REEL FORE-AFT (CNH)	2	
8	213354	HOSE – HYD, FORE-AFT (CNH)	2	
9	213204	LINE – REEL DRIVE PRESS (CNH)	1	
10	213205	LINE – REEL DRIVE RETURN (CNH)	1	
11	156725	COVER – HOSE	1	
12	42589	MOULDING	2	
13	37167	CLAMP	2	
14	213965	COVER – HOSE (2016 AND PRIOR)	1	–301189
15	194082	MOULDING (2016 AND PRIOR)	1	–301189
16	276284	COVER – FEED AUGER, SIDE	2	
17	276285	COVER – FEED AUGER, TOP	1	
18	49227	FASTENER – CABLE TIE (GREEN)	3	
19	40702	FASTENER – CABLE TIE (RED)	3	
20	40701	FASTENER – CABLE TIE (YELLOW)	3	
21	49232	FASTENER – CABLE TIE (WHITE)	1	
22	21763	FASTENER – CABLE TIE (BLACK)	7	
23	135444	FASTENER – CINCH STRAP 6 IN. LG	7	
24	163598	STRAP – VELCRO, HANGING	1	
25	136325	CAP – HYD SAE-6 ORFS	1	
26	108233	CAP – 1/2 IN. TUBE (FOR SHIPPING ONLY)	2	
	30813	CAP – 3/8 IN. TUBE 37 DEG FLARE (FOR SHIPPING ONLY)	3	
27	50178	PLUG – 3/8 IN. TUBE (FOR SHIPPING ONLY)	4	
A	135397	BOLT – SOCKET HD (HEX) 5/16 NC X 3/4		
B	30280	NUT – FLG SIDE LK SMTH FACE 5/16 NC GR 5 ZP		
C	136485	BOLT – HEX FLG HD TFL M8 X 1.25 X 16-8.8-A3L		
D	184657	BOLT – RHSSN M10 X 1.5 X 20-8.8-A3L		
E	135799	NUT – HEX FLG CTR LOC M10 X 1.5-10-A3L		
F	252655	BOLT – HEX HD TFL M8 X 1.25 X 30-8.8-A3L		

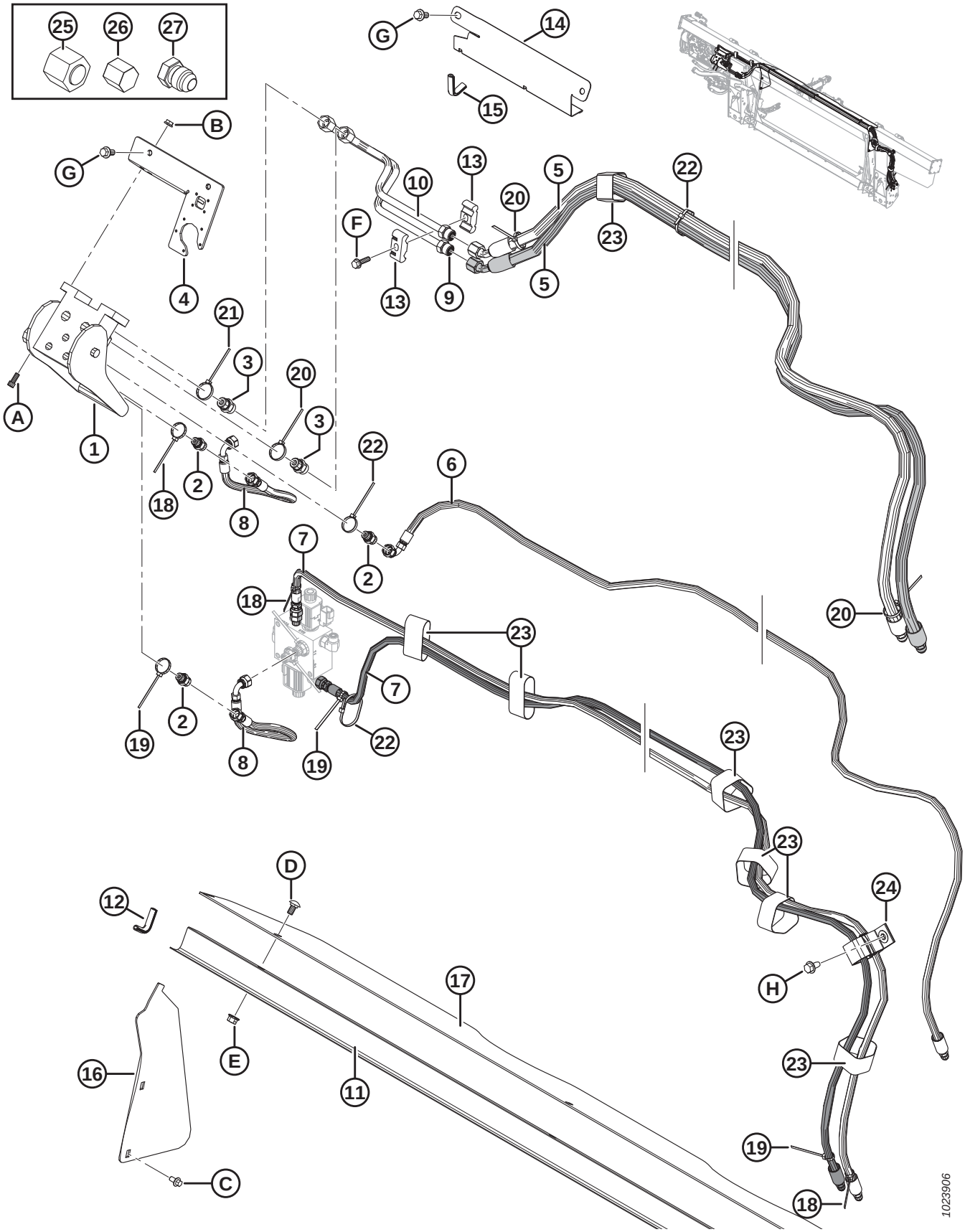
25
26
27
G
14
15
B
G
4
10
13
20
5
22
F
13
9
5
23
21
3
20
3
A
1
18
2
8
22
6
7
2
18
20
23
7
19
2
8
19
22
23
23
D
12
24
17
H
E
16
11
23
19
C
18
1023906

Ref	Part Number	Description	Qty	Serial Number
G	152655	BOLT – HEX FLG HD M10 X 1.5 X 20-8.8-A3L		
H	136209	SCREW – HEX WASHER HD M10 X 1.5 X 20-450HV-A3L		

125 Case IH 2300/2500 Series – Hydraulic Completion

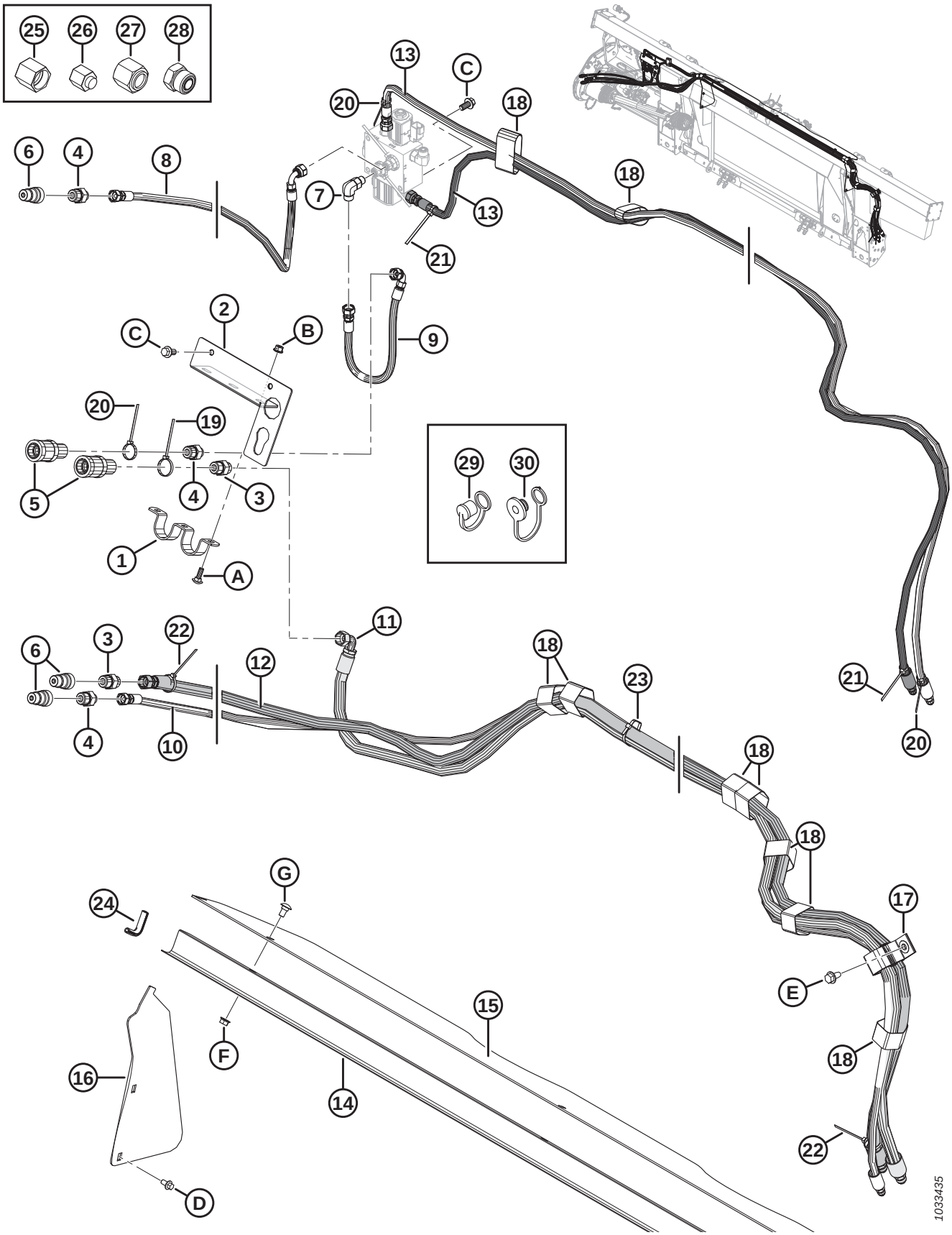

Ref	Part Number	Description	Qty	Serial Number
1	322695	HOLDER	1	
2	322692	SUPPORT – CONNECTOR	1	
3	184463	FITTING – ADAPTER HYD	2	
	44210	O-RING – #10 ORB		
	135866	O-RING – #8 ORFS		
4	184462	FITTING – ADAPTER HYD	3	
	44210	O-RING – #10 ORB		
	135865	O-RING – #6 ORFS		
5	114143	FITTING – COUPLING HYD	2	
6	114142	FITTING – COUPLING HYD	3	
7	136095	FITTING – ELBOW 90° HYD	1	
	50219	O-RING – #6 ORB		
	135865	O-RING – #6 ORFS		
8	322752	HOSE – HYD, FORE-AFT	1	
9	322751	HOSE – HYD, FORE-AFT	1	
10	322744	HOSE – HYD, REEL LIFT	1	
11	322742	HOSE – HYD, REEL DRIVE	1	
12	322739	HOSE – HYD, REEL DRIVE	1	
13	213350	HOSE – HYDRAULIC	2	
14	156725	COVER – HOSE	1	
15	276285	COVER – FEED AUGER, TOP	1	
16	276284	COVER – FEED AUGER, SIDE	2	
17	163598	CINCH STRAP – HANGING, 6 IN. LG	1	
18	135444	CINCH STRAP – 6 IN. LG	9	
19	49232	FASTENER – CABLE TIE, WHITE	1	
20	49227	FASTENER – CABLE TIE, GREEN	3	
21	40702	FASTENER – CABLE TIE, RED	2	
22	40701	FASTENER – CABLE TIE, YELLOW	2	
23	21763	FASTENER – CABLE TIE, BLACK	4	
24	42589	MOULDING	2	
25	108233	CAP – 1/2 IN. TUBE (FOR SHIPPING ONLY)	2	
26	30813	CAP – 3/8 IN. TUBE 37 DEG FLARE (FOR SHIPPING ONLY)	3	
27	136741	PLUG – HYD SAE -8 ORFS (FOR SHIPPING ONLY)	1	
	136325	PLUG – HYD SAE -6 ORFS, (FOR SHIPPING ONLY)	1	
28	136265	PLUG – HYD SAE -8 ORFS (FOR SHIPPING ONLY)	1	
	136326	PLUG – HYD SAE -6 ORFS (FOR SHIPPING ONLY)	2	
29	21856	CAP – DUST (FOR SHIPPING ONLY) [430]	3	
30	21858	CAP – DUST (FOR SHIPPING ONLY) [431]	2	
A	184648	BOLT – RHSN M8 X 1.25 X 25-8.8-AA1J		
B	135337	NUT – HEX FLG CTR LK M8 X 1.25-8-AA1J		

430. Intended for use with 1/2 in. male quick couplers.
431. Intended for use with 1/2 in. female quick couplers.

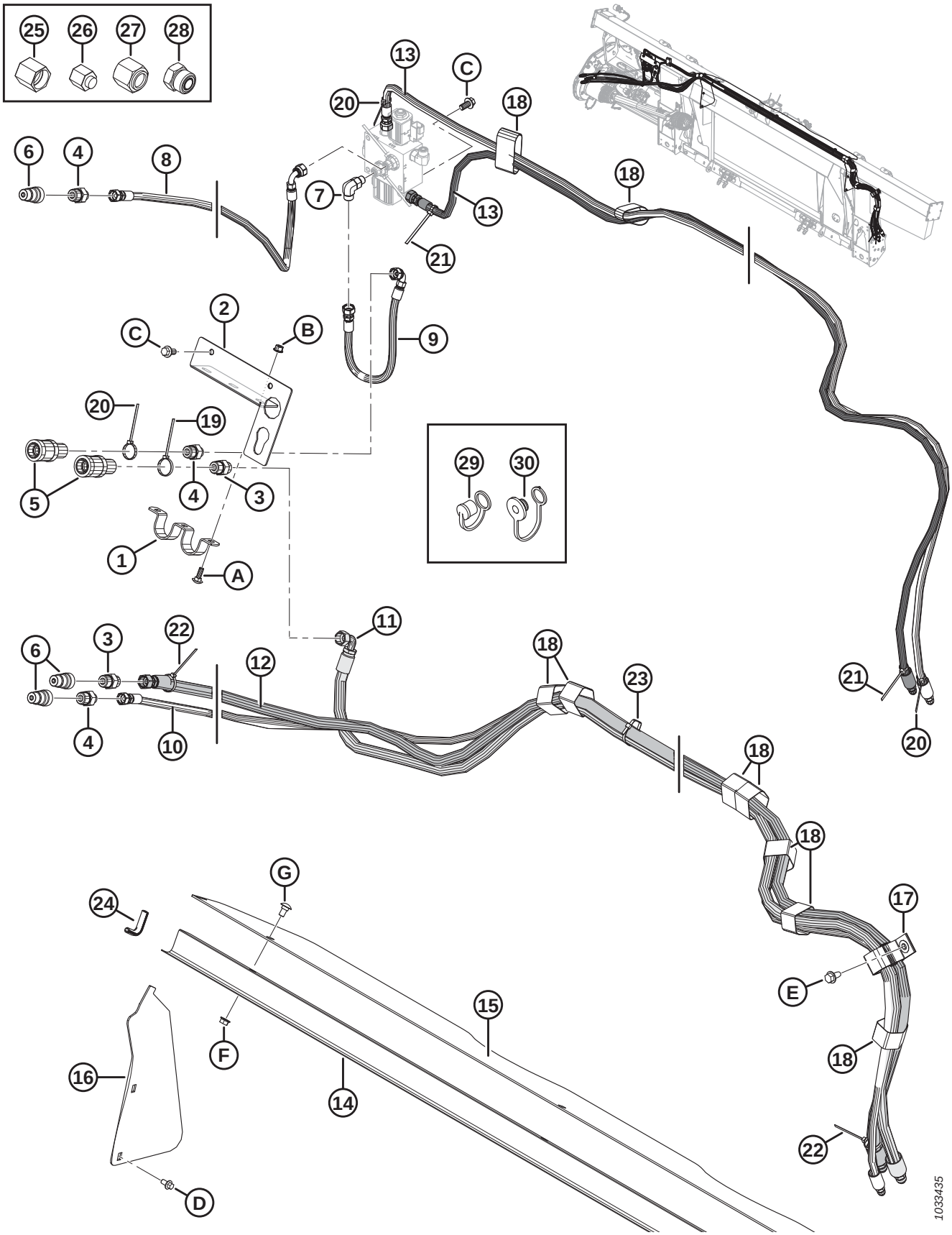
25
26
27
28
13
C
20
18
6
4
8
7
13
18
21
2
C
B
9
20
19
5
4
3
29
30
1
A
11
6
3
22
12
18
23
21
4
10
20
18
18
G
24
17
E
15
F
16
14
18
22
D
1033435

Ref	Part Number	Description	Qty	Serial Number
C	152655	BOLT – HEX FLG HD M10 X 1.5 X 20-8.8-AA1J		
D	136485	BOLT – HEX FLG HD TFL M8 X 1.25 X 16-8.8-AA1J		
E	136209	SCREW – HEX WASHER M10 X 1.5 X 20-450HV		
F	30228	NUT – FLG DT SM FACE 3/8-16 UNC-GR5-AA1J		
G	21472	BOLT – RHSN 3/8-16 X .75-GR5 AA1J		

126 Case IH and New Holland CR/CX – Electrical Completion

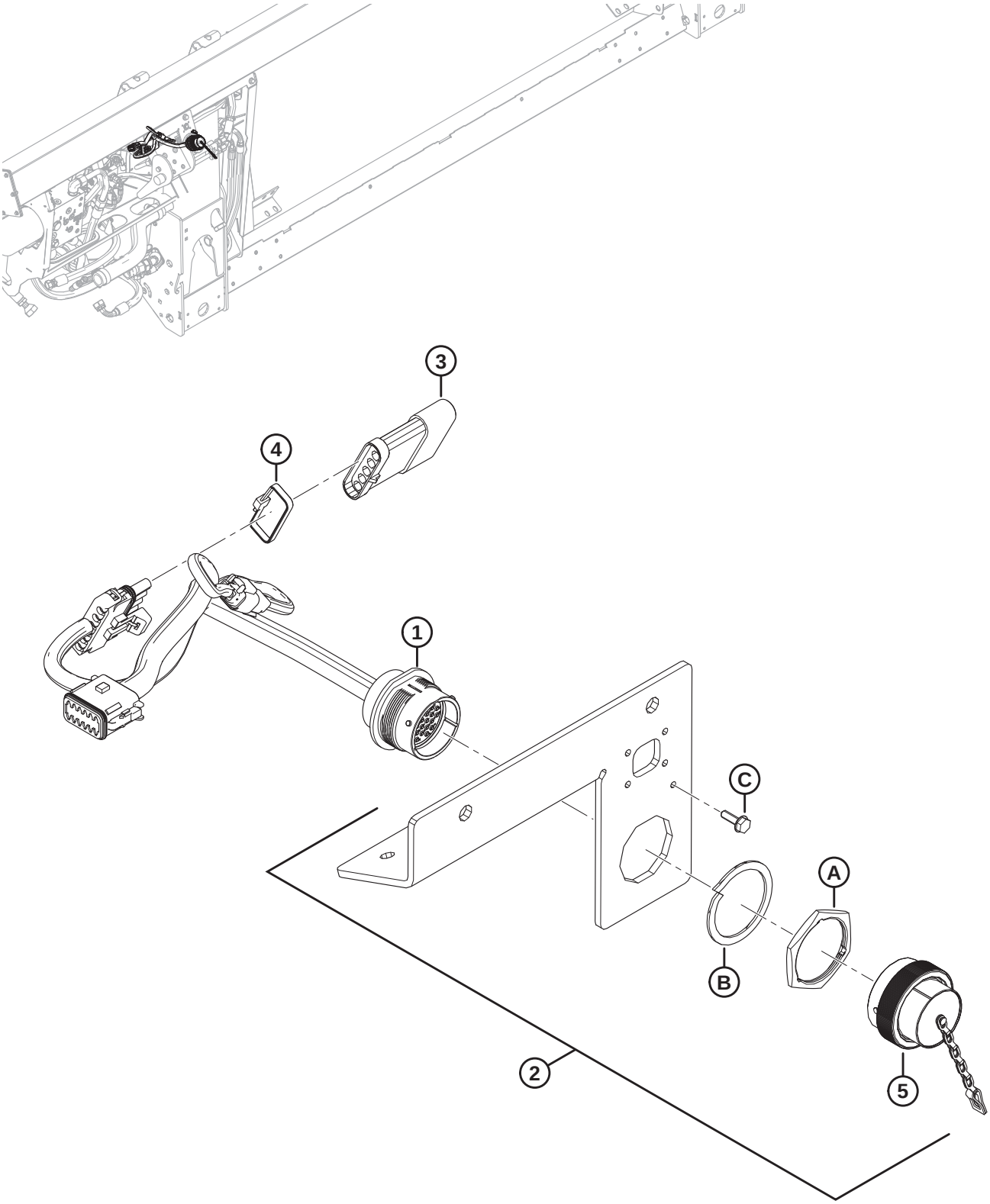

NOTE:

For specific electrical harness parts, refer to Electrical Connector Parts Catalog (MD #169641).

Ref	Part Number	Description	Qty	Serial Number
1	213211	HARNESS – FM100, COMPLETION, CNH	1	
	134746	CONNECTOR – CAP, PLUG, 12-WAY	1	
2	301693	KIT – CNH ELECTRICAL COVER	1	
3	153933	RESISTOR – HEADER RECOGNITION	1	
4	30753	FASTENER – CABLE TIE (BLACK)	1	
5	134053	CAP – PLUG, HD30, SIZE 24	1	
A	134010	NUT – PANEL, HD30, SIZE 24		
B	134011	WASHER – LOCK SPRING, DEUTSCH HD, SIZE 24		
C	21947	SCREW – SELF TAPPING HEX WASH HD #10 X 5/8 ZP		

127 Case IH 2300/2500 Series – Electrical Completion

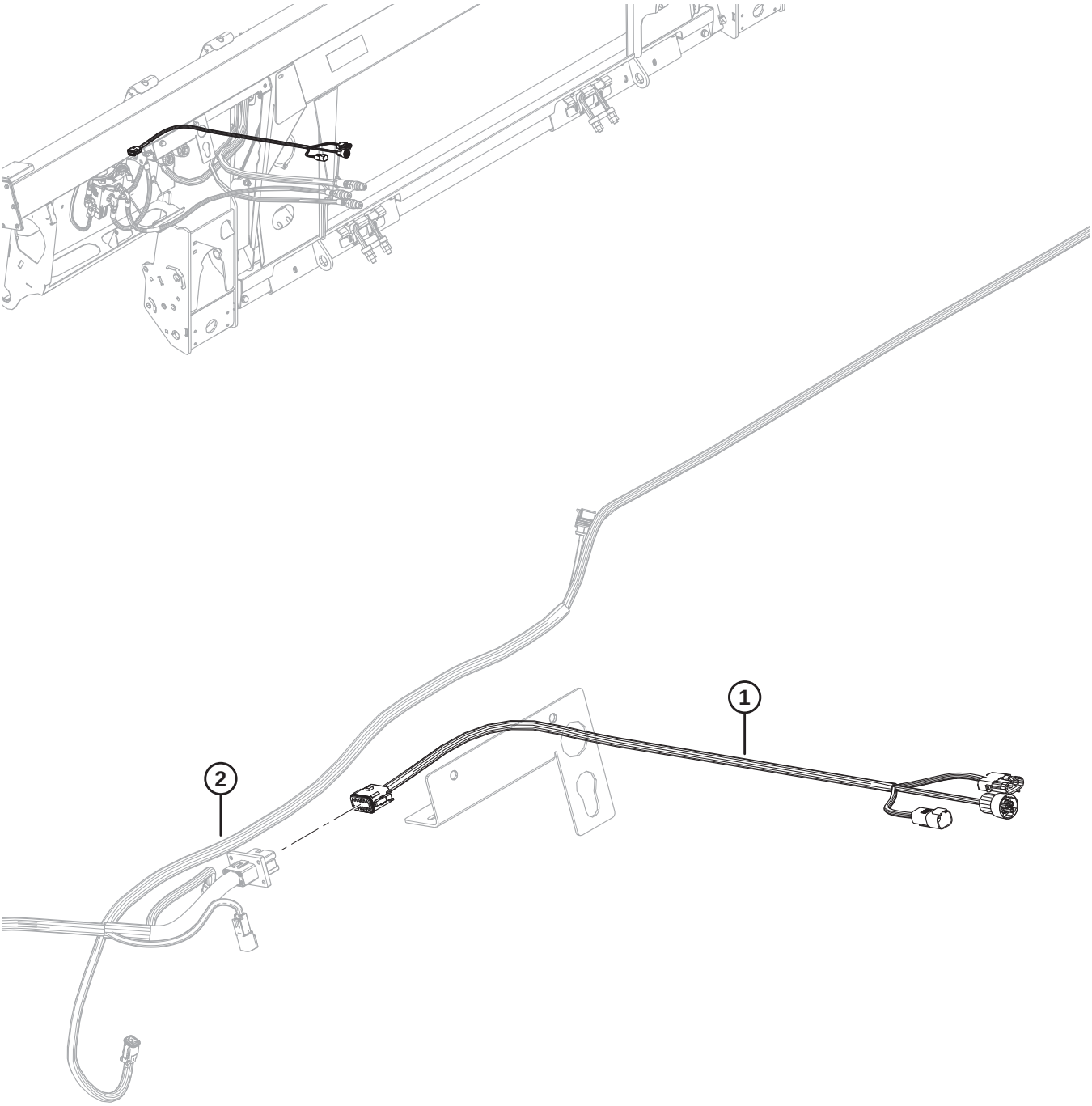

1032087

NOTE:

For specific electrical harness parts, refer to Electrical Connector Parts Catalog (MD #169641).

Ref	Part Number	Description	Qty	Serial Number
1	322748	HARNESS – FM100, COMPLETION, CIH	1	
	134746	CONNECTOR – CAP, PLUG, 12-WAY	1	
2	REF	HARNESS – FM100, MAIN	1	

128 New Holland 10 Volt Auto Header Height Control Converter Kit

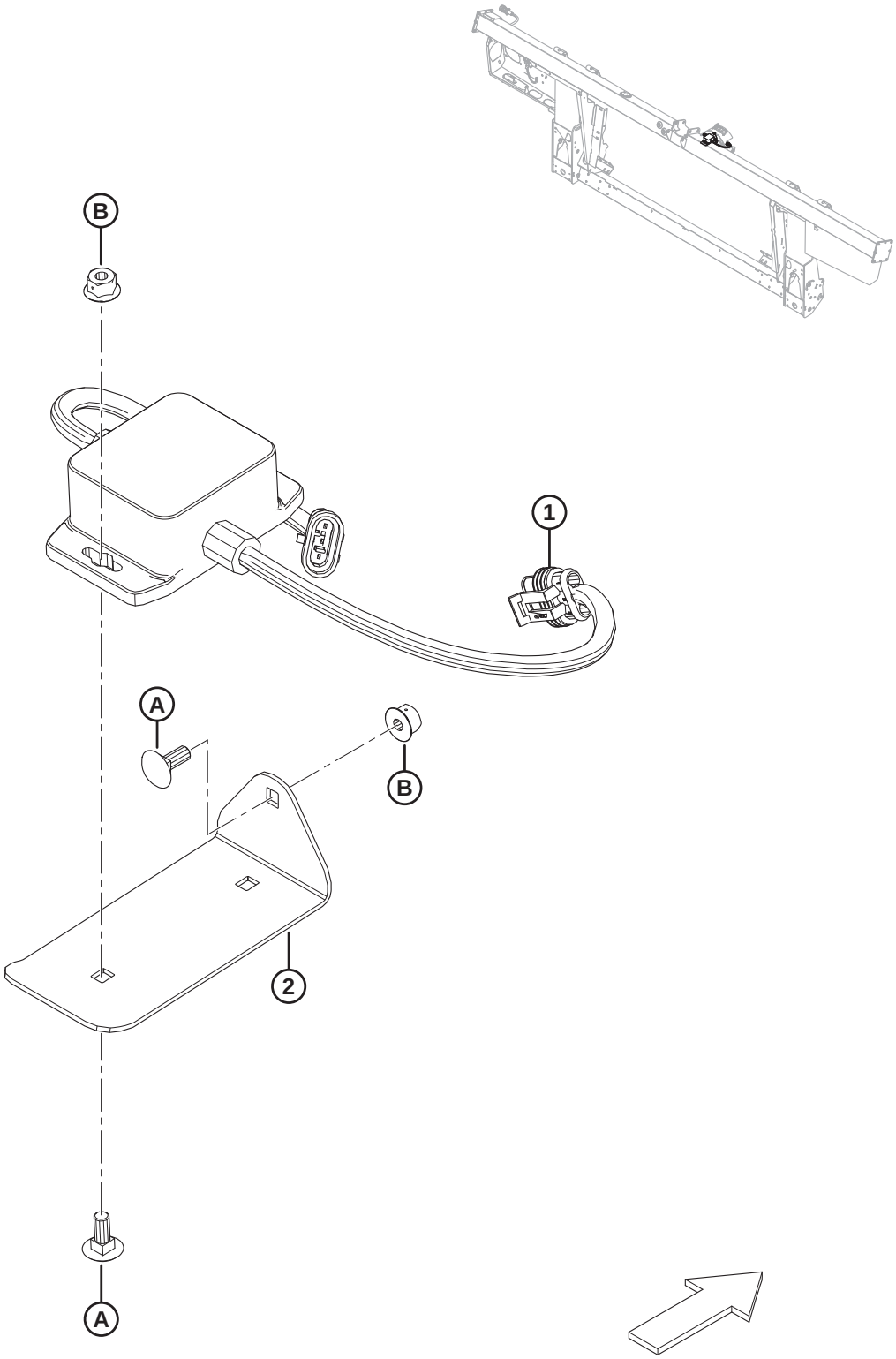

1021112

NEW HOLLAND 10 VOLT AUTO HEADER HEIGHT CONTROL CONVERTER KIT

Ref	Part Number	Description	Qty	Serial Number
	B6421	KIT – 10V CONVERTER [432]		
	295013	KIT – 10V CONVERTER [433]		
1	276759	ADAPTER – 10V	1	
2	295401	PLATE – MOUNT	1	
A	136748	BOLT – RHSN M6 X 1 X 16-8.8-A2L		
B	152668	NUT – HEX FLG CTR LOC M6 X 1-8-A2L		

432. Includes 10 Volt Converter kit (MD #295013). Kits available through Whole Goods only.
433. Includes all listed parts, hardware, and instructions.

129 New Holland CR Fillers Conversion Kit

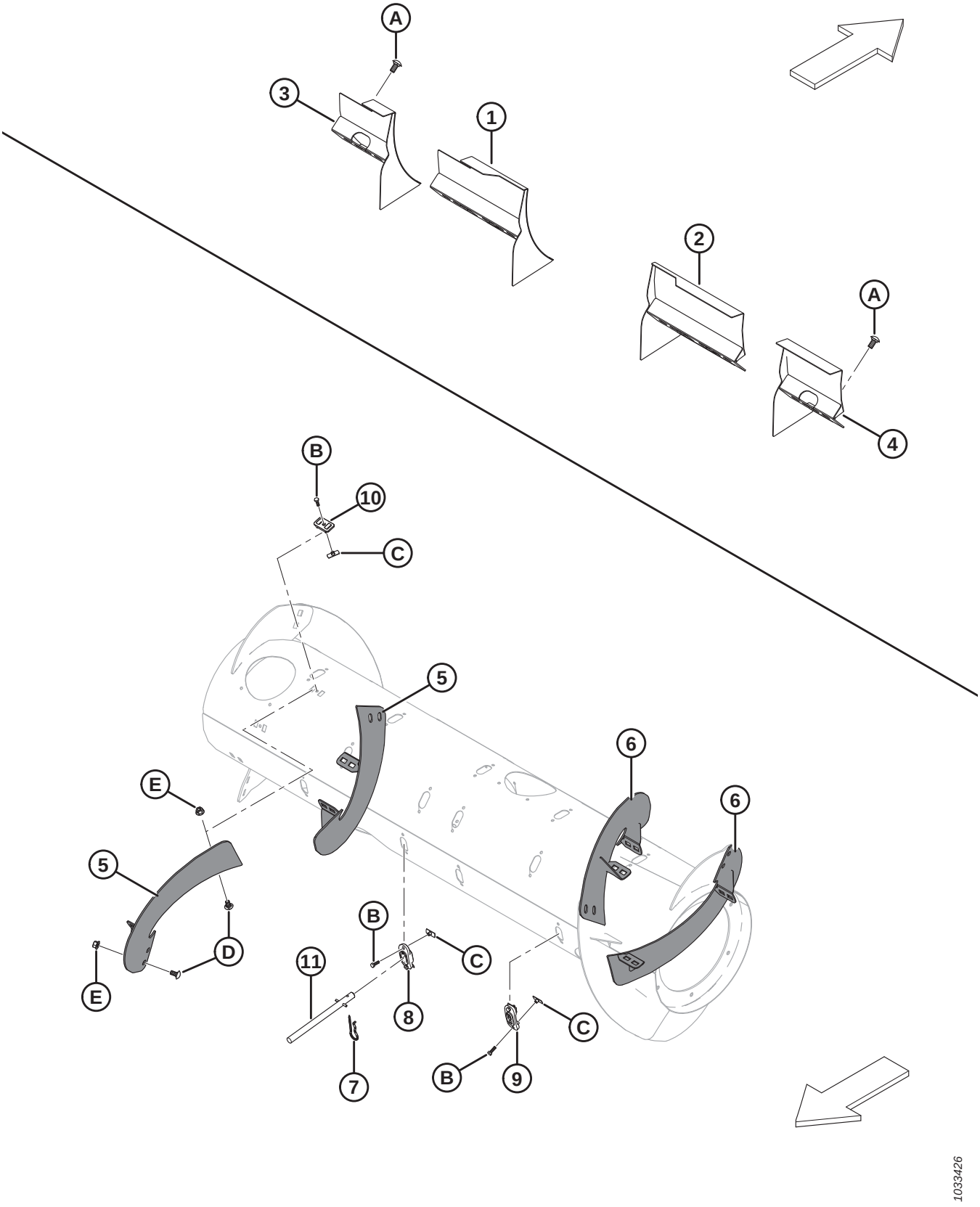

NEW HOLLAND CR FILLERS CONVERSION KIT

Ref	Part Number	Description	Qty	Serial Number
	B6886	KIT – NEW HOLLAND CR FILLERS [434]		
1	213592	DEFLECTOR WELDT – NH CR NARROW ONLY (LH)	1	
2	213593	DEFLECTOR WELDT – NH CR NARROW ONLY (RH)	1	
3	213614	DEFLECTOR WELDT – NH CR WIDE ONLY (LH, SHORT)	1	
4	213613	DEFLECTOR WELDT – NH CR WIDE ONLY (RH, SHORT)	1	
5	287890	FLIGHTING, RTD – RH, LONG (HIWEAR)	2	
6	287889	FLIGHTING, RTD – LH, LONG (HIWEAR)	2	
7	123180	PIN – HAIR	8	
8	337143	GUIDE	8	
9	187137	PLUG	4	
10	213084	PLUG – FLIGHTING SLOT	8	
11	337152	KIT – FINGER [435]	8	
	7642	PIN – SPRING 3/16 DIA X 1.5 LG		
A	152439	BOLT – RHSSN M12 X 1.75 X 25-8.8-A3L		
B	252703	BOLT – HEX HD TFL M6 X 1 X 20 X SPCL-12.9-AA2L		
C	197263	NUT – TEE M6 X 1		
D	184657	BOLT – RHSSN M10 X 1.5 X 20-8.8-A3L		
E	135799	NUT – HEX FLG CTR LOC M10 X 1.5-10-A3L		

434. Kits available through Whole Goods only.
435. Includes solid finger (not sold separately), spring pin (MD #7642), guide (MD #337143), and instructions.

130 CLAAS Lexion 500/700 Series – Float Module Completion

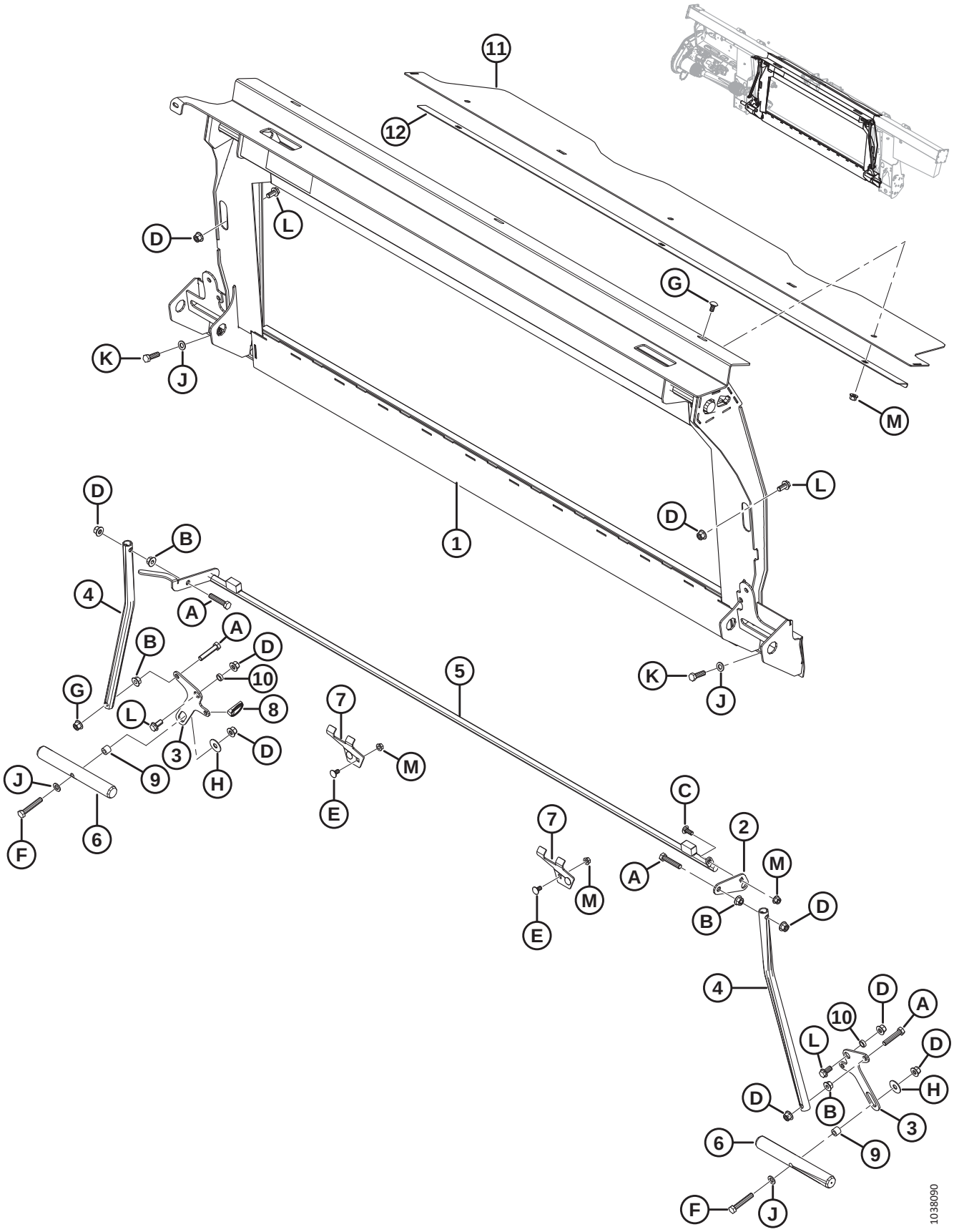

CLAAS LEXION 500/700 SERIES – FLOAT MODULE COMPLETION

Ref	Part Number	Description	Qty	Serial Number
	B6960	**COMP PKG – CLAAS** [436]		
1	**347077**	**FRAME – CLAAS TRANSITION W/DECAL**	**1**	
2	**328582**	**LEVER**	**1**	
3	**347569**	**LEVER – PIVOT**	**2**	
4	156783	TUBE – LINK	2	
5	**337311**	**LATCH – TRANSFER WELDMENT**	**1**	
6	133138	SHAFT [437]	2	
7	245246	SUPPORT – LOCK KEEPER	2	
8	**113561**	**PIN – LYNCH**	**1**	
9	**337043**	**BUSHING – M12 THREADED**	**2**	
10	133439	SPACER – 0.75 O.D. X 0.120 IN. WALL	2	
11	**328356**	**COVER – FEED AUGER TOP**	**1**	
12	**301629**	**RETAINER – DUST COVER**	**1**	
A	**237316**	**BOLT – HEX HD TFL M12 X 1.75 X 60-8.8-AA1J**		
B	**136036**	**NUT – HEX SM FLG M12 X 1.75-8-AA1J**		
C	**136506**	**BOLT – RHSSN M10 X 1.5 X 25-8.8-AA1J**		
D	**136431**	**NUT – HEX FLG CTR LOC M12 X 1.75-10-A3L**		
E	**136178**	**BOLT – RHSN M10 X 1.5 X 20-8.8-AA1J**		
F	**184675**	**BOLT – HEX HD M12 X 1.75 X 70-8.8-AA1J**		
G	**184657**	**BOLT – RHSSN M10 X 1.5 X 20-8.8-AA1J**		
H	32247	WASHER – FLAT		
J	184714	WASHER – FLAT REG M12-300HV-A3L		
K	184669	BOLT – HEX HD M12 X 1.75 X 40-8.8-A3L		
L	136625	BOLT – HEX SER FLG HD M12 X 1.75 X 25 X SPCL-100-AA1J		
M	**135799**	**NUT – HEX FLG CTR LOC M10 X 1.5-10**		

436. CLAAS Lexion 500/700 Series Completion Package includes float module, hydraulic, and electrical completion packages required to complete a stand-alone FM100 or to convert to an existing factory-installed FM100. Kits available through Whole Goods only.
437. Shaft (MD #304782) with additional machining is available for service of CLAAS machines with fit-up issues in the field. For more information, see Service Bulletin SB #1917.

131 CLAAS Lexion 500/700 Series – Hydraulic Completion

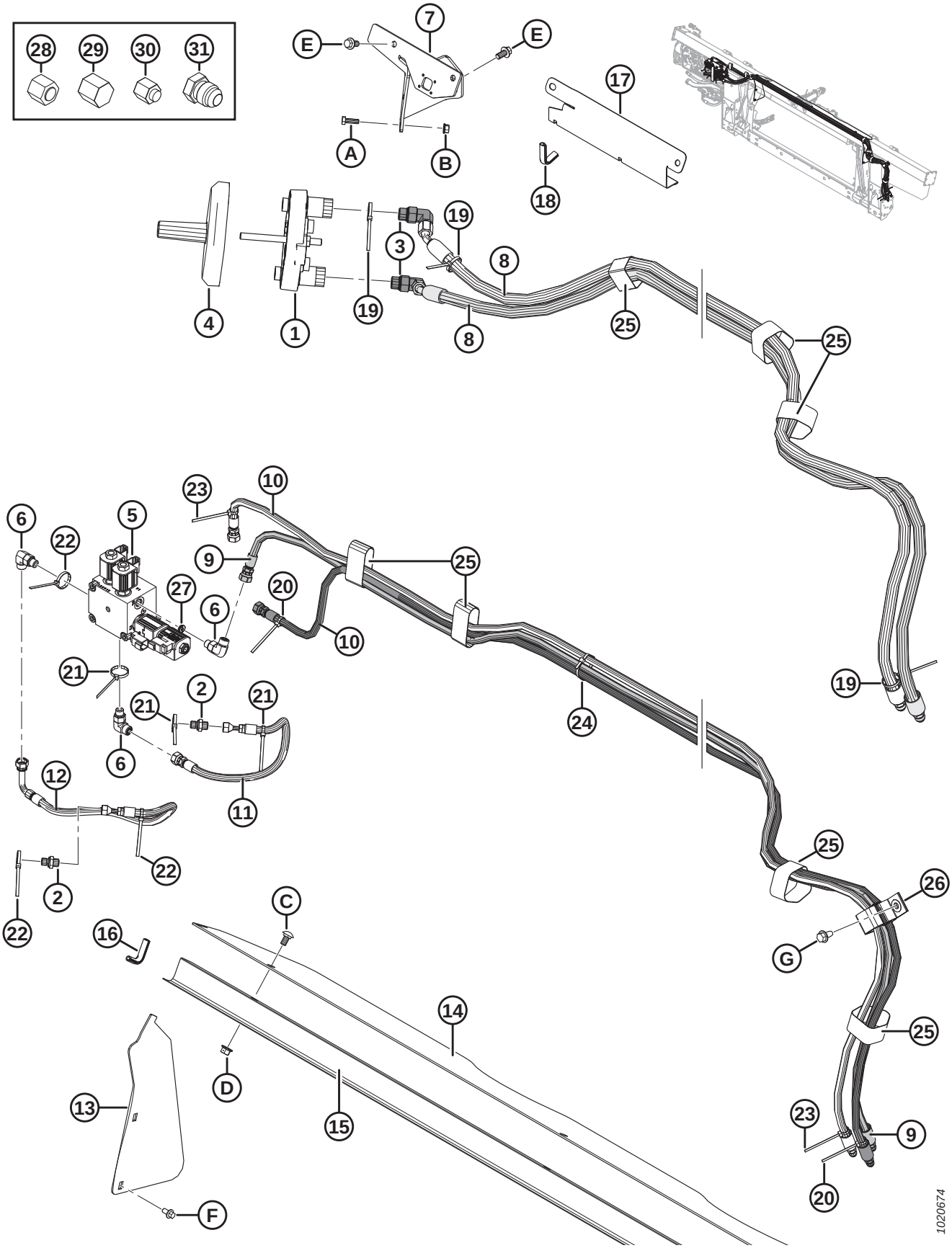

Ref	Part Number	Description	Qty	Serial Number
1	190866	COUPLER – LEXION MULTILINK	1	
2	136503	FITTING – ADAPTER -4 ORFS X -4 BSPP	2	
	135957	O-RING – #4 ORFS		
	136519	O-RING – #4 BSPP		
3	135917	FITTING – ELBOW 90° HYD	2	
	44210	O-RING – #10 ORB		
	135866	O-RING – #8 ORFS		
4	129481	COVER	1	
5	335341	MANIFOLD – SELECTOR, CLAAS	1	
	287462	COIL – 12VDC-0.625 IN. (V3)		
	287456	VALVE – 3-POS 4-WAY (V3)		
	245159	SEAL KIT (FOR VALVE MD #287456)		
	287461	COIL – 12VDC-0.500 IN. (V1, V2)		
	287460	VALVE – NC POPPET (V1, V2)		
	287465	SEAL KIT (FOR VALVE MD #287460)		
	279228	VALVE – CARTRIDGE, PO CHECK (CPD)		
	220959	SEAL KIT (FOR VALVE MD #279228)		
	163184	O-RING (2020 AND PRIOR) [438]		–396189
	320284	O-RING – 2.38 X 20.64		396190–
	136108	SCREW – HEX SOC HD M10 X 1.5 X 80-12.9-AA1J		
	184711	**WASHER – FLAT REG M10-200HV-AA1J**		
6	136095	FITTING – ELBOW 90° HYD	3	
	50219	O-RING – #6 ORB		
	135865	O-RING – #6 ORFS		
7	287344	SUPPORT – WELDMENT LEXION COUPLER	1	
8	287864	HOSE – HYD, REEL DRIVE	2	
9	287865	HOSE – HYD, REEL LIFT	1	
10	287866	HOSE – HYD, REEL FORE-AFT	2	
11	213374	HOSE – HYD, REEL PRESS	1	
12	287870	HOSE – HYD, REEL RETURN	1	
13	276284	COVER – FEED AUGER, SIDE	2	
14	276285	COVER – FEED AUGER, TOP	1	
15	156725	COVER – HOSE	1	
16	42589	MOULDING	2	
17	213965	COVER – HOSE (2016 AND PRIOR)	1	–301189
18	194082	MOULDING (2016 AND PRIOR)	1	–301189
19	40701	FASTENER – CABLE TIE (YELLOW)	3	
20	40702	FASTENER – CABLE TIE (RED)	2	
21	40703	FASTENER – CABLE TIE (BLUE)	3	
22	40704	FASTENER – CABLE TIE (ORANGE)	3	
23	49227	FASTENER – CABLE TIE (GREEN)	2	

438. Service part only for units made in model year 2020 and prior. For units made in model year 2021 and later, or for units serviced with manifold MD #335341, order O-ring MD #320284.

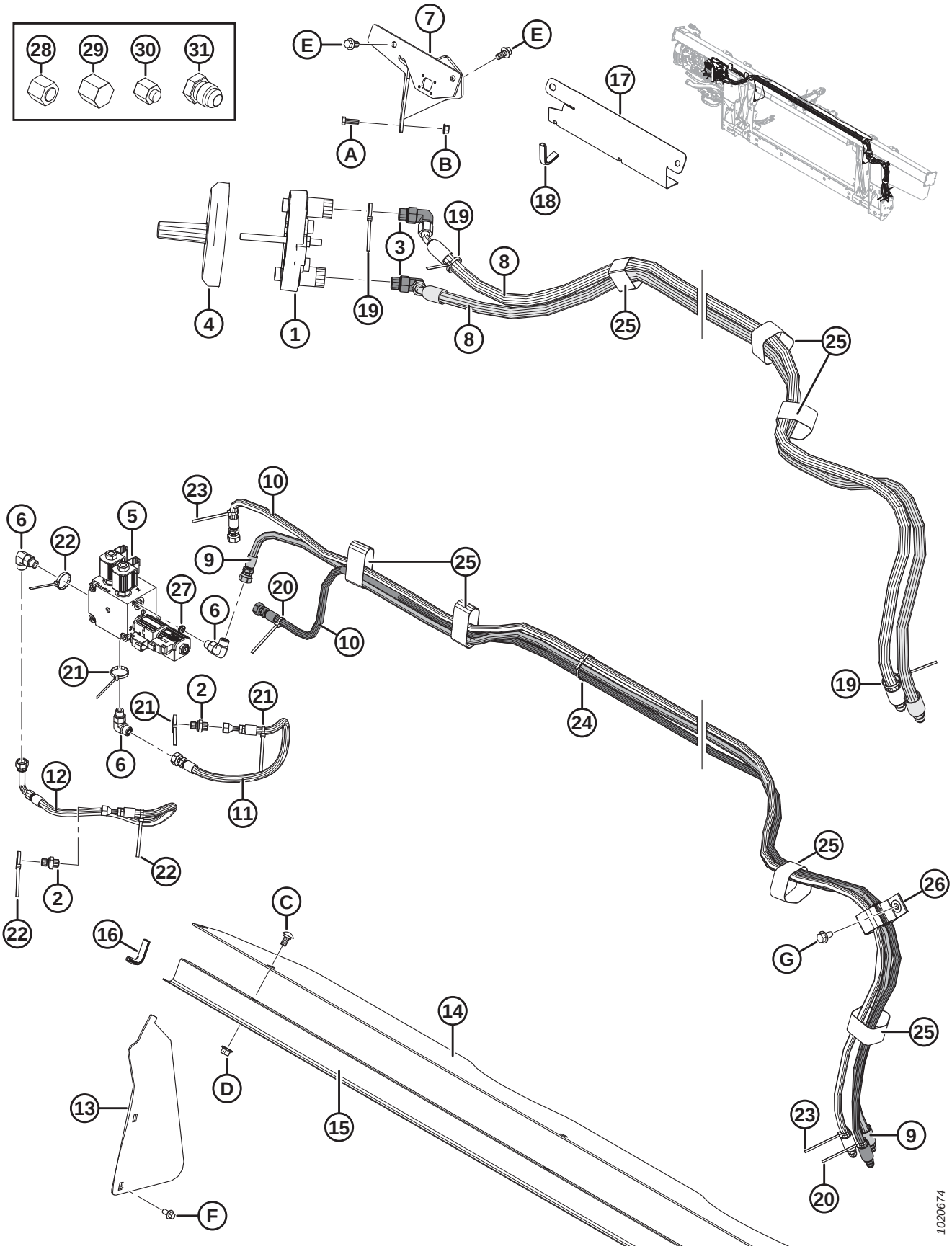
28
29
30
31
7
E
E
17
A
B
18
19
3
8
4
1
19
8
25
25
23
10
6
5
22
9
25
27
20
6
10
21
2
21
21
24
19
6
12
11
22
2
22
25
26
C
16
G
14
25
D
13
15
23
9
20
F
1020674

Ref	Part Number	Description	Qty	Serial Number
24	21763	FASTENER – CABLE TIE (BLACK)	3	
25	135444	FASTENER – CINCH STRAP 6 IN. LG	7	
26	163598	STRAP – VELCRO, HANGING	1	
27	252693	RESTRICTOR – #6 ORB X .052 IN.	1	
28	136325	CAP – HYD SAE-6 ORFS	2	
29	108233	CAP – 1/2 IN. TUBE (FOR SHIPPING ONLY)	2	
30	30813	CAP – 3/8 IN. TUBE 37 DEG FLARE (FOR SHIPPING ONLY)	3	
31	50178	PLUG – 3/8 IN. TUBE (FOR SHIPPING ONLY)	4	
A	184652	BOLT – HEX HD TFL M8 X 1.25 X 25-8.8-A2L		
B	135337	NUT – HEX FLG CTR LOC M8 X 1.25-8-A2L		
C	184657	BOLT – RHSSN M10 X 1.5 X 20-8.8-A3L		
D	135799	NUT – HEX FLG CTR LOC M10 X 1.5-10-A3L		
E	152655	BOLT – HEX FLG HD M10 X 1.5 X 20-8.8-A3L		
F	136485	BOLT – HEX FLG HD TFL M8 X 1.25 X 16-8.8-A3L		
G	136209	SCREW – HEX WASHER HD M10 X 1.5 X 20-450HV-A3L		

132 CLAAS Lexion 500/700 Series – Electrical Completion

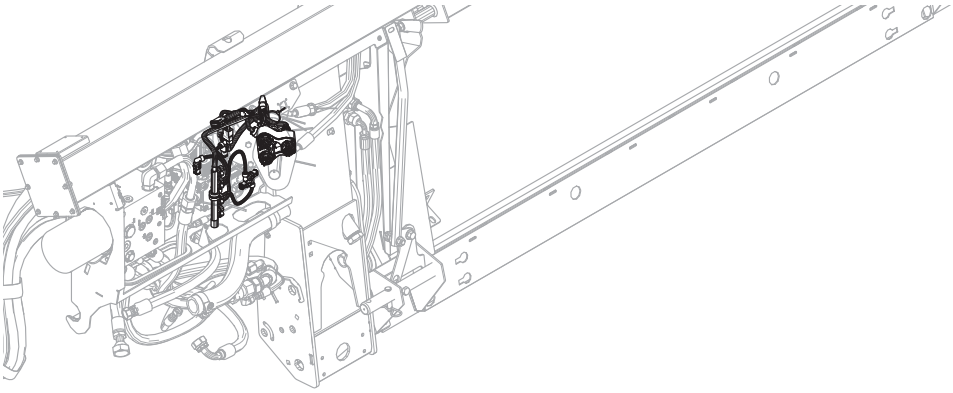

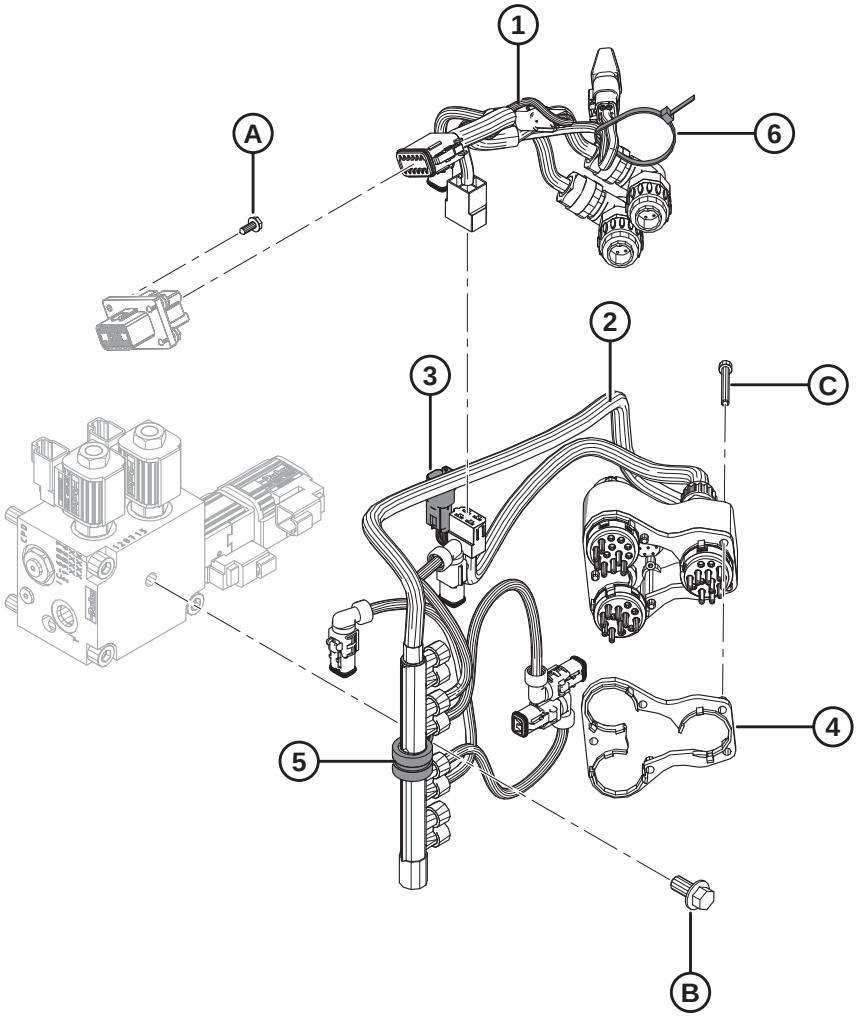

1020668

NOTE:

For specific electrical harness parts, refer to Electrical Connector Parts Catalog (MD #169641).

Ref	Part Number	Description	Qty	Serial Number
1	276806	HARNESS – FM100, COMPLETION, CLAAS	1	
	134746	CONNECTOR – CAP, PLUG, 12-WAY	1	
	283215	MODULE – DIODE PACK, 6A DIODE [439]	1	
2	276630	HARNESS – COUPLER, CLAAS [440]	1	
	129772	HARNESS – WIRING [441]	1	
3	213824	HARNESS – LEXION COUPLER MOD [441]	1	
4	129773	SPACER – WIRING HARNESS	1	
5	135709	CLAMP – INSULATED 3/4 IN.	1	
6	21763	FASTENER – CABLE TIE (BLACK)	1	
A	REF	SCREW – SELF TAPPING HEX WASH HD #10 X 1/2 ZP [442]		
B	152655	BOLT – HEX FLG HD M10 X 1.5 X 20-8.8-A3L		
C	129965	SCREW – HEX SOC HD M5 X 0.8 X 45-12.9-A2L		

439. Service part only for harness (MD #276806).
440. Includes harnesses (MD #129772 and 213824).
441. Service part only for harness (MD #276630).
442. Screw (MD #42292) not included in completion package. Refer to Section *113 Electrical Components – FM100, page 331*.

133 CLAAS Reel Height Resistor Kit

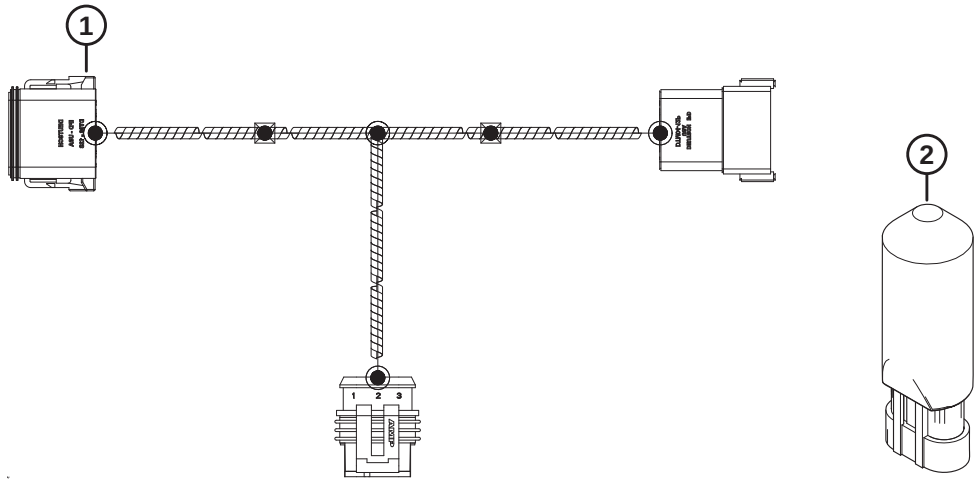

1023968

CLAAS REEL HEIGHT RESISTOR KIT

Ref	Part Number	Description	Qty	Serial Number
	295710	KIT – CLAAS REEL HEIGHT RESISTOR [443]		
1	301104	HARNESS – CLAAS REEL HT V-REG.	1	
2	133683	REGULATOR – VOLTAGE	1	

443. Kit includes listed parts.

134 John Deere 50 Series – Float Module Completion

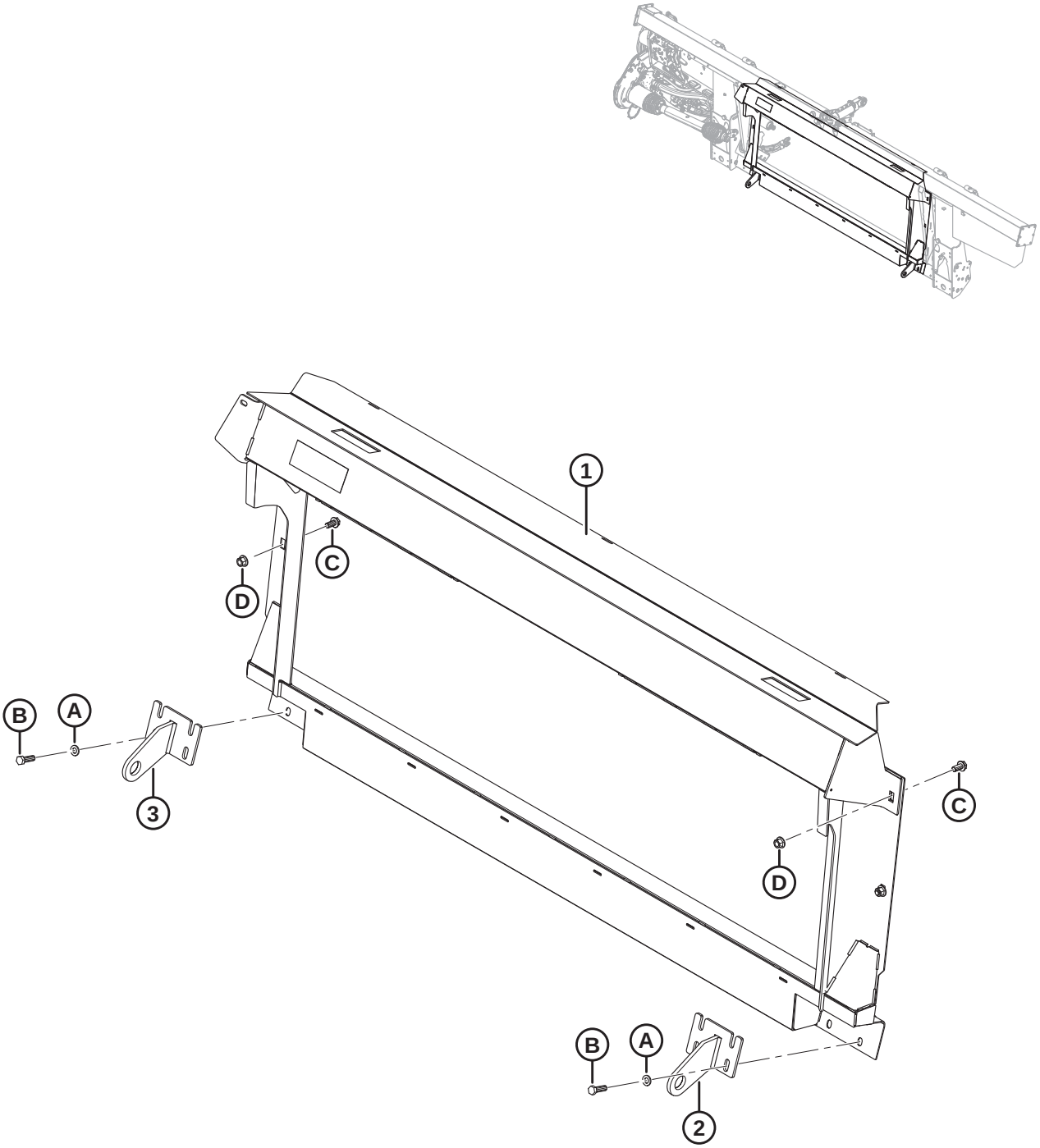

1033538

JOHN DEERE 50 SERIES – FLOAT MODULE COMPLETION

Ref	Part Number	Description	Qty	Serial Number
	B9030	**COMP PKG – JD 50 SERIES** [444]		
1	**294514**	**FRAME – JD WELDT LEVEL LAND**	**1**	
2	151942	BRACKET – RIGHT WELDT	1	
3	151941	BRACKET – LEFT WELDT	1	
A	184714	WASHER – FLAT REG M12-300HV		
B	184669	BOLT – HEX HD M12 X 1.75 X 40-8.8-AA1J		
C	136625	BOLT – HEX SER FLG HD M12 X 1.75 X 25 X SPCL-100-AA1J		
D	136431	NUT – HEX FLG CTR LOC M12 X 1.75-10		

444. JD 50 Series Completion Package includes float module, hydraulic, and electrical completion packages required to complete a stand-alone FM100 or to convert to an existing factory-installed FM100. Kits available through Whole Goods only.

135 John Deere 60/70 S/T Series – Float Module Completion

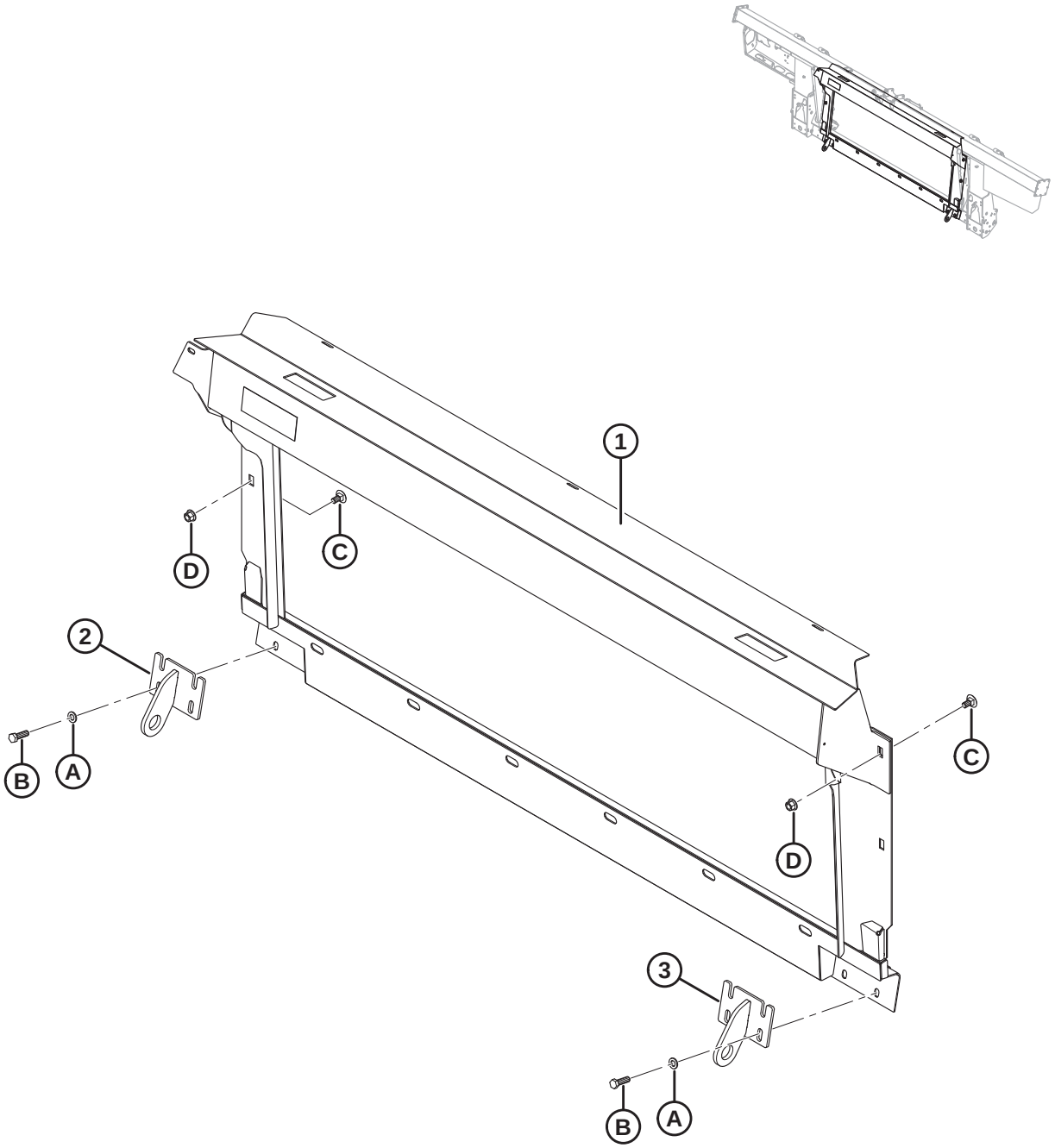

Ref	Part Number	Description	Qty	Serial Number
	B6962	**COMP PKG – JD 60/70 S SERIES** [445]		
	B6963	**COMP PKG – JD 60/70 T SERIES** [445]		
1	**347301**	**ASSEMBLY – JD CM TRANS FRAME W/DECAL (S SERIES W/ CONTOUR MASTER FEEDER HOUSE)**	**1**	
	294514	FRAME – JD WELDT LEVEL LAND (T OR S SERIES W/ LEVEL LAND FEEDER HOUSE)	1	
2	245760	BRACKET – LEFT WELDT (S SERIES ONLY)	1	
	151941	BRACKET – LEFT WELDT (T SERIES ONLY)	1	
3	245761	BRACKET – RIGHT WELDT (S SERIES ONLY)	1	
	151942	BRACKET – RIGHT WELDT (T SERIES ONLY)	1	
A	184714	WASHER – FLAT REG M12-300HV-A3L		
B	184669	BOLT – HEX HD M12 X 1.75 X 40-8.8-A3L		
C	136625	BOLT – HEX SER FLG HD M12 X 1.75 X 25 X SPCL-100-AA1J		
D	136431	NUT – HEX FLG CTR LOC M12 X 1.75-10-A3L		

445. Includes float module, hydraulic, and electrical completion packages required to complete a stand-alone FM100 or to convert to an existing factory-installed FM100. Kits available through Whole Goods only.

136 John Deere 50 Series – Hydraulic Completion

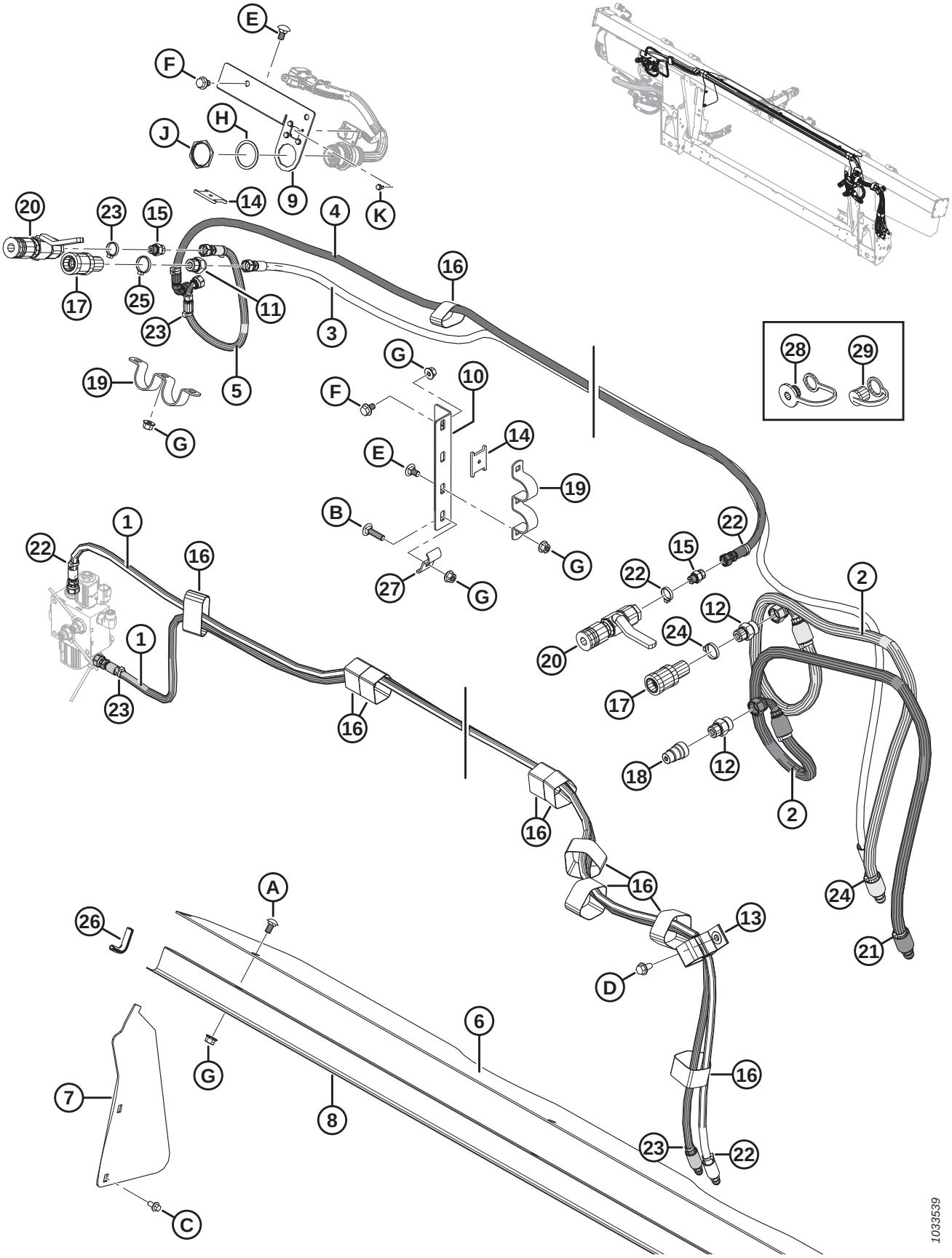

JOHN DEERE 50 SERIES – HYDRAULIC COMPLETION

Ref	Part Number	Description	Qty	Serial Number
1	287861	HOSE – HYD, REEL F-A	2	
2	337178	HOSE – REEL DRIVE JD50	2	
3	337175	HOSE – REEL LIFT JD50	1	
4	337174	HOSE – REEL FORE JD50	1	
5	337173	HOSE – REEL AFT JD50	1	
6	276285	COVER – FEED AUGER, TOP	1	
7	276284	COVER – FEED AUGER-SIDE	2	
8	156725	COVER – HOSE	1	
9	337163	SUPPORT – HYD. COUPLER	1	
10	337177	SUPPORT – HYD. COUPLER	1	
11	184462	FITTING – ADAPTER HYD	1	
	44210	O-RING – #10 ORB		
	135865	O-RING – #6 ORFS		
12	184461	FITTING – ADAPTER HYD	2	
	44210	O-RING – #10 ORB		
	135867	O-RING – #10 ORFS		
13	163598	CINCH STRAP, HANGING, 6 IN. LG	1	
14	158253	SPACER – COUPLER MTG	2	
15	135778	FITTING – ADAPTER	2	
	50219	O-RING – #6 ORB		
	135865	O-RING – #6 ORFS		
16	135444	CINCH STRAP 6 IN. LG	10	
17	114143	FITTING – COUPLING HYD	2	
18	114142	FITTING – COUPLING HYD	1	
19	114140	HOLDER	2	
20	114120	FITTING – COUPLING HYD	2	
21	49232	FASTENER – CABLE TIE, WHITE	2	
22	49227	FASTENER – CABLE TIE, GREEN	8	
23	40702	FASTENER – CABLE TIE, RED	5	
24	40701	FASTENER – CABLE TIE, YELLOW	3	
25	21763	FASTENER – CABLE TIE, BLACK	4	
26	42589	MOULDING	2	
27	29934	HOLDER	1	
28	21858	PLUG – DUST	2	
29	21856	CAP – DUST	1	
A	184657	BOLT – RHSSN M10 X 1.5 X 20-8.8-AA1J		
B	152732	BOLT – RHSN M10 X 1.5 X 40-8.8-AA1J		
C	136485	BOLT – HEX FLG HD TFL M8 X 1.25 X 16-8.8-AA1J		
D	136209	SCREW – HEX WSHR M10 X 1.5 X 20-450HV		
E	136178	BOLT – RHSN M10 X 1.5 X 20-8.8-AA1J		
F	136151	BOLT – HEX FLG HD TFL M10 X 1.5 X 16-8.8-AA1J		
G	135799	NUT – HEX FLG CTR LOC M10 X 1.5-10		
H	134011	WASHER – LOCK SPRING, DEUTSCH HD, SIZE 24		
J	134010	NUT – PANEL, HD30, SIZE 24		
K	42292	SCREW – TPG HEX WSH HD #10 X 1/2-GR5-AA1T		

137 John Deere 60/70 S/T Series – Hydraulic Completion

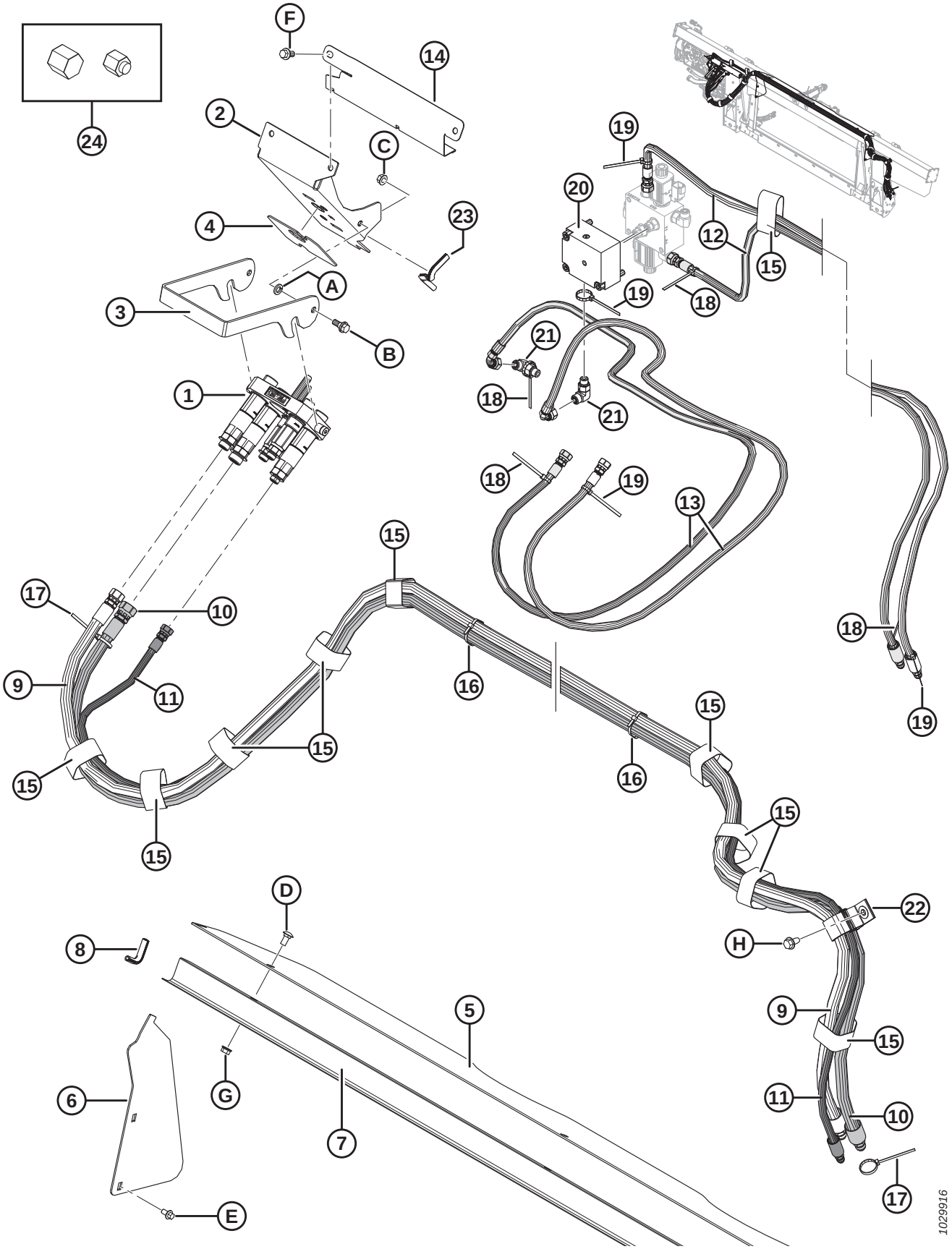

NOTE:

Some completion packages may have been shipped with a Parker multicoupler (not sold separately). Service parts for Parker multicouplers include plate assembly (MD #182182), three 1/2 inch female couplers (MD #184460), two 3/8 inch couplers (MD #191704), 1/2 inch seal kit (MD #129860), 3/8 inch seal kit (MD #129859), two fittings (MD #191705), fitting (MD #184461), fitting (MD #184463), two bushings (MD #182181), adapter fitting (MD #184462), and two screws (MD #184524). Parker multicoupler service parts are **NOT** interchangeable with Faster multicoupler (MD #279718) service parts. To replace the entire multicoupler, order Faster multicoupler (MD #279718).

Ref	Part Number	Description	Qty	Serial Number
1	279718	COUPLING – MULTI JD (FASTER)	1	
	294097	KIT – COUPLER PLATE ASSY, JD (FASTER) [446]		
	279011	KIT – COUPLER, 3/8 C/W 3/8 IN. FITTING, RED/GREEN (FASTER) [446]	2	
	279012	KIT – COUPLER, 9/16 C/W 5/8 IN. FITTING, YELLOW (FASTER) [446]	1	
	279013	KIT – COUPLER, 9/16 C/W 1/2 IN. FITTING, WHITE (FASTER) [446]	1	
	279014	KIT – COUPLER, 9/16 C/W 3/8 IN. FITTING, BLUE (FASTER) [446]	1	
	279034	SEAL – 3/8 COUPLER (FASTER) [446]		
	279035	SEAL – 9/16 COUPLER (FASTER) [446]		
2	213264	BRACKET – JD COUPLER	1	
3	248960	LATCH – COUPLER BRACKET	1	
4	129149	PAD – RUBBER	1	
5	276285	COVER – FEED AUGER, TOP	1	
6	276284	COVER – FEED AUGER, SIDE	2	
7	156725	COVER – HOSE	1	
8	42589	MOULDING	2	
9	287860	HOSE – HYD, REEL DR (JD)	1	
10	287312	HOSE – HYD, REEL DR (JD)	1	
11	287863	HOSE – HYD, REEL LIFT (JD)	1	
12	287861	HOSE – HYD, REEL FORE-AFT (JD)	2	
13	287862	HOSE – HYD, REEL FORE-AFT (JD)	2	
14	213965	COVER – HOSE	1	
15	135444	FASTENER – CINCH STRAP 6 IN. LG	11	
16	21763	FASTENER – CABLE TIE (BLACK)	3	
17	40701	FASTENER – CABLE TIE (YELLOW)	2	
18	40702	FASTENER – CABLE TIE (RED)	5	
19	49227	FASTENER – CABLE TIE (GREEN)	5	

446. Service part for Faster multicoupler (MD #279718) only. **NOT** interchangeable with Parker multicoupler (not sold separately) service parts.

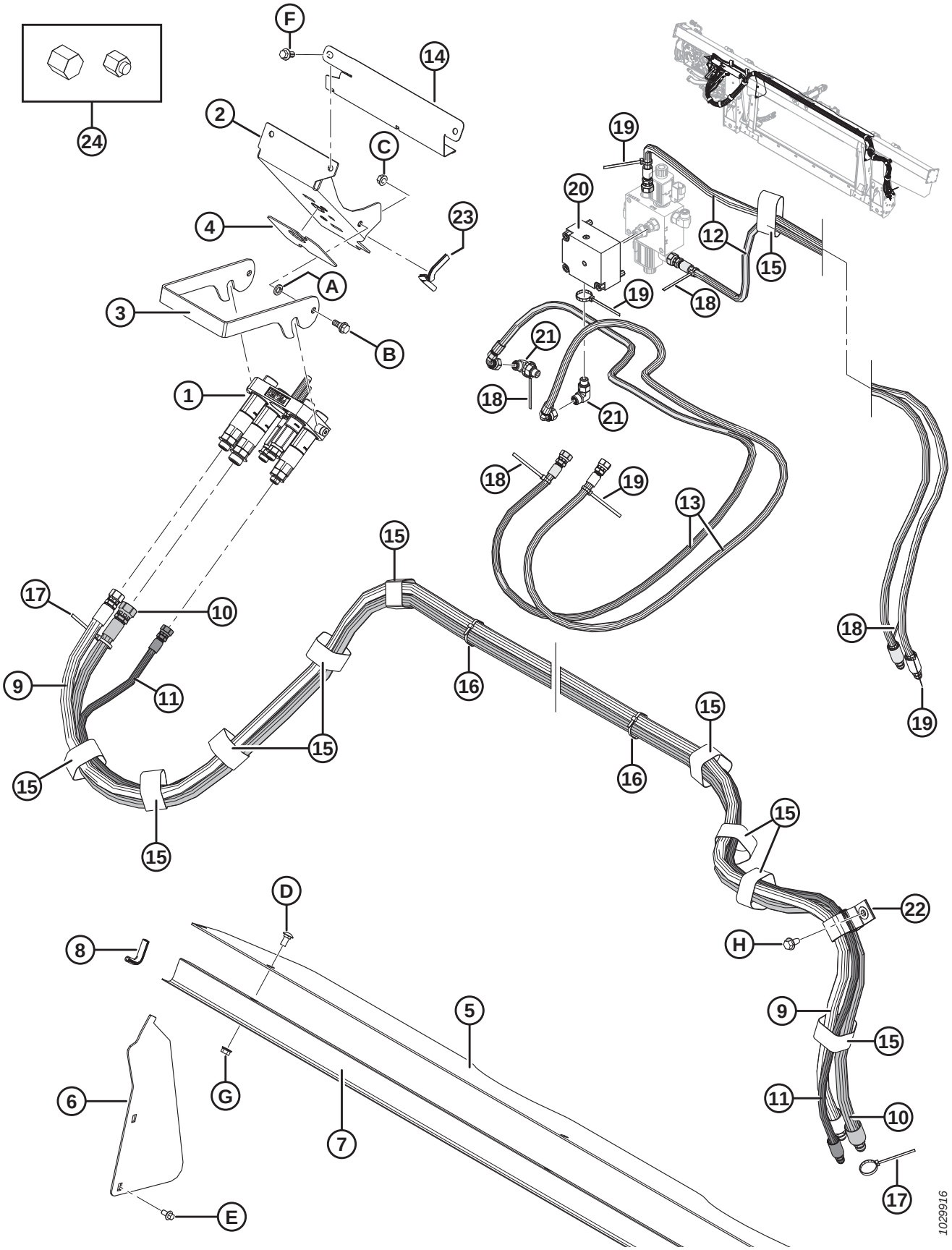
F
14
24
2
C
19
20
23
4
12
15
A
3
19
18
B
21
1
18
21
18
19
13
15
17
10
18
9
11
16
19
15
15
16
15
15
15
D
22
8
H
5
9
15
6
G
11
10
7
17
E
1029916

Ref	Part Number	Description	Qty	Serial Number
20	335342	VALVE – CHECK	1	
	279228	VALVE – CARTRIDGE, PO CHECK		
	163184	O-RING (2020 AND PRIOR) [447]		–396189
	320284	O-RING – 2.38 X 20.64		396190–
	220959	SEAL KIT		
	184711	**WASHER – FLAT REG M10-200HV-AA1J**		
21	136095	FITTING – ELBOW 90° HYD	2	
22	163598	STRAP – VELCRO, HANGING	1	
23	42074	MOULDING	1	
24	108233	CAP – 1/2 IN. TUBE (FOR SHIPPING ONLY)	2	
	30813	CAP – 3/8 IN. TUBE 37 DEG FLARE (FOR SHIPPING ONLY)	3	
A	18652	WASHER – REG. LOCK 7/16 IN. NOM. I.D. ZP		
B	27647	BOLT – SHOULDER		
C	30228	NUT – FLANGE DT SMTH FACE 0.375-16 UNC		
D	184657	BOLT – RHSSN M10 X 1.5 X 20-8.8-A3L		
E	136485	BOLT – HEX FLG HD TFL M8 X 1.25 X 16-8.8-A3L		
F	152655	BOLT – HEX FLG HD M10 X 1.5 X 20-8.8-A3L		
G	135799	NUT – HEX FLG CTR LOC M10 X 1.5-10-A3L		
H	136209	SCREW – HEX WASHER HD M10 X 1.5 X 20-450HV-A3L		

447. Service part only for units made in model year 2020 and prior. For units made in model year 2021 and later, or for units serviced with manifold MD #335342, order O-ring MD #320284.

138 John Deere 50 Series – Electrical Completion

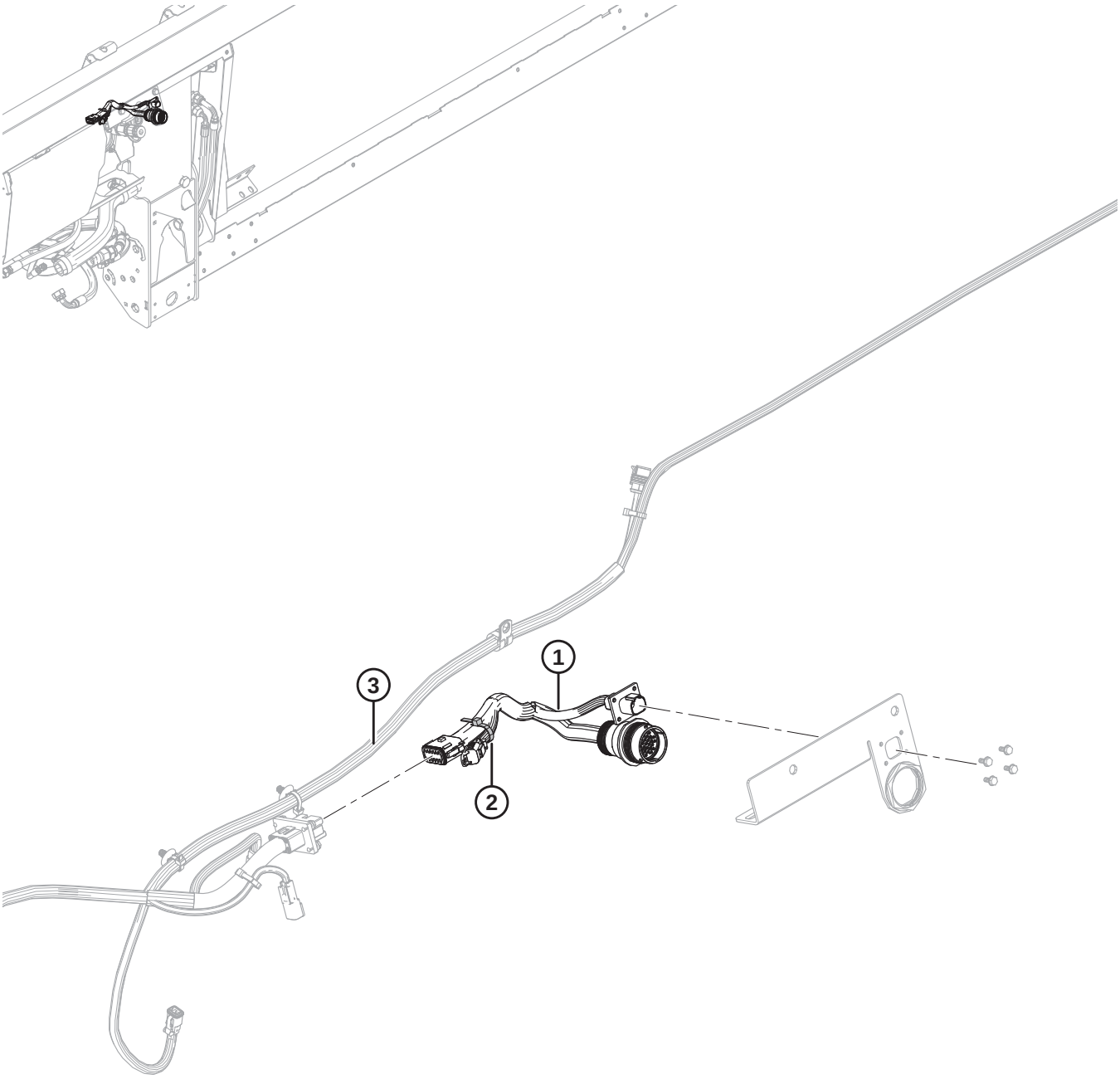

1033540

NOTE:

For specific electrical harness parts, refer to Electrical Connector Parts Catalog (MD #169641).

Ref	Part Number	Description	Qty	Serial Number
1	337168	HARNESS – FM100, COMP, JD50	1	
	134948	DUST CAP – DEUTSCH, HDP20	1	
	134746	CONNECTOR – CAP, PLUG, 12 WAY	1	
2	21763	FASTENER – CABLE TIE, BLACK	1	
3	REF	HARNESS – FM100, MAIN	1	

139 John Deere 60/70 S/T Series – Electrical Completion

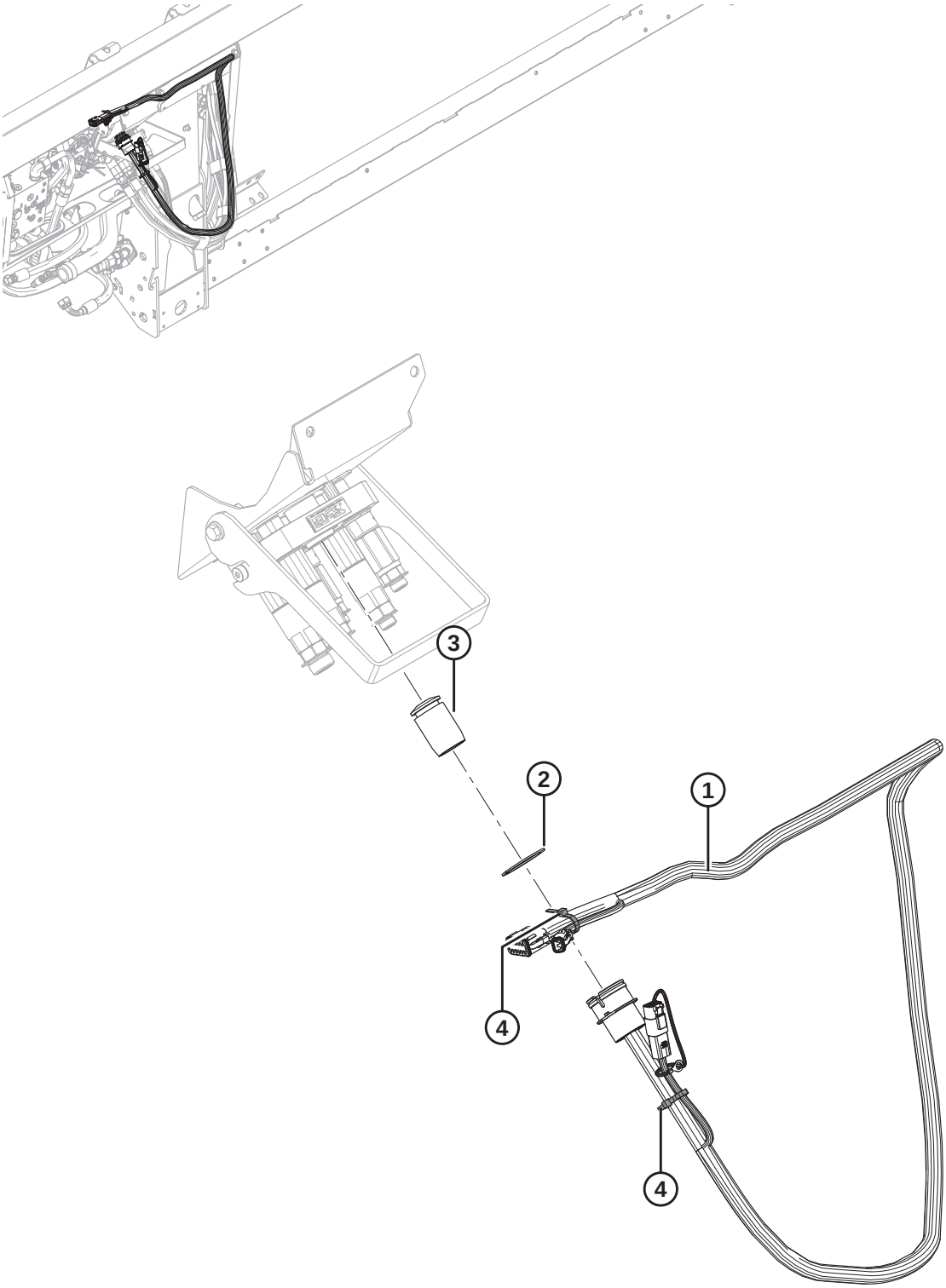

1020077

NOTE:

For specific electrical harness parts, refer to Electrical Connector Parts Catalog (MD #169641).

Ref	Part Number	Description	Qty	Serial Number
1	258107	HARNESS – FM100, COMPLETION, JOHN DEERE	1	
	134741	CAP – PLUG, DEUTSCH, DT, 2 POS.	1	
	134746	CONNECTOR – CAP, PLUG, 12-WAY	1	
2	135267	RING – INVERTED EXT RETAINING	1	
3	129148	PLUG – RUBBER	1	
4	21763	FASTENER – CABLE TIE (BLACK)	2	

140 Versatile – Float Module Completion

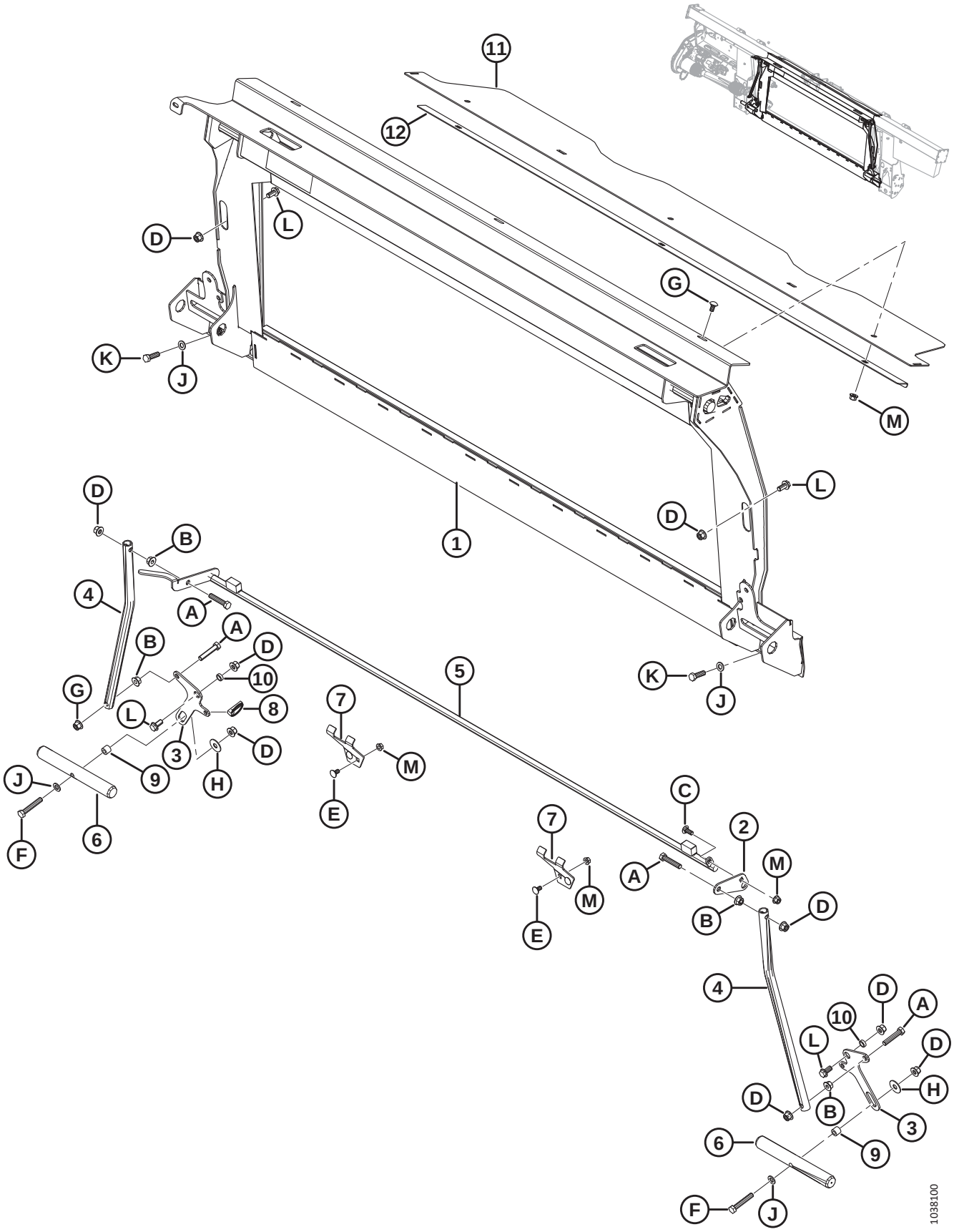

VERSATILE – FLOAT MODULE COMPLETION

Ref	Part Number	Description	Qty	Serial Number
	B6961	**COMP PKG – VERSATILE** [448]		
1	**347077**	**FRAME – TRANSITION W/DECAL**	**1**	
2	**328582**	**LEVER**	**1**	
3	**347569**	**LEVER – PIVOT**	**2**	
4	156783	TUBE – LINK	2	
5	**337311**	**LATCH – TRANSFER WELDMENT**	**1**	
6	133138	SHAFT	2	
7	245246	SUPPORT – LOCK KEEPER	2	
8	**113561**	**PIN – LYNCH**	**1**	
9	**337043**	**BUSHING – M12 THREADED**	**2**	
10	133439	SPACER – 0.75 O.D. X 0.120 IN. WALL	2	
11	**328356**	**COVER – FEED AUGER TOP**	**1**	
12	**301629**	**RETAINER – DUST COVER**	**1**	
A	**237316**	**BOLT – HEX HD TFL M12 X 1.75 X 60-8.8-AA1J**		
B	**136036**	**NUT – HEX SM FLG M12 X 1.75-8-AA1J**		
C	**136506**	**BOLT – RHSSN M10 X 1.5 X 25-8.8-AA1J**		
D	**136431**	**NUT – HEX FLG CTR LOC M12 X 1.75-10-A3L**		
E	**136178**	**BOLT – RHSN M10 X 1.5 X 20-8.8-AA1J**		
F	**184675**	**BOLT – HEX HD M12 X 1.75 X 70-8.8-AA1J**		
G	**184657**	**BOLT – RHSSN M10 X 1.5 X 20-8.8-AA1J**		
H	32247	WASHER – FLAT		
J	184714	WASHER – FLAT REG M12-300HV-A3L		
K	184669	BOLT – HEX HD M12 X 1.75 X 40-8.8-A3L		
L	136625	BOLT – HEX SER FLG HD M12 X 1.75 X 25 X SPCL-100-AA1J		
M	**135799**	**NUT – HEX FLG CTR LOC M10 X 1.5-10**		

448. Versatile Completion Package includes float module, hydraulic, and electrical completion packages required to complete a stand-alone FM100 or to convert to an existing factory-installed FM100. Kits available through Whole Goods only.

141 Versatile – Hydraulic Completion

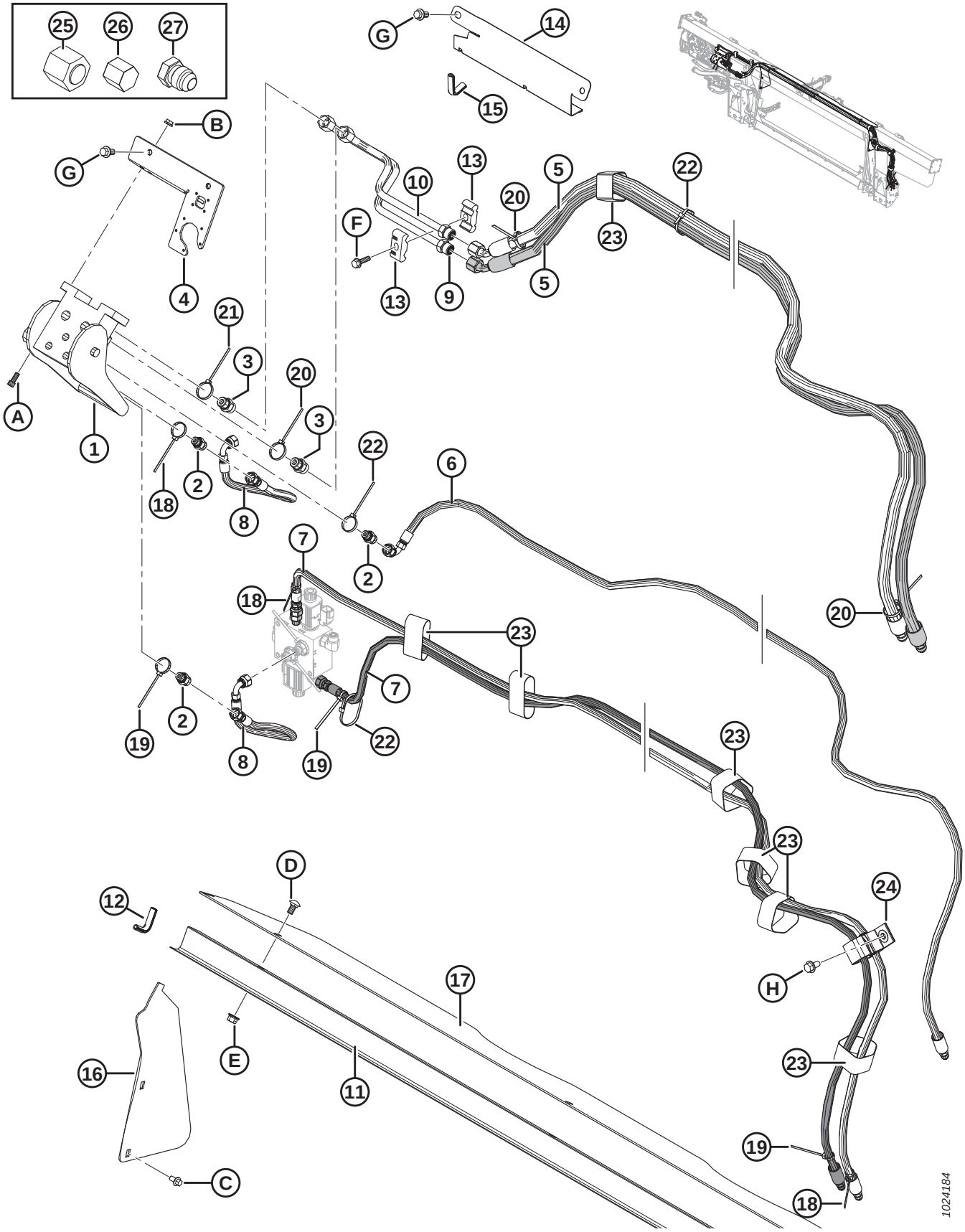

VERSATILE – HYDRAULIC COMPLETION

Ref	Part Number	Description	Qty	Serial Number
1	153151	COUPLING – MULTI	1	
	129800	COVER – KIT		
	129801	LATCH – BUTTON KIT		
	129976	COUPLING – 1/4 IN.		
	129977	COUPLING – 3/8 IN.		
2	252694	FITTING – ADAPTER, .052 ORIFICE	3	
	50219	O-RING – #6 ORB		
	135865	O-RING – #6 ORFS		
3	135780	FITTING – ADAPTER	2	
	44209	O-RING – #8 ORB		
	135866	O-RING – #8 ORFS		
4	301693	KIT – CNH ELECTRICAL COVER	1	
5	213182	HOSE – HYD, REEL DRIVE	2	
6	213184	HOSE – HYD, REEL LIFT	1	
7	213350	HOSE – HYD, REEL FORE-AFT	2	
8	213354	HOSE – HYD, FORE-AFT	2	
9	213204	LINE – REEL DRIVE PRESS	1	
10	213205	LINE – REEL DRIVE RETURN	1	
11	156725	COVER – HOSE	1	
12	42589	MOULDING	2	
13	37167	CLAMP	2	
14	213965	COVER – HOSE (2016–PRIOR)	1	–301189
15	194082	MOULDING (2016–PRIOR)	1	–301189
16	276284	COVER – FEED AUGER, SIDE	2	
17	276285	COVER – FEED AUGER, TOP	1	
18	49227	FASTENER – CABLE TIE (GREEN)	3	
19	40702	FASTENER – CABLE TIE (RED)	3	
20	40701	FASTENER – CABLE TIE (YELLOW)	3	
21	49232	FASTENER – CABLE TIE (WHITE)	1	
22	21763	FASTENER – CABLE TIE (BLACK)	7	
23	135444	FASTENER – CINCH STRAP 6 IN. LG	7	
24	163598	STRAP – VELCRO, HANGING	1	
25	136325	CAP – HYD SAE-6 ORFS	1	
26	108233	CAP – 1/2 IN. TUBE (FOR SHIPPING ONLY)	2	
	30813	CAP – 3/8 IN. TUBE 37 DEG FLARE (FOR SHIPPING ONLY)	3	
27	50178	PLUG – 3/8 IN. TUBE (FOR SHIPPING ONLY)	4	
A	135397	BOLT – SOCKET HD (HEX) 5/16 NC X 3/4		
B	30280	NUT – FLG SIDE LK SMTH FACE 5/16 NC GR 5 ZP		
C	136485	BOLT – HEX FLG HD TFL M8 X 1.25 X 16-8.8-A3L		
D	184657	BOLT – RHSSN M10 X 1.5 X 20-8.8-A3L		
E	135799	NUT – HEX FLG CTR LOC M10 X 1.5-10-A3L		
F	252655	BOLT – HEX HD TFL M8 X 1.25 X 30-8.8-A3L		

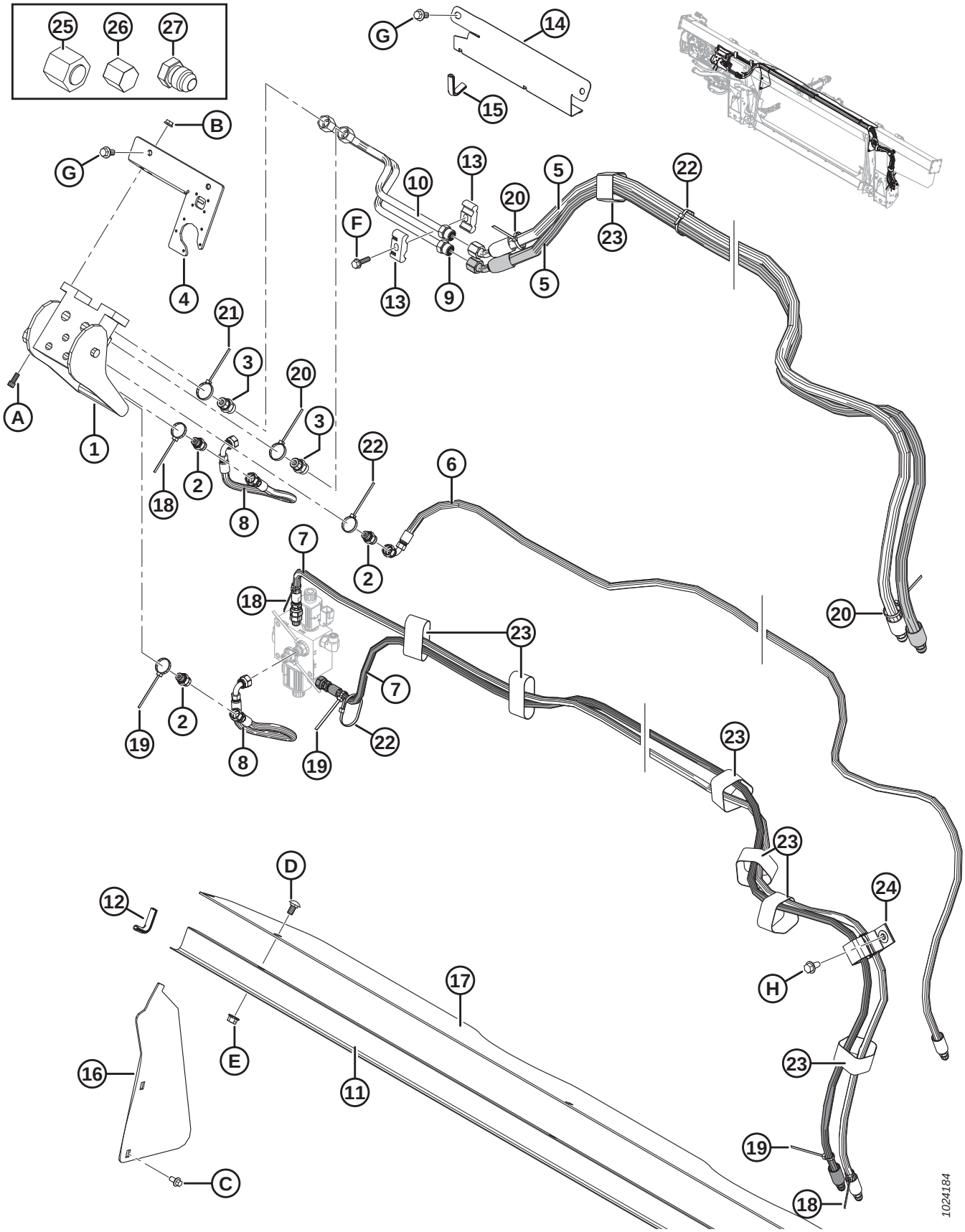
25
26
27
G
14
15
B
G
4
10
13
20
5
22
F
13
9
5
23
21
3
20
3
A
1
18
2
8
22
6
7
2
18
20
23
7
19
2
8
19
22
23
23
D
12
24
H
17
E
16
11
23
19
C
18
1024184

Ref	Part Number	Description	Qty	Serial Number
G	152655	BOLT – HEX FLG HD M10 X 1.5 X 20-8.8-A3L		
H	136209	SCREW – HEX WASHER HD M10 X 1.5 X 20-450HV-A3L		

142 Versatile – Electrical Completion

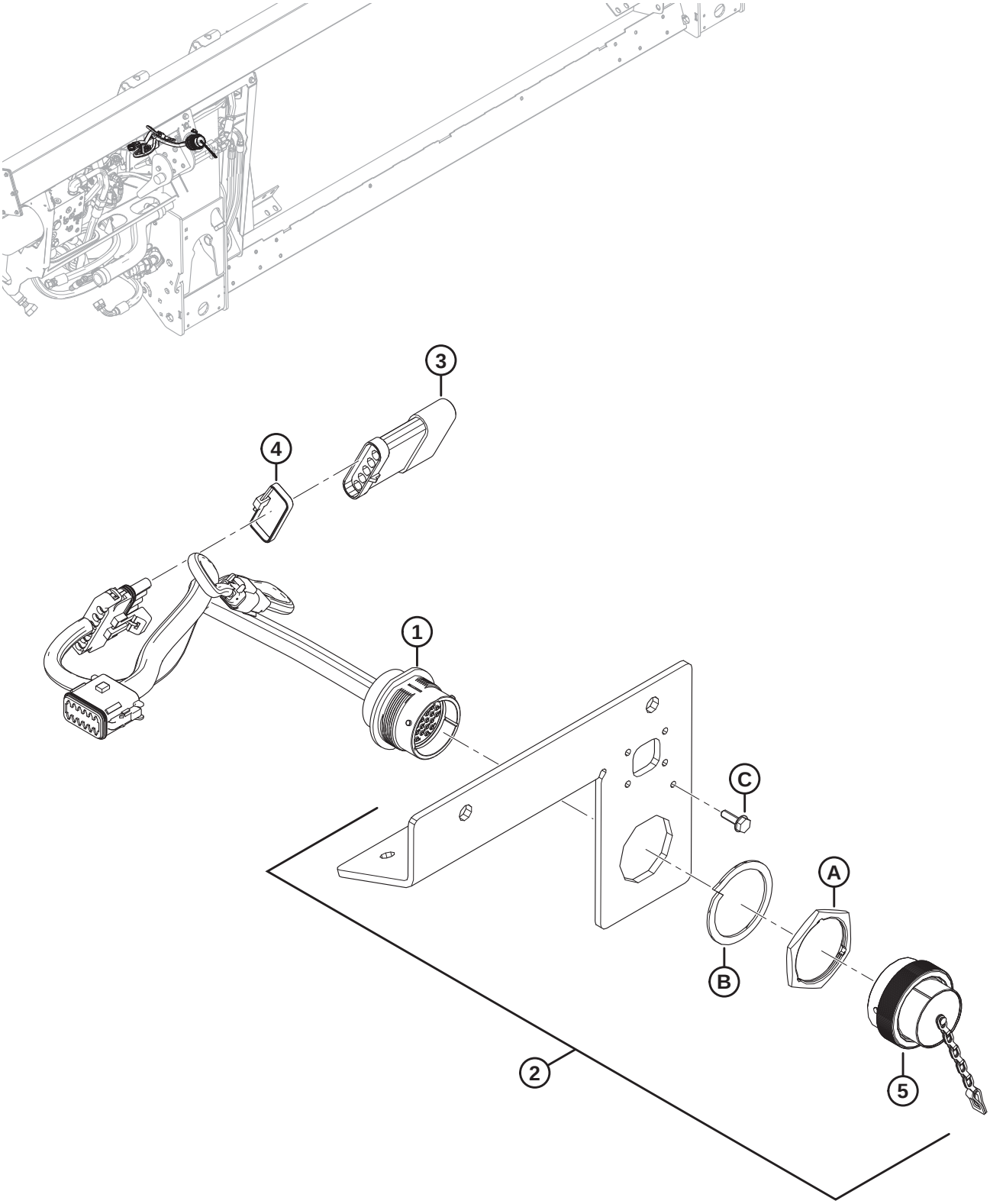

VERSATILE – ELECTRICAL COMPLETION

NOTE:

For specific electrical harness parts, refer to Electrical Connector Parts Catalog (MD #169641).

Ref	Part Number	Description	Qty	Serial Number
1	213211	HARNESS – FM100, COMPLETION	1	
	134746	CONNECTOR – CAP, PLUG, 12-WAY	1	
2	301693	KIT – CNH ELECTRICAL COVER	1	
3	153933	RESISTOR – HEADER RECOGNITION	1	
4	30753	FASTENER – CABLE TIE (BLACK)	1	
5	134053	CAP – PLUG, HD30, SIZE 24	1	
A	134010	NUT – PANEL, HD30, SIZE 24		
B	134011	WASHER – LOCK SPRING, DEUTSCH HD, SIZE 24		
C	21947	SCREW – SELF TAPPING HEX WASH HD #10 X 5/8 ZP		

143 Auger Conversion Kits – Fingers and Flighting

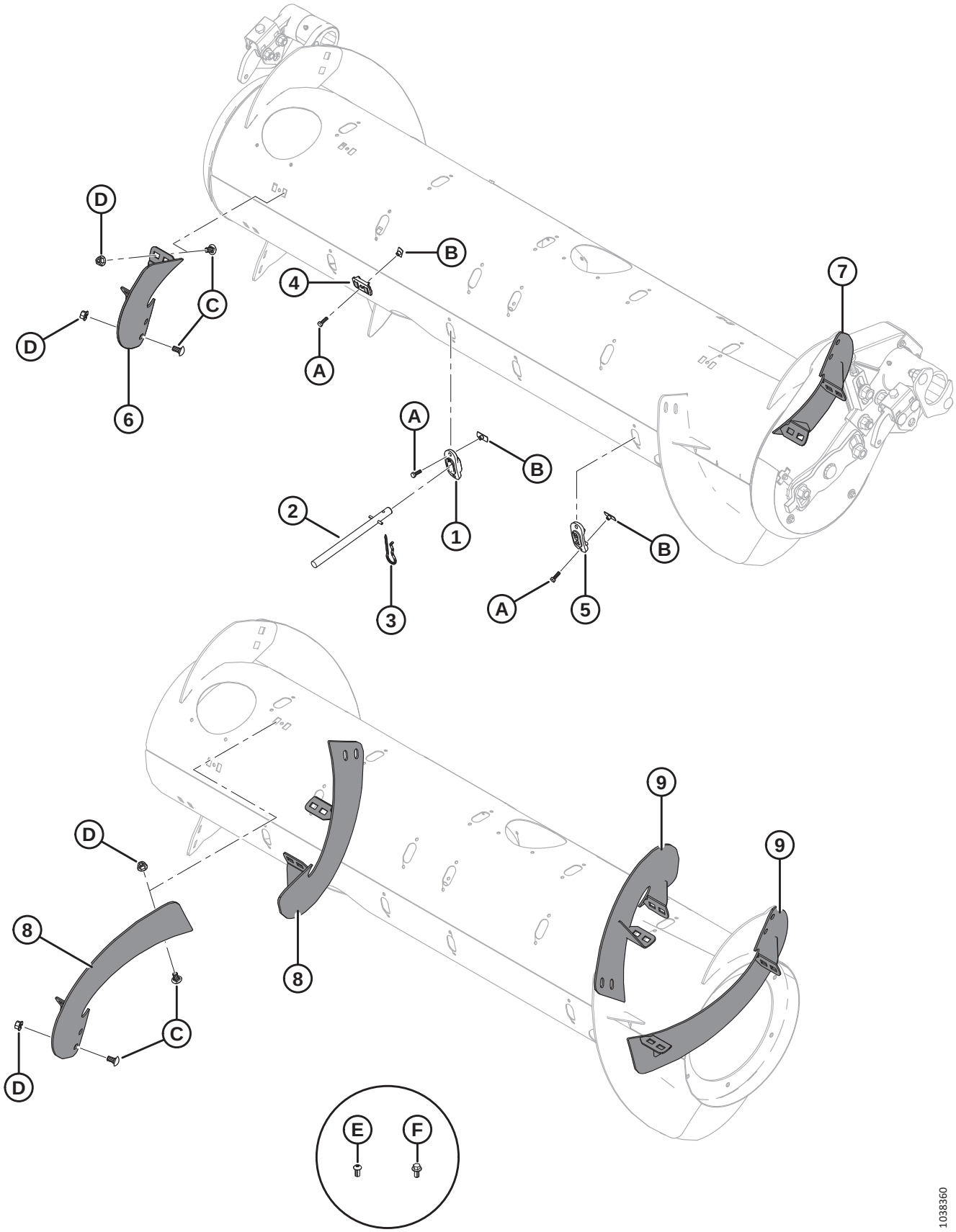

AUGER CONVERSION KITS – FINGERS AND FLIGHTING

Ref	Part Number	Description	Qty	Serial Number
	B7343	**KIT – FEED AUGER FINGERS, 4 PCS** [449]		
	B7344	**KIT – FLIGHTING, SHORT HI-WEAR** [450]		
	B7345	**KIT – FLIGHTING, LONG HI-WEAR** [451]		
	357233	**KIT – FLIGHTING, SHORT HI-WEAR** [452]		
	357234	**KIT – FLIGHTING, LONG HI-WEAR** [453]		
1	337143	GUIDE	4	
2	337152	KIT – FINGER [454]	4	
3	123180	PIN – HAIR	4	
4	213084	PLUG – FLIGHTING SLOT	4	
5	187137	PLUG [455]		
6	287887	FLIGHTING, RTD – RH, MED (HI WEAR)	1	
7	287888	FLIGHTING, RTD – LH, MED (HI WEAR)	1	
8	287890	FLIGHTING, RTD – RH, LONG(HI WEAR)	2	
9	287889	FLIGHTING, RTD – LH, LONG(HI WEAR)	2	
A	252703	BOLT – HEX HD TFL M6 X 1 X 20 X SPCL-12.9-AA2L		
B	197263	NUT – TEE M6 X 1		
C	136178	BOLT – RHSN M10 X 1.5 X 20-8.8-AA1J		
D	135799	NUT – HEX FLG CTR LOC M10 X 1.5-10-A3L		
E	135723	SCREW – HEX SOC BTN HD M10 X 1.5 X 20-10.9-AA1J [456]		
F	152655	BOLT – HEX FLG HD M10 X 1.5 X 20-8.8-AA1J [457]		

449. Includes four solid fingers (MD #337152), guides (MD #337143), hair pins (MD #123180), flighting slots plugs (MD #213084), and hardware. Kits available through Whole Goods only.
450. Includes one pair of short flighting (MD #287887 and 287888), four flighting slots plugs (MD #213084), four plugs (MD #187137), and hardware. Kits available through Whole Goods only.
451. Includes two pairs of long flighting (MD #287889 and 287890), twelve plugs (MD #187137), and hardware. Kits available through Whole Goods only.
452. Includes one pair of short flighting (MD #287887 and 287888), four flighting slots plugs (MD #213084), four plugs (MD #187137), hardware, and instructions.
453. Includes two pairs of long flighting (MD #287889 and 287890), twelve plugs (MD #187137), hardware, and instructions.
454. Includes solid finger (not sold separately), spring pin (MD #7642), guide (MD #337143), and instructions.
455. Quantities: B7344 = 4; B7345 = 12
456. For Ultra Narrow Configuration only; used on the new holes drilled in the flighting.
457. For Ultra Narrow Configuration only; used on the new holes drilled in the feed auger.

144 Gear Pump Conversion Kits

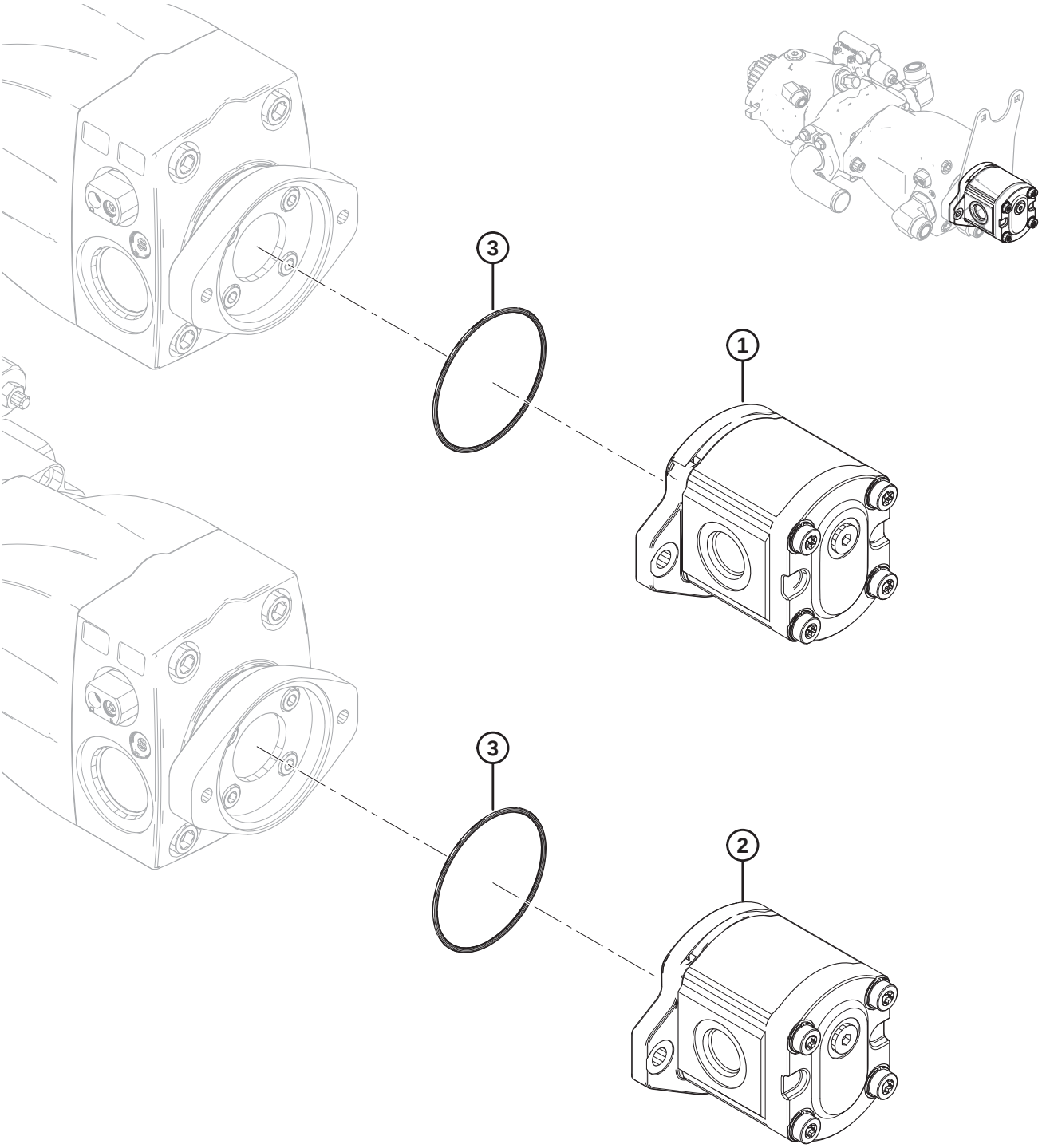

1027781

GEAR PUMP CONVERSION KITS

Ref	Part Number	Description	Qty	Serial Number
	B6193	KIT – PUMP CONVERSION (CNH/CLAAS) [458]		
	B6194	KIT – PUMP CONVERSION (JD/AGCO/GLEANER) [459]		
1	187252	PUMP – GEAR, 16 CC, CASAPPA (CNH/CLAAS)	1	
	187918	SEAL KIT – GEAR PUMP		
2	295998	PUMP – GEAR, 19 CC, CASAPPA (JD/AGCO/GLEANER)	1	
	187918	SEAL KIT – GEAR PUMP		
3	136024	O-RING	1	

458. Includes gear pump (MD #187252) and O-ring (MD #136024). Kits available through Whole Goods only.
459. Includes gear pump (MD #295998) and O-ring (MD #136024). Kits available through Whole Goods only.

145 Gear Set Conversion Kits

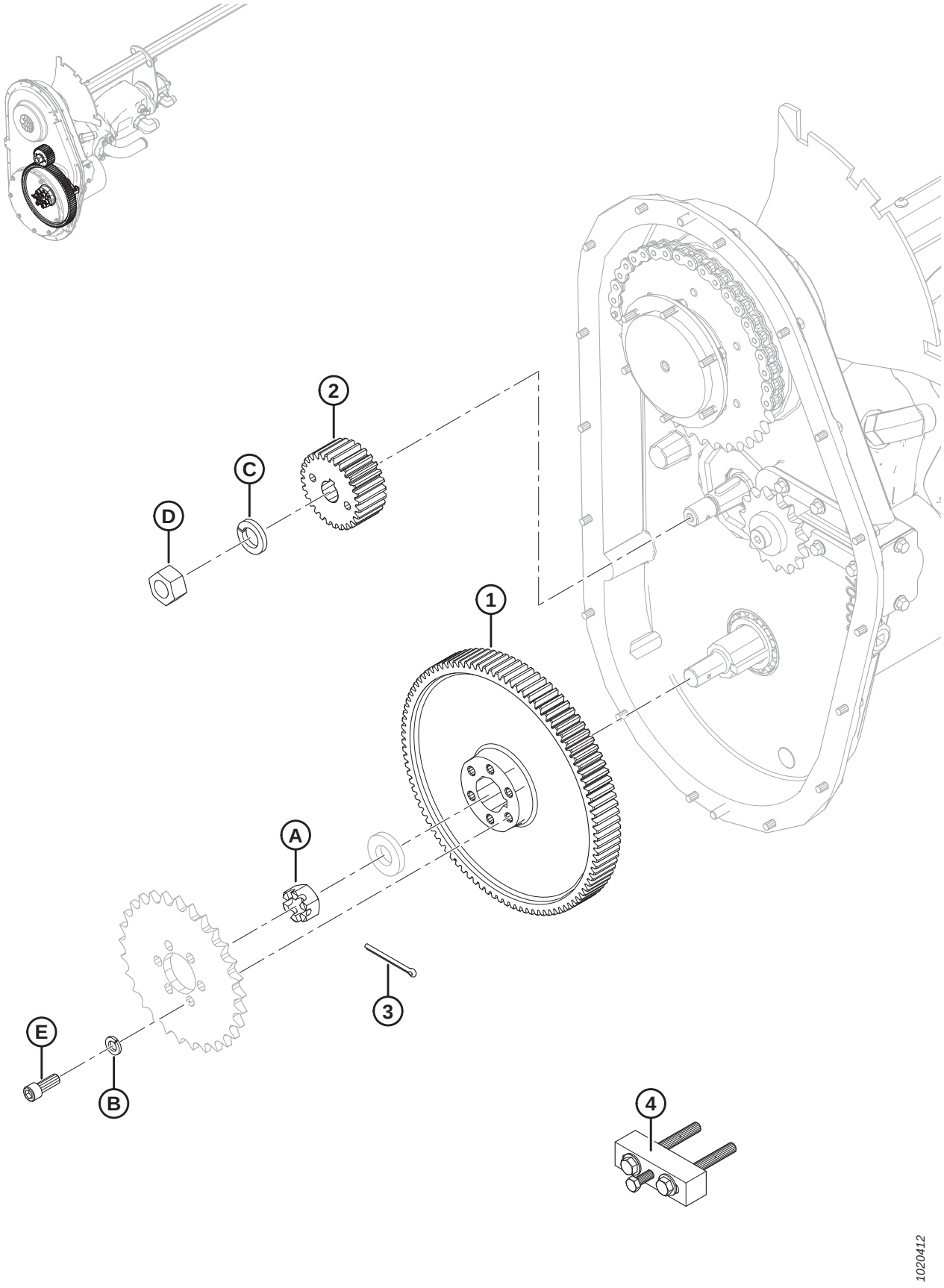

GEAR SET CONVERSION KITS

Ref	Part Number	Description	Qty	Serial Number
	B6191	KIT – GEARSET 89/36 (CLAAS/AGCO/GLEANER) [460]		
	B6192	KIT – GEARSET 97/28 (CNH/JD) [461]		
1	276353	GEAR – 89 TEETH	1	
	187480	GEAR – 97 TEETH	1	
2	276352	GEAR – PINION 36 TEETH 2.5 MODULE	1	
	276859	GEAR – PINION 28 TEETH 2.5 MODULE	1	
3	135358	PIN – COTTER, 5/32 DIA X 2.0 ZP	1	
4	304800	TOOL ASSEMBLY – GEAR PULLER [462]	1	
A	5512	NUT – HEX SLOTTED .750-16 UNF ZN PL		
B	18637	WASHER – REG. LOCK 3/8 IN. NOM. I.D. ZP		
C	18640	WASHER – REG. LOCK 3/4 IN. NOM. I.D. ZP		
D	18720	NUT – HEX 3/4-16 UNF GR 5 ZN PL		
E	135381	SCREW – HEX SOC HD		

460. Includes 89-tooth gear (MD #276353), 36–tooth pinion gear (MD #276352), cotter pin (MD #135358), gear puller tool (MD #304800), and hardware. Kits available through Whole Goods only.
461. Includes 97-tooth gear (MD #187480), 28-tooth pinion gear (MD #276859), cotter pin (MD #135358), gear puller tool (MD #304800), and hardware. Kits available through Whole Goods only.
462. Includes two washers (MD #18598), two bolts (MD #30035), bolt (MD #50072), and instructions.

146 Sprocket and Chain Conversion Kit

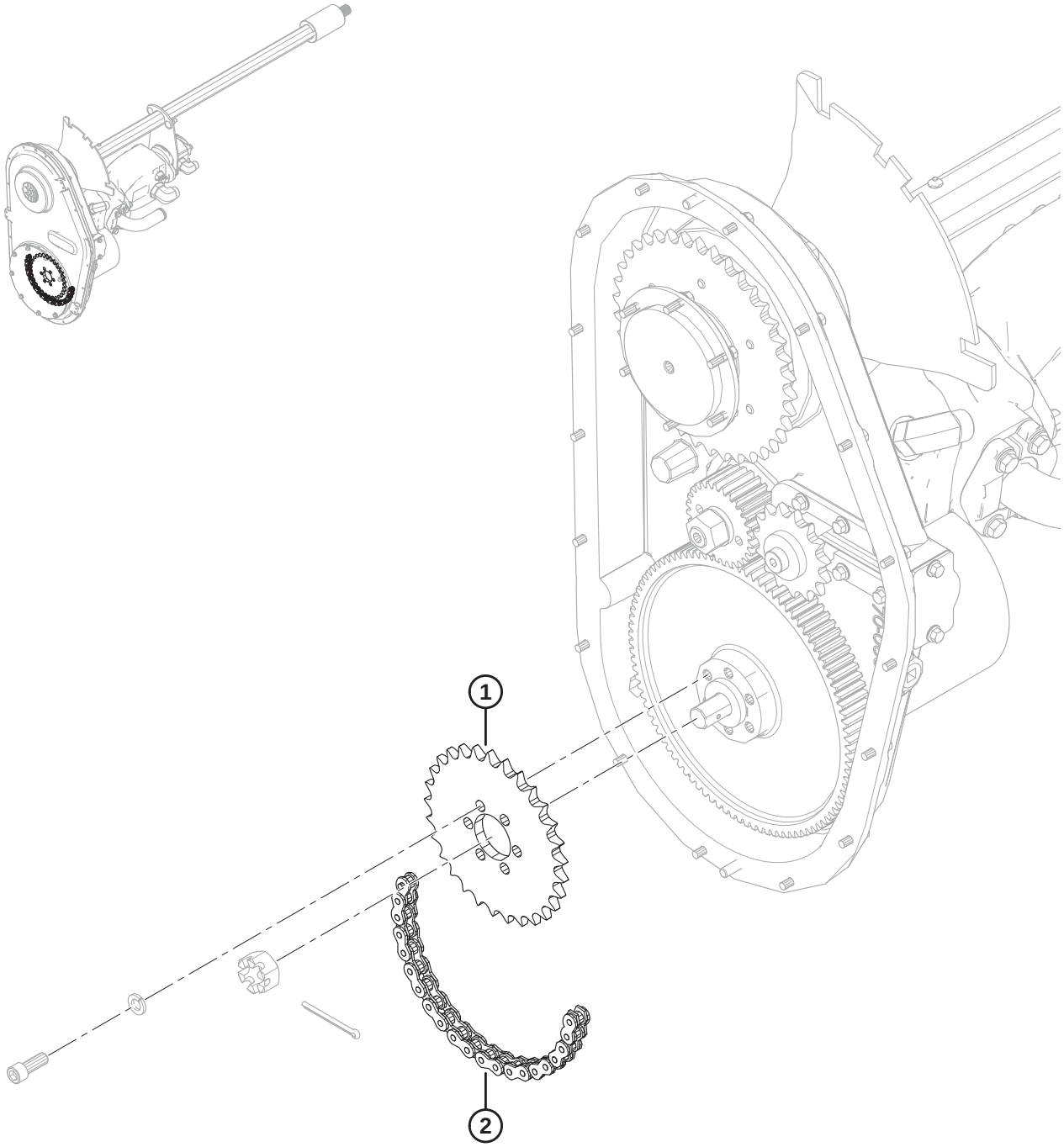

1027782

SPROCKET AND CHAIN CONVERSION KIT

Ref	Part Number	Description	Qty	Serial Number
	B6195	KIT – SPROCKET/CHAIN (CNH/AGCO/GLEANER) [463]		
1	231389	SPROCKET – 50A29	1	
2	231534	ROLLER CHAIN – RC 50 (78 PITCHES ENDLESS)	1	

463. Sprocket/Chain kit is used to convert float modules configured for John Deere/CLAAS Lexion combines to CNH/AGCO combines. Kits available through Whole Goods only.

147 AGCO Challenger/Massey Ferguson Conversion Kit

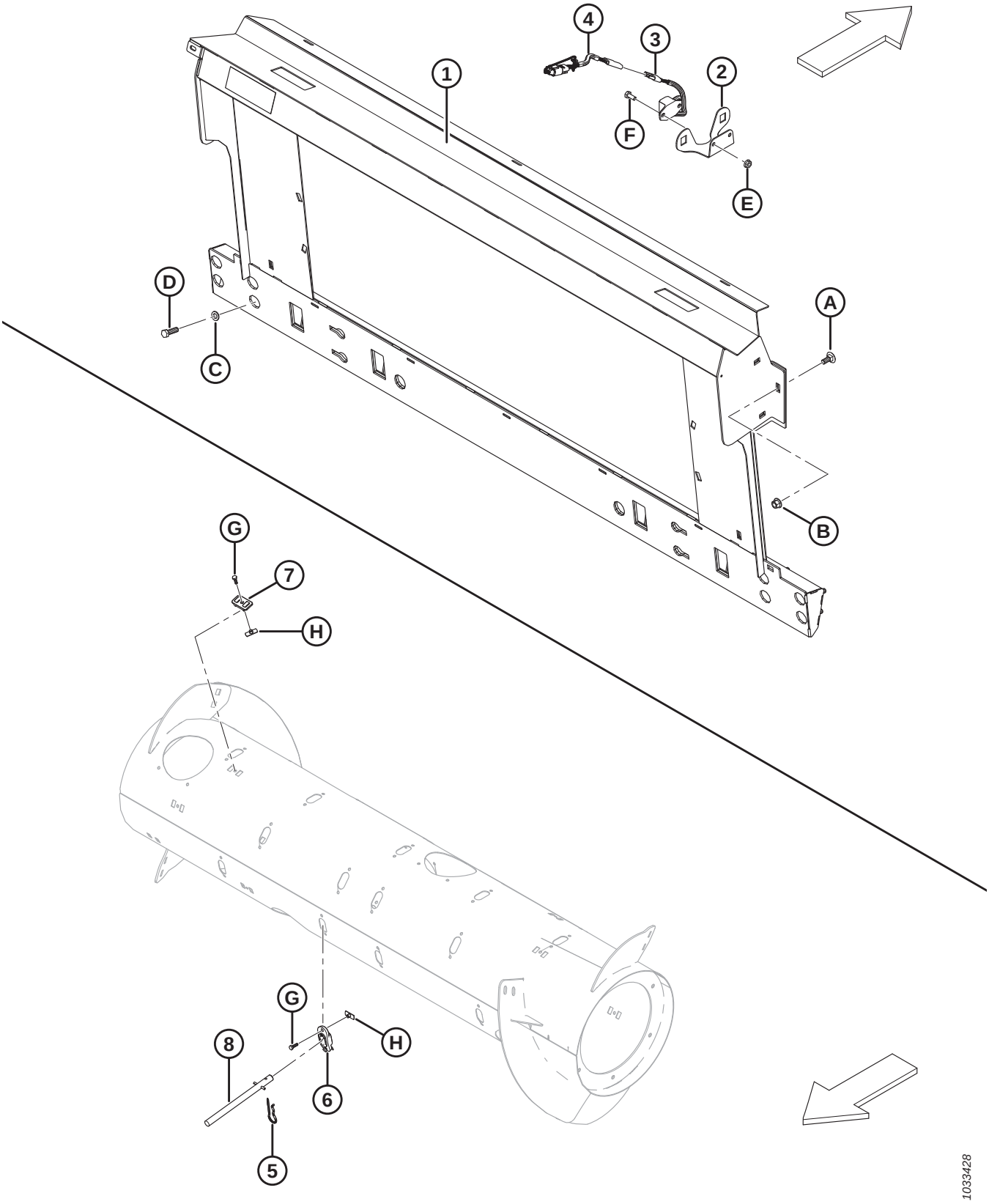

AGCO CHALLENGER/MASSEY FERGUSON CONVERSION KIT

Ref	Part Number	Description	Qty	Serial Number
	B6881	KIT – MASSEY/CHALLENGER CONVERSION [464]	1	
1	133672	FRAME – AGCO TRANSITION LATERAL TILT C/W DECAL	1	
2	279746	SUPPORT – REEL SPEED SENSOR	1	
3	152736	SENSOR – SPEED, 3-WIRE (CHALLENGER/MASSEY)	1	
4	220572	HARNESS – WIRING REEL SPEED SENSOR	1	
5	123180	PIN – HAIR	8	
6	337143	GUIDE	8	
7	213084	PLUG – FLIGHTING SLOT	8	
8	337152	KIT – FINGER [465]	8	
	7642	PIN – SPRING 3/16 DIA X 1.5 LG		
A	184667	BOLT – RHSN M12 X 1.75 X 30-8.8-A3L		
B	136431	NUT – HEX FLG CTR LOC M12 X 1.75-10-A3L		
C	184714	WASHER – FLAT REG M12-300HV-A3L		
D	152730	BOLT – HEX HD TFL M12 X 1.75 X 35-10.9-AA1J		
E	21455	NUT – FLG (SER FACE) 1/4 NC GR 5 ZP		
F	21572	BOLT – HEX HD 1/4 NC X 0.625 LG GR 5 ZP		
G	252703	BOLT – HEX HD TFL M6 X 1 X 20 X SPCL-12.9-AA2L		
H	197263	NUT – TEE M6 X 1		

464. Kits available through Whole Goods only.
465. Includes solid finger (not sold separately), spring pin (MD #7642), guide (MD #337143), and instructions.

148 AGCO Gleaner Conversion Kit

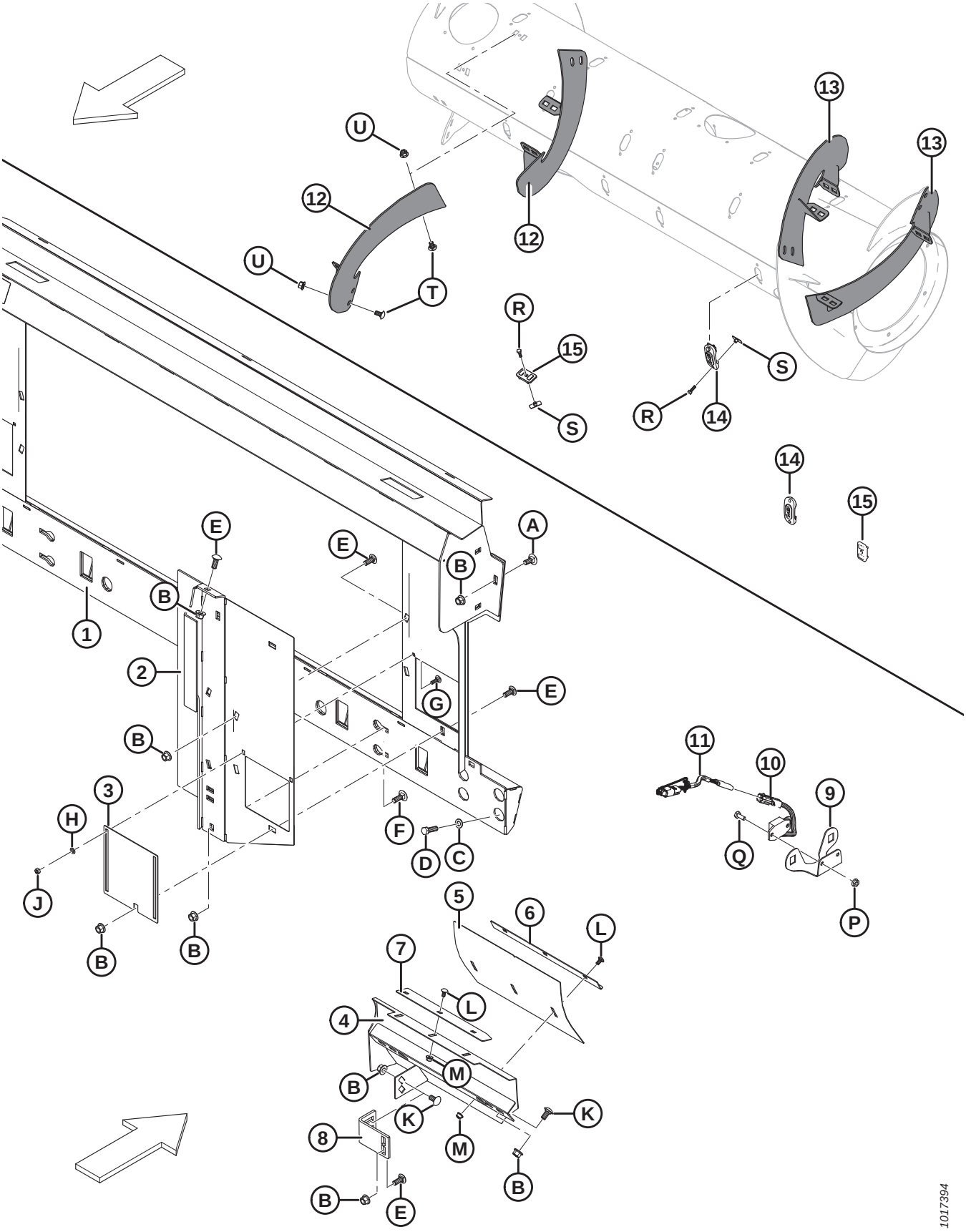

AGCO GLEANER CONVERSION KIT

Ref	Part Number	Description	Qty	Serial Number
	B6958	KIT – GLEANER TRANSITION FRAME CONVERSION [466]		
1	245852	FRAME – GLEANER R/S C/W DECAL	1	
2	245815	FILLER – LH WELDMENT	1	
	245816	FILLER – RH WELDMENT	1	
3	245763	DOOR – ACCESS	2	
4	213833	DEFLECTOR – WELDT LH GLEANER	1	
	213834	DEFLECTOR – WELDT RH GLEANER	1	
5	213843	DEFLECTOR – ADJUSTING PANEL	2	
6	213844	ANGLE – STRIPPER	2	
7	213845	STRIPPER	2	
8	276289	FILLER BRACKET	2	
9	279746	SUPPORT – REEL SPEED SENSOR	1	
10	184440	SENSOR – SPEED, 2-WIRE (GLEANER)	1	
11	220572	HARNESS – WIRING REEL SPEED SENSOR	1	
12	287890	FLIGHTING, RTD – RH, LONG (HIWEAR)	2	
13	287889	FLIGHTING, RTD – LH, LONG (HIWEAR)	2	
14	187137	PLUG	12	
15	213084	PLUG – FLIGHTING SLOT	4	
A	184667	BOLT – RHSN M12 X 1.75 X 30-8.8-A3L		
B	50186	NUT – FLG LK SM FACE DT 1/2-13 UNC-GR5-AA1J		
C	184714	WASHER – FLAT REG M12-300HV-A3L		
D	152730	BOLT – HEX HD TFL M12 X 1.75 X 35-10.9-AA1J		
E	21868	BOLT – RHSSN 1/2-13 X 1.0 GR5 AA1J		
F	21471	BOLT – RHSN 1/2-13 X 1.25 GR5 AA1J		
G	21282	BOLT – RHSN 5/16-18 X 1-GR5-AA1J		
H	184572	WASHER – USS FLAT 1/4 IN. NOM		
J	18589	NUT – HEX 5/16-18 UNC GR 5 ZP		
K	152439	BOLT – RHSSN M12 X 1.75 X 25-8.8-A3L		
L	191489	BOLT – RHSSN TFL M8 X 1.25 X 16-8.8-A2L		
M	135337	NUT – HEX FLG CTR LOC M8 X 1.25-8-A2L		
P	21455	NUT – FLG (SER FACE) 1/4 NC GR 5 ZP		
Q	21572	BOLT – HEX HD 1/4 NC X 0.625 LG GR 5 ZP		
R	252703	BOLT – HEX HD TFL M6 X 1 X 20 X SPCL-12.9-AA2L		
S	197263	NUT – TEE M6 X 1		
T	184657	BOLT – RHSSN M10 X 1.5 X 20-8.8-A3L		
U	135799	NUT – HEX FLG CTR LOC M10 X 1.5-10-A3L		

466. Kits available through Whole Goods only.

149 AGCO IDEAL™ Conversion Kit

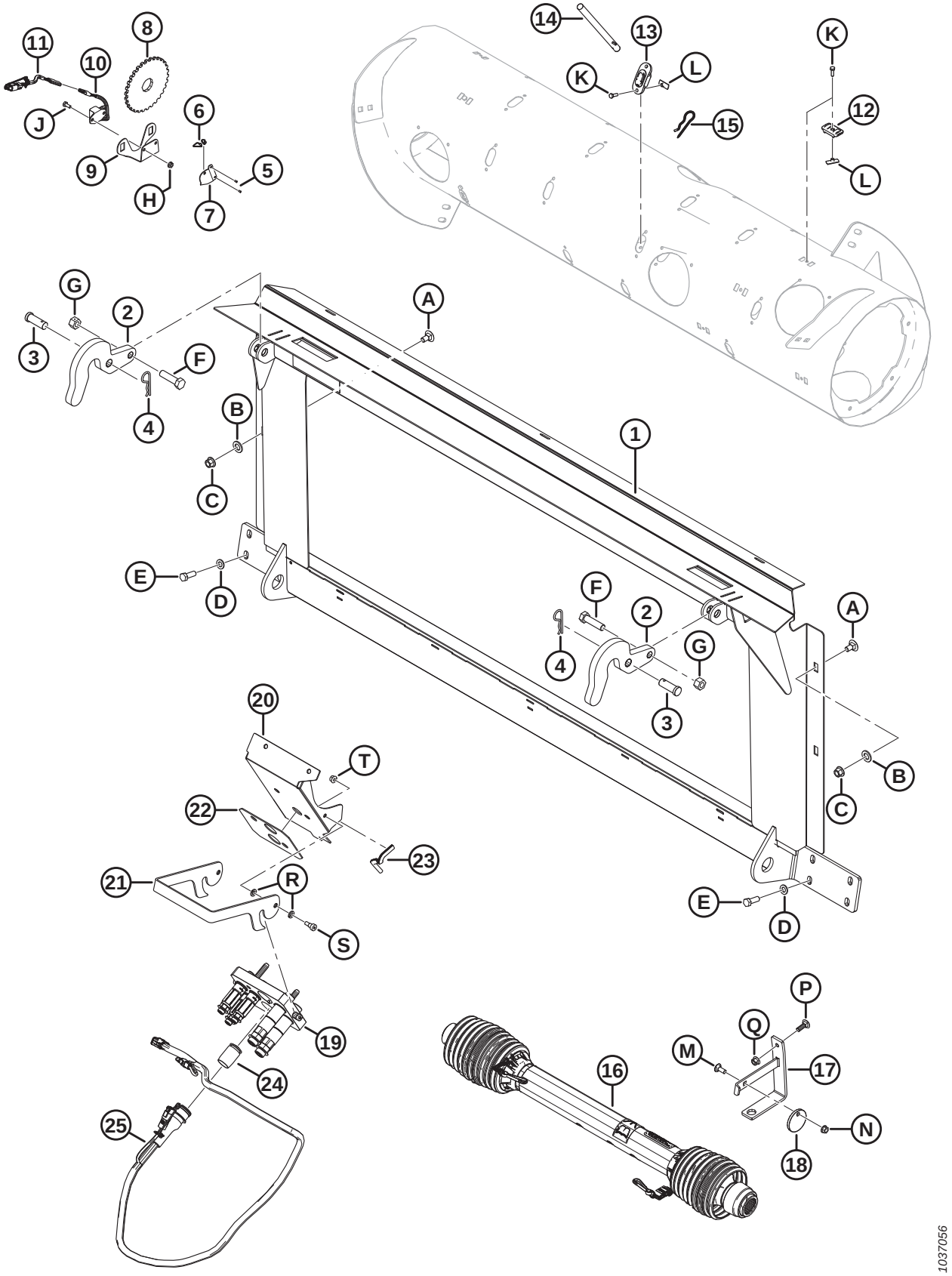

AGCO IDEAL™ CONVERSION KIT

Ref	Part Number	Description	Qty	Serial Number
	B6882	KIT – AGCO IDEAL 7/8/9 CONVERSION [467]		
1	314678	FRAME – IDEAL TRANSITION W/ DECAL	1	
2	301451	SUPPORT – HOOK	2	
3	158080	PIN – CLEVIS	2	
4	13125	PIN – HAIR	2	
5	14338	RIVET – BLIND 1/8 X .125	2	
6	16661	FASTENER – CABLE TIE, BLACK	2	
7	164131	SHIELD – REEL SPEED SENSOR HARNESS	1	
8	133997	DISC – REEL SPEED SENSOR	1	
9	279746	SUPPORT – REEL SPEED SENSOR	1	
10	152736	SENSOR – SPEED, AGCO (3-WIRE)	1	
11	220572	HARNESS – WIRING AGCO REEL SPEED SENSOR	1	
12	213084	PLUG – FLIGHTING SLOT	8	
13	337143	GUIDE	8	
14	337152	KIT – FINGER [468]	8	
	7642	PIN – SPRING 3/16 DIA X 1.5 LG		
15	123180	PIN – HAIR	8	
16	314306	DRIVELINE – 1 3/4-20 SPL IDEAL [469]	1	
17	133166	BRACKET – DRIVELINE HANGER-WELDT	1	
18	133165	DISC – LOCK, DRIVELINE	1	
19	335008	COUPLING – MULTI, AGCO 5-POS	1	
	294394	KIT – COUPLER PLATE ASSY, AGCO		
	279011	KIT – COUPLER, 3/8 C/W 3/8 IN. FITTING		
	279012	KIT – COUPLER, 9/16 C/W 5/8 IN. FITTING		
	279034	SEAL – 3/8 COUPLER		
	279035	SEAL – 9/16 COUPLER		
	184461	FITTING – ADAPTER HYD	2	
	44210	O-RING – #10 ORB		
	135867	O-RING – #10 ORFS		
20	335059	BRACKET – AGCO IDEAL COUPLER	1	
21	**337980**	**LATCH – MULTICOUPLER**	**1**	
22	302030	PAD – RUBBER	1	
23	42074	MOULDING	1	
24	129148	PLUG – RUBBER	1	
25	**311707**	**HARNESS – FM100 COMPLETION, IDEAL**	**1**	
A	135903	BOLT – RHSN M12 X 1.75 X 25-8.8-AA1J		
B	184717	WASHER – FLAT REG M16-200HV-AA1J		
C	136431	NUT – HEX FLG CTR LOC M12 X 1.75-10		
D	184714	WASHER – FLAT REG M12-300HV		

467. Kits available through Whole Goods only.
468. Includes solid finger (not sold separately), spring pin (MD #7642), guide (MD #337143), and instructions.
469. For service parts, refer to Section *103 Input Driveline and Support, page 301*.

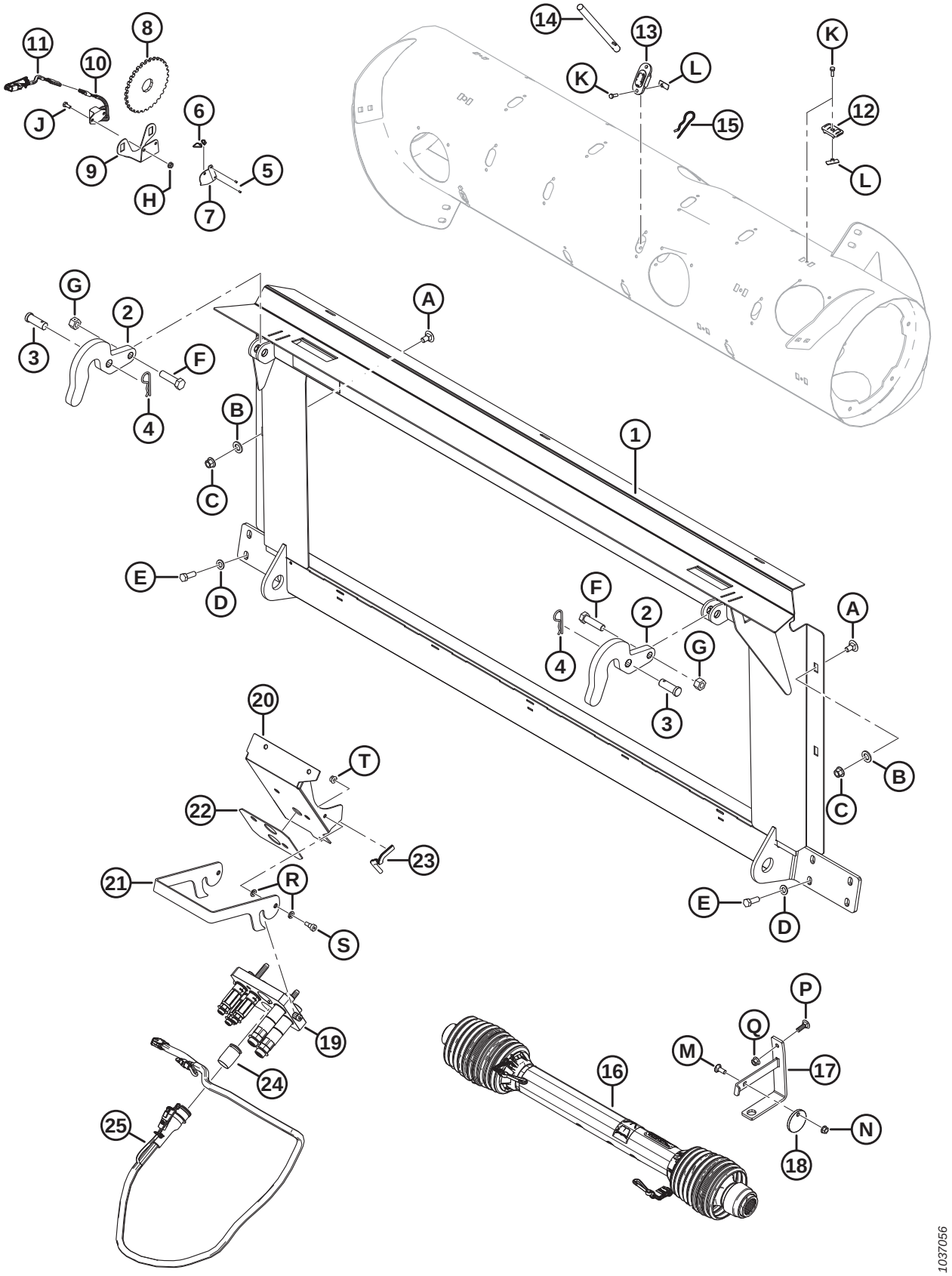
11
10
8
J
6
9
H
7
5
14
13
K
L
K
15
12
L
G
2
3
F
4
A
B
C
1
E
D
F
2
4
G
3
A
20
T
22
23
21
R
S
B
C
E
D
P
Q
M
17
19
24
16
25
N
18
1037056

AGCO IDEAL™ CONVERSION KIT

Ref	Part Number	Description	Qty	Serial Number
E	152730	BOLT – HEX HD TFL M12 X 1.75 X 35-10.9-AA1J		
F	136141	BOLT – HEX HD M16 X 2 X 60-8.8-AA1J		
G	136476	NUT – HEX CTR LOC M16 X 2-8		
H	21455	NUT – FLG (SER FACE) 1/4 NC-GR5-AA1J		
J	21572	BOLT – HEX HD 1/4-20 X 0.625 GR5-AA1J		
K	252703	BOLT – HEX HD TFL M6 X 1 X 20 X SPCL-12.9-AA2L		
L	197263	NUT – TEE M6 X 1		
M	19965	BOLT – RHSN 3/8-16 X 1-GR5-AA1J		
N	30228	NUT – FLG DT SM FACE 3/8-16 UNC-GR5-AA1J		
P	184662	BOLT – RHSN TFL M10 X 1.5 X 30-8.8-AA1J		
Q	135799	NUT – HEX FLG CTR LOC M10 X 1.5-10		
R	30632	WASHER – LOCK SPRING M10		
S	135894	SCREW – HEX SOC HD SHLDR M10		
T	135337	NUT – HEX FLG CTR LK M8 X 1.25-8-AA1J		

150 John Deere Conversion Kits

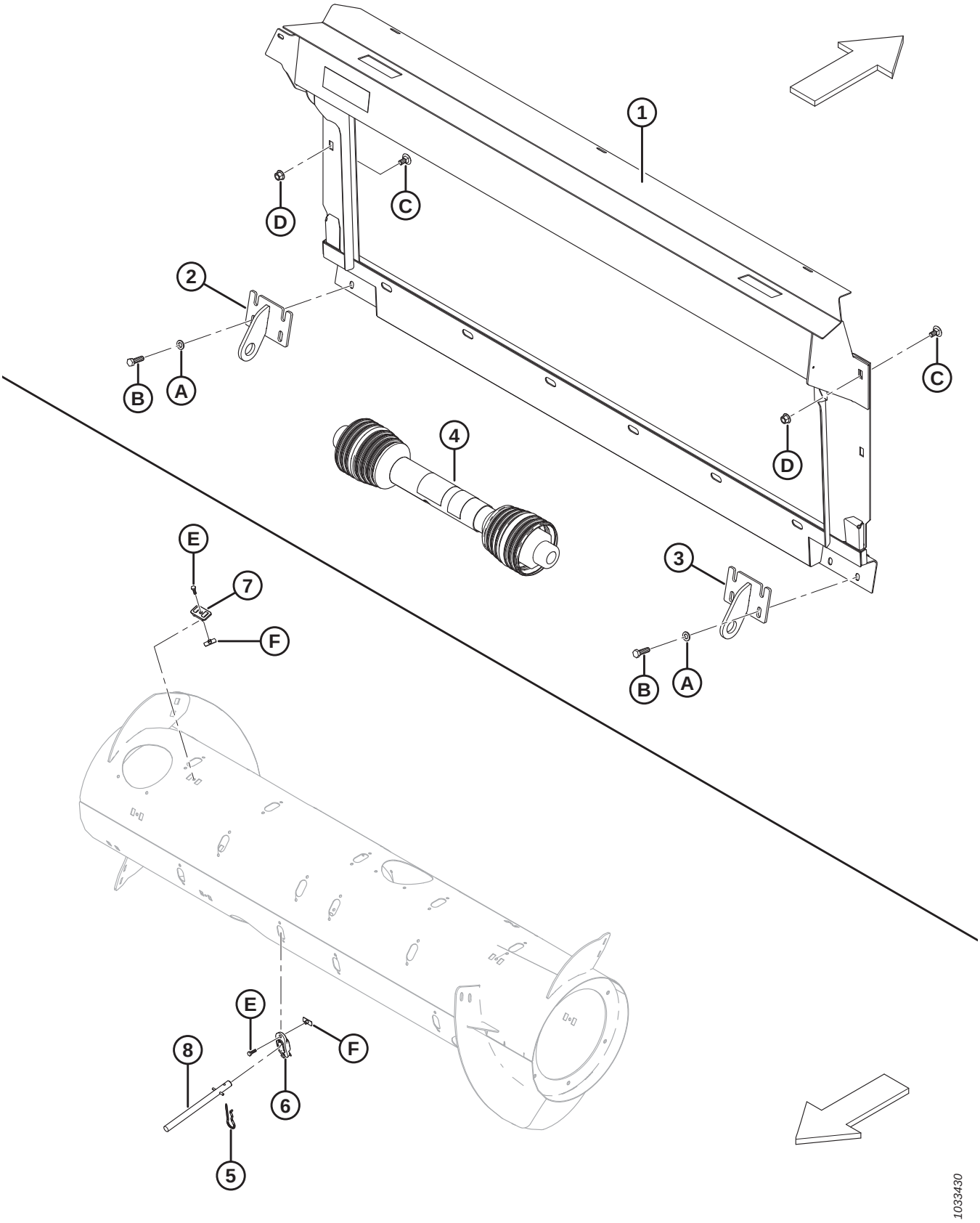

Ref	Part Number	Description	Qty	Serial Number
	B6887	KIT – JD LEVEL LAND CONVERSION [470]		
1	294514	FRAME – JD WELDT LEVEL LAND	1	
2	151941	BRACKET – LEFT WELDT	1	
3	151942	BRACKET – RIGHT WELDT	1	
4	187550	21T DRIVELINE – JD WIDEBODY WALKER MACHINES-9650/9660, 9660 WTS, AND T9670 [471]	1	
5	123180	PIN – HAIR	8	
6	337143	GUIDE	8	
7	213084	PLUG – FLIGHTING SLOT	8	
8	337152	KIT – FINGER [472]	8	
	7642	PIN – SPRING 3/16 DIA X 1.5 LG		
	B6957	KIT – JD CONTOUR MASTER CONVERSION [470]		
1	**347301**	**ASSEMBLY – JD CM TRANS FRAME W/DECAL**	**1**	
2	245760	BRACKET – LEFT WELDT	1	
3	245761	BRACKET – RIGHT WELDT	1	
4	187553	21T DRIVELINE – JD STS/S SERIES (EXCEPT MODELS LISTED AT MD #187550), CLAAS, AND AGCO [471]	1	
A	184714	WASHER – FLAT REG M12-300HV-A3L		
B	184669	BOLT – HEX HD M12 X 1.75 X 40-8.8-A3L		
C	136625	BOLT – HEX SER FLG HD M12 X 1.75 X 25 X SPCL-100-AA1J		
D	136431	NUT – HEX FLG CTR LOC M12 X 1.75-10-A3L		
E	252703	BOLT – HEX HD TFL M6 X 1 X 20 X SPCL-12.9-AA2L [473]		
F	197263	NUT – TEE M6 X 1 [473]		

470. Kits available through Whole Goods only.
471. For service parts, refer to Section *103 Input Driveline and Support, page 301*.
472. Includes solid finger (not sold separately), spring pin (MD #7642), guide (MD #337143), and instructions.
473. Used in conversion kit MD #B6887 only.

151 Rostselmash Conversion Kit

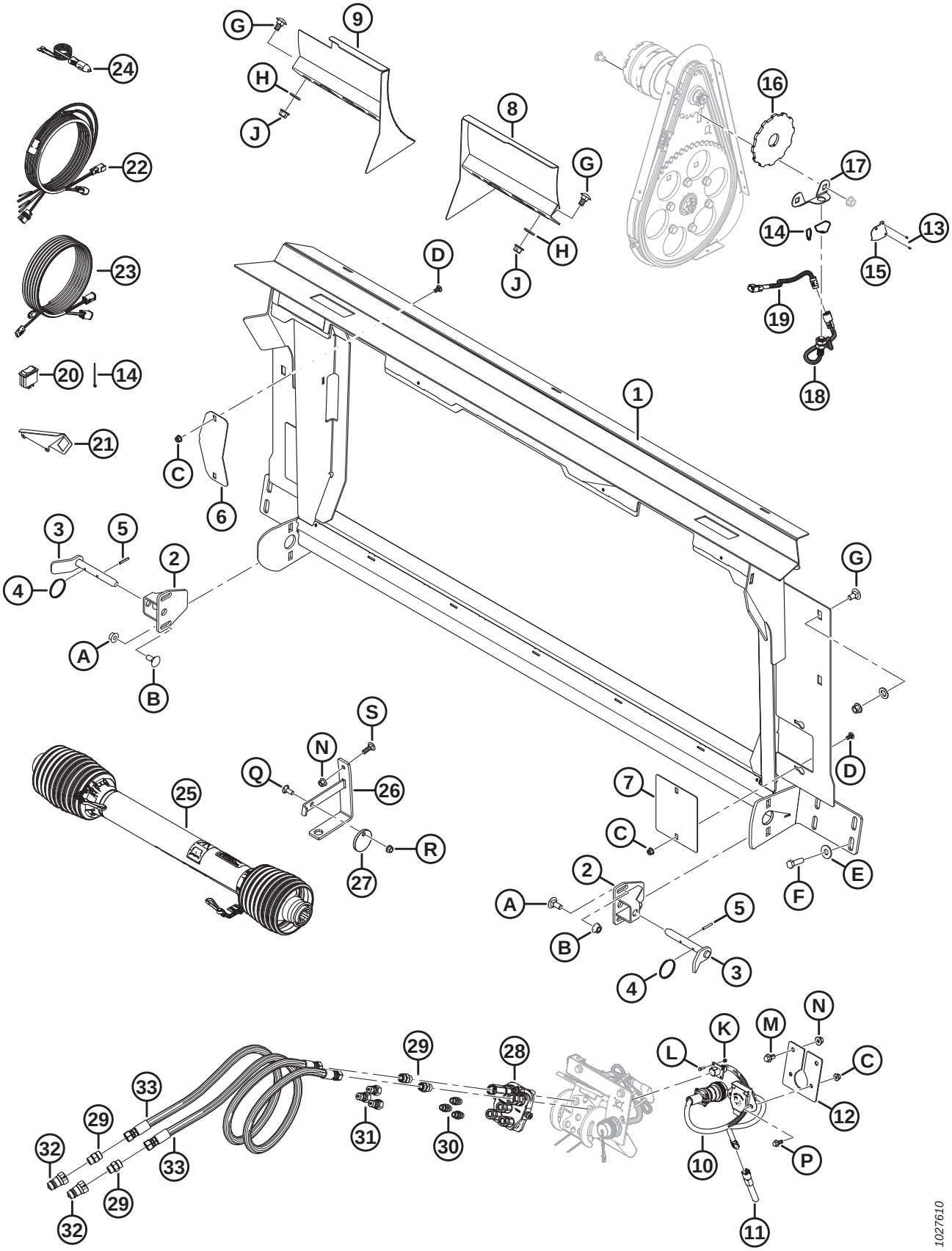

ROSTSELMASH CONVERSION KIT

Ref	Part Number	Description	Qty	Serial Number
	B6568	KIT – CASE TO ROSTSELMASH 760/780 CONV PKG [474]		
1	314684	FRAME – TRANSITION W/ DECAL	1	
2	301185	SUPPORT – LOCK WELDT	2	
3	301202	HANDLE – LOWER LOCK WELDT	2	
4	118137	RING	2	
5	13617	PIN – SPRING 3/16 DIA X 1.25 LG	2	
6	322113	PLATE – DRIVE COVER	1	
7	314627	PLATE – FILLER COVER	2	
8	301200	DEFLECTOR – RH WELDT	1	
9	301193	DEFLECTOR – LH WELDT	1	
10	300978	HARNESS – ADAPTER, CNH TO RSM	1	
11	300536	VOLTAGE REGULATOR – (+) 5 VDC	1	
12	314307	SUPPORT – CONNECTOR	1	
13	14338	RIVET – BLIND 1/8 X .125	2	
14	16661	FASTENER – CABLE TIE, BLACK	14	
15	164131	SHIELD – REEL SPEED SENSOR HARNESS	1	
16	304533	DISC – REEL SPEED SENSOR	1	
17	133781	SUPPORT – REEL SPEED SENSOR	1	
18	136167	SENSOR – SPEED	1	
19	**304982**	**HARNESS – WIRING REEL SPEED SENSOR (CLAAS/LEXION)**	**1**	
20	109064	SWITCH – ROCKER (HDR LIFT RELAY BYPASS)	1	
21	158377	SUPPORT – ROCKER SWITCH	1	
22	304210	HARNESS – CAB DRAPER CONTROL	1	
23	304211	HARNESS – CAB DRAPER EXTENSION	1	
24	220570	HARNESS – AUX PWR TO QUICK DISC	1	
25	301704	DRIVELINE – 38-8 SPLINE [475]	1	
26	133166	BRACKET – DRIVELINE HANGER-WELDT	1	
27	133165	DISC – LOCK, DRIVELINE	1	

474. Kit is used to convert from a Case configuration to a Rostselmash 760/780 configuration. Kit also requires a Dealer/ Customer sourced Rostselmash reel speed sensor. Includes all listed parts and instructions. Kits available through Whole Goods only.
475. For service parts, refer to Section *103 Input Driveline and Support, page 301*.

ROSTSELMASH CONVERSION KIT

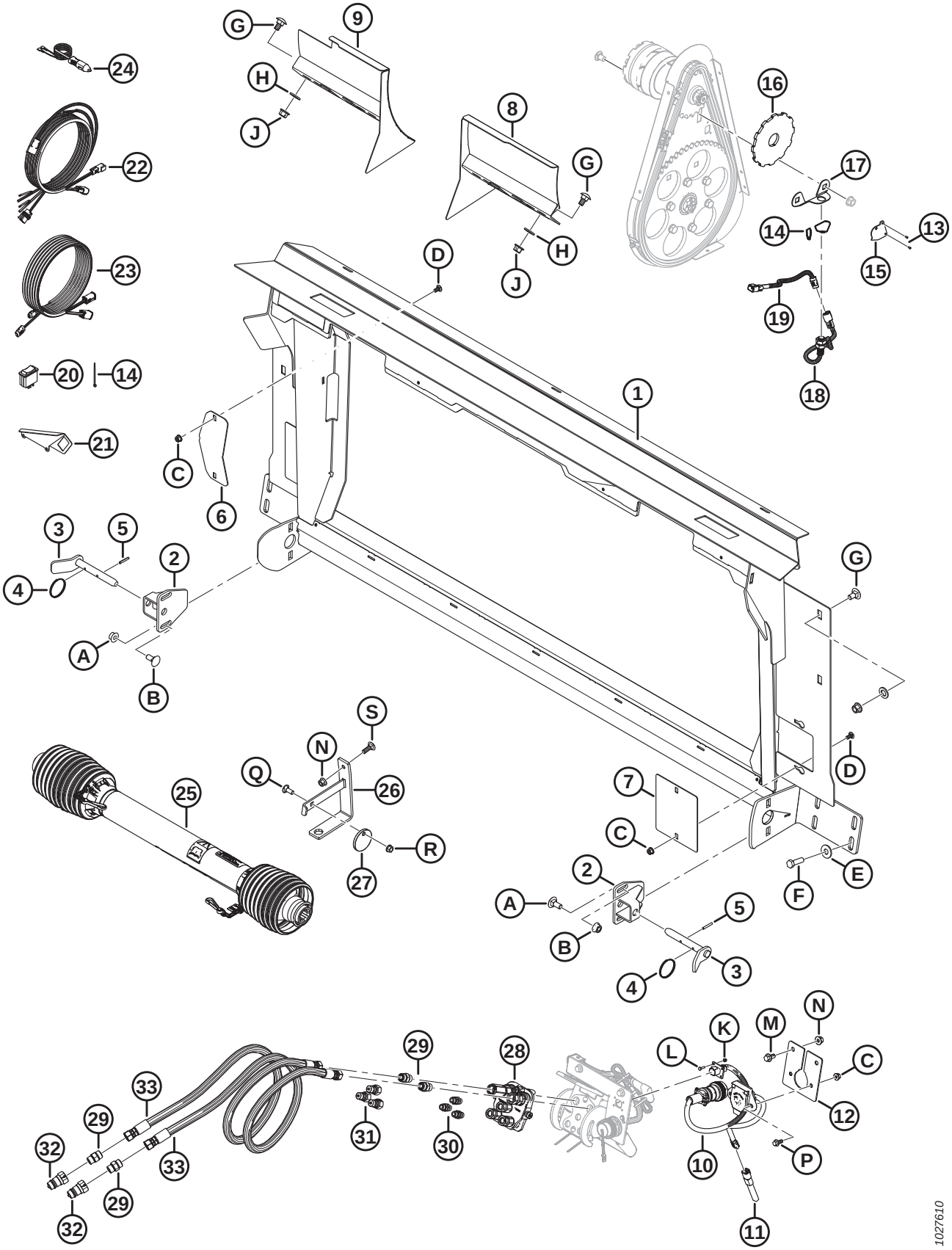

ROSTSELMASH CONVERSION KIT

Ref	Part Number	Description	Qty	Serial Number
28	135238	COUPLING – MULTI LINK	1	
	111981	SEAL KIT – 1/4 IN. COUPLER		
	111982	SEAL KIT – 3/8 IN. COUPLER		
	111983	KIT – SCREW		
	111984	KIT – DOWEL		
	111985	COUPLER – 3/8 IN. (LONG)		
	111986	COUPLER – 1/4 IN.		
	294350	COUPLER – SHORT, 3/8 IN. (SHORT)		
29	135780	FITTING – ADAPTER	4	
	44209	O-RING – #8 ORB		
	135866	O-RING – #8 ORFS		
30	301763	FITTING – ADAPTER -6 ORB	3	
	50219	O-RING – #6 ORB		
31	301764	FITTING – COUPLING HYD	3	
32	301765	FITTING – COUPLING HYD	2	
33	301766	HOSE – HYDRUALIC	2	
A	184667	BOLT – RHSN M12 X 1.75 X 30-8.8-AA1J		
B	184697	NUT – HEX SER FLG M12 X 1.75-8-AA1J		
C	135337	NUT – HEX FLG CTR LK M8 X 1.25-8-AA1J		
D	191489	BOLT – RHSSN TFL M8 X 1.25 X 16-8.8-AA1J		
E	184589	WASHER – FLAT 9/16 X 1.375 AA1J		
F	184669	BOLT – HEX HD M12 X 1.75 X 40-8.8-AA1J		
G	135903	BOLT – RHSN M12 X 1.75 X 25-8.8-AA1J		
H	184717	WASHER – FLAT REG M16-200HV-AA1J		
J	136431	NUT – HEX FLG CTR LOC M12 X 1.75-10		
K	197320	NUT – HEX NYLOC M4 X 0.7-8-AA1J		
L	197319	BOLT – HEX HD TFL M4 X 0.7 X 16-8.8-AA1J		
M	152655	BOLT – HEX FLG HD M10 X 1.5 X 20-8.8-AA1J		
N	135799	NUT – HEX FLG CTR LOC M10 X 1.5-10		
P	136300	BOLT – HEX FLG HD TFL M8 X 1.25 X 20-8.8-AA3L		
Q	19965	BOLT – RHSN 3/8-16 X 1-GR5-AA1J		
R	30228	NUT – FLG DT 3/8 NC-GR5-AA1J		
S	184662	BOLT – RHSN TFL M10 X 1.5 X 30-8.8-AA1J		

152 Auger Dent Repair Kit

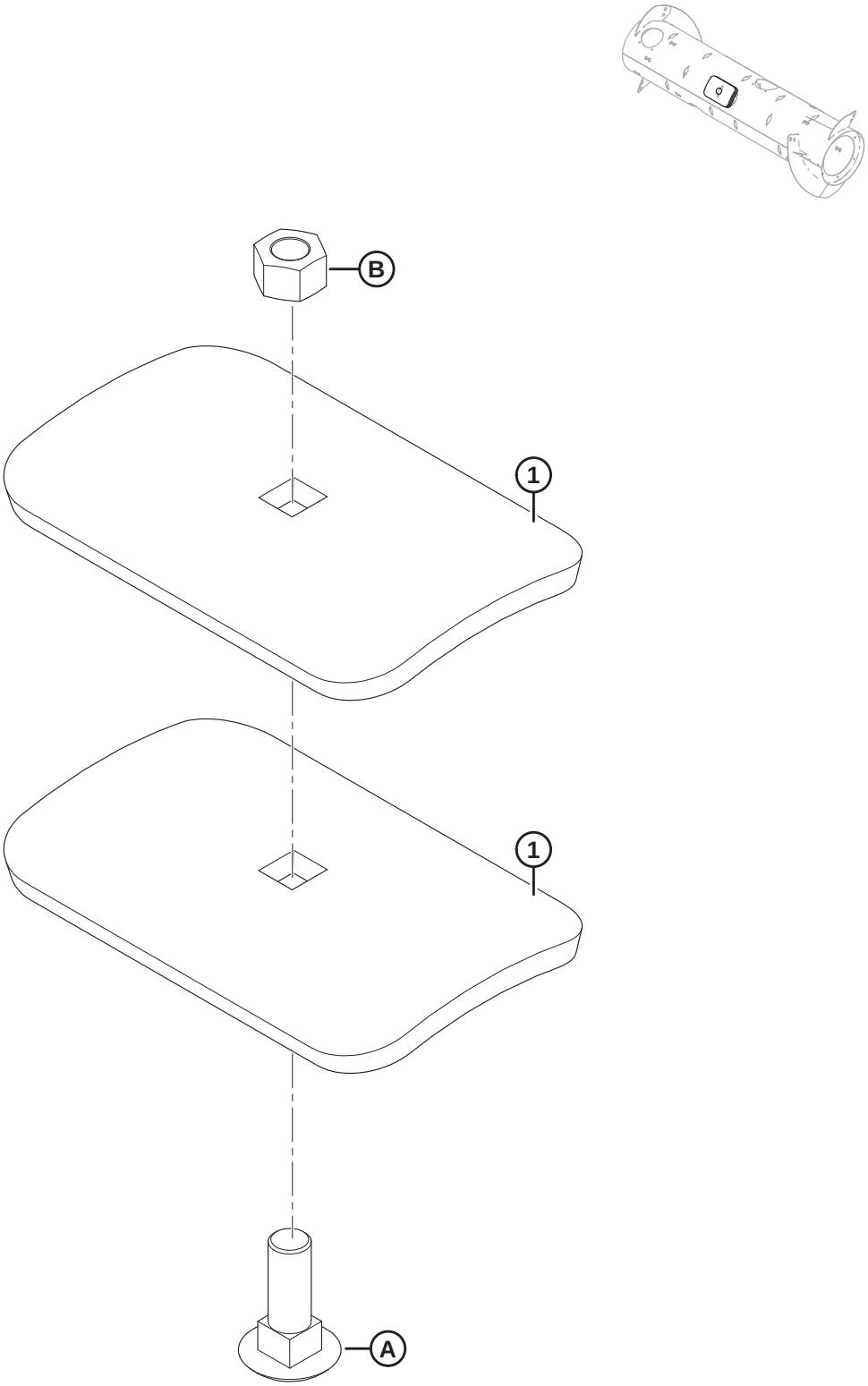

AUGER DENT REPAIR KIT

Ref	Part Number	Description	Qty	Serial Number
	237563	KIT – AUGER DENT REPAIR [476]		
1	237556	SUPPORT	2	
A	197154	BOLT – RHSN M16 X 2 X 50-10.9-A3L		
B	184699	NUT – HEX M16 X 2-8-A3L		

476. Includes two supports (MD #237556), bolt (MD #197154), nut (MD #184699), and instructions.

153 Auger Patch Kit

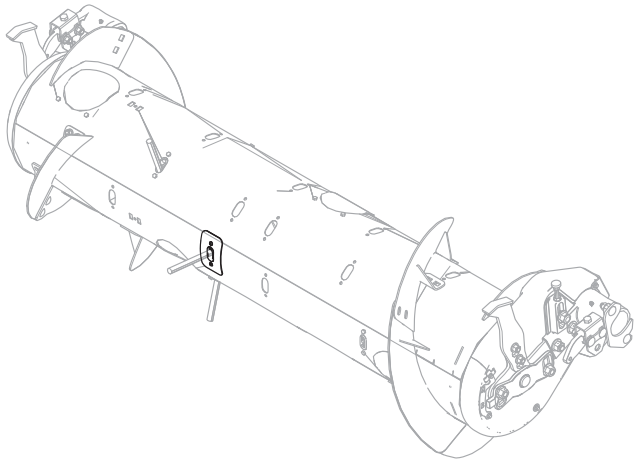

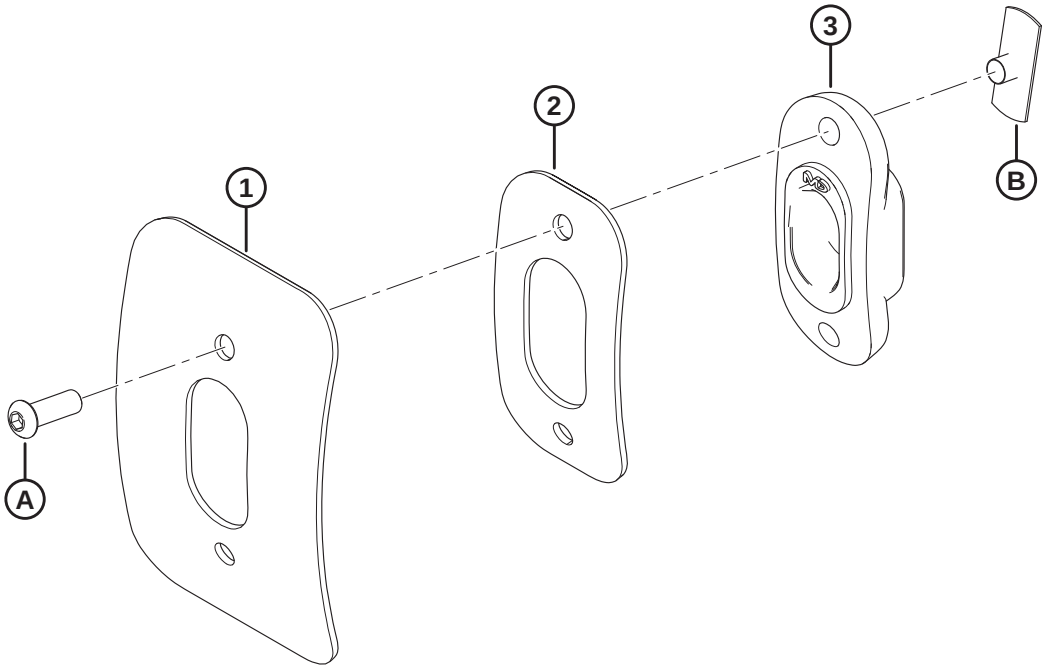

1033677

AUGER PATCH KIT

Ref	Part Number	Description	Qty	Serial Number
	335464	**KIT – RTD REPAIR** [477]		
1	NSS	BAND	1	
2	NSS	BAND – RTD REPAIR	1	
3	**337143**	**GUIDE**	**1**	
A	123084	SCREW – HEX SOCKET BUTTON HEAD		
B	123202	NUT – TEE		

477. Kit is used to repair auger damage around an auger finger. Kit includes repair bands (not sold separately), one guide (MD #337143), two screws (MD #123084), two tee nuts (MD #123202), and instructions.

154 Reel Height Sensor

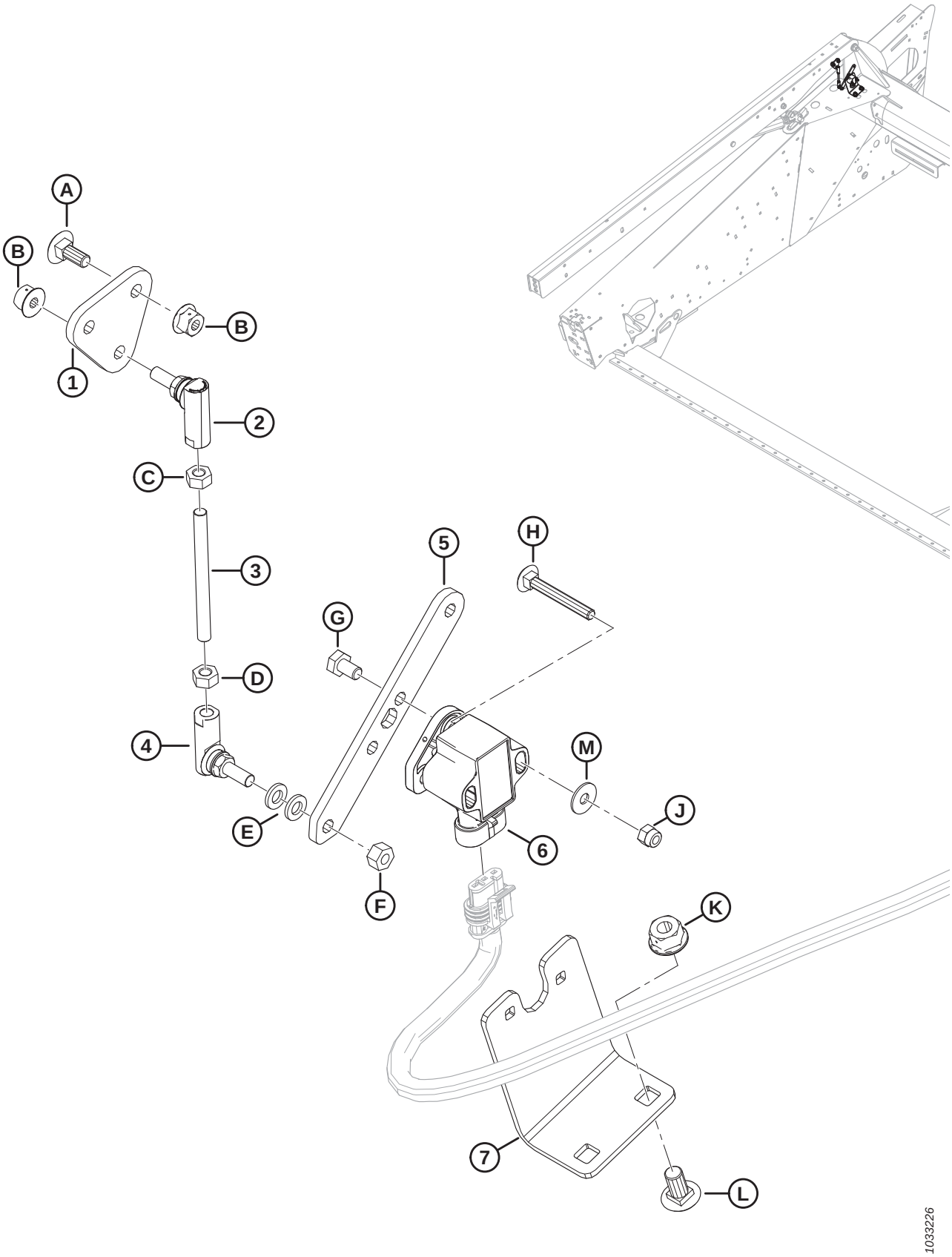

REEL HEIGHT SENSOR

Ref	Part Number	Description	Qty	Serial Number
1	254096	PLATE – BALL JOINT MOUNTING	1	
2	291485	BALL JOINT – LH THREAD	1	
3	232650	ROD – THREADED	1	
4	291484	BALL JOINT – RH THREAD	1	
5	254095	ARM – FLOAT SENSOR	1	
6	248643	ROTARY SENSOR – DUAL OUTPUT	1	
7	254089	BRACKET – SENSOR MOUNTING	1	
A	136748	BOLT – RHSN M6 X 1 X 16-8.8-A2L		
B	152668	NUT – HEX FLG CTR LOC M6 X 1-8-A2L		
C	136613	NUT – HEX LH ISO 4032 M6 X 1-8-AA2L		
D	184683	NUT – HEX ISO 4032 M6 X 1-8-A2L		
E	184705	WASHER – FLAT M6-200HV-A2L		
F	136773	NUT – HEX CTR LOC M6 X 1-8-AA3L		
G	136561	BOLT – HEX HD TFL M6 X 1 X 10-8.8-A3L		
H	136604	BOLT – RHSN TFL M5 X 0.8 X 40-8.8-AA2L		
J	197230	NUT – HEX NYLOC M5 X 0.8-8-A2L		
K	135337	NUT – HEX FLG CTR LOC M8 X 1.25-8-A2L		
L	191489	BOLT – RHSSN TFL M8 X 1.25 X 16-8.8-A2L		
M	184701	WASHER – FLAT LARGE M5-200HV		

155 Reel Speed Sensors

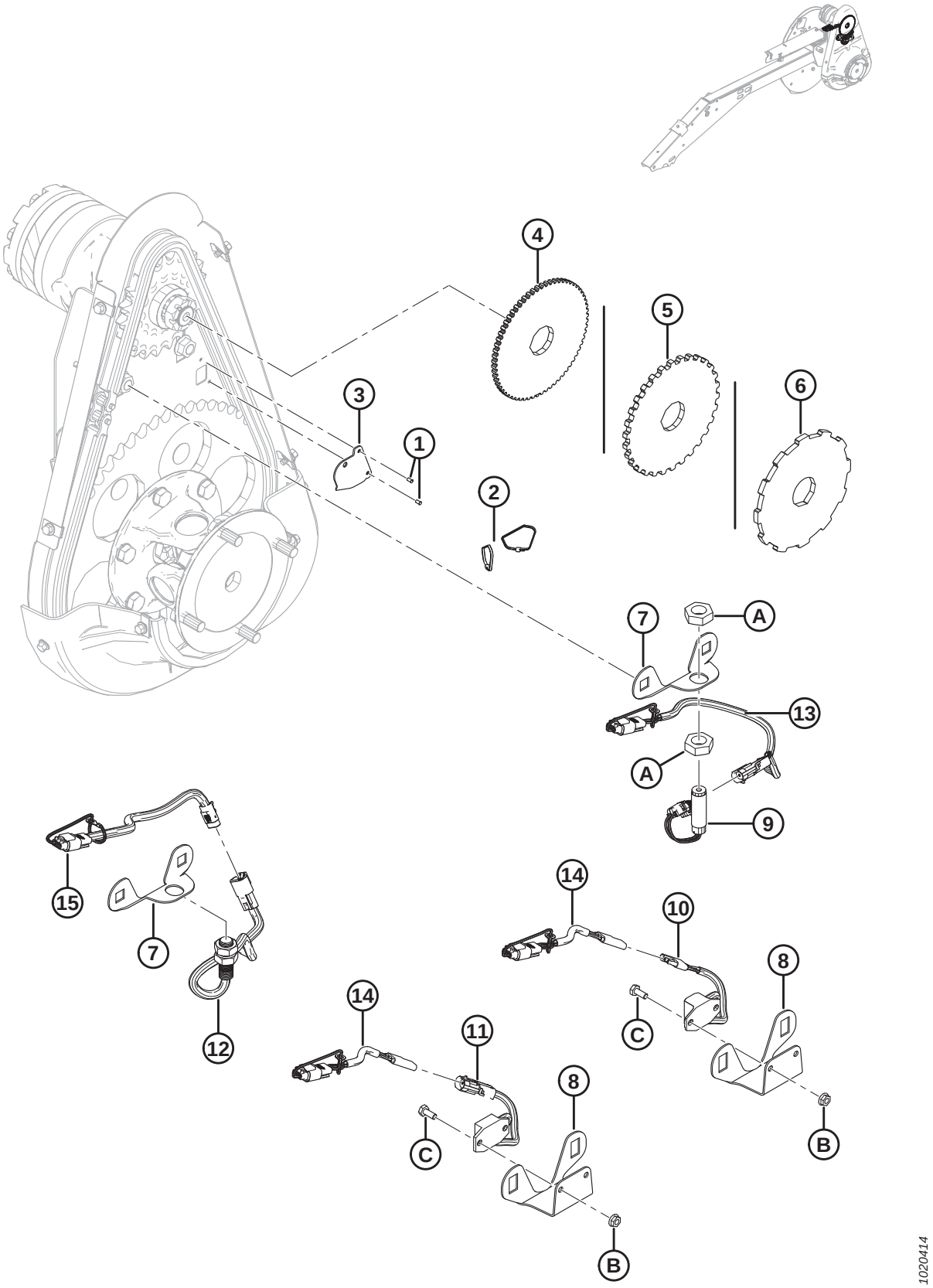

REEL SPEED SENSORS

Ref	Part Number	Description	Qty	Serial Number
1	14338	RIVET – BLIND 1/8 X .125	2	
2	16661	FASTENER – CABLE TIE (BLACK)	2	
3	164131	SHIELD – REEL SPEED SENSOR HARNESS	1	
4	133716	DISC – REEL SPEED SENSOR (JD)	1	
5	133997	DISC – REEL SPEED SENSOR (AGCO/GLEANER)	1	
6	304533	DISC – REEL SPEED SENSOR (CLAAS)	1	
7	133781	SUPPORT – REEL SPEED SENSOR (JD/CLAAS)	1	
8	279746	SUPPORT – REEL SPEED SENSOR (AGCO/GLEANER)	1	
9	184437	SENSOR – SPEED (JD)	1	
10	152736	SENSOR – SPEED, 3-WIRE (CHALLENGER/MASSEY)	1	
11	184440	SENSOR – SPEED, 2-WIRE (GLEANER)	1	
12	136167	SENSOR – SPEED (CLAAS)	1	
13	220571	HARNESS – WIRING REEL SPEED SENSOR (JD)	1	
14	220572	HARNESS – WIRING REEL SPEED SENSOR (CHALLENGER/MASSEY/GLEANER)	1	
15	**304982**	**HARNESS – WIRING REEL SPEED SENSOR (CLAAS/LEXION)**	**1**	
A	7674	NUT – HEX JAM 3/4-16 UNF GR 5 ZP		
B	21455	NUT – FLG (SER FACE) 1/4 NC GR 5 ZP		
C	21572	BOLT – HEX HD 1/4 NC X 0.625 LG GR 5 ZP		

156 (Option) Auger Flighting Kits

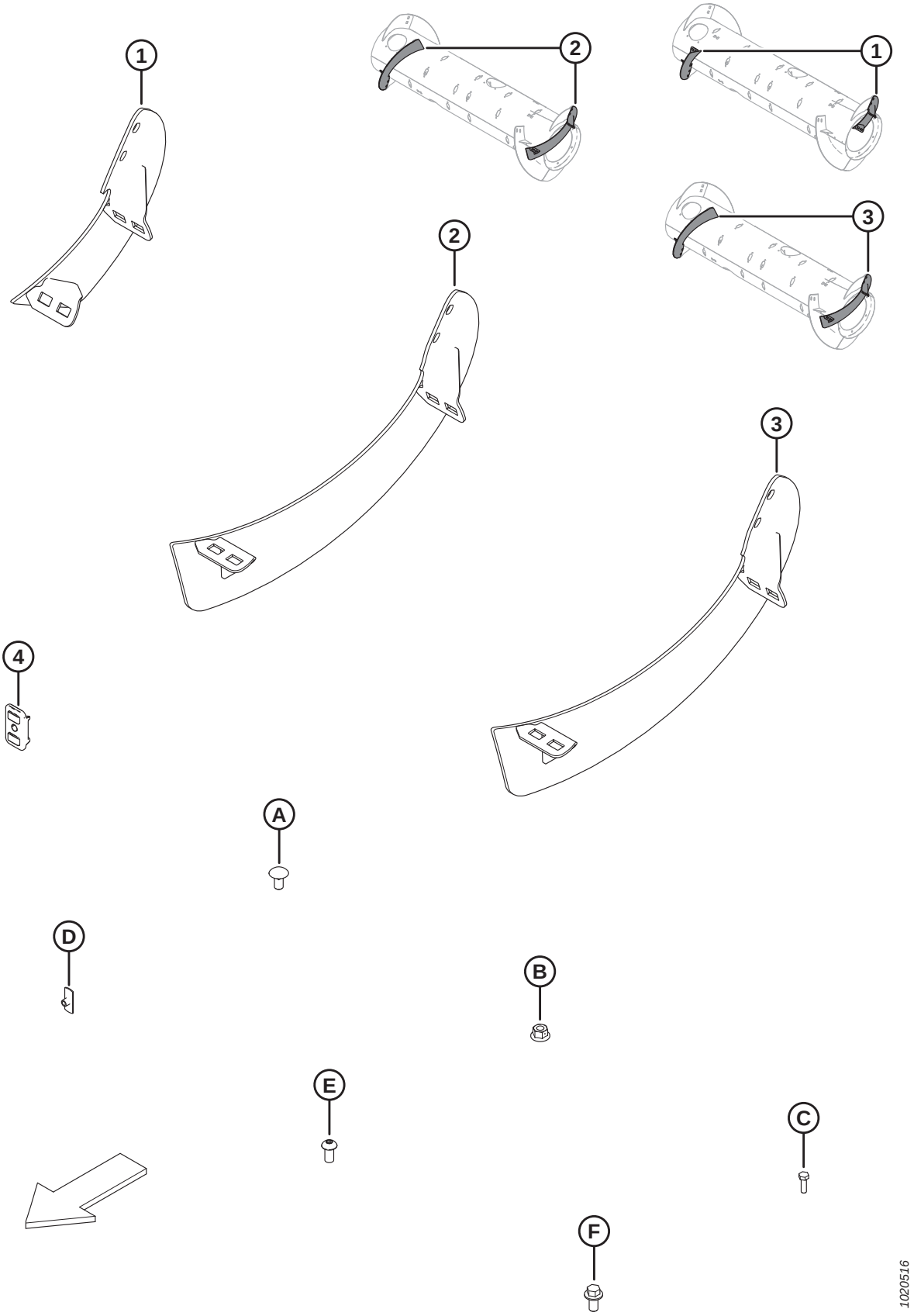

(OPTION) AUGER FLIGHTING KITS

NOTE:

Long flighting kits (MD #B6400 and 287032) are used to convert the auger to the optional Ultra Narrow configuration. Refer to your header operator's manual for more information.

Ref	Part Number	Description	Qty	Serial Number
	B6400	KIT – FM100 RTD, WEAR RESISTANT FLIGHT [478]		
	287031	KIT – FM100 RTD, MED FLIGHT [479]		
	287032	KIT – FM100 RTD, LONG FLIGHT [480]		
1	NSS	FLIGHTING, RTD – RH, MED [481]	1	
	NSS	FLIGHTING, RTD – LH, MED [482]	1	
	287887	FLIGHTING, RTD – RH, MED (HIWEAR)	1	
	287888	FLIGHTING, RTD – LH, MED (HIWEAR)	1	
2	NSS	FLIGHTING, RTD – RH, LONG [483]	1	
	NSS	FLIGHTING, RTD – LH, LONG [484]	1	
3	287890	FLIGHTING, RTD – RH, LONG (HIWEAR)	1	
	287889	FLIGHTING, RTD – LH, LONG (HIWEAR)	1	
4	213084	PLUG – FLIGHTING SLOT	2	
A	136178	BOLT – RHSN M10 X 1.5 X 20-8.8-A3L		
B	135799	NUT – HEX FLG CTR LOC M10 X 1.5-10-A3L		
C	252703	BOLT – HEX HD TFL M6 X 1 X 20 X SPCL-12.9-AA2L		
D	197263	NUT – TEE M6 X 1		
E	135723	SCREW – HEX SOC BTN HD M10 X 1.5 X 20-10.9-A3L		
F	152655	BOLT – HEX FLG HD M10 X 1.5 X 20-8.8-A3L		

478. Kit includes Long Flighting kit (MD #287032). Kits available through Whole Goods only.
479. Kit includes wear-resistant medium flighting, two plugs (MD #213084), hardware, and instructions.
480. Kit includes wear-resistant long flighting, two plugs (MD #213084), hardware, and instructions.
481. Service with medium right flighting (MD #287887).
482. Service with medium left flighting (MD #287888).
483. Service with long right flighting (MD #287890).
484. Service with long left flighting (MD #287889).

157 (Option) Dual Sensor Auto Header Height Control

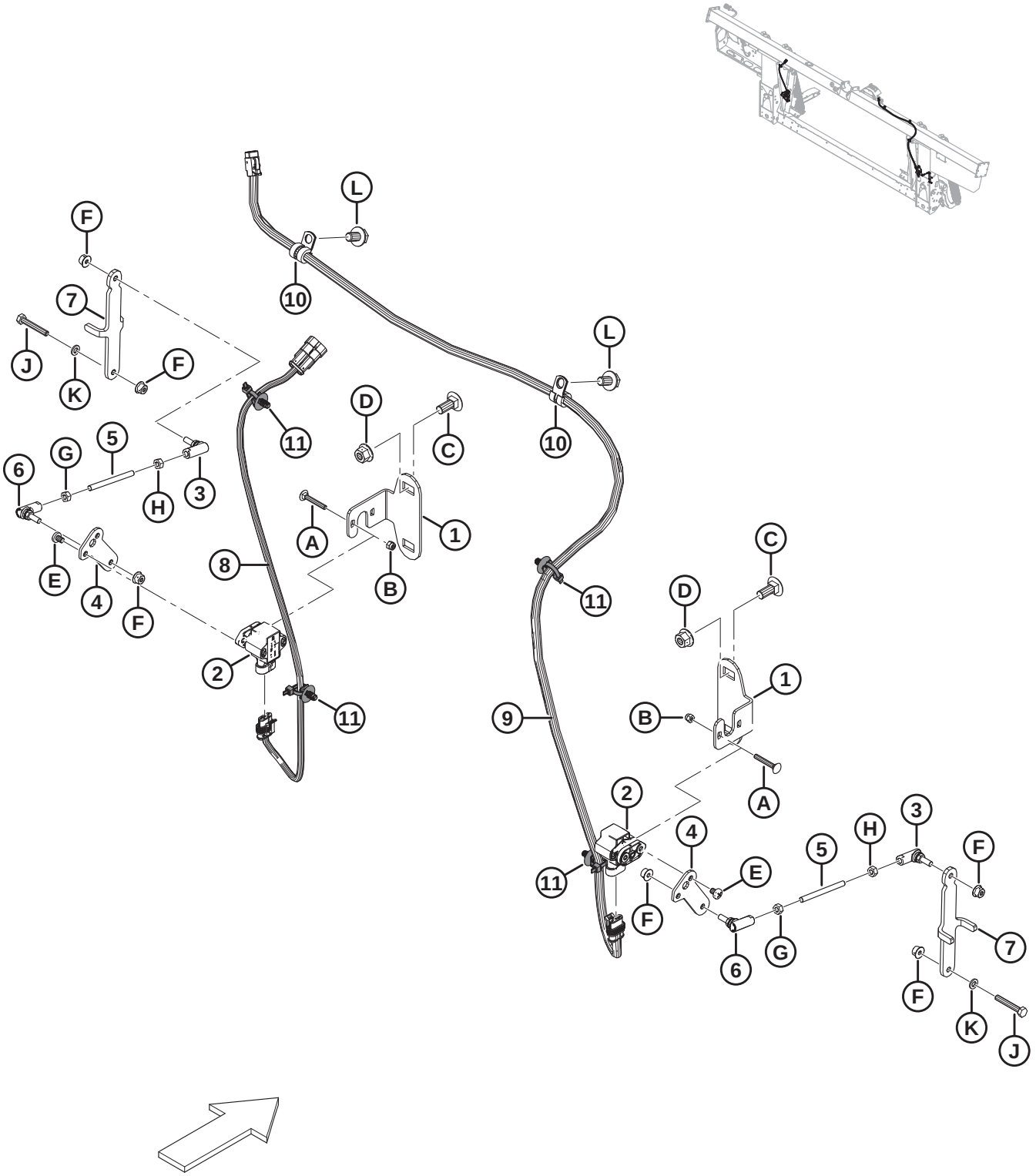

(OPTION) DUAL SENSOR AUTO HEADER HEIGHT CONTROL

Ref	Part Number	Description	Qty	Serial Number
	B6211	KIT – DUAL SENSOR AHHC [485]		
	248783	KIT – DUAL SENSOR AHHC [486]		
1	301865	BRACKET – AHHC SENSOR	2	
2	248643	ROTARY SENSOR – DUAL OUTPUT	2	
3	291485	BALL JOINT – LH THREAD	2	
4	248816	ARM – FLOAT SENSOR	2	
5	232650	ROD – THREADED	2	
6	291484	BALL JOINT – RH THREAD	2	
7	295179	BRACKET – SENSOR LINK	2	
8	276201	HARNESS – LH HEIGHT SENSOR	1	
9	276871	HARNESS – RH HEIGHT SENSOR	1	
10	136410	CLAMP – INSULATED 3/8 IN.	2	
11	136655	FASTENER – FIR TREE MT W/ TIE	4	
A	197229	BOLT – RHSN M5 X 0.8 X 35-4.6-A2L		
B	197230	NUT – HEX NYLOC M5 X 0.8-8-A2L		
C	135785	BOLT – RHSN M10 X 1.5 X 25-8.8-A3L		
D	135799	NUT – HEX FLG CTR LOC M10 X 1.5-10-A3L		
E	158704	SCREW – PAN HD M6 X 1 X 8-4.8-A2L		
F	152668	NUT – HEX FLG CTR LOC M6 X 1-8-A2L		
G	184683	NUT – HEX ISO 4032 M6 X 1-8-A2L		
H	136613	NUT – HEX LH ISO 4032 M6 X 1-8-AA2L		
J	135671	BOLT – HEX HD TFL M6 X 1 X 40-8.8-A2L		
K	184705	WASHER – FLAT M6-200HV-A2L		
L	136151	BOLT – HEX FLG HD TFL M10 X 1.5 X 16-8.8-A3L		

485. Includes Dual Sensor Auto Header Height Control kit (MD #248783). Kits available through Whole Goods only.
486. Includes all listed parts, hardware, and instructions.

158 (Option) FM100 Full Interface Filler – FD1

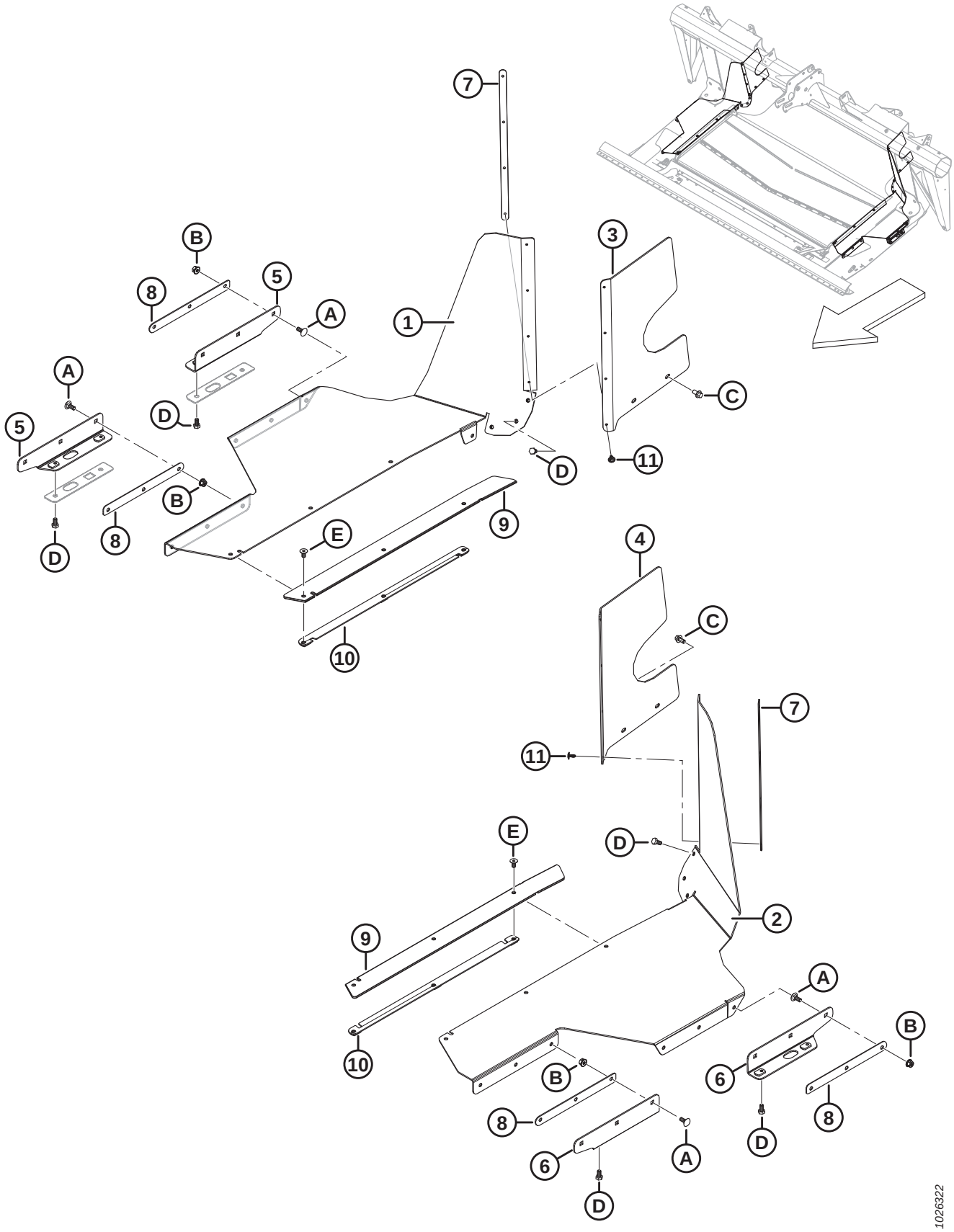

(OPTION) FM100 FULL INTERFACE FILLER – FD1

Ref	Part Number	Description	Qty	Serial Number
	B6445	KIT – FULL INTERFACE FILLER FD1 [487]		
1	287949	FILLER – SIDE DECK RH FD1	1	
2	287948	FILLER – SIDE DECK LH FD1	1	
3	213493	FILLER – RH REAR UPPER	1	
4	213492	FILLER – LH REAR UPPER	1	
5	295142	SUPPORT – SIDE FILLER RH WELDT FD1	2	
6	295143	SUPPORT – SIDE FILLER LH WELDT FD1	2	
7	276770	PLATE – FILLER RETAINER	2	
8	213295	PLATE – FILLER RETAINER	4	
9	287719	FILLER – REINFORCEMENT	2	
10	301726	RETAINER – SIDE FILLER WELDT	2	
11	293053	RIVET – POP	8	
A	197171	BOLT – RHSN M8 X 1.25 X 20-8.8-A2L		
B	135337	NUT – HEX FLG CTR LOC M8 X 1.25-8-A2L		
C	136485	BOLT – HEX FLG HD TFL M8 X 1.25 X 16-8.8-A3L		
D	50139	BOLT – HEX HD TFL M8 X 1.25 X 16-8.8-A2L		
E	252542	SCREW – HEX SOC CSK HD TFL M8 X 1.25 X 16-10.9-AA2L		

487. European market area only. Provides additional sealing between float module and header. Kits available through Whole Goods only.

159 (Option) Hillside Extension

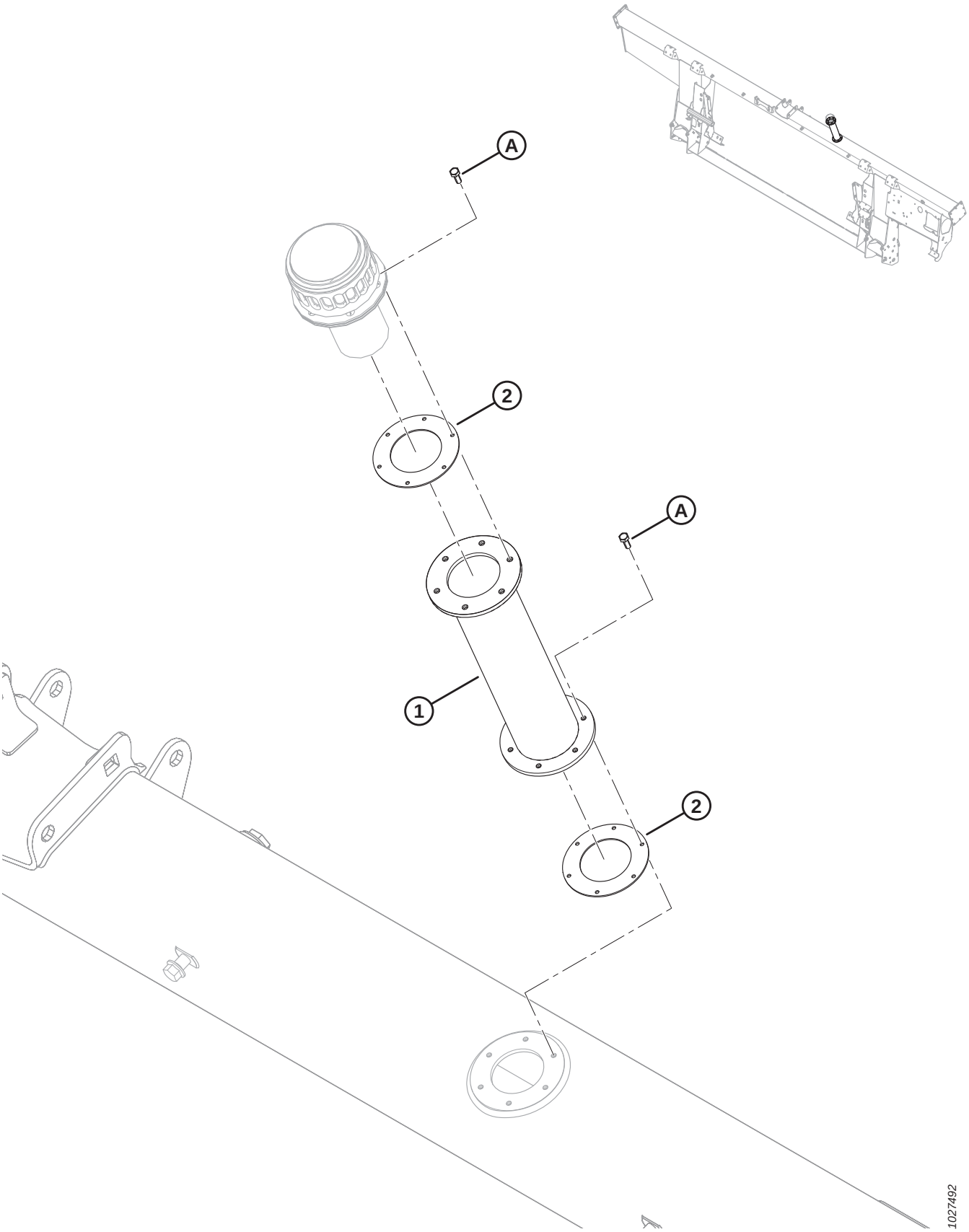

(OPTION) HILLSIDE EXTENSION

Ref	Part Number	Description	Qty	Serial Number
	B6057	KIT – HYDRAULIC RESERVOIR FILL EXTENSION [488]		
	312824	**KIT – HYDRAULIC RESERVOIR FILL EXTENSION** [489]		
1	NSS	HYD RESERVOIR FILL EXTENSION	1	
2	NSS	GASKET	2	
	166450	DECAL – WARNING, HOT SURFACE	2	
A	**320397**	**SCREW – HEX HD TFL M5 X 0.8 X 12-8.8-PLAIN (2022 AND LATER)** [490]		**421190–**
	135873	SCREW – MACH #10-32 X 0.5 IN. HEX **(2021 AND PRIOR)** [490]		**–421189**

488. Kit includes hydraulic reservoir fill extension (not sold separately), two gaskets (not sold separately), two decals (MD #166450), and twelve screws (MD #320397). Kits available through Whole Goods only.
489. Kit includes hydraulic reservoir fill extension (not sold separately), two gaskets (not sold separately), two decals (MD #166450), twelve screws (MD #320397), and instructions.
490. On model year 2021 and prior units, use imperial screw (MD #135873) to prevent cross threading a metric bolt into an imperial threaded hole.

160 (Option) In-Cab Side Draper Speed Control Kits

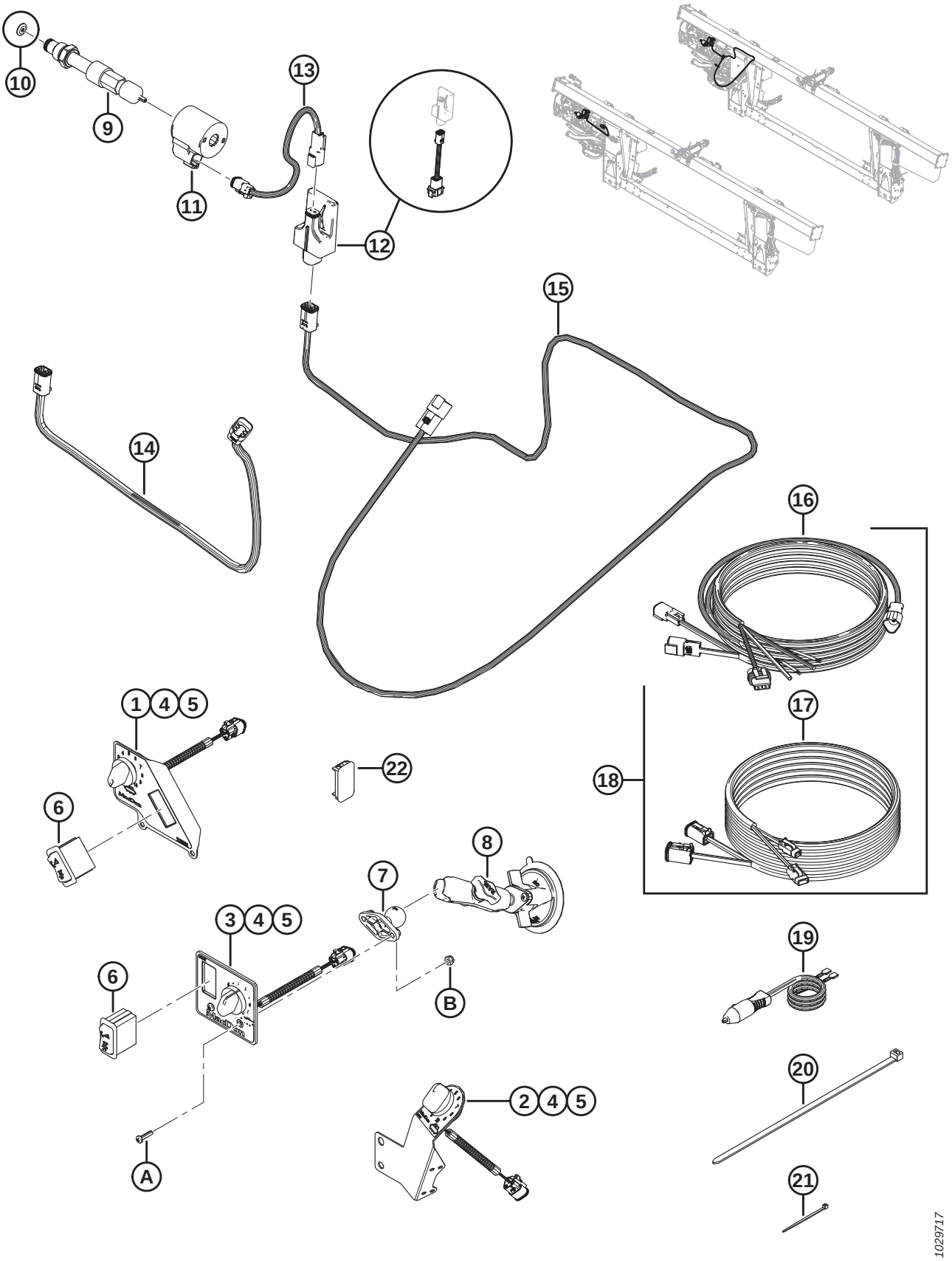

(OPTION) IN-CAB SIDE DRAPER SPEED CONTROL KITS

Ref	Part Number	Description	Qty B6701/B6702/B6703	Serial Number
	B6701	KIT – IN-CAB SIDE DRAPER SPEED CONTROL (JOHN DEERE) [491]	1/0/0	
	B6702	KIT – IN-CAB SIDE DRAPER SPEED CONTROL (CNH) [491]	0/1/0	
	B6703	KIT – IN-CAB SIDE DRAPER SPEED CONTROL (GENERIC) [491]	0/0/1	
1	287945	CONTROL PANEL – ICSDSC, JD [492]	1/0/0	
2	276671	CONTROL PANEL – ICSDSC, CNH [492]	0/1/0	
3	287944	CONTROL PANEL – ICSDSC, GENERIC [492]	0/0/1	
4	213459	POTENTIOMETER – 5K	1/1/1	
5	109773	KNOB – PLASTIC	1/1/1	
6	287797	SWITCH – ROCKER, TILT	1/0/1	
7	287749	BASE – BALL MOUNT	0/0/1	
8	287859	BASE – SUCTION CUP WITH ARM	0/0/1	
9	276631	VALVE – FLOW CONTROL [493]	1/1/1	
	220908	**KIT – SEAL**		
10	287227	ORIFICE PLATE – 0.18 IN. (2017 ONLY) [494]	1/1/1	–321189
11	209045	COIL – SOLENOID	1/1/1	
12	304377	KIT – VALVE DRIVER MODULE [495]	1/1/1	
	304376	HARNESS – VALVE DRIVER ADAPTER [496]	1/1/1	
13	213812	HARNESS – SOLENOID	1/1/1	
14	304254	HARNESS – VALVE DRIVER (CNH)	0/1/0	371190–
	213813	HARNESS – VALVE DRIVER (CNH) (2019 AND PRIOR) [497]	0/1/0	–371189
15	304370	HARNESS – VALVE DRIVER	1/0/1	371190–
	287894	HARNESS – VALVE DRIVER (2019 AND PRIOR) [497]	1/0/1	–371189
16	304210	HARNESS – CAB DRAPER CONTROL	0/1/1	346190–
17	304211	HARNESS – CAB DRAPER EXTENSION	0/1/1	346190–
18	304216	KIT – CAB DRAPER CONTROL HARNESS [498]	0/1/1	–346189
19	220570	HARNESS – AUX PWR TO QUICK DISC	1/1/1	
20	30753	FASTENER – CABLE TIE, BLACK, 305 MM LG	2/2/2	
21	16661	FASTENER – CABLE TIE, BLACK, 69 MM LG	15/15/15	

491. Kits available through Whole Goods only. Includes all listed parts and instructions. See parts list for quantities specific to kit.
492. Includes 5K potentiometer (MD #213459) and plastic knob (MD #109773).
493. Valve integrates orifice plate (MD #287227) into the valve cartridge assembly for model year 2018 . Model year 2017 had it as a separate part.
494. Serviceable part for model year 2017.
495. Includes valve driver module with loaded software (NSS) and adapter harness (MD #304376).
496. Valve driver adapter harness (MD #304376) used to connect valve driver module to model year 2019 and prior valve driver harnesses (MD #213813 and 287894).
497. Service part only for model year 2019 and prior units.
498. Kit is used to service model year 2018 and prior units with 2018 cab draper control harness (MD #213667). Includes cab draper control harness (MD #304210) and cab draper extension harness (MD #304211).

(OPTION) IN-CAB SIDE DRAPER SPEED CONTROL KITS

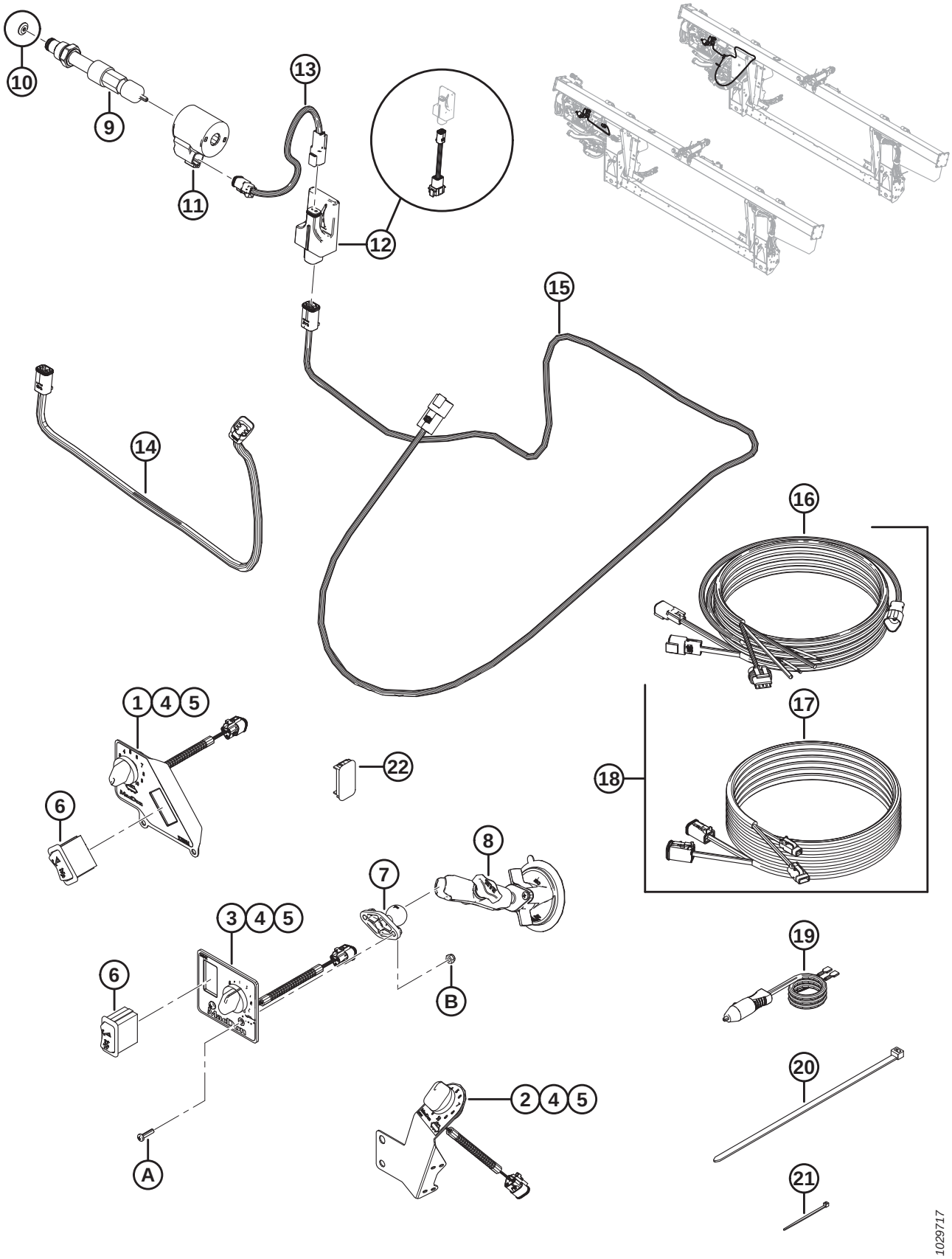

(OPTION) IN-CAB SIDE DRAPER SPEED CONTROL KITS

Ref	Part Number	Description	Qty B6701/B6702/B6703	Serial Number
22	287784	PLUG – PANEL [499]	0/0/1	
A	135161	SCREW – MACHINE, #10-32 UNF X 0.75 IN. [500]		
B	20012	NUT – NYLOC #10-32-GR5-AA3L [500]		

499. Supplied with Generic In-Cab Side Draper Speed Control kit (MD #B6703) to be installed in place of combine's non-functioning switch, after kit has been installed.
500. Service part only for Generic In-Cab Side Draper Speed Control kits (MD #B6703).

161 (Option) Stripper Bars

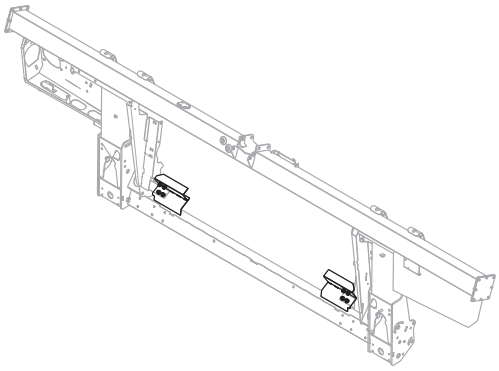

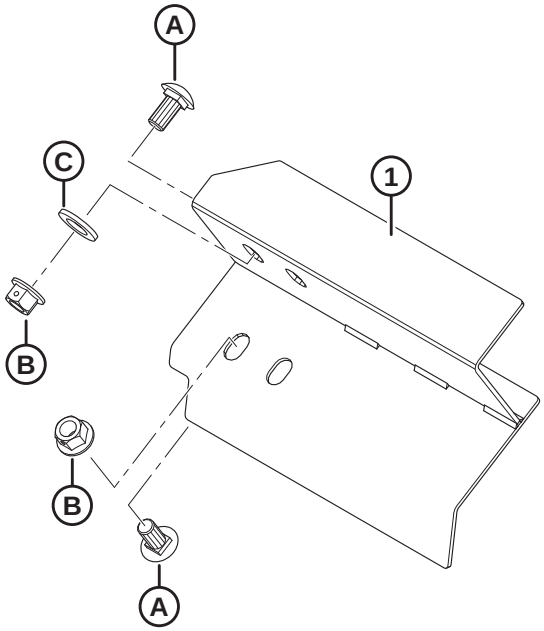

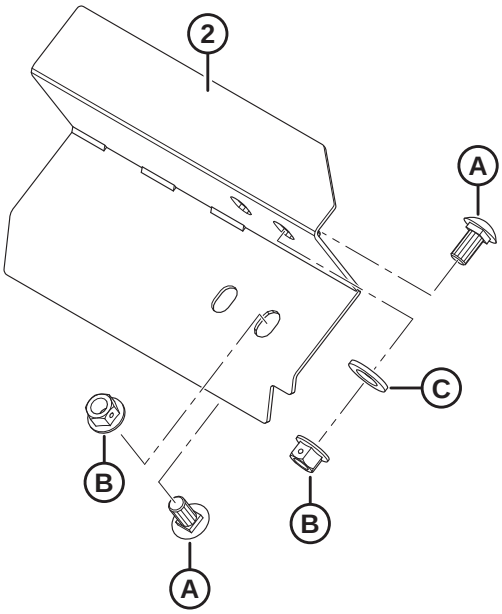

1023852

(OPTION) STRIPPER BARS

Ref	Part Number	Description	Qty	Serial Number
	B6042	KIT – STRIPPER BARS, 265 MM LG (WITHOUT CUTOUT) [501]		
	B6043	KIT – STRIPPER BARS, 265 MM LG (WITH CUTOUT) [501]		
	B6044	KIT – STRIPPER BARS, 325 MM LG [501]		
	B6045	KIT – STRIPPER BARS, 365 MM LG [501]		
	B6046	KIT – STRIPPER BARS, 403 MM LG [501]		
	B6213	KIT – STRIPPER BARS, 515 MM LG [501]		
1	213523	STRIPPER – WELDMENT, LEFT (265 MM LG W/O CUTOUT)	1	
	276899	STRIPPER – WELDMENT, LEFT (265 MM LG W/ CUTOUT) [502]	1	
	213573	STRIPPER – WELDMENT, LEFT (325 MM LG)	1	
	213567	STRIPPER – WELDMENT, LEFT (365 MM LG)	1	
	213561	STRIPPER – WELDMENT, LEFT (403 MM LG)	1	
	213579	STRIPPER – WELDMENT, LEFT (515 MM LG)	1	
2	213525	STRIPPER – WELDMENT, RIGHT (265 MM LG W/O CUTOUT)	1	
	276900	STRIPPER – WELDMENT, RIGHT (265 MM LG W/ CUTOUT) [502]	1	
	213574	STRIPPER – WELDMENT, RIGHT (325 MM LG)	1	
	213568	STRIPPER – WELDMENT, RIGHT (365 MM LG)	1	
	213562	STRIPPER – WELDMENT, RIGHT (403 MM LG)	1	
	213580	STRIPPER – WELDMENT, RIGHT (515 MM LG)	1	
A	135903	BOLT – RHSN M12 X 1.75 X 25-8.8-A3L		
B	136431	NUT – HEX FLG CTR LOC M12 X 1.75-10-A3L		
C	184717	WASHER – FLAT REG M16-200HV-AA1J		

501. Kits available through Whole Goods only.
502. For John Deere S6X0 Series combines.

162 (Option) Tilt Harness Kit

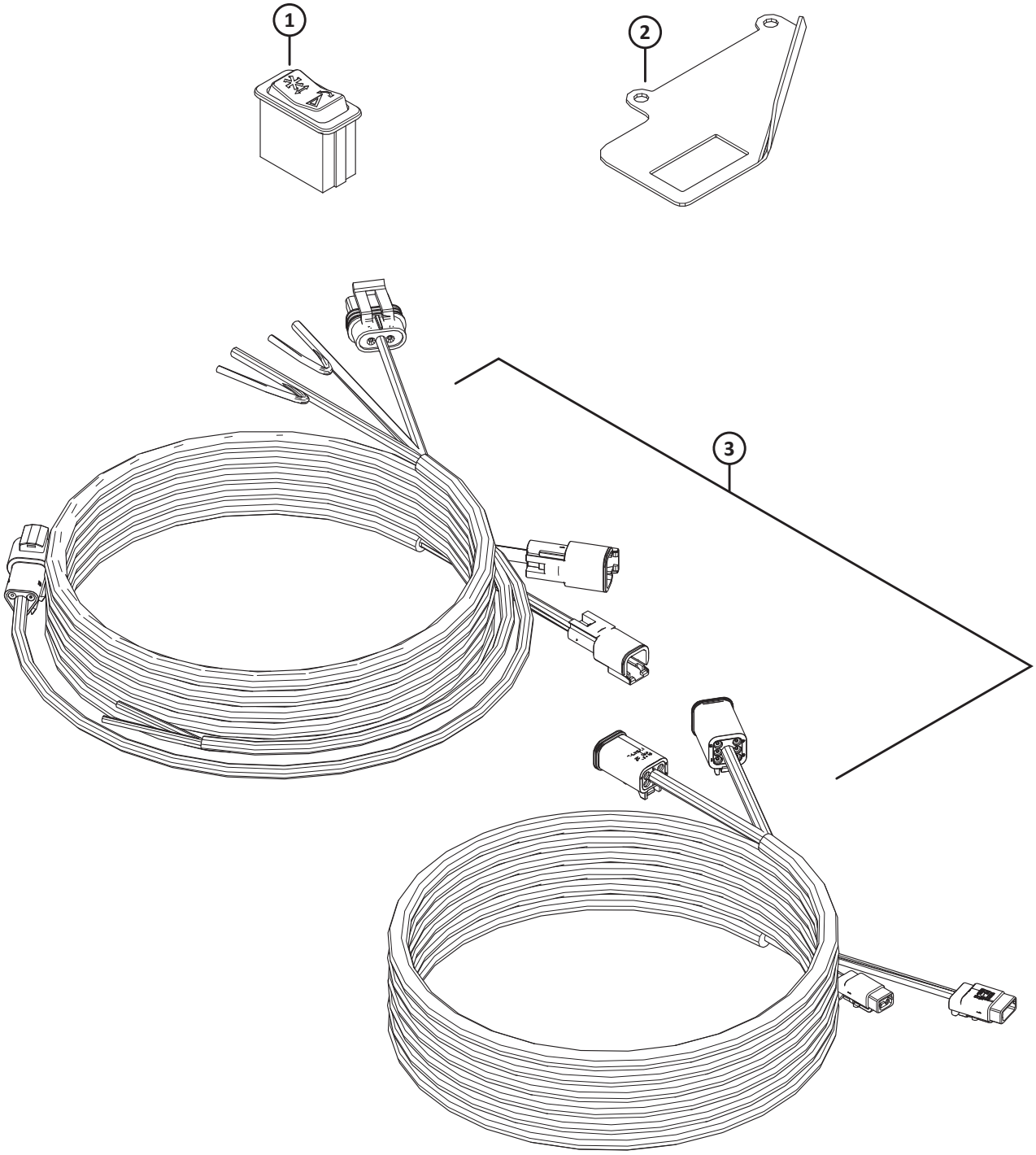

1037281

(OPTION) TILT HARNESS KIT

Ref	Part Number	Description	Qty	Serial Number
	335695	**KIT – 1 SERIES TILT HARNESS** [503]		
1	**287797**	**SWITCH – ROCKER, TILT**	**1**	
2	**220734**	**SUPPORT – ROCKER SWITCH**	**1**	
3	**304216**	**KIT – CAB DRAPER CONTROL HARNESS** [504]	**1**	
	304210	**HARNESS – CAB DRAPER CONTROL**		
	304211	**HARNESS – CAB DRAPER EXTENSION**		

503. Kit includes all listed parts.
504. Kit includes cab draper control harness (MD #304210) and cab draper extension harness (MD #304211).

Index

795 272
1709 324
2148 160
4761 160
5512 ..... 94, 162, 164, 166, 282, 410
6647 ..... 4, 174
6649 160
7642 ..... 160, 264, 268, 372, 414, 418, 422
7674 ..... 12, 150, 214, 218, 224, 226, 232, 238, 434
7900 ..... 160, 164, 166
9213 272
9333 272
13125 ..... 158, 342, 418
13617 424
14338 ..... 6, 418, 424, 434
16010 ..... 156, 160
16235 94
16266 160
16661 ..... 322, 418, 424, 434, 444
16681 ..... 80, 84, 88
18523 ..... 112, 162
18589 ..... 338, 416
18590 ..... 60, 328
18591 ..... 12, 94, 98, 110, 162, 224
18592 ..... 96, 356
18593 8
18596 ..... 188, 194
18597 328
18598 ..... 6, 58, 214, 274, 328
18599 ..... 44, 58, 82, 84, 94, 110, 162, 214, 282
18600 ..... 98, 162, 282
18601 ..... 8, 162, 278, 324
18603 ..... 44, 48, 50, 52
18604 ..... 56, 328
18605 ..... 94, 328
18607 ..... 80, 238
18608 324
18609 ..... 2, 96, 310, 324
18624 ..... 84, 90, 136, 144
18626 ..... 98, 278
18635 ..... 218, 224, 226, 232, 238
18636 282
18637 ..... 4, 150, 192, 194, 208, 210, 214, 220, 224, 228, 232, 238, 282, 326, 410
18638 ..... 186, 194, 204, 210, 214, 258, 274, 282
18639 282
18640 ..... 288, 292, 296, 324, 410
18648 ..... 82, 84, 88, 94, 98, 158, 164, 166, 278
18652 ..... 282, 346, 392
18654 ..... 4, 14, 16, 18, 20, 168
18664 82
18666 ..... 12, 44, 96, 112, 258
18669 ..... 76, 112, 326
18670 154
18671 ..... 10, 80, 84, 88, 94, 158, 272, 324
18689 8
18697 ..... 8, 44, 60, 82, 84, 90, 162, 186, 190, 194, 208, 210
18720 ..... 288, 292, 296, 410
18723 ..... 2, 44, 154, 198, 204, 210, 240
18724 ..... 188, 196, 214, 224, 232, 240, 328
18725 ..... 80, 84, 88
18738 ..... 82, 94
18768 ..... 198, 202, 204, 206, 210
18866 ..... 162, 164
18867 324
18898 280
18916 ..... 162, 164, 166
19634 156
19927 158
19957 12
19965 ..... 60, 112, 184, 186, 194, 202, 204, 210, 306, 420, 426
19966 ..... 58, 156, 170, 214
20012 446
20055 ..... 86, 90
20077 ..... 58, 192, 194, 208, 210, 220, 224, 238, 306
20078 ..... 108, 250
20213 ..... 8, 16, 20
20312 ..... 98, 324
20535 ..... 6, 48, 60
21006 44
21010 158
21055 ..... 6, 156, 162
21056 ..... 2, 12, 110, 146, 162
21066 ..... 44, 60, 162
21069 ..... 52, 64
21087 96
21102 ..... 138, 152, 328
21153 ..... 158, 164, 166
21194 44
21218 110
21235 270
21264 ..... 8, 12, 214, 326
21281 112
21282 ..... 338, 416
21301 252
21354 ..... 188, 194
21363 280
21376 ..... 158, 164, 166
21383 ..... 4, 44, 68, 76, 138
21403 112
21404 156
21425 280

INDEX

21447 ..... 102, 108
21449 60
21452 ..... 46, 48, 82, 296, 298
21455 ..... 82, 110, 152, 216, 414, 416, 420, 434
21456 282
21469 ..... 10, 12, 68, 76
21471 ..... 58, 338, 416
21472 ..... 16, 20, 46, 102, 108, 154, 214, 220, 224, 228, 232, 240, 282, 364
21476 ..... 184, 192, 202, 208
21484 ..... 98, 214
21491 ..... 4, 44, 60, 82, 84, 90, 94, 98, 188, 190, 194, 208, 210, 214, 224, 240, 282, 292, 296
21522 282
21526 214
21540 ..... 8, 162, 164, 166, 324
21558 156
21560 162
21561 ..... 48, 108, 112, 216
21567 ..... 4, 150, 216, 220, 224, 228, 232, 240
21568 152
21570 ..... 224, 232, 240
21572 ..... 82, 414, 416, 420, 434
21573 ..... 110, 152, 216
21575 ..... 8, 60, 82, 86, 90, 94, 98, 144, 150, 186, 194, 204, 210, 258
21576 ..... 110, 162
21577 164
21578 ..... 162, 186, 194
21580 ..... 184, 202, 218, 224, 226, 232, 238
21581 98
21583 ..... 44, 164
21589 ..... 94, 98
21590 ..... 220, 224, 228, 232, 238
21591 162
21594 ..... 258, 282
21599 162
21746 212
21760 ..... 184, 190, 202, 208
21761 130
21763 ..... 6, 52, 102, 106, 110, 152, 214, 248, 310, 332, 344, 348, 352, 358, 362, 378, 380, 388, 390, 394, 396, 400
21801 ..... 182, 190, 200, 206
21810 ..... 182, 186, 190, 194, 200, 206
21821 ..... 2, 6, 82, 84, 90, 104, 108, 110, 224, 232, 240, 282
21843 ..... 212, 224, 232, 238
21854 ..... 184, 188, 190, 194, 202, 208, 214, 224, 232, 240
21856 ..... 362, 388
21858 ..... 362, 388
21859 ..... 186, 194, 198, 204, 210
21863 ..... 4, 6, 46, 60, 62, 64, 82, 90, 110, 150, 154, 156, 164, 184, 202, 214, 240, 328
21868 ..... 162, 338, 416
21881 ..... 222, 230, 236
21887 ..... 158, 164, 166
21926 328
21941 ..... 2, 18, 162
21947 ..... 366, 404
21968 ..... 82, 90
21975 ..... 64, 102
23163 334
23164 114
23165 334
23745 354
26671 106
26846 280
27647 ..... 346, 392
29028 160
29934 388
30027 ..... 82, 84, 90, 94, 110
30035 82
30054 ..... 212, 222, 230, 236
30191 ..... 288, 292, 296
30203 280
30209 ..... 82, 84, 94, 96
30228 ..... 4, 6, 8, 12, 16, 20, 46, 60, 62, 64, 68, 76, 78, 82, 86, 90, 98, 102, 108, 110, 112, 138, 150, 154, 156, 162, 164, 170, 180, 184, 186, 190, 194, 202, 204, 206, 210, 214, 220, 224, 228, 232, 238, 250, 282, 306, 328, 346, 364, 392, 420, 426
30280 ..... 6, 96, 150, 156, 214, 228, 232, 238, 328, 358, 400
30282 ..... 102, 106
30284 ..... 102, 106
30307 214
30314 ..... 218, 226, 238
30316 334
30368 138
30375 106
30376 52
30433 ..... 218, 222
30441 ..... 60, 96, 162
30463 324
30504 ..... 6, 150, 228, 232, 238
30505 ..... 274, 278
30512 ..... 8, 12
30515 138
30516 ..... 160, 164, 166
30517 ..... 158, 164, 166
30520 ..... 94, 158, 164, 166
30523 74
30549 ..... 8, 96
30551 ..... 212, 238
30556 ..... 214, 222, 230, 236
30610 ..... 48, 50, 52
30627 ..... 198, 202, 204, 208, 210, 326
30628 256

INDEX

30630 ..... 298, 356
30632 ..... 198, 202, 204, 208, 210, 348, 420
30636 ..... 228, 232
30661 ..... 186, 194, 198, 204, 210
30693 ..... 46, 214, 310
30701 280
30702 280
30715 260
30716 ..... 174, 176
30753 ..... 102, 108, 110, 214, 312, 314, 366, 404, 444
30759 ..... 220, 224, 240
30811 ..... 96, 98
30813 ..... 108, 358, 362, 378, 392, 400
30820 242
30824 100
30833 162
30873 ..... 182, 190, 200, 206
30922 162
30934 ..... 182, 186, 190, 194, 198, 200, 204, 206, 210
30936 ..... 104, 108
30971 ..... 286, 290, 294, 296, 318
30981 ..... 52, 64
30999 ..... 64, 108
31465 274
31774 ..... 8, 12, 82, 84, 90, 326
31889 308
32070 ..... 114, 334
32247 ..... 374, 398
33955 22
34980 20
35618 160
35694 158
36651 334
37167 ..... 358, 400
39272 156
40095 302
40628 156
40701 ..... 102, 108, 344, 348, 358, 362, 376, 388, 390, 400
40702 ..... 48, 50, 52, 102, 108, 310, 314, 344, 348, 358, 362, 376, 388, 390, 400
40703 ..... 48, 50, 52, 314, 376
40704 ..... 48, 50, 52, 314, 376
40915 ..... 82, 86, 90, 136, 144
41982 ..... 158, 164, 166
42074 ..... 346, 348, 392, 418
42292 ..... 332, 388
42589 ..... 344, 348, 358, 362, 376, 388, 390, 400
42592 60
44209 ..... 288, 300, 314, 358, 400, 426
44210 ..... 286, 290, 292, 298, 312, 318, 344, 348, 362, 376, 388, 418
44611 334
45427 ..... 186, 194, 204, 210, 214
48050 162
49227 ..... 102, 108, 310, 344, 348, 358, 362, 376, 388, 390, 400
49232 ..... 102, 108, 346, 348, 358, 362, 388, 400
49306 ..... 186, 194, 198, 204, 210
49341 96
50019 ..... 212, 222, 230, 236
50022 ..... 64, 82, 102
50050 ..... 182, 190, 200, 206
50072 162
50083 270
50086 ..... 48, 50, 52
50101 170
50102 ..... 224, 232
50103 ..... 64, 102, 106
50104 ..... 52, 64, 182, 190, 200, 206
50120 20
50139 ..... 260, 262, 440
50154 274
50155 ..... 274, 306
50174 ..... 158, 164, 166
50175 ..... 50, 52, 190, 206
50178 ..... 108, 346, 348, 358, 378, 400
50184 72
50186 ..... 12, 44, 60, 68, 76, 78, 82, 84, 90, 94, 96, 98, 138, 144, 150, 154, 162, 170, 198, 204, 210, 240, 338, 416
50193 112
50197 ..... 102, 108, 162
50219 ..... 310, 318, 358, 362, 376, 388, 400, 426
50220 ..... 286, 290, 294, 300, 318
50223 ..... 288, 292, 296, 300, 314, 318
50225 ..... 6, 98, 112, 156, 162, 164, 220, 224, 240, 354
50226 ..... 10, 44
100456 ..... 156, 162, 184, 192, 202, 208, 224, 232, 240
100500 ..... 10, 22, 324
100532 ..... 44, 54
100706 54
100707 54
100708 54
100709 54
100710 54
100712 54
100714 54
100715 54
100716 54
100717 54
100718 54
100719 54
100720 54
100721 54
100722 54
100723 54
100726 54
100862 252
101007 ..... 158, 164, 166

INDEX

101897 ..... 156, 190, 194, 206, 210
101898 ..... 4, 12, 16, 20, 62, 82, 84, 90, 104, 112, 136, 156, 162
102264 ..... 2, 172
102509 44
102629 54
102630 54
102636 ..... 12, 96, 162, 324
103096 54
103351 ..... 102, 106
103361 12
103562 ..... 2, 18, 162
103575 308
103576 108
103738 ..... 80, 90, 182, 202, 214, 218, 222, 236, 312
103879 94
105066 ..... 68, 76
105069 ..... 82, 90
105135 ..... 68, 76
105136 ..... 68, 76, 78, 170
105141 ..... 68, 76
105364 94
108172 ..... 198, 204, 210
108233 ..... 48, 50, 358, 362, 378, 392, 400
109064 ..... 322, 424
109613 330
109717 170
109773 444
109791 308
109843 114
111099 8
111221 114
111528 310
111978 ..... 212, 218, 222, 226, 230, 238
111981 426
111982 426
111983 426
111984 426
111985 426
111986 426
112130 278
112184 ..... 182, 200
112866 ..... 288, 292, 294
112867 294
112868 ..... 288, 292, 294, 296
112935 ..... 224, 232, 238
113152 54
113153 54
113222 ..... 10, 22, 324
113229 44
113420 76
113435 ..... 80, 84, 90, 94
113482 114
113536 152
113561 ..... 152, 156, 374, 398
113566 156
113814 2
113937 22
114120 388
114140 388
114142 ..... 362, 388
114143 ..... 362, 388
114233 ..... 82, 90
115145 116
115146 ..... 116, 152, 222, 230
115147 ..... 116, 152, 222, 230
115148 152
115670 22
115672 ..... 292, 296
117015 162
118011 252
118137 ..... 82, 84, 90, 94, 136, 144, 156, 424
118154 ..... 14, 16, 18, 20, 168
118162 ..... 14, 16, 18, 20
118185 252
118193 ..... 14, 16, 18, 20, 102, 168
118239 ..... 152, 156
118301 ..... 16, 20, 140, 142
118302 ..... 14, 18, 140, 142
118344 ..... 14, 16, 18, 20, 140, 142
118345 ..... 16, 18, 20, 140, 142
118346 ..... 14, 168
118347 ..... 16, 168
118351 ..... 14, 16, 168
118491 ..... 22, 26, 34
119282 172
119284 172
119285 172
119384 172
119392 172
119415 ..... 172, 178
119442 172
119446 172
119447 172
119454 172
119455 172
119457 ..... 172, 178
119460 172
119518 178
119519 178
119530 ..... 172, 178
119531 178
119543 172
119722 ..... 172, 176
119723 ..... 172, 176
119728 172
119729 172
119747 172
120009 58
120058 56

INDEX

120127 2
120140 44
120141 44
120194 44
120462 58
120558 ..... 14, 16, 18, 20
120639 ..... 16, 18, 20
120703 8
120845 56
120899 44
120900 44
120901 44
120932 ..... 150, 218, 226, 230, 236
120933 ..... 150, 222, 236
123084 430
123180 ..... 264, 268, 372, 406, 414, 418, 422
123202 430
123306 56
123406 274
123517 12
123599 106
123627 84
123660 2
123661 2
123670 80
123676 106
123681 146
123682 146
123702 106
123751 2
123752 2
123755 ..... 8, 12
123756 ..... 8, 12
123788 12
123950 56
123951 56
123952 56
123953 56
123954 56
123955 56
123956 56
123957 56
123978 310
124338 ..... 20, 142
124344 ..... 20, 142
124775 168
124880 24
124881 24
125145 258
125146 258
125176 6
125229 214
125236 160
125256 158
125294 58
125343 110
125363 2
125377 ..... 50, 52
125393 112
125418 ..... 2, 18
125433 96
125435 96
125530 44
125588 56
125589 56
125602 56
125607 56
125654 324
125670 52
125672 52
125722 ..... 50, 52, 106
125741 62
125742 62
125764 44
125777 52
125780 52
129043 ..... 26, 28, 30, 32, 34, 38, 40, 42
129148 ..... 352, 396, 418
129149 390
129297 ..... 14, 16, 18, 20
129299 ..... 26, 30, 32, 36, 40, 42
129313 114
129481 376
129577 148
129578 148
129581 148
129582 148
129584 148
129589 148
129772 380
129773 380
129800 ..... 358, 400
129801 ..... 358, 400
129965 380
129976 ..... 358, 400
129977 ..... 358, 400
130283 252
131391 114
131392 114
131393 114
132033 44
132246 8
132248 ..... 150, 218, 226, 230, 236
132253 ..... 150, 222, 236
132254 8
132257 8
132303 ..... 186, 194, 204, 210
132404 20
132418 214
132420 2

INDEX

132451 58
132474 98
132475 98
132476 96
132531 56
132532 56
132607 ..... 56, 270
132692 58
132772 48
132773 ..... 150, 212, 218, 222, 226, 230, 236
132777 58
132852 116
132896 22
132897 24
132900 48
132906 ..... 8, 16, 20
133047 326
133086 334
133138 ..... 374, 398
133165 ..... 306, 418, 424
133166 ..... 306, 418, 424
133241 356
133242 356
133372 252
133421 280
133439 ..... 374, 398
133521 108
133537 334
133631 302
133632 302
133634 302
133637 302
133640 302
133641 302
133672 ..... 336, 414
133683 382
133716 434
133781 ..... 424, 434
133877 268
133942 248
133980 336
133981 336
133992 ..... 160, 164
133997 ..... 418, 434
134002 6
134003 6
134010 ..... 110, 366, 388, 404
134011 ..... 110, 366, 388, 404
134053 ..... 366, 404
134438 2
134442 110
134741 ..... 110, 396
134746 ..... 332, 352, 366, 368, 380, 394, 396, 404
134948 394
134954 110
135157 ..... 46, 60, 62, 78, 82, 170, 274
135161 446
135193 ..... 104, 108, 192, 208
135213 ..... 212, 218, 222, 226, 230, 236
135233 ..... 110, 136, 152, 214
135234 ..... 102, 106
135235 ..... 222, 230, 236
135238 426
135240 ..... 50, 52
135241 212
135248 ..... 156, 184, 192, 202, 208, 224, 232, 240, 328
135267 ..... 352, 396
135290 272
135305 328
135315 ..... 8, 16, 20
135319 252
135337 ..... 252, 256, 260, 338, 348, 362, 378, 416, 420, 426, 432, 440
135340 2
135358 ..... 282, 410
135367 ..... 96, 100, 240
135369 ..... 10, 292, 296
135372 ..... 48, 50, 52, 64
135381 ..... 282, 410
135386 ..... 212, 218, 222, 226, 230, 238
135397 ..... 358, 400
135400 ..... 286, 290
135401 300
135423 328
135434 214
135443 ..... 64, 102, 106, 110, 190, 206, 214, 238, 332
135444 ..... 102, 106, 190, 206, 314, 344, 348, 358, 362, 378, 388, 390, 400
135448 112
135450 180
135464 12
135507 ..... 184, 186, 190, 194, 202, 204, 206, 210, 220, 224, 240
135511 ..... 224, 232, 240
135540 212
135554 ..... 286, 288, 292, 294, 296, 300, 314, 318
135579 ..... 4, 174, 214
135587 318
135598 344
135613 ..... 218, 222
135623 156
135626 ..... 24, 26, 30, 32, 36, 40, 42, 252
135628 24
135630 ..... 24, 252
135632 24
135647 ..... 190, 206
135655 354
135665 ..... 214, 238
135671 438
135685 ..... 182, 200, 212, 238

INDEX

135691 288
135694 282
135704 156
135709 ..... 224, 232, 238, 380
135716 102
135718 248
135723 ..... 340, 406, 436
135734 318
135737 96
135748 282
135775 318
135777 ..... 300, 314
135778 ..... 310, 388
135780 ..... 358, 400, 426
135785 ..... 172, 178, 198, 204, 210, 248, 256, 276, 278, 438
135786 ..... 286, 290, 294
135791 318
135799 ..... 172, 178, 198, 204, 210, 248, 250, 252, 256, 260, 264, 274, 278, 282, 288, 292, 296, 306, 324, 336, 340, 342, 346, 350, 356, 358, 372, 374, 378, 388, 392, 398, 400, 406, 416, 420, 426, 436, 438
135800 316
135818 332
135860 ..... 346, 348
135865 ..... 288, 292, 300, 310, 314, 318, 358, 362, 376, 388, 400
135866 ..... 296, 312, 314, 318, 358, 362, 376, 400, 426
135867 ..... 286, 290, 294, 298, 312, 318, 344, 348, 388, 418
135868 ..... 286, 290, 294, 314, 318
135873 ..... 248, 442
135890 296
135894 ..... 348, 420
135900 276
135901 ..... 286, 290, 294
135903 ..... 342, 418, 426, 448
135906 60
135917 376
135957 ..... 288, 292, 296, 318, 376
135963 ..... 184, 202
135995 ..... 310, 324
136024 ..... 288, 298, 300, 408
136036 ..... 254, 374, 398
136050 256
136089 ..... 286, 290, 298
136095 ..... 310, 318, 362, 376, 392
136106 290
136108 376
136110 ..... 296, 298, 316
136113 ..... 48, 198, 204, 210, 260
136137 282
136141 ..... 342, 420
136151 ..... 308, 312, 326, 330, 388, 438
136167 ..... 424, 434
136178 ..... 340, 374, 388, 398, 406, 436
136181 344
136209 ..... 132, 346, 350, 360, 364, 378, 388, 392, 402
136231 260
136246 ..... 286, 290, 298
136248 252
136265 362
136266 ..... 346, 348
136291 274
136300 426
136303 318
136324 248
136325 ..... 310, 346, 348, 358, 362, 378, 400
136326 ..... 346, 348, 362
136337 314
136347 ..... 286, 290, 294, 318
136378 278
136410 ..... 102, 106, 328, 438
136418 318
136431 ..... 136, 274, 282, 306, 336, 342, 354, 356, 374, 384, 386, 398, 414, 418, 422, 426, 448
136440 ..... 274, 282, 310
136441 ..... 48, 274
136447 ..... 288, 292, 296
136455 282
136458 318
136476 ..... 342, 420
136485 ..... 262, 346, 348, 358, 364, 378, 388, 392, 400, 440
136503 376
136506 ..... 172, 374, 398
136519 376
136561 ..... 274, 316, 356, 432
136596 326
136604 432
136613 ..... 328, 432, 438
136625 ..... 336, 354, 374, 384, 386, 398, 422
136652 216
136654 212
136655 ..... 110, 332, 438
136684 314
136699 310
136704 326
136736 274
136741 362
136748 ..... 370, 432
136757 274
136759 ..... 228, 234, 268
136760 312
136766 ..... 286, 300
136773 432
136841 276
136846 292
136868 152
136886 262

INDEX

137092 ..... 66, 74
137118 ..... 68, 76
137142 ..... 66, 72
137221 ..... 80, 84, 88
137277 ..... 66, 72
137285 ..... 66, 72
137291 ..... 80, 88
137315 ..... 80, 84, 88
137347 ..... 80, 88
137348 ..... 82, 90
137350 ..... 80, 90
137352 ..... 80, 88
137354 ..... 80, 88
137356 ..... 80, 90
137375 ..... 80, 82, 84, 88, 90, 182, 190, 200, 206
137415 70
137416 72
137451 84
137456 84
137476 ..... 80, 84, 88
137503 ..... 82, 92
137506 ..... 66, 72
137515 ..... 80, 88
137519 74
137523 74
137529 ..... 68, 74
137532 ..... 66, 74
137535 ..... 66, 72
137536 ..... 66, 72
137543 ..... 66, 72
137568 70
137569 72
137570 70
137571 72
137626 ..... 80, 84, 88, 94, 172
137691 88
137699 74
137702 ..... 82, 92
137721 ..... 80, 88
137727 ..... 10, 60, 184, 192, 202, 208
137753 ..... 80, 84, 90
137754 ..... 66, 74
137794 138
137795 138
137825 88
137826 88
137827 88
137909 68
137910 76
137913 76
137915 76
137916 76
137917 76
137918 76
137924 138
137968 76
137969 76
137970 ..... 82, 90
137971 ..... 66, 74
137980 ..... 66, 72
138086 152
138087 152
139003 54
139630 ..... 110, 152
139631 152
139632 152
139633 152
140135 ..... 14, 16, 18, 20
140225 334
140250 84
142777 302
144321 160
144324 160
144374 158
144376 160
144378 ..... 158, 164, 166
144409 160
144415 ..... 156, 160
144425 158
144433 160
144471 158
144505 ..... 160, 256
144531 ..... 158, 164, 166
144577 158
144724 158
144739 158
144741 158
144742 158
144860 164
144873 158
144880 ..... 160, 164
144899 ..... 158, 164
144934 ..... 160, 164
144935 164
144956 160
144962 160
144966 ..... 160, 164
144968 158
144971 158
144976 158
144989 160
145106 56
145122 56
145148 56
145249 58
145345 56
145357 56
145361 58
145428 56
145461 96

INDEX

145492 10
145548 56
145593 56
145706 44
145840 58
148645 216
148798 136
150890 302
150891 302
151551 ..... 16, 20
151691 272
151793 272
151941 ..... 384, 386, 422
151942 ..... 384, 386, 422
152439 ..... 338, 354, 372, 416
152520 254
152655 ..... 248, 310, 316, 340, 346, 348, 360, 364, 378, 380, 392, 402, 406, 426, 436
152668 ..... 216, 248, 262, 276, 326, 330, 370, 432, 438
152730 ..... 274, 336, 338, 342, 414, 416, 420
152732 ..... 292, 388
152736 ..... 414, 418, 434
152863 132
153151 ..... 358, 400
153933 ..... 366, 404
156037 280
156051 308
156501 ..... 160, 324
156574 324
156725 ..... 344, 348, 358, 362, 376, 388, 390, 400
156741 324
156743 ..... 268, 276, 326
156783 ..... 374, 398
156839 324
156843 328
156948 354
156969 328
158080 ..... 342, 418
158217 114
158253 388
158377 ..... 322, 424
158704 ..... 328, 438
159020 256
163184 ..... 376, 392
163598 ..... 346, 348, 358, 362, 378, 388, 392, 400
164009 6
164061 ..... 80, 84, 90
164109 88
164126 ..... 80, 90
164131 ..... 418, 424, 434
164141 88
164213 ..... 80, 84, 88
164214 ..... 80, 84, 88
164215 94
164216 94
164750 ..... 80, 88
164754 78
164773 96
164780 94
164781 94
164800 ..... 96, 150
164815 ..... 80, 88
164817 ..... 80, 88
164821 84
164825 ..... 96, 150
164858 90
164885 90
164887 ..... 80, 84
164894 72
164895 74
164930 ..... 80, 84
164933 ..... 80, 84, 90
164934 94
164945 ..... 80, 84, 94
164947 88
164948 88
164953 ..... 80, 84
164955 80
164958 78
164965 78
164967 78
164988 180
164993 180
164995 180
165103 ..... 212, 218, 222, 226, 230, 236
165168 112
165188 112
165209 ..... 16, 168
165218 ..... 114, 334
165294 52
165297 52
165380 212
165386 112
165429 112
165489 114
165490 114
165524 ..... 6, 116
165588 112
165594 8
165722 112
165727 112
165734 96
165735 56
165858 6
165993 114
166309 124
166450 442
166466 114
170851 314
171068 152

INDEX

171277 304
172133 112
172134 112
172158 98
172194 58
172195 58
172196 58
172197 58
172198 58
172259 ..... 6, 60
172340 ..... 186, 194, 204, 210
172363 60
172480 10
172507 ..... 186, 194
172511 ..... 186, 194
172558 274
172710 58
172758 106
172826 10
172830 10
172831 10
172875 146
172877 ..... 110, 226, 232
172896 10
172922 98
172924 8
172976 8
172978 102
174035 186
174081 ..... 186, 194
174082 ..... 186, 194
174131 334
174165 24
174168 ..... 190, 206
174176 ..... 194, 210
174215 44
174217 44
174238 212
174240 212
174242 212
174243 212
174250 48
174251 48
174253 52
174254 50
174256 52
174257 50
174262 212
174263 212
174270 44
174299 52
174300 52
174304 ..... 44, 182, 190, 200, 206
174318 212
174321 212
174322 212
174324 212
174333 98
174391 2
174416 10
174418 10
174422 ..... 212, 222, 230, 236
174436 ..... 114, 334
174499 48
174513 214
174514 214
174521 214
174538 214
174547 212
174585 212
174586 214
174632 114
174676 114
174684 114
174714 56
174769 258
174816 324
174845 ..... 22, 28, 30, 38, 40
174849 ..... 66, 72
174857 22
174858 96
174879 98
174883 214
174922 ..... 160, 164
174926 152
174992 44
176009 ..... 8, 96, 100
180094 294
183506 270
183508 272
184372 114
184422 114
184437 434
184440 ..... 416, 434
184461 ..... 318, 348, 388, 418
184462 ..... 292, 362, 388
184463 ..... 312, 318, 362
184572 ..... 338, 416
184579 214
184589 ..... 98, 188, 196, 426
184648 ..... 256, 362
184649 260
184652 ..... 174, 176, 256, 378
184655 ..... 228, 232, 252
184657 ..... 248, 260, 264, 346, 348, 358, 372, 374, 378, 388, 392, 398, 400, 416
184661 288
184662 ..... 250, 274, 282, 288, 292, 296, 306, 324, 336, 342, 356, 420, 426
184667 ..... 282, 336, 338, 356, 414, 416, 426

INDEX

184669 .....228, 232, 354, 374, 384, 386, 398, 422, 426
184674 .....228, 232
184675 .....268, 374, 398
184683 .....328, 432, 438
184688 248
184694 252
184695 274
184697 426
184699 428
184701 432
184705 ..... 274, 330, 356, 432, 438
184706 262
184708 248
184709 .....174, 176, 256
184711 ..... 256, 288, 292, 376, 392
184712 326
184714 .....288, 292, 298, 300, 336, 338, 342, 354, 356, 374, 384, 386, 398, 414, 416, 418, 422
184717 ..... 282, 342, 418, 426, 448
184718 6
187006 354
187018 344
187031 344
187081 430
187112 248
187137 ..... 264, 340, 372, 406, 416
187252 ..... 286, 290, 294, 408
187428 272
187466 280
187476 280
187477 280
187478 280
187480 .....280, 410
187481 280
187482 280
187483 282
187484 280
187485 280
187486 280
187487 280
187492 280
187494 280
187495 280
187518 274
187520 280
187524 280
187550 .....302, 422
187551 302
187553 .....302, 422
187621 310
187637 310
187641 328
187653 328
187655 328
187658 328
187659 328
187660 310
187694 328
187696 280
187697 280
187698 280
187708 328
187730 310
187732 250
187918 ..... 286, 290, 294, 408
188467 162
190752 256
190866 376
191489 ..... 338, 416, 426, 432
191705 .....288, 300
193008 158
193009 160
193014 160
193016 160
193022 160
193031 .....158, 164, 166
193034 114
193057 .....156, 158
193058 156
193059 156
193183 156
193187 156
193188 156
193202 156
193211 162
193212 156
193214 .....158, 164
193215 .....158, 164
193216 160
193217 160
193240 152
193241 152
193242 152
193243 152
194033 .....288, 292, 296
194082 .....358, 376, 400
194521 334
197122 274
197154 428
197171 .....132, 256, 440
197229 .....328, 438
197230 .....328, 432, 438
197263 .....264, 268, 340, 372, 406, 414, 416, 420, 422, 436
197319 426
197320 426
202991 .....226, 230
203547 110
209032 314
209045 444

INDEX

212250 324
213084 .....264, 340, 372, 406, 414, 416, 418, 422, 436
213097 272
213098 272
213110 272
213112 272
213153 272
213167 314
213174 314
213182 .....358, 400
213184 .....358, 400
213204 .....358, 400
213205 .....358, 400
213211 .....366, 404
213264 390
213281 344
213295 440
213307 310
213329 314
213340 260
213350 .....358, 362, 400
213354 .....358, 400
213363 310
213374 376
213418 250
213419 250
213420 272
213459 444
213492 .....262, 440
213493 .....262, 440
213523 448
213525 448
213546 270
213552 270
213554 270
213557 270
213561 448
213562 448
213567 448
213568 448
213573 448
213574 448
213579 448
213580 448
213592 .....354, 372
213593 .....354, 372
213605 268
213608 268
213613 .....354, 372
213614 .....354, 372
213649 270
213654 270
213656 268
213657 268
213659 270
213660 268
213679 270
213731 274
213733 274
213734 252
213743 314
213750 270
213753 262
213759 262
213764 248
213781 334
213783 334
213801 270
213802 270
213812 444
213813 444
213821 324
213824 380
213827 312
213828 312
213833 .....338, 416
213834 .....338, 416
213843 .....338, 416
213844 .....338, 416
213845 .....338, 416
213851 270
213857 272
213859 270
213864 314
213965 .....344, 348, 358, 376, 390, 400
220010 44
220011 44
220012 44
220013 44
220025 74
220084 114
220099 160
220101 ..... 14, 16
220103 ..... 14, 16
220107 6
220114 ..... 16, 18, 20
220115 18
220181 56
220183 56
220184 56
220187 8
220197 212
220241 106
220262 58
220264 58
220317 272
220324 214
220326 156
220384 58
220387 58

INDEX

220478 ..... 102, 106
220553 10
220554 ..... 8, 10
220570 ..... 322, 424, 444
220571 434
220572 ..... 414, 416, 418, 434
220589 106
220590 106
220591 106
220597 106
220598 106
220607 106
220608 ..... 102, 106
220609 ..... 102, 106
220610 ..... 102, 106
220611 ..... 102, 106
220612 ..... 102, 106
220613 ..... 102, 106
220614 ..... 102, 106
220615 106
220616 106
220617 106
220625 ..... 102, 106
220636 58
220637 58
220638 58
220639 58
220640 58
220641 58
220642 58
220679 324
220734 ..... 322, 450
220766 304
220797 114
220798 114
220799 114
220807 126
220808 126
220809 126
220810 126
220811 126
220813 126
220814 126
220817 122
220818 122
220819 122
220820 122
220821 122
220823 122
220824 122
220831 124
220832 124
220833 124
220834 124
220835 126
220836 122
220863 124
220868 124
220869 124
220870 124
220871 124
220876 126
220885 122
220908 444
220936 56
220939 ..... 66, 72, 180
220941 ..... 66, 72, 180
220944 56
220951 320
220959 ..... 376, 392
220960 320
220961 320
220963 320
220965 320
229013 10
229014 10
229019 10
231368 250
231389 ..... 280, 412
231448 278
231534 ..... 280, 412
231647 252
231765 256
231766 256
231799 260
231800 260
232233 ..... 226, 230
232650 ..... 328, 432, 438
233371 ..... 198, 204, 210
233395 ..... 186, 194
233450 ..... 198, 204, 210
233513 ..... 198, 204, 210
233514 ..... 198, 202, 204, 206, 210
233519 ..... 198, 204, 210
233625 ..... 198, 202, 204, 206, 210
237316 ..... 274, 374, 398
237556 428
237563 428
240010 256
240012 256
240013 256
240101 248
240254 256
240264 256
240418 260
240455 324
244671 160
244722 158
244727 152
244748 160

INDEX

244760 156
245042 56
245083 74
245084 ..... 66, 72
245093 118
245122 252
245159 376
245160 320
245199 ..... 80, 84, 90
245246 ..... 374, 398
245266 70
245267 72
245272 76
245273 76
245276 76
245277 76
245316 252
245362 136
245396 112
245397 112
245428 120
245432 120
245433 120
245434 120
245435 120
245438 120
245439 120
245441 120
245443 120
245450 170
245476 114
245477 114
245590 64
245620 280
245671 96
245677 2
245678 2
245753 314
245760 ..... 386, 422
245761 ..... 386, 422
245763 ..... 338, 416
245815 ..... 338, 416
245816 ..... 338, 416
245852 ..... 338, 416
245915 ..... 218, 222, 226, 230, 236
245926 144
245928 ..... 218, 226, 238
245931 ..... 218, 224, 226, 232, 238
245936 ..... 218, 226, 238
245943 44
245946 ..... 224, 232, 238
245955 ..... 222, 230, 238
245956 ..... 218, 224, 226, 232, 238
245962 114
245966 278
245992 98
245993 98
248089 ..... 286, 298
248096 268
248117 268
248144 272
248145 268
248232 272
248261 324
248285 270
248348 278
248349 278
248388 272
248407 280
248408 280
248538 268
248643 ..... 328, 432, 438
248756 248
248757 248
248783 438
248816 438
248850 282
248914 256
248960 ..... 344, 390
252076 ..... 292, 296
252179 ..... 172, 176
252187 274
252188 274
252198 324
252208 ..... 288, 292, 294
252210 ..... 48, 50, 52, 64
252211 ..... 48, 50, 52, 64
252272 252
252288 274
252296 ..... 212, 218, 222, 226, 230, 238
252305 162
252314 214
252368 ..... 224, 232, 238
252399 ..... 222, 230, 236
252414 ..... 48, 50, 52, 314
252423 54
252517 8
252537 214
252541 ..... 216, 228, 234
252542 ..... 262, 440
252554 314
252564 324
252578 212
252638 274
252639 274
252640 ..... 288, 292, 296
252641 ..... 292, 296
252642 ..... 288, 298
252650 344
252655 ..... 358, 400

INDEX

252662 318
252681 296
252687 ..... 68, 76
252691 274
252692 310
252693 378
252694 ..... 358, 400
252701 ..... 252, 274
252703 ..... 264, 268, 340, 372, 406, 414, 416, 420, 422, 436
252752 44
252794 ..... 182, 190, 202, 206
252795 ..... 182, 190, 202, 206
252870 12
252942 ..... 64, 102
252993 354
252996 ..... 114, 334
253092 90
253160 56
253164 6
253290 94
253297 6
253298 6
253299 6
253305 102
253412 96
253446 ..... 182, 190, 200, 206
253477 ..... 220, 224, 228, 232, 238
253499 2
253500 152
253503 72
253514 76
253515 76
253552 ..... 2, 18
253570 ..... 218, 222, 236
253582 ..... 218, 222, 226, 230, 236
253601 6
253602 6
253624 6
253627 6
253668 ..... 218, 222, 236
253678 236
253680 236
253681 236
253696 236
253702 ..... 218, 226, 238
253703 ..... 224, 232, 238
253704 ..... 218, 226, 238
253705 ..... 224, 232, 238
253708 ..... 218, 236
253709 ..... 222, 236
253722 ..... 182, 202
253728 114
253815 ..... 102, 106
253839 70
254089 432
254095 432
254096 432
254175 152
254248 ..... 182, 200
255004 6
255014 118
255019 6
255021 118
255041 6
255115 118
255117 118
255131 118
255133 118
255259 118
255260 118
255282 98
255316 118
255318 118
255328 110
255383 56
255442 2
255460 ..... 224, 232, 238
255461 ..... 222, 230, 236
255462 ..... 222, 230, 236
255465 ..... 242, 244
255471 ..... 222, 230, 236
255476 244
255477 244
255497 242
255509 238
255510 238
255534 244
255535 244
255536 244
255537 244
255538 244
255539 244
255540 244
255541 244
255542 244
255543 244
255544 244
255545 244
255546 244
255547 244
255574 242
255577 242
255580 242
255583 242
255678 6
255679 6
255712 70
255716 70
255735 70

INDEX

255738 70
255746 70
255749 70
255788 98
255791 150
255829 ..... 182, 190, 200, 206
255881 ..... 182, 190
255883 ..... 182, 186, 190, 194, 200, 204, 206, 210
255905 70
255908 70
255927 130
255928 130
255929 130
255930 130
255947 242
258107 396
258150 2
258253 152
258262 152
258876 258
273078 88
273258 ..... 80, 88
273259 ..... 80, 88
273265 72
273304 ..... 82, 86, 90
273347 ..... 66, 72
273524 ..... 66, 72
273536 ..... 66, 74
274414 152
276029 278
276030 278
276033 308
276034 308
276043 328
276044 328
276057 328
276062 260
276117 260
276118 272
276140 272
276141 272
276149 280
276180 272
276183 274
276201 438
276206 270
276258 272
276259 334
276265 268
276281 328
276284 ..... 344, 348, 358, 362, 376, 388, 390, 400
276285 ..... 344, 348, 358, 362, 376, 388, 390, 400
276289 ..... 338, 416
276298 328
276326 334
276352 ..... 286, 290, 294, 410
276353 ..... 280, 410
276381 328
276560 308
276566 306
276567 314
276630 380
276631 444
276671 444
276679 280
276680 282
276759 370
276770 440
276806 380
276811 280
276812 280
276839 268
276859 ..... 286, 290, 294, 410
276863 328
276871 438
276899 448
276900 448
279001 ..... 222, 230, 236
279011 ..... 344, 348, 390, 418
279012 ..... 344, 348, 390, 418
279013 ..... 344, 348, 390
279014 390
279017 ..... 224, 232, 238
279034 ..... 344, 348, 390, 418
279035 ..... 344, 348, 390, 418
279065 156
279081 282
279085 114
279144 214
279156 212
279157 212
279158 212
279159 212
279228 ..... 376, 392
279261 ..... 182, 200
279284 64
279285 64
279286 64
279310 22
279312 22
279314 24
279316 24
279398 ..... 26, 34
279399 ..... 26, 34
279401 26
279402 26
279403 26
279404 26
279405 ..... 28, 30, 38, 40
279406 ..... 28, 30, 38, 40

INDEX

279408 28
279409 28
279410 28
279411 30
279412 34
279417 34
279418 34
279419 34
279420 34
279421 34
279422 34
279423 34
279424 34
279428 ..... 38, 40
279430 38
279431 38
279432 38
279433 38
279434 38
279435 38
279436 40
279437 40
279468 22
279485 212
279493 354
279494 212
279498 212
279499 212
279528 114
279575 ..... 18, 130, 168
279636 132
279641 ..... 22, 28, 30, 38, 40
279642 ..... 22, 26, 34
279689 280
279700 74
279718 390
279737 344
279746 ..... 414, 416, 418, 434
279775 ..... 190, 206
279797 10
279798 ..... 218, 222, 236
279832 10
279848 24
279850 22
279851 22
279876 132
279925 ..... 190, 206
279926 ..... 194, 210
279979 ..... 80, 84
279996 22
279997 22
279999 24
283002 ..... 182, 190, 200, 206
283215 380
283613 332
284635 114
284636 114
284666 126
284667 126
284668 122
284669 122
284670 124
284671 124
284672 120
284673 120
287031 436
287032 436
287193 320
287227 444
287272 308
287312 390
287344 376
287449 310
287450 310
287451 310
287456 376
287460 376
287461 376
287462 376
287465 376
287466 320
287467 320
287468 320
287469 320
287470 320
287471 320
287472 320
287473 320
287537 134
287587 252
287613 320
287701 324
287702 334
287705 334
287719 440
287749 444
287760 250
287768 256
287771 ..... 318, 320
287773 260
287774 260
287784 446
287797 ..... 444, 450
287814 302
287859 444
287860 390
287861 ..... 344, 348, 388, 390
287862 ..... 344, 348, 390
287863 ..... 344, 348, 390
287864 376

INDEX

287865 376
287866 376
287870 376
287878 344
287879 ..... 344, 348
287883 252
287885 252
287887 ..... 264, 406, 436
287888 ..... 264, 406, 436
287889 ..... 264, 340, 372, 406, 416, 436
287890 ..... 264, 340, 372, 406, 416, 436
287894 444
287907 314
287908 314
287909 314
287910 314
287911 314
287912 312
287913 312
287914 280
287939 256
287944 444
287945 444
287948 440
287949 440
291484 ..... 328, 432, 438
291485 ..... 328, 432, 438
293053 ..... 262, 440
293054 262
294007 ..... 182, 190, 200, 206
294009 ..... 182, 190, 202, 206
294036 160
294037 160
294057 10
294059 10
294060 10
294062 10
294063 114
294065 90
294068 98
294069 98
294080 106
294091 160
294094 160
294097 390
294098 344
294112 44
294121 ..... 102, 108
294221 ..... 182, 200
294222 ..... 182, 200
294223 ..... 182, 200
294224 ..... 190, 206
294225 ..... 190, 206
294226 ..... 182, 200
294263 ..... 182, 190, 200, 206
294350 426
294392 152
294393 ..... 214, 222, 230
294394 ..... 348, 418
294424 ..... 182, 190, 200, 206
294425 ..... 186, 194, 204, 210
294436 186
294437 186
294438 186
294460 18
294508 ..... 218, 222
294514 ..... 384, 386, 422
294515 190
294516 182
294517 182
294518 194
294519 182
294598 ..... 136, 144
294599 ..... 136, 144
294601 ..... 136, 144
294631 ..... 80, 84, 90
294634 ..... 80, 84, 90
294636 128
294651 128
294652 128
294653 128
294654 128
294655 128
294656 128
294657 128
294658 128
294659 128
294660 128
294661 128
294669 128
294671 2
294672 2
294673 2
294674 8
294675 8
294677 ..... 186, 194, 204, 210
294681 2
294682 ..... 182, 186, 190, 194
294791 38
294792 38
294793 38
294794 40
294795 28
294796 28
294797 30
294807 156
294813 114
294814 ..... 182, 190, 200, 206
294815 156
294832 ..... 288, 298, 300

INDEX

294833 ..... 286, 290, 298
294849 168
294858 58
294859 58
294890 286
294928 ..... 186, 194
294938 314
294947 ..... 22, 32, 42
294949 308
294985 ..... 218, 222
294995 ..... 224, 232
295013 370
295139 ..... 288, 298
295140 ..... 288, 300
295142 440
295143 440
295179 438
295211 256
295212 256
295213 256
295215 256
295216 256
295242 286
295261 260
295401 370
295542 260
295691 64
295710 382
295927 314
295981 248
295998 ..... 286, 290, 294, 408
296554 ..... 186, 204
296556 ..... 182, 202
300536 424
300978 424
301104 382
301126 260
301127 260
301185 424
301193 424
301200 424
301202 424
301369 120
301441 272
301451 ..... 342, 418
301495 126
301496 122
301497 124
301513 324
301629 ..... 374, 398
301663 280
301693 ..... 358, 366, 400, 404
301704 ..... 302, 424
301726 440
301763 426
301764 426
301765 426
301766 426
301805 278
301806 278
301807 278
301810 272
301865 438
301902 282
301912 272
301955 272
301992 272
301993 272
301994 272
301996 302
301997 304
302030 ..... 348, 418
302204 ..... 114, 334
304017 ..... 82, 84
304018 90
304019 94
304021 170
304031 64
304034 324
304035 324
304040 260
304083 118
304084 118
304090 10
304111 322
304114 118
304115 118
304116 118
304117 118
304118 118
304119 118
304122 118
304123 118
304140 118
304141 118
304142 118
304143 118
304144 118
304158 262
304159 262
304210 ..... 322, 424, 444, 450
304211 ..... 322, 424, 444, 450
304216 ..... 322, 444, 450
304221 96
304222 98
304254 444
304257 62
304258 62
304263 58
304307 10

INDEX

304314 98
304316 58
304317 58
304325 248
304370 444
304376 444
304377 444
304382 256
304385 110
304386 110
304387 110
304388 110
304454 252
304494 264
304514 270
304520 270
304521 272
304533 ..... 424, 434
304547 128
304548 128
304560 6
304561 6
304576 352
304611 246
304612 246
304614 246
304615 246
304616 246
304617 246
304618 246
304619 246
304620 246
304621 246
304622 246
304623 246
304624 246
304625 246
304668 308
304674 328
304748 252
304775 262
304779 262
304783 56
304786 262
304799 258
304800 410
304865 114
304916 10
304917 10
304918 10
304919 10
304920 10
304926 256
304927 256
304931 272
304954 ..... 66, 74
304955 ..... 66, 72, 74
304956 88
304982 ..... 424, 434
304985 142
304986 142
304987 142
304988 142
304989 142
304990 140
304991 140
304992 140
304993 140
308015 306
308056 274
308124 306
308133 272
308134 270
308187 272
308642 268
308850 270
308859 274
308871 264
311466 ..... 286, 300
311491 310
311524 66
311615 ..... 66, 74
311617 ..... 66, 72
311620 88
311707 ..... 352, 418
311750 310
311859 ..... 8, 324
312706 248
312824 442
312908 334
313873 112
313875 112
314306 ..... 302, 418
314307 424
314627 424
314653 304
314656 302
314657 302
314658 304
314678 ..... 342, 418
314684 424
320031 60
320116 ..... 290, 294
320237 276
320284 ..... 376, 392
320360 314
320397 248
320414 290
320415 290
320417 294

INDEX

320438 294
322113 424
322145 324
322198 304
322199 304
322202 304
322203 304
322205 304
322207 304
322208 304
322209 304
322210 304
322211 304
322212 304
322234 304
322257 304
322258 304
322259 304
322692 362
322695 362
322739 362
322742 362
322744 362
322748 368
322751 362
322752 362
322783 356
322862 356
326024 186
326025 182
326072 110
326075 48
326078 48
326086 ..... 182, 200
326093 102
326096 102
326097 98
326100 102
326152 128
326153 128
326165 56
326166 56
326180 ..... 186, 204
326181 98
326192 98
326207 66
326208 66
326217 286
326218 ..... 286, 290
326222 294
326231 ..... 298, 316
326237 294
326240 314
326242 314
326243 314
326286 290
326292 290
326293 292
326294 292
326296 294
326297 296
326298 296
326299 298
326300 300
328356 ..... 374, 398
328372 356
328381 356
328500 274
328582 ..... 374, 398
335008 ..... 348, 418
335059 ..... 348, 418
335171 252
335173 252
335242 ..... 264, 268, 270
335244 264
335245 264
335270 356
335286 250
335326 22
335336 200
335337 204
335341 376
335342 392
335354 274
335446 286
335447 286
335464 430
335478 200
335480 204
335484 34
335485 34
335486 34
335487 34
335489 26
335490 26
335491 26
335492 26
335509 42
335510 42
335511 42
335512 42
335513 32
335514 32
335515 32
335516 32
335519 42
335521 42
335522 42
335523 42
335526 42

335527 42
335528 42
335529 42
335530 32
335531 32
335532 42
335533 ..... 32, 42
335534 ..... 32, 42
335535 32
335536 32
335589 ..... 186, 194, 198
335592 ..... 204, 210
335598 210
335600 206
335608 112
335610 198
335615 ..... 198, 204, 210
335622 198
335625 ..... 198, 204, 210
335637 252
335638 8
335686 204
335687 204
335695 450
335707 200
335708 200
335719 ..... 200, 206
335743 324
335752 2
335759 ..... 226, 230
335760 ..... 226, 230
335779 ..... 226, 230
335784 ..... 226, 230
335785 ..... 226, 230
335810 ..... 226, 230
335864 226
335866 230
335867 ..... 226, 230
335869 ..... 218, 222
337043 ..... 374, 398
337143 ..... 264, 268, 372, 406, 414, 418, 422
337152 ..... 264, 268, 372, 406, 414, 418, 422
337163 388
337168 394
337173 388
337174 388
337175 388
337177 388
337178 388
337206 268
337311 ..... 374, 398
337941 338
337943 338
337980 ..... 348, 418
339588 294
347077 ..... 374, 398
347301 ..... 386, 422
347339 252
347487 252
347565 252
347569 ..... 374, 398
347691 256
347692 256
357233 406
357234 406

B

B4831 138
B4963 112
B5084 148
B5085 148
B5224 158
B5605 150
B5609 146
B5615 112
B5657 70
B5674 70
B5825 180
B5826 180
B5938 70
B6042 448
B6043 448
B6044 448
B6045 448
B6046 448
B6057 442
B6137 236
B6138 236
B6145 156
B6158 150
B6179 166
B6191 410
B6192 410
B6193 408
B6194 408
B6195 412
B6211 438
B6212 134
B6213 448
B6247 244
B6248 244
B6249 244
B6250 244
B6265 242
B6344 70
B6345 70
B6347 70
B6376 132
B6400 436

B6410..... 218, 222, 226, 230
B6411..... 130
B6421..... 370
B6449..... 158
B6450..... 260
B6458..... 258
B6568..... 424
B6590..... 136
B6591..... 144
B6595..... 302
B6596..... 302
B6600..... 270
B6606..... 152
B6607..... 152
B6634..... 170
B6677..... 18, 20, 168
B6678..... 18, 20, 168
B6679..... 18, 20, 168
B6680..... 18, 20, 168
B6701..... 444
B6702..... 444
B6703..... 444
B6849..... 356
B6881..... 414
B6882..... 418
B6886..... 372
B6887..... 422
B6890..... 98
B6957..... 422
B6958..... 416
B6959..... 354
B6960..... 374
B6961..... 398
B6962..... 386
B6963..... 386
B6964..... 338
B6965..... 336
B6966..... 342
B6981..... 66
B6982..... 168
B7269..... 172
B7273..... 176
B7282..... 178
B7283..... 178
B7284..... 178
B7285..... 178
B7343..... 406
B7344..... 406
B7345..... 406
B9009..... 200
B9010..... 200
B9011..... 200
B9012..... 200
B9030..... 384
B9044..... 200
B9045..... 200
B9046..... 200
B9047..... 200
B9048..... 226
B9049..... 206
B9050..... 206
B9051..... 230
B9053..... 112

C

C1986..... 164
C2082..... 172
C2083..... 172
C2084..... 172
C2085..... 172

MacDon

CUSTOMERS
MacDon.com

DEALERS
Portal.MacDon.com

Trademarks of products are the marks of their respective manufacturers and/or distributors.

Printed in Canada