MacDon

D1 Series
Draper Header for Combines with FM100 Float Module

Parts Catalog

215746 Revision B

Original Instruction

The Harvesting Specialists.

D1 Series Draper Header for Combines and FM100 Float Module

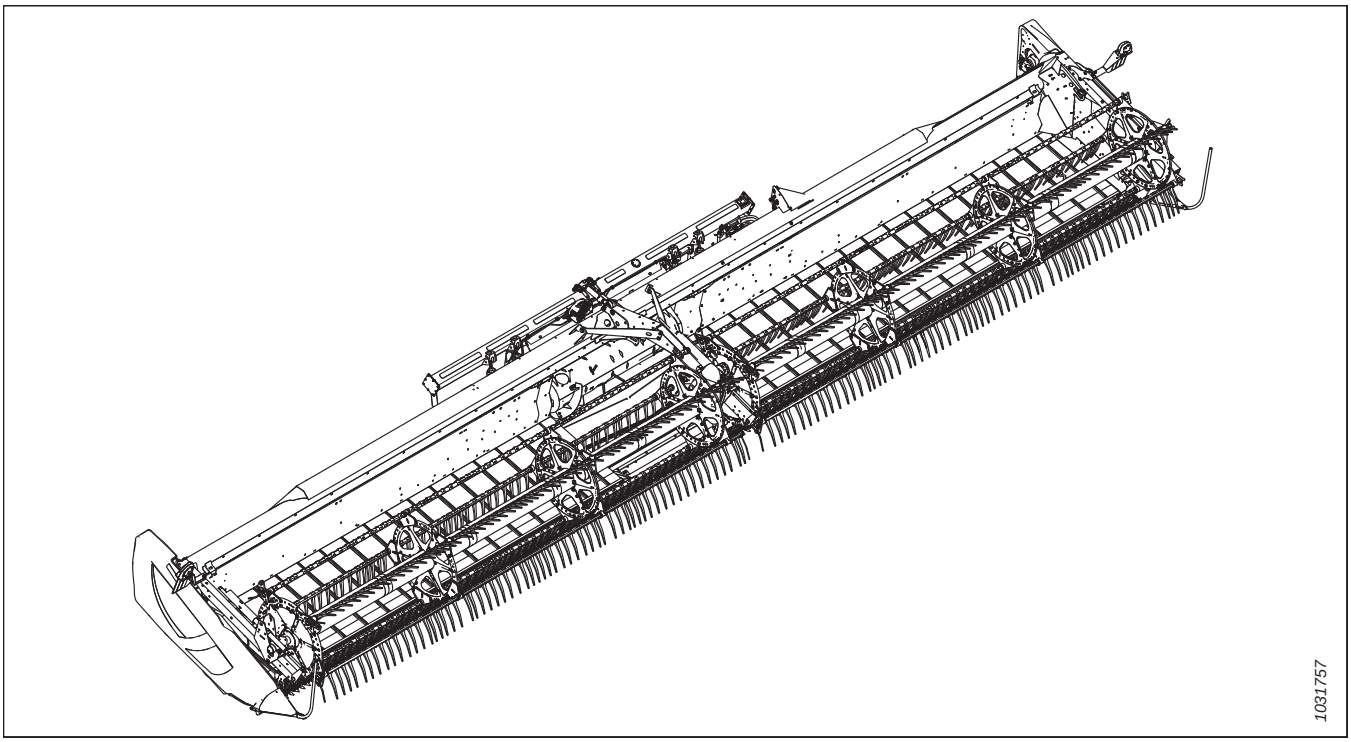

Published: February 2022

NOTE:

Keep your MacDon publications up-to-date. The most current version can be downloaded from our website (*www.macdon.com*) or from our Dealer-only site (*https://portal.macdon.com*) (login required).

This document is available in English, French, Portuguese, Russian, and Spanish versions. The most current version can be downloaded from our MacDon International website (*www.macdon.com/world*) or from our Dealer-only site (*https://portal.macdon.com*) (login required).

© 2022 MacDon Industries, Ltd.

The information in this publication is based on the information available and in effect at the time of printing. MacDon Industries, Ltd. makes no representation or warranty of any kind, whether expressed or implied, with respect to the information in this publication. MacDon Industries, Ltd. reserves the right to make changes at any time without notice.

Introduction

This Parts Catalog lists all the replacement parts that can be ordered for a MacDon D1 Series Combine Draper Header and a FM100 Float Module. Chapters *1 Header Frame – Dividers and Stand, page 1* to *90 (Option) Vertical Knife Assembly – Service Parts, page 281* list replacement parts for a D1 Series Combine Draper Header, and chapters *91 Float Module Frame and Components, page 283* to *170 (Option) Tilt Harness Kit, page 487* list replacement parts for a FM100 Float Module.

When ordering, be sure the complete and proper part number is given. Some parts vary with header size; be sure you are ordering the correct part number for your unit.

Bold text is used to indicate updates made at the current revision level. With each new revision of the catalog, previous revisions are returned to regular text.

Electrical connectors used on MacDon products are available for sale but not listed in this catalog. For the list of available connectors, refer to the Electrical Connectors Parts Catalog (MD #169641).

In this catalog, right and left are determined from the operator's seated position in the combine. An arrow is sometimes used in illustrations to indicate forward position.

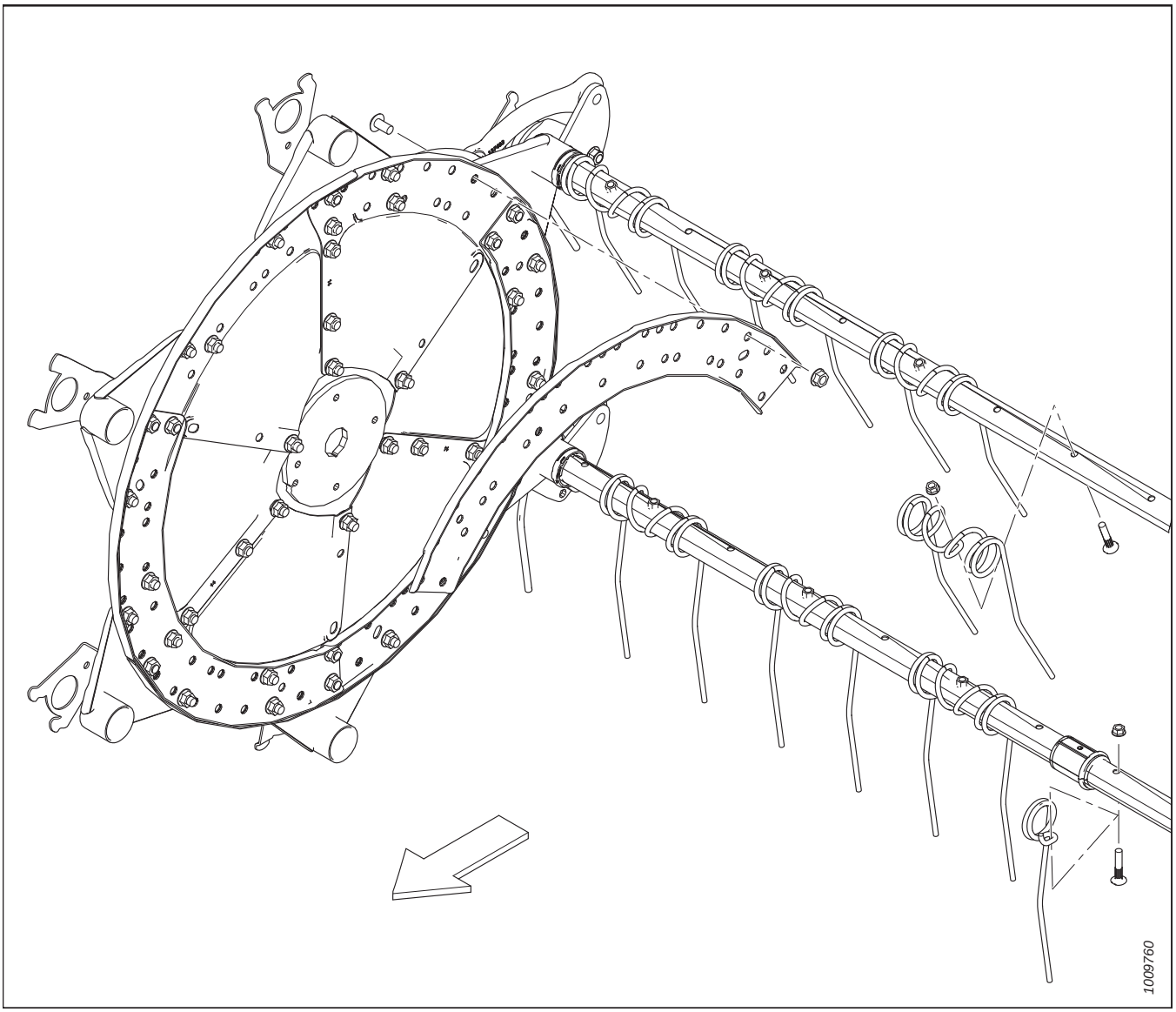

Abbreviations

A/R – as required (quantity varies)	ASSY – assembly	BHRN – button head rib neck
BV – ball valve	CCW – counterclockwise	CON – conical (spring washer)
CSK – countersink	C/W – complete with	CW – clockwise
DBLE – double	DK – double knife	DR – double reel
DT – distorted thread	FLG – flange	GA – gauge
GR – grade	GS – grass seed	HD – head
HDR – header	HFA – hydraulic fore-aft	HH – hex head
HNBR – hydrogenated nitrile butadiene rubber	HYD – hydraulic	I.D. – inside diameter
IP – internal plus (torx plus)	KP – knife pressure	KR – knife return
LG – long	LH – left hand (determined from Operator's position, facing forward)	LK – lock
MACH – machine	MD – MacDon	MFA – manual fore-aft
MY – model year	NC – national coarse thread	NF – national fine thread
NSS – not sold separately	NT – narrow transport	O.D. – outside diameter
OPT – optional	PO – pilot operated	PT – pull-type (mower conditioner)
RC – roller chain	REF – reference, part number called up elsewhere in catalog	REG – regular
RH – right hand (determined from Operator's position, facing forward)	RHSN – round head, square neck or square neck carriage bolt	RHSSN – round head, short, square neck
RTD – rotating tine drum	SAE – Society of Automotive Engineers (part produced to comply with)	SD – side draper
SER – serrated	SK – single knife	SKT HD – socket head
SMTH – smooth	SMV – slow moving vehicle	SOCK – socket
SP – self-propelled (windrower) header	SPCL – special	SPH – spherical
SPI – serrations per inch (knife Sections)	SR – single reel	STL – steel (stainless)
STR – standard	STVR – Stover	TFL – thread full length
THD – thread	TR – triple reel	UCA – upper cross auger
UDK – untimed double knife	UNC – unified coarse thread	UNEF – unified extra fine thread
UNF – unified fine thread	UNS – unified special thread series	VK – veritcal knife
WF – wide frame	ZP – zinc plated	

Serial Number Breaks

The side of the serial number on which the dash (–) appears determines whether the part is used "up to" or "after" the serial number given.

Example:

- –162249 Used on machines up to and including serial number 166249
- 166250– Used on machines including and after serial number 166250

Summary of Changes – D1 Series (215746 Rev. B)

This list covers changes made since the last revision (215746 Rev. A).

Section	Summary of Change	Internal Use Only
1 Header Frame – Dividers and Stand, page 1	Changed description of kit 335752 from “bar guard” to “support bracket”.	Parts
	Added cutterbar connection supports 125418 and 253552 and bolts 103562 for split-frame headers. Removed bolts 117015, which get removed from the frame prior to shipping. Updated illustration from 1037275 to 1038262.	Product Support
27 Pick-Up Reel – Double-Reel Headers (D130, D135, D140, and D145), page 87	Revised note to include 4-inch finger spacing tine tube dimensions.	Product Support
68 (Option) Sunflower Attachment – Base Kit, page 203	Support 119264 superseded by 119747. Bracket 119265 superseded by 119729. Added support 119728. Quick-attach pan 119506 superseded by 119722. Added illustration 1038248.	ECN 62619 ECN 62575
69 (Option) Sunflower Attachment – Pans, page 207	Quick-attach pan 119506 superseded by 119722. Added illustration 1037082.	ECN 62575
70 (Option) Sunflower Attachment – Deflectors, page 209	Added illustration 1037083.	Publications
73 (Option) Upper Cross Auger – Left End (D130, D135, and D140) – 2021 and Prior, page 217	Removed superseded UCA bundles B6462, B6463, B6464, B6585, B6586, B6587, B6872, and B6873. Added “2021 and Prior” to the title.	ECN 61273
74 (Option) Upper Cross Auger – Right End (D130, D135, and D140) – 2021 and Prior, page 221	Added “2021 and Prior” to the title.	ECN 61273
	Added UCA Center Support Repair kit 335589. Updated illustration from 1030056 to 1038238.	ECN 61410
75 (Option) Upper Cross Auger – Left End (D145) – 2021 and Prior, page 225	Removed superseded UCA bundles B6465 and B6588. Added “2021 and Prior” to the title.	ECN 61273
76 (Option) Upper Cross Auger – Right End (D145) – 2021 and Prior, page 229	Added “2021 and Prior” to the title.	ECN 61273
	Added UCA Center Support Repair kit 335589. Updated illustration from 1024833 to 1038243.	ECN 61410
78 (Option) Upper Cross Auger – Left End (D130, D135, and D140) – 2022, page 235	Added new section to catalog for UCA bundles B9009, B9010, B9011, B9045, B9046, and B9047, with new illustration 1038235.	ECN 61273
79 (Option) Upper Cross Auger – Right End (D130, D135, and D140) – 2022, page 239	Added new section to catalog for UCA bundles B9009, B9010, B9011, B9045, B9046, and B9047, with new illustration 1038227.	ECN 61273
80 (Option) Upper Cross Auger – Left End (D145) – 2022, page 241	Added new section to catalog for UCA bundles B9049 and B9050, with new illustration 1038237.	ECN 61273

Section	Summary of Change	Internal Use Only
81 (Option) Upper Cross Auger – Right End (D145) – 2022, page 245	Added new section to catalog for UCA bundles B9049 and B9050, with new illustration 1038231.	ECN 61273
83 (Option) Vertical Knife – Standard Reel Arm, Left End (2019–2021), page 253	Removed reference to B6608, which has been superseded by B9048. LH support assembly 294721 is superseded by service kit 335869, which upgrades both LH and RH supports to the new design.	ECN 62429
84 (Option) Vertical Knife – Standard Reel Arm, Right End (2019–2021), page 257	Corrected right lifter weldment part number from 253706 to 253709.	Parts
	Removed reference to B6609, which has been superseded by B9051. RH support assembly 294722 is superseded by service kit 335869, which upgrades both LH and RH supports to the new design.	ECN 62429
85 (Option) Vertical Knife – Standard Reel Arm, Left End (2022), page 261	Added section to catalog for new vertical knife bundle B9048, with new illustration 1038357.	ECN 62429
86 (Option) Vertical Knife – Standard Reel Arm, Right End (2022), page 265	Added section to catalog for new vertical knife bundle B9051, with new illustration 1038358.	ECN 62429
104 Drives, page 317	Removed hardware securing the pump assembly to the output shaft. This hardware is now listed in separate pump assembly topics for Bosch, Parker, and Eaton. Added references to Parker and Eaton pump assemblies. Updated illustration from 1023841 to 1038212.	ECN 62594 ECN 62656
105 Pump Assemblies – Identifying Pump, page 321	Added section to catalog with new illustration 1038329.	Engineering
106 Pump Assembly – Bosch/ Rexroth, page 323	Added “Bosch/Rexroth” to title. Added note that references Parker and Eaton pump assemblies. Added hardware used to secure the pump to the output shaft. Updated illustration from 1027535 to 1038211.	ECN 62594
107 Pump Assembly – Parker Hannifin (2022 Only), page 327	Added section to catalog with new illustration 1038040.	ECN 62594 ECN 62656
108 Pump Assembly – Eaton (2022 Only), page 331	Added section to catalog with new illustration 1038046.	ECN 62594 ECN 62656
109 Knife Drive Pump Service Kit, page 335	Added section to catalog with new illustration 1038353.	Engineering
110 Draper Drive Pump Service Kit, page 337	Added section to catalog with new illustration 1038342.	Engineering
111 Input Driveline and Support, page 339	Revised various footnotes to clarify the compatible combines.	Engineering
115 Hydraulics – Drives and Header Connection, page 351	Filter element 202986 changed to service code 5, and is now serviced with filter 320360, which comes with two seals.	ECN 61432
	Hoses 213173, 213862, and 213861 superseded by 326240, 326242, and 326243. Added 8 inch strap 295927.	ECN 62656
	Added bracket 326231 and clamp 136110 for Parker configurations. Added fitting 135777, which replaces elbow fitting 136337 on Bosch configurations. Updated illustration from 1024672 to 1038256.	ECN 62734

Section	Summary of Change	Internal Use Only
123 AGCO Challenger/Massey Ferguson – Float Module Completion, page 373	Completion package B6676 superseded by B6965.	ECN 60225
124 AGCO Gleaner – Float Module Completion, page 375	Completion package B6675 superseded by B6964.	ECN 60225
128 AGCO IDEAL™ – Hydraulic Completion, page 385	Completion package B6668 superseded by B6966.	ECN 60225
130 Case IH and New Holland CR/CX – Float Module Completion, page 391	Completion package B6182 superseded by B6959.	ECN 60225
138 CLAAS Lexion 500/700 Series – Float Module Completion, page 411	Completion package B6186 superseded by B6960.	ECN 60225
	Updated CLAAS completion package to include FM200 transition frame, which was designed to be reverse compatible with FM100: Transition frame 304788 replaced by 347077, lever 156784 replaced by 328582, pivot 304669 replaced by 347569, latch 304980 replaced b 337311, pins 19809 and 13125 replaced by lynch pin 113561, bushing 156780 replaced by 337043. Added covers 328356 and 301629. Updated hardware. Updated illustration from 1026492 to 1038090.	ECN 62359
142 John Deere 50 Series – Float Module Completion, page 421	Replaced B6879 with B9030 to be consistent with the FM100 Product Sheet.	ECN 60672
143 John Deere 60/70 S/T Series – Float Module Completion, page 423	Contour master frame 294051 superseded by 347301.	ECN 62291
	Completion package B6650 and B6651 superseded by B6962 and B6963.	ECN 60225
148 Versatile – Float Module Completion, page 435	Completion package B6479 superseded by B6961.	ECN 60225
	Updated Versatile completion package to include FM200 transition frame, which was designed to be reverse compatible with FM100: Transition frame 304788 replaced by 347077, lever 156784 replaced by 328582, pivot 304669 replaced by 347569, latch 304980 replaced b 337311, pins 19809 and 13125 replaced by lynch pin 113561, bushing 156780 replaced by 337043. Added covers 328356 and 301629. Updated hardware. Updated illustration from 1026493 to 1038100.	ECN 62359
151 Auger Conversion Kits – Fingers and Flighting, page 443	Replaced bundles B6884 and B6885 with B7343, B7344, and B7345. Updated illustration from 1033427 to 1038360.	ECN 62443
161 John Deere Conversion Kits, page 465	Contour master frame 294051 superseded by 347301.	ECN 62291
167 (Option) Hillside Extension, page 479	Added fill extension kit 312824, which contains the contents of B6057.	ECN 60873
	Replaced screw 135873 with 320397.	ECN 62415

Introduction i
Abbreviations ii
Serial Number Breaks iii
Summary of Changes – D1 Series (215746 Rev. B) iv

1 Header Frame – Dividers and Stand 1
2 Header Frame – Endshields 5
3 Guards, Hold-Downs, and Wearplates – Single Knife, Stub Guards 7
4 Guards, Hold-Downs, and Wearplates – Single Knife, Pointed and Pointed with End Stubs 9
5 Guards, Hold-Downs, and Wearplates – Double Knife, Right End 13
6 Guards, Hold-Downs, and Wearplates – Double Knife, Middle and Left End 17
7 Knife Components and Knifehead 21
8 Segmented Knives – Single-Knife Headers, Fine-Tooth Sections 25
9 Segmented Knives – Single-Knife Headers, Coarse-Tooth Sections 29
10 Segmented Knives – Single-Knife Headers, Ultra Coarse-Tooth Sections 33
11 Segmented Knives – Double-Knife Headers, Fine-Tooth Sections 35
12 Segmented Knives – Double-Knife Headers, Coarse-Tooth Sections 39
13 Segmented Knives – Double-Knife Headers, Ultra Coarse-Tooth Sections 43
14 Knife Drive – Single-Knife and Untimed Double-Knife Headers 47
15 Knife Drive – Timed Double-Knife Headers 51
16 Knife Drive Box 57
17 Knife Drive Hydraulics – Single-Knife (D120, D130, D135, and D140) 59
18 Knife Drive Hydraulics – Single-Knife (D125, D130, and D135) 61
19 Knife Drive Hydraulics – Timed Double-Knife (D120) 63
20 Knife Drive Hydraulics – Timed Double-Knife (D125, D130, and D135) 65
21 Knife Drive Hydraulics – Untimed Double-Knife (D140 and D145) 67
22 Draper Carrier Deck and Tensioner 69
23 Draper Deflectors – Combine 75
24 Draper Backsheet Deflectors 77
25 Draper Drive – Manual Deck Shift 79
26 Pick-Up Reel – Single-Reel Headers (D120, D125, D130, and D135) 81
27 Pick-Up Reel – Double-Reel Headers (D130, D135, D140, and D145) 87
28 Reel Endshield Components 95
29 Reel Components – Single Reel, Right Arm 97
30 Reel Components – Double Reel, Right Arm 103
31 Reel Components – Double Reel, Center Arm 107
32 Reel Components – Single/Double Reel, Left Arm 113
33 Reel Support Arms and Lift Cylinders 115
34 Reel Drive Hydraulics – Lift and Fore-Aft – Single Reel (D120, D125, D130, and D135) 119
35 Reel Drive Hydraulics – Lift and Fore-Aft – Double Reel (D130, D135, D140, and D145) 123
36 Electrical Components 127
37 Reel Height Sensor 131
38 Skid Shoes – End and Center 133
39 Decals and Reflectors 135

40 Decals – Product Identification 139
41 Decals – French 141
42 Decals – Portuguese 143
43 Decals – Russian 145
44 Decals – Spanish 147
45 Paint 149
46 (Option) Combine Header Coupler Kit 151
47 (Option) Crop Lifters 153
48 (Option) Crop Lifter Rack 155
49 (Option) Double Draper Drive 157
50 (Option) Draper Extension Kit 161
51 (Option) Foot Switch 163
52 (Option) Multi-Crop Rapid Reel Conversion Kit 165
53 (Option) Pick-up Reel-End Fingers Kit 167
54 (Option) Pointed Guard Kit, Single Knife 169
55 (Option) Pointed Guard Kit, Double Knife 171
56 (Option) Reel Arm Extension Kit 173
57 (Option) Rice Divider Rods 175
58 (Option) Rock Retarder Kit 177
59 (Option) Short Brace Kit for Center Reel Arm / Divider Latches 179
60 (Option) Short Brace Kit for Short Reel Arms – Single Reel 181
61 (Option) Slow Speed Transport Package – Hitch Electrical 183
62 (Option) Slow Speed Transport Package – Transport Hitch 187
63 (Option) Slow Speed Transport Package – Wheels and Supports 189
64 (Option) Stabilizer Wheels 195
65 (Option) Stabilizer Wheels – Secondary 197
66 (Option) Stub Guard Conversion Kit 199
67 (Option) Stubble Lights 201
68 (Option) Sunflower Attachment – Base Kit 203
69 (Option) Sunflower Attachment – Pans 207
70 (Option) Sunflower Attachment – Deflectors 209
71 (Option) Tine Tube Reinforcing Kit 211
72 (Option) Upper Cross Auger (D125) 213
73 (Option) Upper Cross Auger – Left End (D130, D135, and D140) – 2021 and Prior 217
74 (Option) Upper Cross Auger – Right End (D130, D135, and D140) – 2021 and Prior 221
75 (Option) Upper Cross Auger – Left End (D145) – 2021 and Prior 225
76 (Option) Upper Cross Auger – Right End (D145) – 2021 and Prior 229
77 (Option) Upper Cross Auger – Center Support Repair Kit 233
78 (Option) Upper Cross Auger – Left End (D130, D135, and D140) – 2022 235
79 (Option) Upper Cross Auger – Right End (D130, D135, and D140) – 2022 239
80 (Option) Upper Cross Auger – Left End (D145) – 2022 241
81 (Option) Upper Cross Auger – Right End (D145) – 2022 245
82 (Option) Vertical Knife – Standard Reel Arm (2018 and Prior) 247

83 (Option) Vertical Knife – Standard Reel Arm, Left End (2019–2021) 253
84 (Option) Vertical Knife – Standard Reel Arm, Right End (2019–2021) 257
85 (Option) Vertical Knife – Standard Reel Arm, Left End (2022) 261
86 (Option) Vertical Knife – Standard Reel Arm, Right End (2022) 265
87 (Option) Vertical Knife – Short Reel Arms 271
88 (Option) Vertical Knife Hose Kits – Standard and Short Reel Arms, Single Reel 277
89 (Option) Vertical Knife Hose Kits – Standard and Short Reel Arms, Double Reel 279
90 (Option) Vertical Knife Assembly – Service Parts 281
91 Float Module Frame and Components 283
92 Feed Deck – Frame, Front Links, and Pivot Pins 285
93 Feed Deck – Draper Drive and Rollers 287
94 Feed Deck – Pans and Fillers 291
95 Float Module – Transition Pan 293
96 Float Module – Attaching Parts 295
97 Float Module – Center and Corner Fillers 297
98 Float Module – Side Fillers 299
99 Auger Assembly and Completion 301
100 Auger Assembly and Completion – Configuration 303
101 Auger Internal Components 305
102 Auger Assembly – Service Parts 307
103 Auger Float Linkage 315
104 Drives 317
105 Pump Assemblies – Identifying Pump 321
106 Pump Assembly – Bosch/Rexroth 323
107 Pump Assembly – Parker Hannifin (2022 Only) 327
108 Pump Assembly – Eaton (2022 Only) 331
109 Knife Drive Pump Service Kit 335
110 Draper Drive Pump Service Kit 337
111 Input Driveline and Support 339
112 Hydraulics – Frame Components 345
113 Hydraulics – Center-Link and Header Tilt / Reel Fore-Aft 347
114 Hydraulics – Feed Deck 349
115 Hydraulics – Drives and Header Connection 351
116 Hydraulics – Drive Manifold Assembly 355
117 Drive Manifold Assembly – Service Parts 357
118 Selector Valve 359
119 Float Linkage and Components 361
120 Float Indicator and Auto Header Height Control 365
121 Electrical Components – FM100 369
122 Decals – FM100 371
123 AGCO Challenger/Massey Ferguson – Float Module Completion 373
124 AGCO Gleaner – Float Module Completion 375
125 AGCO Gleaner – Feed Auger Conversion Parts 377

126 AGCO IDEAL™ – Float Module Completion 379
127 AGCO Challenger/Massey Ferguson and Gleaner – Hydraulic Completion 381
128 AGCO IDEAL™ – Hydraulic Completion 385
129 AGCO – Electrical Completion 389
130 Case IH and New Holland CR/CX – Float Module Completion 391
131 Case IH 2300/2500 Series – Float Module Completion 393
132 Case IH and New Holland CR/CX – Hydraulic Completion 395
133 Case IH 2300/2500 Series – Hydraulic Completion 399
134 Case IH and New Holland CR/CX – Electrical Completion 403
135 Case IH 2300/2500 Series – Electrical Completion 405
136 New Holland 10 Volt Auto Header Height Control Converter Kit 407
137 New Holland CR Fillers Conversion Kit 409
138 CLAAS Lexion 500/700 Series – Float Module Completion 411
139 CLAAS Lexion 500/700 Series – Hydraulic Completion 413
140 CLAAS Lexion 500/700 Series – Electrical Completion 417
141 CLAAS Reel Height Resistor Kit 419
142 John Deere 50 Series – Float Module Completion 421
143 John Deere 60/70 S/T Series – Float Module Completion 423
144 John Deere 50 Series – Hydraulic Completion 425
145 John Deere 60/70 S/T Series – Hydraulic Completion 427
146 John Deere 50 Series – Electrical Completion 431
147 John Deere 60/70 S/T Series – Electrical Completion 433
148 Versatile – Float Module Completion 435
149 Versatile – Hydraulic Completion 437
150 Versatile – Electrical Completion 441
151 Auger Conversion Kits – Fingers and Flighting 443
152 FM100 on D65 Conversion Kit 445
153 Gear Pump Conversion Kits 447
154 Gear Set Conversion Kits 449
155 Sprocket and Chain Conversion Kit 451
156 AGCO Challenger/Massey Ferguson Conversion Kit 453
157 AGCO Gleaner Conversion Kit 455
158 AGCO IDEAL™ Conversion Kit 457
159 Auger Dent Repair Kit 461
160 Auger Patch Kit 463
161 John Deere Conversion Kits 465
162 Rostselmash Conversion Kit 467
163 Reel Speed Sensors 471
164 (Option) Auger Flighting Kits 473
165 (Option) Dual Sensor Auto Header Height Control 475
166 (Option) FM100 Full Interface Filler – D1 477
167 (Option) Hillside Extension 479
168 (Option) In-Cab Side Draper Speed Control Kits 481

169 (Option) Stripper Bars 485
170 (Option) Tilt Harness Kit 487
Index 490

1 Header Frame – Dividers and Stand

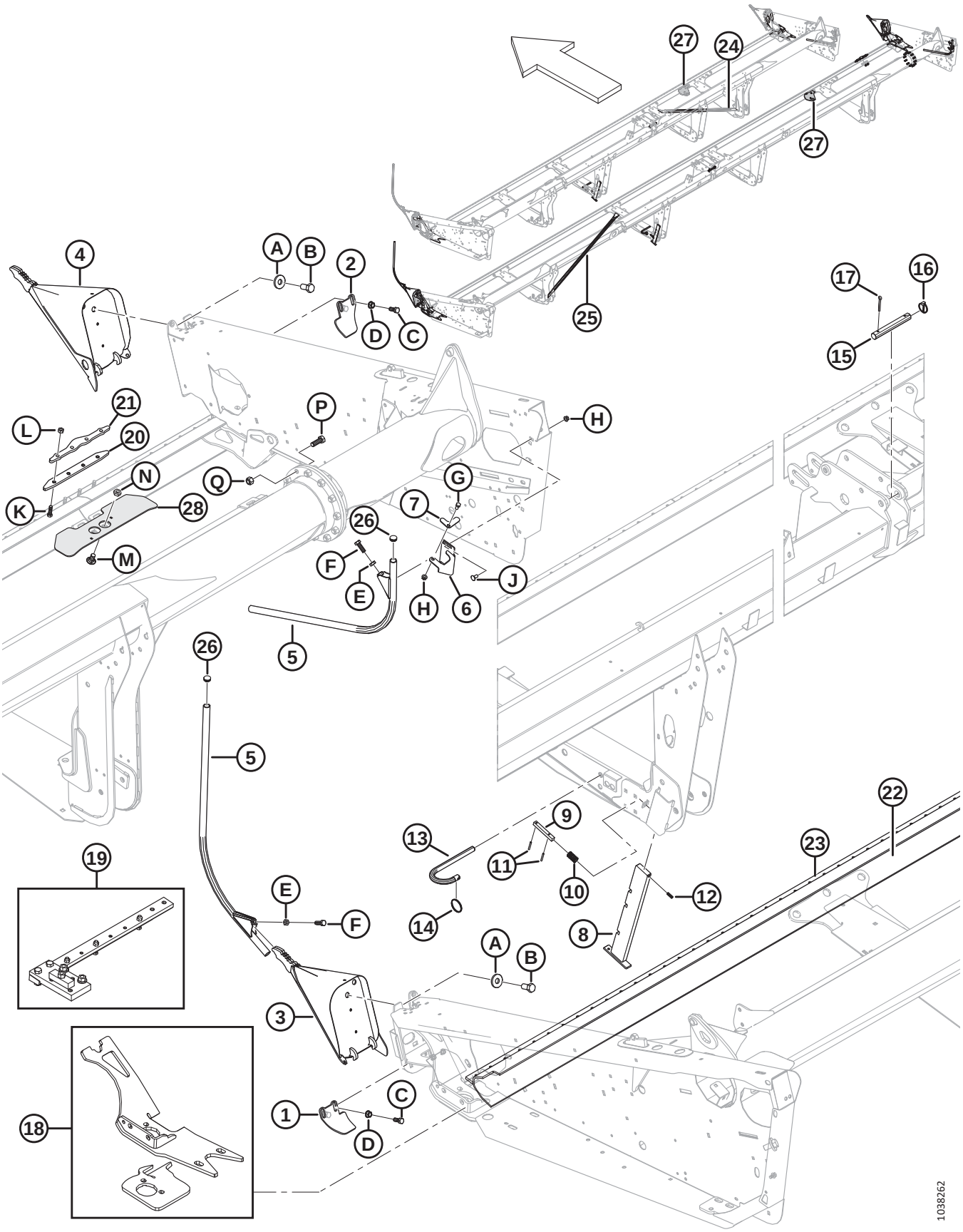

HEADER FRAME – DIVIDERS AND STAND

Ref	Part Number	Description	Qty	Serial Number
1	245678	SHIELD – LH, GUARD	1	
2	245677	SHIELD – RH, GUARD	1	
3	123660	DIVIDER – WELDT (LH)	1	
4	123661	DIVIDER – WELDT (RH)	1	
5	120127	DIVIDER – TUBE WELDT [1]	2	
6	253499	BRACKET – DIVIDER ROD STORAGE	1	
7	132420	TAB-LOCK – DIVIDER ROD STORAGE	1	
8	132266	STAND – WELDT	1	
9	132269	PIN – TWO HOLES, 12.7 MM SQUARE, 100 MM LG	1	
10	132265	SPRING – COMPRESSION	1	
11	7642	PIN – SPRING 3/16 DIA X 1.5 LG	2	
12	16087	PIN – SPRING 5/16 DIA X 1.0 LG	1	
13	124399	PIN	2	
14	118137	RING – Ø50.8 MM	2	
15	133751	PIN – STRAIGHT, TWO HOLES, 147 MM (30-35 DK SINGLE REEL)	1	
	125363	PIN – STRAIGHT, TWO HOLES, 185 MM (35-45 DK/UDK DOUBLE REEL)	1	
16	102264	PIN – LYNCH 3/16 X 1 9/16 IN	1	
17	18609	PIN – COTTER 1/4 DIA X 2 ZP	1	
18	123751	KIT – LH WOBBLE BOX MOUNT	1	
	123752	KIT – RH WOBBLE BOX MOUNT	1	
19	174400	JIG ASSY – WOBBLE BOX MOUNT, 20-25 FT [2]	A/R	
	174391	JIG ASSY – WOBBLE BOX MOUNT, 30-45 FT [2]	A/R	
20	258150	BAR – CUTTERBAR SPLICE (SPLIT FRAME ONLY)	1	
21	255442	BAR – CUTTERBAR SPLICE (SPLIT FRAME ONLY)	1	
22	294671	KIT – CUTTERBAR REPAIR PIECE, 1300 MM [3]	A/R	
	294681	KIT – CUTTERBAR REPAIR PIECE, 4491 MM [3]	A/R	
23	294672	KIT – GUARD BAR, 1530 MM	A/R	
24	294650	KIT – TUBE WELDT BRACE, 30 FT, RH [4]	OPT	
	294664	KIT – TUBE WELDT BRACE, 35 FT, RH [4]	OPT	
25	294662	KIT – TUBE WELDT BRACE, 40 AND 45 FT, RH [4]	OPT	
	294663	KIT – TUBE WELDT BRACE, 40 AND 45 FT, LH [4]	OPT	
26	335301	PLUG – PLASTIC, SNAP-IN [5]	4	
27	335752	**KIT – SUPPORT BRACKET** [6]	A/R	

1. Standard divider rod shown. For rice divider rods, refer to Section *57 (Option) Rice Divider Rods, page 175*.
2. Required to properly install wobble box mount (MD #123751 or 123752), comes complete with instructions. See your MacDon Dealer for more information.
3. 30–45 ft. only.
4. Optional brace kit is used to repair diagonal brace underneath header frame.
5. Inserted on each end of divider rod (MD #120127).
6. Kit used to replace worn out or broken support bracket. Welding is required.

HEADER FRAME – DIVIDERS AND STAND

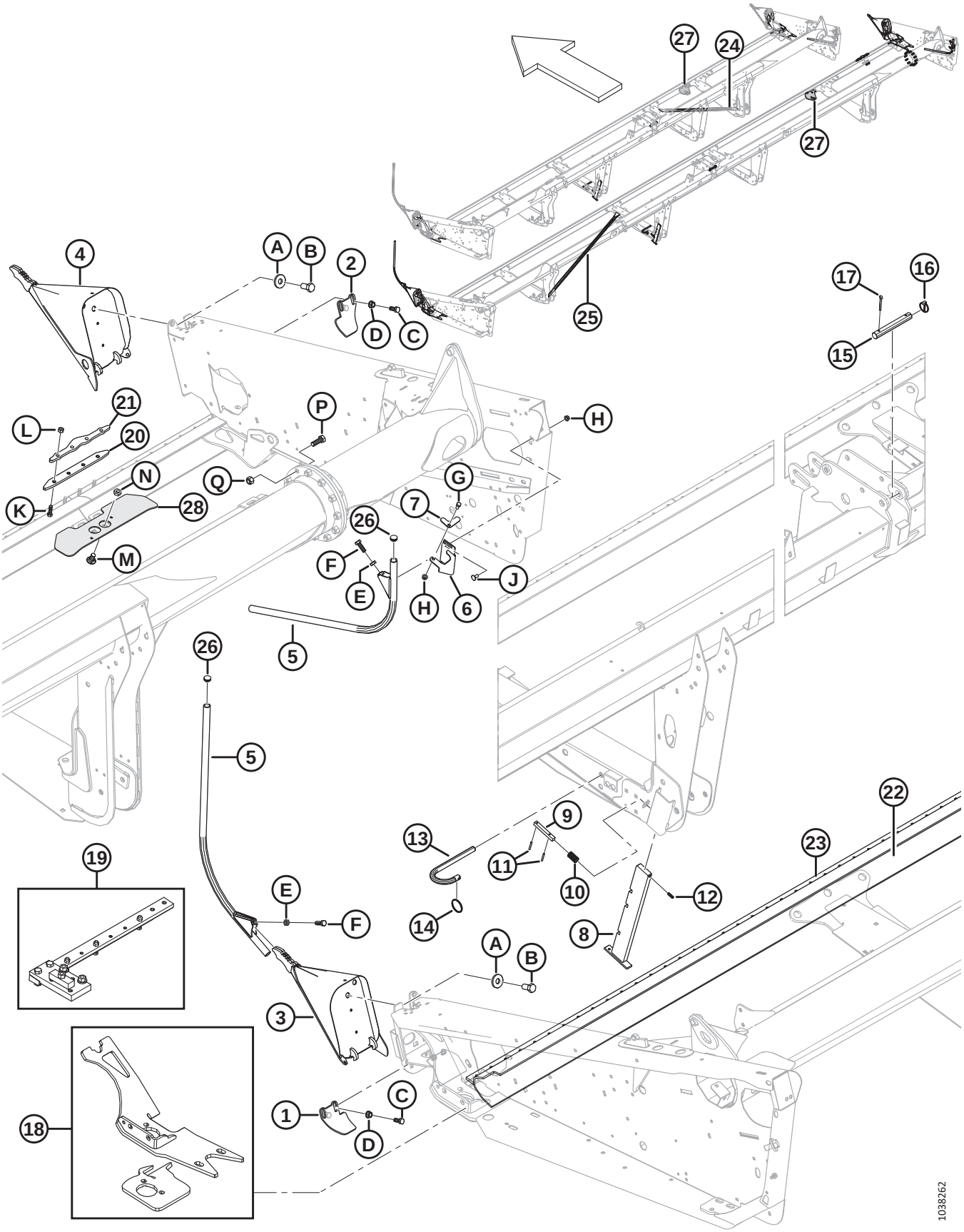

HEADER FRAME – DIVIDERS AND STAND

Ref	Part Number	Description	Qty	Serial Number
28	**125418**	**SUPPORT – SPLIT CBAR CONNECTION WELDT (40 FT SPLIT FRAME HDR ONLY)**	**1**	
	253552	**SUPPORT – SPLIT CBAR CONNECTION WELDT (45 FT SPLIT FRAME HDR ONLY)**	**1**	
A	6647	WASHER – FLAT		
B	135579	BOLT – HEX HD 3/4-16 UNF		
C	21491	BOLT – HH 1/2 NC X 1.25 LG GR 5 ZP		
D	21383	NUT – FLANGE .500-13 UNC (SER FACE)		
E	21056	NUT – HEX JAM 1/2-13 UNC GR 5 ZP		
F	18723	BOLT – HH 1/2 NC X 1.5 LG GR 5 ZP		
G	21567	BOLT – HEX HD .375-16 UNC X 0.75 LG		
H	30228	NUT – FLANGE DT SMOOTH FACE 0.375-16 UNC		
J	21863	BOLT – RHSSN 3/8 NC X 0.75 LG GR 5 ZP		
K	113814	BOLT – HH 7/16 NC X 1.5 LG GR.5 ZP (SPLIT FRAME ONLY)		
L	18654	NUT – HEX 7/16-14 UNC GR 5 ZP (SPLIT FRAME ONLY)		
M	**103562**	**BOLT – RHSN 5/8 NC X 1.25 GR 5 ZP**		
N	21941	NUT – HEX LOCK JAM (END DTTHD) 5/8-11 UNC GR 5 ZP (SPLIT FRAME ONLY)		
P	135340	BOLT – HH 5/8 NC X 1.75 LG GR 8 ZP (SPLIT FRAME ONLY)		
Q	134438	NUT – HEX LOCK DT 5/8-11-GR8-ZP (SPLIT FRAME ONLY)		

2 Header Frame – Endshields

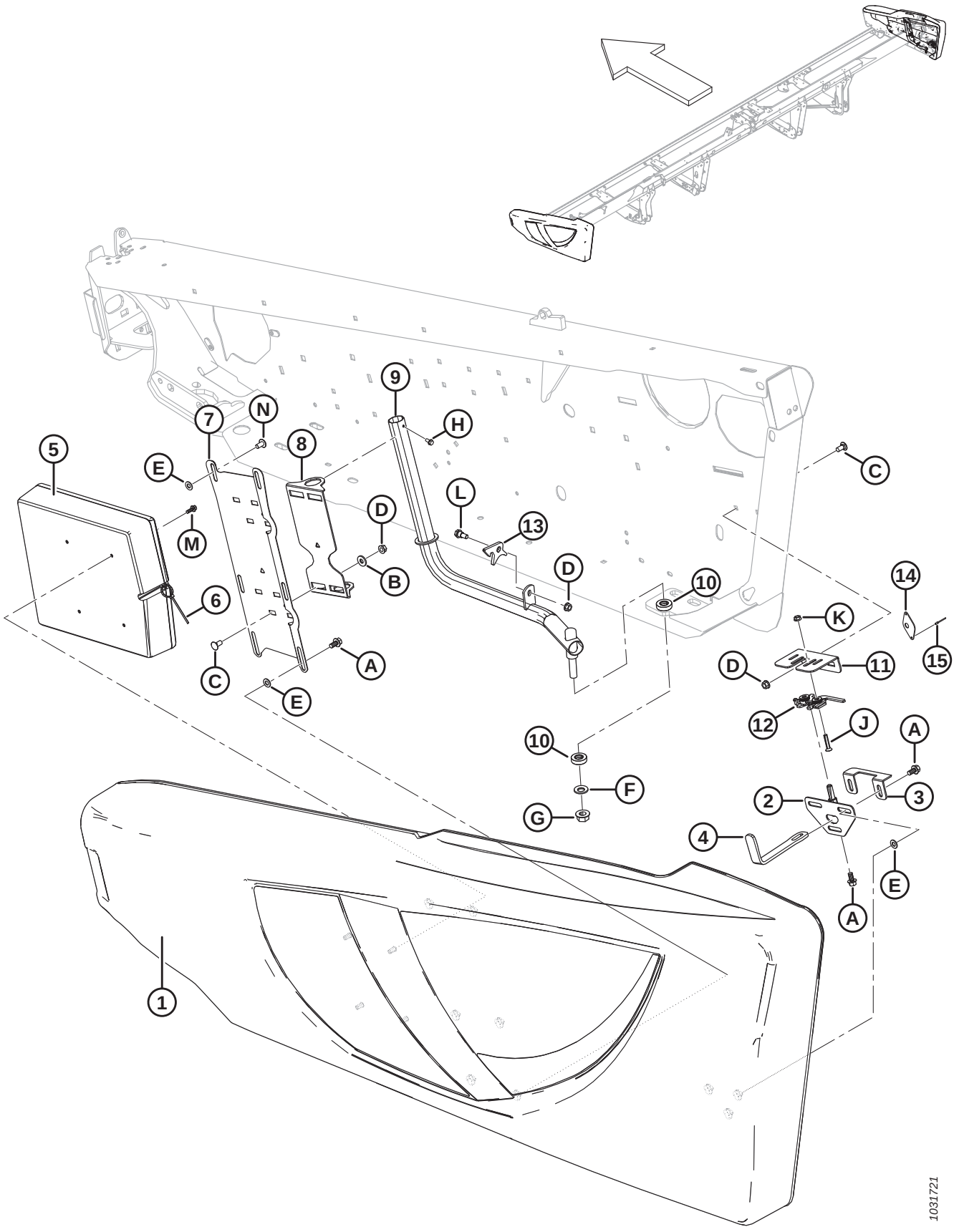

Ref	Part Number	Description	Qty	Serial Number
1	255004	SHIELD – LH, C/W TEE NUTS, BLACK [7]	1	
	255019	SHIELD – RH, C/W TEE NUTS, BLACK [7]	1	
	304601	SHIELD ASSY – RED, LH, BLACK ACCENT [7]	1	
	304602	SHIELD ASSY – RED, RH, BLACK ACCENT [7]	1	
	165524	REFLECTOR – RED, 230 MM [8]		
1	258199	SHIELD ASSY – GREEN W/ DECAL, LH	1	
	258200	SHIELD ASSY – GREEN W/ DECAL, RH	1	
2	253624	PIN – ENDSHIELD LATCH WELDT	2	
3	253627	RETAINER – ENDSHIELD	2	
4	253164	SUPPORT – ENDSHIELD LATCH	2	
5	220107	CASE – MANUAL (LH ENDSHIELD ONLY)	1	
	164009	SOCKET – TORX PLUS IP 27	A/R	
6	21763	FASTENER – CABLE TIE (BLACK)	1	
7	304304	SUPPORT – LH SHIELD	1	346190–
	253297	SUPPORT – LH SHIELD	1	–346189
	253298	SUPPORT – RH SHIELD	1	
8	253299	PIVOT – SHIELD	2	
9	255678	TUBE WELDMENT LH SHIELD	1	
	255679	TUBE WELDMENT RH SHIELD	1	
10	125176	BEARING – THRUST	4	
11	253601	SUPPORT – ENDSHIELD LATCH LH	1	
	253602	SUPPORT – ENDSHIELD LATCH RH	1	
12	134003	ASSY – STIRRUP LATCH LH	1	
	134002	ASSY – STIRRUP LATCH RH	1	
13	255041	LATCH – ENDSHIELD	2	
14	165858	GUIDE – ENDSHIELD LATCH (EXPORT ONLY)	1	
15	14338	RIVET – BLIND 1/8 X .125 (EXPORT ONLY)	2	
A	21821	BOLT – HH FLG (SER FACE) 3/8 NC X 0.75 GR 5 ZP		
B	20535	WASHER – FLAT		
C	21863	BOLT – RHSSN 3/8 NC X 0.75 LG GR 5 ZP		
D	30228	NUT – FLANGE DT SMTH FACE 0.375-16 UNC		
E	18598	WASHER – SAE FLAT 13/32 I.D. X 13/16 IN. O.D. ZP		
F	184718	WASHER – CON SPRING M16 STL SAE 1050-1075		
G	50225	NUT – FLANGE DT SMTH FACE .625-11 UNC		
H	21055	SCREW – SELF TAP HEX WASH HD 1/4 NC X 1/2		
J	30504	SCREW – FLAT CSK MACH 5/16 NC X 1-1/2 LG GR 5 ZP		
K	30280	NUT – FLG SIDE LK SMTH FACE 5/16 NC GR 5 ZP		
L	172259	BOLT – SHOULDER .375-16 UNC		
M	NSS	BOLT – HH SER FLG 1/4-20 X 0.625-GR5-AA3L		
N	135157	SCREW – MACHINE		

7. For endshield decals, refer to Sections *40 Decals – Product Identification, page 139*.
8. Refer to Section *39 Decals and Reflectors, page 135*. Reflector (MD #165524) used on right endshield only.

3 Guards, Hold-Downs, and Wearplates – Single Knife, Stub Guards

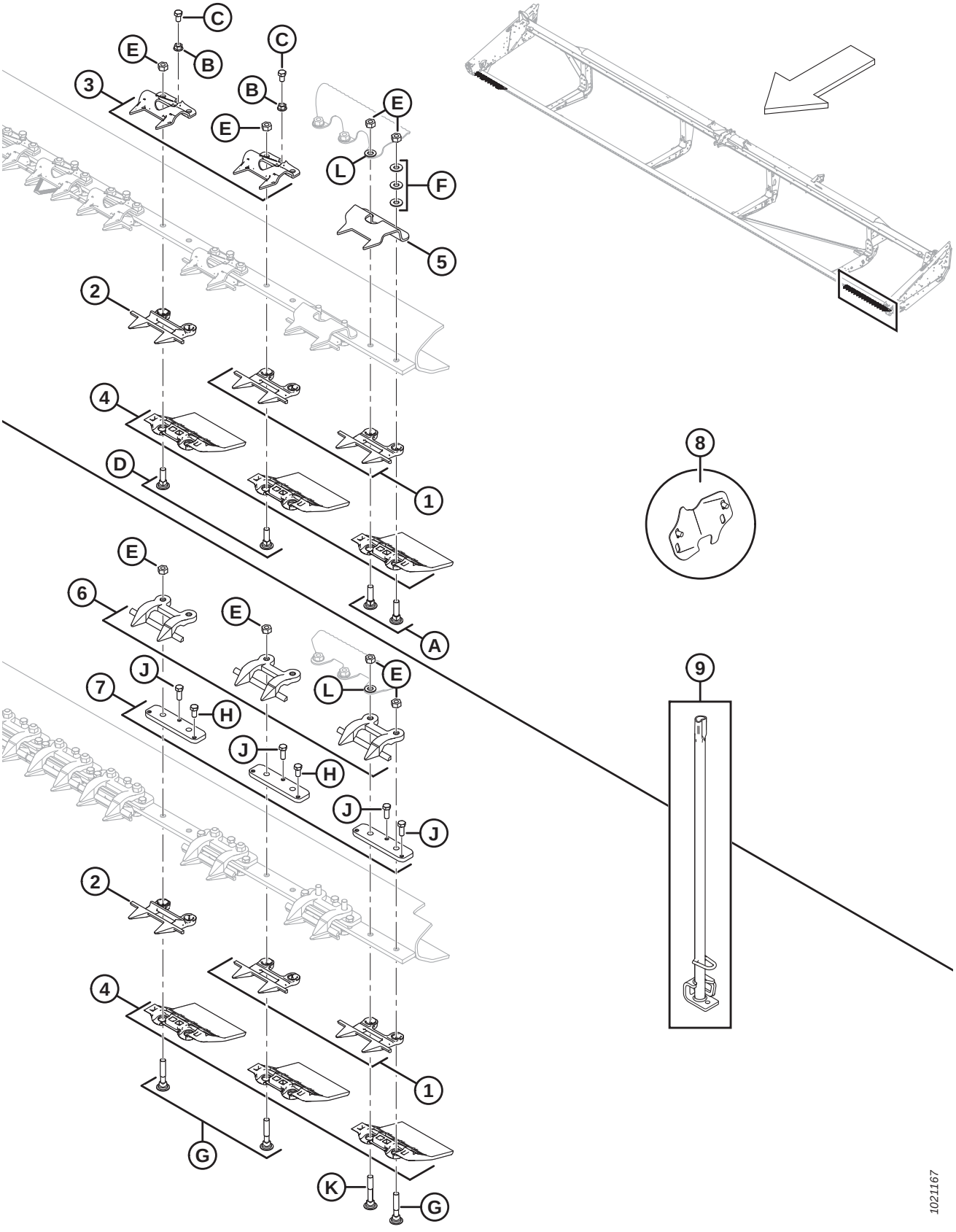

NOTE:

Illustration; TOP: Stub guards with sheet metal hold-downs, BOTTOM: Stub guards with forged hold-downs.

Ref	Part Number	Description	Qty	Serial Number
	B4865	KIT – CUTTERBAR POLY (20 FT HEADER) [9]		
	B4838	KIT – CUTTERBAR POLY (25 FT HEADER) [9]		
	B4839	KIT – CUTTERBAR POLY (30 FT HEADER) [9]		
	B4840	KIT – CUTTERBAR POLY (35 FT HEADER) [9]		
	B4841	KIT – CUTTERBAR POLY (40 FT HEADER) [9]		
	B5114	KIT – CUTTERBAR POLY (45 FT HEADER) [9]		
1	118347	SICKLE GUARD – STUB, W/O WEARBAR (DRIVE END)	4	
2	118346	SICKLE GUARD – STUB, W/ WEARBAR [10]		
3	118351	CLIP – SHEET METAL HOLD DOWN [11]		
4	129297	WEARPLATE – UNDER CUTTERBAR, POLYETHYLENE [12]		
5	165209	GUIDE – SHEET METAL STUB, KNIFEHEAD END	2	
6	34359	GUIDE [12]		
7	34980	BAR – ADJUSTER [12]		
8	220103	KIT – COVER, KNIFE CUTOUT (30–40 FT, STUB) [13]		
	220102	KIT – COVER, KNIFE CUTOUT (20–25 FT, STUB) [13]		
9	140135	TOOL WELDT – GUARD STRAIGHTENING TOOL	1	
A	120639	BOLT – RHSN SPECIAL 7/16 NC X 1.75 LG GR 5 ZP		
B	118193	NUT – FLANGE HEX .375 UNC		
C	118154	BOLT – HH 3/8 NC X 5/8 TFL GR 8 ZP		
D	120558	BOLT – RHSN SPECIAL 7/16 NC X 1.5 LG GR 5 ZP		
E	18654	NUT – HEX 7/16-14 UNC GR 5 ZP		
F	18670	WASHER – SAE FLAT 7/16 I.D. X 1.0 IN. O.D. ZP		
G	279575	BOLT – RHSN SPECIAL 7/16 NC X 2.5 LG GR 5 ZP		
H	50119	BOLT – HH 3/8 NC X 0.75 STAIN STL		
J	50120	BOLT – HH 3/8 NC X 1 STAIN STL		
K	132404	BOLT – RHSN SPECIAL 7/16-14 X 2.75-GR5-ZP		
L	18688	WASHER – SAE FLAT 0.74 IN. I.D. X 0.92 IN. O.D. ZP		

9. Includes cutterbar wearplate (MD #129297) and hardware. Kits available through Whole Goods only.
10. Complete cutterbar quantities: 20 ft. = 36, 25 ft. = 46, 30 ft. = 56, 35 ft. = 66, 40 ft. = 76.
11. Complete cutterbar quantities: 20 ft. = 38, 25 ft. = 48, 30 ft. = 58, 35 ft. = 68. 40 ft. = 78.
12. Complete cutterbar quantities: 20 ft. = 40, 25 ft. = 50, 30 ft. = 60, 35 ft. = 70, 40 ft. = 80.
13. Used with stub guards and sheet metal hold-downs. Includes two covers, hardware, and instructions.

4 Guards, Hold-Downs, and Wearplates – Single Knife, Pointed and Pointed with End Stubs

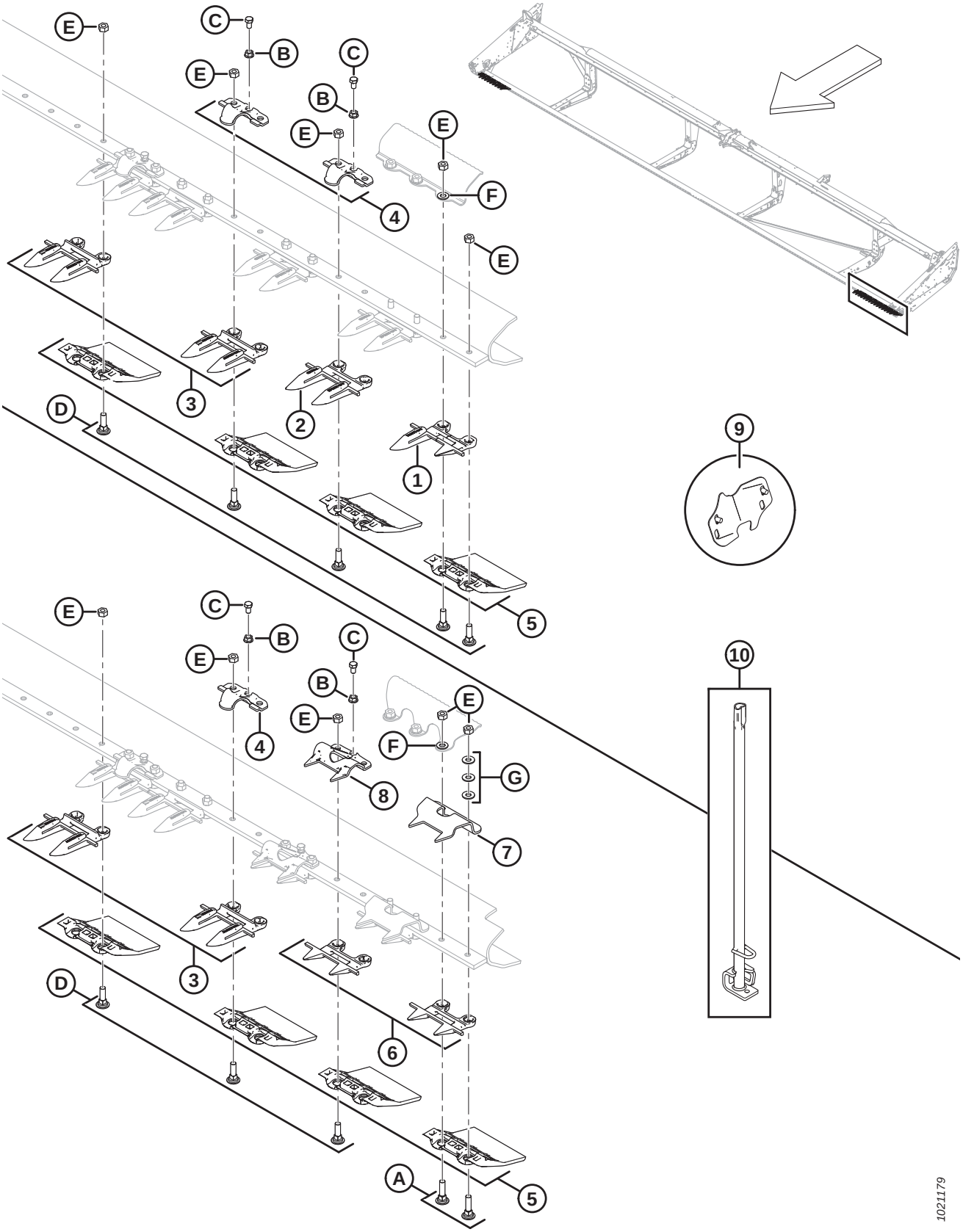

NOTE:

Illustration; TOP: Single knife, pointed guards, BOTTOM: Single knife, pointed guards with end stubs.

Ref	Part Number	Description	Qty	Serial Number
	B4865	KIT – CUTTERBAR POLY (20 FT HEADER) [14]		
	B4838	KIT – CUTTERBAR POLY (25 FT HEADER) [14]		
	B4839	KIT – CUTTERBAR POLY (30 FT HEADER) [14]		
	B4840	KIT – CUTTERBAR POLY (35 FT HEADER) [14]		
	B4841	KIT – CUTTERBAR POLY (40 FT HEADER) [14]		
	304990	KIT – POINTED GUARDS 25 FT SK [15]		
	304991	KIT – POINTED GUARDS 30 FT SK [15]		
	304992	KIT – POINTED GUARDS 35 FT SK [15]		
	304993	KIT – POINTED GUARDS 40 FT SK [15]		
1	118301	SICKLE GUARD – LH, OUTBOARD (DRIVE END)	1	
	118302	SICKLE GUARD – RH, OUTBOARD	1	
2	118345	SICKLE GUARD – W/ POINTS, W/O WEARBAR (3 PER END)	3	
3	118344	SICKLE GUARD – W/ POINTS [16]		
4	118162	CLIP – HOLD-DOWN [17]		
5	129297	WEARPLATE – UNDER CUTTERBAR, POLYETHYLENE [18]		
6	118347	SICKLE GUARD – STUB, W/O WEARBAR (DRIVE END)	4	
	118346	SICKLE GUARD – STUB, W/ WEARBAR	4	
7	165209	GUIDE – SHEET METAL STUB, KNIFEHEAD END	2	
8	118351	CLIP – SHEET METAL HOLD DOWN	6	
9	220101	KIT – COVER, KNIFE CUTOUT (30–40 FT, POINTED) [19]		
	220100	KIT – COVER, KNIFE CUTOUT (20–25 FT, POINTED) [19]		
10	140135	TOOL WELDT – GUARD STRAIGHTENING TOOL	1	

14. Includes cutterbar wearplate (MD #129297) and hardware. Kits available through Whole Goods only.
15. Complete cutterbar kits for pointed guards. Kit includes outboard guards (MD #118301, 118302), and sickle guards (MD #118344, 118345). Refer to Section *54 (Option) Pointed Guard Kit, Single Knife, page 169*.
16. Complete cutterbar quantities: 20 ft. = 31, 25 ft. (end stubs) = 42, 25 ft. (pointed) = 45, 30 ft. (end stubs) = 52, 30 ft. (pointed) = 55, 35 ft. = 65, 40 ft. = 75.
17. Complete cutterbar quantities: 20 ft. = 35, 25 ft. (end stubs) = 21, 25 ft. (pointed) = 25, 30 ft. (end stubs) = 26, 30 ft. (pointed) = 30, 35 ft. = 35, 40 ft. = 40.
18. Complete cutterbar quantities: 20 ft. = 40, 25 ft. = 50, 30 ft. = 60, 35 ft. = 70, 40 ft. = 80.
19. Used with pointed guards and forged hold-downs. Includes two covers and hardware.

GUARDS, HOLD-DOWNS, AND WEARPLATES – SINGLE KNIFE, POINTED AND POINTED WITH END STUBS

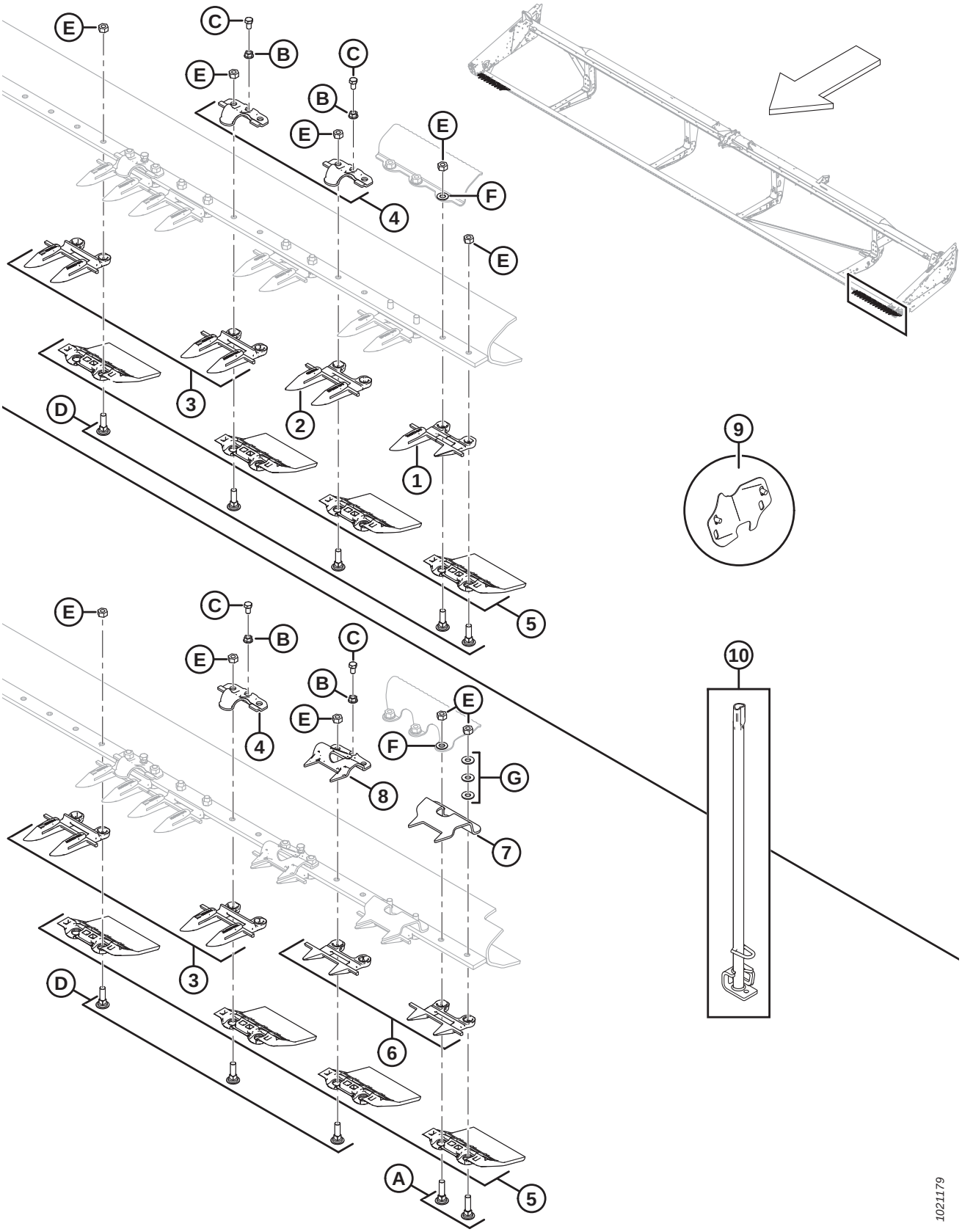

Ref	Part Number	Description	Qty	Serial Number
A	120639	BOLT – RHSN SPECIAL 7/16 NC X 1.75 LG GR 5 ZP [20]		
	21468	BOLT – RHSN 7/16 NC X 1.75 LG GR 5 ZP [21]		
B	118193	NUT – FLANGE HEX .375 UNC		
C	118154	BOLT – HH 3/8 NC X 5/8 TFL GR 8 ZP		
D	120558	BOLT – RHSN SPECIAL 7/16 NC X 1.5 LG GR 5 ZP [20]		
	8218	BOLT – RHSN 7/16 NC X 1.5 LG GR 5 ZP [21]		
E	18654	NUT – HEX 7/16-14 UNC GR 5 ZP		
F	18688	WASHER – SAE FLAT 0.74 IN. I.D. X 0.92 IN. O.D. ZP		
G	18670	WASHER – SAE FLAT 7/16 I.D. X 1.0 IN. O.D. ZP		

20. Used with cutterbar wearplate (MD #129297).
21. Used when cutterbar wearplate (MD #129297) is not present.

5 Guards, Hold-Downs, and Wearplates – Double Knife, Right End

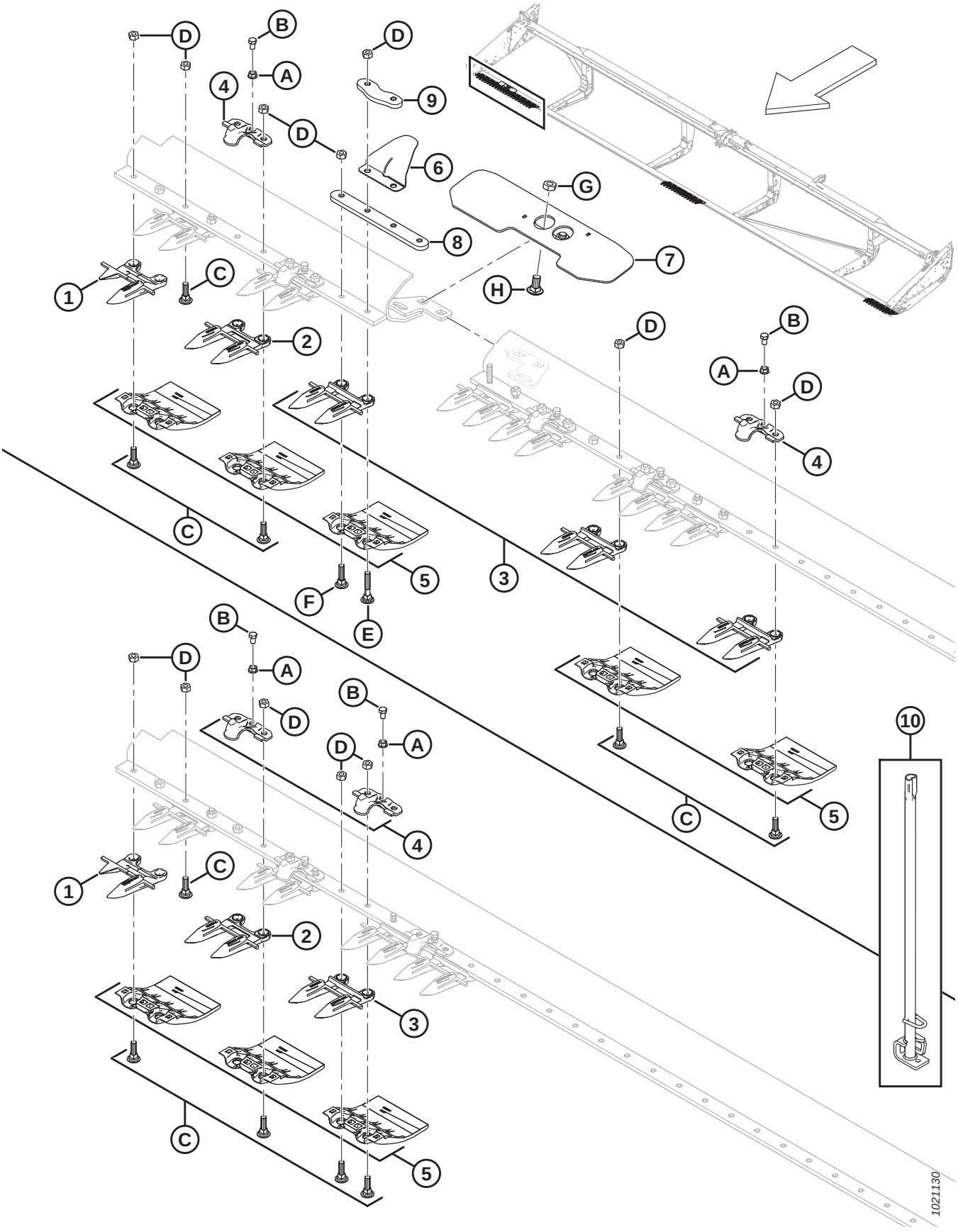

NOTE:

Illustration; TOP: Double knife, split frame right end (pointed), BOTTOM: Double knife, standard right end (pointed).

Ref	Part Number	Description	Qty	Serial Number
	B4865	KIT – CUTTERBAR POLY (20 FT HEADER) [22]		
	B4838	KIT – CUTTERBAR POLY (25 FT HEADER) [22]		
	B4839	KIT – CUTTERBAR POLY (30 FT HEADER) [22]		
	B4840	KIT – CUTTERBAR POLY (35 FT HEADER) [22]		
	B4841	KIT – CUTTERBAR POLY (40 FT HEADER) [22]		
	B5114	KIT – CUTTERBAR POLY (45 FT HEADER) [22]		
	304985	KIT – POINTED GUARDS 25 FT DK [23]		
	304986	KIT – POINTED GUARDS 30 FT DK [23]		
	304987	KIT – POINTED GUARDS 35 FT DK [23]		
	304988	KIT – POINTED GUARDS 40 FT DK [23]		
	304989	KIT – POINTED GUARDS 45 FT DK [23]		
	B5010	KIT – STUB GUARD CONVERSION (20 FT HEADER) [24]		
	B5011	KIT – STUB GUARD CONVERSION (25 FT HEADER) [24]		
	B5012	KIT – STUB GUARD CONVERSION (30 FT HEADER) [24]		
	B5013	KIT – STUB GUARD CONVERSION (35 FT HEADER) [24]		
1	118302	SICKLE GUARD – RH, OUTBOARD	1	
2	118345	SICKLE GUARD – W/ POINTS, W/O WEARBAR (3 PER END)	3	
3	118344	SICKLE GUARD – W/ POINTS [25]		
4	118162	CLIP – HOLD-DOWN [26]		
5	129297	WEARPLATE – UNDER CUTTERBAR, POLYETHYLENE [27]		
6	220114	COVER – HINGE AND SPLIT (SPLIT FRAME HDR ONLY)	1	
7	125418	SUPPORT – SPLIT CBAR CONNECTION WELDT (40 FT SPLIT FRAME HDR ONLY)	1	
	253552	SUPPORT – SPLIT CBAR CONNECTION WELDT (45 FT SPLIT FRAME HDR ONLY)	1	
8	294460	BAR – CUTTERBAR SPLICE (SPLIT FRAME HDR ONLY)	1	
9	220115	BAR – CUTTERBAR SPLICE (SPLIT FRAME HDR ONLY)	1	
10	140135	TOOL WELDT – GUARD STRAIGHTENING TOOL	1	
A	118193	NUT – FLANGE HEX .375 UNC		

22. Includes cutterbar wearplate (MD #129297) and hardware. Kits available through Whole Goods only.
23. Complete cutterbar kits for pointed guards. Kit includes outboard guards (MD #118301, 118302), center guard (MD #124338), top center guide (MD #124344), and sickle guards (MD #118344, 118345). Refer to Section *55 (Option) Pointed Guard Kit, Double Knife, page 171*.
24. Double-knife headers. For service parts, refer to Section *66 (Option) Stub Guard Conversion Kit, page 199*. Kits available through Whole Goods only.
25. Complete cutterbar quantities: 20 ft. = 31, 25 ft. = 41, 30 ft. = 51, 35 ft. = 61, 40 ft. = 71, 45 ft. = 81.
26. Complete cutterbar quantities: 20 ft. = 35, 25 ft. = 45, 30 ft. = 55, 35 ft. = 65, 40 ft. = 39, 45 ft. = 44.
27. Complete cutterbar quantities: 20 ft. = 40, 25 ft. = 50, 30 ft. = 60, 35 ft. = 70, 40 ft. = 80, 45 ft. = 90.

GUARDS, HOLD-DOWNS, AND WEARPLATES – DOUBLE KNIFE, RIGHT END

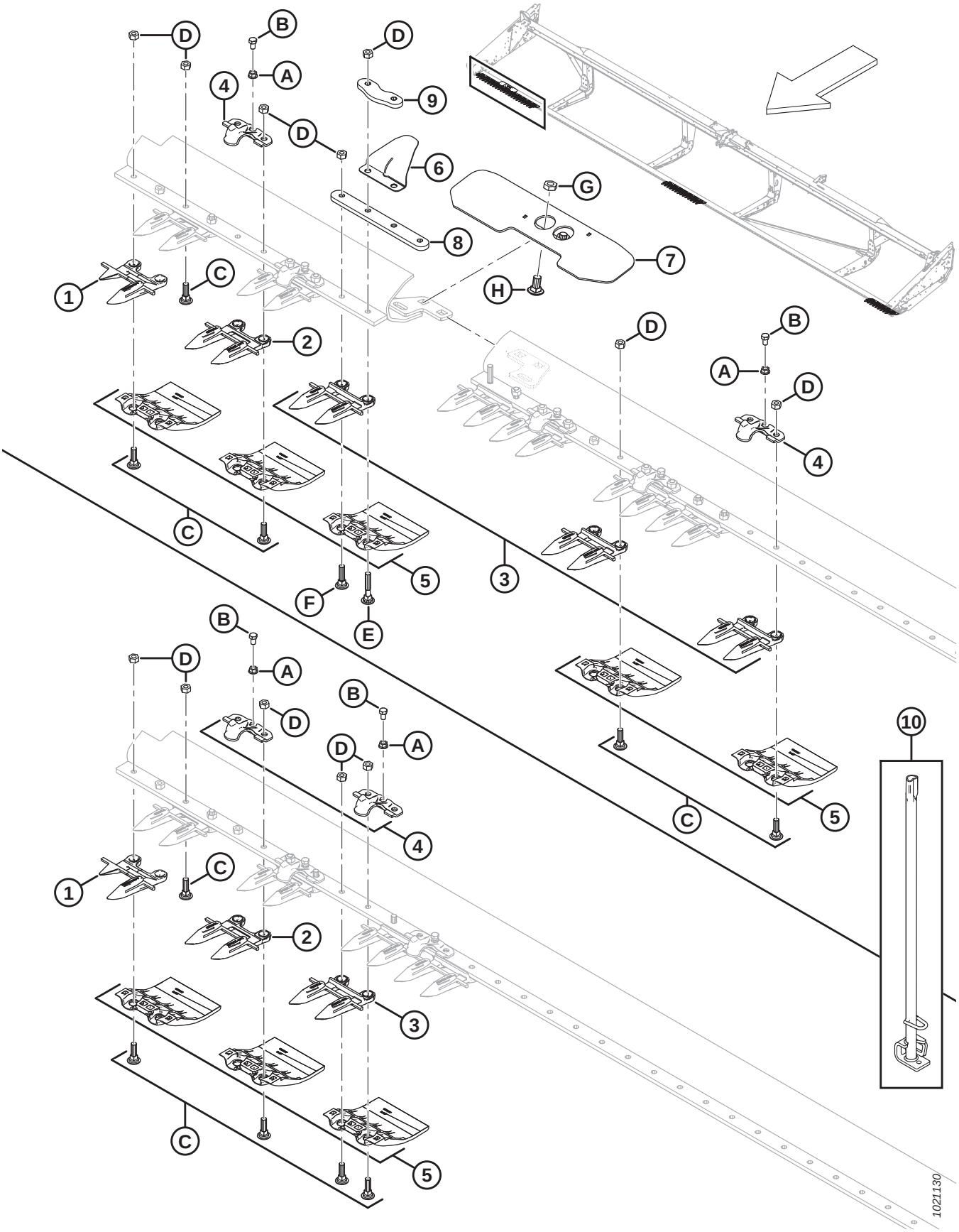

GUARDS, HOLD-DOWNS, AND WEARPLATES – DOUBLE KNIFE, RIGHT END

Ref	Part Number	Description	Qty	Serial Number
B	118154	BOLT – HH 3/8 NC X 5/8 TFL GR 8 ZP		
C	120558	BOLT – RHSN SPECIAL 7/16 NC 1.5 LG GR 5 ZP		
D	18654	NUT – HEX 7/16-14 UNC GR 5 ZP		
E	279575	BOLT – RHSN SPECIAL 7/16 NC X 2.5 LG GR 5 ZP		
F	120639	BOLT – RHSN SPECIAL 7/16 NC X 1.75 LG GR 5 ZP		
G	21941	NUT – HEX LOCK JAM (END DT THD) 5/8-11 UNC GR 5 ZP		
H	103562	BOLT – RHSN 5/8 NC X 1.25 GR 5 ZP		

6 Guards, Hold-Downs, and Wearplates – Double Knife, Middle and Left End

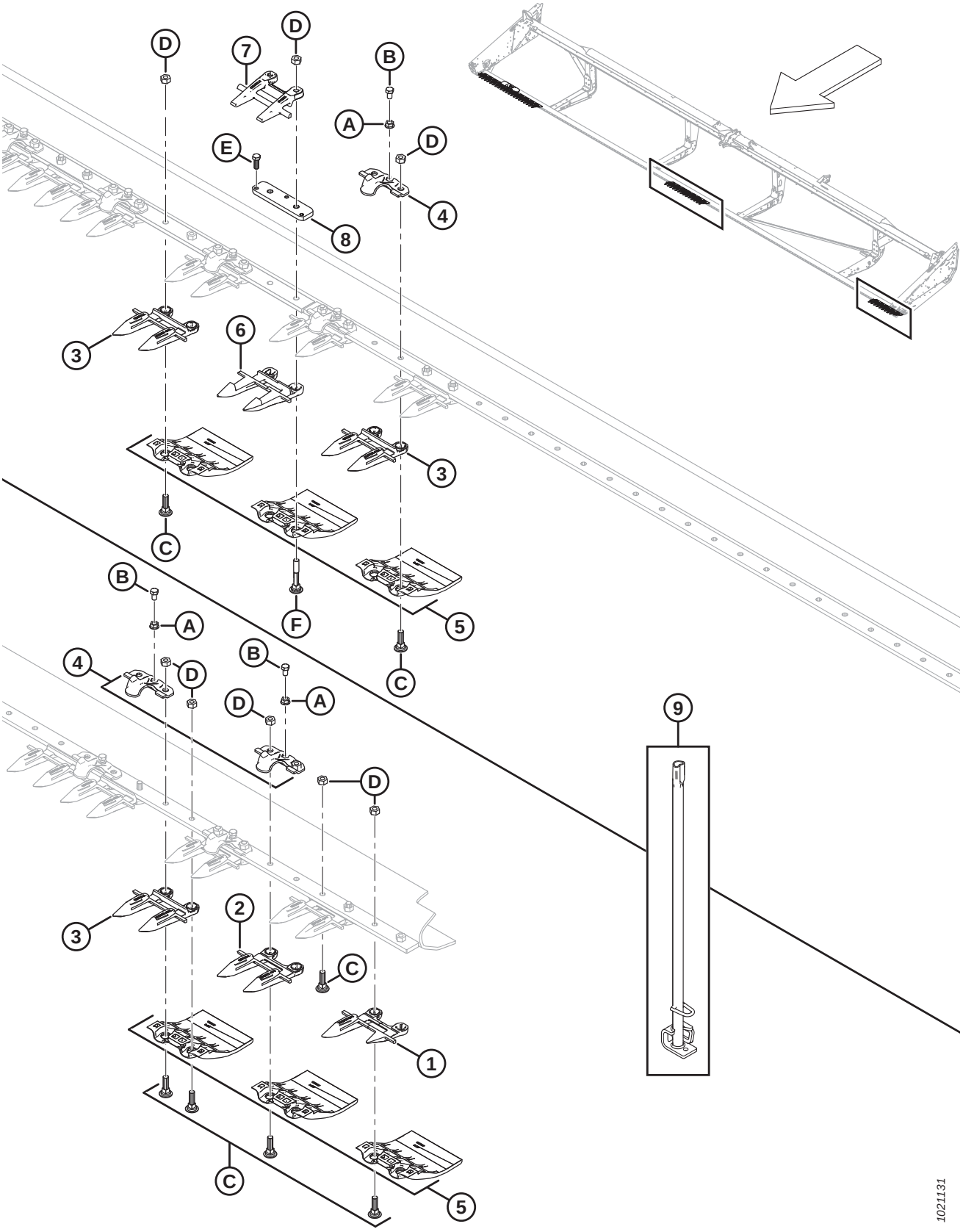

NOTE:

Illustration; TOP: Double knife, middle (pointed), BOTTOM: Double knife, left end (pointed).

Ref	Part Number	Description	Qty	Serial Number
	B4865	KIT – CUTTERBAR POLY (20 FT HEADER) [28]		
	B4838	KIT – CUTTERBAR POLY (25 FT HEADER) [28]		
	B4839	KIT – CUTTERBAR POLY (30 FT HEADER) [28]		
	B4840	KIT – CUTTERBAR POLY (35 FT HEADER) [28]		
	B4841	KIT – CUTTERBAR POLY (40 FT HEADER) [28]		
	B5114	KIT – CUTTERBAR POLY (45 FT HEADER) [28]		
	304985	KIT – POINTED GUARDS 25 FT DK [29]		
	304986	KIT – POINTED GUARDS 30 FT DK [29]		
	304987	KIT – POINTED GUARDS 35 FT DK [29]		
	304988	KIT – POINTED GUARDS 40 FT DK [29]		
	304989	KIT – POINTED GUARDS 45 FT DK [29]		
	B5010	KIT – STUB GUARD CONVERSION (20 FT HEADER) [30]		
	B5011	KIT – STUB GUARD CONVERSION (25 FT HEADER) [30]		
	B5012	KIT – STUB GUARD CONVERSION (30 FT HEADER) [30]		
	B5013	KIT – STUB GUARD CONVERSION (35 FT HEADER) [30]		
1	118301	SICKLE GUARD – LH, OUTBOARD	1	
2	118345	SICKLE GUARD – W/ POINTS, W/O WEARBAR (3 PER END)	3	
3	118344	SICKLE GUARD – W/ POINTS [31]		
4	118162	CLIP – HOLD-DOWN [32]		
5	129297	WEARPLATE – UNDER CUTTERBAR, POLYETHYLENE [33]		
6	124338	SICKLE GUARD – CENTER, POINTED	1	
7	124344	GUIDE – TOP-CENTER	1	
8	34980	BAR – ADJUSTER	1	
9	140135	TOOL WELDT – GUARD STRAIGHTENING TOOL	1	
A	118193	NUT – FLANGE HEX .375 UNC		
B	118154	BOLT – HH 3/8 NC X 5/8 TFL GR 8 ZP		
C	120558	BOLT – RHSN SPECIAL 7/16 NC X 1.5 LG GR 5 ZP		
D	18654	NUT – HEX 7/16-14 UNC GR 5 ZP		

28. Includes cutterbar wearplate (MD #129297) and hardware. Kits available through Whole Goods only.
29. Complete cutterbar kits for pointed guards. Kit includes outboard guards (MD #118301, 118302), center guard (MD #124338), top center guide (MD #124344), and sickle guards (MD #118344, 118345). Refer to Section *55 (Option) Pointed Guard Kit, Double Knife, page 171*.
30. Double-knife headers. For service parts, refer to Section *66 (Option) Stub Guard Conversion Kit, page 199*. Kits available through Whole Goods only.
31. Complete cutterbar quantities: 20 ft. = 31, 25 ft. = 41, 30 ft. = 51, 35 ft. = 61, 40 ft. = 71, 45 ft. = 81.
32. Complete cutterbar quantities: 20 ft. = 35, 25 ft. = 45, 30 ft. = 55, 35 ft. = 65, 40 ft. = 39, 45 ft. = 44.
33. Complete cutterbar quantities: 20 ft. = 40, 25 ft. = 50, 30 ft. = 60, 35 ft. = 70, 40 ft. = 80, 45 ft. = 90.

GUARDS, HOLD-DOWNS, AND WEARPLATES – DOUBLE KNIFE, MIDDLE AND LEFT END

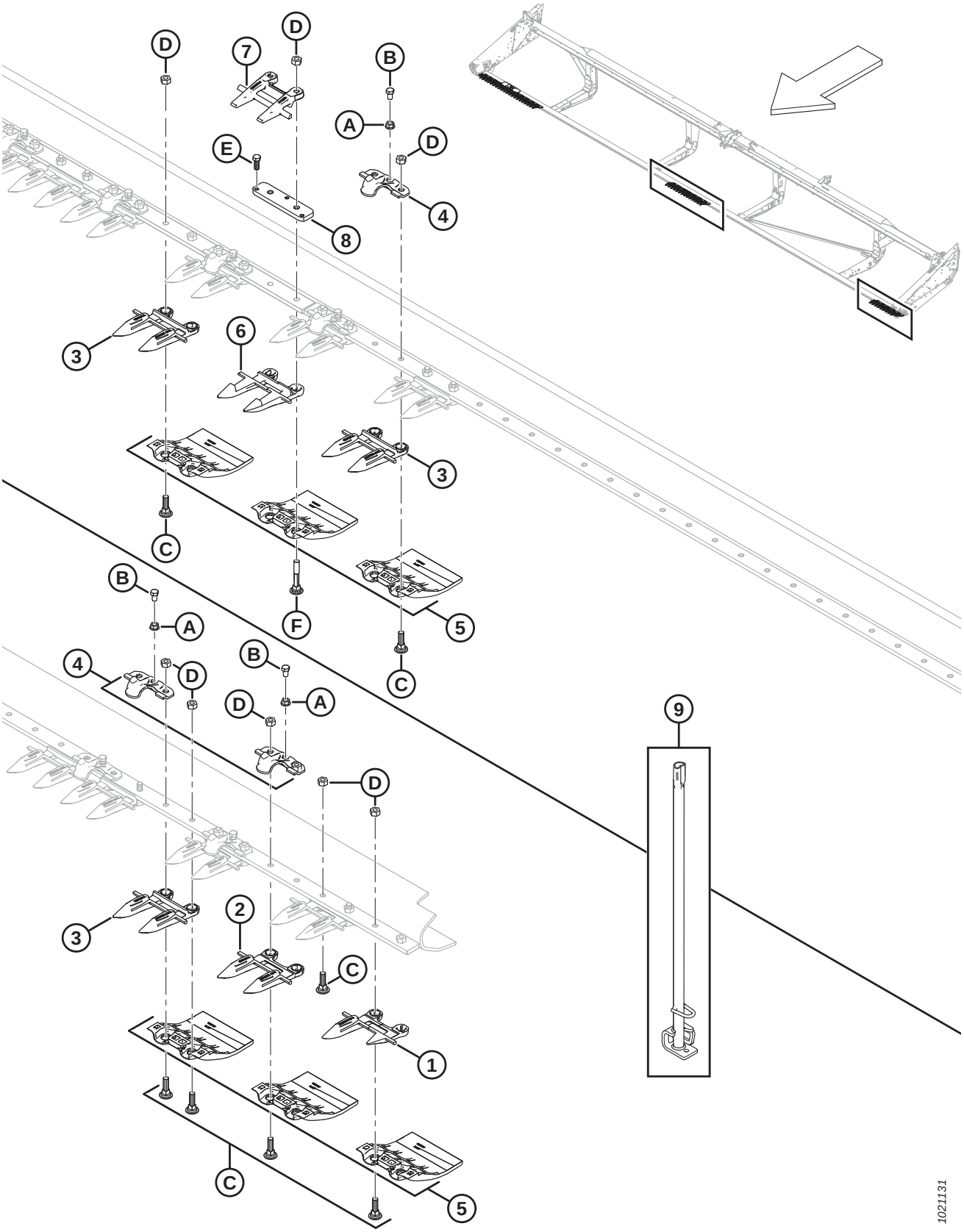

Ref	Part Number	Description	Qty	Serial Number
E	50120	BOLT – HH 3/8 NC X 1 STAIN STL		
F	132404	BOLT – RHSN SPECIAL 7/16 NC X 2.75 LG GR 5 ZP		

7 Knife Components and Knifehead

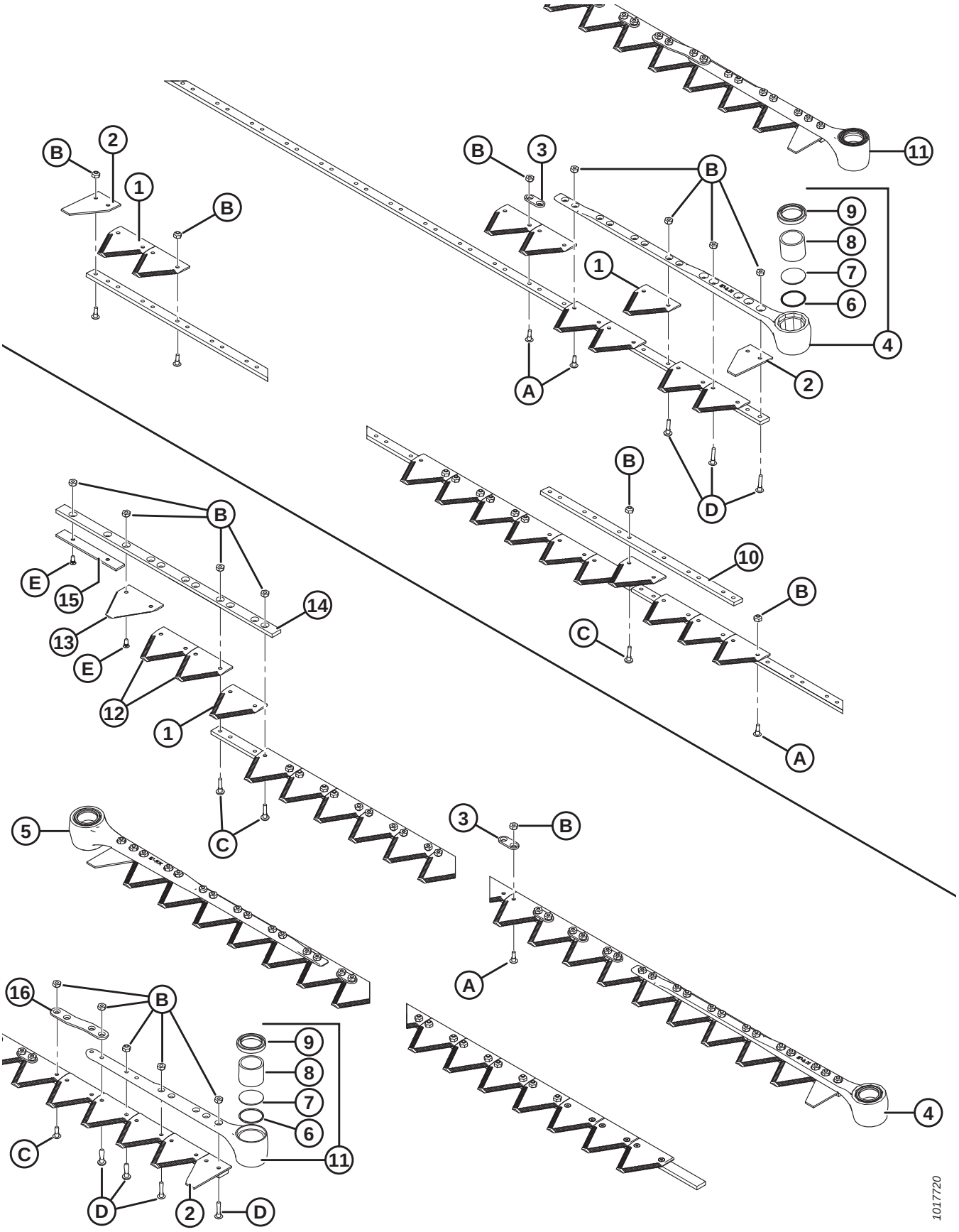

NOTE:

Top of illustration shows single knife; bottom shows double knife.

NOTE:

To service knife assemblies, refer to the following sections:

8 Segmented Knives – Single-Knife Headers, Fine-Tooth Sections, page 25
9 Segmented Knives – Single-Knife Headers, Coarse-Tooth Sections, page 29
10 Segmented Knives – Single-Knife Headers, Ultra Coarse-Tooth Sections, page 33
11 Segmented Knives – Double-Knife Headers, Fine-Tooth Sections, page 35
12 Segmented Knives – Double-Knife Headers, Coarse-Tooth Sections, page 39
13 Segmented Knives – Double-Knife Headers, Ultra Coarse-Tooth Sections, page 43

Ref	Part Number	Description	Qty	Serial Number
1	279641	COARSE SICKLE SECTION – 9 SPI (25 PACK) [34]		
	174845	COARSE SICKLE SECTION – 9 SPI (25 PACK) [34]	OPT	
	294947	SECT PKG – ULTRA COARSE, 4 SPI (25 PACK) [34]	OPT	
	279642	FINE SICKLE SECTION – 14 SPI (25 PACK) [34]	OPT	
	118491	FINE SICKLE SECTION – 14 SPI (25 PACK) [34]	OPT	
2	279468	SECTION – END, HALF SECTION (10 PACK)	2	
3	174857	BAR – REINFORCING (25 PACK)	40	
4	132896	HEAD ASSEMBLY – LH, 5° ANGLE [35]	1	
5	132897	HEAD ASSEMBLY – RH, 5° ANGLE [35]	1	
6	115670	O-RING – SICKLE HEAD	1	
7	113937	PLUG – SICKLE HEAD	1	
8	100500	BEARING – NEEDLE, SICKLE HEAD	1	
9	113222	SEAL – SICKLE HEAD [36]	1	
10	33955	BAR – SPLICE, 2-PIECE SICKLES [37]	1	
11	120832	HEAD ASSEMBLY – SICKLE [38]	2	

34. Quantities (individual sections): 20 ft. = 77, 25 ft. = 97, 30 ft. = 117, 35 ft. = 137, 40 ft. = 157.
35. 30–45 ft. only. Includes O-ring (MD #115670), plug (MD #113937), bearing (MD #100500), and seal (MD #113222).
36. Install with lip facing outward.
37. 35–40 ft. single knife.
38. 20–25 ft. only. Includes items O-ring (MD #115670), plug (MD #113937), bearing (MD #100500), and seal (MD #113222).

KNIFE COMPONENTS AND KNIFEHEAD

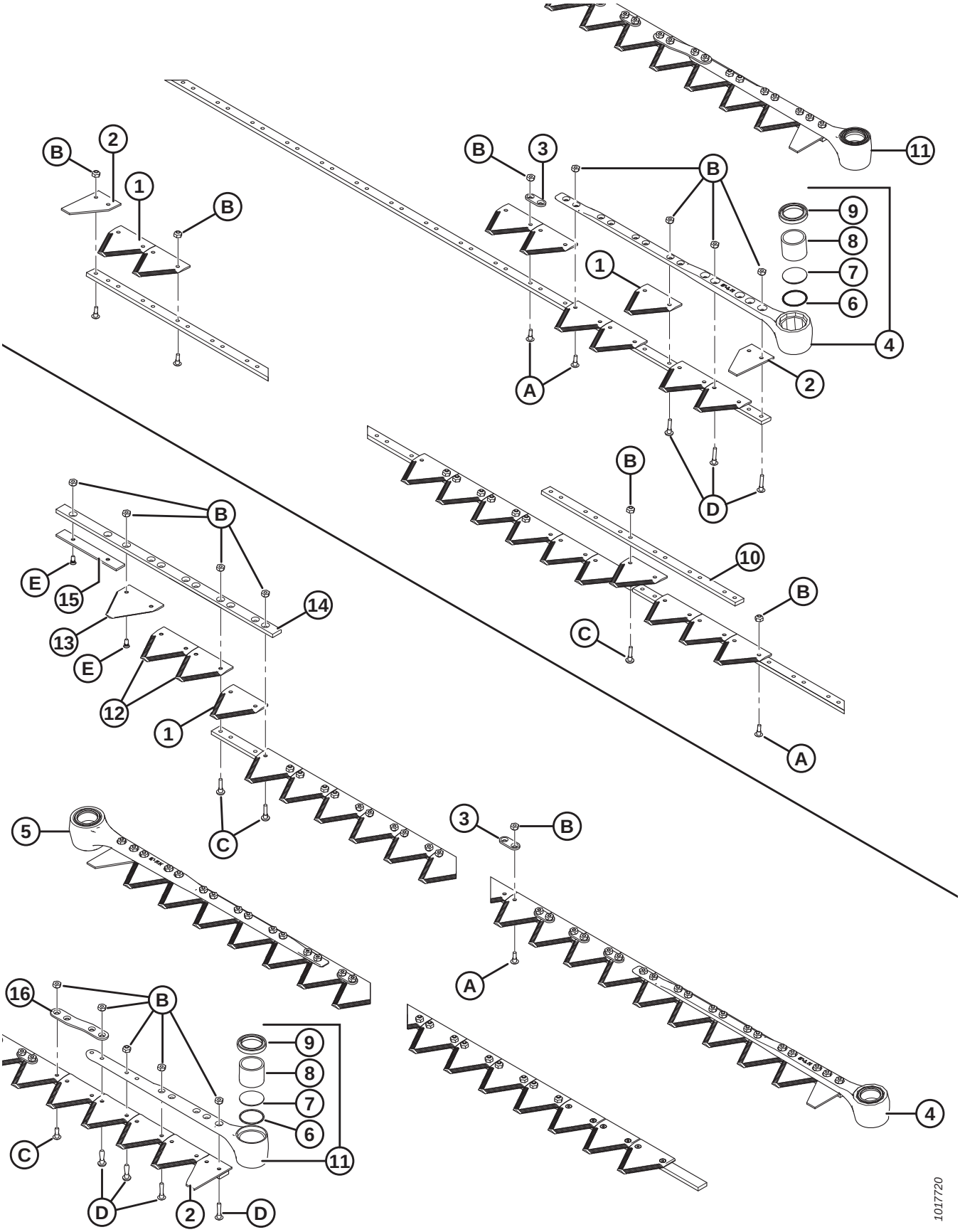

Ref	Part Number	Description	Qty	Serial Number
12	279310	COARSE SICKLE SECTION – BOTTOM CSK 9 SPI (10 PACK)	2	
	279851	COARSE SICKLE SECTION – BOTTOM CSK 9 SPI (10 PACK)	OPT	
	279312	FINE SICKLE SECTION – BOTTOM CSK 14 SPI (10 PACK)	OPT	
	279850	FINE SICKLE SECTION – BOTTOM CSK 14 SPI (10 PACK)	OPT	
	279996	KIT – CENTER OVERLAP FINE SICKLE [39]	OPT	
	279997	KIT – CENTER OVERLAP COARSE SICKLE [40]	OPT	
	335326	KIT – CENTER OVERLAP ULTRA COARSE SICKLE [41]	OPT	
13	279314	COARSE SICKLE SECTION – TOP CSK 9 SPI (10 PACK) [42]	4	
	279999	COARSE SICKLE SECTION – TOP CSK 9 SPI (10 PACK) [42]	OPT	
	279316	FINE SICKLE SECTION – TOP CSK 14 SPI (10 PACK) [42]	OPT	
	279848	FINE SICKLE SECTION – TOP CSK 14 SPI (10 PACK) [42]	OPT	
14	124880	GUIDE – TOP, LH SICKLE	1	
15	124881	BAR – WEAR, LH SICKLE	1	
16	129329	BAR – REINFORCING [43]	1	
A	135628	SCREW – BHRN #12-24 NC X 0.67 IN. (50 PACK) [44]		
B	135626	NUT – CSK, CENTER LOCK, #12-24 NC (50 PACK) [45]		
C	135630	SCREW – BHRN, #12-24 NC X 0.920 IN. (50 PACK) [46]		
D	135632	SCREW – BHRN, #12-24 NC X 1.05 IN. (50 PACK) [47]		
E	174165	SCREW – 90° CSK SKT HD, #12-24 NC X 0.5 IN. (50 PACK)		

39. Includes four top countersunk fine sickle sections (14 SPI), three bottom countersunk fine sickle sections (14 SPI), and all required hardware.
40. Includes four top countersunk coarse sickle sections (9 SPI), three bottom countersunk coarse sickle sections (9 SPI), and all required hardware.
41. Includes four top countersunk ultra coarse sickle sections (4 SPI), three bottom countersunk ultra coarse sickle sections (4 SPI), and all required hardware.
42. For LH knife, top countersunk sickle section is installed serrations down on top guide (MD #124880). For RH knife, top countersunk sickle sections are installed serrations up.
43. 20–25 ft. headers only.
44. Pack of 1000 – MD #135629.
45. Pack of 2000 – MD #135627.
46. Pack of 1000 – MD #135631.
47. Pack of 1000 – MD #135633.

8 Segmented Knives – Single-Knife Headers, Fine-Tooth Sections

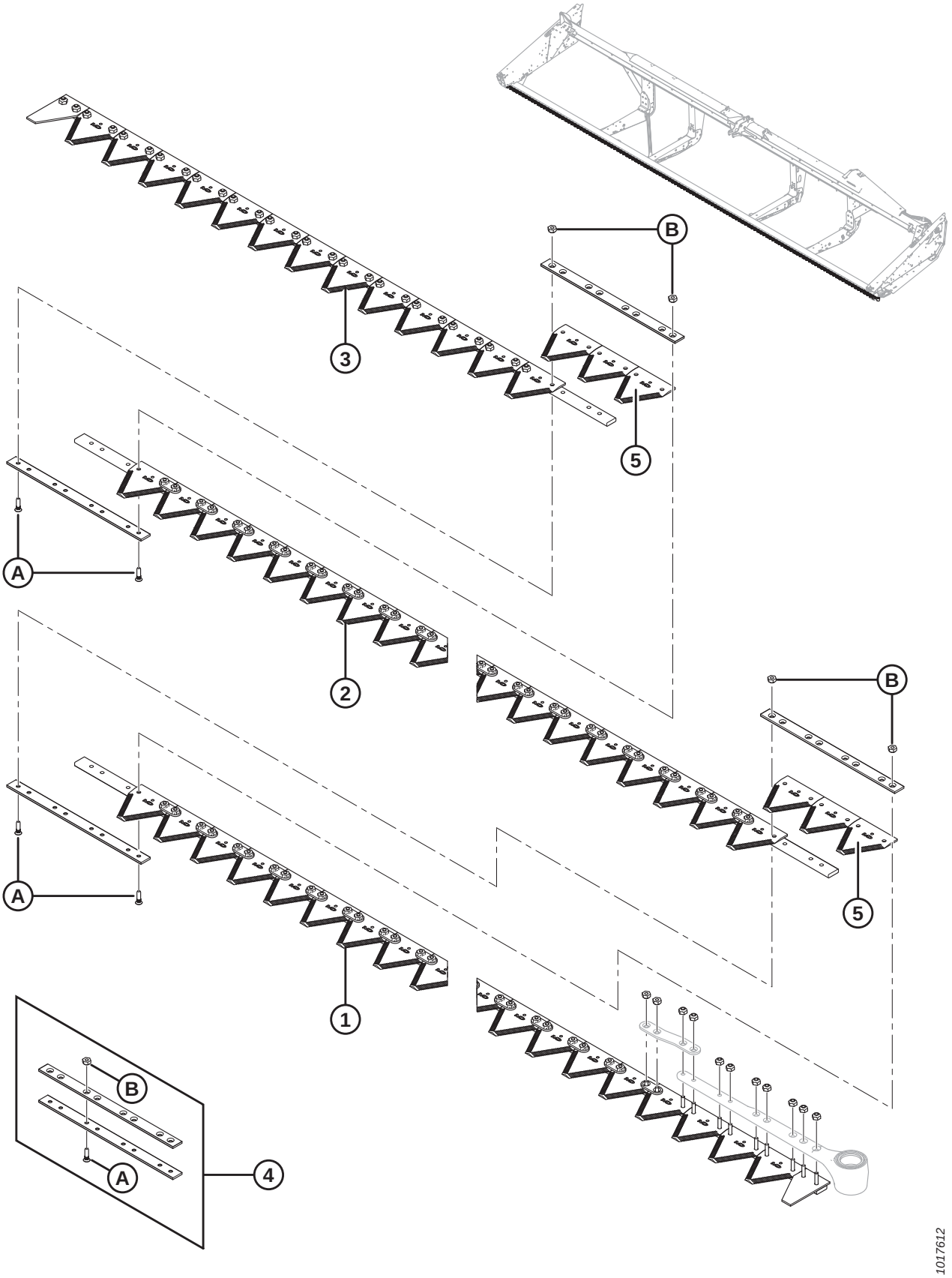

NOTE:

6.1–13.7 m (20–45 ft.) header knives are sold in segments; for a complete segment (less knifehead), refer to tables below:

Ref	Part Number	Description	Qty	Serial Number
		6.1 METER (20 FOOT)		
	335488	KIT – 20 FT FINE SINGLE KNIFE [48]		
1	279398	LEFT HEAD SEGMENT	1	
2	279399	CENTER SEGMENT	1	
3	279400	RIGHT, TAIL SEGMENT	1	
4	129043	MACDON SPLICE KIT [49]	2	
5	279642	SECTION – KONDEX FINE, 14 SPI (25 PACK)	6	
	118491	SECTION – BUSATIS FINE, 14 SPI (25 PACK)	6	
		7.6 METER (25 FOOT)		
	335489	KIT – 25 FT FINE SINGLE KNIFE [48]		
1	279398	LEFT HEAD SEGMENT	1	
2	279399	CENTER SEGMENT	1	
3	279401	RIGHT, TAIL SEGMENT	1	
4	129043	MACDON SPLICE KIT [49]	2	
5	279642	SECTION – KONDEX FINE, 14 SPI (25 PACK)	6	
	118491	SECTION – BUSATIS FINE, 14 SPI (25 PACK)	6	
		9.1 METER (30 FOOT)		
	335490	KIT – 30 FT FINE SINGLE KNIFE [48]		
1	279398	LEFT HEAD SEGMENT	1	
2	279399	CENTER SEGMENT	2	
3	279402	RIGHT, TAIL SEGMENT	1	
4	129043	MACDON SPLICE KIT [49]	3	
5	279642	SECTION – KONDEX FINE, 14 SPI (25 PACK)	9	
	118491	SECTION – BUSATIS FINE, 14 SPI (25 PACK)	9	
		10.7 METER (35 FOOT)		
	335491	KIT – 35 FT FINE SINGLE KNIFE [48]		
1	279398	LEFT HEAD SEGMENT	1	
2	279399	CENTER SEGMENT	2	
3	279403	RIGHT, TAIL SEGMENT	1	
4	129043	MACDON SPLICE KIT [49]	3	
5	279642	SECTION – KONDEX FINE, 14 SPI (25 PACK)	9	
	118491	SECTION – BUSATIS FINE, 14 SPI (25 PACK)	9	

48. Complete knife assembly kit.
49. Includes two splice bars and hardware.

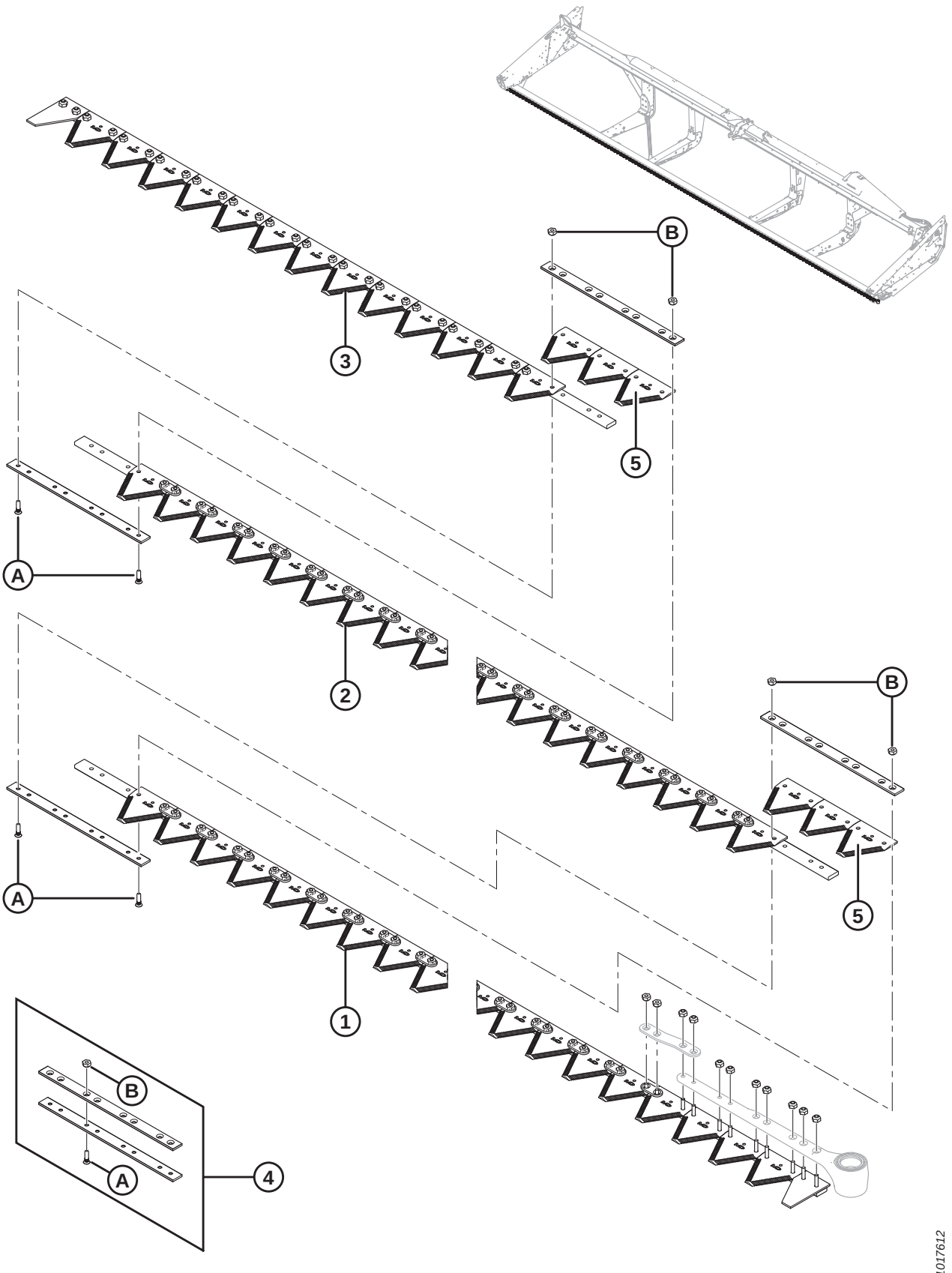
B
3
5
A
2
B
A
5
1
B
A
4
1017612

Ref	Part Number	Description	Qty	Serial Number
		12.2 METER (40 FOOT)		
	335492	KIT – 40 FT FINE SINGLE KNIFE [48]		
1	279398	LEFT HEAD SEGMENT	1	
2	279399	CENTER SEGMENT	3	
3	279404	RIGHT, TAIL SEGMENT	1	
4	129043	MACDON SPLICE KIT [50]	4	
5	279642	SECTION – KONDEX FINE, 14 SPI (25 PACK)	12	
	118491	SECTION – BUSATIS FINE, 14 SPI (25 PACK)	12	
A	129299	SCREW – 90º CSK SKT HD, #12-24 NC X 0.812 IN.		
B	135626	NUT – CSK, CENTER LOCK, #12-24 NC (50 PACK)		

50. Includes two splice bars and hardware.

9 Segmented Knives – Single-Knife Headers, Coarse-Tooth Sections

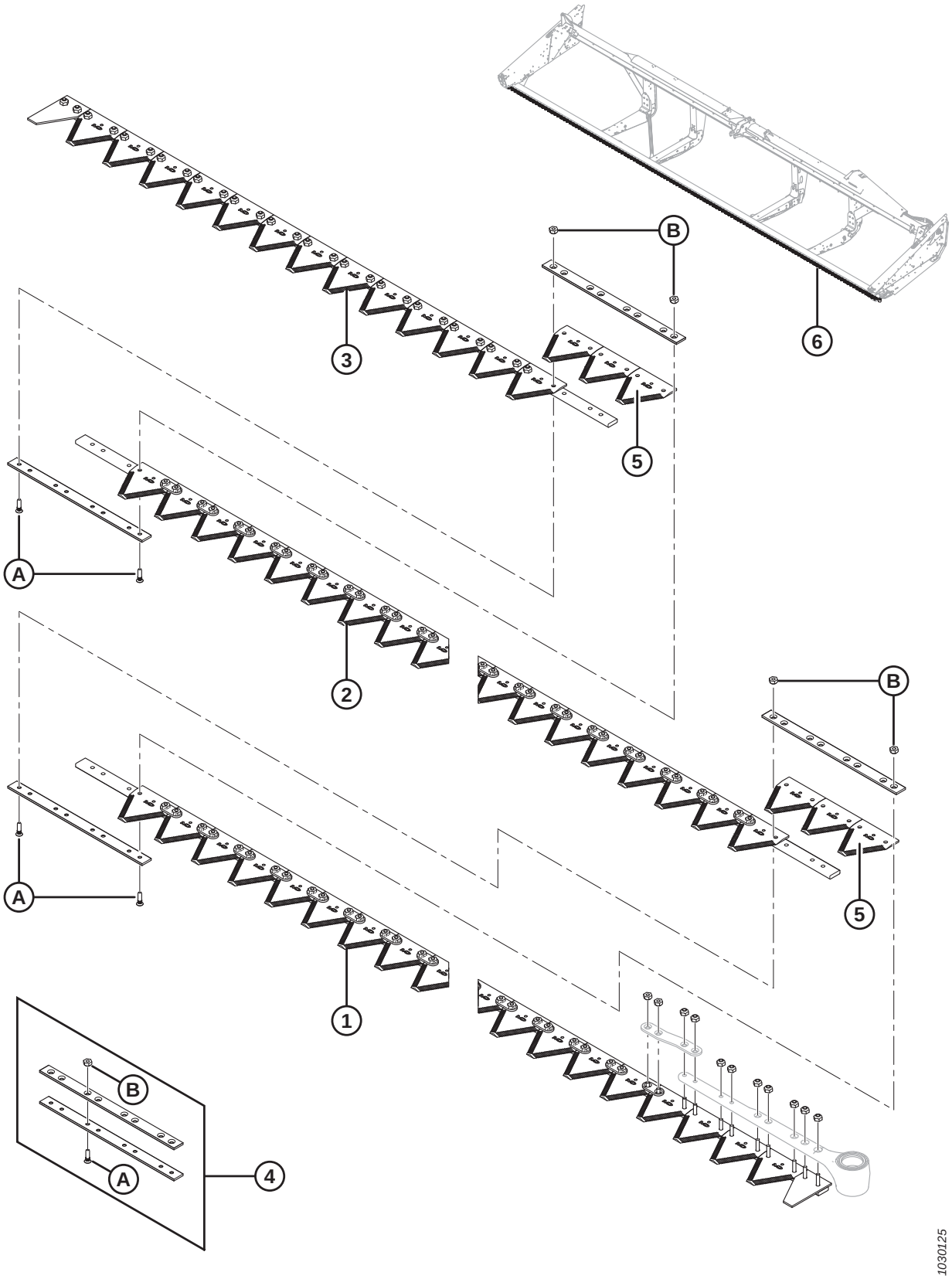

NOTE:

6.1–13.7 m (20–45 ft.) header knives are sold in segments; for a complete segment (less knifehead), refer to tables below:

Ref	Part Number	Description	Qty	Serial Number
		6.1 METER (20 FOOT)		
1	279405	LEFT HEAD SEGMENT	1	
2	279406	CENTER SEGMENT	1	
3	279407	RIGHT, TAIL SEGMENT	1	
4	129043	MACDON SPLICE KIT [51]	2	
5	279641	SECTION – KONDEX COARSE, 9 SPI (25 PACK)	6	
	174845	SECTION – BUSATIS COARSE, 9 SPI (25 PACK)	6	
		7.6 METER (25 FOOT)		
1	279405	LEFT HEAD SEGMENT	1	
2	279406	CENTER SEGMENT	1	
3	279408	RIGHT, TAIL SEGMENT	1	
4	129043	MACDON SPLICE KIT [51]	2	
5	279641	SECTION – KONDEX COARSE, 9 SPI (25 PACK)	6	
	174845	SECTION – BUSATIS COARSE, 9 SPI (25 PACK)	6	
		9.1 METER (30 FOOT)		
1	279405	LEFT HEAD SEGMENT	1	
2	279406	CENTER SEGMENT	2	
3	279409	RIGHT, TAIL SEGMENT	1	
4	129043	MACDON SPLICE KIT [51]	3	
5	279641	SECTION – KONDEX COARSE, 9 SPI (25 PACK)	9	
	174845	SECTION – BUSATIS COARSE, 9 SPI (25 PACK)	9	
6	294795	KIT – 30 FT SINGLE KNIFE [52]	A/R	
		10.7 METER (35 FOOT)		
1	279405	LEFT HEAD SEGMENT	1	
2	279406	CENTER SEGMENT	2	
3	279410	RIGHT, TAIL SEGMENT	1	
4	129043	MACDON SPLICE KIT [51]	3	
5	279641	SECTION – KONDEX COARSE, 9 SPI (25 PACK)	9	
	174845	SECTION – BUSATIS COARSE, 9 SPI (25 PACK)	9	
6	294796	KIT – 35 FT SINGLE KNIFE [53]	A/R	

51. Includes two splice bars and hardware.
52. Kit includes left head segment (MD #279405), center segment (MD #279406), right tail segment (MD #279409), splice kit (MD #129043), and Kondex coarse section (MD #279641).
53. Kit includes left head segment (MD #279405), center segment (MD #279406), right tail segment (MD #279410), splice kit (MD #129043), and Kondex coarse section (MD #279641).

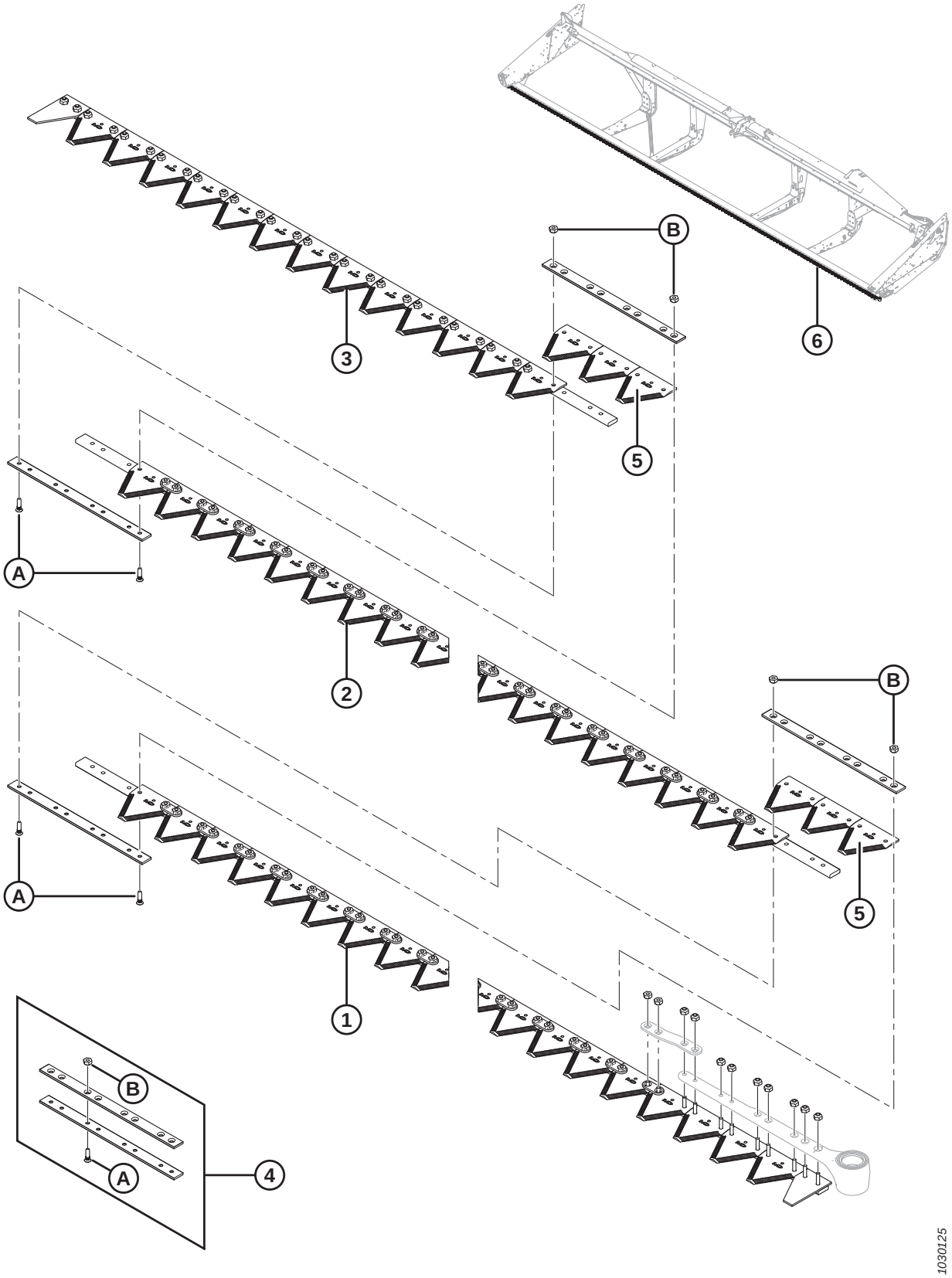
B
6
3
5
A
2
B
A
5
1
B
A
4
1030125

Ref	Part Number	Description	Qty	Serial Number
		12.2 METER (40 FOOT)		
1	279405	LEFT HEAD SEGMENT	1	
2	279406	CENTER SEGMENT	3	
3	279411	RIGHT, TAIL SEGMENT	1	
4	129043	MACDON SPLICE KIT [51]	4	
5	279641	SECTION – KONDEX COARSE, 9 SPI (25 PACK)	12	
	174845	SECTION – BUSATIS COARSE, 9 SPI (25 PACK)	12	
6	294797	KIT – 40 FT SINGLE KNIFE [54]	A/R	
A	129299	SCREW – 90º CSK SKT HD, #12-24 NC X 0.812 IN.		
B	135626	NUT – CSK, CENTER LOCK, #12-24 NC (50 PACK)		

54. Kit includes left head segment (MD #279405), center segment (MD #279406), right tail segment (MD #279411), splice kit (MD #129043), and Kondex coarse section (MD #279641).

10 Segmented Knives – Single-Knife Headers, Ultra Coarse-Tooth Sections

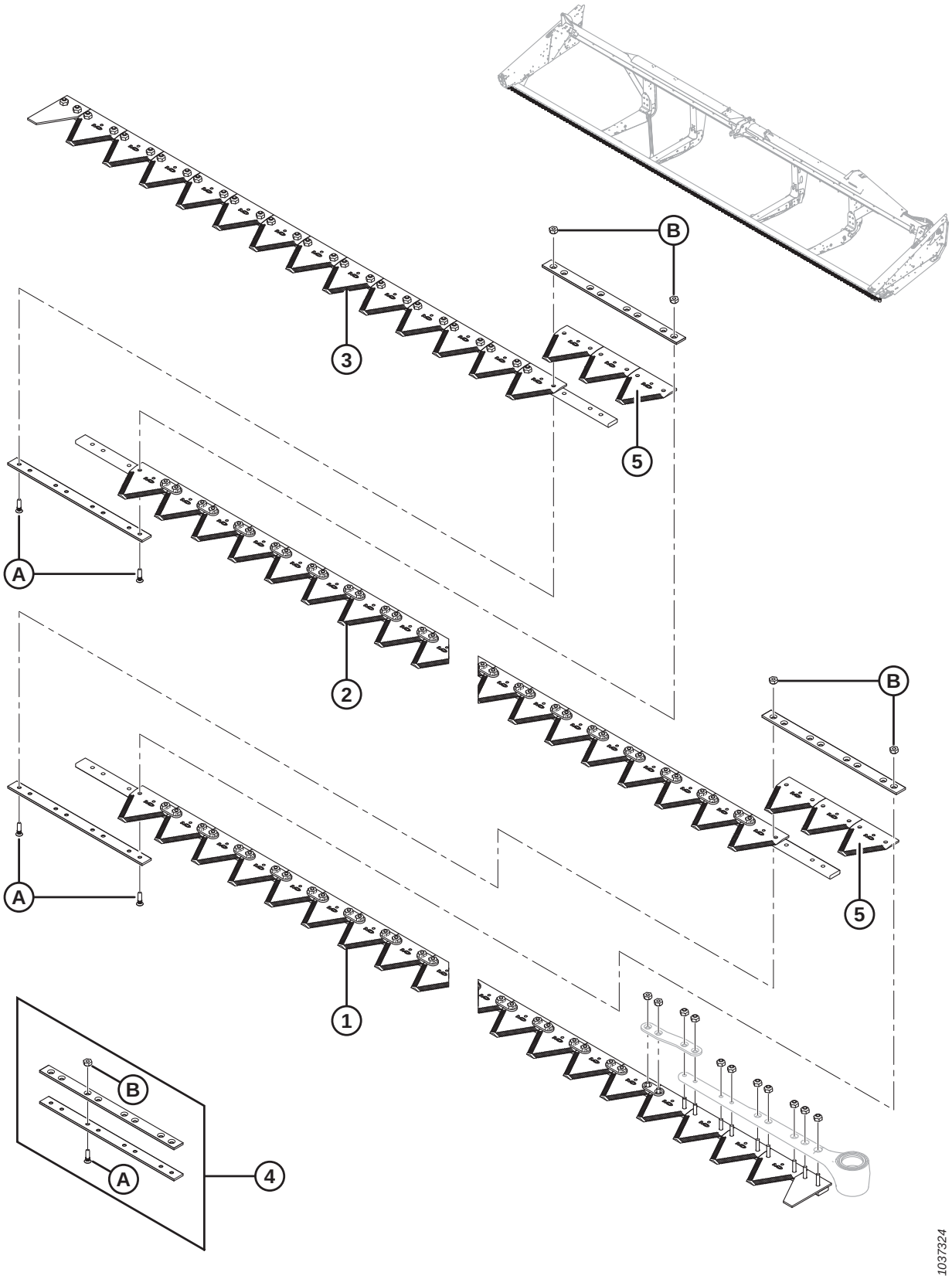

Ref	Part Number	Description	Qty	Serial Number
		7.6 METER (25 FOOT)		
	335513	KIT – 25 FT ULTRA COARSE SINGLE KNIFE [55]		
1	335533	ASSEMBLY – KNIFE SEGMENT ULTRA COARSE[56]	1	
2	335534	ASSEMBLY – KNIFE SEGMENT ULTRA COARSE[56]	1	
3	335535	ASSEMBLY – KNIFE SEGMENT ULTRA COARSE[56]	1	
4	129043	SPLICE KIT [57]	2	
5	294947	SECTION – PACKAGE ULTRA COARSE, 4 SPI	1	
		9.1 METER (30 FOOT)		
	335514	KIT – 30 FT ULTRA COARSE SINGLE KNIFE [55]		
1	335533	ASSEMBLY – KNIFE SEGMENT ULTRA COARSE[56]	1	
2	335534	ASSEMBLY – KNIFE SEGMENT ULTRA COARSE[56]	2	
3	335536	ASSEMBLY – KNIFE SEGMENT 4 SPI[56]	1	
4	129043	SPLICE KIT 2 1/8 IN. [57]	3	
5	294947	SECTION – PACKAGE ULTRA COARSE, 4 SPI	1	
		10.7 METER (35 FOOT)		
	335515	KIT – 35 FT ULTRA COARSE SINGLE KNIFE [55]		
1	335533	ASSEMBLY – KNIFE SEGMENT ULTRA COARSE [56]	1	
2	335534	ASSEMBLY – KNIFE SEGMENT ULTRA COARSE [56]	2	
3	335531	KNIFE SEGMENT, TAIL	1	
4	129043	SPLICE KIT 2 1/8 IN. [57]	3	
5	294947	SECTION – PACKAGE ULTRA COARSE, 4 SPI	1	
		12.2 METER (40 FOOT)		
	335516	KIT – 40 FT ULTRA COARSE SINGLE KNIFE [55]		
1	335533	ASSEMBLY – KNIFE SEGMENT ULTRA COARSE [56]	1	
2	335534	ASSEMBLY – KNIFE SEGMENT ULTRA COARSE [56]	3	
3	335530	KNIFE SEGMENT, TAIL	1	
4	129043	SPLICE KIT 2 1/8 IN. [57]	4	
5	294947	SECTION – PACKAGE ULTRA COARSE, 4 SPI	1	
A	129299	SCREW – 90º CSK SKT HD, #12-24 NC X 0.812 IN.		
B	30669	NUT – CENTER LOCK, #12-24		

55. Complete knife assembly kit.
56. Includes hardware.
57. Includes two splice bars and hardware.

11 Segmented Knives – Double-Knife Headers, Fine-Tooth Sections

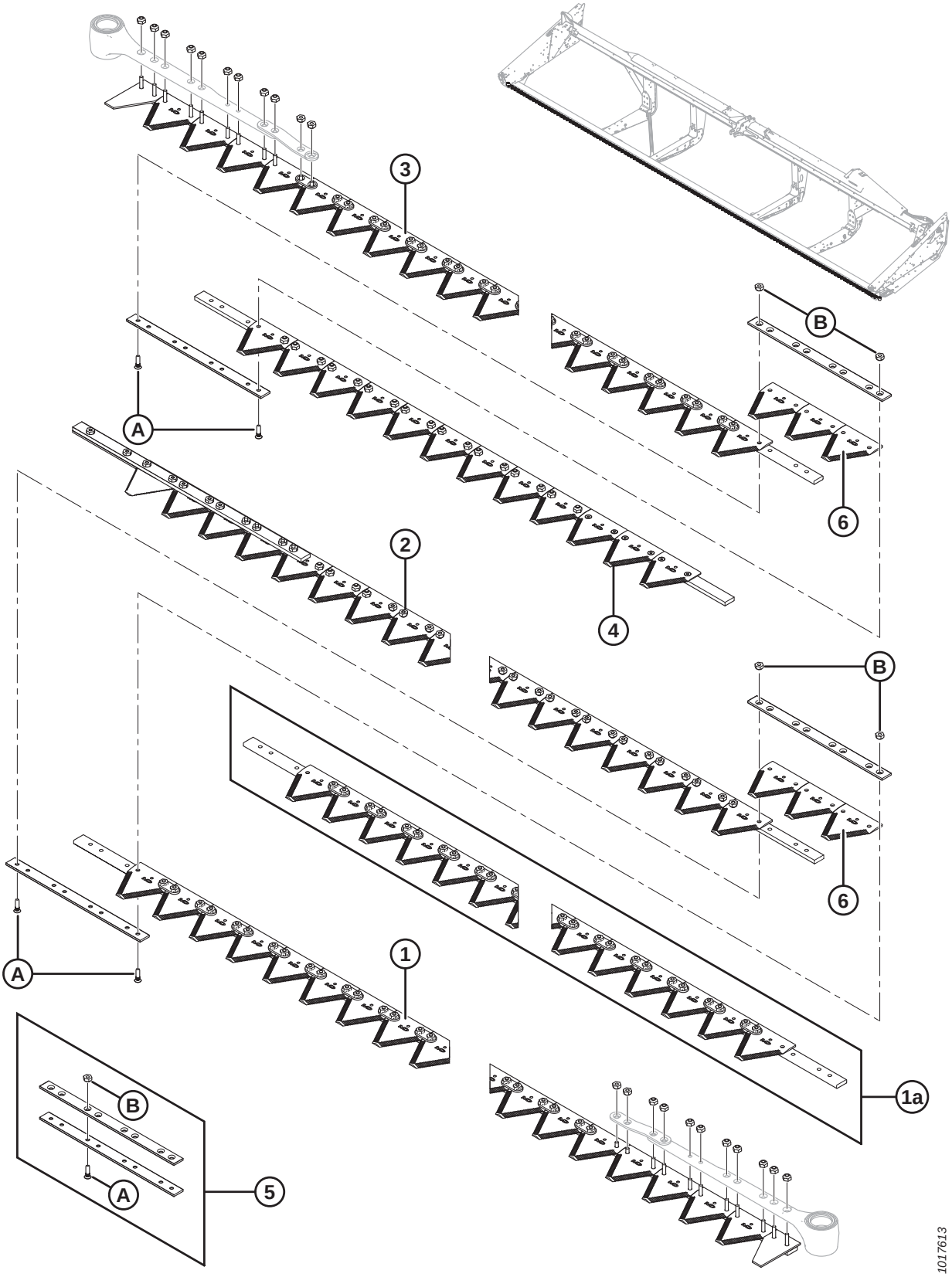

NOTE:

6.1–13.7 m (20–45 ft.) header knives are sold in segments; for a complete segment (less knifehead), refer to tables below:

Ref	Part Number	Description	Qty	Serial Number
		6.1 METER (20 FOOT)		
	335479	KIT – 20 FT FINE DOUBLE KNIFE [58]		
1	279398	LEFT HEAD SEGMENT	1	
2	279413	LEFT TAIL SEGMENT	1	
3	279414	RIGHT COMPLETE	1	
5	129043	MACDON SPLICE KIT [59]	1	
6	279642	SECTION – KONDEX FINE, 14 SPI (25 PACK)	3	
	118491	SECTION – BUSATIS FINE, 14 SPI (25 PACK)	3	
		7.6 METER (25 FOOT)		
	335483	KIT – 25 FT FINE DOUBLE KNIFE [58]		
1	279398	LEFT HEAD SEGMENT	1	
2	279415	LEFT TAIL SEGMENT	1	
3	279412	RIGHT HEAD SEGMENT	1	
4	279416	RIGHT, TAIL SEGMENT	1	
5	129043	MACDON SPLICE KIT [59]	2	
6	279642	SECTION – KONDEX FINE, 14 SPI (25 PACK)	6	
	118491	SECTION – BUSATIS FINE, 14 SPI (25 PACK)	6	
		9.1 METER (30 FOOT)		
	335484	KIT – 30 FT FINE DOUBLE KNIFE [58]		
1	279398	LEFT HEAD SEGMENT	1	
2	279417	LEFT TAIL SEGMENT	1	
3	279412	RIGHT HEAD SEGMENT	1	
4	279418	RIGHT, TAIL SEGMENT	1	
5	129043	MACDON SPLICE KIT [59]	2	
6	279642	SECTION – KONDEX FINE, 14 SPI (25 PACK)	6	
	118491	SECTION – BUSATIS FINE, 14 SPI (25 PACK)	6	

58. Complete knife assembly kit.
59. Includes two splice bars and hardware.

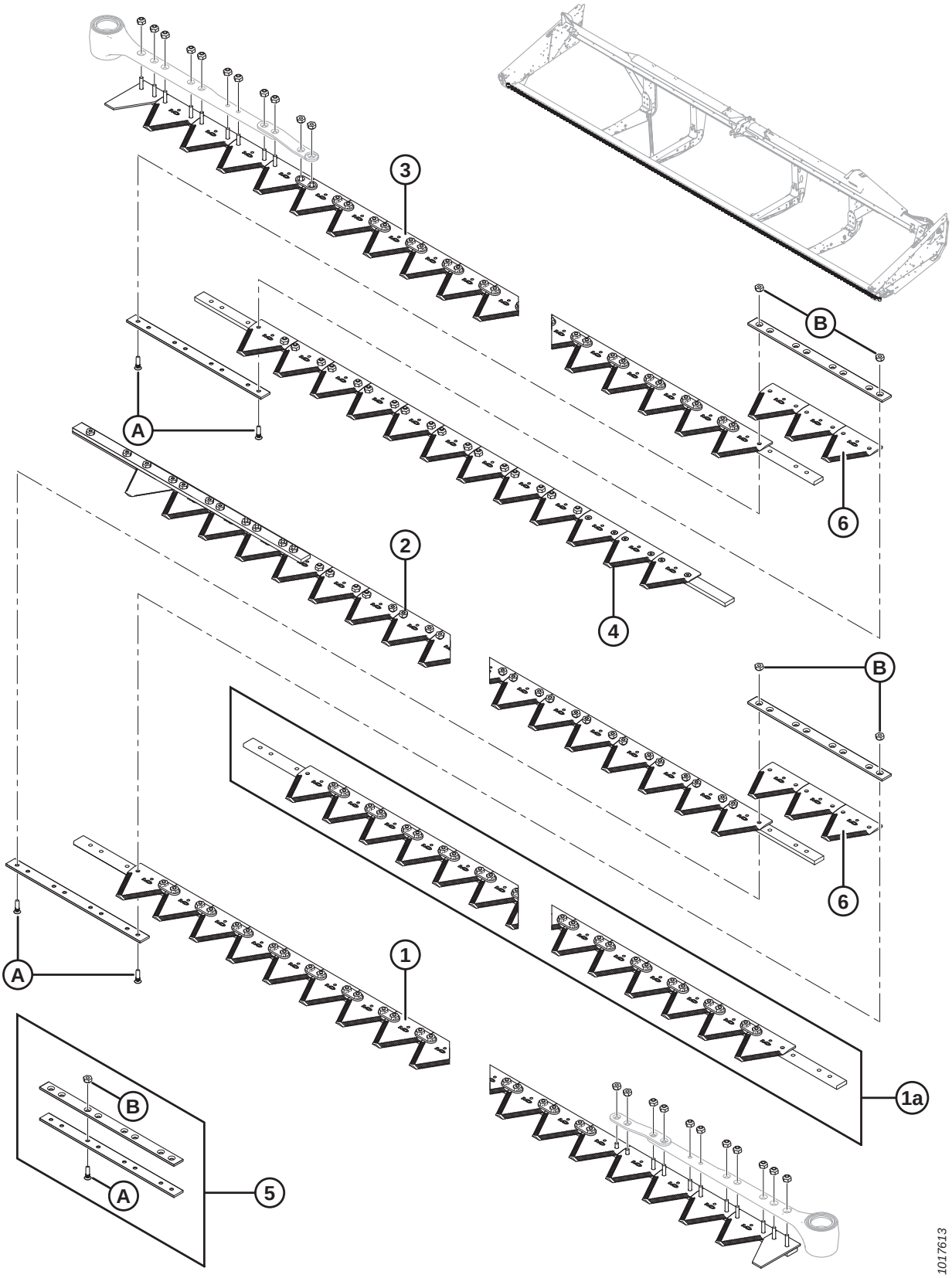
3
B
A
6
2
4
B
6
A
1
1a
B
A
5
1017613

Ref	Part Number	Description	Qty	Serial Number
		10.7 METER (35 FOOT)		
	335485	KIT – 35 FT FINE DOUBLE KNIFE [58]		
1	279398	LEFT HEAD SEGMENT	1	
2	279419	LEFT TAIL SEGMENT	1	
3	279412	RIGHT HEAD SEGMENT	1	
4	279420	RIGHT, TAIL SEGMENT	1	
5	129043	MACDON SPLICE KIT [60]	2	
6	279642	SECTION – KONDEX FINE, 14 SPI (25 PACK)	6	
	118491	SECTION – BUSATIS FINE, 14 SPI (25 PACK)	6	
		12.2 METER (40 FOOT)		
	335486	KIT – 40 FT FINE DOUBLE KNIFE [58]		
1	279398	LEFT HEAD SEGMENT	1	
1a	279399	CENTER SEGMENT	2	
2	279421	LEFT TAIL SEGMENT	1	
3	279412	RIGHT HEAD SEGMENT	1	
4	279422	RIGHT, TAIL SEGMENT	1	
5	129043	MACDON SPLICE KIT [60]	4	
6	279642	SECTION – KONDEX FINE, 14 SPI (25 PACK)	12	
	118491	SECTION – BUSATIS FINE, 14 SPI (25 PACK)	12	
		13.7 METER (45 FOOT)		
	335487	KIT – 45 FT FINE DOUBLE KNIFE [58]		
1	279398	LEFT HEAD SEGMENT	1	
1a	279399	CENTER SEGMENT	2	
2	279423	LEFT TAIL SEGMENT	1	
3	279412	RIGHT HEAD SEGMENT	1	
4	279424	RIGHT, TAIL SEGMENT	1	
5	129043	MACDON SPLICE KIT [60]	4	
6	279642	SECTION – KONDEX FINE, 14 SPI (25 PACK)	12	
	118491	SECTION – BUSATIS FINE, 14 SPI (25 PACK)	12	
A	129299	SCREW – 90º CSK SKT HD, #12-24 NC X 0.812 IN.		
B	135626	NUT – CSK, CENTER LOCK, #12-24 NC (50 PACK)		

60. Includes two splice bars and hardware.

12 Segmented Knives – Double-Knife Headers, Coarse-Tooth Sections

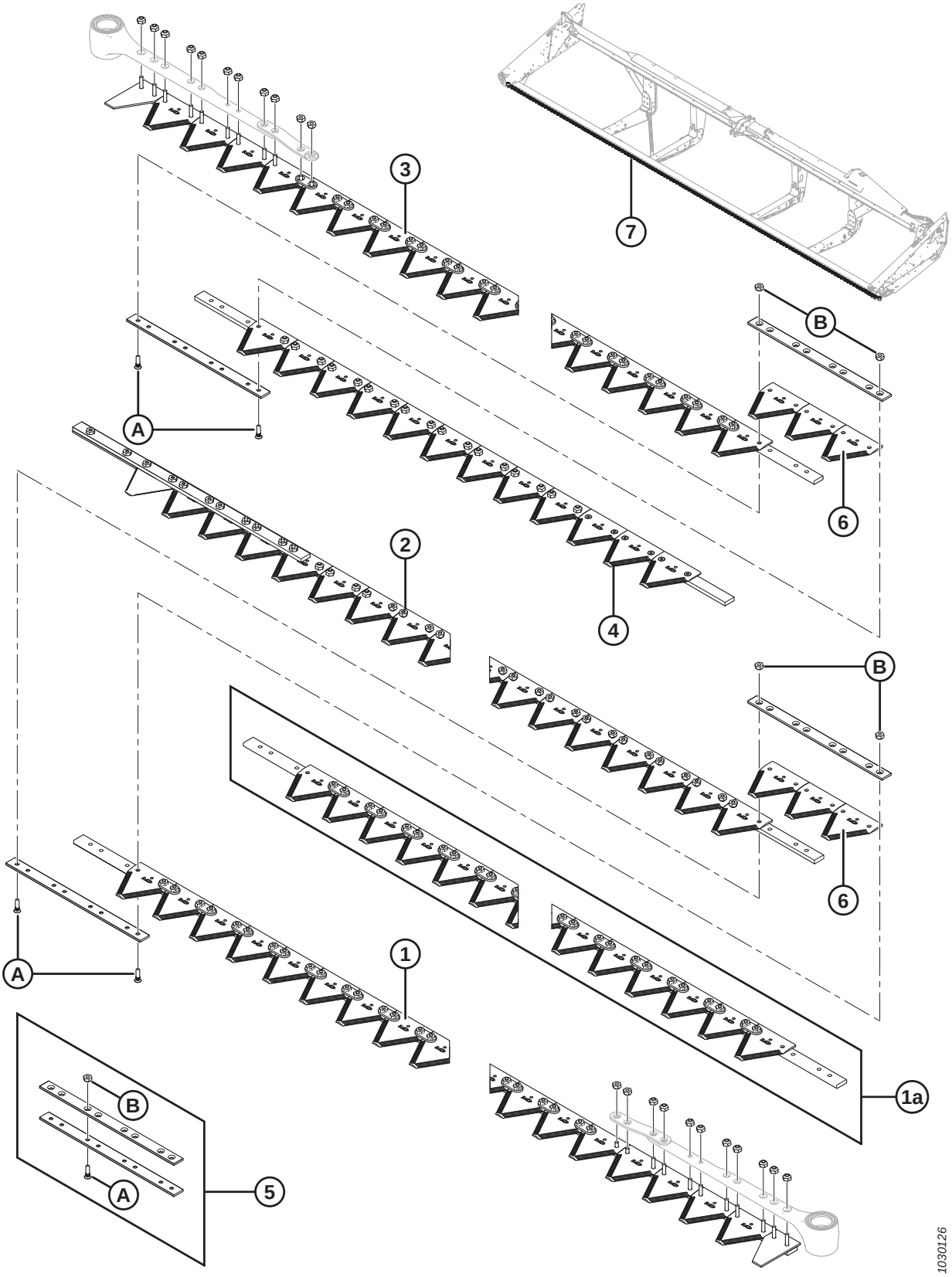

NOTE:

6.1–13.7 m (20–45 ft.) header knives are sold in segments; for a complete segment (less knifehead), refer to tables below:

Ref	Part Number	Description	Qty	Serial Number
		6.1 METER (20 FOOT)		
1	279405	LEFT HEAD SEGMENT	1	
2	279425	LEFT TAIL SEGMENT	1	
3	279426	RIGHT COMPLETE	1	
5	129043	MACDON SPLICE KIT [61]	1	
6	279641	SECTION – KONDEX COARSE, 9 SPI (25 PACK)	3	
	174845	SECTION – BUSATIS COARSE, 9 SPI (25 PACK)	3	
		7.6 METER (25 FOOT)		
1	279405	LEFT HEAD SEGMENT	1	
2	279427	LEFT TAIL SEGMENT	1	
3	279428	RIGHT HEAD SEGMENT	1	
4	279429	RIGHT, TAIL SEGMENT	1	
5	129043	MACDON SPLICE KIT [61]	2	
6	279641	SECTION – KONDEX COARSE, 9 SPI (25 PACK)	6	
	174845	SECTION – BUSATIS COARSE, 9 SPI (25 PACK)	6	
		9.1 METER (30 FOOT)		
1	279405	LEFT HEAD SEGMENT	1	
2	279430	LEFT TAIL SEGMENT	1	
3	279428	RIGHT HEAD SEGMENT	1	
4	279432	RIGHT, TAIL SEGMENT	1	
5	129043	MACDON SPLICE KIT [61]	2	
6	279641	SECTION – KONDEX COARSE, 9 SPI (25 PACK)	6	
	174845	SECTION – BUSATIS COARSE, 9 SPI (25 PACK)	6	
7	294791	KIT – 30 FT DOUBLE KNIFE [62]	A/R	
		10.7 METER (35 FOOT)		
1	279405	LEFT HEAD SEGMENT	1	
2	279431	LEFT TAIL SEGMENT	1	
3	279428	RIGHT HEAD SEGMENT	1	
4	279433	RIGHT, TAIL SEGMENT	1	
5	129043	MACDON SPLICE KIT [61]	2	
6	279641	SECTION – KONDEX COARSE, 9 SPI (25 PACK)	6	
	174845	SECTION – BUSATIS COARSE, 9 SPI (25 PACK)	6	
7	294792	KIT – 35 FT DOUBLE KNIFE [63]	A/R	

61. Includes two splice bars and hardware.
62. Kit includes left head segment (MD #279405), left tail segment (MD #279430), right head segment (MD #279428), right tail segment (MD #279432), splice kit (MD #129043), and Kondex coarse section (MD #279641).
63. Kit includes left head segment (MD #279405), left tail segment (MD #279431), right head segment (MD #279428), right tail segment (MD #279433), splice kit (MD #129043), and Kondex coarse section (MD #279641).

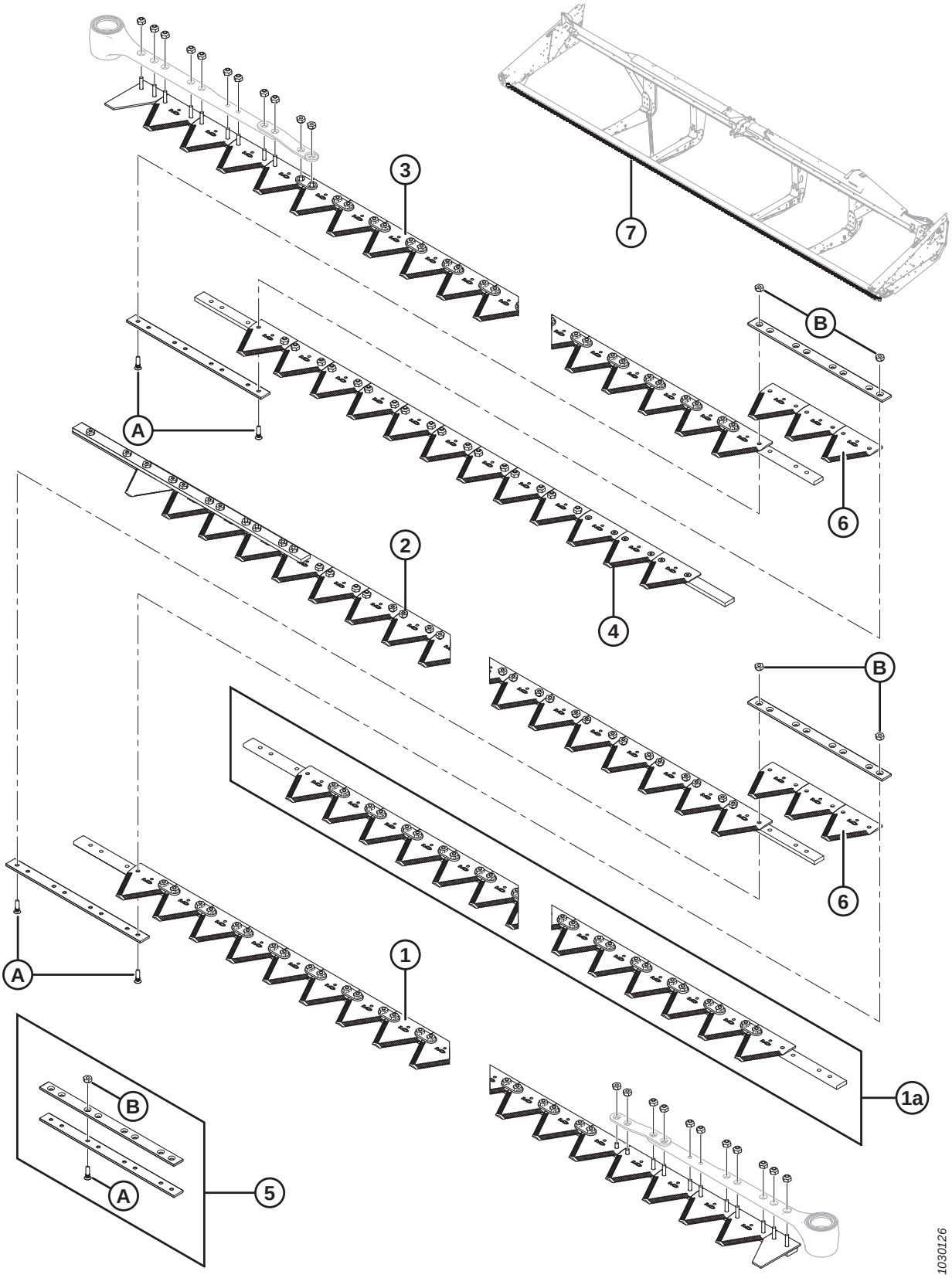
3
7
B
A
6
2
4
B
6
A
1
1a
B
A
5
1030126

Ref	Part Number	Description	Qty	Serial Number
		12.2 METER (40 FOOT)		
1	279405	LEFT HEAD SEGMENT	1	
1a	279406	CENTER SEGMENT	2	
2	279434	LEFT TAIL SEGMENT	1	
3	279428	RIGHT HEAD SEGMENT	1	
4	279435	RIGHT, TAIL SEGMENT	1	
5	129043	MACDON SPLICE KIT [61]	4	
6	279641	SECTION – KONDEX COARSE, 9 SPI (25 PACK)	12	
	174845	SECTION – BUSATIS COARSE, 9 SPI (25 PACK)	12	
7	294793	KIT – 40 FT DOUBLE KNIFE [64]	A/R	
		13.7 METER (45 FOOT)		
1	279405	LEFT HEAD SEGMENT	1	
1a	279406	CENTER SEGMENT	2	
2	279436	LEFT TAIL SEGMENT	1	
3	279428	RIGHT HEAD SEGMENT	1	
4	279437	RIGHT, TAIL SEGMENT	1	
5	129043	MACDON SPLICE KIT [61]	4	
6	279641	SECTION – KONDEX COARSE, 9 SPI (25 PACK)	12	
	174845	SECTION – BUSATIS COARSE, 9 SPI (25 PACK)	12	
7	294794	KIT – 45 FT DOUBLE KNIFE [65]	A/R	
A	129299	SCREW – 90º CSK SKT HD, #12-24 NC X 0.812 IN.		
B	135626	NUT – CSK, CENTER LOCK, #12-24 NC (50 PACK)		

64. Kit includes left head segment (MD #279405), center segment (MD #279406), left tail segment (MD #279434), right head segment (MD #279428), right tail segment (MD #279435), splice kit (MD #129043), and Kondex coarse section (MD #279641).
65. Kit includes left head segment (MD #279405), center segment (MD #279406), left tail segment (MD #279436), right head segment (MD #279428), right tail segment (MD #279437), splice kit (MD #129043), and Kondex coarse section (MD #279641).

13 Segmented Knives – Double-Knife Headers, Ultra Coarse-Tooth Sections

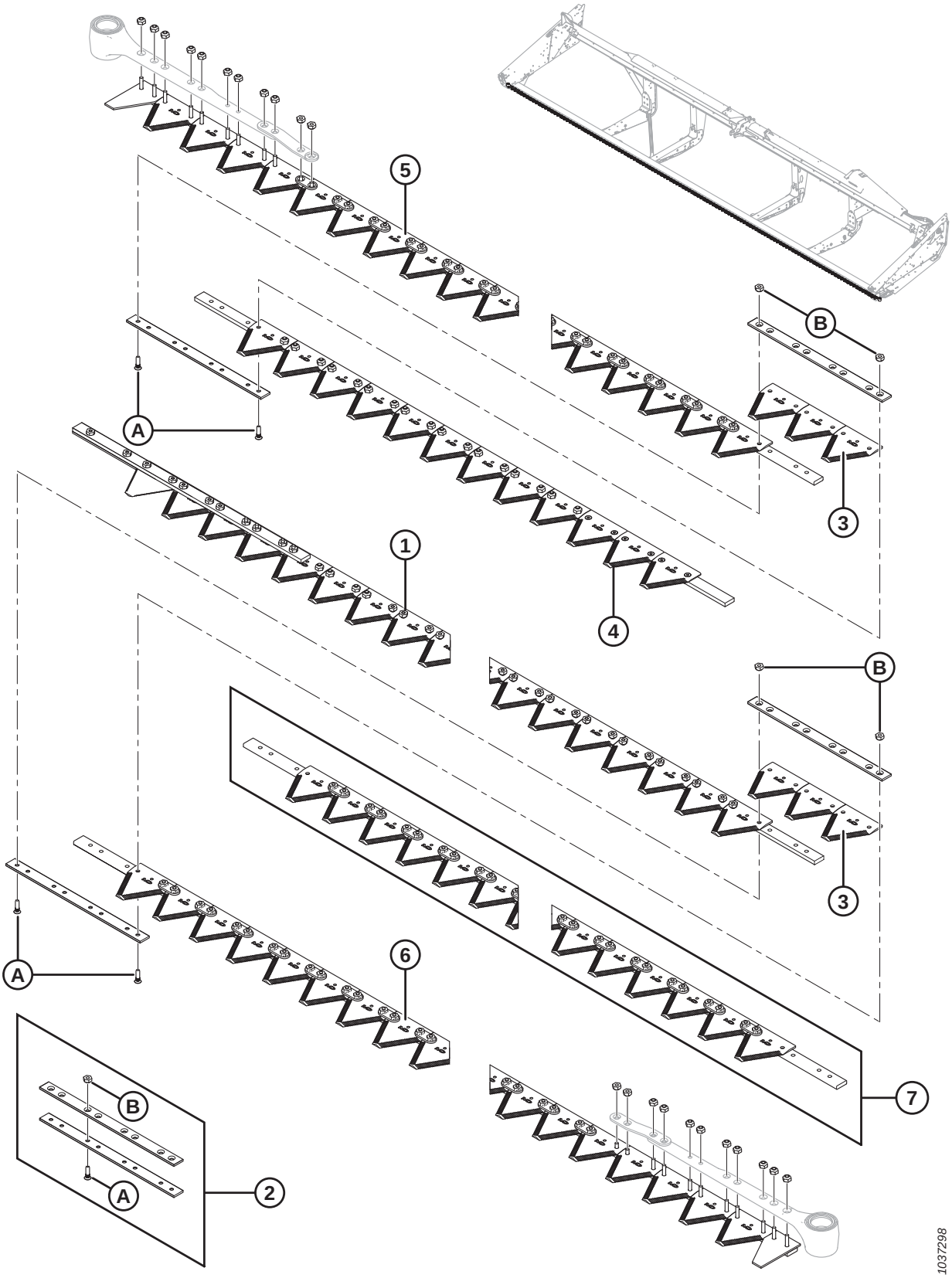

Ref	Part Number	Description	Qty	Serial Number
		7.6 METER (25 FOOT)		
	335508	KIT – 25 FT ULTRA COARSE DOUBLE KNIFE [66]		
1	335525	LEFT TAIL SEGMENT	1	
2	129043	SPLICE KIT 2 1/8 IN. [67]	2	
3	294947	SECTION – PACKAGE ULTRA COARSE, 4 SPI	1	
4	335520	RIGHT, TAIL SEGMENT	1	
5	335532	ASSEMBLY KNIFE SEG ULTRA COARSE [68]	1	
6	335533	ASSEMBLY KNIFE SEG ULTRA COARSE [68]	1	
		9.1 METER (30 FOOT)		
	335509	KIT – 30 FT ULTRA COARSE DOUBLE KNIFE [66]		
1	335526	LEFT TAIL SEGMENT	1	
2	129043	SPLICE KIT 2 1/8 IN. [67]	2	
3	294947	SECTION – PACKAGE ULTRA COARSE, 4 SPI	1	
4	335522	RIGHT, TAIL SEGMENT		
5	335532	ASSEMBLY KNIFE SEG ULTRA COARSE [68]	1	
6	335533	ASSEMBLY KNIFE SEG ULTRA COARSE [68]	1	
		10.7 METER (35 FOOT)		
	335510	KIT – 35 FT ULTRA COARSE DOUBLE KNIFE [66]		
1	335529	LEFT TAIL SEGMENT	1	
2	129043	SPLICE KIT 2 1/8 IN. [67]	2	
3	294947	SECTION – PACKAGE ULTRA COARSE, 4 SPI	1	
4	335523	RIGHT, TAIL SEGMENT	1	
5	335532	ASSEMBLY KNIFE SEG ULTRA COARSE [68]	1	
6	335533	ASSEMBLY KNIFE SEG ULTRA COARSE [68]	1	
		12.2 METER (40 FOOT)		
	335511	KIT – 40 FT ULTRA COARSE DOUBLE KNIFE [66]		
1	335527	LEFT, TAIL SEGMENT	1	
2	129043	SPLICE KIT 2 1/8 IN. [67]	4	
3	294947	SECTION – PACKAGE ULTRA COARSE, 4 SPI	1	
4	335519	RIGHT, TAIL SEGMENT	1	
5	335532	ASSEMBLY KNIFE SEG ULTRA COARSE [68]	1	
6	335533	ASSEMBLY KNIFE SEG ULTRA COARSE [68]	1	
7	335534	ASSEMBLY KNIFE SEG ULTRA COARSE [68]	2	

66. Complete knife assembly kit.
67. Includes two splice bars and hardware.
68. Includes hardware.

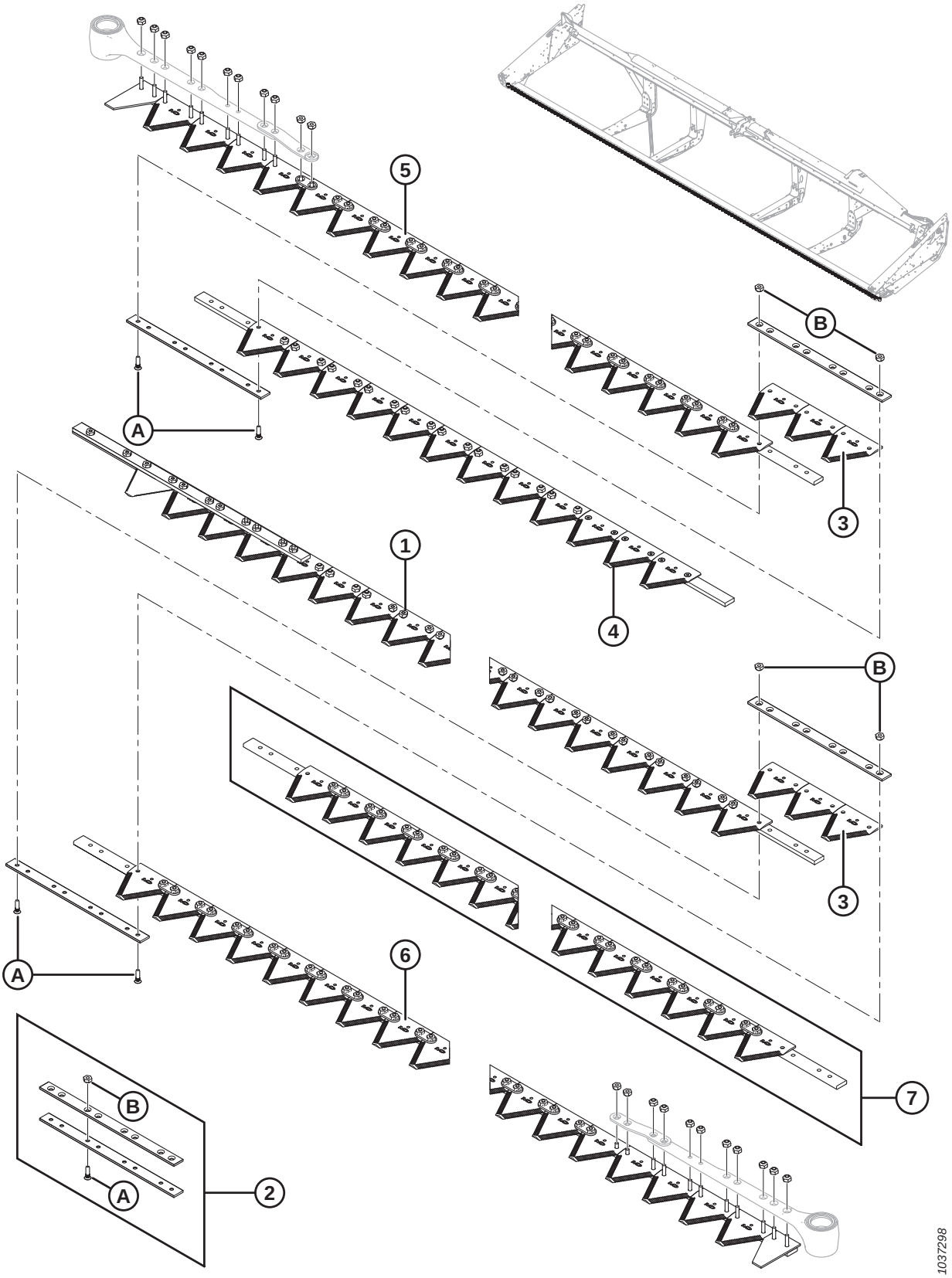
5
B
A
3
1
4
B
3
A
6
7
B
A
2
1037298

Ref	Part Number	Description	Qty	Serial Number
		13.7 METER (45 FOOT)		
	335512	KIT – 45 FT ULTRA COARSE DOUBLE KNIFE [66]		
1	335528	LEFT, TAIL SEGMENT	1	
2	129043	SPLICE KIT 2 1/8 IN. [67]	2	
3	294947	SECTION – PACKAGE ULTRA COARSE, 4 SPI	1	
4	335521	RIGHT, TAIL SEGMENT	1	
5	335532	ASSEMBLY KNIFE SEG ULTRA COARSE [68]	1	
6	335533	ASSEMBLY KNIFE SEG ULTRA COARSE [68]	1	
7	335534	ASSEMBLY KNIFE SEG ULTRA COARSE [68]	2	
A	129299	SCREW – 90º CSK SKT HD, #12-24 NC X 0.812 IN.		
B	30669	NUT – CENTER LOCK, #12-24		

14 Knife Drive – Single-Knife and Untimed Double-Knife Headers

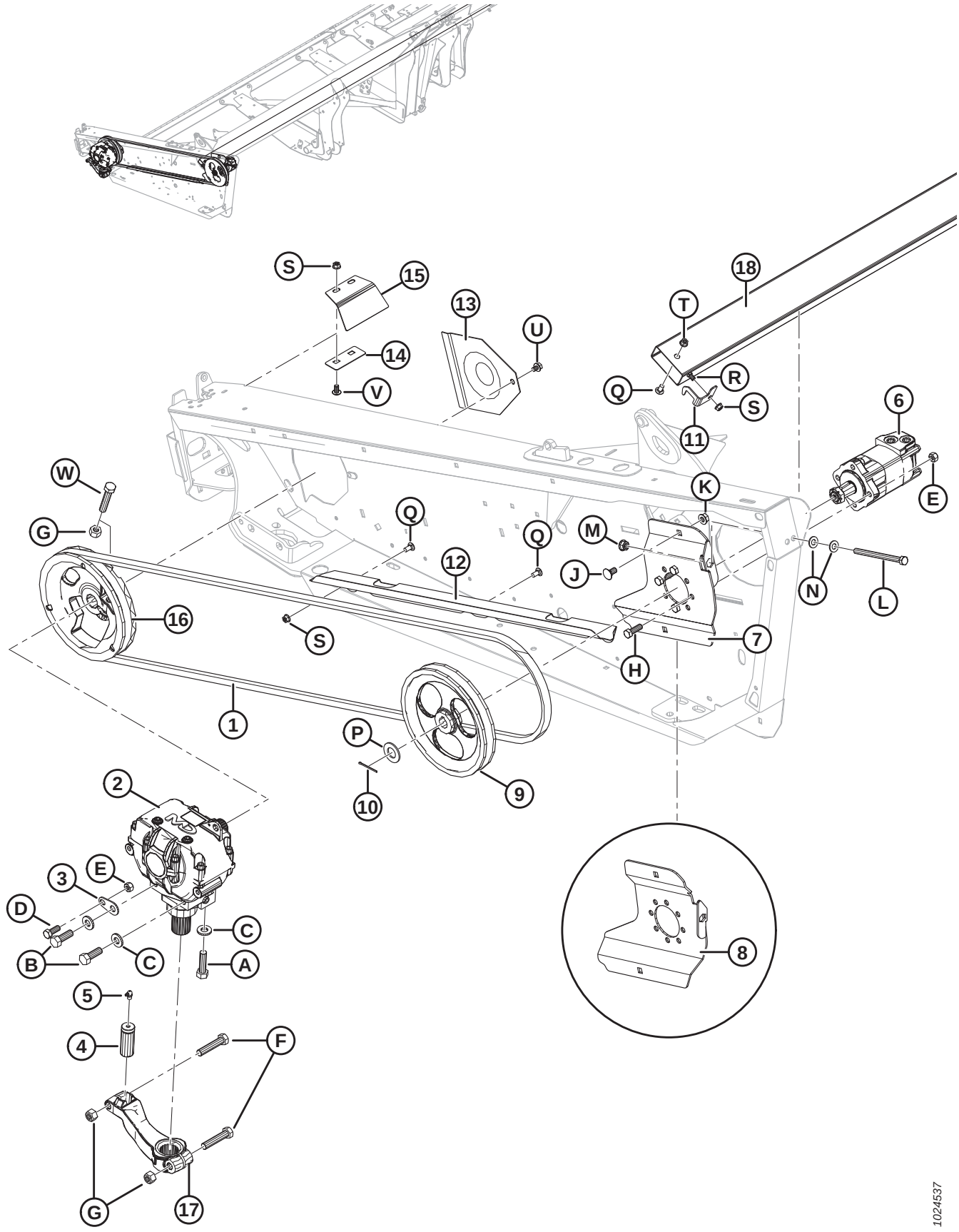

Ref	Part Number	Description	Qty	Serial Number
1	145706	BELT – SK DRIVE [69]	1	
2	100532	DRIVE – WOBBLE BOX [70]	1	
3	132033	PLATE – WOBBLE BOX LOCATING TAB [69]	1	
4	113229	PIN – SICKLE HEAD [69]	1	
5	21194	FITTING – LUBRICATION 90° 1/8 NPT [69]	1	
6	174217	MOTOR – KNIFE DRIVE [69]	1	
	174304	SEAL KIT		
7	294112	BRACKET – MOTOR MOUNT, WELDT	1	
8	174270	BRACKET – MOTOR MOUNT, WELDT RH DK	1	
9	174215	PULLEY – SK DRIVE [69]	1	
10	21006	PIN – COTTER 1/8 DIA X 2.0 ZP [69]	1	
11	125530	BRACKET – LH KNIFE KEEPER	1	
12	245943	GUIDE – BELT [69]	1	
13	102509	SHIELD [69]	1	
14	120141	RETAINER – WOBBLE BOX SHIELD [69]	1	
15	120140	SHIELD – LH WOBBLE BOX MOUNT	1	
	120194	SHIELD – RH WOBBLE BOX MOUNT	1	
16	252752	PULLEY ASSY – WOBBLE BOX SK [69]	1	
17	174992	ARM – WOBBLE BOX DRIVE [69]	1	
18	220009	TUBE – KNIFE STORAGE, 20 FT [71]	1	
	220010	TUBE – KNIFE STORAGE, 25 FT [71]	1	
	220011	TUBE – KNIFE STORAGE, 30 FT [71]	1	
	220012	TUBE – KNIFE STORAGE, 35 FT [71]	1	
	220013	TUBE – KNIFE STORAGE, 40 FT [71]	1	
	125764	TUBE – KNIFE STORAGE, 40 AND 45 FT DK [71]	1	
A	120900	BOLT – HEX HEAD - L9 5/8-11 UNC X 2.25 LG		
B	120899	BOLT – HEX HEAD - L9 5/8-11 UNC X 1.75 LG		
C	120901	WASHER – FLAT HARDENED 5/8 IN. NOMINAL (L9)		
D	21491	BOLT – HH 1/2 NC X 1.25 LG GR 5 ZP		
E	18697	NUT – HEX LOCK DT .500-13 UNC		
F	21583	BOLT – HH 5/8 NC X 3.0 LG GR 5 ZP		
G	18666	NUT – HEX LOCK DT 5/8-11 UNC ZP		
H	18723	BOLT – HH 1/2 NC X 1.5 LG GR 5 ZP		
J	21066	BOLT – RHSN 1/2 NC X 1 GR 5 ZP		
K	50186	NUT – FLG LOCK SM FACE DT 0.500-13 UNC GR 5		
L	50226	BOLT – HH 1/2 NC X 6.5 TFL GR 5 ZP		
M	21383	NUT – FLANGE .500-13 UNC (SER FACE)		
N	18599	WASHER – SAE FLAT 17/32 I.D. X 1-1/16 IN. O.D. ZP		
P	18603	WASHER – SAE FLAT 1-1/16 I.D. X 2.0 IN. O.D. ZP		

69. For untimed double-knife drive headers, quantity is two.
70. For untimed double-knife drive headers, quantity is two. For repair parts, refer to Section *16 Knife Drive Box, page 57*.
71. Knife storage tube located inside round backtube of header frame.

KNIFE DRIVE – SINGLE-KNIFE AND UNTIMED DOUBLE-KNIFE HEADERS

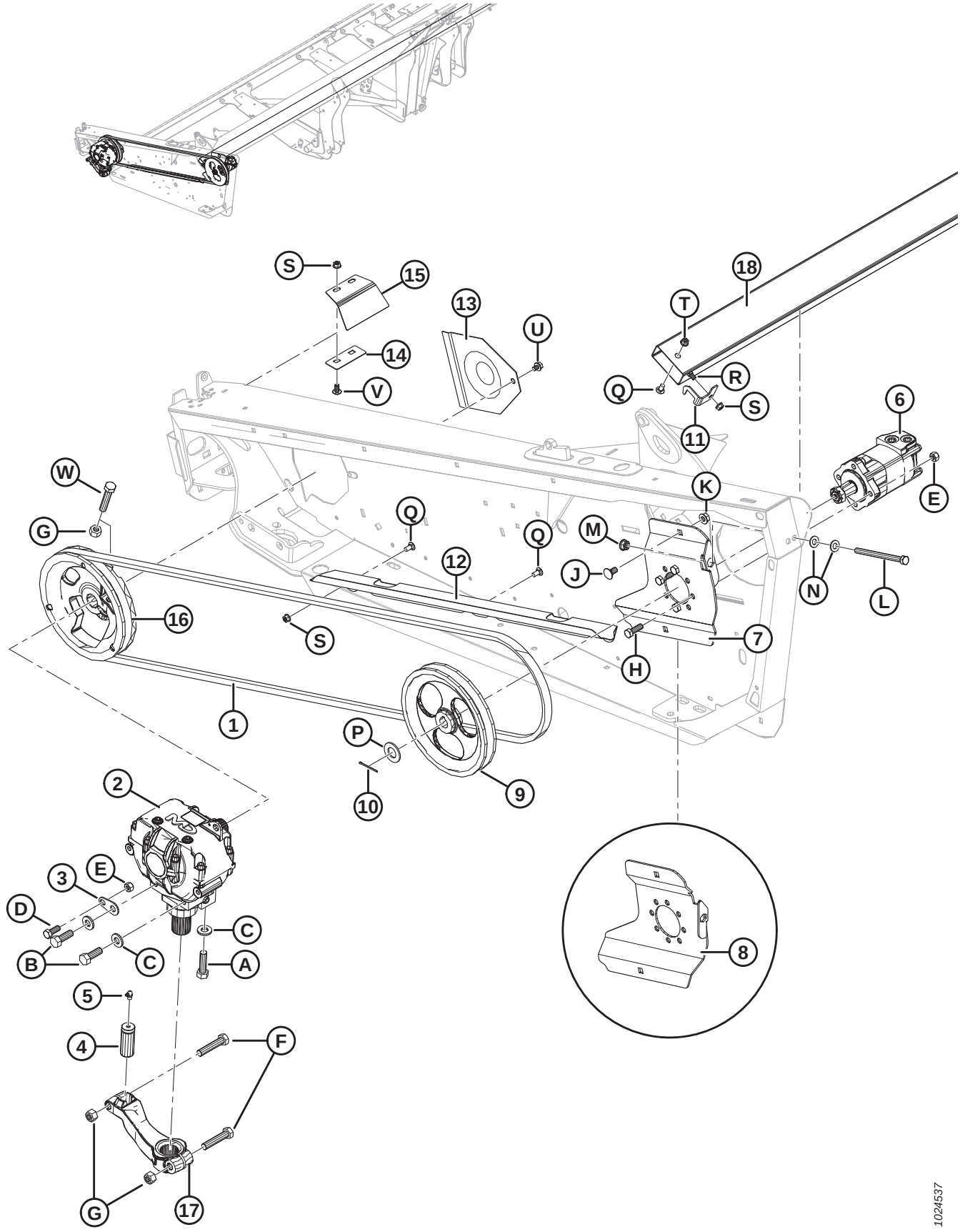

Ref	Part Number	Description	Qty	Serial Number
Q	21863	BOLT – RHSSN 3/8 NC X 0.75 LG GR 5 ZP		
R	21472	BOLT – RHSN 3/8 NC X 0.75 GR 5 ZP		
S	30228	NUT – FLANGE DT SMOOTH FACE 0.375-16 UNC		
T	21452	NUT – FLANGE (SER FACE) .375-16 UNC		
U	30693	BOLT – FLANGE (SER FACE) .375-16 UNC X 0.50 LG		
V	135157	SCREW – MACHINE		
W	21406	BOLT – HH 5/8 NC X 3.5 GR 5 ZP		

15 Knife Drive – Timed Double-Knife Headers

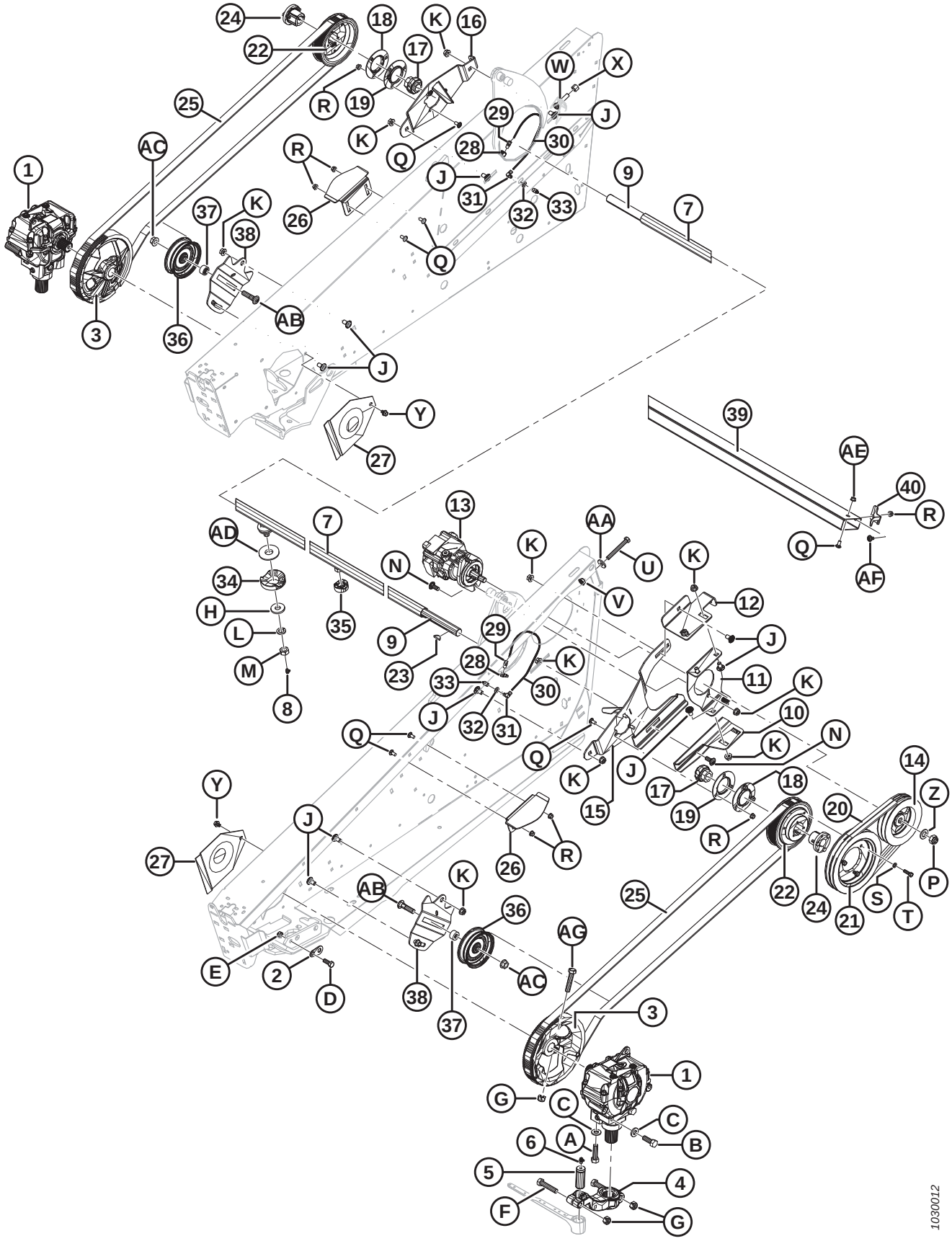

Ref	Part Number	Description	Qty	Serial Number
1	100532	DRIVE – SICKLE [72]	2	
2	132033	PLATE – KNIFE DRIVE, LOCATING TAB	2	
3	252753	PULLEY ASSY – KNIFE DRIVE [73]	2	
4	174992	ARM – OUTPUT	2	
5	113229	PIN – SICKLE HEAD	2	
6	21194	FITTING – LUBE, 90°, 1/8 NPT	2	
7	120754	TUBE – CROSS SHAFT (20 FT HEADER)	1	
	113160	TUBE – CROSS SHAFT (25 FT HEADER)	1	
	113161	TUBE – CROSS SHAFT (30 FT HEADER)	1	
	120755	TUBE – CROSS SHAFT (35 FT HEADER)	1	
8	21010	FITTING – LUBE, 90°, 1/4 NPT	2	
9	120364	SHAFT – CROSS (20 FT HEADER)	1	
	120358	SHAFT – CROSS (25 FT HEADER)	1	
	120359	SHAFT – CROSS (30 FT HEADER)	1	
	120360	SHAFT – CROSS (35 FT HEADER)	1	
10	172809	SUPPORT – LOWER MOTOR	1	
11	294385	SUPPORT – MOTOR MOUNT	1	
12	172812	SUPPORT – DRIVE	1	
13	232147	MOTOR – HYDRAULIC, KNIFE DRIVE, C/W KEY	1	
	279003	SEAL KIT – KNIFE DRIVE MOTOR		
	111895	KEY – SQUARE, KNIFE DRIVE MOTOR		
14	120812	PULLEY – DRIVE, DOUBLE (20–25 FT HEADERS ONLY)	1	
	145384	PULLEY – DRIVE, DOUBLE (30–35 FT HEADERS ONLY)	1	
15	174502	SUPPORT – PULLEY (LH)	1	
16	174501	SUPPORT – PULLEY (RH)	1	
17	21859	BEARING – CROSS SHAFT, 1-3/16 IN. BORE	2	
18	49306	FLANGE – OUTER	2	
19	47858	FLANGE – INNER	2	
20	120814	BELT – TIMING, DOUBLE (20–25 FT HEADERS ONLY)	1	
	120057	BELT – TIMING, DOUBLE (30–35 FT HEADERS ONLY)	1	
21	101853	PULLEY – MACHINED	1	
22	120056	SPROCKET – TIMING (72 TEETH)	2	
23	13298	KEY – WOODRUFF, CROSS SHAFT, 1/4 X 1-1/8 IN.	2	
24	30034	BUSHING – TAPER LOCK, CROSS SHAFT	2	
25	30548	BELT – TIMING	2	
26	132415	GUIDE – BELT	2	
27	102509	SHIELD – DRIVE BOX	2	
28	50187	FITTING – LUBE, ELBOW ADAPTER	2	
29	120366	FITTING – CONNECTOR	2	
30	112968	HOSE – GREASE	2	

72. Refer to Section *16 Knife Drive Box, page 57*.
73. Includes bolt (MD #21406) and nut (MD #18666).

KNIFE DRIVE – TIMED DOUBLE-KNIFE HEADERS

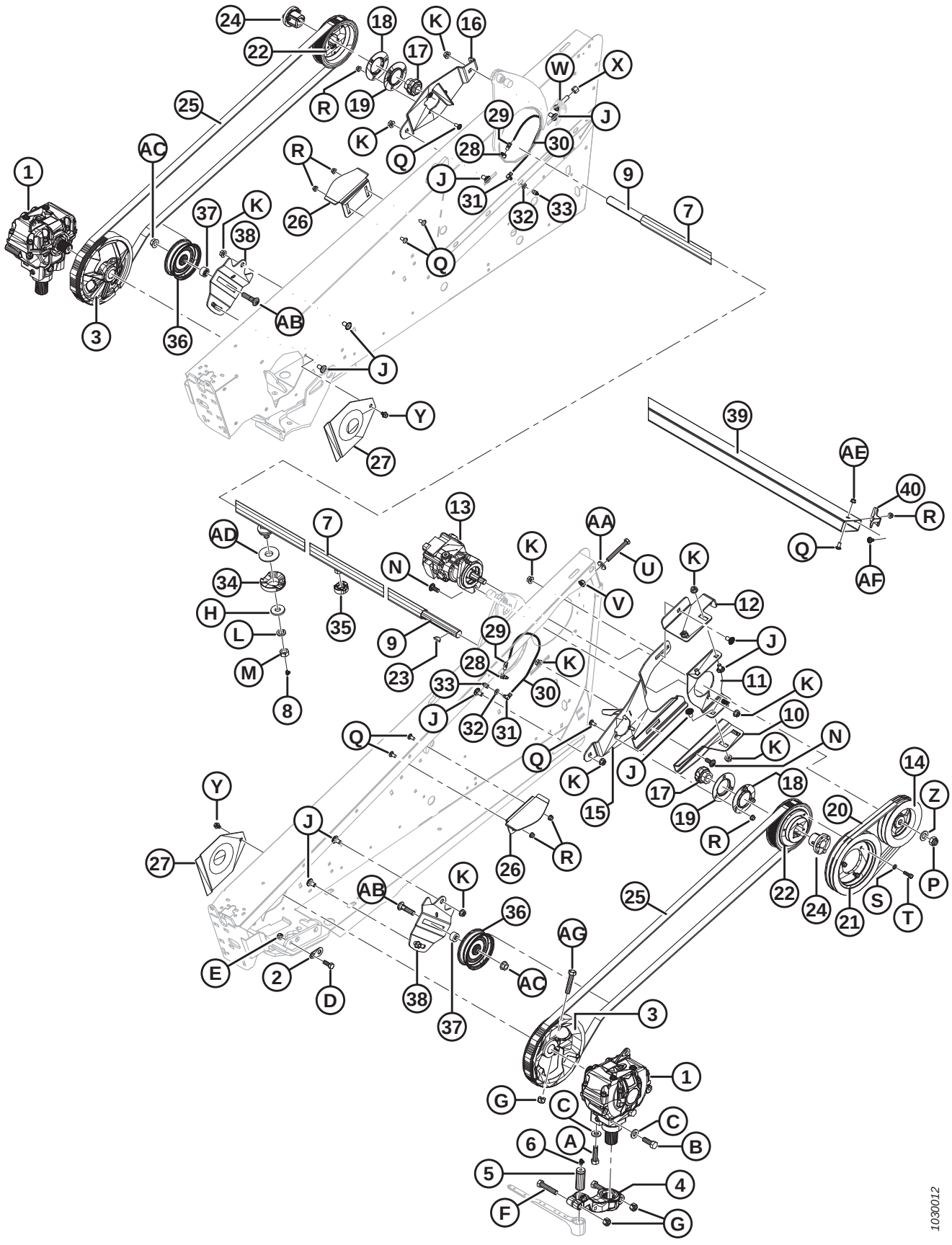

Ref	Part Number	Description	Qty	Serial Number
31	120365	FITTING – ELBOW	2	
32	18598	WASHER – FLAT, 13/32 INCH I.D.	2	
33	50188	FITTING – LUBE, 1/8 NPT FEMALE	2	
34	220701	BLOCK – FOAM	2	
35	220706	BLOCK – FOAM [74]		
36	30514	PULLEY – IDLER	2	
37	253517	SPACER – PULLEY	2	
38	226673	SUPPORT – IDLER PULLEY	2	
39	220009	TUBE – KNIFE STORAGE (20 FT) [75]	1	
	220010	TUBE – KNIFE STORAGE (25 FT) [75]	1	
	220011	TUBE – KNIFE STORAGE (30 FT) [75]	1	
	220012	TUBE – KNIFE STORAGE (35 FT) [75]	1	
	220013	TUBE – KNIFE STORAGE (40 FT) [75]	1	
	125764	TUBE – KNIFE STORAGE (40–45 FT DK) [75]		
40	125530	BRACKET – KNIFE KEEPER	1	
A	120900	BOLT – HEX HEAD, L9, 5/8 NC X 2-1/4 INCH		
B	120899	BOLT – HEX HEAD, L9, 5/8 NC X 1-3/4 INCH		
C	120901	WASHER – FLAT, L9, HARDENED, 5/8 IN. I.D.		
D	21491	BOLT – HEX HEAD, 1/2 NC X 1-1/4 INCH, GR 5		
E	18697	NUT – LOCK, 1/2 NC, DISTORTED THREAD		
F	21583	BOLT – HEX HEAD, 5/8 NC X 3 INCH, GR 5		
G	18666	NUT – LOCK, 5/8 NC, DISTORTED THREAD		
H	6647	WASHER – FLAT, 19.8 MM I.D X 50 MM O.D X 6 MM THICK		
J	21066	BOLT – RHSN, 1/2 NC X 1 INCH, GR 5		
K	50186	NUT – SMOOTH FLANGE, 1/2 NC, DISTORTED THREAD		
L	18640	WASHER – LOCK, 3/4 NC I.D.		
M	102636	NUT – HEX, 3/4 NC, SIDE LOCK DISTORTED THREAD		
N	21471	BOLT – RHSN, 1/2 NC X 1-1/4 INCH, GR 5		
P	112129	NUT – HEX, 3/4 UNF, DISTORTED THREAD		
Q	21863	BOLT – RHSN, 3/8 NC X 3/4 INCH, GR 5		
R	30228	NUT – SMOOTH FLANGE, 3/8 NC, DISTORTED THREAD		
S	18637	WASHER – LOCK, 3/8 INCH I.D.		
T	21264	BOLT – HEX HEAD, 3/8 NC X 1-1/4 INCH, GR 5		
U	30299	BOLT – HEX HEAD, 1/2 NC X 4 IN, THRD FULL LGTH, GR 5		
V	21383	NUT – SERRATED FLANGE, 1/2 NC		
W	120232	BOLT – RHSN, 1/2 NC X 2-1/2 INCH, GR 5		
X	21389	NUT – LOCK, 1/2 NC		
Y	30693	BOLT – SERRATED FLANGE, 3/8 NC X 1/2 INCH		

74. Quantities: 20 ft. = 2, 25–40 ft. = 4.
75. Knife storage tube located inside round backtube of header frame.

KNIFE DRIVE – TIMED DOUBLE-KNIFE HEADERS

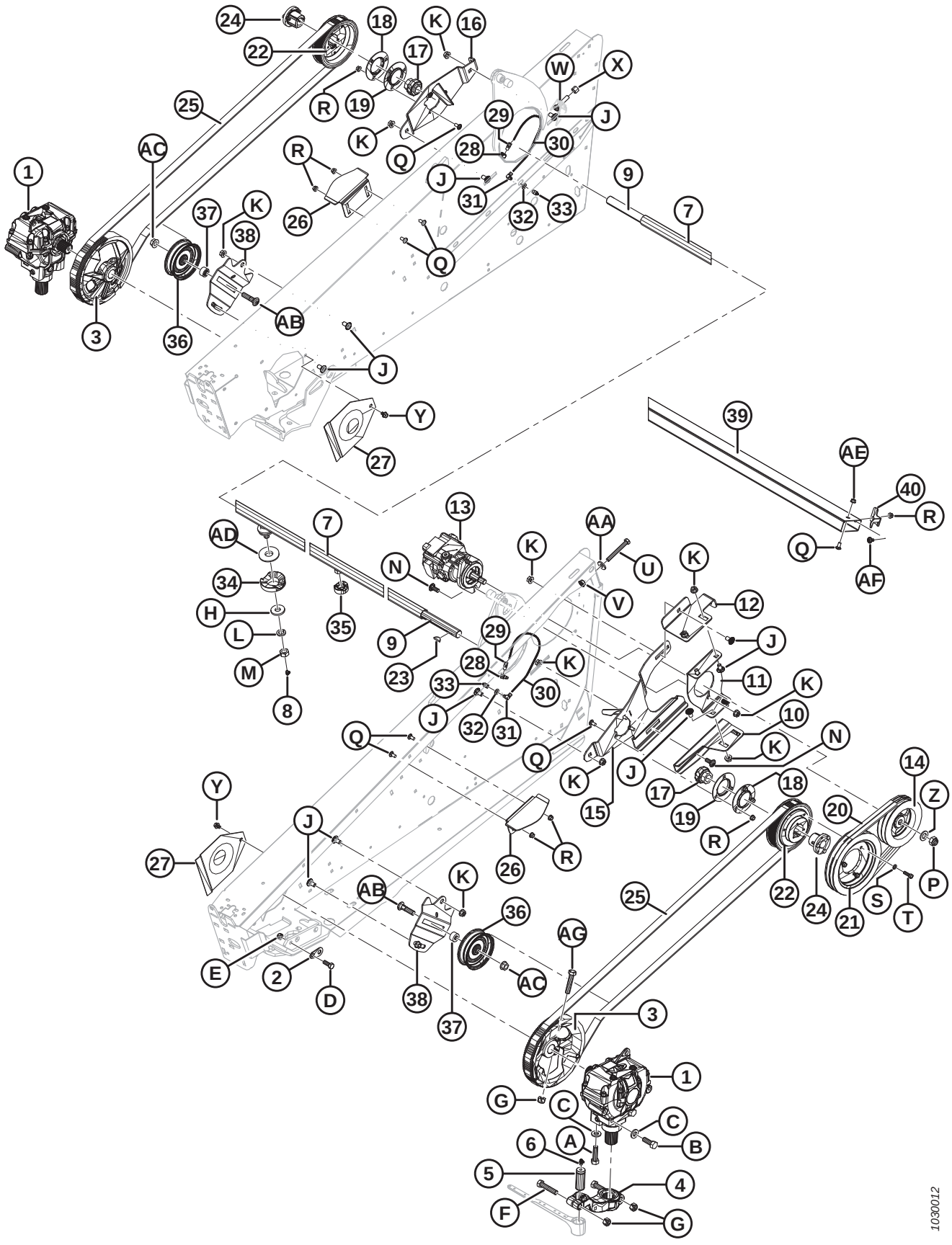

Ref	Part Number	Description	Qty	Serial Number
Z	18601	WASHER – FLAT, 13/16 I.D. X 1-1/2 INCH O.D.		
AA	4761	WASHER – FLAT, 13.5 MM I.D X 35 MM O.D X 4.5 MM THICK		
AB	18525	BOLT – RHSN, 5/8 NC X 2-1/2 INCH, GR 5		
AC	50225	NUT – FLG DT 5/8-11 UNC GR 5 AA1J		
AD	10254	WASHER – FLAT		
AE	21452	NUT – FLANGE (SER FACE) .375-16 UNC		
AF	21472	BOLT – RHSN 3/8-16 X .75, GR 5		
AG	21406	BOLT – HH 5/8 NC X 3.5 GR 5 ZP		

16 Knife Drive Box

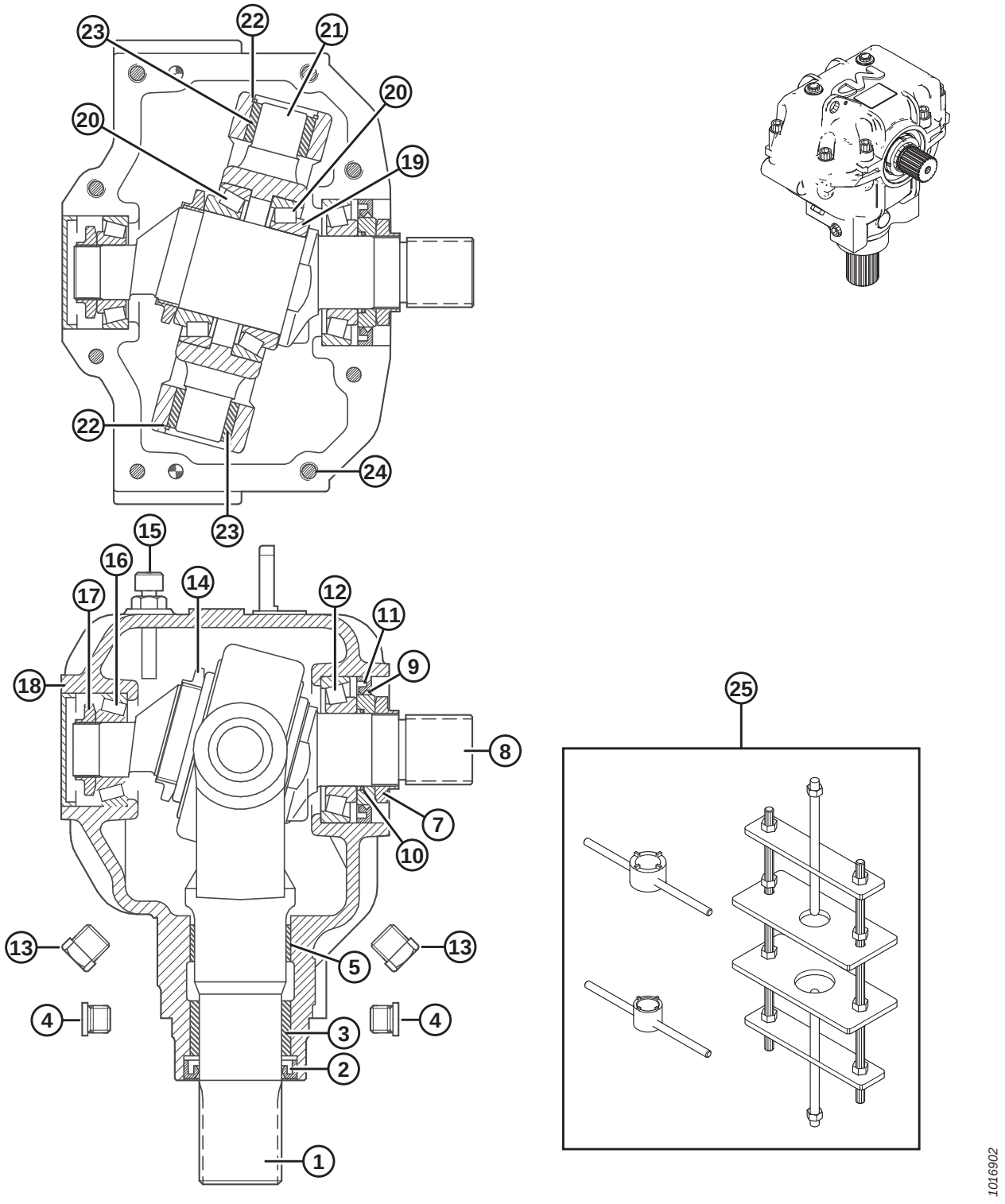

NOTE:

Apply retaining compound (Loctite® 603 or equivalent) to output yoke (MD #100706) and input shaft (MD #100710) before assembly.

Ref	Part Number	Description	Qty	Serial Number
	100532	DRIVE – SICKLE, COMPLETE	1	
1	100706	YOKE – OUTPUT	1	
2	100707	SEAL – OIL, OUTPUT SHAFT	1	
3	100708	BUSHING – BRONZE	1	
4	252423	PLUG – HEX SOCKET	2	
5	100726	BUSHING – STEEL	1	
7	100709	NUT – SPECIAL	1	
8	100710	SHAFT – INPUT	1	
9	102629	SPACER – 60 MM O.D.	1	
10	100712	O-RING	1	
11	102630	SEAL – OIL, INPUT SHAFT, 60 MM I.D.	1	
12	100714	BEARING ASSEMBLY – CUP AND CONE	1	
13	103096	PLUG – OIL DRAIN	2	
14	100715	NUT – LOCK, M55 X 2 IN.	1	
15	100716	PLUG – BREATHER, C/W DIPSTICK	1	
16	100717	BEARING ASSEMBLY – CUP AND CONE	1	
17	100718	NUT – LOCK, M30 X 1.5 IN.	1	
18	100719	CAP – DUST	1	
19	113152	SHIM – INPUT SHAFT	1	
20	100720	BEARING ASSEMBLY – CUP AND CONE	2	
21	100721	PIVOT	1	
22	100722	RING – RETAINING, INTERNAL	2	
23	100723	BUSHING – BRONZE	2	
24	113153	BOLT – SOCKET HEAD, M10 X 50 MM	8	
25	139003	TOOL KIT – SICKLE DRIVE BOX DISASSEMBLY/ASSEMBLY	A/R	

17 Knife Drive Hydraulics – Single-Knife (D120, D130, D135, and D140)

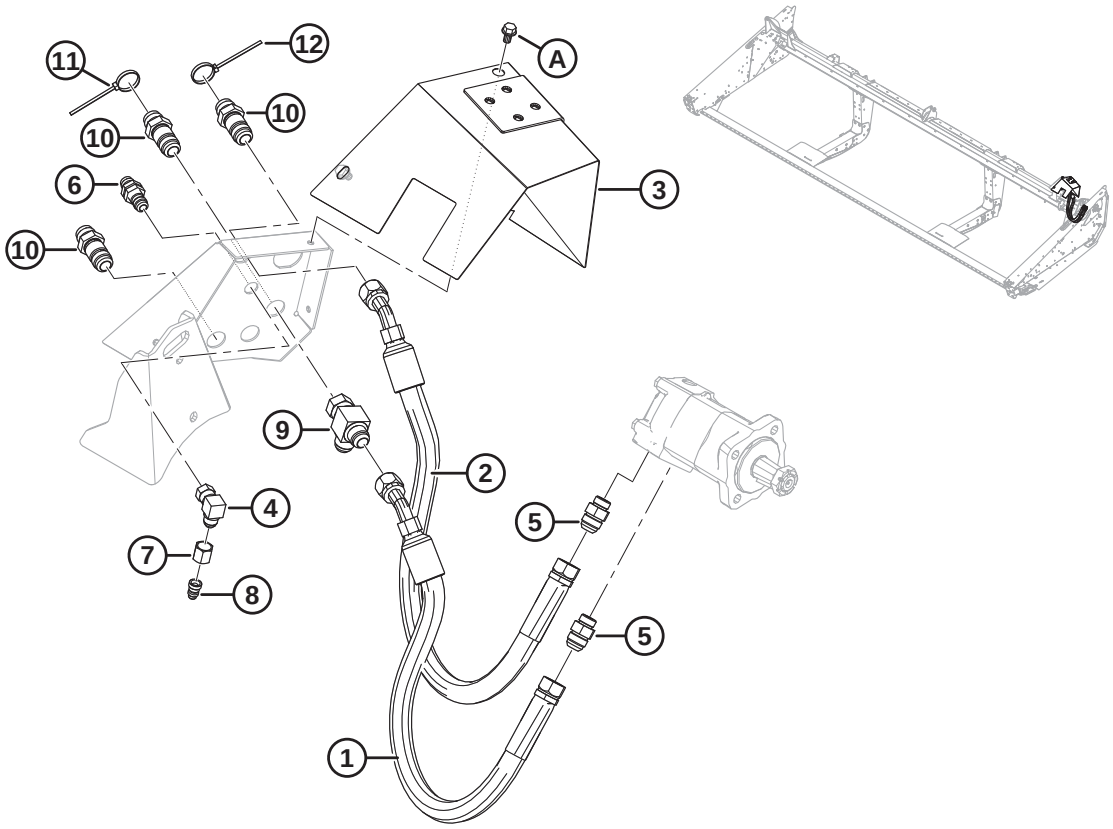

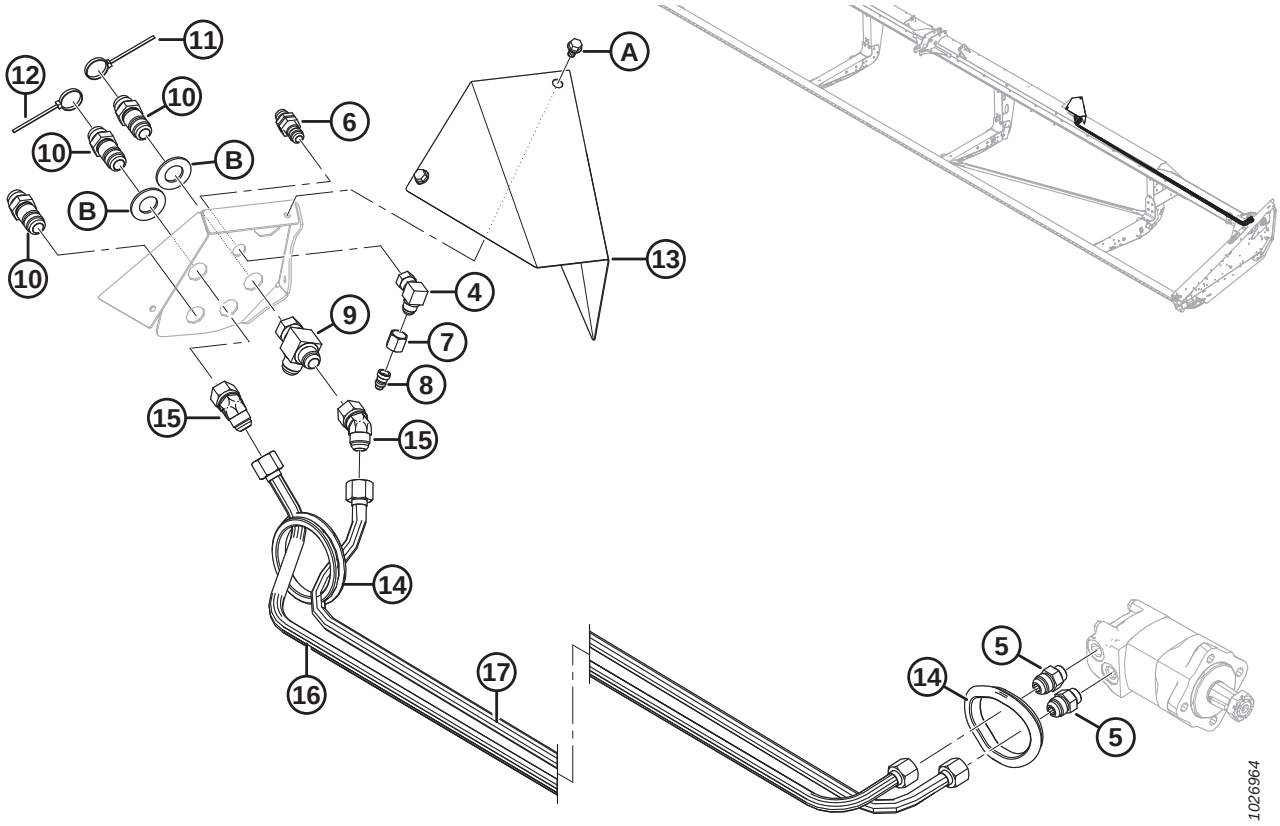

NOTE:

Illustration; TOP: 20 ft., BOTTOM: 40 ft.

Ref	Part Number	Description	Qty	Serial Number
1	132903	HOSE – HYDRAULIC	1	
2	132904	HOSE – HYDRAULIC	1	
3	255866	COVER – WELDT RIGID COUPLERS (20 FT ONLY)	1	
4	30314	FITTING – ELBOW 90° HYD	1	
5	30610	FITTING – CONNECTOR HYD	2	
6	30819	FITTING – 1/2 IN. HYD UNION	1	
7	21069	NUT – TUBE 37° JIC 1/2 IN.	1	
8	30981	FITTING – ADAPTER HYD REDUCER 1/2 X 3/8	1	
9	50086	FITTING – HYD TEE	1	
10	135372	FITTING – 3/4 IN. HYD BULKHEAD 37° FLARE UNION	3	
11	40703	FASTENER – CABLE TIE, BLUE	1	
12	40704	FASTENER – CABLE TIE, ORANGE	1	
13	254109	COVER – RIGID COUPLERS (40 FT ONLY)	1	
14	125722	GROMMET – RUBBER 99 MM ID	2	
15	135240	FITTING – ELBOW 45° HYD	2	
16	174258	LINE – 40 FT RIGID KNIFE DRIVE PRESSURE	1	
17	174259	LINE – 40 FT RIGID SK KNIFE DRIVE RETURN	1	
A	50076	BOLT – HEX FLG (SER FACE) 3/8 NC X 0.63 GR 5 ZP		
B	18603	WASHER – SAE FLAT 1 1/16 ID X 2.0 IN OD ZP (40 FT ONLY)		

18 Knife Drive Hydraulics – Single-Knife (D125, D130, and D135)

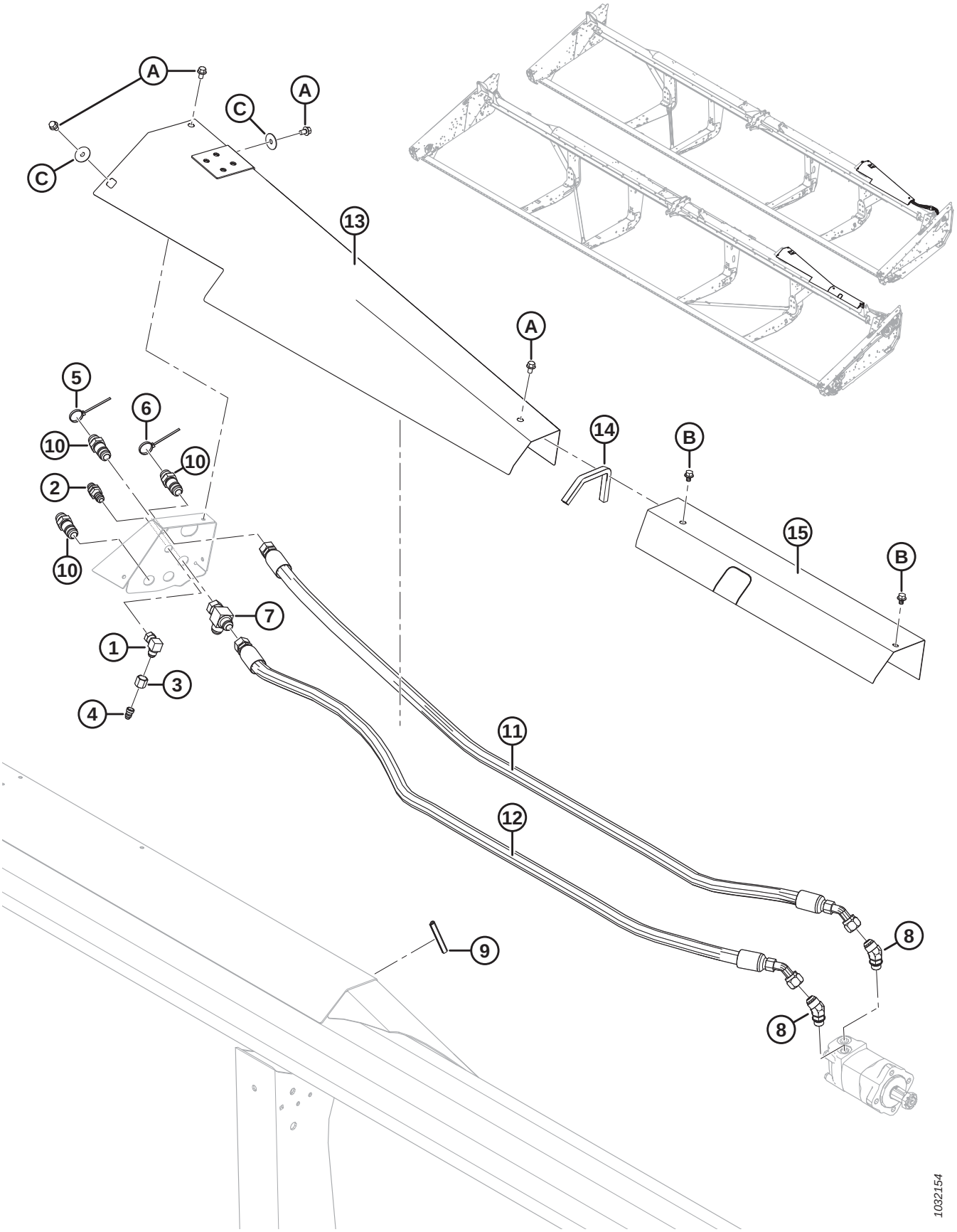

Ref	Part Number	Description	Qty	Serial Number
1	30314	FITTING – ELBOW 90° HYD	1	
2	30819	FITTING – 1/2 IN. HYD UNION	1	
3	21069	NUT – TUBE 37° JIC 1/2 IN.	1	
4	30981	FITTING – ADAPTER HYD REDUCER 1/2 X 3/8	1	
5	40703	FASTENER – CABLE TIE, BLUE	1	
6	40704	FASTENER – CABLE TIE, ORANGE	1	
7	50086	FITTING – HYD TEE	1	
8	135182	FITTING – ELBOW 45° HYD CW O-RING	2	
9	135190	SEAL – EDGE TRIM	1	
10	135372	FITTING – 3/4 IN. HYD BULKHEAD 37° FLARE UNION	3	
11	120573	HOSE – HYD (25 FT ONLY)	1	
	120574	HOSE – HYD (30 FT ONLY)	1	
	120575	HOSE – HYD (35 FT ONLY)	1	
12	120577	HOSE – HYD (25 FT ONLY)	1	
	174356	HOSE – HYD (30 FT ONLY)	1	
	174357	HOSE – HYD (35 FT ONLY)	1	
13	255506	COVER – WELDT RIGID COUPLERS (25 FT ONLY)	1	
	304320	COVER – WELDT RIGID COUPLERS (30 FT ONLY)	1	
	304322	COVER – WELDT KNIFE COUPLERS (35 FT ONLY)	1	
14	31889	MOULDING – (30 FT ONLY)	1	
15	165417	COVER – KNIFE DRIVE HOSES (35 FT ONLY)	1	
A	50076	BOLT – HEX FLG (SER FACE) 3/8 NC X 0.63 GR 5 ZP		
B	30693	BOLT – FLANGE SER FACE .375-16 UNC X 0.50 LG (35 FT ONLY)		
C	18963	WASHER – FLAT		

19 Knife Drive Hydraulics – Timed Double-Knife (D120)

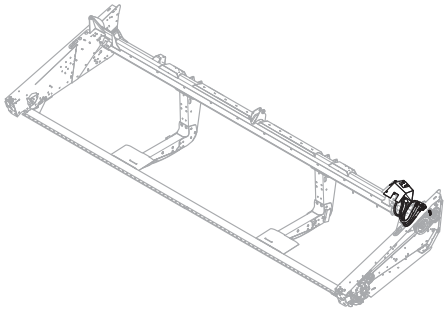

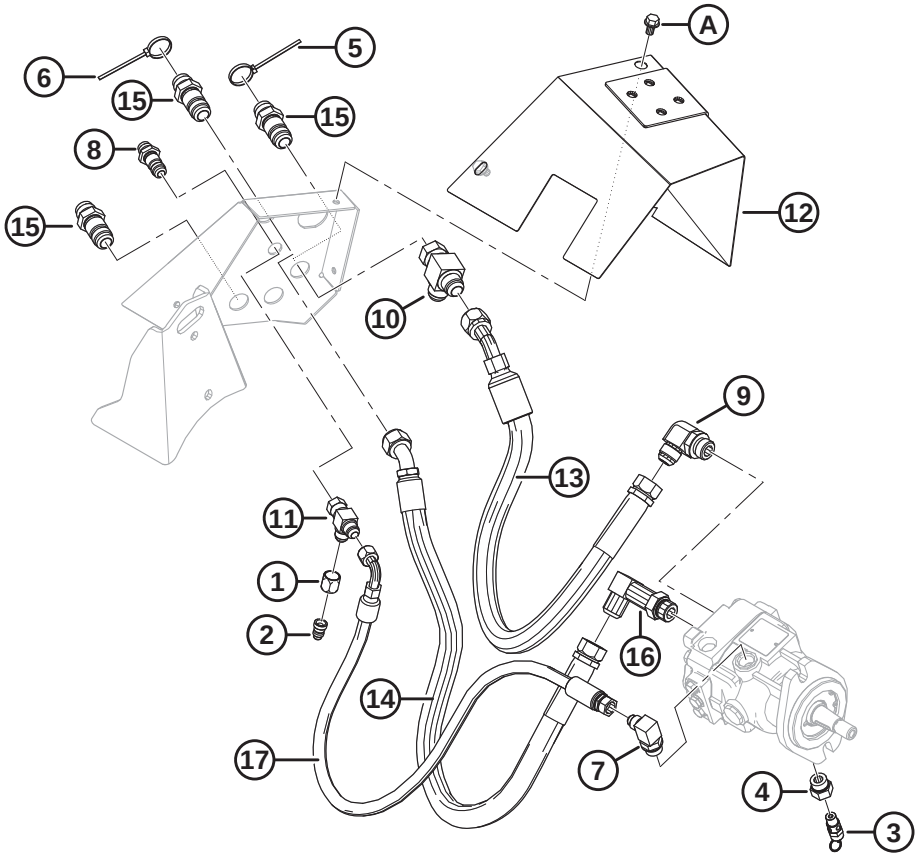

1026965

KNIFE DRIVE HYDRAULICS – TIMED DOUBLE-KNIFE (D120)

Ref	Part Number	Description	Qty	Serial Number
1	21069	NUT – TUBE 37° JIC 1/2 IN.	1	
2	30981	FITTING – ADAPTER HYD REDUCER 1/2 X 3/8	1	
3	120377	VALVE – RELIEF	1	
4	135255	FITTING – ADAPTER HYD C/W O-RING	1	
5	40703	FASTENER – CABLE TIE, BLUE	1	
6	40704	FASTENER – CABLE TIE, ORANGE	1	
7	21801	FITTING – ELBOW 90° HYD	1	
8	30819	FITTING – 1/2 IN. HYD UNION	1	
9	30970	FITTING – ELBOW 90° HYD	1	
10	50086	FITTING – HYD TEE	1	
11	108268	FITTING – HYD TEE	1	
12	255866	COVER – WELDT RIGID COUPLERS	1	
13	132903	HOSE – HYDRAULIC	1	
14	132904	HOSE – HYDRAULIC	1	
15	135372	FITTING – 3/4 IN. HYD BULKHEAD 37° FLARE UNION	3	
16	135612	FITTING – LONG ELBOW HYD	1	
17	255211	HOSE – HYDRAULIC	1	
A	50076	BOLT – HEX FLG (SER FACE) 3/8 NC X 0.63 GR 5 ZP		

20 Knife Drive Hydraulics – Timed Double-Knife (D125, D130, and D135)

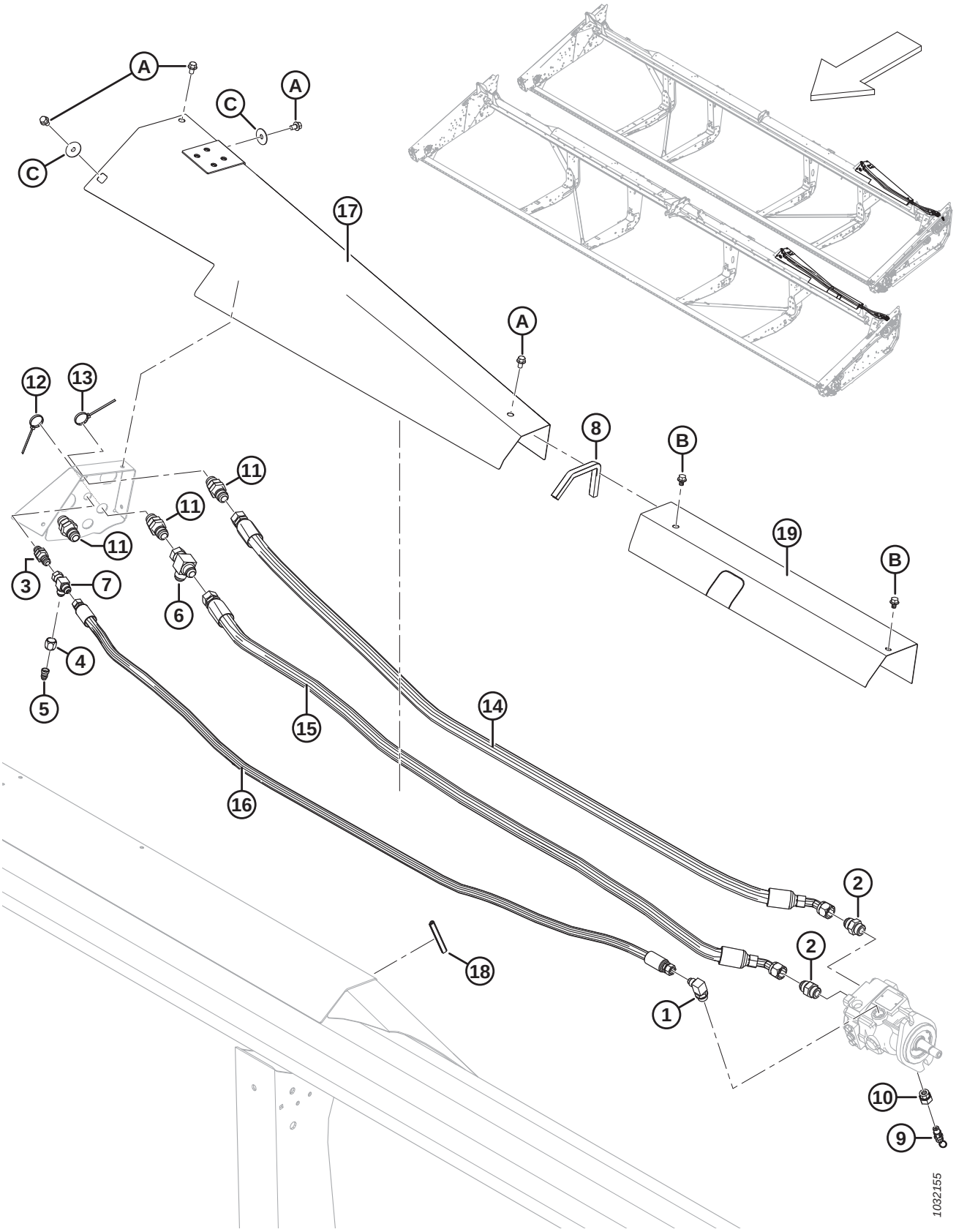

Ref	Part Number	Description	Qty	Serial Number
1	21801	FITTING – ELBOW 90° HYD	1	
2	21830	FITTING – CONNECTOR HYD	2	
3	30819	FITTING – 1/2 IN. HYD UNION	1	
4	21069	NUT – TUBE 37° JIC 1/2 IN.	1	
5	30981	FITTING – ADAPTER HYD REDUCER 1/2 X 3/8	1	
6	50086	FITTING – HYD TEE	1	
7	108268	FITTING – HYD TEE	1	
8	135190	SEAL – EDGE TRIM	1	
9	120377	VALVE – RELIEF	1	
10	135255	FITTING – ADAPTER HYD C/W O-RING	1	
11	135372	FITTING – 3/4 IN. HYD BULKHEAD 37° FLARE UNION	3	
12	40703	FASTENER – CABLE TIE, BLUE	1	
13	40704	FASTENER – CABLE TIE, ORANGE	1	
14	120573	HOSE – HYD (25 FT ONLY)	1	
	120574	HOSE – HYD (30 FT ONLY)	1	
	120575	HOSE – HYD (35 FT ONLY)	1	
15	120577	HOSE – HYD (25 FT ONLY)	1	
	174356	HOSE – HYD (30 FT ONLY)	1	
	174357	HOSE – HYD (35 FT ONLY)	1	
16	255311	HOSE – HYD (25 FT ONLY)	1	
	254047	HOSE – HYD (30 FT ONLY)	1	
	254044	HOSE – HYD (35 FT ONLY)	1	
17	255506	COVER – WELDT RIGID COUPLERS (25 FT ONLY)	1	
	304320	COVER – WELDT RIGID COUPLERS (30 FT ONLY)	1	
	304322	COVER – WELDT KNIFE COUPLERS (35 FT ONLY)	1	
18	31889	MOULDING (30 FT ONLY)	1	
19	165417	COVER – KNIFE DRIVE HOSES (35 FT ONLY)	1	
A	50076	BOLT – HEX FLG (SER FACE) 3/8 NC X 0.63 GR 5 ZP		
B	30693	BOLT – FLANGE SER FACE .375-16 UNC X 0.50 LG (35 FT ONLY)		
C	18963	WASHER – FLAT		

21 Knife Drive Hydraulics – Untimed Double-Knife (D140 and D145)

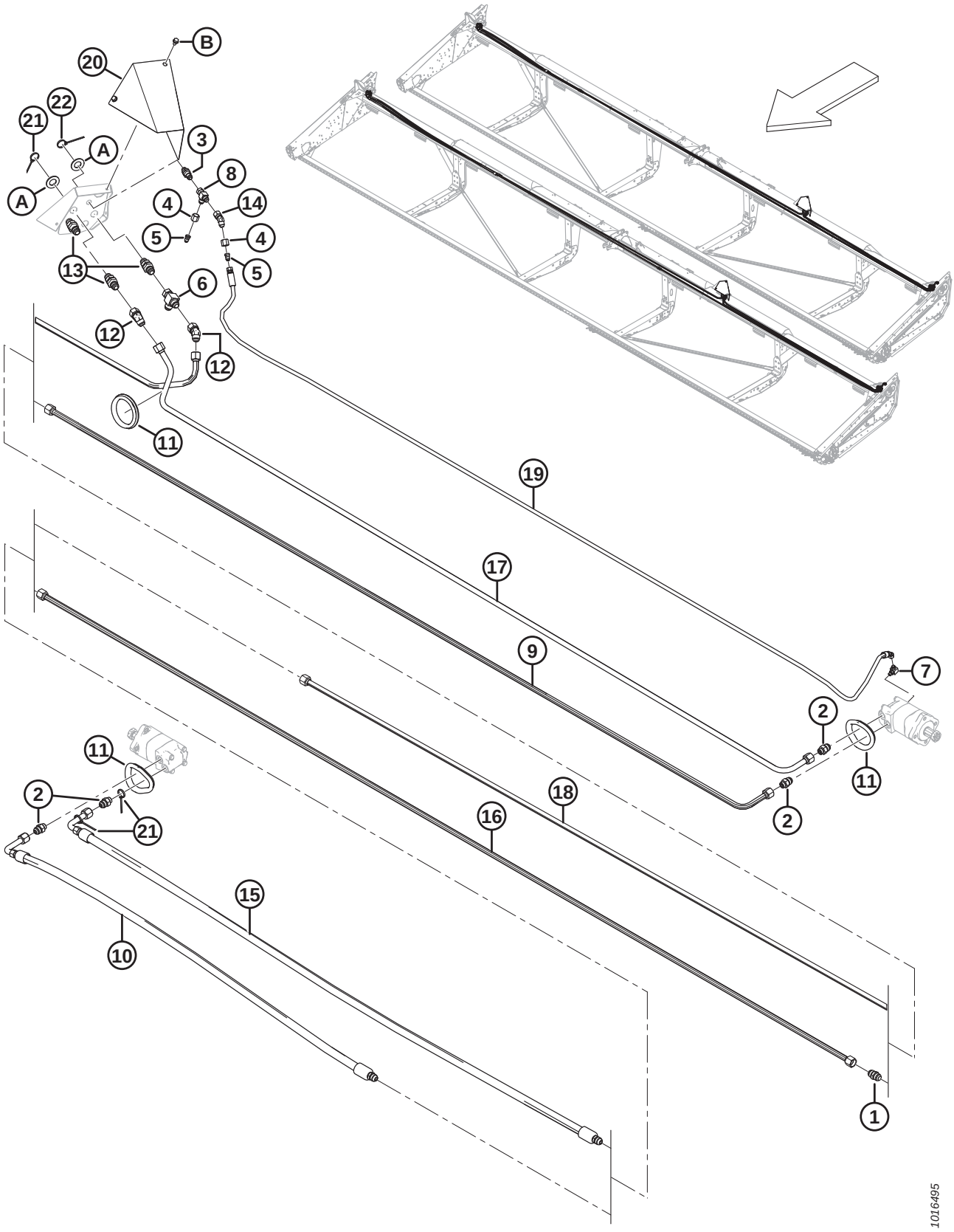

Ref	Part Number	Description	Qty	Serial Number
1	30376	FITTING – UNION HYD	1	
2	30610	FITTING – CONNECTOR HYD	4	
3	30819	FITTING – 1/2 IN. HYD UNION	1	
4	21069	NUT – TUBE, 37° JIC 1/2 IN.	2	
5	30981	FITTING – ADAPTER HYD REDUCER 1/2 X 3/8	2	
6	50086	FITTING – HYD TEE	1	
7	50104	FITTING – ELBOW 90° HYD	1	
8	108268	FITTING – HYD TEE	1	
9	125670	LINE – KNIFE DRIVE LH TO RH MOTOR	1	
10	125672	HOSE – HYD (40 FT ONLY)	1	
	165294	HOSE – HYD (45 FT ONLY)	1	
11	125722	GROMMET – RUBBER, 99 MM ID, 131 MM OD	3	
12	135240	FITTING – ELBOW 45° HYD	2	
13	135372	FITTING – 3/4 IN. HYD BULKHEAD 37° FLARE UNION	3	
14	135685	FITTING – ELBOW 45° HYD	1	
15	174256	HOSE – HYD (40 FT ONLY)	1	
	165294	HOSE – HYD (45 FT ONLY)	1	
16	165297	LINE – 3/4 IN DIA, STRAIGHT, 4220, 45 RH PRESSURE	1	
17	174258	LINE – RIGID KNIFE DRIVE PRESSURE (40 FT ONLY)	1	
	294996	LINE – RIGID KNIFE DRIVE PRESSURE (45 FT ONLY)	1	
18	174260	LINE – RIGID KNIFE DRIVE RH MOTOR RETURN	1	
19	174300	HOSE – FLEX AND RIGID CASE DRAIN (40 FT ONLY)	1	
	174299	HOSE – FLEX AND RIGID CASE DRAIN (45 FT ONLY)	1	
20	254109	COVER – RIGID KNIFE COUPLERS	1	
21	40703	FASTENER – CABLE TIE (BLUE)	3	
22	40704	FASTENER – CABLE TIE (ORANGE)	1	
A	18603	WASHER – SAE FLAT 1-1/16 ID X 2.0 IN OD ZP		
B	50076	BOLT – HEX FLG (SER FACE) 3/8 NC X 0.63 GR 5 ZP		

22 Draper Carrier Deck and Tensioner

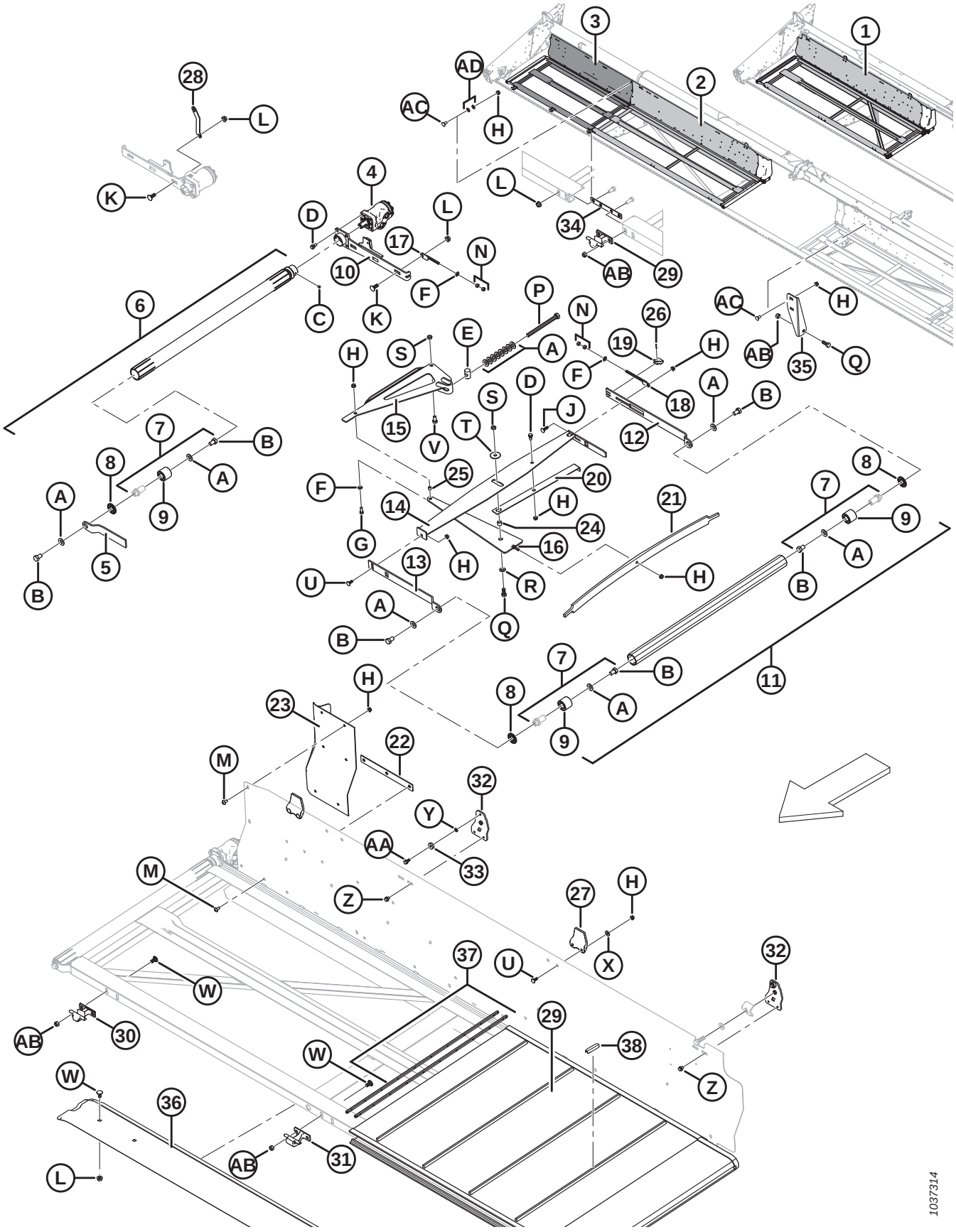

DRAPER CARRIER DECK AND TENSIONER

Ref	Part Number	Description	Qty	Serial Number
1	245023	DECK WELDT – C/W DECAL (20 FT LH)	1	
	245025	DECK WELDT – C/W DECAL (20 FT RH)	1	
	245027	DECK WELDT – C/W DECAL (25 FT LH)	1	
	245029	DECK WELDT – C/W DECAL (25 FT RH)	1	
	245031	DECK WELDT – C/W DECAL (30 FT LH)	1	
	245033	DECK WELDT – C/W DECAL (30 FT RH)	1	
	245035	DECK WELDT – C/W DECAL (35 FT LH)	1	
	245037	DECK WELDT – C/W DECAL (35 FT RH)	1	
	245039	DECK WELDT – C/W DECAL (40 FT LH)	1	
	245041	DECK WELDT – C/W DECAL (40 FT RH)	1	
2	123949	DECK WELDT – INNER (45 FT LH)	1	
	123948	DECK WELDT – INNER (40 FT RH SPLIT FRAME AND 45 FT RH)	1	
3	245042	DECK WELDT – OUTER (40 FT RH SPLIT FRAME)	1	
	125602	DECK WELDT – OUTER (45 FT LH)	1	
	125607	DECK WELDT – OUTER (45 FT RH)	1	
4	220936	MOTOR – HYD 220 DANFOSS 2.44 CI	2	
	123306	KEY – WOODRUFF (1/4 X 1 NOM.)		
	220944	SEAL KIT		
5	145148	ARM – ROLLER SUPPORT (LH)	1	
	120058	ARM – ROLLER SUPPORT (RH)	1	
6	255410	ASSY – RIBBED ROLLER W/ SCREWS [76]	2	
7	165735	PIN – ASSY DRAPER ROLLER [77]	6	
8	120845	SEAL – NILOS LSTO STEEL DISK	10	
9	132607	BEARING – DBLE ROW BALL 52 MM O.D. 25 MM I.D.	6	
10	255416	ARM – WELDT DECK SHIFT (LH)	1	
	255417	ARM – WELDT DECK SHIFT (RH)	1	
11	174714	IDLER ROLLER ASSEMBLY [78]	2	
12	145122	ARM – SUPPORT REAR	2	
13	145106	ARM – ROLLER SUPPORT	2	
14	220183	MEMBER – STABILIZER WELDT (LH)	1	
	220184	MEMBER – STABILIZER WELDT (RH)	1	
15	220181	BELL CRANK WELDT	2	
16	120462	MEMBER – COMPRESSION WELDT	2	
17	145593	ROD – ADJUSTER WELDT, DRIVE END	2	
18	145345	ROD – ADJUSTER WELDT, IDLER END	2	
19	145357	BRACKET – IDLER ARM	2	
20	145428	INDICATOR	2	
21	145548	SPRING – LEAF (TENSIONER)	2	
22	304783	BAR	2	

76. Includes steel disk seal (MD #120845), draper roller pin assembly (MD #165735), and two set screws (MD #132451).
77. Includes double row ball bearing (MD #132607).
78. Includes steel disk seal (MD #120845) and draper roller pin assembly (MD #165735).

DRAPER CARRIER DECK AND TENSIONER

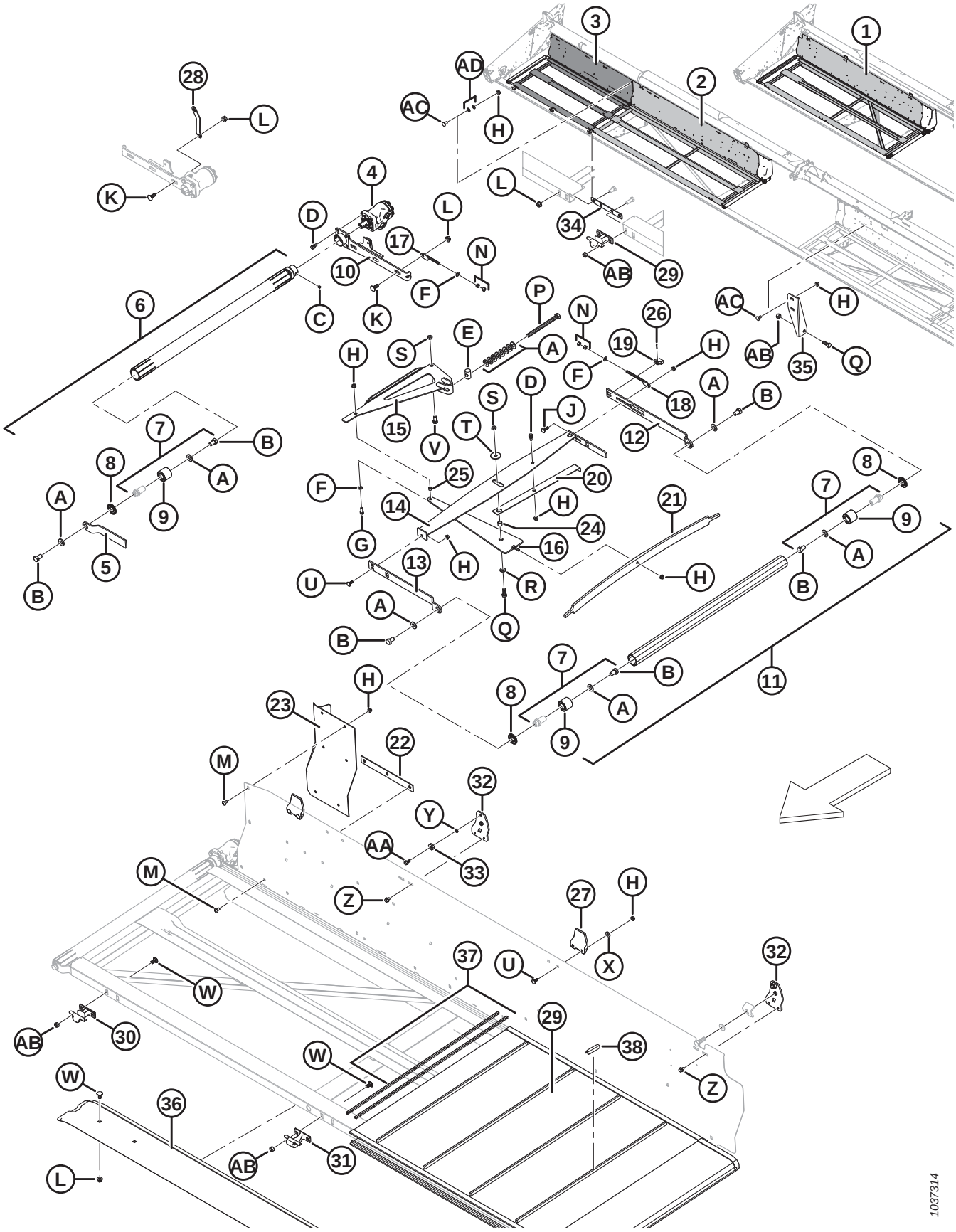

Ref	Part Number	Description	Qty	Serial Number
23	125588	EXTENSION – BACKSHEET (LH)	1	
	125589	EXTENSION – BACKSHEET (RH)	1	
24	132531	SPACER – 12.95 MM I.D., 19.05 MM O.D., 15 MM LG	2	
25	132532	SPACER – 9.75 MM I.D., 12.7 MM O.D., 12 MM LG	2	
26	18604	PIN – COTTER 3/32 DIA X 3/4 ZP	2	
27	145840	GUIDE – BACKSHEET [79]	2/4	
28	132096	HOLDER (25–45 FT ONLY)	1	
29	220635	DRAPER – 20 FT, WCCO [80]	2	
	220636	DRAPER – 25 FT, WCCO [80]	2	
	220637	DRAPER – 30 FT, WCCO [80]	2	
	172195	DRAPER – 30 FT, LEGG (OPTION) [80]	2	
	220638	DRAPER – 35 FT, WCCO [80]	2	
	172196	DRAPER – 35 FT, LEGG (OPTION) [80]	2	
	220639	DRAPER – 40 FT/40 FT SPLIT, WCCO [80]	2	
	172197	DRAPER – 40 FT/40 FT SPLIT, LEGG (OPTION) [80]	2	
	220640	DRAPER – 45 FT, WCCO [80]	2	
	172198	DRAPER – 45 FT, LEGG (OPTION) [80]	2	
	220642	DRAPER – 150 FT BULK ROLL	A/R	
	220641	DRAPER – REPAIR KIT [81]	A/R	
30	120009	SUPPORT – DECK (CASTING) [82]	4/10	
31	129913	SUPPORT – DECK (CASTING) [83]	2/4	
32	220176	SUPPORT – DRILLED [84]	4	
33	18867	BEARING – BALL CYL C/W TWO SEALS [84]	4	
34	132692	BAR – WELDT (45 FT ONLY)	2	
35	125622	SUPPORT – DECK CENTER (45 FT ONLY)	1	
36	220418	SUPPORT – LOWER DRAPER TRACK (30 FT RG)	2	
	220264	SUPPORT – LOWER DRAPER TRACK (35 FT RG)	2	
	220391	SUPPORT – LOWER DRAPER TRACK (40–45 FT RG)	2	

79. Quantities: 25 and 45 ft. = 2, 30–40 ft. = 4.
80. Includes slat connector kit MD #132777.
81. Includes 20 inch draper material and two connector slats.
82. Quantities: 20–40 ft. = 4, 45 ft. = 10.
83. Quantities: 25–30 ft. = 2, 35–40 ft. = 4.
84. Excludes 45 ft. header.

DRAPER CARRIER DECK AND TENSIONER

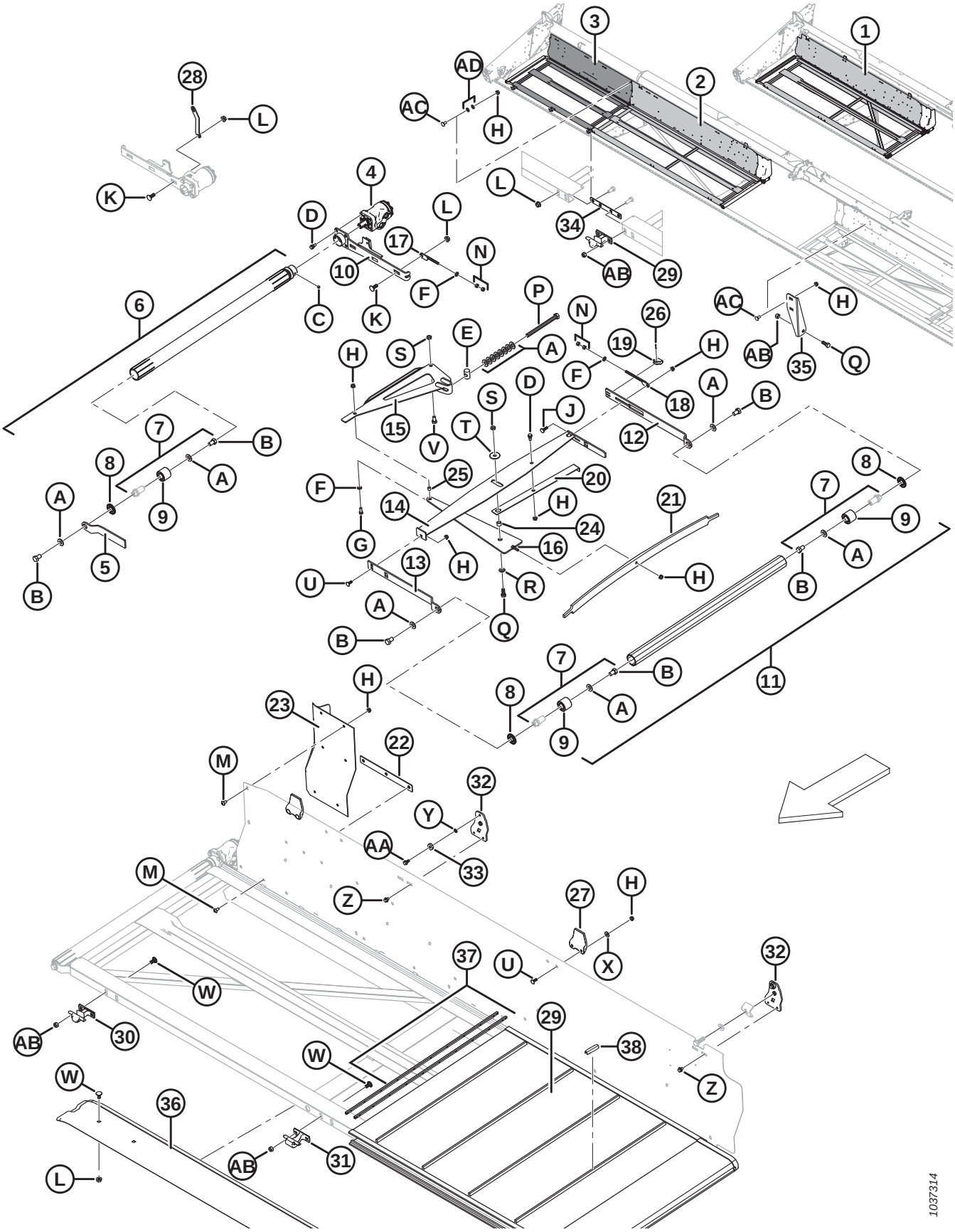

Ref	Part Number	Description	Qty	Serial Number
37	132777	KIT – SLAT CONNECTOR [85]	A/R	
	172710	KIT – DRAPER CONNECTOR HARDWARE [86]	A/R	
38	294858	DRAPER CLIPS – TAPER CLEAT, 25 PACK [87]	A/R	
	294859	DRAPER CLIPS – SQUARE CLEAT, 25 PACK [87]	A/R	
A	30441	WASHER – HARDENED		
B	145249	BOLT – HH 5/8 NF X 1.0 LG GR 5 ZP		
C	132451	SCREW – SET HEX SOCKET CUP PT 3/8 NC X 3/8 LG		
D	172259	BOLT – SHOULDER .375-16 UNC		
E	145361	NUT – SPECIAL		
F	18598	WASHER – SAE FLAT 13/32 I.D. X 13/16 IN. O.D. ZP		
G	20077	BOLT – HEX HD 3/8 NC X 1.0 LG GR 5 ZP		
H	30228	NUT – FLANGE DT SMOOTH FACE 0.375-16 UNC		
J	19966	BOLT – RHSN 3/8 NC X 1.25 LG GR 5 ZP		
K	21471	BOLT – RHSN 1/2 NC X 1.25 GR 5 ZP		
L	50186	NUT – FLG LOCK SM FACE DT 0.500-13 UNC GR 5		
M	135157	SCREW – MACHINE		
N	18590	NUT – HEX 3/8, 16 UNC GR 5 ZP		
P	135906	BOLT – HH 5/8 NC X 7.5 LG TFL GR 5 ZP		
Q	21491	BOLT – HH 1/2 NC X 1.25 LG GR 5 ZP		
R	18599	WASHER – SAE FLAT 17/32 I.D. X 1-1/16 IN. O.D. ZP		
S	137727	NUT – HEX JAM, DT 1/2-13 UNC GR 5 ZP		
T	42592	WASHER – FLAT		
U	19965	BOLT – RHSN 3/8 NC X 1.0 GR 5 ZP		
V	21575	BOLT – HH 1/2 NC X 1.0 LG GR 5 ZP		
W	21066	BOLT – RHSN 1/2 NC X 1 GR 5 ZP		
X	20535	WASHER – FLAT		
Y	18637	WASHER – REG. LOCK 3/8 IN. NOM. I.D. ZP		
Z	30693	BOLT – FLG (SER FACE) .375-16 UNC X 0.50 LG		
AA	101897	SCREW – HEX WASH HD THD ROLLING 3/8 NC X 3/4		
AB	18697	NUT – HEX LOCK DT .500-13 UNC		
AC	21863	BOLT – RHSSN 3/8 NC X 0.75 LG GR 5 ZP		
AD	172363	WASHER – BELLEVILLE 3/8 [88]		

85. Includes two tubes and connector hardware.
86. Includes 25 screws and nuts.
87. Kit includes 25 clips (NSS) and instructions. One kit is required per draper for 15–25 ft. headers, and two kits are required per draper for 30–45 ft. headers.
88. 45 ft. headers only.

23 Draper Deflectors – Combine

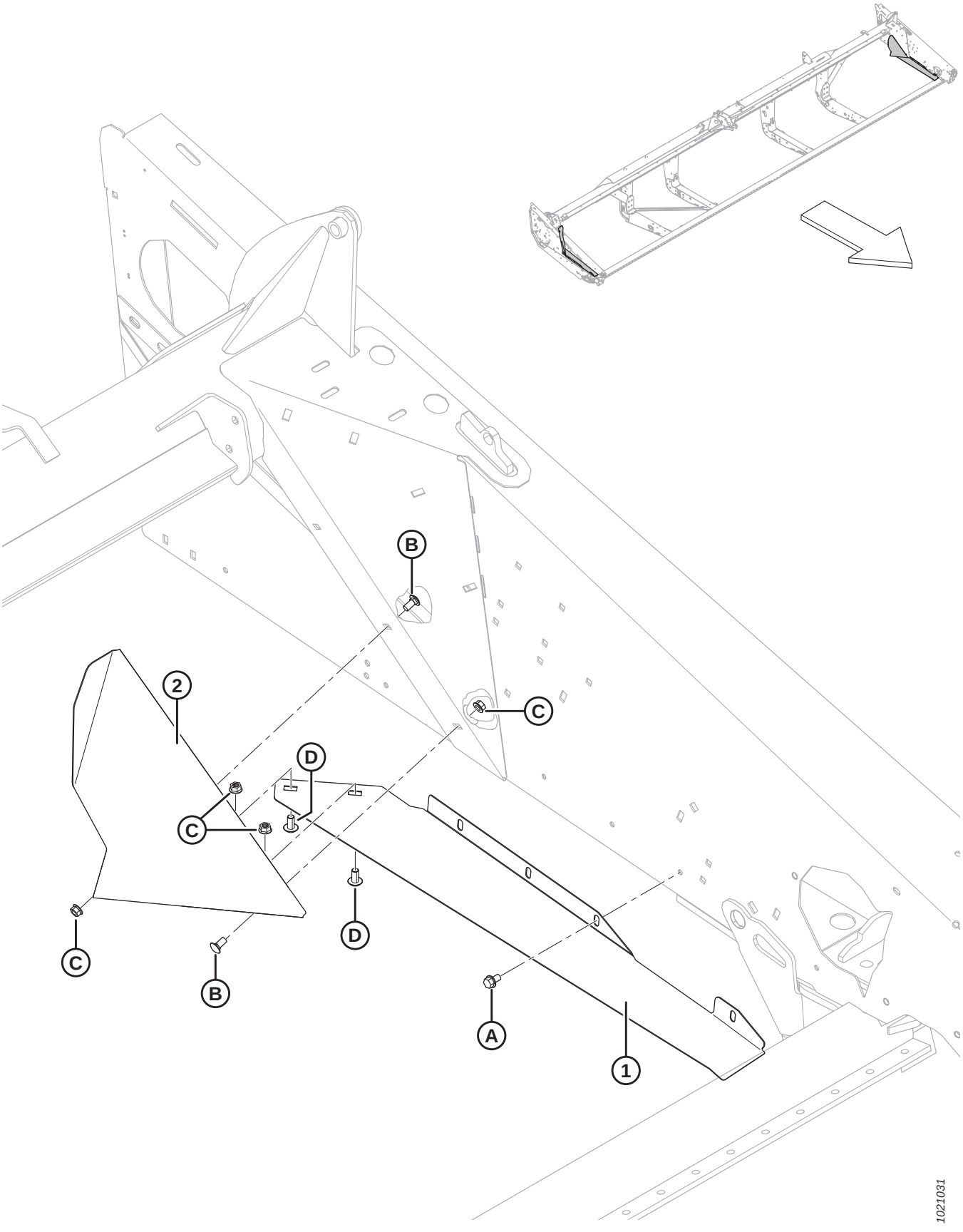

DRAPER DEFLECTORS – COMBINE

Ref	Part Number	Description	Qty	Serial Number
1	304257	DEFLECTOR – ANGLE, LH	1	
	304258	DEFLECTOR – ANGLE, RH	1	
2	125741	DEFLECTOR – REAR COMBINE DRAPER, LH	1	
	125742	DEFLECTOR – REAR COMBINE DRAPER, RH	1	
A	101898	SCREW – HEX WASH HD THD ROLLING 3/8 NC X 5/8		
B	21863	BOLT – RHSSN 3/8 NC X 0.75 LG GR 5 ZP		
C	30228	NUT – FLANGE DT SMOOTH FACE 0.375-16 UNC		
D	135157	SCREW – MACHINE		

24 Draper Backsheet Deflectors

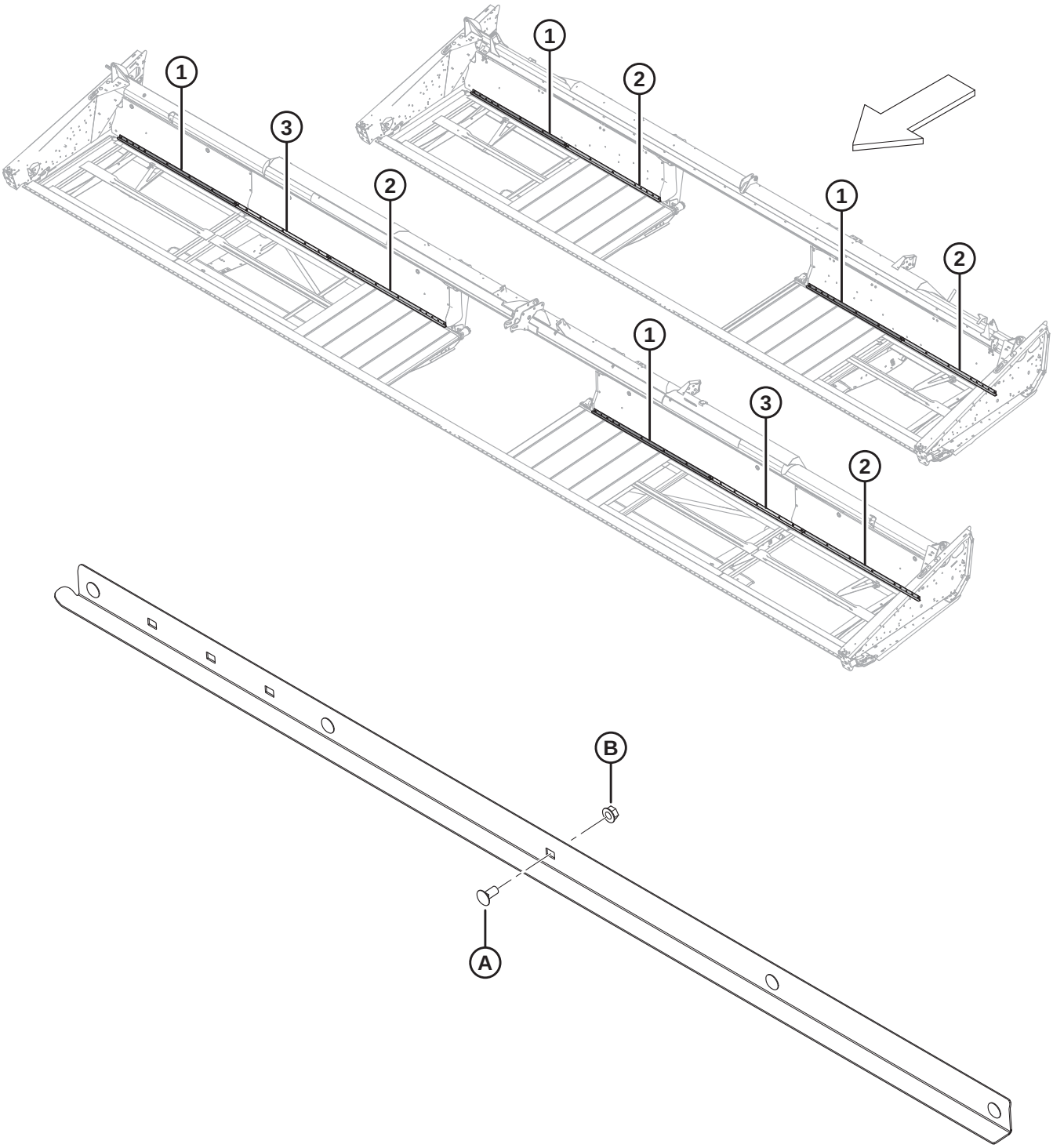

DRAPER BACKSHEET DEFLECTORS

Ref	Part Number	Description	Qty	Serial Number
1	123662	DEFLECTOR – 25 FT	2	
2	123937	DEFLECTOR – 30 FT (LH)	2	
	123939	DEFLECTOR – 35 FT (LH)	2	
	245114	DEFLECTOR – 40 FT (LH)	2	
3	123938	DEFLECTOR – 30 FT (RH)	2	
	123940	DEFLECTOR – 35 FT (RH)	2	
	245115	DEFLECTOR – 40 FT (RH)	2	
A	21863	BOLT – RHSSN 3/8 NC X 0.75 LG GR 5 ZP		
B	30228	NUT – FLG DT SMOOTH FACE 0.375-16 UNC		

25 Draper Drive – Manual Deck Shift

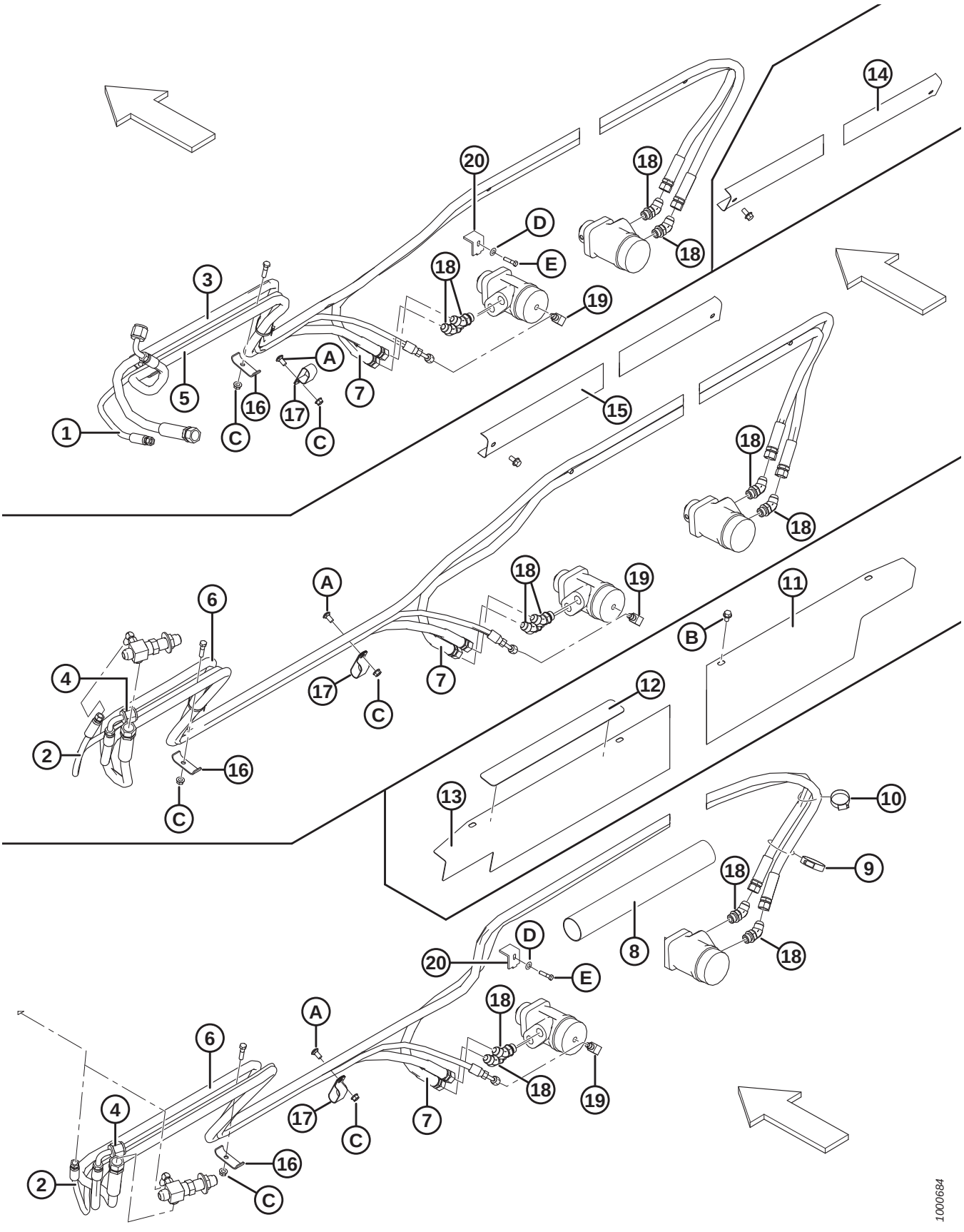

NOTE:

Illustration; TOP: 15–20 ft. headers, MIDDLE: 45 ft. headers, BOTTOM: 25–40 ft. headers.

Ref	Part Number	Description	Qty	Serial Number
1	120568	HOSE – HYD 1/4 IN. DIA 100R17 1950 LG [89]	1	
2	159587	HOSE – HYD 1/4 IN. ID, 2350 MM LG, METAL REIN. [90]	1	
3	120988	HOSE – HYD 1/2 IN. 1900 LG 100R17 [89]	1	
4	120570	HOSE – HYD 1/2 IN. ID, 2200 MM LG, METAL REIN. [90]	1	
5	220491	HOSE – HYD 1/2 IN. ID, 4700 MM LG, METAL REIN. [89]	1	
6	220412	HOSE – HYD 1/2 IN. ID, 5250 MM LG, METAL REIN. [90]	1	
7	132867	HOSE – HYD 0.5 IN. ID, 3440 MM LG, METAL REIN.	1	
8	132017	SLEEVE – PLASTIC [91]	1	
9	17958	CLAMP – HOSE GEAR TYPE [91]	1	
10	30639	CLAMP – HOSE GEAR TYPE [91]	1	
11	132871	HOLDER – RH WITH ANTI-SLIP [91]	1	
12	132117	STRIP – ANTI-SLIP [91]	4	
13	132870	HOLDER – LH WITH ANTI-SLIP [91]	1	
14	245964	HOLDER – HOSES [92]	1	
15	245965	HOLDER – HOSES [93]	1	
16	103351	HOLDER	2	
17	50022	CLAMP – INSULATED 15/16 INCH [94]		
18	50103	FITTING – ELBOW 45° HYD C/W O-RING	4	
19	50104	FITTING – ELBOW 90° HYD	1	
20	145558	CLAMP – DECK SHIFT [95]	2	
	21763	FASTENER – CABLE TIE, BLACK (NOT ILLUSTRATED)	2	
A	21863	BOLT – RHSSN 3/8 NC X 0.75 LG GR 5 ZP		
B	101898	SCREW – HEX WASH HD THD ROLL 3/8 NC X 5/8		
C	30228	NUT – FLG DT SMOOTH FACE 0.375-16 UNC		
D	18600	WASHER – SAE FLAT 21/32 I.D. X 1-5/16 IN. O.D. ZP		
E	21582	BOLT – HH 5/8 NC X 1.75 LG GR5 ZP		

89. 15 ft. manual deck shift only.
90. 20–45 ft. manual deck shift only.
91. 25–40 ft. manual deck shift only.
92. 15–20 ft. manual deck shift only.
93. 45 ft. rigid only.
94. Quantities: 20–45 ft. = 2.
95. Excludes 45 ft. rigid.

26 Pick-Up Reel – Single-Reel Headers (D120, D125, D130, and D135)

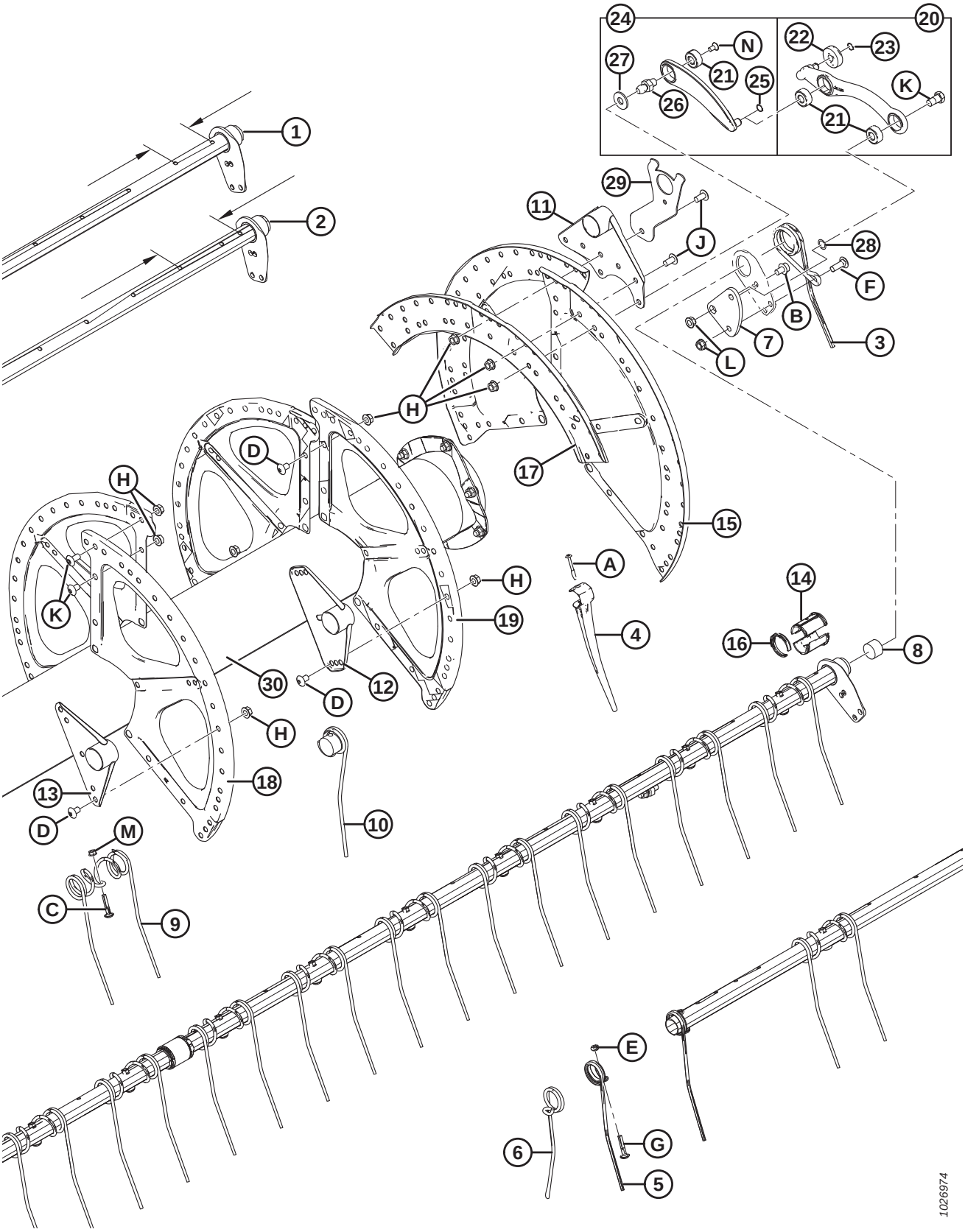

IMPORTANT:

Quantities for narrow (#1) and wide (#2) stagger tine tubes vary; Narrow stagger = 120 mm / Wide stagger = 196 mm. See illustration for measurement location.

Ref	Part Number	Description	Qty 5/6/9 Bat	Serial Number
	B5940	KIT – 20 FT TINE TUBE CONV, 6–9 BAT PLASTIC FINGERS [96]		
	B5655	KIT – 20 FT TINE TUBE CONV, 6–9 BAT STEEL FINGERS [96]		
	B5937	KIT – 25 FT TINE TUBE CONV, 6–9 BAT PLASTIC FINGERS [96]		
	B5656	KIT – 25 FT TINE TUBE CONV, 6–9 BAT STEEL FINGERS [96]		
1	137568	TINE TUBE – NARROW STAGGER (20 FT HEADER) [97]		
	137421	TINE TUBE – NARROW STAGGER (25 FT HEADER) [98]		
	137650	TINE TUBE – NARROW STAGGER (30 FT HEADER) [99]		
	137642	TINE TUBE – NARROW STAGGER (35 FT HEADER) [100]		
2	137569	TINE TUBE – WIDE STAGGER (20 FT HEADER) [101]		
	137422	TINE TUBE – WIDE STAGGER (25 FT HEADER) [102]		
	137651	TINE TUBE – WIDE STAGGER (30 FT HEADER) [103]		
	137643	TINE TUBE – WIDE STAGGER (35 FT HEADER) [104]		
3	245084	FINGER – CAM END	5/6/9	
4	174849	FINGER – PLASTIC HEAVY DUTY (10 PACK) [105]		
5	245083	FINGER – TAIL END	5/6/9	
6	137519	FINGER – SINGLE CONCENTRIC (LH) [106]	0/6/9	
7	137285	ARM – CRANK MACHINING	5/6/9	
8	137980	PLUG – TINE TUBE	10/12/18	
9	137092	FINGER [107]		
10	137754	FINGER – SINGLE CONCENTRIC (RH) [108]		
11	137506	ARM WELDT – CAM END	5/6/9	
12	137535	ARM WELDT [109]		
13	137543	ARM WELDT – TAIL END	5/6/9	

96. Kits available through Whole Goods only.
97. Quantities (5/6/9 Bat): 20 ft. steel = 3/3/5, 20 ft. plastic = 3/3/4.
98. Quantities (5/6/9 Bat): 25 ft. steel = 3/3/5, 25 ft. plastic = 3/3/4.
99. Quantities (5/6/9 Bat): 30 ft. steel and plastic = 3/3/0.
100. Quantities (5/6/9 Bat): 35 ft. steel and plastic = 3/3/0.
101. Quantities (5/6/9 Bat): 20 ft. steel = 2/3/4, 20 ft. plastic = 2/3/5.
102. Quantities (5/6/9 Bat): 25 ft. steel = 2/3/4, 25 ft. plastic = 2/3/5.
103. Quantities (5/6/9 Bat): 30 ft. steel and plastic = 2/3/0.
104. Quantities (5/6/9 Bat): 35 ft. steel and plastic = 2/3/0.
105. Quantities (5/6/9 Bat): 15 ft. plastic = 140/168/252, 20 ft. plastic = 191/231/348, 25 ft. plastic = 249/297/444, 30 ft. plastic = 296/354/0, 35 ft. plastic = 351/420/0.
106. Steel-fingered reels only.
107. Quantities (5/6/9 Bat): 15 ft. steel = 70/84/126, 20 ft. steel = 93/111/167, 25 ft. steel = 120/144/216, 30 ft. steel = 145/174/0, 35 ft. steel = 170/204/0.
108. Quantities (5/6/9 Bat); 20 ft. steel = 3/3/5, 25 ft. steel = 6/9/12, 30 ft. steel and plastic = 6/9/0.
109. Quantities (5/6/9 Bat): 20 ft. steel and plastic = 10/12/18, 25 ft. steel and plastic = 15/18/27, 30 ft. steel and plastic = 15/18/0, 35 ft. steel and plastic = 20/24/0.

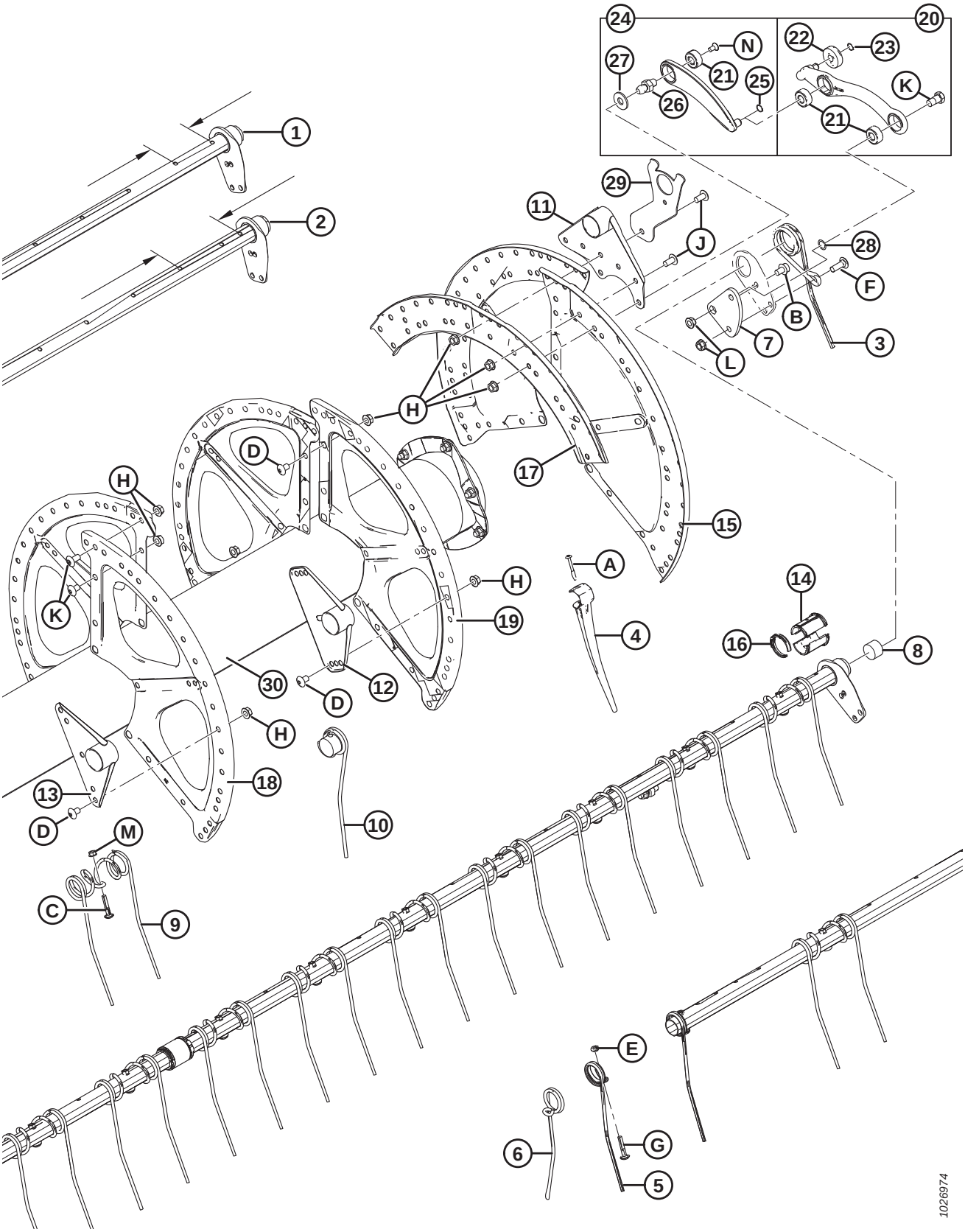
1
2
3
4
5
6
7
8
9
10
11
12
13
14
15
16
17
18
19
20
21
22
23
24
25
26
27
28
29
30
A
B
C
D
E
F
G
H
J
K
L
M
N
1026974

Ref	Part Number	Description	Qty 5/6/9 Bat	Serial Number
14	220939	BUSHING HALF – TINE TUBE (25 PACK) [110]		
15	137536	SECTOR – CAM END, 14 GA (EXCLUDES 35 FT)	3/3/3	
	164044	SECTOR – CAM END, 14 GA (35 FT ONLY)	3/3/3	
16	220941	CLAMP – TINE TUBE BUSH, CENTER RIB (5 PACK) [111]		
17	137532	CHANNEL – CAM DISC	3/3/3	
18	137142	SECTOR – 16 GA (EXCLUDES 35 FT)	3/3/3	
	164046	SECTOR – 16 GA (35 FT ONLY)	3/3/3	
19	137277	SECTOR – 18 GA (EXCLUDES 35 FT) [112]		
	164045	SECTOR – 18 GA (35 FT ONLY)	12/12/12	
20	311617	ARM – TINE CONTROL ASSEMBLY [113]	5/6/9	396190–
	304955	ARM – CAM CONTROL LINKAGE [114]	5/6/9	–396189
21	273347	BEARING	15/18/27	396190–
	273265	BEARING	15/18/27	–396189
22	273524	BEARING – CAM FOLLOWER	5/6/9	396190–
	50184	BEARING – CAM FOLLOWER	5/6/9	–396189
23	273536	RING – EXT RETAINING	5/6/9	396190–
	30523	RING – EXT RETAINING	5/6/9	–396189
24	311615	ARM – ASSEMBLY [115]	5/6/9	396190–
	304955	ARM – CAM CONTROL LINKAGE [114]	5/6/9	–396189
25	273536	RING – EXT RETAINING	5/6/9	396190–
	137523	RING – EXT RETAINING	5/6/9	–396189
26	304954	STUD – LINK	5/6/9	396190–
	279700	STUD – LINK (5 PACK)	5/6/9	–396189
27	137699	WASHER – HARD ASTM F43614-400HV-AB2C (5 BAT ONLY)	5	
28	137529	SHIM – CRANK BEARING	5/6/9	
29	REF	SUPPORT – ENDSHIELD REEL [116]		

110. Includes 25 tine tube bushings. Quantities (5/6/9 Bat): 20 ft. steel and plastic = 0/48/72, 25 ft. steel and plastic = 0/60/90, 30 ft. steel and plastic = 50/0/0, 35 ft. steel and plastic = 60/0/0.
111. Quantities (5/6/9 Bat): 20 ft. steel and plastic = 20/24/36, 25 ft. steel and plastic = 25/30/45, 30 ft. steel and plastic = 25/30/0, 35 ft. steel and plastic = 30/36/0.
112. Quantities (5/6/9 Bat): 20 ft. steel and plastic = 0/6/6, 25 ft. steel and plastic = 0/9/9, 30 ft. steel and plastic = 9/0/0.
113. Includes two bearings (MD #273347), cam follower bearing (MD #273524), and two retaining rings. For 2020 and prior machines, order cam control linkage arm (MD #304955).
114. Includes assembly arm (MD #311615), tine control assembly arm (MD #311617), link stud (MD #304954), and two retaining rings (MD #273536).
115. Includes bearing (MD #273347) and retaining ring (MD #273536). For 2020 and prior machines, order cam control linkage arm (MD #304955).
116. Refer to Section *28 Reel Endshield Components, page 95*.

PICK-UP REEL – SINGLE-REEL HEADERS (D120, D125, D130, AND D135)

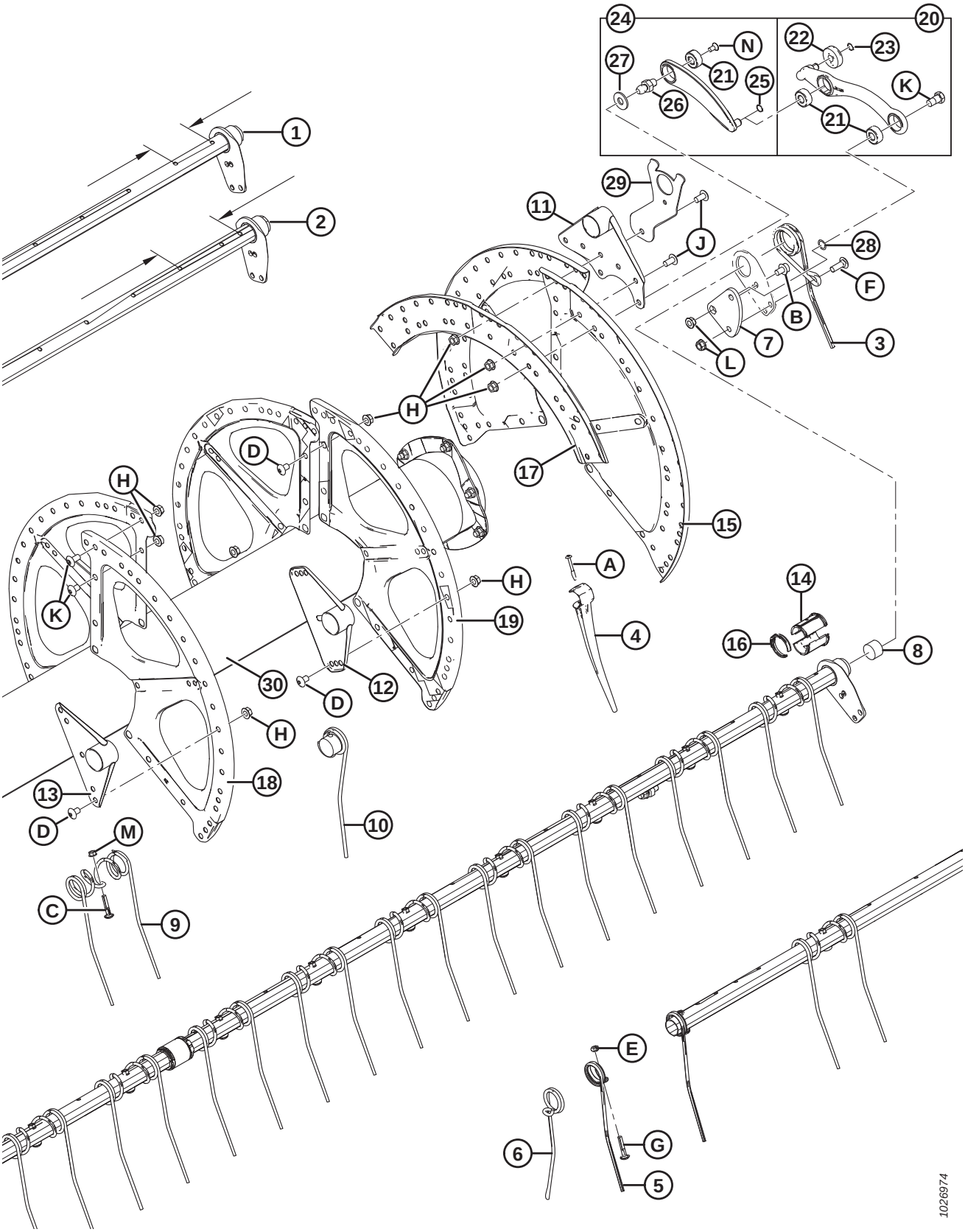

Ref	Part Number	Description	Qty 5/6/9 Bat	Serial Number
30	137911	CENTER TUBE – 20 FT, C/W REFLECTORS	1	
	137909	CENTER TUBE – 25 FT, C/W REFLECTORS	1	
	137912	CENTER TUBE – 30 FT, C/W REFLECTORS	1	
	137914	CENTER TUBE – 35 FT, C/W REFLECTORS	1	
A	252687	SCREW – TORX, 48° DBL HELIX 1/4 x 2-1/4 ZP		
B	105066	BOLT – HH FLG (SER FACE) 1/2-NC X 0.75 GR 5 ZP		
C	137118	BOLT – BHRN 3/8 NC WITH RETAINER		
D	105135	SCREW – MACHINE		
E	18669	NUT – HEX LOCK DT 3/8-16 UNC ZP		
F	21469	BOLT – RHSN 1/2 NC X 1.5 LG GR 5 ZP		
G	137118	BOLT – ROUND HD 3/8 NC RIB NK NC		
H	50186	NUT – FLG LOCK SM FACE DT 0.500-13 UNC GR 5		
J	105136	SCREW – MACHINE		
K	105141	BOLT – LOCKING SHOULDER		
L	21383	NUT – FLANGE .500-13 UNC (SER FACE)		
M	30228	NUT – FLG DT SMOOTH FACE 0.375-16 UNC		
N	113420	BOLT – CSK TORX 3/8 NC X 3/4 LG [117]		–396189

117. Model year 2021 and later machines use retaining ring MD #273536.

27 Pick-Up Reel – Double-Reel Headers (D130, D135, D140, and D145)

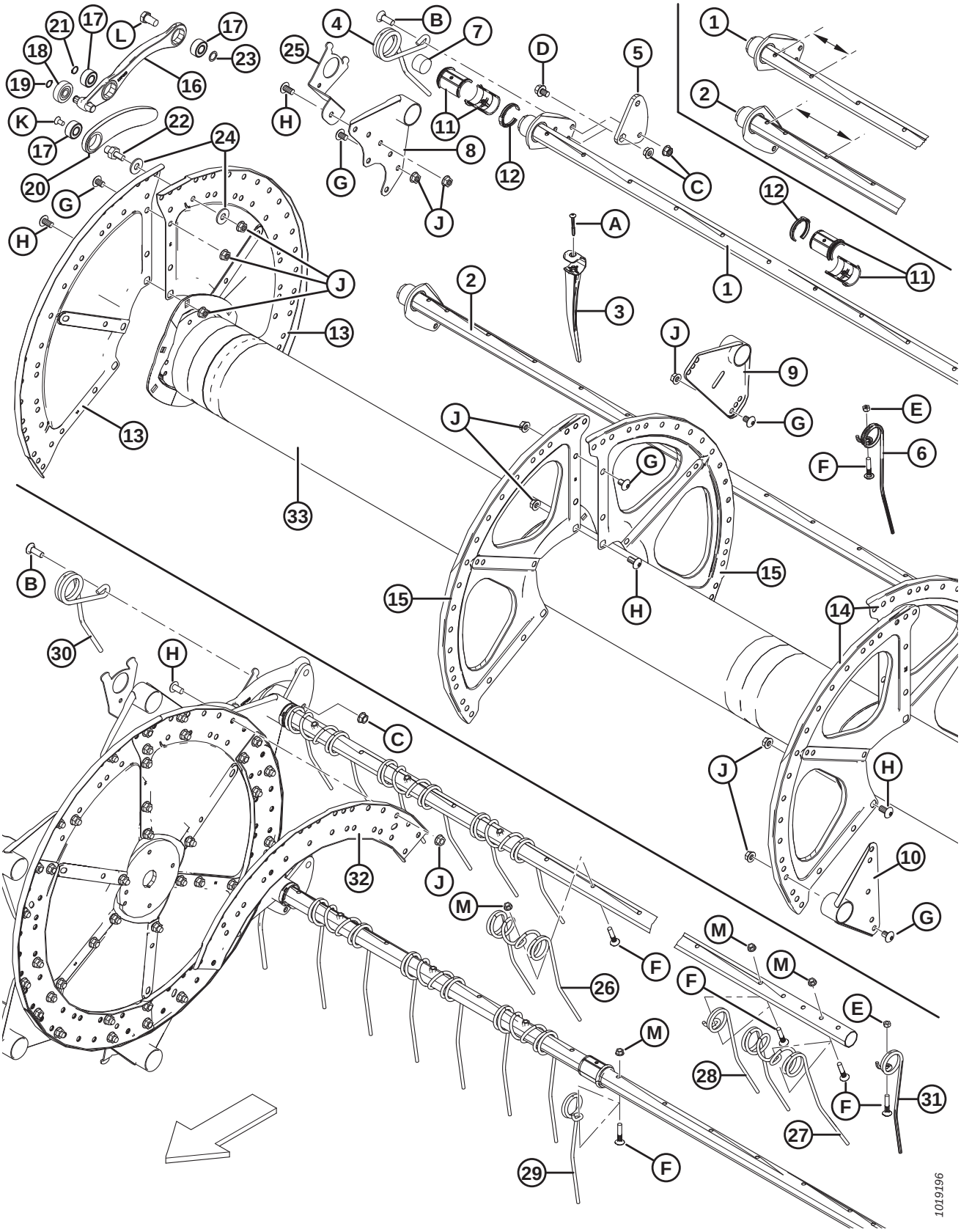

NOTE:

Illustration; TOP: Right-hand reel, BOTTOM: Left-hand reel.

IMPORTANT:

Quantities for narrow (#1) and wide (#2) stagger tine tubes vary.

- **4-inch finger spacing:** Narrow stagger (#1) = 159 mm. Wide stagger (#2) = 175 mm. See the illustration for measurement location.
- **6-inch finger spacing:** Narrow stagger (#1) = 120 mm / Wide stagger (#2) = 196 mm. See the illustration for measurement location.

Ref	Part Number	Description	Qty 5/6/9 Bat	Serial Number
	B5657	KIT – 30 FT DR TINE TUBE CONV, 6–9 BAT STEEL FINGERS, 6 IN. SPACING [118]		
	B5938	KIT – 30 FT DR TINE TUBE CONV, 5–6 BAT PLASTIC FINGERS, 6 IN. SPACING [118]		
	B5674	KIT – 35 FT DR TINE TUBE CONV, 5–6 BAT PLASTIC FINGERS, 6 IN. SPACING [118]		
	B6347	KIT – 30 FT DR TINE TUBE CONV, 6–9 BAT PLASTIC FINGERS, 4 IN. SPACING [118]		
	B6344	KIT – 30 FT DR TINE TUBE CONV, 5–6 BAT PLASTIC FINGERS, 4 IN. SPACING [118]		
	B6345	KIT – 35 FT DR TINE TUBE CONV, 5–6 BAT PLASTIC FINGERS, 4 IN. SPACING [118]		
		2018 AND LATER (4 IN. FINGER SPACING)		
1	255749	TINE TUBE – NARROW STAGGER (30 FT HEADER) [119]	6/6/10	321190–
	255716	TINE TUBE – NARROW STAGGER (35 FT HEADER) [120]	6/6/10	321190–
	255908	TINE TUBE – NARROW STAGGER (40 FT HEADER) [120]	6/6/0	321190–
	255738	TINE TUBE – NARROW STAGGER (45 FT HEADER) [121]	6/0/0	321190–
2	255746	TINE TUBE – WIDE STAGGER (30 FT HEADER) [119]	4/6/8	321190–
	255712	TINE TUBE – WIDE STAGGER (35 FT HEADER) [120]	4/6/8	321190–
	255905	TINE TUBE – WIDE STAGGER (40 FT HEADER) [120]	4/6/0	321190–
	255735	TINE TUBE – WIDE STAGGER (45 FT HEADER) [121]	4/0/0	321190–
		2017 AND PRIOR (6 IN. FINGER SPACING)		
1	137415	TINE TUBE – NARROW STAGGER (30 FT HEADER) [119]	6/6/10	–321189
	137570	TINE TUBE – NARROW STAGGER (35 FT HEADER) [122]	6/6/10	–321189
	245266	TINE TUBE – NARROW STAGGER (35 FT HEADER) [123]	6/6/10	–321189
	137568	TINE TUBE – NARROW STAGGER (40 FT HEADER) [124]	6/6/0	–321189
	253839	TINE TUBE – NARROW STAGGER (45 FT HEADER) [122]	6/0/0	–321189

118. Kits available through Whole Goods only.
119. 3 disc.
120. 3 or 4 disc / plastic finger.
121. 4 disc / plastic finger.
122. 3 disc / steel or plastic finger.
123. 4 disc / steel or plastic finger.
124. 3 or 4 disc / steel or plastic finger.

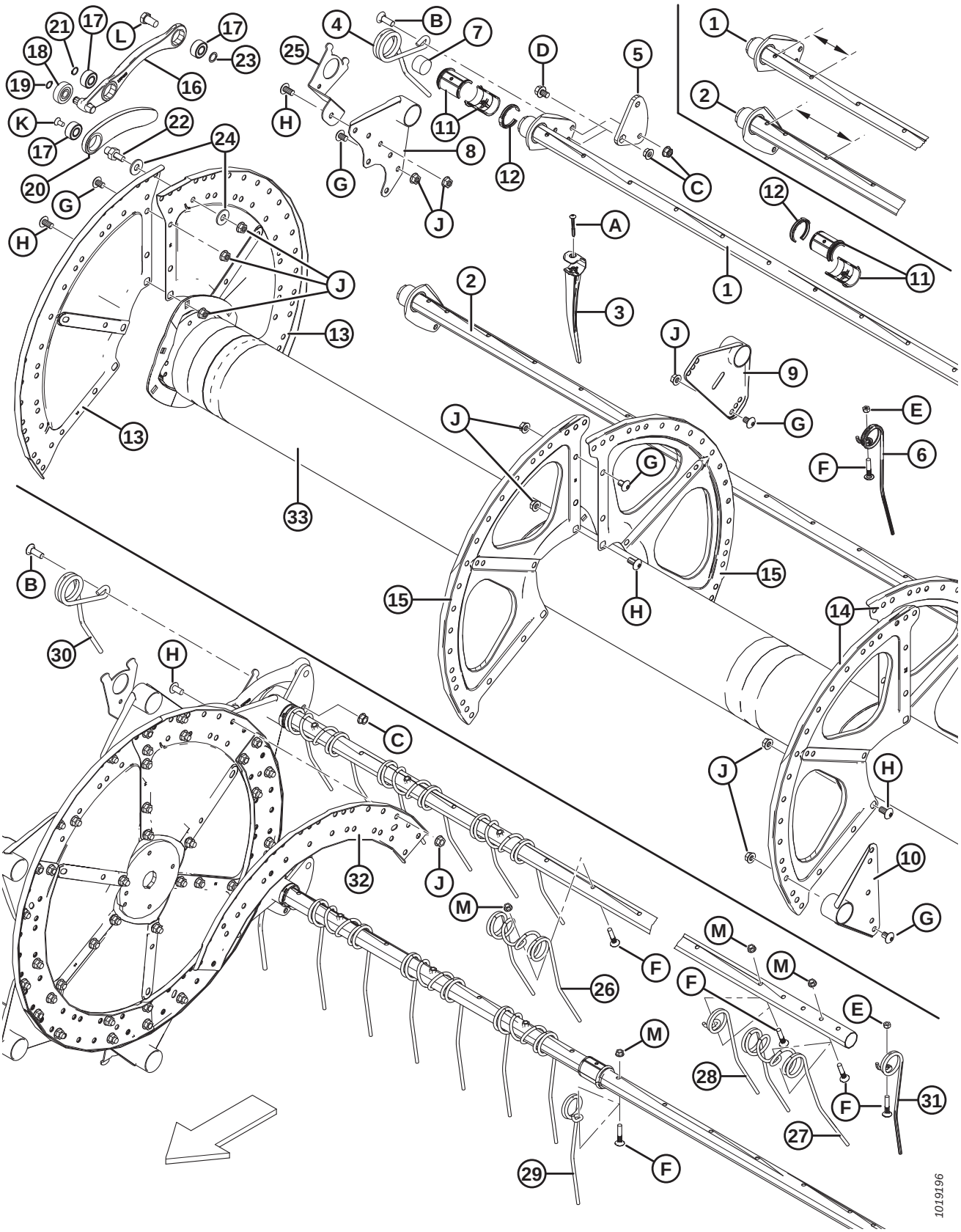
1019196

Ref	Part Number	Description	Qty 5/6/9 Bat	Serial Number
2	137416	TINE TUBE – WIDE STAGGER (30 FT HEADER) [119]	4/6/8	–321189
	137571	TINE TUBE – WIDE STAGGER (35 FT HEADER) [122]	4/6/8	–321189
	245267	TINE TUBE – WIDE STAGGER (35 FT HEADER) [123]	4/6/8	–321189
	137569	TINE TUBE – WIDE STAGGER (40 FT HEADER) [124]	4/6/0	–321189
	253503	TINE TUBE – WIDE STAGGER (45 FT HEADER) [122]	4/0/0	–321189
3	174849	FINGER – PLASTIC HEAVY DUTY (10 PACK) [125]		
4	245084	FINGER – CAM END (RH REEL)	5/6/9	
5	164894	FINGER – TAIL END (RH REEL) [126]		
6	137285	ARM – CRANK MACHINING	10/12/18	
7	137980	PLUG – TINE TUBE	20/24/36	
8	137506	ARM WELDT – CAM END	10/12/18	
9	137535	ARM WELDT [127]		
10	137543	ARM WELDT – TAIL END	10/12/18	
11	220939	BUSHING HALF – TINE TUBE (BOX OF 25)	60/72/108	
12	220941	CLAMP – TINE TUBE BUSH, CENTER RIB (5 PACK) [128]		
13	137536	SECTOR – CAM END, 14 GA	6/6/6	
14	137142	SECTOR – TAIL END, 16 GA	6/6/6	
15	137277	SECTOR – MID-SPAN, 18 GA	6/6/6	
16	311617	ARM – TINE CONTROL ASSEMBLY [129]	10/12/18	396190–
	304955	ARM – CAM CONTROL LINKAGE [130]	10/12/18	–396189
17	273347	BEARING	30/36/54	396190–
	273265	BEARING	30/36/54	–396189
18	273524	BEARING – CAM FOLLOWER	10/12/18	396190–
	50184	BEARING – CAM FOLLOWER	10/12/18	–396189

125. Quantities, 4-inch spacing (5/6/9 Bat): 30 ft. plastic = 428/562/820, 35 ft. plastic = 516/618/0, 40 ft. plastic = 606/0/0, 45 ft. plastic = 638/0/0.
Quantities, 6-inch spacing (5/6/9 Bat): 30 ft. plastic = 280/336/504, 35 ft. plastic = 332/399/598, 40 ft. plastic = 384/462/0, 45 ft. plastic = 433/0/0.
126. Quantities (5/6/9 Bat): 30–35 ft. steel and plastic = 5/6/9, 40 ft. steel and plastic = 5/6/0, 45 ft. plastic = 5/0/0.
127. Quantities (5/6/9 Bat): 30–35 ft. steel and plastic = 10/12/18, 40 ft. steel and plastic = 10/12/0, 45 ft. plastic = 10/0/0.
128. Quantities (5/6/9 Bat): 30 ft. steel and plastic = 15/18/27, 35 ft. steel and plastic = 15/17/27, 40 ft. steel and plastic = 15/18/0, 45 ft. plastic = 15/0/0.
129. Includes two bearings (MD #273347), cam follower bearing (MD #273524), and two retaining rings. For 2020 and prior machines, order cam control linkage arm (MD #304955).
130. Includes assembly arm (MD #311615), tine control assembly arm (MD #311617), link stud (MD #304954), and two retaining rings (MD #273536).

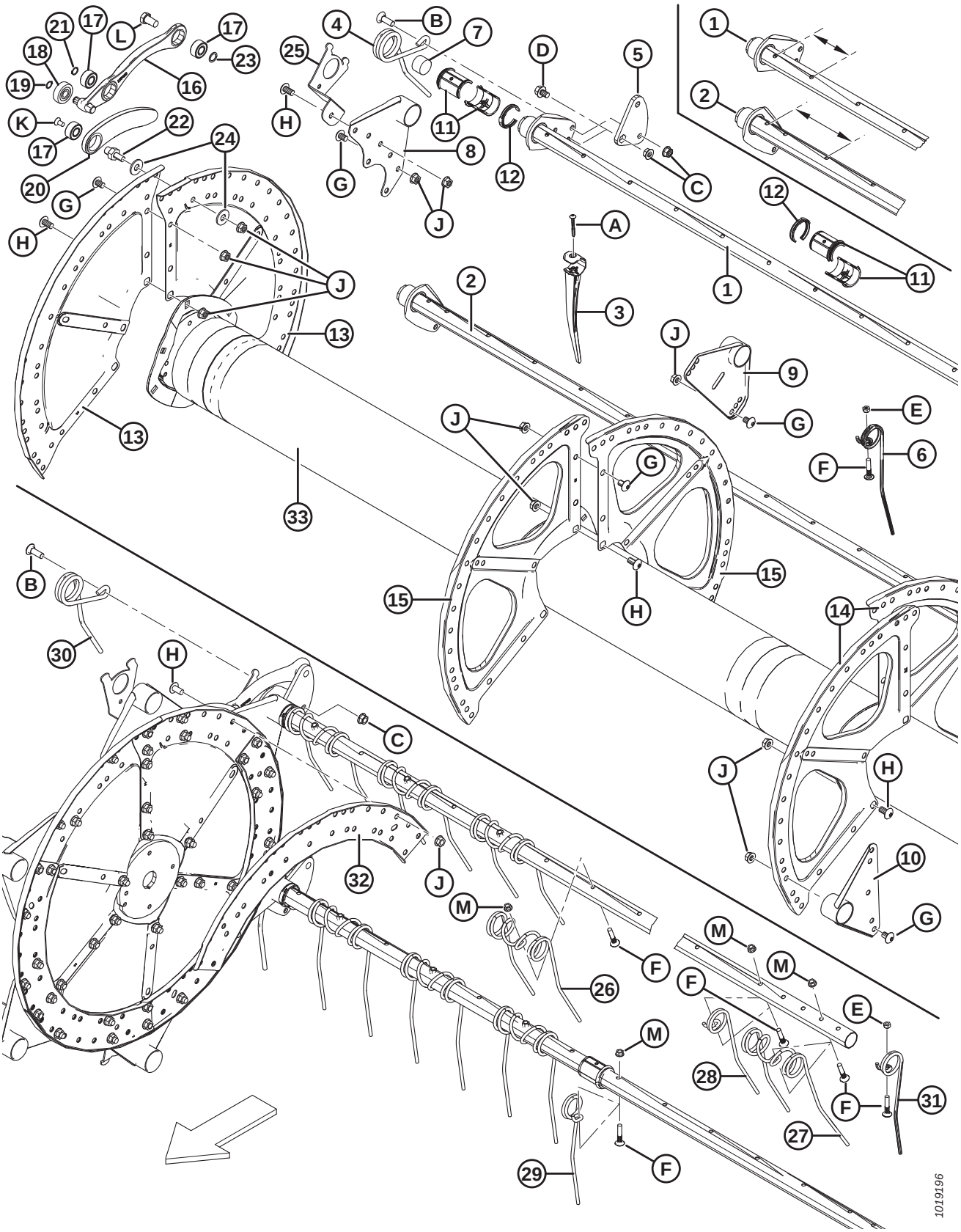
1019196

Ref	Part Number	Description	Qty 5/6/9 Bat	Serial Number
19	273536	RING – EXT RETAINING	10/12/18	396190–
	30523	RING – EXT RETAINING	10/12/18	–396189
20	311615	ARM – ASSEMBLY [131]	10/12/18	396190–
	304955	ARM – CAM CONTROL LINKAGE [130]	10/12/18	–396189
21	273536	RING – EXT RETAINING	10/12/18	396190–
	137523	RING – EXT RETAINING	10/12/18	–396189
22	304954	STUD – LINK	10/12/18	396190–
	279700	STUD – LINK (BOX OF 5)	10/12/18	–396189
23	137529	SHIM – CRANK BEARING	10/12/18	
24	137699	WASHER – USS HARD, FLAT 1/2 NOM. I.D. (5 BAT ONLY)	20/0/0	
25	REF	SUPPORT – ENDSHIELD REEL [132]		
26	137092	FINGER – DOUBLE, STEEL [133]		
27	137971	FINGER – DOUBLE, RH REEL TAIL END [134]		
28	137519	FINGER – SINGLE CONCENTRIC, LH OFFSET [135]		
29	137754	FINGER – SINGLE CONCENTRIC, RH OFFSET [136]		
30	164895	FINGER – CAM END (LH REEL)	5/6/9	
31	245083	FINGER – TAIL END (LH REEL) [137]		
32	137532	CHANNEL – CAM DISC	6/6/6	

131. Includes bearing (MD #273347) and retaining ring (MD #273536). For 2020 and prior machines, order cam control linkage arm (MD #304955).
132. Refer to Section *28 Reel Endshield Components, page 95*.
133. Quantities (5/6/9 Bat): 30 ft. steel = 135/162/243, 35 ft. steel = 156/186/280, 40 ft. steel = 182/219/0.
134. Quantities: 30 ft. = 3, 35 ft. = 3. Used on steel-fingered reels only.
135. Quantities (5/6/9 Bat): 30 ft. steel = 5/6/9, 35 ft. steel = 9/12/17, 40 ft. steel = 11/12/0.
136. Quantities (5/6/9 Bat): 30 ft. steel = 4/6/8, 35 ft. steel = 3/3/5, 40 ft. steel = 2/3/0.
137. Quantities (5/6/9 Bat): 30–35 ft. steel and plastic = 5/6/9, 40 ft. steel and plastic = 5/6/0, 45 ft. plastic = 5/0/0.

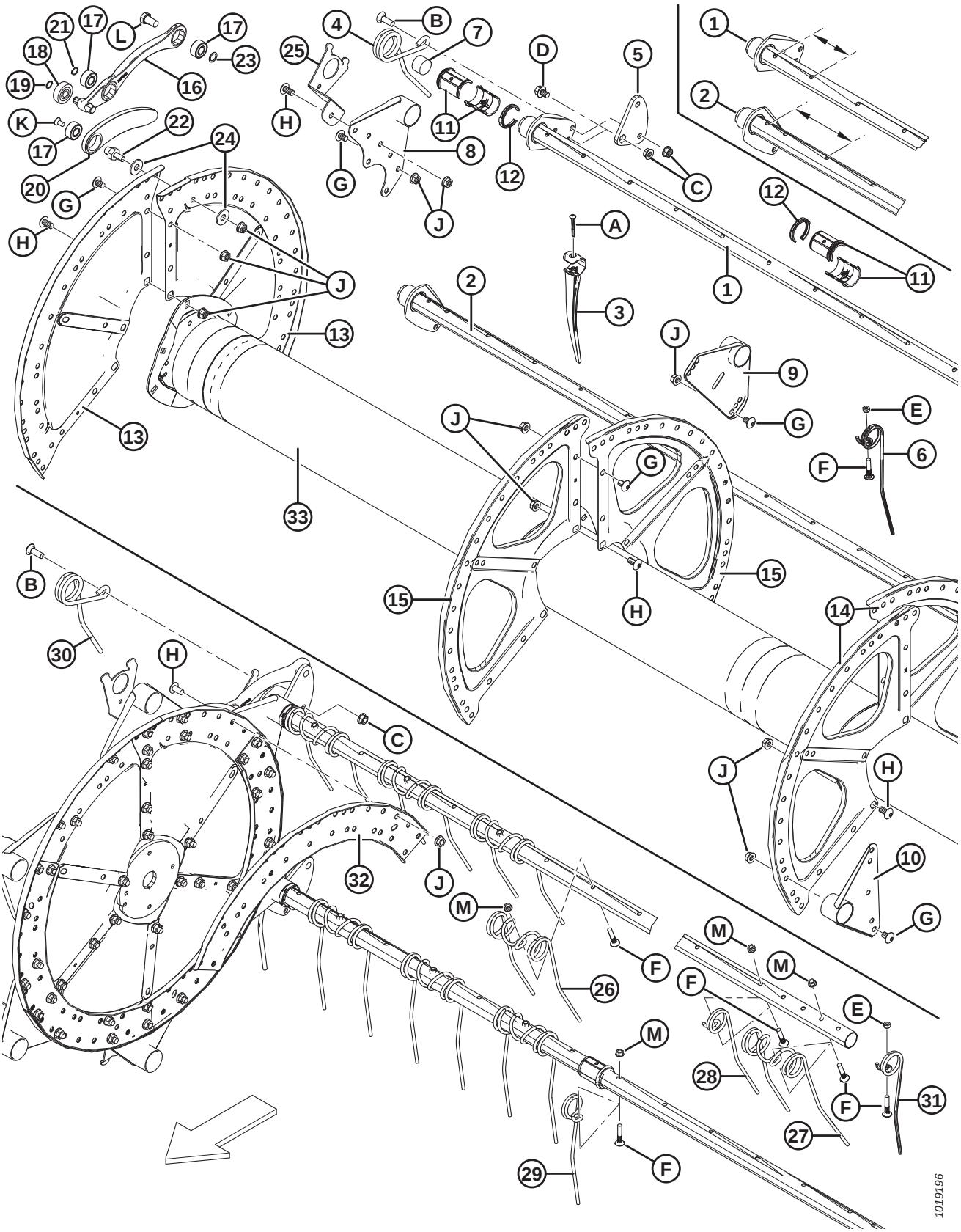
1019196

Ref	Part Number	Description	Qty 5/6/9 Bat	Serial Number
33	137910	CENTER TUBE – 30 FT LH, C/W REFLECTORS (3 DISC REEL) [138]	1	
	137913	CENTER TUBE – 30 FT RH, C/W REFLECTORS (3 DISC REEL) [138]	1	
	137915	CENTER TUBE – 35 FT LH, C/W REFLECTORS (3 DISC REEL) [138]	1	
	137916	CENTER TUBE – 35 FT RH, C/W REFLECTORS (3 DISC REEL) [138]	1	
	245272	CENTER TUBE – 35 FT LH, C/W REFLECTORS (4 DISC REEL) [139]	1	
	245273	CENTER TUBE – 35 FT RH, C/W REFLECTORS (4 DISC REEL) [139]	1	
	137917	CENTER TUBE – 40 FT LH, C/W REFLECTORS (3 DISC REEL) [138]	1	
	137918	CENTER TUBE – 40 FT RH, C/W REFLECTORS (3 DISC REEL) [138]	1	
	245276	CENTER TUBE – 40 FT LH, C/W REFLECTORS (4 DISC REEL) [139]	1	
	245277	CENTER TUBE – 40 FT RH, C/W REFLECTORS (4 DISC REEL) [139]	1	
	137968	CENTER TUBE – 45 FT LH, C/W REFLECTORS (3 DISC REEL) [138]	1	
	137969	CENTER TUBE – 45 FT RH, C/W REFLECTORS (3 DISC REEL) [138]	1	
	253514	CENTER TUBE – 45 FT LH, C/W REFLECTORS (4 DISC REEL) [139]	1	
	253515	CENTER TUBE – 45 FT RH, C/W REFLECTORS (4 DISC REEL) [139]	1	
A	252687	SCREW – SET, TORX, 48° DBL HELIX 1/4 X 2-1/4 ZP		
B	21469	BOLT – RHSN 1/2 NC X 1.5 LG GR 5 ZP		
C	21383	NUT – FLANGE .500-13 UNC (SER FACE)		
D	105066	BOLT – HH FLG (SER FACE) 1/2 -NC X 0.75 GR 5		
E	18669	NUT – HEX LOCK DT 3/8-16 UNC ZP		
F	137118	BOLT – BHRN 3/8 NC, C/W RETAINER		
G	105135	SCREW – MACH, TORX TRUSS HEAD, 1/2 X 0.75 IN. LG		
H	105136	SCREW – MACH, TORX TRUSS HEAD, 1/2 X 1.0 IN. LG		
J	50186	NUT – FLG LOCK SM FACE DT 0.500-13 UNC GR 5		
K	113420	BOLT – CSK TORX 3/8 NC X 3/4 LG [140]		–396189
L	105141	BOLT – SHOULDER, 5/8-18 UNF, 30 MM LG, ZP, GR 5		
M	30228	NUT – FLG DT SMOOTH FACE 0.375-16 UNC		

138. 3 disc.
139. 4 disc.
140. Model year 2021 and later machines use retaining ring MD #273536.

28 Reel Endshield Components

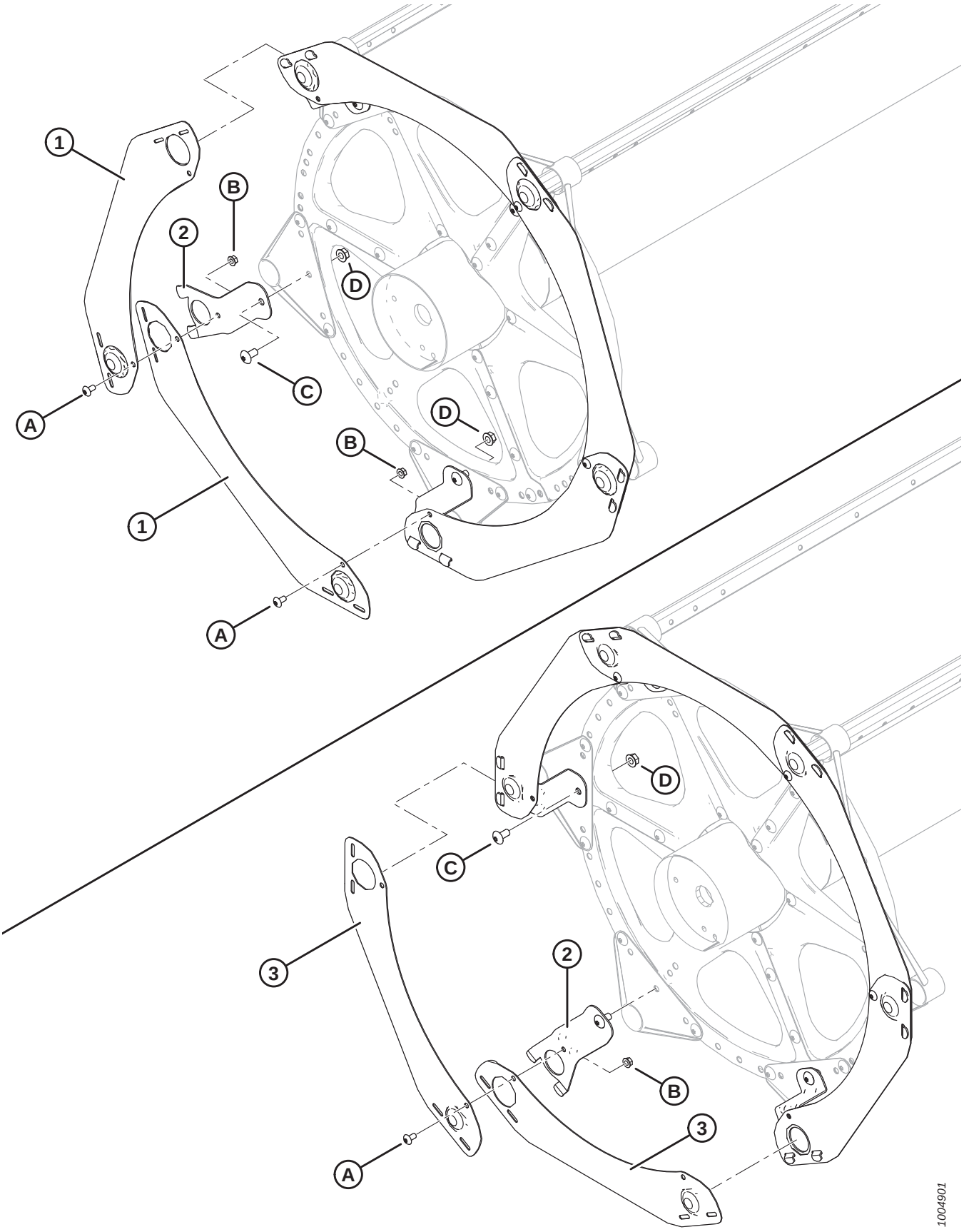

REEL ENDSHIELD COMPONENTS

Ref	Part Number	Description	Qty 5/6/9 Bat	Serial Number
1	164754	ENDSHIELD – 5-BAT SEGMENTED, 5-SERIES	5	
2	164958	SUPPORT – ENDSHIELD REEL	5/6/9	
3	164965	ENDSHIELD – 6-BAT SEGMENTED, 5-SERIES	6	
	164967	ENDSHIELD – 9-BAT SEGMENTED, 5-SERIES	9	
A	135157	SCREW – MACHINE, TORX TRUSS HD 3/8 X .75 IN.		
B	30228	NUT – FLG DT SMOOTH FACE 0.375-16 UNC		
C	105136	SCREW – MACHINE, TORX TRUSS HD 1/2 X 1.0 IN.		
D	50186	NUT – FLANGE LOCK SM FACE DT 0.500-13 UNC GR5		

29 Reel Components – Single Reel, Right Arm

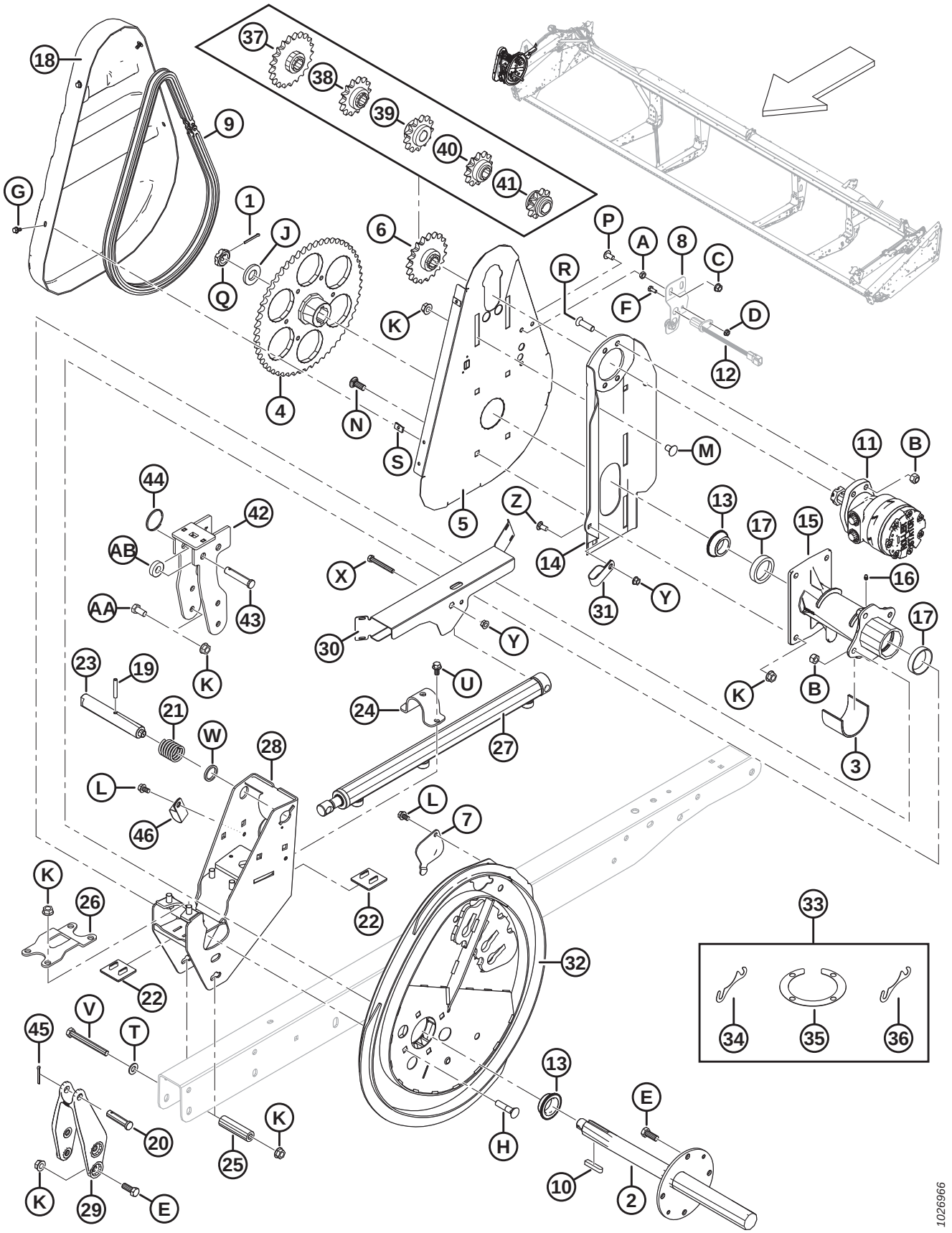

REEL COMPONENTS – SINGLE REEL, RIGHT ARM

Ref	Part Number	Description	Qty	Serial Number
1	18607	PIN – COTTER 5/32 DIA X 1.5 ZP	1	
2	137291	REEL DRIVE SHAFT	1	
3	137315	SLEEVE	1	
4	137347	SPROCKET – MACHINING 56 TOOTH, RC 60	1	
5	137352	SUPPORT – REEL DRIVE BACK PLATE	1	
6	137354	SPROCKET – RC 60, 19 TOOTH	1	
7	137476	COVER – CAM BEARING ACCESS	1	
8	REF	SUPPORT – SWATHER SPEED SENSOR [141]	1	
9	137515	CHAIN – RC-60, 76 PITCHES RIVETED, ENDLESS	1	
10	137721	KEY – REEL DRIVE SHAFT	2	
11	273258	MOTOR – HYD, 15.9 CU.IN. 506 SERIES [142]	1	
	273259	SEAL KIT, MOTOR MD #273258		
	137375	NUT – SLOTTED JAM 1.0-20 UNEF		
	273078	MOTOR – HYD-260 CC, HIGH CAPACITY BEARING [143]	OPT	
	311620	SEAL KIT, MOTOR MD #273078		
	137375	NUT – SLOTTED JAM 1.0-20 UNEF		
12	REF	SENDER – SPEED [141]	1	
13	164213	BEARING – CONE C/W SEAL	2	
14	164750	MOTOR MOUNT WELDT	1	
15	164817	REEL DRIVE HUB C/W BEARING CUPS	1	
16	18671	FITTING – LUBE 1/4-28 UNF	1	
17	164214	BEARING – CUP	2	
18	164955	COVER – REEL DRIVE	1	
19	16681	PIN – SPRING 5/16 DIA X 2.0 LG	1	
20	18725	PIN – CLEVIS	1	
21	137221	SPRING – COMPRESSION	1	
22	137626	PAD – REEL DRIVE WEAR	2	
23	164815	PIN – CAM LATCH	1	
24	164930	CLAMP – FORE AFT	1	
25	164945	SPACER	1	
26	164953	CLAMP – DRIVE HUB	1	
27	164933	CYLINDER – FORE AFT	1	
	113435	SEAL KIT		
28	279979	SUPPORT WELDT – RH CAM	1	
29	164887	CASTING – FORE AFT RH ARM	1	
30	123670	SHIELD – RH SINGLE	1	
31	103738	CLAMP – PVC INSULATED 13/16 IN. TUBE SIZE	1	
32	294634	CAM KIT [144]	1	

141. Used on self-propelled windrower headers only.
142. Motor used for regular torque applications. Nut and key supplied with motor (MD #273258). Permissible to service nut with slotted jam nut (MD #137375).
143. Motor used for high torque applications (high capacity bearing). Nut and key supplied with motor (MD #273078). Permissible to service nut with slotted jam nut (MD #137375).
144. Includes cam shim kit (MD #294631).

REEL COMPONENTS – SINGLE REEL, RIGHT ARM

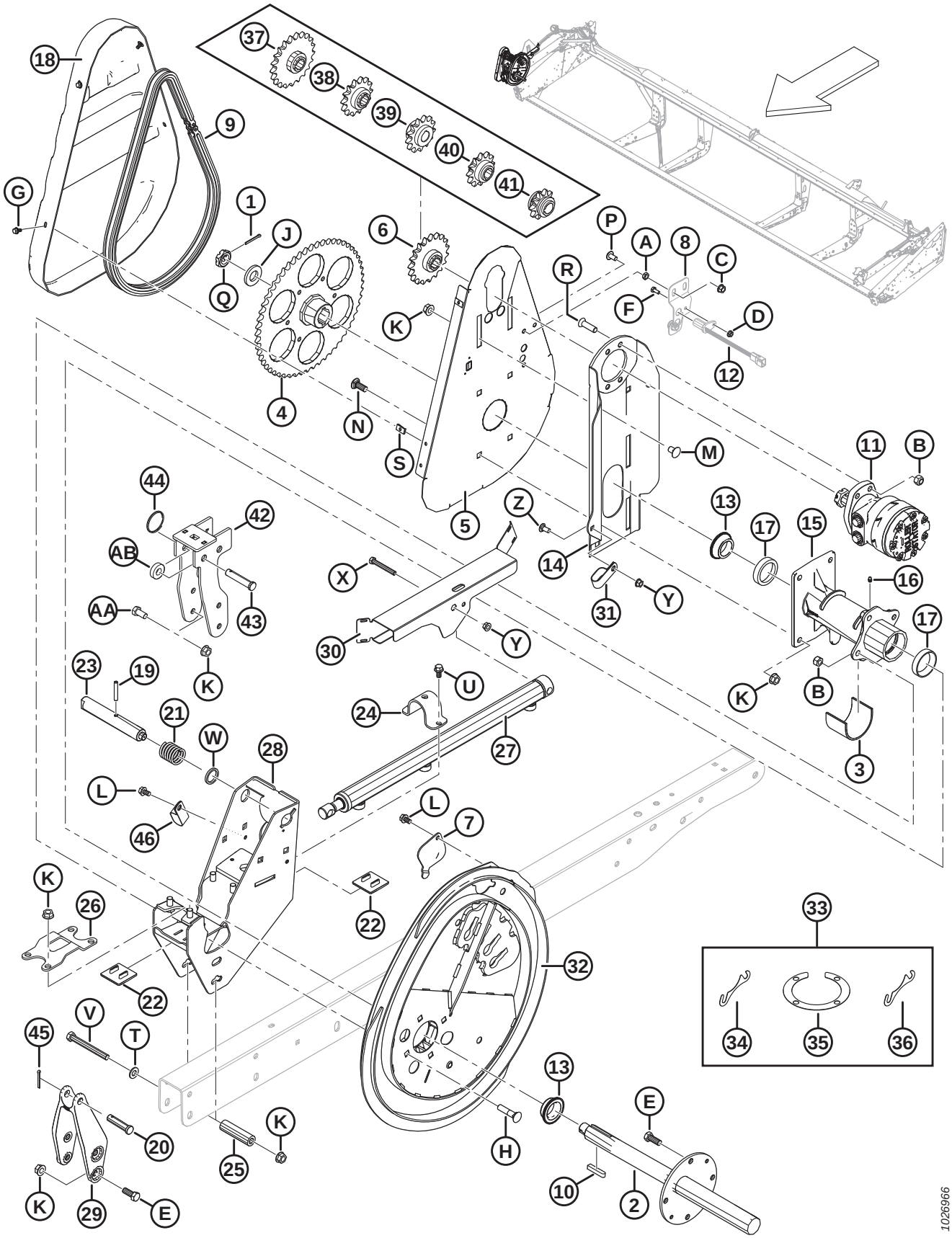

Ref	Part Number	Description	Qty	Serial Number
33	294631	KIT – CAM SHIM [145]	A/R	
34	137753	SHIM RING – 4 BOLT FLANGE	A/R	
35	164061	SHIM – HUB TO CAM	A/R	
36	245199	SHIM – HUB TO CAM	A/R	
37	137350	SPROCKET – 21 TOOTH, RC 60 [146]	OPT	
38	137356	SPROCKET – 14 TOOTH 3000 PSI (DOWN RICE ONLY) [146]	OPT	
39	164126	SPROCKET – 13 TOOTH, RC 60 [146]	OPT	
40	137970	SPROCKET – 12 TOOTH 2500 PSI (DOWN RICE ONLY) [146]	OPT	
41	137348	SPROCKET – 10 TOOTH 2000 PSI (DOWN RICE ONLY) [146]	OPT	
42	304017	BRACKET – RHS CAM WELDT (EXPORT ONLY)	1	
43	18738	PIN – CLEVIS (EXPORT ONLY)	1	
44	118137	RING (EXPORT ONLY)	1	
45	18648	PIN – COTTER 3/16 DIA X 1.25 ZP	1	
46	50022	CLAMP – INSULATED 15/16 INCH	1	
A	18664	NUT – HEX JAM 3/8-16 UNC GR 5 ZP		
B	18697	NUT – HEX LOCK DT .500-13 UNC		
C	21452	NUT – FLANGE (SER FACE) .375-16 UNC		
D	21455	NUT – FLG (SER FACE) 1/4 NC GR 5 ZP		
E	21491	BOLT – HH 1/2 NC X 1.25 LG GR 5 ZP		
F	21572	BOLT – HEX HD 1/4 NC X 1.25 LG GR 5 ZP		
G	21968	BOLT – HH FLG (SER FACE) 1/4 NC X 0.5 GR 5 ZP		
H	30027	BOLT – RHSN 1/2 NC X 2.25 LG GR 5 ZP		
J	31774	WASHER – FLAT		
K	50186	NUT – FLANGE LOCK SM FACE DT 0.500-13 UNC GR 5		
L	101898	SCREW – HEX WASH HD THD ROLLING 3/8 NC X 5/8		
M	105069	BOLT – RHSSN 1/2 NC X 0.75 GR 5 ZP		
N	114233	BOLT – RHSSN 1/2 NC X 1.25 GR 5 ZP		
P	135157	SCREW – MACHINE		
Q	137375	NUT – SLOTTED JAM 1.0 IN-20 UNEF-ZN PL		
R	137503	BOLT – CSK SOCK. 1/2 NC X 1.75 GR. 5 ZP		
S	137702	NUT – 1/4-20 SHEET METAL		
T	18599	WASHER – SAE FLAT 17/32 I.D. X 1-1/16 IN. O.D. ZP		
U	21821	BOLT – HH FLG (SER FACE) 3/8 NC X 0.75 GR 5 ZP		
V	30209	BOLT – HH 1/2 NC X 4.5 LG GR 5 ZP		
W	273304	WASHER – CAM LATCH		
X	30035	BOLT – HH 3/8 NC X 2.75 LG GR 5 ZP		
Y	30228	NUT – FLANGE DT SMOOTH FACE 0.375-16 UNC		
Z	21863	BOLT – RHSSN 3/8 NC X 0.75 LG GR 5 ZP		

145. Includes four shims (MD #164061), two shim rings (MD #137753), and shim (MD #245199).
146. High-torque, steel-fingered reels only. Required on combines that have low reel drive pressure.

REEL COMPONENTS – SINGLE REEL, RIGHT ARM

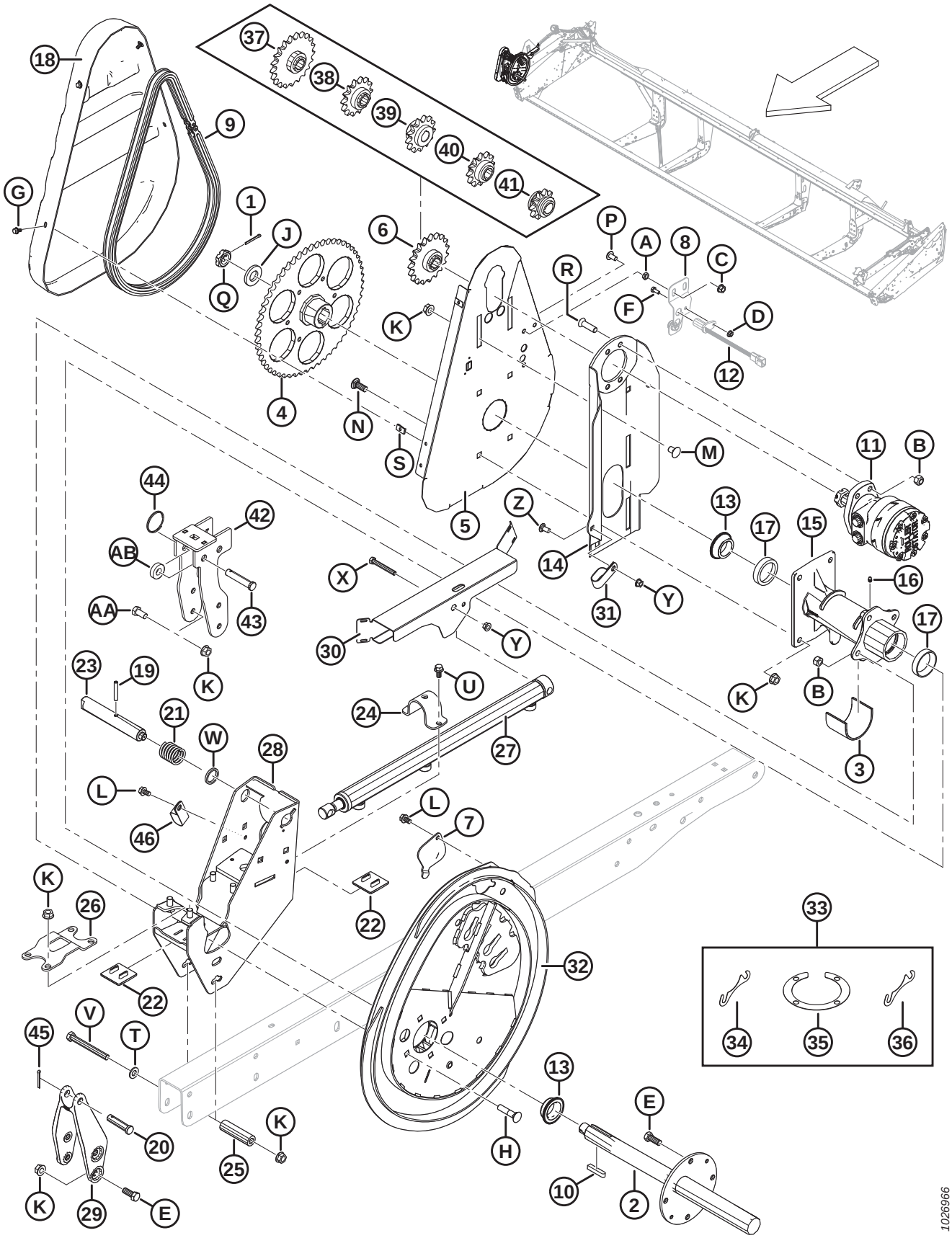

REEL COMPONENTS – SINGLE REEL, RIGHT ARM

Ref	Part Number	Description	Qty	Serial Number
AA	21575	BOLT – HH 1/2 NC X 1.0 LG GR 5 ZP		
AB	40915	WASHER – FLAT		

30 Reel Components – Double Reel, Right Arm

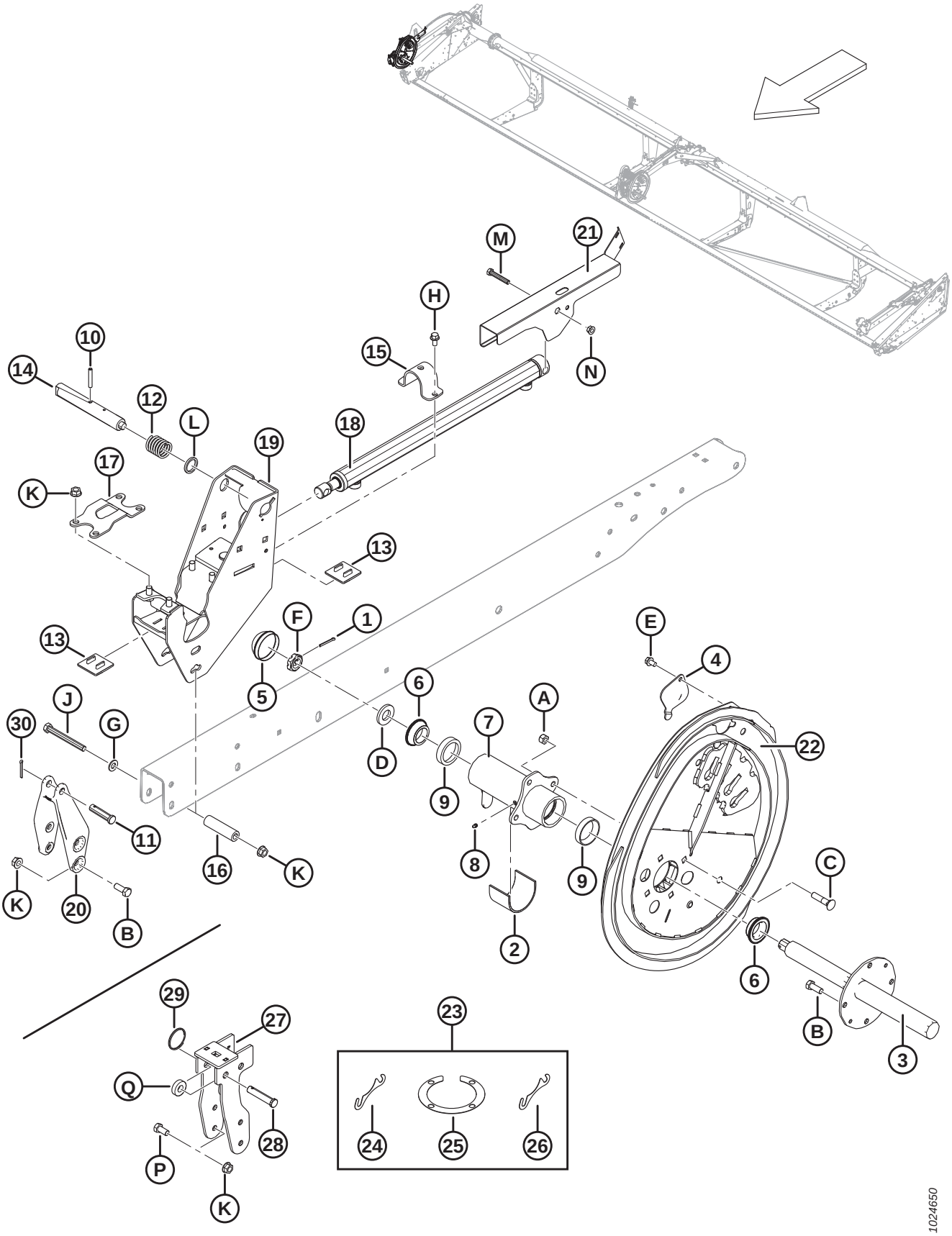

REEL COMPONENTS – DOUBLE REEL, RIGHT ARM

Ref	Part Number	Description	Qty	Serial Number
1	18648	PIN – COTTER 3/16 DIA X 1.25 ZP	1	
2	137315	SLEEVE	1	
3	137451	REEL DRIVE SHAFT RH	1	
4	137476	COVER – CAM BEARING ACCESS	1	
5	140250	CAP – DUST	1	
6	164213	BEARING – CONE C/W SEAL	2	
7	164821	HUB – RH REEL C/W CUPS	1	
8	18671	FITTING – LUBE 1/4-28 UNF	1	
9	164214	BEARING – CUP	2	
10	16681	PIN – SPRING 5/16 DIA X 2.0 LG	1	
11	18725	PIN – CLEVIS	1	
12	137221	SPRING – COMPRESSION	1	
13	137626	PAD – REEL DRIVE WEAR	2	
14	137456	PIN – CAM LATCH	1	
15	164930	CLAMP – FORE AFT	1	
16	164945	SPACER	1	
17	164953	CLAMP – DRIVE HUB	1	
18	164933	CYLINDER – FORE AFT	1	
	113435	SEAL KIT		
19	279979	SUPPORT WELDT – RH CAM	1	
20	164887	CASTING – FORE AFT RH ARM	1	
21	123627	SHIELD – RH DUAL (RH ARM ON RH REEL)	1	
22	294634	CAM KIT [147]	1	
23	294631	KIT – CAM SHIM [148]	A/R	
24	164061	SHIM – HUB TO CAM (1.2 MM)	A/R	
25	137753	SHIM RING – 4 BOLT FLANGE	A/R	
26	245199	SHIM – HUB TO CAM (0.6 MM)	A/R	
27	304017	BRACKET – RHS CAM WELDT (EXPORT ONLY)	1	
28	18624	PIN – CLEVIS (EXPORT ONLY)	1	
29	118137	RING (EXPORT ONLY)	1	
30	18648	PIN – COTTER 3/16 DIA X 1.25 ZP	1	
A	18697	NUT – HEX LOCK DT .500-13 UNC		
B	21491	BOLT – HH 1/2 NC X 1.25 LG GR 5 ZP		
C	30027	BOLT – RHSN 1/2 NC X 2.25 LG GR 5 ZP		
D	31774	WASHER – FLAT		
E	101898	SCREW – HEX WASH HD THD ROLLING 3/8 NC X 5/8		
F	137375	NUT – SLOTTED JAM 1.0 IN.-20 UNEF-ZN PL		
G	18599	WASHER – SAE FLAT 17/32 I.D. X 1-1/16 IN. O.D. ZP		
H	21821	BOLT – HH FLG (SER FACE) 3/8 NC X 0.75 GR 5 ZP		
J	30209	BOLT – HH 1/2 NC X 4.5 LG GR 5 ZP		

147. Includes cam shim kit (MD #294631).
148. Includes four shims (MD #164061), two shim rings (MD #137753), and shim (MD #245199).

REEL COMPONENTS – DOUBLE REEL, RIGHT ARM

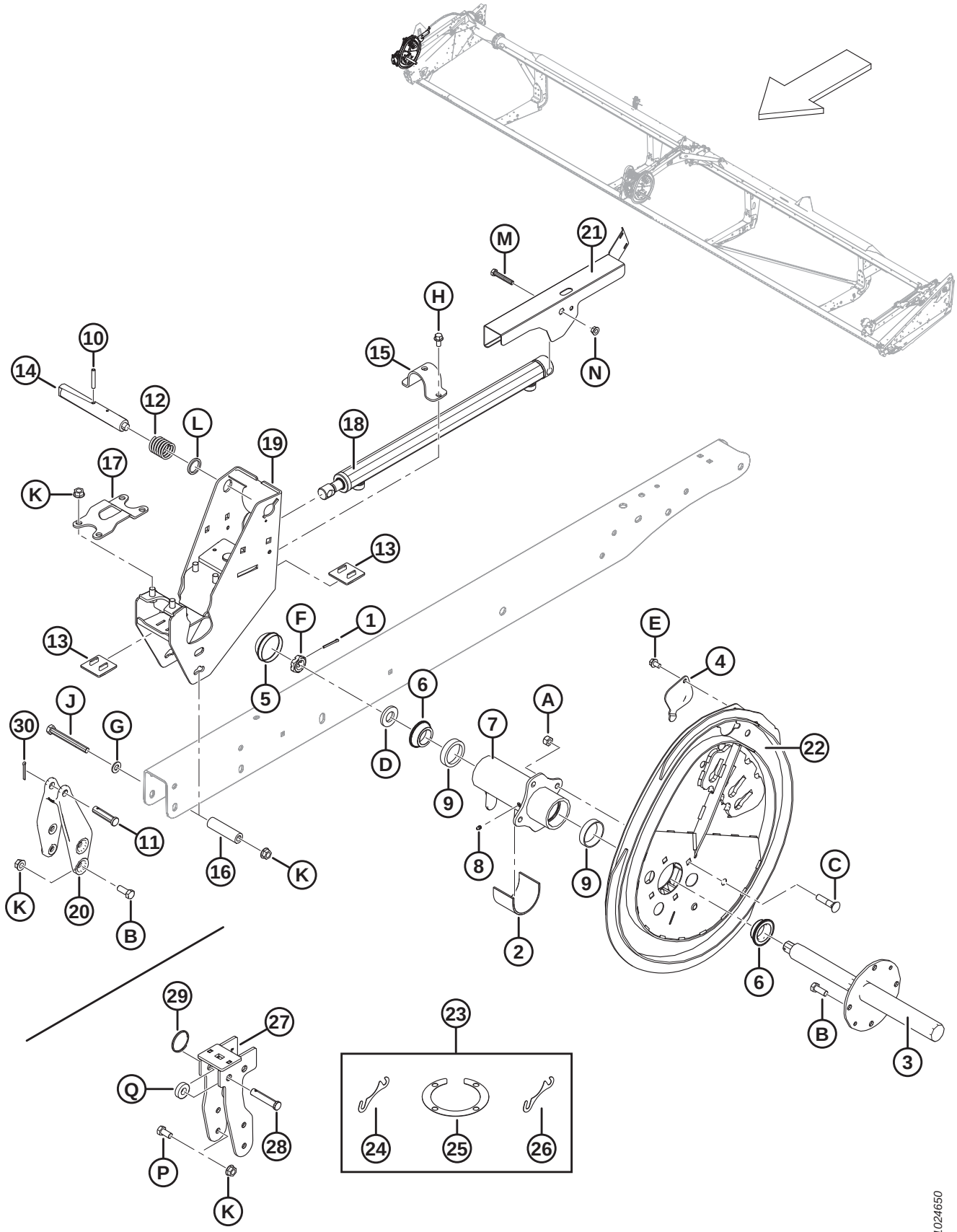

Ref	Part Number	Description	Qty	Serial Number
K	50186	NUT – FLANGE LOCK SM FACE DT 0.500-13 UNC GR 5		
L	273304	WASHER – CAM LATCH		
M	20055	BOLT – HH 3/8 NC X 2.25 LG GR 5 ZP		
N	30228	NUT – FLANGE DT SMOOTH FACE 0.375-16 UNC		
P	21575	BOLT – HH 1/2 NC X 1.0 LG GR 5 ZP		
Q	40915	WASHER – FLAT		

31 Reel Components – Double Reel, Center Arm

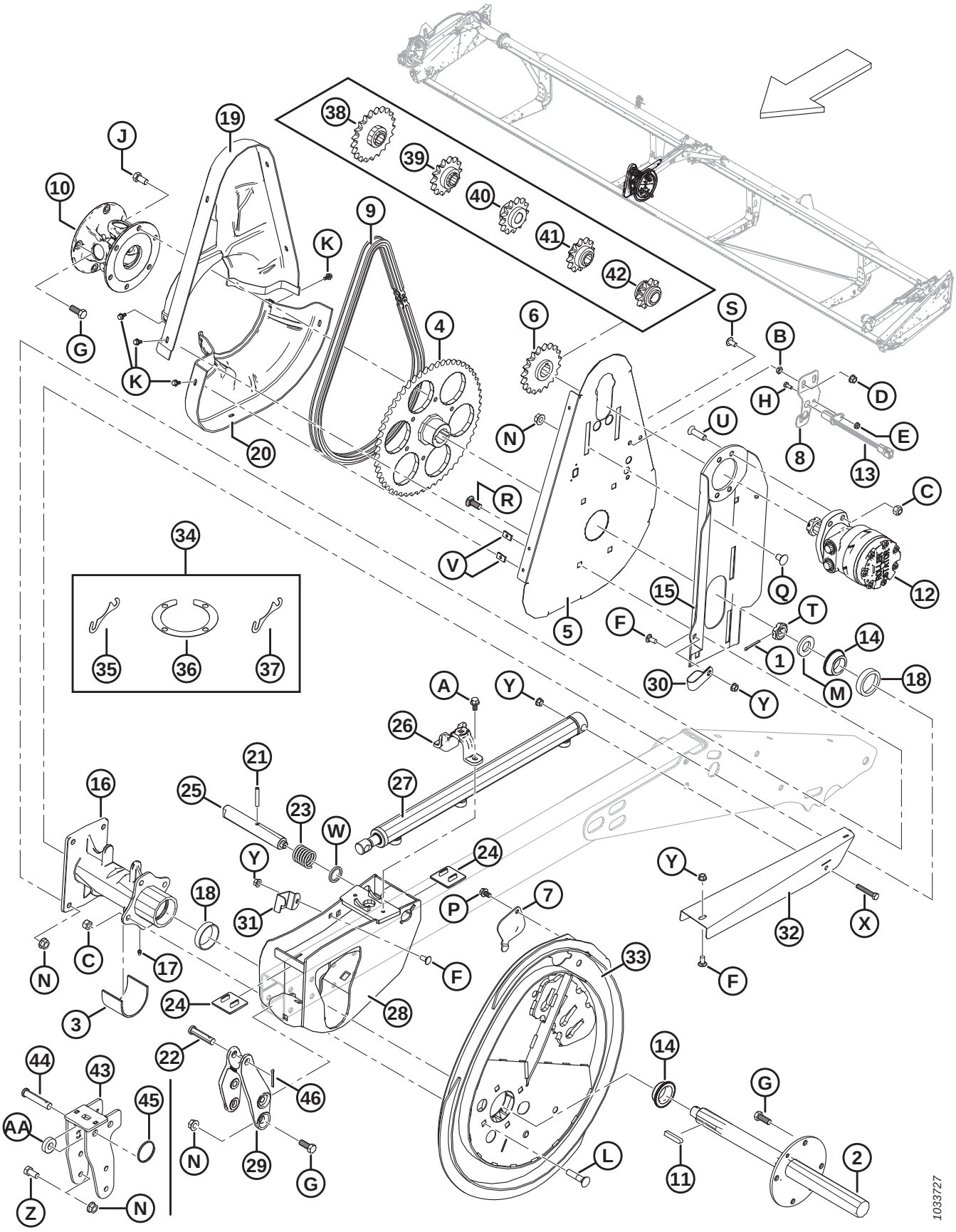

Ref	Part Number	Description	Qty	Serial Number
1	18648	PIN – COTTER 3/16 DIA X 1.25 ZP	1	
2	137291	REEL DRIVE SHAFT	1	
3	137315	SLEEVE	1	
4	137347	SPROCKET – MACHINING 56 TOOTH, RC 60	1	
	164141	SPROCKET – MACHINING 48 TOOTH, RC 60 [149]	1	
5	137352	SUPPORT – REEL DRIVE BACK PLATE	1	
6	137354	SPROCKET – RC 60 19 TOOTH	1	
7	137476	COVER – CAM BEARING ACCESS	1	
8	REF	SUPPORT – SWATHER SPEED SENSOR [150]	1	
9	137515	CHAIN – RC-60, 76 PITCHES RIVETED, ENDLESS	1	
	164109	CHAIN – RC-60, 70 PITCHES RIVITED, ENDLESS [149]	1	
10	137691	REEL DRIVE U JOINT	1	
	137825	CROSS JOURNAL ASSEMBLY		
	137826	YOKE – FLANGE, 4 BOLT		
	137827	YOKE – FLANGE, 6 BOLT		
11	137721	KEY – REEL DRIVE SHAFT	2	
12	273258	MOTOR – HYD, 15.9 CU.IN. 506 SERIES [151]	1	
	273259	SEAL KIT, MOTOR MD #273258		
	137375	NUT – SLOTTED JAM 1.0-20 UNEF		
	273078	MOTOR – HYD-260 CC, HIGH CAPACITY BEARING [152]	OPT	
	311620	SEAL KIT, MOTOR MD #273078		
	137375	NUT – SLOTTED JAM 1.0-20 UNEF		
13	REF	SENDER – SPEED [150]	1	
14	164213	BEARING – CONE C/W SEAL	2	
15	164750	MOTOR MOUNT WELDT	1	
16	164817	REEL DRIVE HUB – C/W BEARING CUPS	1	
17	18671	FITTING – LUBE 1/4-28 UNF	1	
18	164214	BEARING – CUP	2	
19	164947	SHIELD – REEL DRIVE TOP HALF	1	
20	164948	SHIELD – LOWER DUAL REEL DRIVE	1	
21	16681	PIN – SPRING 5/16 DIA X 2.0 LG	1	
22	18725	PIN – CLEVIS	1	
23	137221	SPRING – COMPRESSION	1	
24	137626	PAD – REEL DRIVE WEAR	2	
25	164815	PIN – CAM LATCH	1	
26	164855	CASTING – CLAMP FORE AFT CYLINDER	1	
27	164933	CYLINDER – FORE AFT	1	
	113435	SEAL KIT		

149. Double-reel, high-torque, high-speed reels only.
150. Used on self-propelled windrower headers only.
151. Motor used for regular torque applications. Nut and key supplied with motor (MD #273258). Permissible to service nut with slotted jam nut (MD #137375).
152. Motor used for high torque applications (high capacity bearing). Nut and key supplied with motor (MD #273078). Permissible to service nut with slotted jam nut (MD #137375).

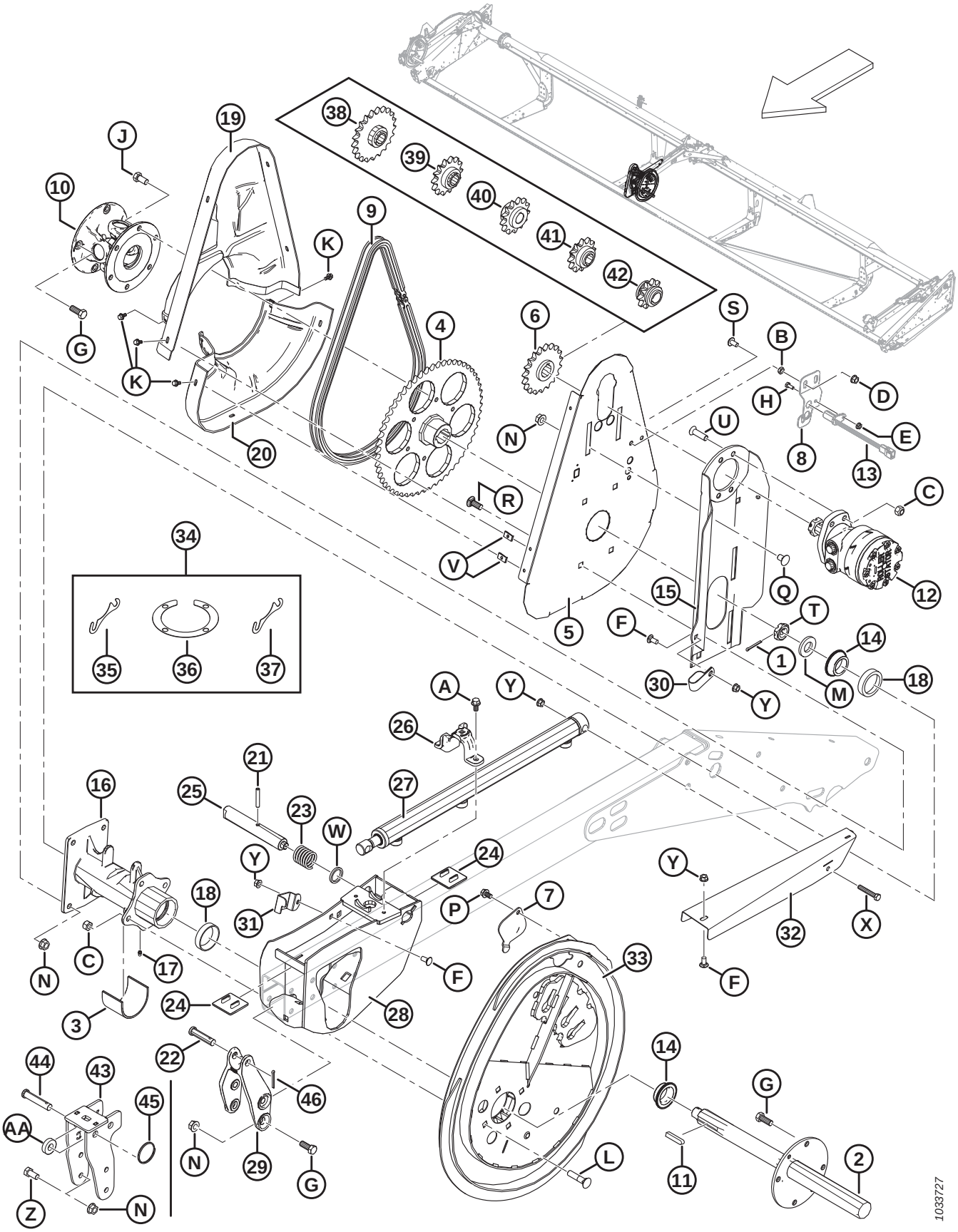
1033727

Ref	Part Number	Description	Qty	Serial Number
28	253092	SUPPORT WELDT – DR DRIVE	1	
29	164885	CASTING – FORE AFT CENTER ARM	1	
30	103738	CLAMP – PVC INSULATED 13/16 IN. TUBE SIZE	1	
31	164858	RETAINER – HOSE	1	
32	294065	SHIELD – FORE AFT HOSES DUAL REEL DRIVE	1	
33	294634	CAM KIT [153]	1	
34	294631	KIT – CAM SHIM [154]	A/R	
35	164061	SHIM – HUB TO CAM (1.2 MM)	A/R	
36	137753	SHIM RING – 4 BOLT FLANGE	A/R	
37	245199	SHIM – HUB TO CAM (0.6 MM)	A/R	
38	137350	SPROCKET – 21 TOOTH, RC 60 [155]	OPT	
39	137356	SPROCKET – 14 TOOTH, 3000 PSI (DOWN RICE ONLY) [155]	OPT	
40	164126	SPROCKET – 13 TOOTH, RC 60 [155]	OPT	
41	137970	SPROCKET – 12 TOOTH, 2500 PSI (DOWN RICE ONLY) [155]	OPT	
42	137348	SPROCKET – 10 TOOTH, 2000 PSI (DOWN RICE ONLY) [155]	OPT	
43	304018	BRACKET – CTR CAM WELDT (EXPORT ONLY)	1	
44	18624	PIN – CLEVIS (EXPORT ONLY)	1	
45	118137	RING (EXPORT ONLY)	1	
46	18648	PIN – COTTER 3/16 DIA X 1.25 ZP	1	
A	21821	BOLT – HH FLG (SER FACE) 3/8 NC X 0.75 GR 5 ZP		
B	18664	NUT – HEX JAM 3/8-16 UNC GR 5 ZP		
C	18697	NUT – HEX LOCK DT .500-13 UNC		
D	21452	NUT – FLANGE (SER FACE) .375-16 UNC		
E	21455	NUT – FLG (SER FACE) 1/4 NC GR 5 ZP		
F	21863	BOLT – RHSSN 3/8 NC X 0.75 LG GR 5 ZP		
G	21491	BOLT – HH 1/2 NC X 1.25 LG GR 5 ZP		
H	21572	BOLT – HEX HD 1/4 NC X 1.25 LG GR 5 ZP		
J	21575	BOLT – HH 1/2 NC X 1.0 LG GR 5 ZP		
K	21968	BOLT – HH FLG (SER FACE) 1/4 NC X 0.5 GR 5 ZP		
L	30027	BOLT – RHSN 1/2 NC X 2.25 LG GR 5 ZP		
M	31774	WASHER – FLAT		
N	50186	NUT – FLANGE LOCK SM FACE DT 0.500-13 UNC GR 5		
P	101898	SCREW – HEX WASH HD THD ROLLING 3/8 NC X 5/8		
Q	105069	BOLT – RHSSN 1/2 NC X 0.75 GR 5 ZP		
R	114233	BOLT – RHSSN 1/2 NC X 1.25 GR 5 ZP		
S	135157	SCREW – MACHINE, TORX TRUSS HEAD, 3/8 IN., .75 IN LG		
T	137375	NUT – SLOTTED JAM 1.0 IN-20 UNEF-ZN PL		
U	137503	BOLT – CSK SOCK. 1/2 NC X 1.75 GR. 5 ZP		

153. Includes cam shim kit (MD #294631).
154. Includes four shims (MD #164061), two shim rings (MD #137753), and shim (MD #245199).
155. High-torque, steel-fingered reels only. Required on combines that have low reel drive pressure.

REEL COMPONENTS – DOUBLE REEL, CENTER ARM

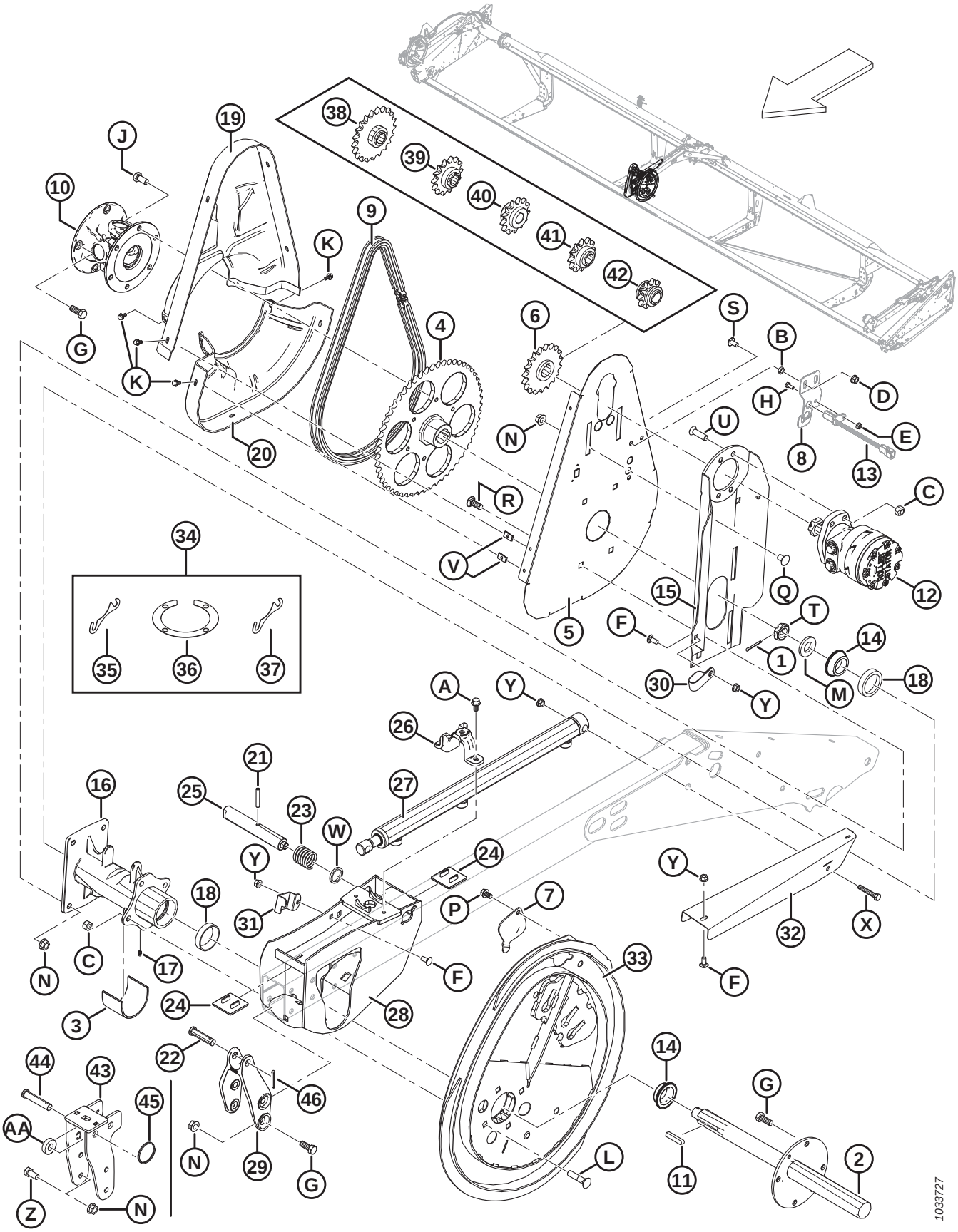

Ref	Part Number	Description	Qty	Serial Number
V	137702	NUT – 1/4-20 SHEET METAL		
W	273304	WASHER – CAM LATCH		
X	20055	BOLT – HH 3/8 NC X 2.25 LG GR 5 ZP		
Y	30228	NUT – FLANGE DT SMOOTH FACE 0.375-16 UNC		
Z	21575	BOLT – HH 1/2 NC X 1.0 LG GR 5 ZP		
AA	40915	WASHER – FLAT		

32 Reel Components – Single/Double Reel, Left Arm

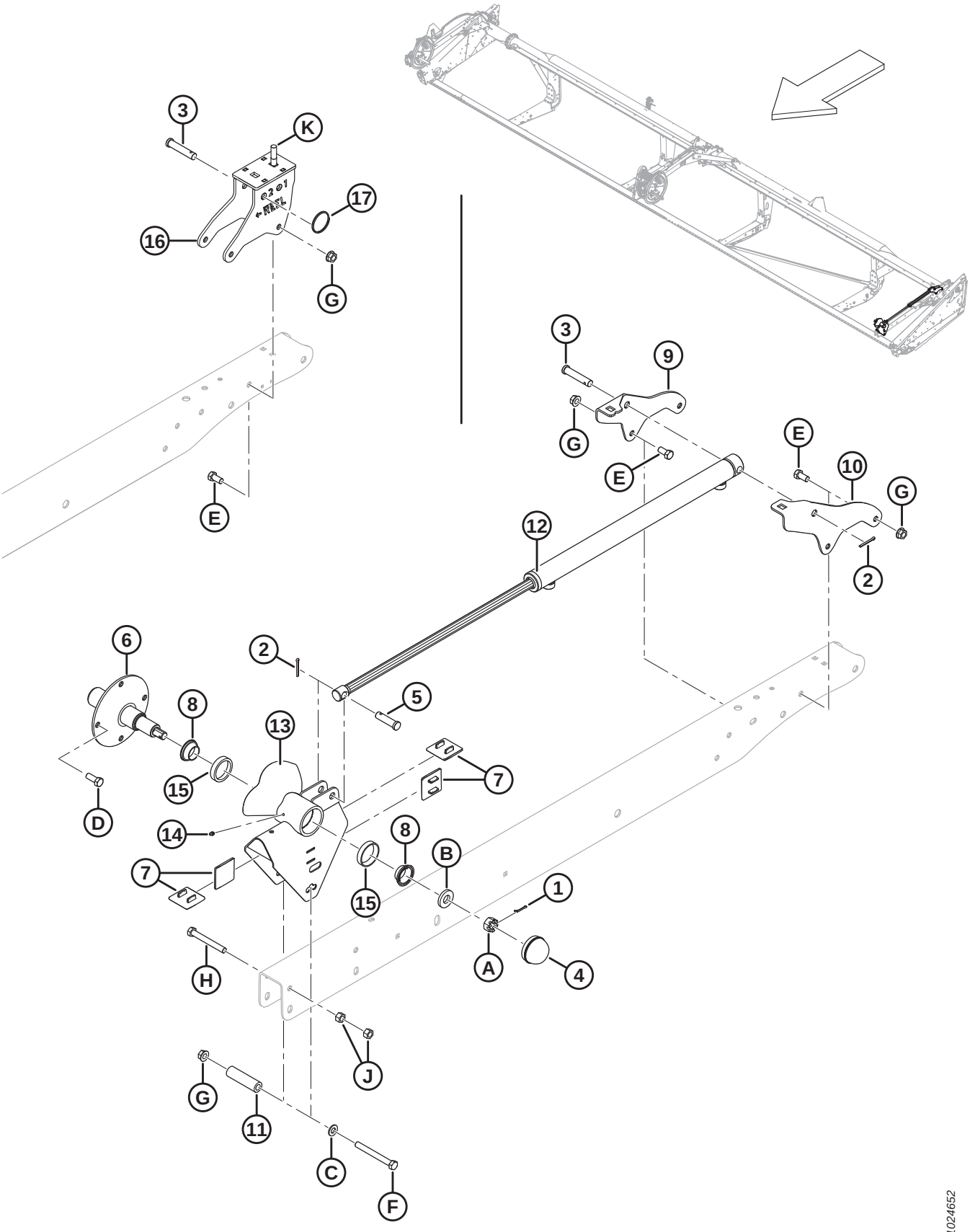

REEL COMPONENTS – SINGLE/DOUBLE REEL, LEFT ARM

Ref	Part Number	Description	Qty	Serial Number
1	18605	PIN – COTTER 1/8 DIA X 1 ZP	1	
2	18648	PIN – COTTER 3/16 DIA X 1.25 ZP	2	
3	18624	PIN – CLEVIS	1	
4	30520	CAP – DUST	1	
5	103879	PIN – CLEVIS	1	
6	105364	SHAFT – TAIL END	1	
7	137626	PAD – REEL DRIVE WEAR	4	
8	164216	BEARING – CONE C/W SEAL	2	
9	164780	SUPPORT – FORE/AFT LH ARM, INBOARD SIDE	1	
10	164781	SUPPORT – FORE/AFT LH ARM, OUTBOARD SIDE	1	
11	164945	SPACER	1	
12	164934	CYLINDER – FORE AFT	1	
	113435	SEAL KIT		
13	253290	SUPPORT – TAIL C/W CUPS	1	
14	18671	FITTING – LUBE 1/4-28 UNF	1	
15	164215	BEARING – CUP ROLLER	2	
16	304019	BRACKET – LHS CAM WELDT (EXPORT ONLY)	1	
17	118137	RING (EXPORT ONLY)	1	
A	5512	NUT – HEX SLOTTED .750-16 UNF ZN PL		
B	16235	WASHER – FLAT		
C	18599	WASHER – SAE FLAT 17/32 I.D. X 1-1/16 IN. O.D. ZP		
D	21491	BOLT – HH 1/2 NC X 1.25 LG GR 5 ZP		
E	21575	BOLT – HH 1/2 NC X 1.0 LG GR 5 ZP		
F	30209	BOLT – HH 1/2 NC X 4.5 LG GR 5 ZP		
G	50186	NUT – FLANGE LOCK SM FACE DT 0.500-13 UNC GR 5		
H	21589	BOLT – HH 1/2 NC X 4.0 LG GR 5 ZP		
J	18591	NUT – HEX 1/2-13 UNC GR 5 ZP		
K	30027	BOLT – RHSN 1/2 NC X 2.25 LG GR 5 ZP		

33 Reel Support Arms and Lift Cylinders

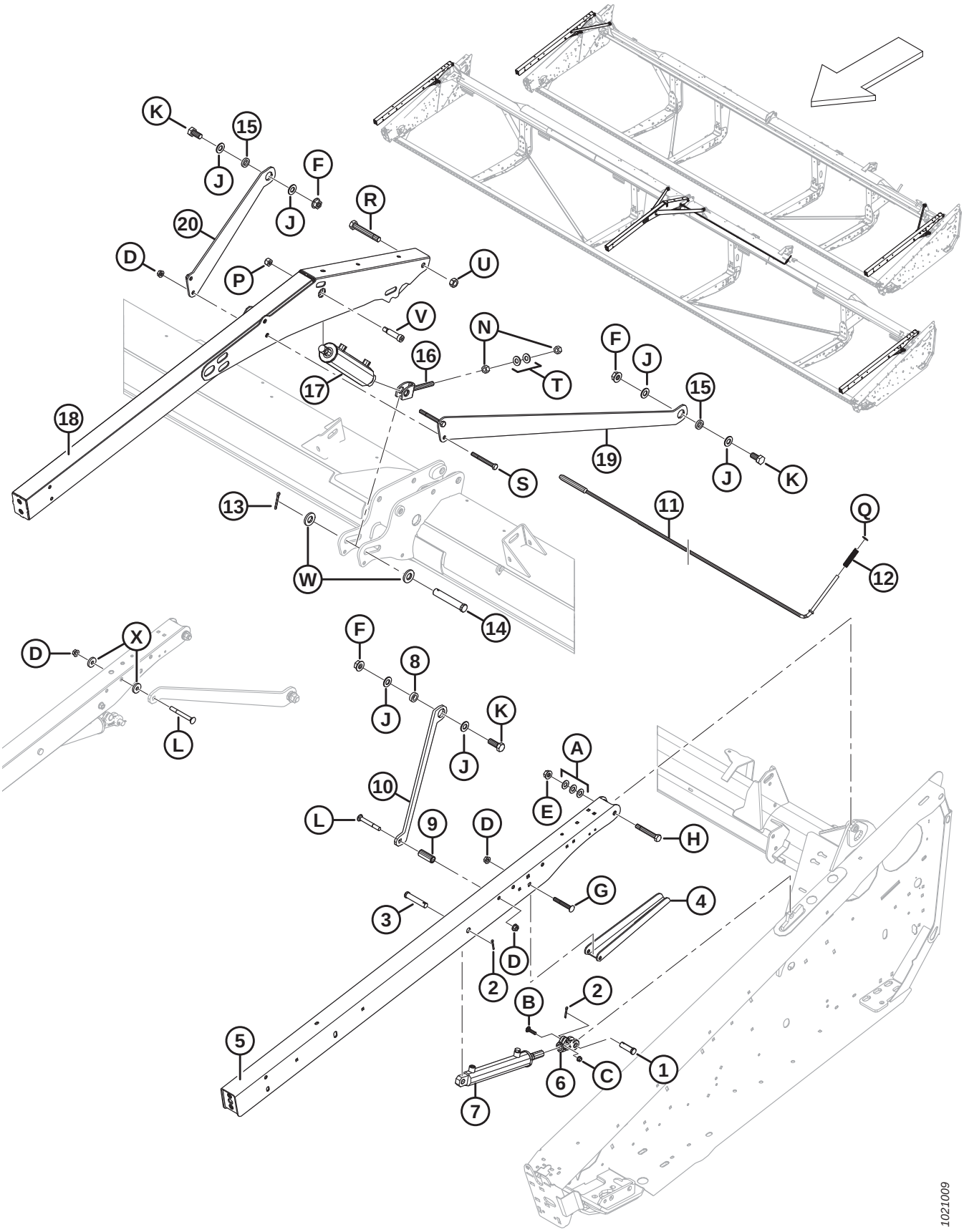

Ref	Part Number	Description	Qty	Serial Number
1	18626	PIN – CLEVIS	2	
2	18648	PIN – COTTER 3/16 DIA X 1.25 ZP	4	
3	20312	PIN – CLEVIS	2	
4	304222	SUPPORT – REEL PROP	2	
5	255282	ARM – OUTER C/W DECALS [156]	2	
	255788	ARM – OUTER C/W DECALS (EXPORT ONLY) [156]	2	
6	304314	CLEVIS	2	
7	245992	CYLINDER – LH HYDRAULIC	1	
	132474	SEAL KIT		
	245993	CYLINDER – RH HYDRAULIC	1	
	132475	SEAL KIT		
8	172158	SPACER – DIAGONAL BRACE (SINGLE REEL ONLY)	2	
9	174333	SPACER (SINGLE REEL ONLY)	2	
10	172155	BRACE – DIAGONAL (SINGLE REEL ONLY)	2	
	255831	BRACE – DIAGONAL SHORT (EXPORT SINGLE REEL ONLY)	2	
11	304228	ROD – CENTER PROP WELDT (DOUBLE REEL ONLY)	1	
12	18349	SPRING – COMPRESSION (DOUBLE REEL ONLY)	1	
13	18609	PIN – COTTER 1/4 DIA X 2 ZP (DOUBLE REEL ONLY)	1	
14	49341	PIN – CLEVIS (DOUBLE REEL ONLY)	1	
15	145461	SPACER – DIAGONAL BRACE (DOUBLE REEL ONLY)	2	
16	253412	CLEVIS WELDT (DOUBLE REEL ONLY)	1	
17	245671	CYLINDER – HYD, CENTER ARM (DOUBLE REEL ONLY)	1	
	132476	SEAL KIT		
18	164773	ARM – CENTER WELDMENT (DOUBLE REEL ONLY)	1	
19	125435	BRACE – LH REEL ARM (DOUBLE REEL ONLY)	1	
	164825	BRACE – SHORT RH (EXPORT DOUBLE REEL ONLY)	1	
20	125433	BRACE – RH REEL ARM (DOUBLE REEL ONLY)	1	
	164800	BRACE – SHORT LH (EXPORT DOUBLE REEL ONLY)	1	
A	18600	WASHER – SAE FLAT 21/32 ID X 1 5/16 IN OD ZP		
B	21484	BOLT – RHSN 3/8-16 X 1.5-GR5-ZP		
C	30228	NUT – FLANGE DT SMOOTH FACE 0.375-16 UNC		
D	50186	NUT – FLANGE LOCK SM FACE DT 0.500-13 UNC GR5		
E	50225	NUT – FLANGE DT SMOOTH FACE .625-11 UNC		
F	135367	NUT – FLANGE DT SMTH FACE 0.75-10 UNC GR. G		
G	151192	BOLT – RHSSN 1/2 NC X 3.5 LG GR 5 ZP		
H	172922	BOLT – HH 5/8 NC X 4.125 LG GR 5 ZP		
J	176009	WASHER – NORDLOCK 3/4 IN. SP		
K	30512	BOLT – HEX HD 3/4-10 X 2.0 GR5-AA1J (SINGLE REEL ONLY)		
L	30824	BOLT – RHSN 1/2 NC X 4.0 LG GR 5 ZP (SINGLE REEL ONLY)		
	129847	BOLT – RHSN 1/2 NC X 4.5 LG GR 5 ZP (EXPORT SINGLE REEL ONLY)		

156. Includes decals (MD #131393, 174632).

REEL SUPPORT ARMS AND LIFT CYLINDERS

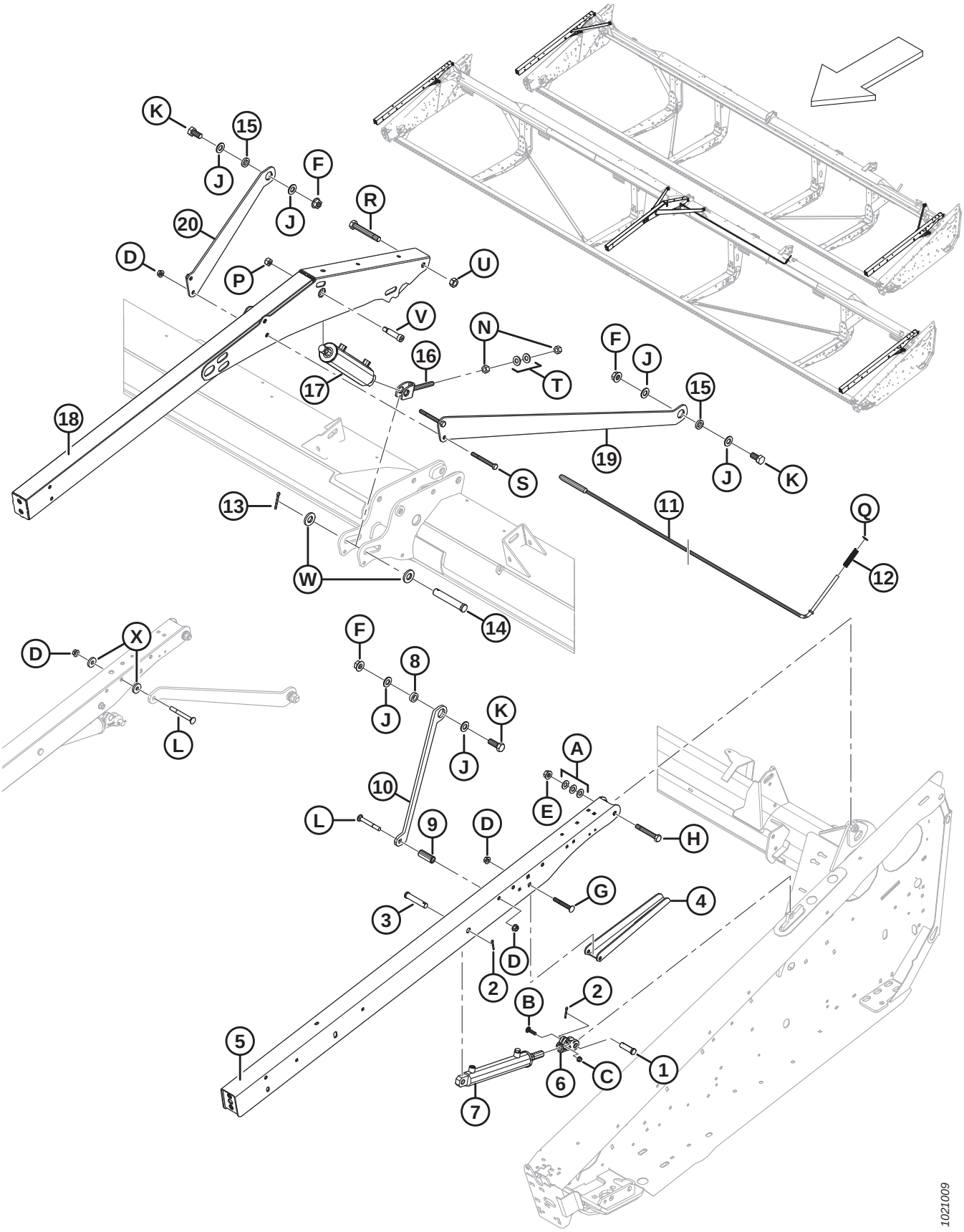

Ref	Part Number	Description	Qty	Serial Number
N	18592	NUT – HEX 5/8-11 UNC GR 5 ZP (DOUBLE REEL ONLY)		
P	18666	NUT – HEX LOCK DT 5/8-11 UNC ZP (DOUBLE REEL ONLY)		
Q	18688	WASHER – SAE FLAT 0.47 IN. ID X 0.92 IN OD ZP (DOUBLE REEL ONLY)		
R	30549	BOLT – HEX HD 3/4-10 X 5.5 GR5-AA1J (DOUBLE REEL ONLY)		
S	30209	BOLT – HH 1/2 NC X 4.5 LG GR 5 ZP (DOUBLE REEL ONLY)		
T	30441	WASHER – HARDENED (DOUBLE REEL ONLY)		
U	102636	NUT – HEX DT .750-10 UNC SIDE LOCK (DOUBLE REEL ONLY)		
V	135737	BOLT – SHOULDER SOCKET HEAD-3/4 X 2.25 LG (DOUBLE REEL ONLY)		
W	174858	WASHER – FLAT (DOUBLE REEL ONLY)		
X	18770	WASHER – FLAT (EXPORT SINGLE REEL ONLY)		

34 Reel Drive Hydraulics – Lift and Fore-Aft – Single Reel (D120, D125, D130, and D135)

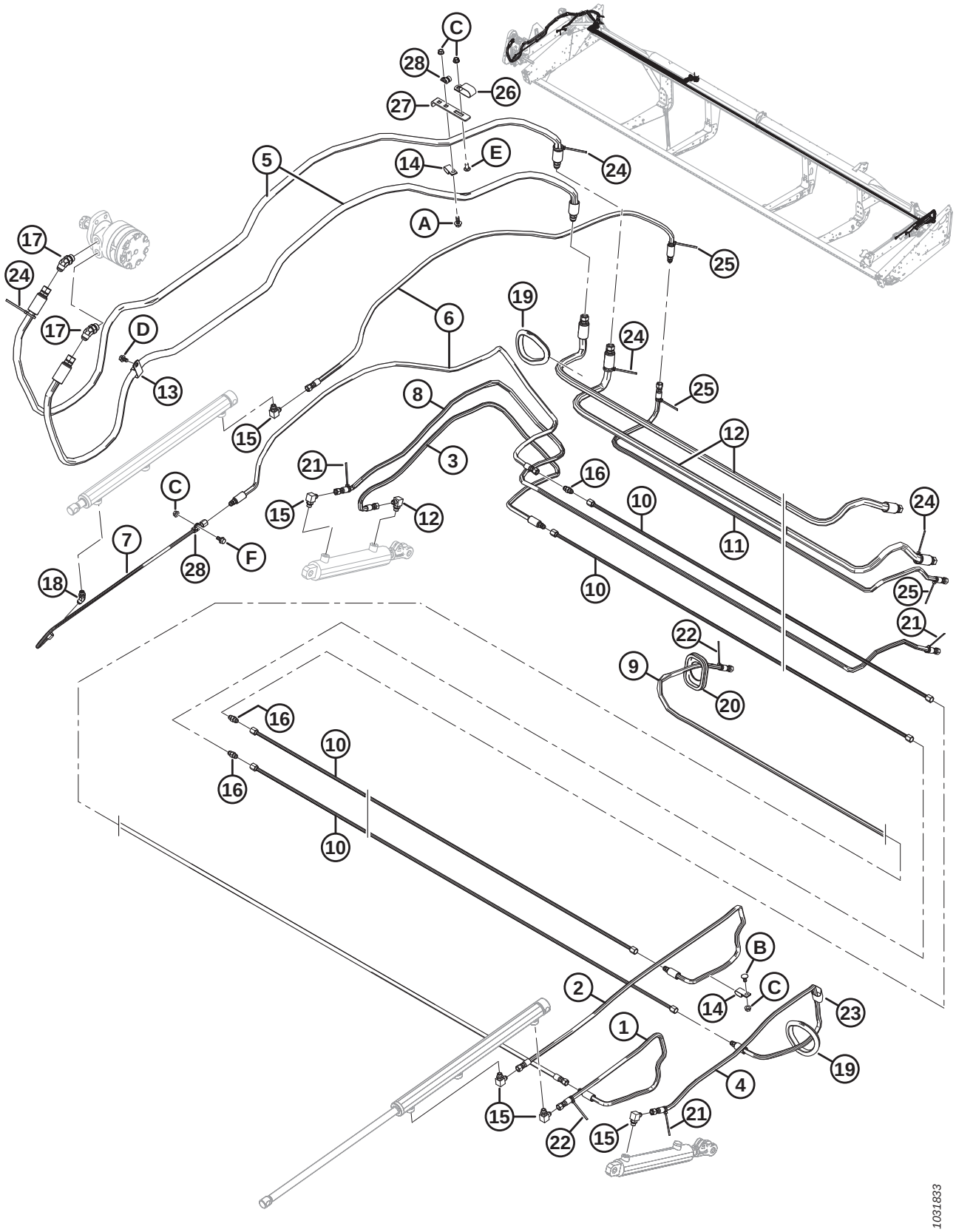

Ref	Part Number	Description	Qty	Serial Number
1	106708	HOSE – HYD, 0.25 IN ID, 970 MM LG	1	
2	132911	HOSE – HYD, 0.25 IN ID, 1700 MM LG	1	
3	220849	HOSE – HYD, 0.25 IN ID, 1480 MM LG	1	
4	220676	HOSE – HYD, 0.25 IN ID, 1300 MM LG	1	
5	172978	HOSE – HYD, 0.5 IN ID, 3000 MM LG	2	
6	165267	HOSE – HYD, 0.25 IN ID, 1830 MM LG	2	
7	253815	LINE – HYD, 3/8 IN DIA, BENT	1	
8	172220	HOSE – HYD, 0.25 IN ID, 2564 MM LG (20 FT ONLY)	1	
	172221	HOSE – HYD, 0.25 IN ID, 3326 MM LG (25 FT ONLY)	1	
	172222	HOSE – HYD, 0.25 IN ID, 4088 MM LG (30 FT ONLY)	1	
	172223	HOSE – HYD, 0.25 IN ID, 4850 MM LG (35 FT ONLY)	1	
9	172184	HOSE – HYD, 0.25 IN ID, 5261 MM LG (20 FT ONLY)	1	
	172183	HOSE – HYD, 0.25 IN ID, 6023 MM LG (25 FT ONLY)	1	
	172185	HOSE – HYD, 0.25 IN ID, 6785 MM LG (30 FT ONLY)	1	
	172186	HOSE – HYD, 0.25 IN ID, 7547 MM LG (35 FT ONLY)	1	
10	123663	LINE – HYD, 3/8 IN DIA, 5480 MM LG (20 FT ONLY)	2	
	123676	LINE – HYD, 3/8 IN DIA, 3500 MM LG (25 FT ONLY)	4	
	123702	LINE – HYD, 3/8 IN DIA, 4243 MM LG (30 FT ONLY)	4	
	123701	LINE – HYD, 3/8 IN DIA, 5005 MM LG (35 FT ONLY)	4	
11	172986	HOSE – HYD, 0.25 IN ID, 1913 MM LG (25 FT ONLY)	1	
	120552	HOSE – HYD, 0.25 IN ID, 2675 MM LG (30 FT ONLY)	1	
	172988	HOSE – HYD, 0.25 IN ID, 3437 MM LG (35 FT ONLY)	1	
12	172981	HOSE – HYD, 0.5 IN ID, 1900 MM LG (25 FT ONLY)	2	
	172982	HOSE – HYD, 0.5 IN ID, 2662 MM LG (30 FT ONLY)	2	
	172983	HOSE – HYD, 0.5 IN ID, 3424 MM LG (35 FT ONLY)	2	
13	103738	CLAMP – PVC INSULATED 13/16 IN. TUBE SIZE	1	
14	135234	CLAMP – DOUBLE HOSE INSULATED	2	
15	30282	FITTING – ELBOW 90° HYD	5	
16	30375	FITTING – UNION HYD	3	
17	50103	FITTING – ELBOW 45° HYD C/W O-RING	2	
18	30284	FITTING – ELBOW 45° HYD C/W O-RING	1	
19	125722	GROMMET – RUBBER	2	
20	172877	GROMMET – 2.38 IN. I.D. (20 FT ONLY)	1	
	172993	GROMMET (25-35 FT ONLY)	1	
21	21763	FASTENER – CABLE TIE, BLACK	3	
22	49227	FASTENER – CABLE TIE, GREEN	2	
23	135443	FASTENER – CINCH STRAP 4 IN. LG	2	
24	40701	FASTENER – CABLE TIE, YELLOW (25-35 FT ONLY)	4	
25	40702	FASTENER – CABLE TIE, RED (25-35 FT ONLY)	3	
26	50022	CLAMP – INSULATED 15/16 INCH	1	
27	294607	BRACKET – HOSES	1	
28	136410	CLAMP – INSULATED 3/8 IN.	2	

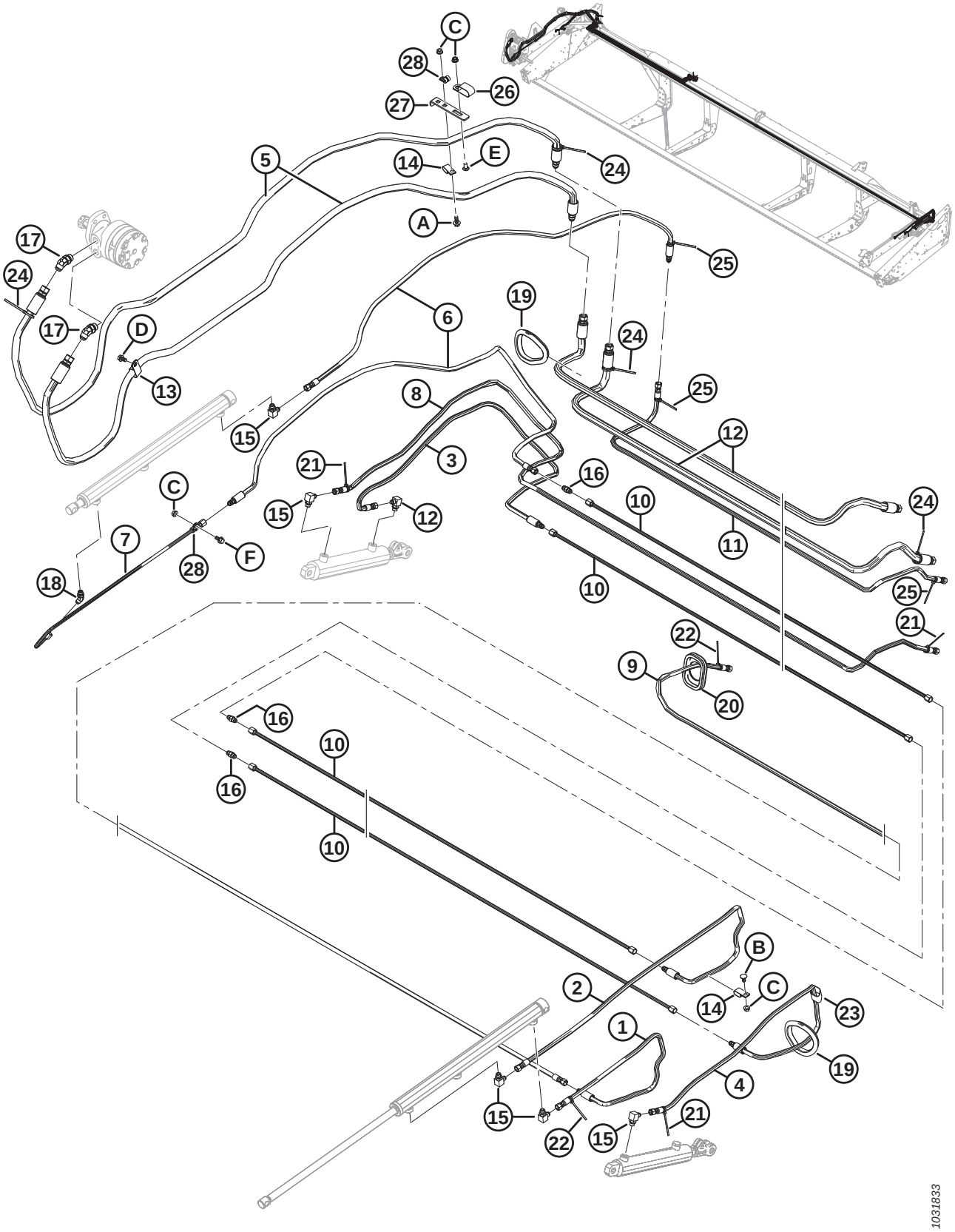
C
28
26
27
5
14
E
24
A
17
24
25
19
6
17
D
24
13
8
25
15
12
21
3
16
C
10
15
12
24
7
11
28
F
18
10
25
21
22
9
20
16
10
16
10
B
2
14
C
23
1
19
4
15
21
22
15
1031833

Ref	Part Number	Description	Qty	Serial Number
A	21447	BOLT – HH LG FLG (SER FACE) 3/8 NC X 1.0 GR 5 ZP		
B	21472	BOLT – RHSN 3/8 NC X 0.75 GR 5 ZP		
C	30228	NUT – FLANGE DT SMOOTH FACE 0.375-16 UNC		
D	101898	SCREW – HEX WASH HD THD ROLLING 3/8 NC X 5/8		
E	21863	BOLT – RHSSN 3/8 NC X 0.75 LG GR 5 ZP		
F	21821	BOLT – HEX FLG SER HD 3/8-16 X 0.75 GR5-AA1J		

35 Reel Drive Hydraulics – Lift and Fore-Aft – Double Reel (D130, D135, D140, and D145)

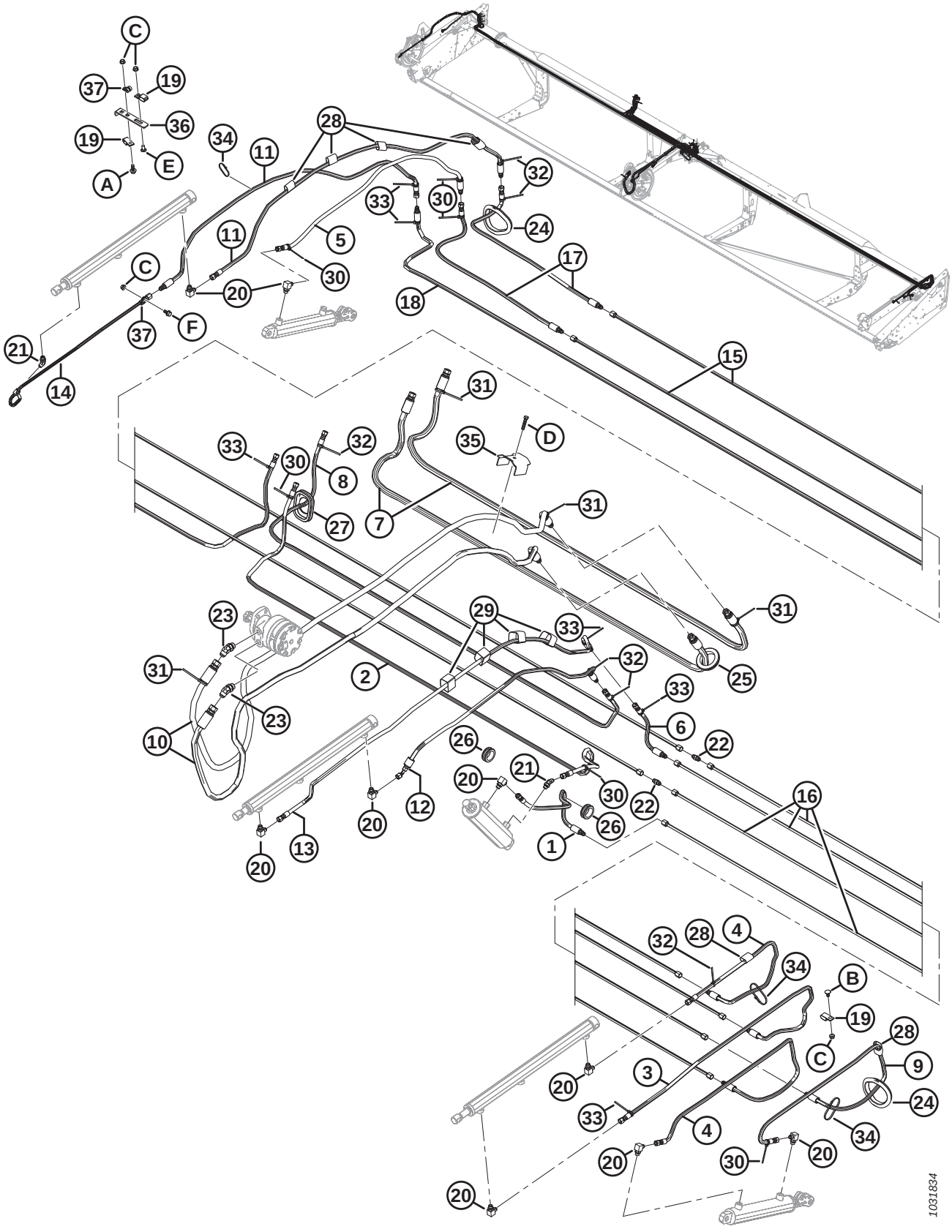

Ref	Part Number	Description	Qty	Serial Number
1	36849	HOSE – HYD, 0.25 IN. ID, 780 MM LG	1	
2	120552	HOSE – HYD, 0.25 IN. ID, 2675 MM LG	1	
3	132911	HOSE – HYD, 0.25 IN. ID, 1700 MM LG	1	
4	132912	HOSE – HYD, 0.25 IN. ID, 1270 MM LG	2	
5	220676	HOSE – HYD, 0.25 IN. ID, 1300 MM LG	1	
6	172897	HOSE – HYD, 0.25 IN. ID, 300 MM LG	1	
7	174407	HOSE – HYD, 0.5 IN. ID, 2150 MM LG	2	
8	174408	HOSE – HYD, 0.25 IN. ID, 2150 MM LG	1	
9	220849	HOSE – HYD, 0.25 IN. ID, 1480 MM LG	1	
10	172978	HOSE – HYD, 0.5 IN ID, 3000 MM LG	2	
11	165267	HOSE – HYD, 0.25 IN ID, 1830 MM LG	2	
12	172985	HOSE – HYD, 0.25 IN ID, 2017 MM LG	1	
13	120996	HOSE – HYD, 0.25 IN ID, 2200 MM LG	1	
14	253815	LINE – HYD, 3/8 IN DIA, BENT	1	
15	123702	LINE – HYD, 3/8 IN DIA, 4243 MM LG (30 FT ONLY)	2	
	123701	LINE – HYD, 3/8 IN DIA, 5005 MM LG (35 FT ONLY)	2	
	113881	LINE – HYD, 3/8 IN DIA, 5230 MM LG (40 FT ONLY)	2	
	220675	LINE – HYD, 3/8 IN DIA, 4470 MM LG (45 FT ONLY)	2	
16	123702	LINE – HYD, 3/8 IN DIA, 4243 MM LG (30 FT ONLY)	4	
	123701	LINE – HYD, 3/8 IN DIA, 5005 MM LG (35 FT ONLY)	4	
	123598	LINE – HYD, 3/8 IN DIA, 5767 MM LG (40 FT ONLY)	4	
	123703	LINE – HYD, 3/8 IN DIA, 6529 MM LG (45 FT ONLY)	4	
17	172175	HOSE – HYD, 0.25 IN. ID, 733 MM LG (40 FT ONLY)	2	
	172146	HOSE – HYD, 0.25 IN. ID, 2250 MM LG (45 FT ONLY)	2	
18	123620	HOSE – HYD, 0.25 IN. ID, 4438 MM LG (40 FT ONLY)	1	
	123673	HOSE – HYD, 0.25 IN. ID, 5200 MM LG (45 FT ONLY)	1	
19	135234	CLAMP – DOUBLE HOSE INSULATED	3	
20	30282	FITTING – ELBOW 90° HYD	9	
21	30284	FITTING – ELBOW 45° HYD C/W O-RING	2	
22	30375	FITTING – UNION HYD	2	
23	50103	FITTING – ELBOW 45° HYD C/W O-RING	2	
24	125722	GROMMET – RUBBER 99 MM ID	2	
25	172877	GROMMET – 2.38 IN. I.D.	1	
26	174149	GROMMET – 1.50 IN. I.D.	2	
27	172993	GROMMET	1	
28	135443	FASTENER – CINCH STRAP 4 IN. LG	6	
29	135444	FASTENER – CINCH STRAP 6 IN. LG	4	
30	21763	FASTENER – CABLE TIE, BLACK [157]		
31	40701	FASTENER – CABLE TIE, YELLOW	4	
32	40702	FASTENER – CABLE TIE, RED [158]		

157. Quantities: 30–35 foot = 6, 40-45 foot = 8.
158. Quantities: 30–35 foot = 5, 40–45 foot = 6.

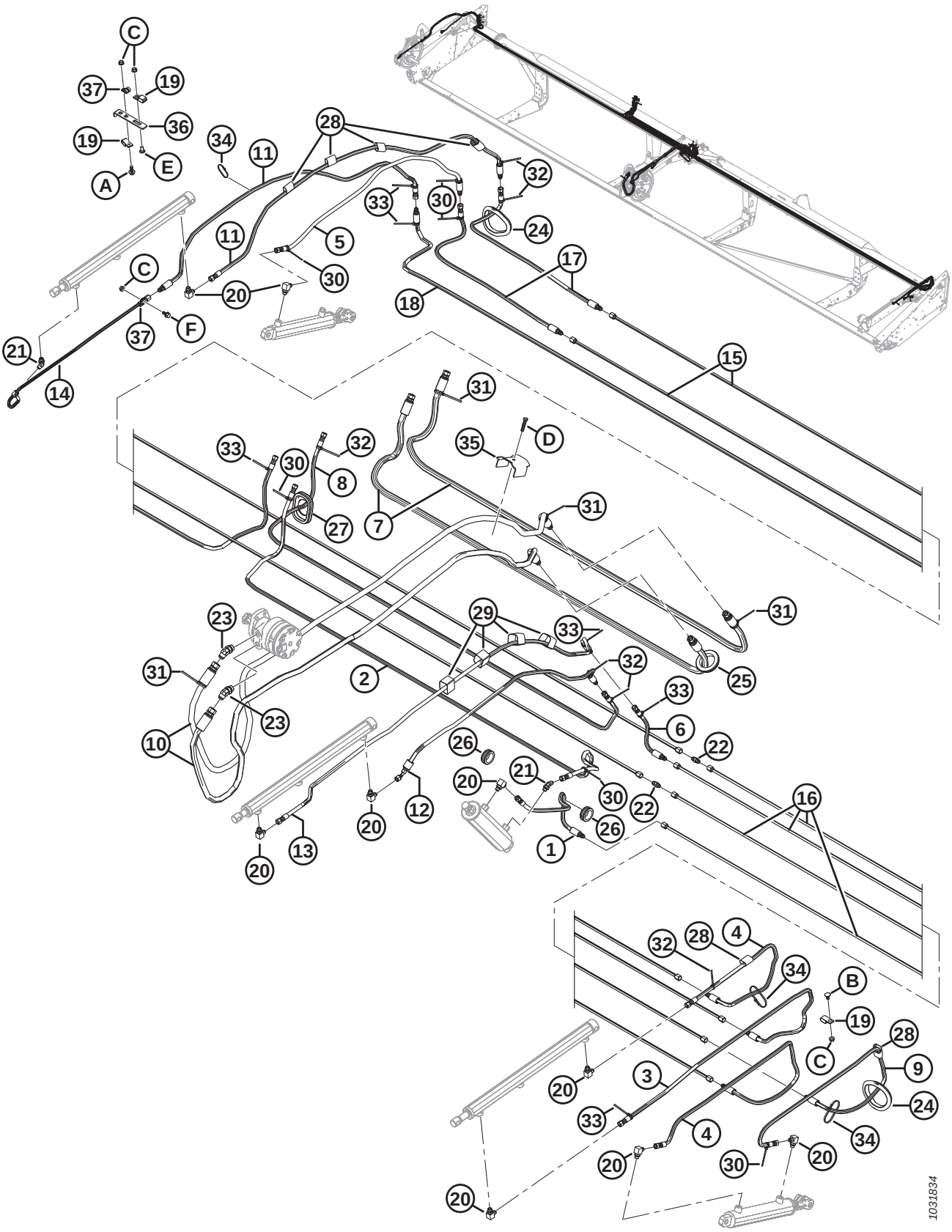
1031834

Ref	Part Number	Description	Qty	Serial Number
33	49227	FASTENER – CABLE TIE, GREEN [159]		
34	30753	FASTENER – CABLE TIE, 305 MM LG	6	
35	123599	HOLDER – CENTER REEL ARM HYD HOSE	1	
36	294607	BRACKET – HOSES	1	
37	136410	CLAMP – INSULATED 3/8 IN.	2	
A	21447	BOLT – HH LG FLG (SER FACE) 3/8 NC X 1.0 GR 5 ZP		
B	21472	BOLT – RHSN 3/8 NC X 0.75 GR 5 ZP		
C	30228	NUT – FLANGE DT SMOOTH FACE 0.375-16 UNC		
D	20078	BOLT – HH 3/8 NC X 1.75 LG GR 5 ZP		
E	21863	BOLT – RHSSN 3/8 NC X 0.75 LG GR 5 ZP		
F	21821	BOLT – HEX FLG SER HD 3/8-16 X 0.75 GR5-AA1J		

159. Quantities: 30–35 foot = 4, 40–45 foot = 6.

36 Electrical Components

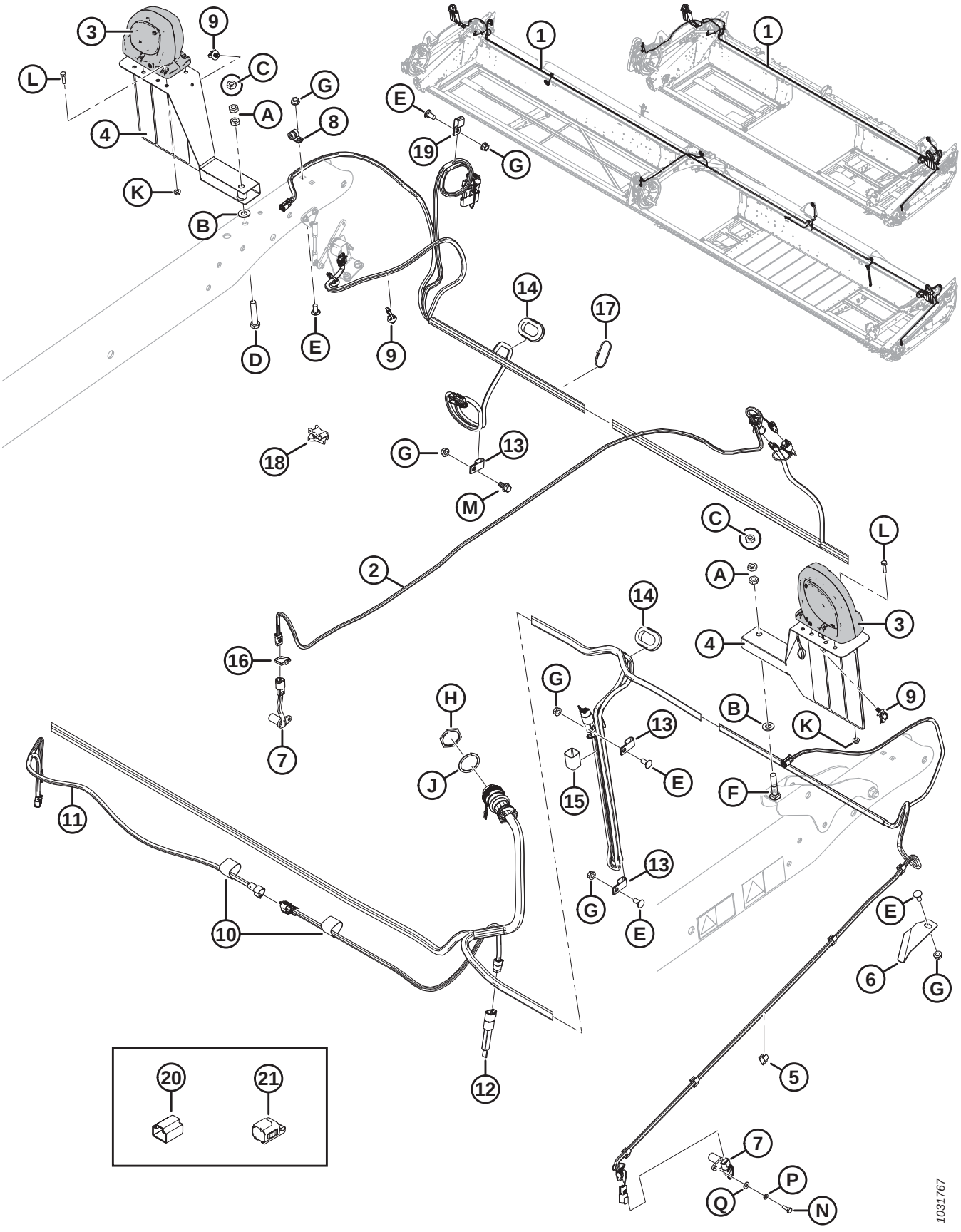

NOTE:

For specific electrical harness parts, refer to Electrical Connector Parts Catalog (MD #169641).

Ref	Part Number	Description	Qty	Serial Number
1	304390	HARNESS – MAIN, D120	1	
	304391	HARNESS – MAIN, D125	1	
	304392	HARNESS – MAIN, D130	1	
	304393	HARNESS – MAIN, D135	1	
	304394	HARNESS – MAIN, D140	1	
	304395	HARNESS – MAIN, D145	1	
2	255426	HARNESS – REEL EXT., D100	1	
3	203547	LAMP – CLEARANCE, DT CONNECTOR	2	
	139630	LENS – AMBER		
4	294874	ASSY – BRACKET W/ REFLECTORS (2018–LATER) [160]	2	321190–
	125343	BRACKET – HEADER LIGHT (2017–PRIOR)	2	–321189
5	21218	CLIP – WIRING	5	
6	172142	HOLDER – WIRING HARNESS	1	
7	143875	SENDER – SPEED	2	
8	136410	CLAMP – INSULATED 3/8 IN.	1	
9	136655	FASTENER – FIR TREE MT W/ TIE	4	
10	135443	FASTENER – CINCH STRAP 4 IN. LG	1	
11	255344	HARNESS – HDS, D100 (SR/DR 25-40 FT)	1	
12	254219	PLUG – HEADER ID, 20/25 FT, SK	1	
	254220	PLUG – HEADER ID, 20/25 FT, DK	1	
	254179	PLUG – HEADER ID, 30 FT, (SR/DR 30 FT ONLY)	1	
	254180	PLUG – HEADER ID, 35 FT, (SR/DR 35 FT ONLY)	1	
	254181	PLUG – HEADER ID, 40/45 FT, (DR 40-45 FT)	1	
13	135233	CLAMP – DOUBLE HOSE INSULATED (SR/DR 30-45 FT)	3	
14	172899	GROMMET – 1.75 IN. ID (SR/DR 30-45 FT)	2	
15	135444	FASTENER – CINCH STRAP 6 IN. LG (SR/DR 30-45 FT)	1	
16	21763	FASTENER – CABLE TIE, BLACK, 160 MM LG [161]	1	
17	30753	FASTENER – CABLE TIE, BLACK, 305 MM LG	3	
18	134443	SPACER – DUAL SADDLE, H.T. TYPE DSWS5 (SR/DR 25-45 FT) [162]		
19	135234	CLAMP – DOUBLE HOSE INSULATED (SR/DR 30-45 FT)	1	
20	134954	DUST CAP – PLUG, 3 POS, DTM [163]	A/R	
21	134741	CAP – PLUG, DEUTSCH, DT, 2 POS [164]	A/R	

160. Includes reflectors (MD #115145, 115146, and 115147).
161. Quantities: 25 foot = 2, 30–35 foot = 3, 45 foot = 2.
162. Quantities: 30 foot single reel and 40–45 foot double reel = 1, 25 foot single reel and 35 foot single/double reel = 2.
163. Cap required to cover socket when reel speed sensor is not installed.
164. Caps required to cover LH and RH light socket pins (P521 and P520) when exposed due to lights not being installed as per export configuration.

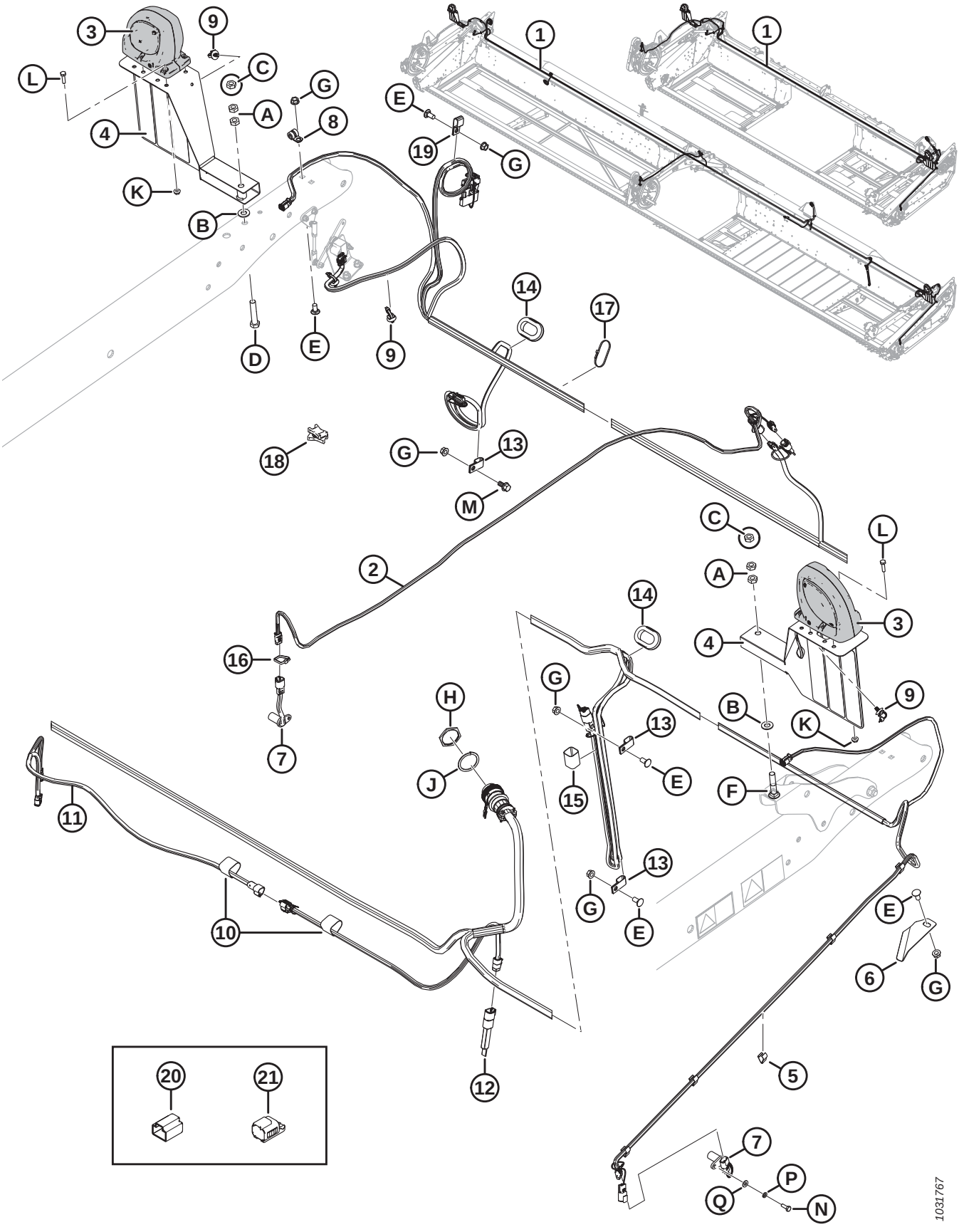
1
1
2
3
4
5
6
7
8
9
10
11
12
13
14
15
16
17
18
19
20
21
A
B
C
D
E
F
G
H
J
K
L
M
N
P
Q
1031767

Ref	Part Number	Description	Qty	Serial Number
A	137727	NUT – HEX JAM DT 1/2-13 UNC GR 5 AA1J (2018–LATER)		321190–
	18591	NUT – HEX 1/2-13 UNC GR 5 ZP (2017–PRIOR)		–321189
B	18599	WASHER – SAE FLAT 17/32 ID X 1 1/16 IN OD ZP		
C	21056	NUT – HEX JAM 1/2-13 UNC GR 5 ZP (2017–PRIOR)		–321189
D	21760	BOLT – HEX HD 1/2-13 X 2.5 GR 5 AA1J (2018–LATER)		321190–
	21576	BOLT – HH 1/2 NC X 2.0 LG GR 5 ZP (2017–PRIOR)		–321189
E	21863	BOLT – RHSSN 3/8 NC X 0.75 LG GR 5 ZP		
F	21489	BOLT – RHSN 1/2 NC X 2.5 LG GR 5 AA1J (2018–LATER)		321190–
	30027	BOLT – RHSN 1/2 NC X 2.25 LG GR 5 ZP (2017–PRIOR)		–321189
G	30228	NUT – FLANGE DT SMOOTH FACE 0.375-16 UNC		
H	134010	NUT – PANEL, HD30, SIZE 24		
J	134011	WASHER – LOCK SPRING, DEUTSCH HD, SIZE 24		
K	21455	NUT – FLG (SER FACE) 1/4 NC GR 5 ZP		
L	21573	BOLT – HEX HD 1/4 NC X 1.0 LG GR 5 ZP		
M	21821	BOLT – HH FLG (SER FACE) 3/8 NC X 0.75 GR 5 ZP		
N	109089	BOLT – HH 1/4 NF X 0.75 GR 5 ZP		
P	18635	WASHER – REG. LOCK 1/4 IN. NOM. ID ZP		
Q	18596	WASHER – SAE FLAT 9/32 ID X 5/8 IN OD ZP		

37 Reel Height Sensor

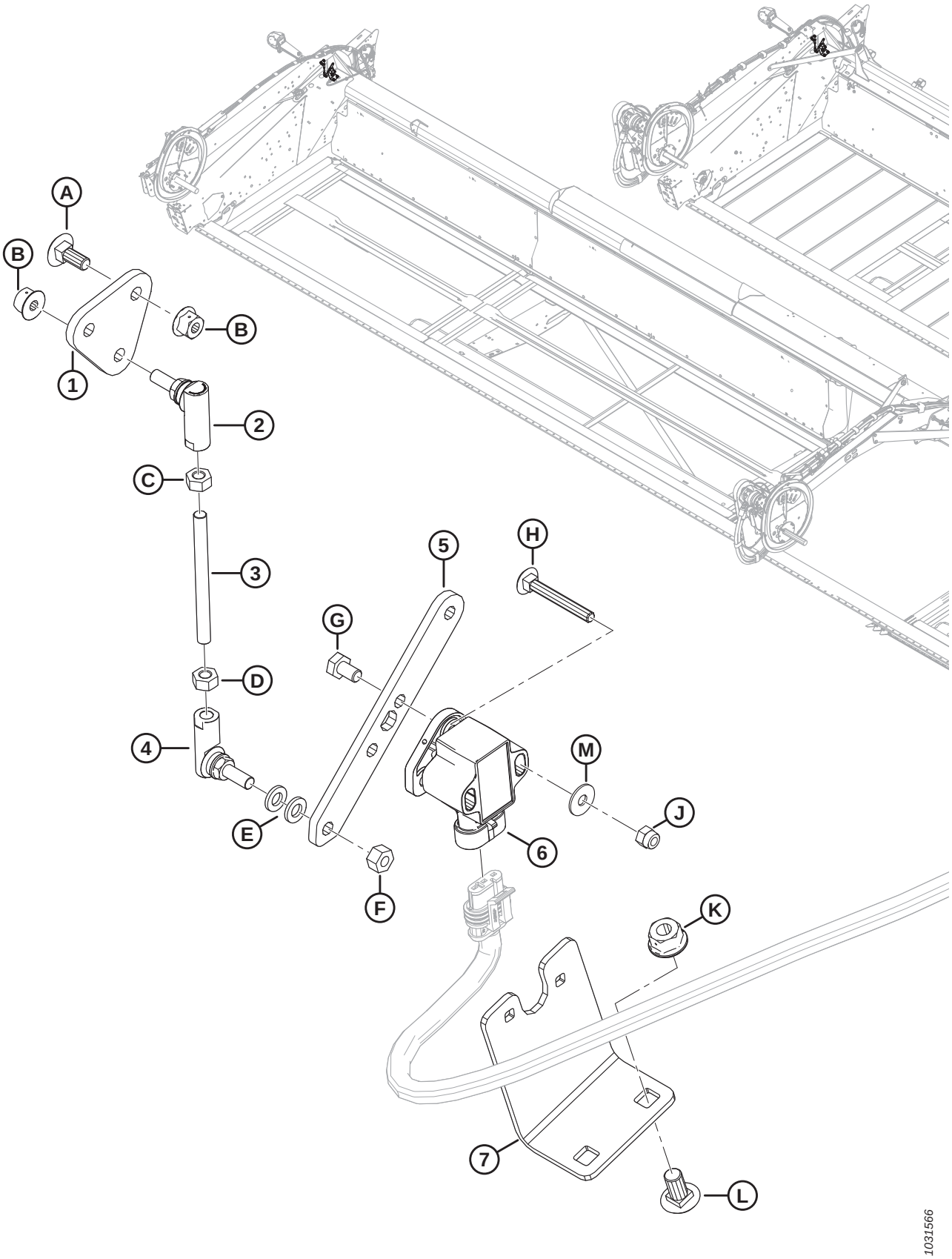

REEL HEIGHT SENSOR

Ref	Part Number	Description	Qty	Serial Number
1	254096	PLATE – BALL JOINT MOUNTING	1	
2	291485	BALL JOINT – LH THREAD	1	
3	232650	ROD – THREADED	1	
4	291484	BALL JOINT – RH THREAD	1	
5	254095	ARM – FLOAT SENSOR	1	
6	248643	ROTARY SENSOR – DUAL OUTPUT	1	
7	254089	BRACKET – SENSOR MOUNTING	1	
A	136748	BOLT – RHSN M6 X 1 X 16-8.8-A2L		
B	152668	NUT – HEX FLG CTR LOC M6 X 1-8-A2L		
C	136613	NUT – HEX LH ISO 4032 M6 X 1-8-AA2L		
D	184683	NUT – HEX ISO 4032 M6 X 1-8-A2L		
E	184705	WASHER – FLAT M6-200HV-A2L		
F	136773	NUT – HEX CTR LOC M6 X 1-8-AA3L		
G	136561	BOLT – HEX HD TFL M6 X 1 X 10-8.8-A3L		
H	136604	BOLT – RHSN TFL M5 X 0.8 X 40-8.8-AA2L		
J	197230	NUT – HEX NYLOC M5 X 0.8-8-A2L		
K	135337	NUT – HEX FLG CTR LOC M8 X 1.25-8-A2L		
L	191489	BOLT – RHSSN TFL M8 X 1.25 X 16-8.8-A2L		
M	184701	WASHER – FLAT LARGE M5-200HV		

38 Skid Shoes – End and Center

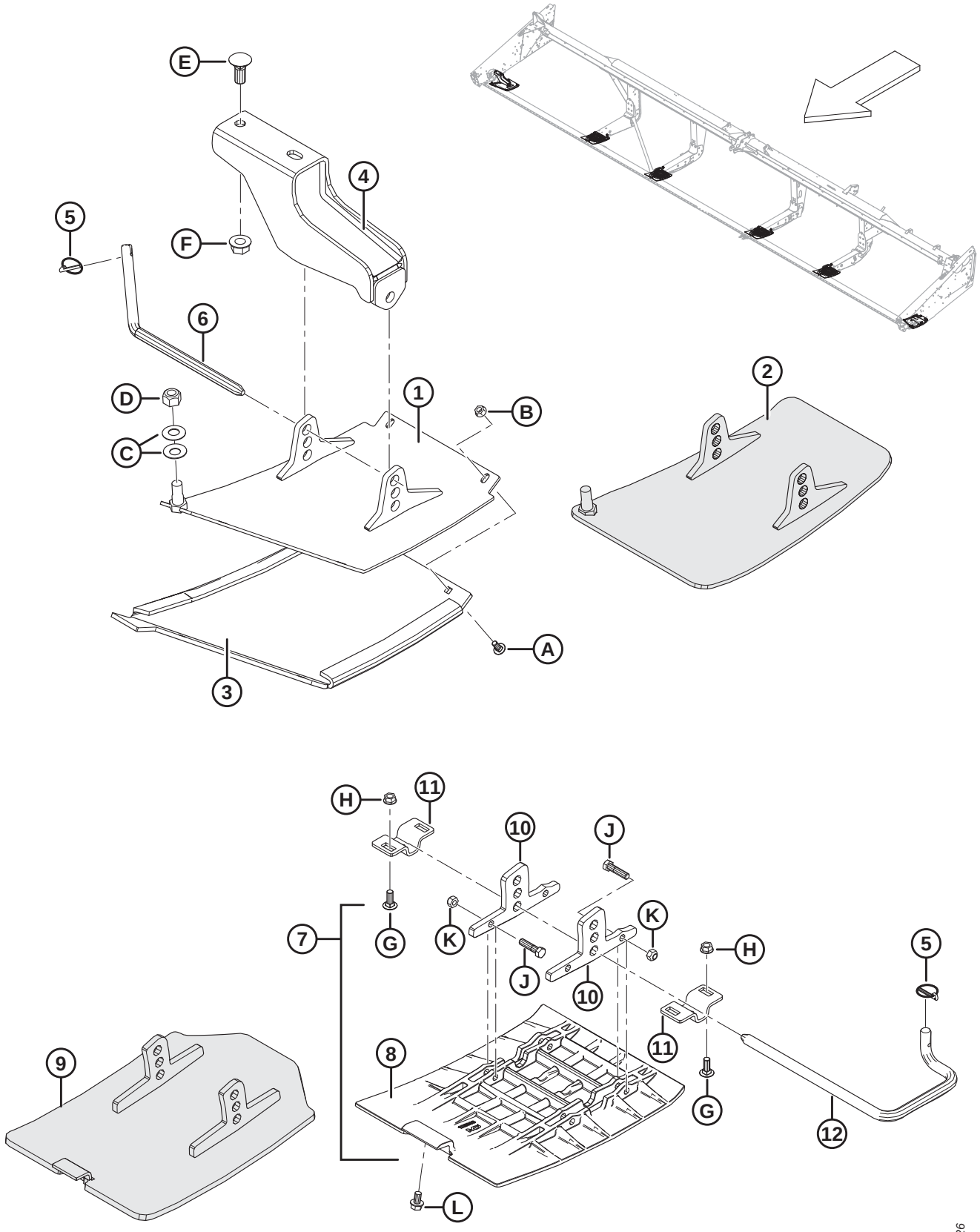

SKID SHOES – END AND CENTER

Ref	Part Number	Description	Qty	Serial Number
	B4963	KIT – OUTBOARD SKID SHOES (POLYETHYLENE) [165]	1	
	B5615	KIT – INBOARD SKID SHOES (POLYETHYLENE) [165]	2	
	B9053	KIT – SKID SHOES (STEEL) [165]	1	
1	172133	SHOE – LH, WELDT (POLYETHYLENE ONLY)	1	
	172134	SHOE – RH, WELDT (POLYETHYLENE ONLY)	1	
2	313875	SHOE – LH, WELDT (STEEL ONLY)	1	
	313873	SHOE – RH, WELDT (STEEL ONLY)	1	
3	165188	SHOE – LH PLASTIC WEAR (POLYETHYLENE ONLY)	1	
	165386	SHOE – RH PLASTIC WEAR (POLYETHYLENE ONLY)	1	
4	165727	SUPPORT – OUTER SHOE WELDT	2	
5	50193	PIN – LYNCH	6	
6	165722	ROD – ENGAGING	2	
7	245396	KIT – SHOE CENTER [166]	4	
	245397	KIT – SHOE CENTER HARDWARE [167]	A/R	
8	125393	SHOE – CENTER (POLYETHYLENE ONLY)	4	
9	335608	SHOE – WELDT, CENTER (STEEL ONLY)	4	
10	NSS	LUG (POLYETHYLENE ONLY) [168]	8	
11	165429	BRACKET – SHOE SUPPORT	8	
12	165168	ROD – ENGAGING LH	4	
	165588	ROD – ENGAGING RH	4	
A	21281	BOLT – RHSN 5/16 NC X 0.75 GR 5 ZP		
B	21403	NUT – FLG (SER FACE) 5/16 NC GR 5 ZP		
C	135448	WASHER – BELLEVILLE		
D	18666	NUT – HEX LOCK DT 5/8-11 UNC ZP		
E	18523	BOLT – RHSN 5/8 NC X 1.5 GR 5 ZP		
F	50225	NUT – FLANGE DT SMOOTH FACE .625-11 UNC		
G	19965	BOLT – RHSN 3/8 NC X 1.0 GR 5 ZP		
H	30228	NUT – FLANGE DT SMOOTH FACE 0.375-16 UNC		
J	21561	BOLT – HH 3/8 NC X 1.5 LG GR 5 ZP		
K	18669	NUT – HEX LOCK DT 3/8-16 UNC ZP		
L	101898	SCREW – HEX WASH HD THD ROLLING 3/8 NC X 5/8		

165. Kits available through Whole Goods only.
166. Includes shoe (MD #125393), two lugs (not sold separately), and hardware (MD #21561, 18669).
167. Includes two lugs (not sold separately), and hardware (MD #21561, 18669).
168. Not sold separately; to service this part, order shoe center hardware kit (MD #245397).

39 Decals and Reflectors

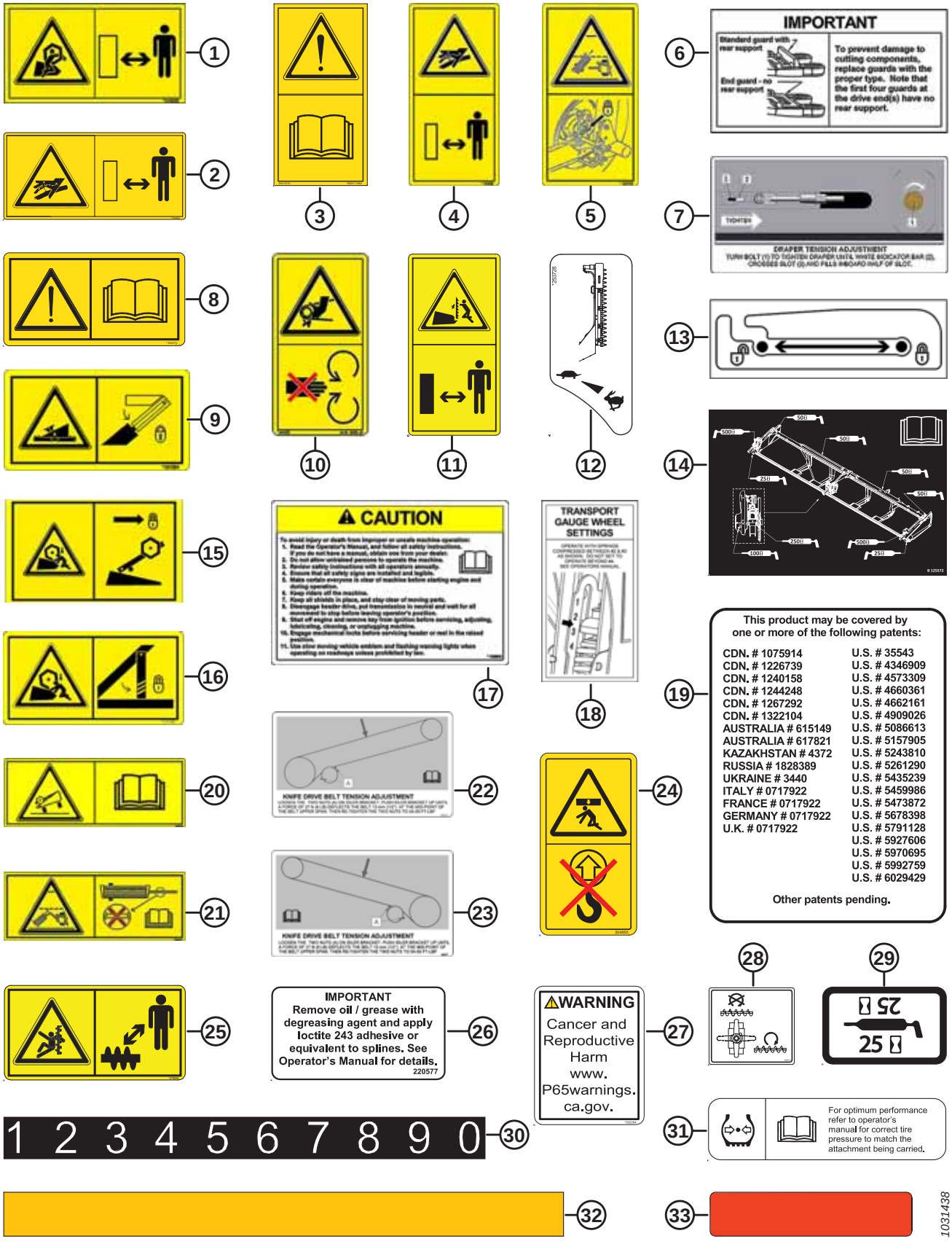

Ref	Part Number	Description	Qty	Serial Number
1	174632	DECAL – REEL ENTANGLEMENT		
2	166466	DECAL – HIGH PRESSURE FLUID		
3	113482	DECAL – GENERAL HAZARD		
4	174436	DECAL – HIGH PRESSURE FLUID		
5	220799	DECAL – TRANSPORT HITCH PIN, 2 PANEL		
6	129313	DECAL – IMPORTANT: GUARDS [169]		
7	220084	DECAL – DRAPER TENSION, LH		
	279528	DECAL – DRAPER TENSION, RH		
8	184372	DECAL – READ MANUAL		
9	131391	DECAL – HEADER HAZARD		
10	184422	DECAL – PINCH POINT EU		
11	174684	DECAL – VERTICAL KNIFE		
12	253728	DECAL – VERTICAL KNIFE HYD		
13	220236	DECAL – REEL PROP LOCK		
14	125572	DECAL – GREASE, DK		
	125571	DECAL – GREASE, SK		
	220673	DECAL – GREASE, UDK		
15	131392	DECAL – REEL HAZARD		
16	131393	DECAL – REEL HAZARD		
17	109843	DECAL – GENERAL CAUTION PIN, 2 PANEL		
18	193034	DECAL – TRANSPORT GAUGE WHEEL SETTING		
19	32070	DECAL – PATENT NUMBER		
20	220797	DECAL – WARNING		
21	220798	DECAL – WARNING		
22	245476	DECAL – KNIFE DRIVE BELT TENSION (LH)		
23	245477	DECAL – KNIFE DRIVE BELT TENSION (RH)		
24	304865	DECAL – NO LIFT		
25	279085	DECAL – WARNING, AUGER		
26	220577	DECAL – IMPORTANT		
27	302204	DECAL – CA PROPOSITION 65		
28	294813	DECAL – UPPER CROSS AUGER VALVE		
29	23164	DECAL – 25 HR LUBE		
	23165	DECAL – 50 HR LUBE		
30	158217	DECAL – REEL POSITION		
31	111221	DECAL – TIRE PRESSURE		
32	132852	REFLECTOR – AMBER, 638 MM LG [170]		

169. Drive-end guards vary depending on the type of guards used on the header. Refer to Section *3 Guards, Hold-Downs, and Wearplates – Single Knife, Stub Guards, page 7* through Section *6 Guards, Hold-Downs, and Wearplates – Double Knife, Middle and Left End, page 17* for drive-end guard types and quantities.

170. For use on reel center tube.

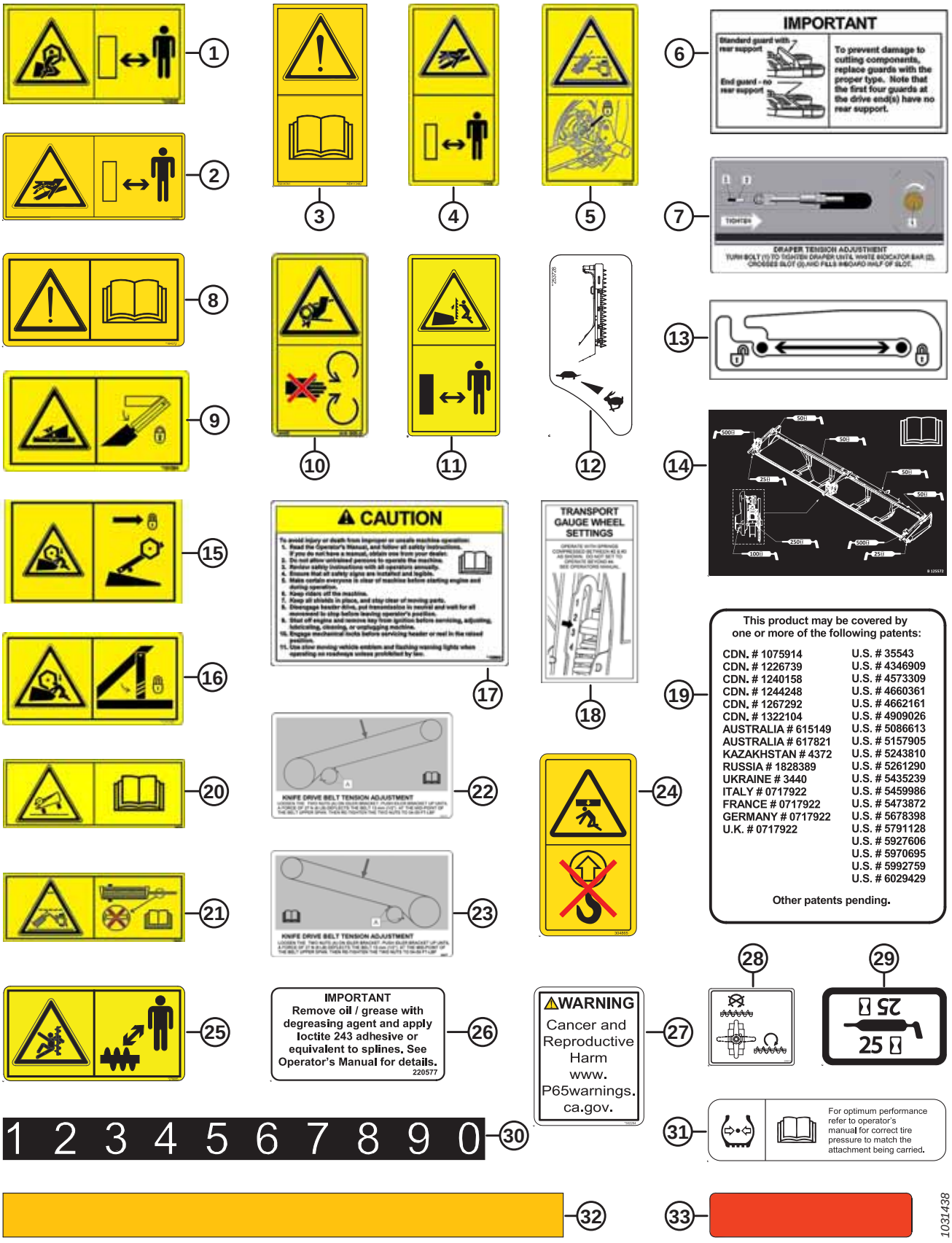
1
2
3
4
5
6
IMPORTANT
Standard guard with rear support
End guard - no rear support
To prevent damage to cutting components, replace guards with the proper type. Note that the first four guards at the drive end(s) have no rear support.
7
TIGHTEN
DRAPER TENSION ADJUSTMENT
8
9
10
11
12
13
14
15
CAUTION
17
TRANSPORT GAUGE WHEEL SETTINGS
18
This product may be covered by one or more of the following patents:
CDN. # 1075914
CDN. # 1226739
CDN. # 1240158
CDN. # 1244248
CDN. # 1267292
CDN. # 1322104
AUSTRALIA # 615149
AUSTRALIA # 617821
KAZAKHSTAN # 4372
RUSSIA # 1828389
UKRAINE # 3440
ITALY # 0717922
FRANCE # 0717922
GERMANY # 0717922
U.K. # 0717922
U.S. # 35543
U.S. # 4346909
U.S. # 4573309
U.S. # 4660361
U.S. # 4662161
U.S. # 4909026
U.S. # 5086613
U.S. # 5157905
U.S. # 5243810
U.S. # 5261290
U.S. # 5435239
U.S. # 5459986
U.S. # 5473872
U.S. # 5678398
U.S. # 5791128
U.S. # 5927606
U.S. # 5970695
U.S. # 5992759
U.S. # 6029429
Other patents pending.
19
20
21
22
KNIFE DRIVE BELT TENSION ADJUSTMENT
23
KNIFE DRIVE BELT TENSION ADJUSTMENT
24
25
IMPORTANT
Remove oil / grease with degreasing agent and apply loctite 243 adhesive or equivalent to splines. See Operator's Manual for details.
220577
26
WARNING
Cancer and Reproductive Harm
www.
P65warnings.
ca.gov.
27
28
29
25
25
1 2 3 4 5 6 7 8 9 0
30
31
For optimum performance refer to operator's manual for correct tire pressure to match the attachment being carried.
32
33
1031438

Ref	Part Number	Description	Qty	Serial Number
33	115145	REFLECTOR – FLUOR. RED-ORANGE, 230 MM [171]		
	115146	REFLECTOR – AMBER, 230 MM [171]		
	115147	REFLECTOR – RED, 230 MM [171]		
	165524	REFLECTOR – RED, 230 MM [172]		
	172948	REFLECTOR – DOUBLE RED AND RED-ORANGE		
	172951	REFLECTOR – DOUBLE RED AND RED-ORANGE [173]		
	132852	REFLECTOR – AMBER		
	165973	REFLECTOR – AMBER [173]		

171. Reflector with square corners. For use on metal surfaces.
172. Reflector with round corners. For use on plastic surfaces.
173. 35 ft. only.

40 Decals – Product Identification

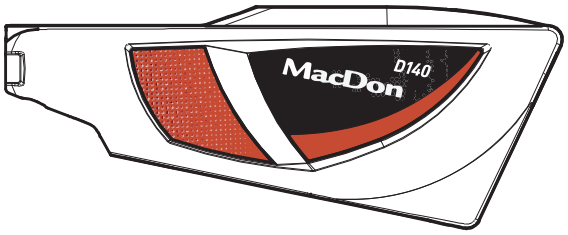

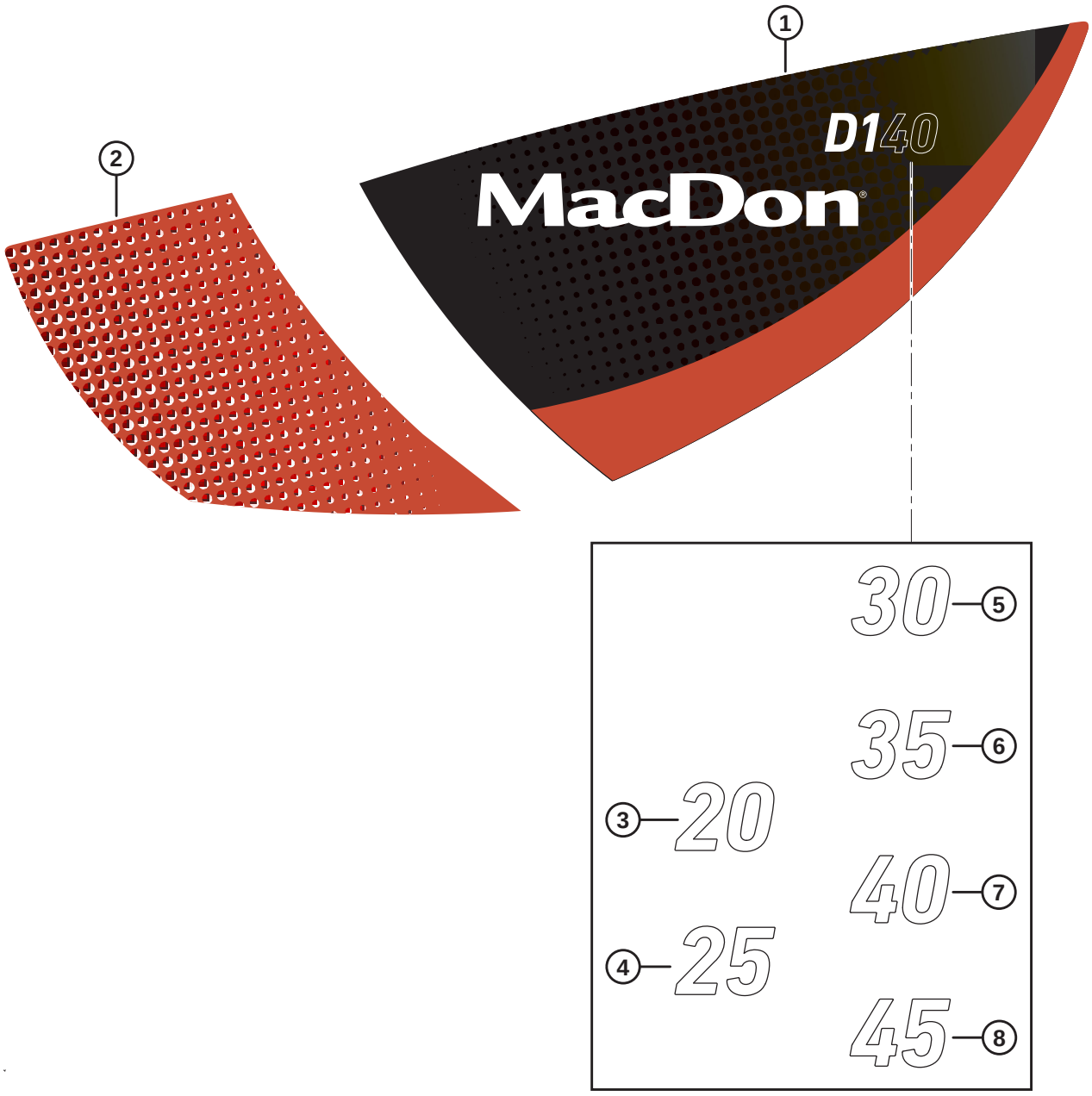

1027483

DECALS – PRODUCT IDENTIFICATION

Ref	Part Number	Description	Qty	Serial Number
1	304126	DECAL – D1 LH RED ACCENT		
	304127	DECAL – D1 RH RED ACCENT		
	304124	DECAL – D1 LH GREEN ACCENT		
	304125	DECAL – D1 RH GREEN ACCENT		
	304128	DECAL – D1 LH YELLOW ACCENT		
	304129	DECAL – D1 RH YELLOW ACCENT		
	304130	DECAL – D1 LH GREY ACCENT		
	304131	DECAL – D1 RH GREY ACCENT		
	304132	DECAL – D1 LH LIME ACCENT		
	304133	DECAL – D1 RH LIME ACCENT		
	304134	DECAL – D1 LH BLACK ACCENT		
	304135	DECAL – D1 RH BLACK ACCENT		
2	255014	DECAL – LH FRONT, RED		
	255021	DECAL – RH FRONT, RED		
	255131	DECAL – LH FRONT, GREEN		
	255133	DECAL – RH FRONT, GREEN		
	255259	DECAL – LH FRONT, YELLOW		
	255260	DECAL – RH FRONT, YELLOW		
	255115	DECAL – LH FRONT, GREY		
	255316	DECAL – RH FRONT, GREY		
	255116	DECAL – LH FRONT, LIME		
	255317	DECAL – RH FRONT, LIME		
	255117	DECAL – LH FRONT, BLACK		
	255318	DECAL – RH FRONT, BLACK		
3	304139	DECAL – "20"		
4	304140	DECAL – "25"		
5	304141	DECAL – "30"		
6	304142	DECAL – "35"		
7	304143	DECAL – "40"		
8	304144	DECAL – "45"		

41 Decals – French



1



2



3



4



5

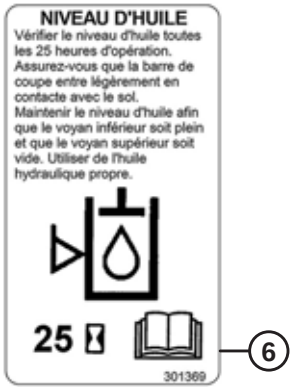

6

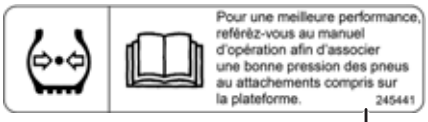

7

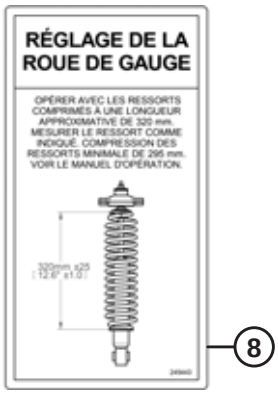

8

1024700

DECALS – FRENCH

Ref	Part Number	Description	Qty	Serial Number
1	245428	DECAL – LH DRAPER TENSION, FRENCH		
2	245432	DECAL – RH DRAPER TENSION, FRENCH		
3	245433	DECAL – IMPORTANT: GUARDS, FRENCH		
4	245438	DECAL – IMPORTANT: OIL OPERATING TEMP, FRENCH		
5	245439	DECAL – ADAPTER OIL DRAIN, FRENCH		
6	301369	DECAL – ADAPTER OIL LEVEL, FRENCH		
7	245441	DECAL – TIRE PRESSURE, FRENCH		
8	245443	DECAL – GAUGE WHEEL SETTING, FRENCH		

42 Decals – Portuguese



1



2



3



4



5



6



7

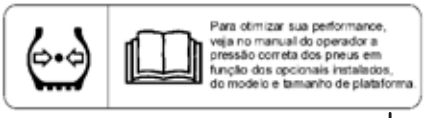

8

1024701

DECALS – PORTUGUESE

Ref	Part Number	Description	Qty	Serial Number
1	220817	DECAL – IMPORTANT: GUARDS, PORTUGUESE		
2	220818	DECAL – IMPORTANT: OIL OPERATING TEMP, PORT		
3	220819	DECAL – ADAPTER OIL DRAIN, PORTUGUESE		
4	301496	DECAL – ADAPTER OIL LEVEL, PORTUGUESE		
5	220823	DECAL – GAUGE WHEEL SETTING, PORTUGUESE		
6	220824	DECAL – LH DRAPER TENSION, PORTUGUESE		
7	220836	DECAL – RH DRAPER TENSION, PORTUGUESE		
8	220885	DECAL – TIRE PRESSURE, PORTUGUESE		

43 Decals – Russian



1



2



3



4



5



6



7



8



9

1024702

DECALS – RUSSIAN

Ref	Part Number	Description	Qty	Serial Number
1	220831	DECAL – LH DRAPER TENSION, RUSSIAN		
2	220832	DECAL – IMPORTANT: GUARDS, RUSSIAN		
3	220833	DECAL – TRANSPORT GAUGE WHEEL SETTING, RUSSIAN		
4	220834	DECAL – RH DRAPER TENSION, RUSSIAN		
5	220863	DECAL – GAUGE WHEEL SETTING, RUSSIAN		
6	220868	DECAL – IMPORTANT: OIL OPERATING TEMP. RUSSIAN		
7	220871	DECAL – ADAPTER OIL DRAIN, RUSSIAN		
8	301497	DECAL – ADAPTER OIL LEVEL, RUSSIAN		
9	166309	DECAL – TIRE PRESSURE, RUSSIAN		

44 Decals – Spanish



1



2



3



4



5



6



7

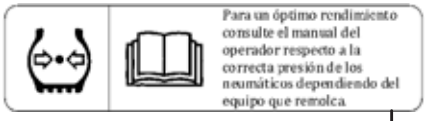

8

1024703

DECALS – SPANISH

Ref	Part Number	Description	Qty	Serial Number
1	220807	DECAL – IMPORTANT: GUARDS, SPANISH		
2	220808	DECAL – IMPORTANT: OIL OPERATING TEMP. SPANISH		
3	220809	DECAL – ADAPTER OIL DRAIN, SPANISH		
4	301495	DECAL – ADAPTER OIL LEVEL, SPANISH		
5	220813	DECAL – GAUGE WHEEL SETTING, SPANISH		
6	220814	DECAL – LH DRAPER TENSION, SPANISH		
7	220835	DECAL – RH DRAPER TENSION, SPANISH		
8	220876	DECAL – TIRE PRESSURE, SPANISH		

45 Paint

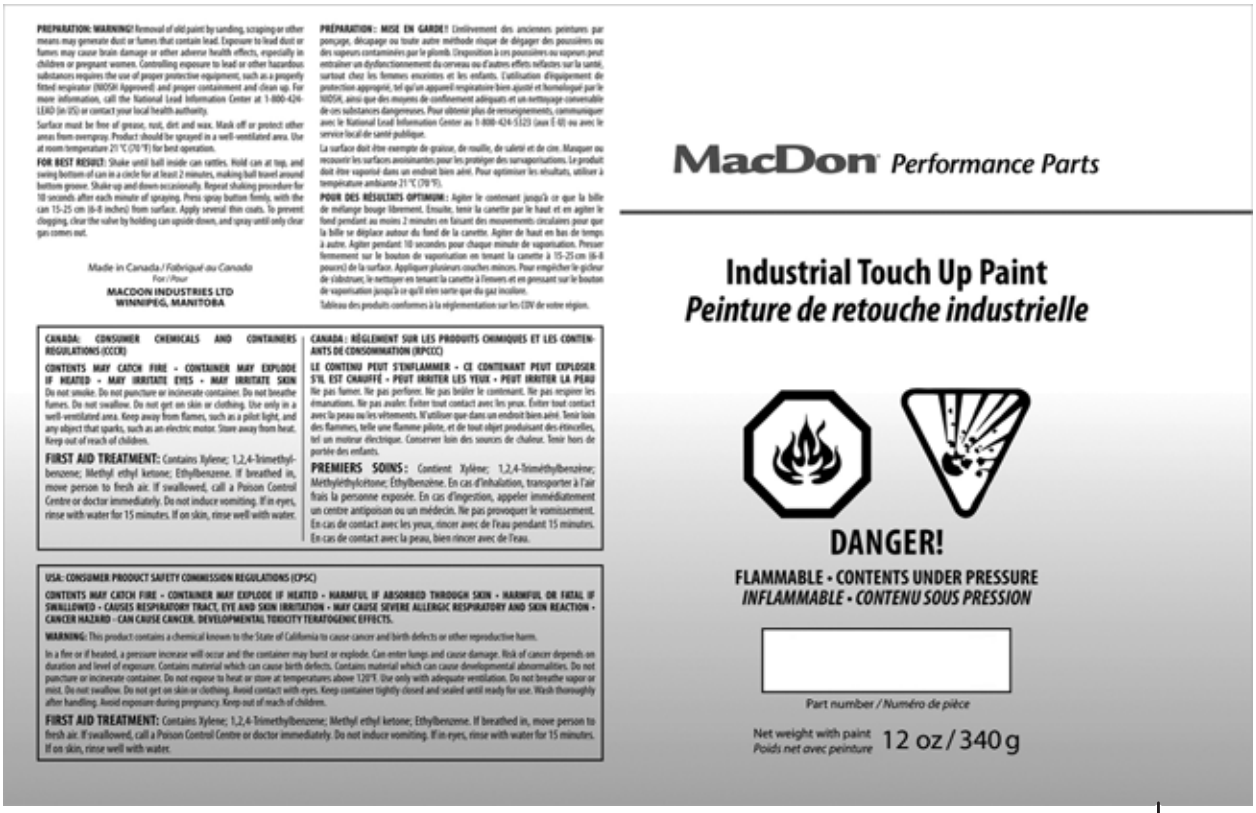

PREPARATION: WARNING! Removal of old paint by sanding, scraping or other means may generate dust or fumes that contain lead. Exposure to lead dust or fumes may cause brain damage or other adverse health effects, especially in children or pregnant women. Controlling exposure to lead or other hazardous substances requires the use of proper protective equipment, such as a properly fitted respirator (NIOSH Approved) and proper containment and clean up. For more information, call the National Lead Information Center at 1-800-424-LEAD (in US) or contact your local health authority.

Surface must be free of grease, rust, dirt and wax. Mask off or protect other areas from overspray. Product should be sprayed in a well-ventilated area. Use at room temperature 21 °C (70 °F) for best operation.

FOR BEST RESULT: Shake until ball inside can rattles. Hold can at top, and swing bottom of can in a circle for at least 2 minutes, making ball travel around bottom groove. Shake up and down occasionally. Repeat shaking procedure for 10 seconds after each minute of spraying. Press spray button firmly, with the can 15-25 cm (6-8 inches) from surface. Apply several thin coats. To prevent clogging, clear the valve by holding can upside down, and spray until only clear gas comes out.

Made in Canada / Fabriqué au Canada
For / Pour
MACDON INDUSTRIES LTD
WINNIPEG, MANITOBA

PRÉPARATION : MISE EN GARDE ! L'enlèvement des anciennes peintures par ponçage, décapage ou toute autre méthode risque de dégager des poussières ou des vapeurs contaminées par le plomb. L'exposition à ces poussières ou vapeurs peut entraîner un dysfonctionnement du cerveau ou d'autres effets néfastes sur la santé, surtout chez les femmes enceintes et les enfants. L'utilisation d'équipement de protection approprié, tel qu'un appareil respiratoire bien ajusté et homologué par le NIOSH, ainsi que des moyens de confinement adéquats et un nettoyage conviennent de ces substances dangereuses. Pour obtenir plus de renseignements, communiquer avec le National Lead Information Center au 1-800-424-5323 (aux É-U) ou avec le service local de santé publique.

La surface doit être exempte de graisse, de rouille, de saleté et de cire. Masquer ou recouvrir les surfaces avoisinantes pour les protéger des survaporisations. Le produit doit être vaporisé dans un endroit bien aéré. Pour optimiser les résultats, utiliser à température ambiante 21 °C (70 °F).

POUR DES RÉSULTATS OPTIMUM : Agiter le contenant jusqu'à ce que la bille de mélange bouge librement. Ensuite, tenir la canette par le haut et en agiter le fond pendant au moins 2 minutes en faisant des mouvements circulaires pour que la bille se déplace autour du fond de la canette. Agiter de haut en bas de temps à autre. Agiter pendant 10 secondes pour chaque minute de vaporisation. Presser fermement sur le bouton de vaporisation en tenant la canette à 15-25 cm (6-8 pouces) de la surface. Appliquer plusieurs couches minces. Pour empêcher le gicleur de s'obstruer, le nettoyer en tenant la canette à l'envers et en pressant sur le bouton de vaporisation jusqu'à ce qu'il n'en sorte que du gaz incolore.

Tableau des produits conformes à la réglementation sur les COV de votre région.

CANADA: CONSUMER CHEMICALS AND CONTAINERS REGULATIONS (CCCR)

CONTENTS MAY CATCH FIRE - CONTAINER MAY EXPLODE IF HEATED - MAY IRRITATE EYES - MAY IRRITATE SKIN

Do not smoke. Do not puncture or incinerate container. Do not breathe fumes. Do not swallow. Do not get on skin or clothing. Use only in a well-ventilated area. Keep away from flames, such as a pilot light, and any object that sparks, such as an electric motor. Store away from heat. Keep out of reach of children.

FIRST AID TREATMENT: Contains Xylene; 1,2,4-Trimethylbenzene; Methyl ethyl ketone; Ethylbenzene. If breathed in, move person to fresh air. If swallowed, call a Poison Control Centre or doctor immediately. Do not induce vomiting. If in eyes, rinse with water for 15 minutes. If on skin, rinse well with water.

CANADA : RÈGLEMENT SUR LES PRODUITS CHIMIQUES ET LES CONTENANTS DE CONSOMMATION (RPCCC)

LE CONTENU PEUT S'ENFLAMMER - CE CONTENANT PEUT EXPLOSER S'IL EST CHAUFFÉ - PEUT IRRITER LES YEUX - PEUT IRRITER LA PEAU

Ne pas fumer. Ne pas perforer. Ne pas brûler le contenant. Ne pas respirer les émanations. Ne pas avaler. Éviter tout contact avec les yeux. Éviter tout contact avec la peau ou les vêtements. N'utiliser que dans un endroit bien aéré. Tenir loin des flammes, telle une flamme pilote, et de tout objet produisant des étincelles, tel un moteur électrique. Conserver loin des sources de chaleur. Tenir hors de portée des enfants.

PREMIERS SOINS : Contient Xylène; 1,2,4-Triméthylbenzène; Méthyléthylcétone; Éthylbenzène. En cas d'inhalation, transporter à l'air frais la personne exposée. En cas d'ingestion, appeler immédiatement un centre antipoison ou un médecin. Ne pas provoquer le vomissement. En cas de contact avec les yeux, rincer avec de l'eau pendant 15 minutes. En cas de contact avec la peau, bien rincer avec de l'eau.

USA: CONSUMER PRODUCT SAFETY COMMISSION REGULATIONS (CPSC)

CONTENTS MAY CATCH FIRE - CONTAINER MAY EXPLODE IF HEATED - HARMFUL IF ABSORBED THROUGH SKIN - HARMFUL OR FATAL IF SWALLOWED - CAUSES RESPIRATORY TRACT, EYE AND SKIN IRRITATION - MAY CAUSE SEVERE ALLERGIC RESPIRATORY AND SKIN REACTION - CANCER HAZARD - CAN CAUSE CANCER. DEVELOPMENTAL TOXICITY TERATOGENIC EFFECTS.

WARNING: This product contains a chemical known to the State of California to cause cancer and birth defects or other reproductive harm.

In a fire or if heated, a pressure increase will occur and the container may burst or explode. Can enter lungs and cause damage. Risk of cancer depends on duration and level of exposure. Contains material which can cause birth defects. Contains material which can cause developmental abnormalities. Do not puncture or incinerate container. Do not expose to heat or store at temperatures above 120°F. Use only with adequate ventilation. Do not breathe vapor or mist. Do not swallow. Do not get on skin or clothing. Avoid contact with eyes. Keep container tightly closed and sealed until ready for use. Wash thoroughly after handling. Avoid exposure during pregnancy. Keep out of reach of children.

FIRST AID TREATMENT: Contains Xylene; 1,2,4-Trimethylbenzene; Methyl ethyl ketone; Ethylbenzene. If breathed in, move person to fresh air. If swallowed, call a Poison Control Centre or doctor immediately. Do not induce vomiting. If in eyes, rinse with water for 15 minutes. If on skin, rinse well with water.

MacDon Performance Parts

Industrial Touch Up Paint
Peinture de retouche industrielle

DANGER!
FLAMMABLE - CONTENTS UNDER PRESSURE
INFLAMMABLE - CONTENU SOUS PRESSION

Part number / *Numéro de pièce*

Net weight with paint / *Poids net avec peinture* 12 oz / 340 g

1

2

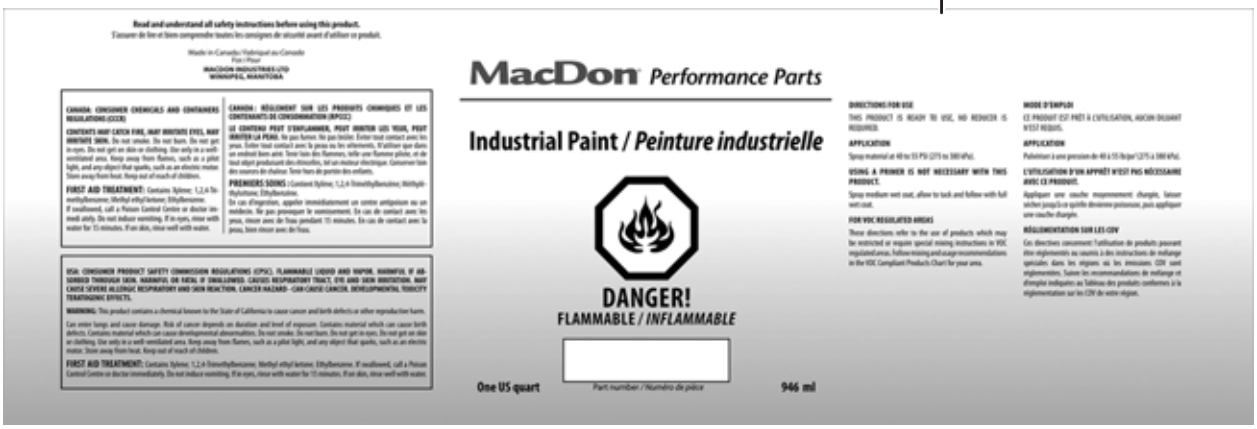

Read and understand all safety instructions before using this product.
S'assurer de lire et bien comprendre toutes les consignes de sécurité avant d'utiliser ce produit.

Made in Canada / Fabriqué au Canada
For / Pour
MACDON INDUSTRIES LTD
WINNIPEG, MANITOBA

CANADA: CONSUMER CHEMICALS AND CONTAINERS REGULATIONS (CCCR)

CONTENTS MAY CATCH FIRE, MAY IRRITATE EYES, MAY IRRITATE SKIN. Do not smoke. Do not burn. Do not get in eyes. Do not get on skin or clothing. Use only in a well-ventilated area. Keep away from flames, such as a pilot light, and any object that sparks, such as an electric motor. Store away from heat. Keep out of reach of children.

FIRST AID TREATMENT: Contains Xylene; 1,2,4-Trimethylbenzene; Methyl ethyl ketone; Ethylbenzene. If swallowed, call a Poison Control Centre or doctor immediately. Do not induce vomiting. If in eyes, rinse with water for 15 minutes. If on skin, rinse well with water.

CANADA : RÈGLEMENT SUR LES PRODUITS CHIMIQUES ET LES CONTENANTS DE CONSOMMATION (RPCCC)

LE CONTENU PEUT S'ENFLAMMER, PEUT IRRITER LES YEUX, PEUT IRRITER LA PEAU. Ne pas fumer. Ne pas brûler. Éviter tout contact avec les yeux. Éviter tout contact avec la peau ou les vêtements. N'utiliser que dans un endroit bien aéré. Tenir loin des flammes, telle une flamme pilote, et de tout objet produisant des étincelles, tel un moteur électrique. Conserver loin des sources de chaleur. Tenir hors de portée des enfants.

PREMIERS SOINS : Contient Xylène; 1,2,4-Triméthylbenzène; Méthyléthylcétone; Éthylbenzène.

En cas d'ingestion, appeler immédiatement un centre antipoison ou un médecin. Ne pas provoquer le vomissement. En cas de contact avec les yeux, rincer avec de l'eau pendant 15 minutes. En cas de contact avec la peau, bien rincer avec de l'eau.

USA: CONSUMER PRODUCT SAFETY COMMISSION REGULATIONS (CPSC). FLAMMABLE LIQUID AND VAPOR. HARMFUL IF ABSORBED THROUGH SKIN. HARMFUL OR FATAL IF SWALLOWED. CAUSES RESPIRATORY TRACT, EYE AND SKIN IRRITATION. MAY CAUSE SEVERE ALLERGIC RESPIRATORY AND SKIN REACTION. CANCER HAZARD - CAN CAUSE CANCER. DEVELOPMENTAL TOXICITY TERATOGENIC EFFECTS.

WARNING. This product contains a chemical known to the State of California to cause cancer and birth defects or other reproductive harm.

Can enter lungs and cause damage. Risk of cancer depends on duration and level of exposure. Contains material which can cause birth defects. Contains material which can cause developmental abnormalities. Do not smoke. Do not burn. Do not get in eyes. Do not get on skin or clothing. Use only in a well-ventilated area. Keep away from flames, such as a pilot light, and any object that sparks, such as an electric motor. Store away from heat. Keep out of reach of children.

FIRST AID TREATMENT: Contains Xylene; 1,2,4-Trimethylbenzene; Methyl ethyl ketone; Ethylbenzene. If swallowed, call a Poison Control Centre or doctor immediately. Do not induce vomiting. If in eyes, rinse with water for 15 minutes. If on skin, rinse well with water.

MacDon Performance Parts

Industrial Paint / *Peinture industrielle*

DANGER!
FLAMMABLE / *INFLAMMABLE*

Part number / *Numéro de pièce*

One US quart

946 ml

DIRECTIONS FOR USE
THIS PRODUCT IS READY TO USE, NO REDUCER IS REQUIRED.

APPLICATION
Spray material at 40 to 55 PSI (275 to 380 kPa).

USING A PRIMER IS NOT NECESSARY WITH THIS PRODUCT.
Spray medium wet coat, allow to tack and follow with full wet coat.

FOR VOC REGULATED AREAS
These directions refer to the use of products which may be restricted or require special mixing instructions in VOC regulated areas. Follow mixing and usage recommendations in the VOC Compliant Products Chart for your area.

MODE D'EMPLOI
CE PRODUIT EST PRÊT À L'UTILISATION, AUCUN DILUANT N'EST REQUIS.

APPLICATION
Pulvériser à une pression de 40 à 55 lb/po² (275 à 380 kPa).

L'UTILISATION D'UN APPRÊT N'EST PAS NÉCESSAIRE AVEC CE PRODUIT.
Appliquer une couche moyennement chargée, laisser sécher jusqu'à ce qu'elle devienne poisseuse, puis appliquer une couche chargée.

RÉGLEMENTATION SUR LES COV
Ces directives concernent l'utilisation de produits pouvant être réglementés ou soumis à des instructions de mélange spéciales dans les régions où les émissions COV sont réglementées. Suivre les recommandations de mélange et d'emploi indiquées au Tableau des produits conformes à la réglementation sur les COV de votre région.

1037431

PAINT

Ref	Part Number	Description	Qty	Serial Number
1	135148	PAINT – BLACK (55-65 GLOSS LEVEL), SPRAY CAN, 12 OZ. (340 G) AEROSOL [174]		
	32879	PAINT – WHITE, SPRAY CAN, 12 OZ. (340 G) AEROSOL [174]		
	23950	PAINT – RED, SPRAY CAN, 12 OZ. (340 G) AEROSOL [174]		
2	25991	PAINT – BLACK (55-65 GLOSS LEVEL), 1 US QUART (946 ML)		
	23957	PAINT – WHITE, 1 US QUART (946 ML)		
	32880	PAINT – RED, 1 US QUART (946 ML)		

174. To be used for small touch-ups only.

46 (Option) Combine Header Coupler Kit

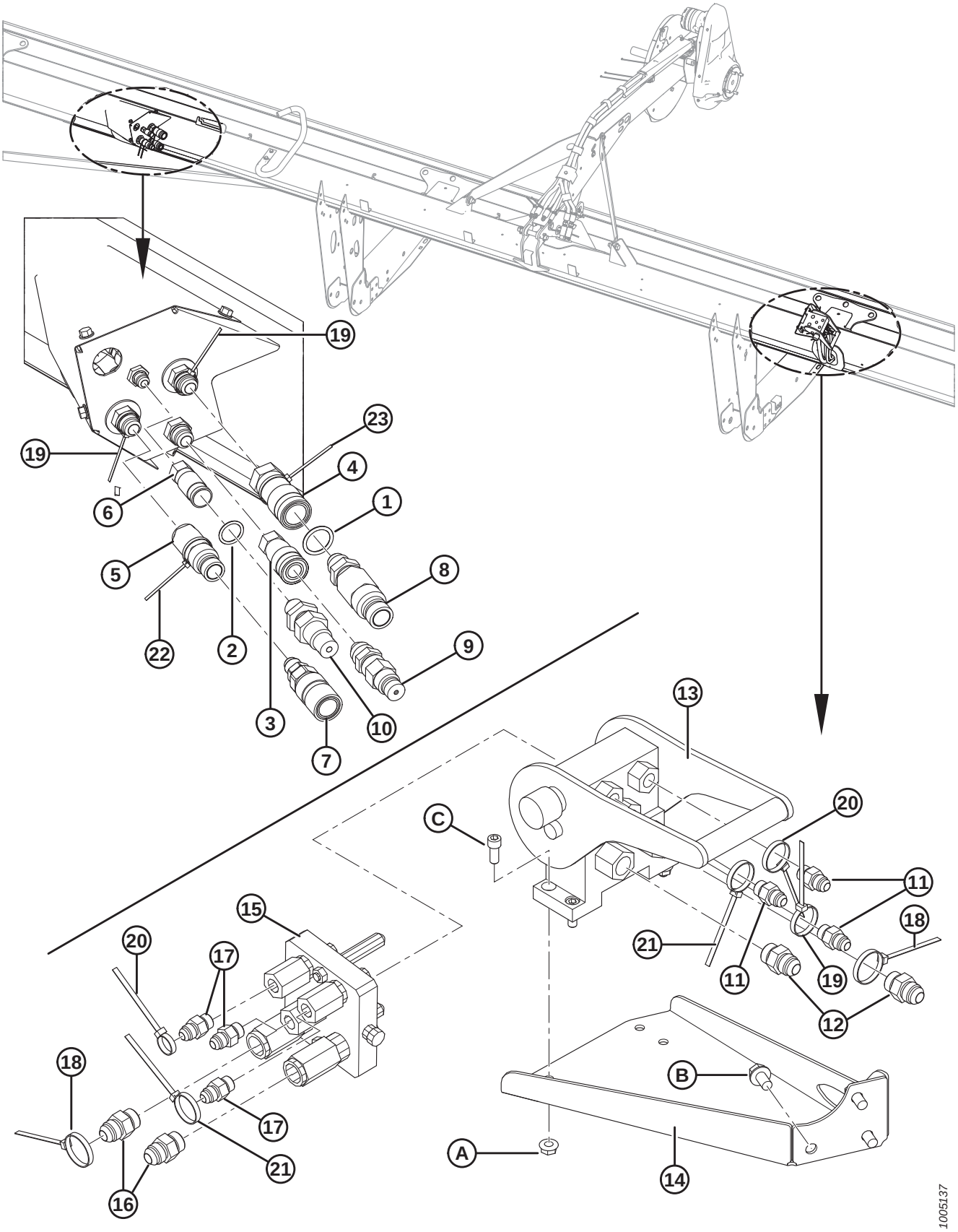

(OPTION) COMBINE HEADER COUPLER KIT

Ref	Part Number	Description	Qty	Serial Number
	B5747	KIT – HYDRAULIC QUICK COUPLER [175]		
1	30971	O-RING (SAE #12)	3	
2	44209	O-RING (SAE #8)	1	
3	135474	COUPLER – HYDRAULIC, 1/2 IN. FEMALE FF	1	
4	135565	COUPLER – FEMALE HYD. 3/4 IN. FLAT FACE	1	
5	135566	COUPLING – MALE HYD. 3/4 IN. FLAT FACE	1	
6	135312	COUPLER – FEMALE HYD. 3/8 IN. FLAT FACE	1	
7	135204	COUPLING – FEMALE HYD. 3/4 IN. FLAT FACE BULK.	1	
8	135205	COUPLING – MALE HYD. 3/4 IN. FLAT FACE BULK.	1	
9	135236	COUPLING – MALE HYD. 1/2 IN. FLAT FACE BULK.	1	
10	135237	COUPLER – MALE HYD. 3/8 IN. FLAT FACE BULKHEAD	1	
11	15903	FITTING – CONN 3/8 TUBE 37° FLARE X 9/16-18 ORB	3	
12	21030	FITTING – CONN 1/2 TUBE 37° FLARE X 3/4-16 ORB	2	
13	153151	COUPLING – MULTI (HEADER SIDE)	1	
	129800	KIT – COVER		
	129801	KIT – LATCH BUTTON		
	129976	COUPLING – 1/4 IN.		
	129977	COUPLING – 3/8 IN.		
14	125553	HOLDER – REEL DRIVE MULTI-COUPLER	1	
15	135238	COUPLING – MULTI LINK (ADAPTER SIDE)	1	
	111981	SEAL KIT – 1/4 IN. COUPLER		
	111982	SEAL KIT – 3/8 IN. COUPLER		
	111983	KIT – SCREW		
	111984	KIT – DOWEL		
	111985	COUPLER – 3/8 IN. (LONG)		
	111986	COUPLER – 1/4 IN.		
	294350	COUPLER – SHORT, 3/8 IN. (SHORT)		
16	135373	FITTING – HYD 8 ORB MALE X 8 JIC SVL FEMALE	2	
17	135015	FITTING – ADAPTER HYD	3	
18	40701	FASTENER – CABLE TIE (YELLOW)	2	
19	21763	FASTENER – CABLE TIE (BLACK)	2	
20	49227	FASTENER – CABLE TIE (GREEN)	2	
21	40702	FASTENER – CABLE TIE (RED)	2	
22	40703	FASTENER – CABLE TIE (BLUE)	2	
23	40704	FASTENER – CABLE TIE (ORANGE)	2	
A	30280	NUT – FLG SIDE LK SMTH FACE 5/16 NC GR 5 ZP		
B	101898	SCREW – HEX WASH HD THD ROLLING 3/8 NC X 5/8		
C	135397	BOLT – SOCKET HD HEX 5/16 NC X 3/4		

175. Kits available through Whole Goods only.

47 (Option) Crop Lifters

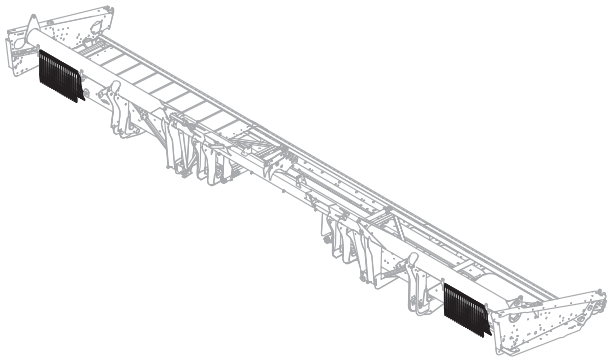

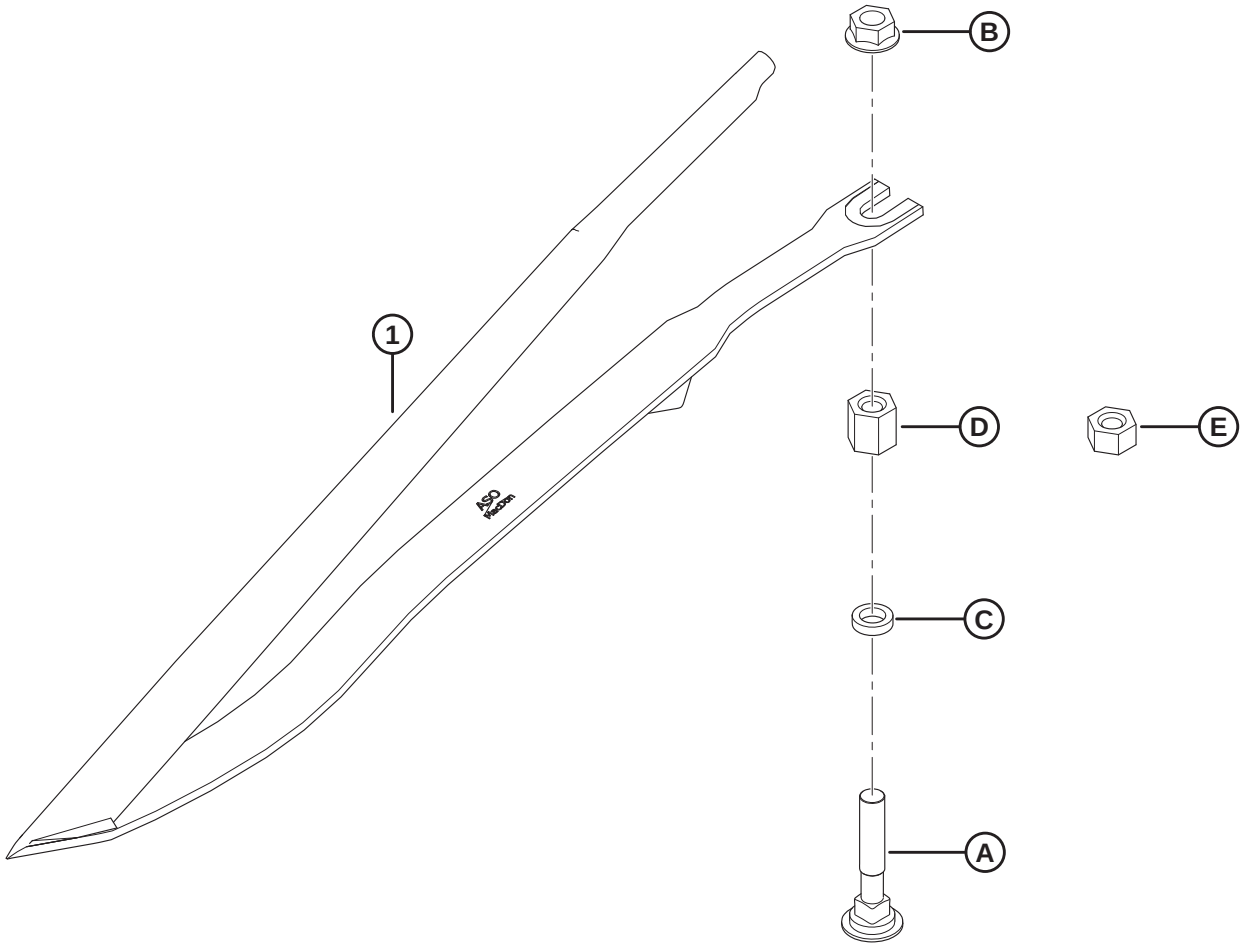

1020487

(OPTION) CROP LIFTERS

NOTE:

A single kit (MD #B6411) contains ten steel crop lifters (MD #255929) and hardware.

Ref	Part Number	Description	Qty	Serial Number
	B6411	KIT – CROP LIFTERS [176]		
1	255929	STEEL CROP LIFTER [177]	A/R	
A	279575	BOLT – RHSN 7/16-14 X 2.5-GR5-ZP		
B	21761	NUT – FLG SMOOTH FACE 1/16 NC GR 5 ZP		
C	255930	WASHER – FLAT		
D	255927	NUT – HEX COUPLING 7/16-14 20 MM LG [178]		
E	255928	NUT – HEX COUPLING 7/16-14 11 MM LG [179]		

176. Quantity of kits required varies depending on header width. Complete header quantities: 15–25 ft. = 2, 25–30 ft. = 3, 35–40 ft. = 4, 45 ft. = 5. Kits available through Whole Goods only with a new header. For existing headers, order steel crop lifters (MD #255929) and hardware A–E as required.
177. Complete header quantities: 15–25 ft. = 20, 25–30 ft. = 30, 35–40 ft. = 40, 45 ft. = 50.
178. For tracked combines.
179. For wheeled combines.

48 (Option) Crop Lifter Rack

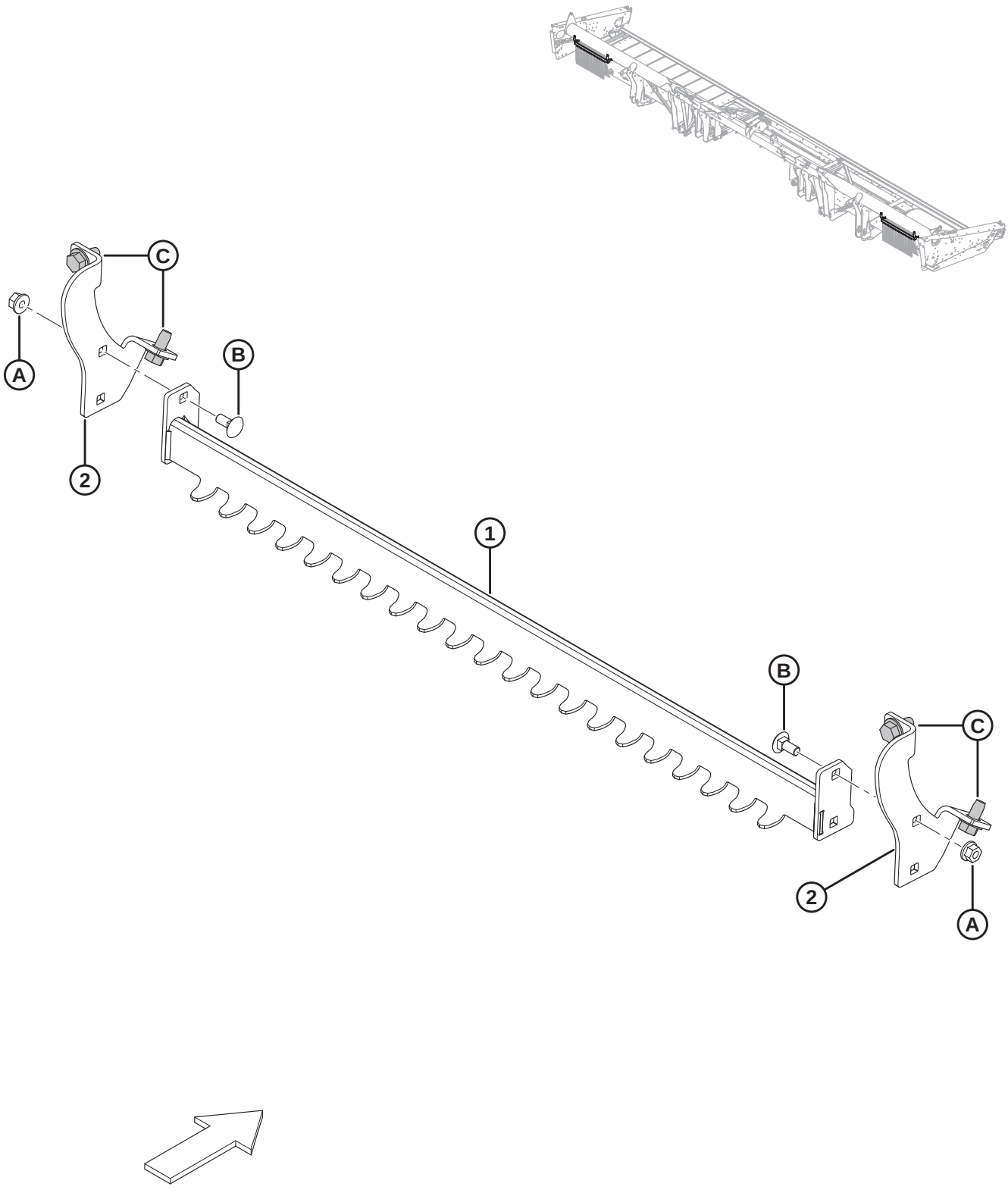

1020488

(OPTION) CROP LIFTER RACK

Ref	Part Number	Description	Qty	Serial Number
	B6376	CROP LIFTER RACK [180]		
1	279636	SUPPORT – LIFTER RACK WELDT	2	
2	279876	SUPPORT – LIFTER RACK	4	
A	152863	NUT – HEX FLG STVR LOC M8 X 1.25-10-AA2L		
B	197171	BOLT – RHSN M8 X 1.25 X 20-8.8-A2L		
C	136209	SCREW – HEX WASHER HD M10 X 1.5 X 20-450HV-A3L		

180. Kits available through Whole Goods only.

49 (Option) Double Draper Drive

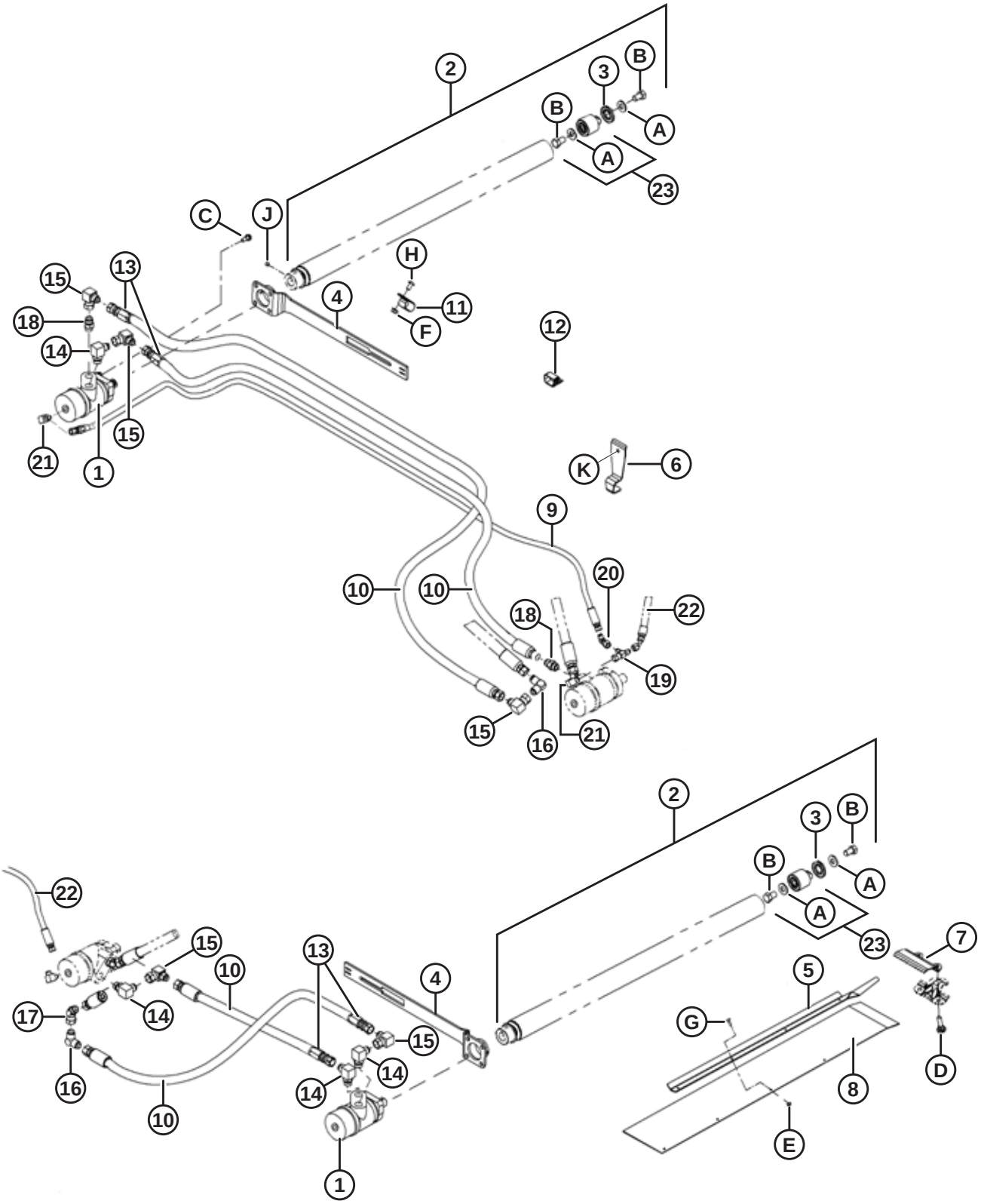

1019890

(OPTION) DOUBLE DRAPER DRIVE

Ref	Part Number	Description	Qty	Serial Number
	B6154	KIT – DOUBLE DRAPER [181]		
1	220936	MOTOR – HYD DANFOSS 2.44 CI	2	
	220944	SEAL KIT	2	
2	255410	ASSY – RIBBED ROLLER W/ SCREWS [182]	2	
3	120845	SEAL – NILOS LSTO STEEL DISK	2	
4	255431	ARM – WELDT	2	
5	174695	SUPPORT	1	
6	174697	CLAMP	8	
7	174706	RETAINER – DEFLECTOR	1	
8	174707	DEFLECTOR – RUBBER	1	
9	174708	HOSE – HYD	1	
10	174709	HOSE – HYD	4	
11	50022	CLAMP – INSULATED 15/16 IN.	4	
12	135443	FASTENER – CINCH STRAP 4 IN. LG	8	
13	174710	FITTING – REUSABLE HOSE END [183]	4	
14	21843	FITTING – ELBOW 90° HYD	4	
15	30556	FITTING – ELBOW 90° HYD	5	
16	30557	FITTING – ELBOW 90° HYD	2	
17	135434	FITTING – ELBOW 45° SWIVEL SAE	1	
18	30695	FITTING – CONNECTOR HYD	2	
19	30873	FITTING – HYD TEE	2	
20	30875	FITTING – ELBOW 45° HYD	4	
21	50104	FITTING – ELBOW 90° HYD	2	
22	220841	HOSE – HYD	1	
23	165735	PIN ASSY – DRAPER ROLLER	2	
	132607	BEARING – DOUBLE ROW BALL 52 O.D. X 25 BORE		
	108268	FITTING – HYD TEE (NOT ILLUSTRATED) [184]	1	
	30981	FITTING – ADAPTER HYD REDUCER 1/2 X 3/8 (NOT ILLUSTRATED) [185]	1	
A	30441	WASHER – HARDENED		
B	145249	BOLT – HH 5/8 NF X 1.0 LG GR 5 ZP		
C	172259	BOLT – SHOULDER .375-16 UNC		
D	120639	BOLT – RHSN SPECIAL 7/16 NC X 1.75 LG GR 5 ZP		
E	135626	NUT – CSK CENTER LOCK #12-24 NC (50 PACK)		
F	30228	NUT – FLANGE DT SMOOTH FACE 0.375-16 UNC		
G	135628	SCREW – BHRN #12-24 NC X 0.67 IN. LG (50 PACK)		
H	135157	SCREW – MACHINE		
J	132451	SCREW – SET HEX SKT KNURL CUP 3/8 NC X 3/8 LG		

181. Kits available through Whole Goods only.
182. Includes steel disk seal (MD #120845), draper roller pin assembly (MD #165735), and two set screws (MD #132451).
183. Provided with hose (MD #174709).
184. Only used with self-propelled windrowers.
185. Only used on timed double-knife headers with self-propelled windrowers.

(OPTION) DOUBLE DRAPER DRIVE

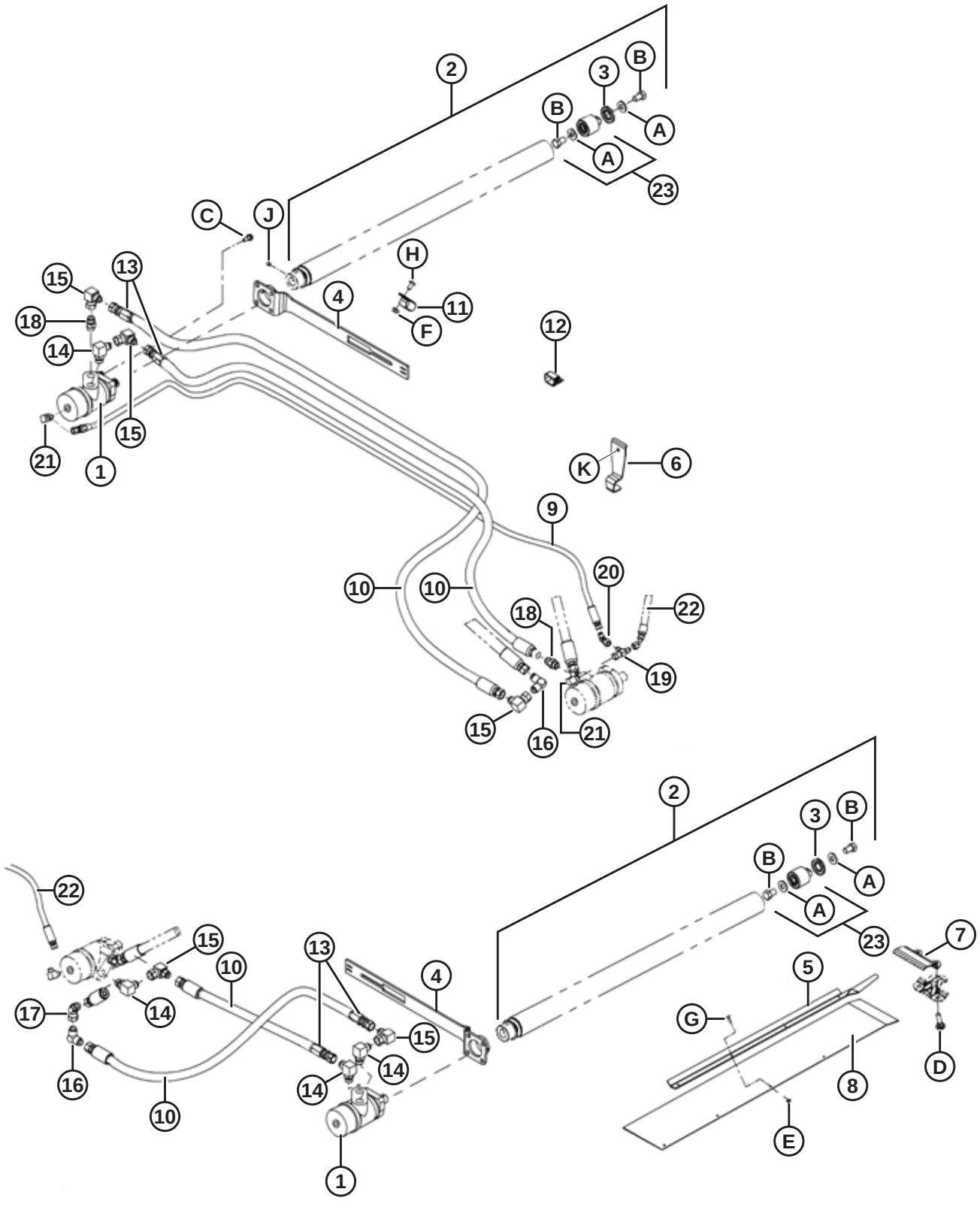

Ref	Part Number	Description	Qty	Serial Number
K	21863	BOLT – RHSSN 3/8 NC X 0.75 LG GR 5 ZP		
	21069	NUT – TUBE 37° JIC 1/2 IN. (NOT ILLUSTRATED) [185]		

50 (Option) Draper Extension Kit

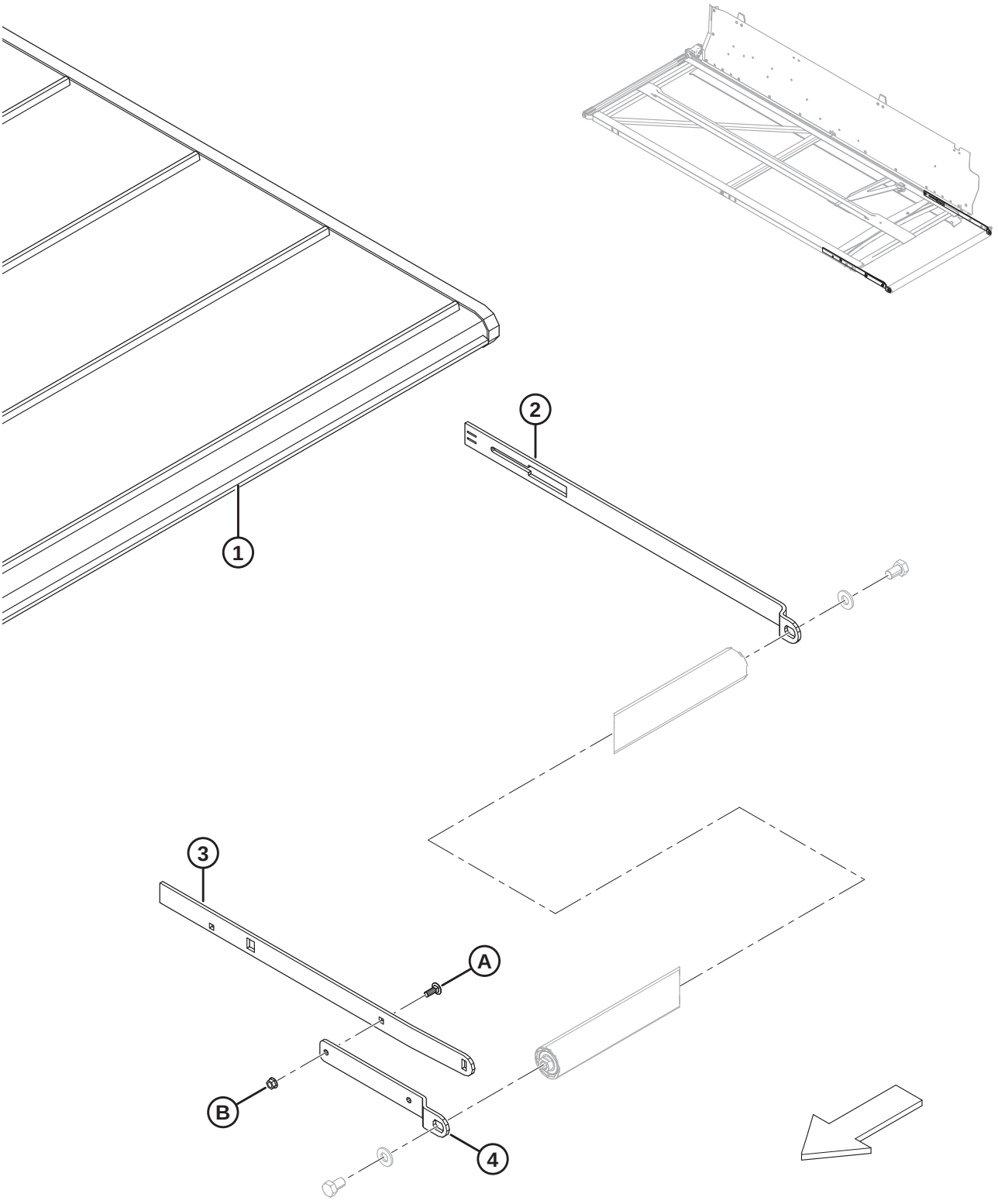

(OPTION) DRAPER EXTENSION KIT

Ref	Part Number	Description	Qty	Serial Number
	B5407	KIT – DRAPER EXTENSION [186]	1	
1	220641	DRAPER – REPAIR KIT	2	
2	174528	ARM – REAR SUPPORT	2	
3	174559	ARM – INNER ROLLER SUPPORT	2	
4	174560	ARM – OUTER ROLLER SUPPORT	2	
A	19965	BOLT – RHSN 3/8 NC X 1.0 GR 5 ZP		
B	30228	NUT – FLANGE DT SMOOTH FACE 0.375-16 UNC		

186. Kits available through Whole Goods only.

51 (Option) Foot Switch

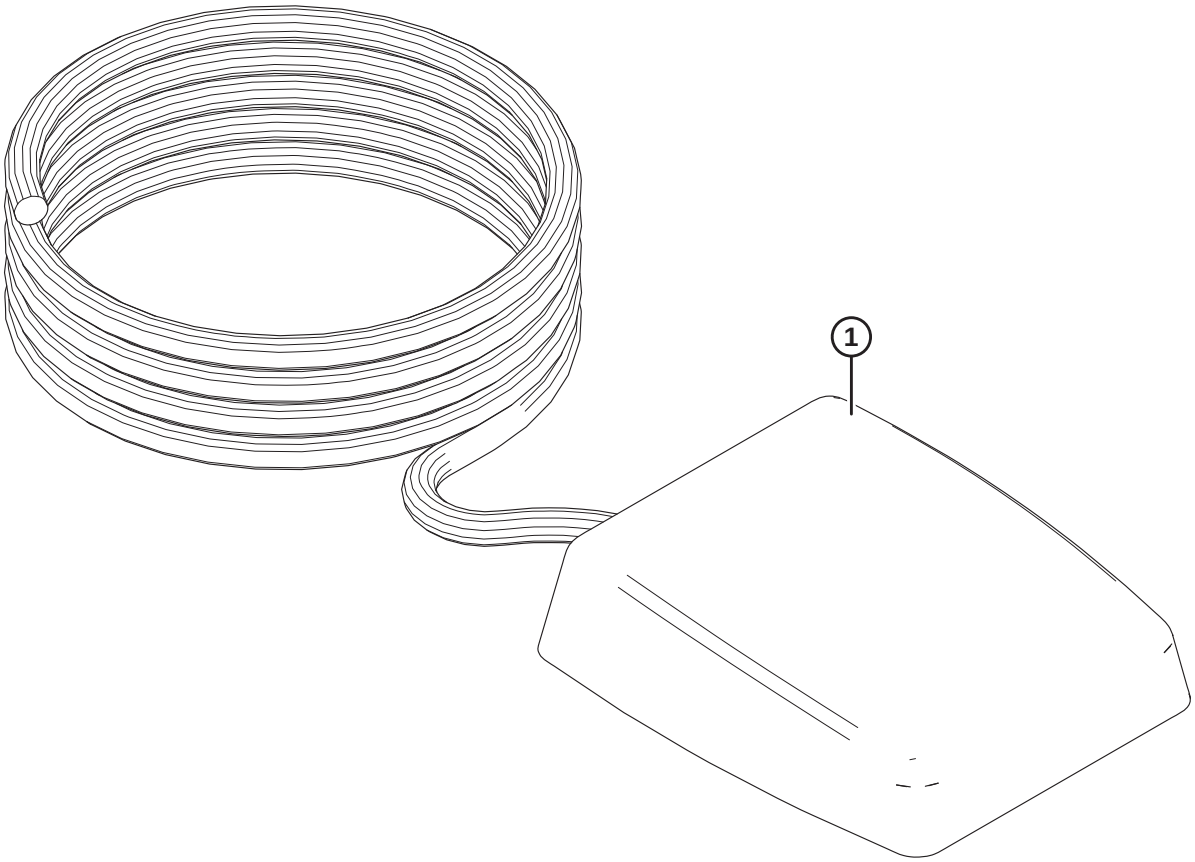

1026305

(OPTION) FOOT SWITCH

Ref	Part Number	Description	Qty	Serial Number
	B6212	KIT – HEADER TILT FOOT SWITCH [187]		
1	287537	KIT – FOOT SWITCH [188]	1	

187. Kits available through Whole Goods only.
188. Kit provides an additional way to control the selection between reel fore-aft and tilt on an AGCO (Challenger, Gleaner, or Massey Ferguson) or John Deere combine operating a MacDon FM100 Float Module and Draper or FlexDraper® header. The foot switch can be used to toggle the tilt functionality ON instead of using the existing selector switch. Kit includes foot switch and instructions.

52 (Option) Multi-Crop Rapid Reel Conversion Kit

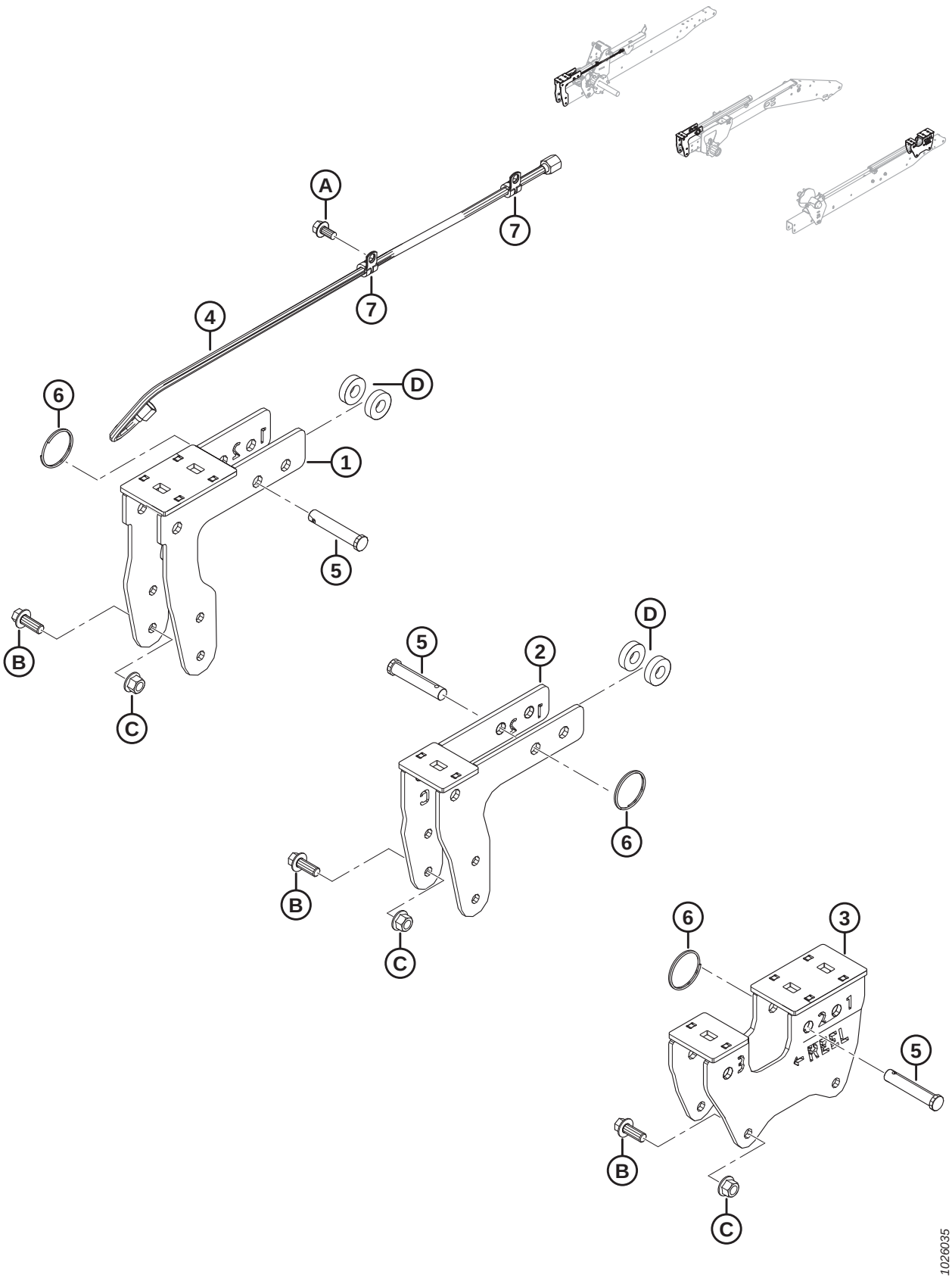

(OPTION) MULTI-CROP RAPID REEL CONVERSION KIT

Ref	Part Number	Description	Qty	Serial Number
	B6590	KIT – MULTI-CROP RAPID REEL CONVERSION [189]		
1	294598	BRACKET – RHS CAM BRACKET	1	
2	294601	BRACKET – CENTER CAM BRACKET	1	
3	294599	BRACKET – LHS CAM BRACKET	1	
4	245362	HOSE – HYD, 0.25 IN. I.D., 950 MM LG, 100R17, METAL REIN.	1	
5	18624	PIN – CLEVIS, 15.71 MM, 70 MM, ZN PL	3	
6	118137	RING – EXTERNAL, 2 INCH, .087	3	
7	135233	CLAMP – DOUBLE HOSE INSULATED	2	
A	101898	SCREW – HEX WASH HD THD ROLLING 3/8 NC X 5/8		
B	148798	BOLT – HEX FLG HD M12 X 1.75 X 30-10.9-A3L		
C	136431	NUT – HEX FLG CTR LOC M12 X 1.75-10-A3L		
D	40915	WASHER – FLAT		

189. Kit required to reduce the time needed to change the reel position from current location to the rapeseed/canola position. Intended for our Western European and North American markets, where straight-cut canola applications are required. Includes all listed parts and instructions. Kits available through Whole Goods only.

53 (Option) Pick-up Reel-End Fingers Kit

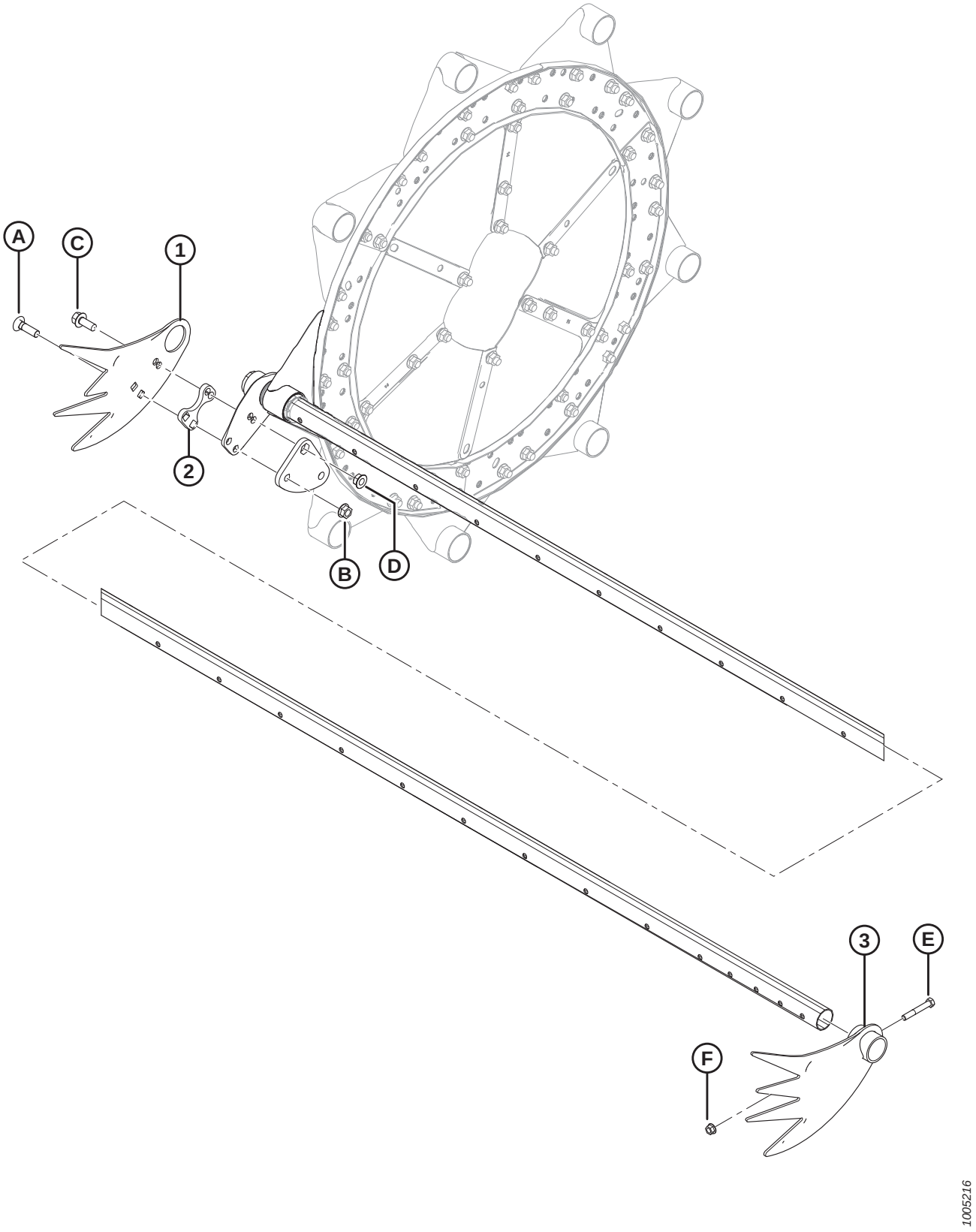

(OPTION) PICK-UP REEL-END FINGERS KIT

Ref	Part Number	Description	Qty	Serial Number
	B4831	KIT – PICK-UP REEL, END FINGERS [190]		
1	137794	FINGER – LODGED CROP, CAM END	3	
2	137795	SHIM – LODGED CROP FINGER	3	
3	137924	FINGER – LODGED CROP, TAIL END	3	
A	30515	BOLT – RHSN, 1/2 NC X 1-3/4, GR 5		
B	50186	NUT – LOCK, SMOOTH FLANGE, 1/2 NC DT		
C	30368	BOLT – FLANGE HEAD 1/2 NC X 1-1/4 GR 5		
D	21383	NUT – SERRATED FLANGE LOCK, 1/2 NC		
E	21102	BOLT – HEX HD 3/8 NC X 2-1/2 GR 5		
F	30228	NUT – LOCK, SMOOTH FLG, 3/8 NC, DT		

190. Kits available through Whole Goods only.

54 (Option) Pointed Guard Kit, Single Knife

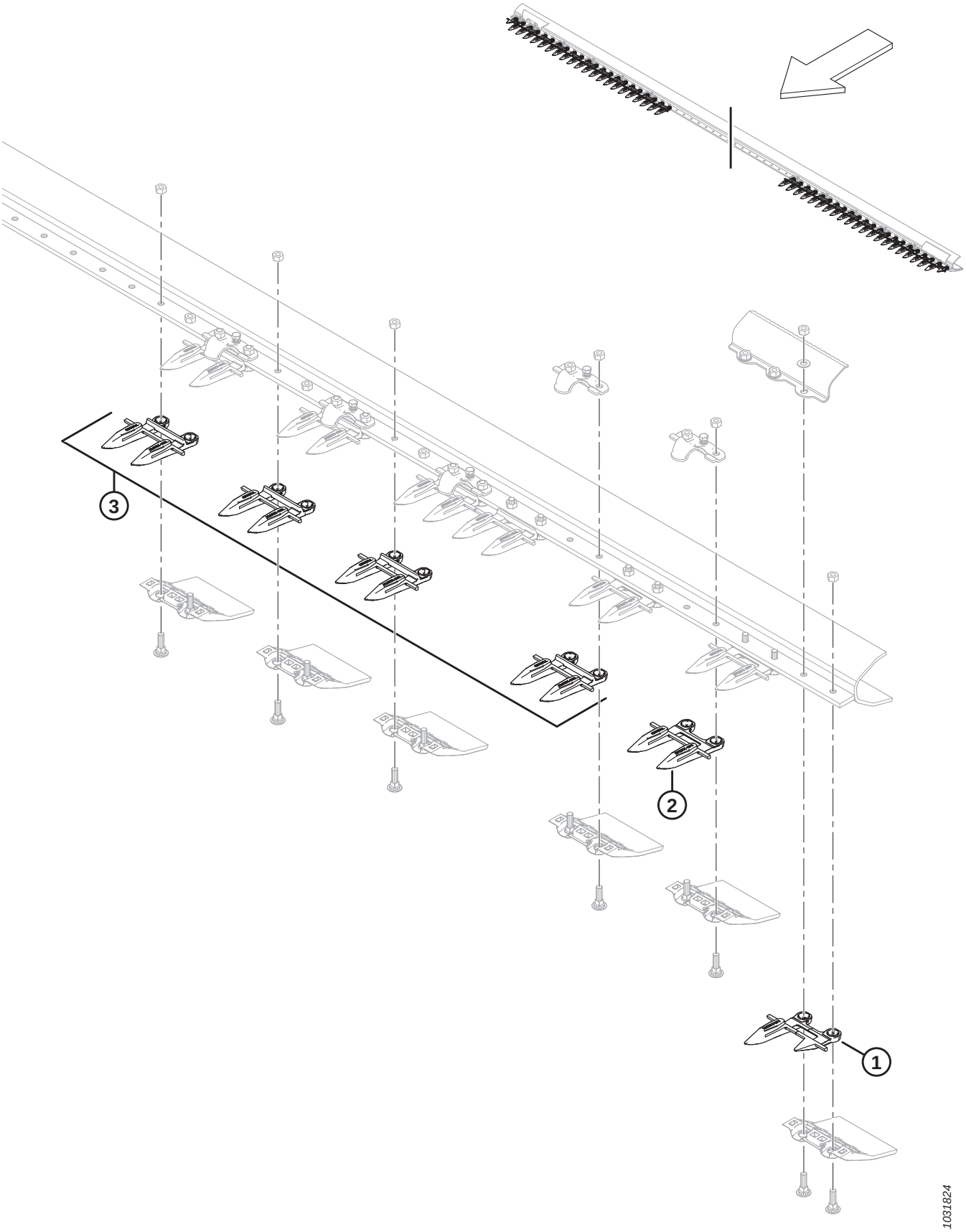

(OPTION) POINTED GUARD KIT, SINGLE KNIFE

NOTE:

Illustration; Left end shown (right end is similar). Single knife, pointed guards only.

Ref	Part Number	Description	Qty	Serial Number
	304990	KIT – POINTED GUARDS 25 FT SK [191]		
	304991	KIT – POINTED GUARDS 30 FT SK [191]		
	304992	KIT – POINTED GUARDS 35 FT SK [191]		
	304993	KIT – POINTED GUARDS 40 FT SK [191]		
1	118301	SICKLE GUARD – LH, OUTBOARD (DRIVE END)	1	
	118302	SICKLE GUARD – RH, OUTBOARD	1	
2	118345	SICKLE GUARD – W/ POINTS, W/O WEARBAR (DRIVE END)	3	
3	118344	SICKLE GUARD – W/ POINTS [192]		

191. Includes all listed parts.

192. Quantities per kit: 25 ft. = 45, 30 ft. = 55, 35 ft. = 65, 40 ft. = 75.

55 (Option) Pointed Guard Kit, Double Knife

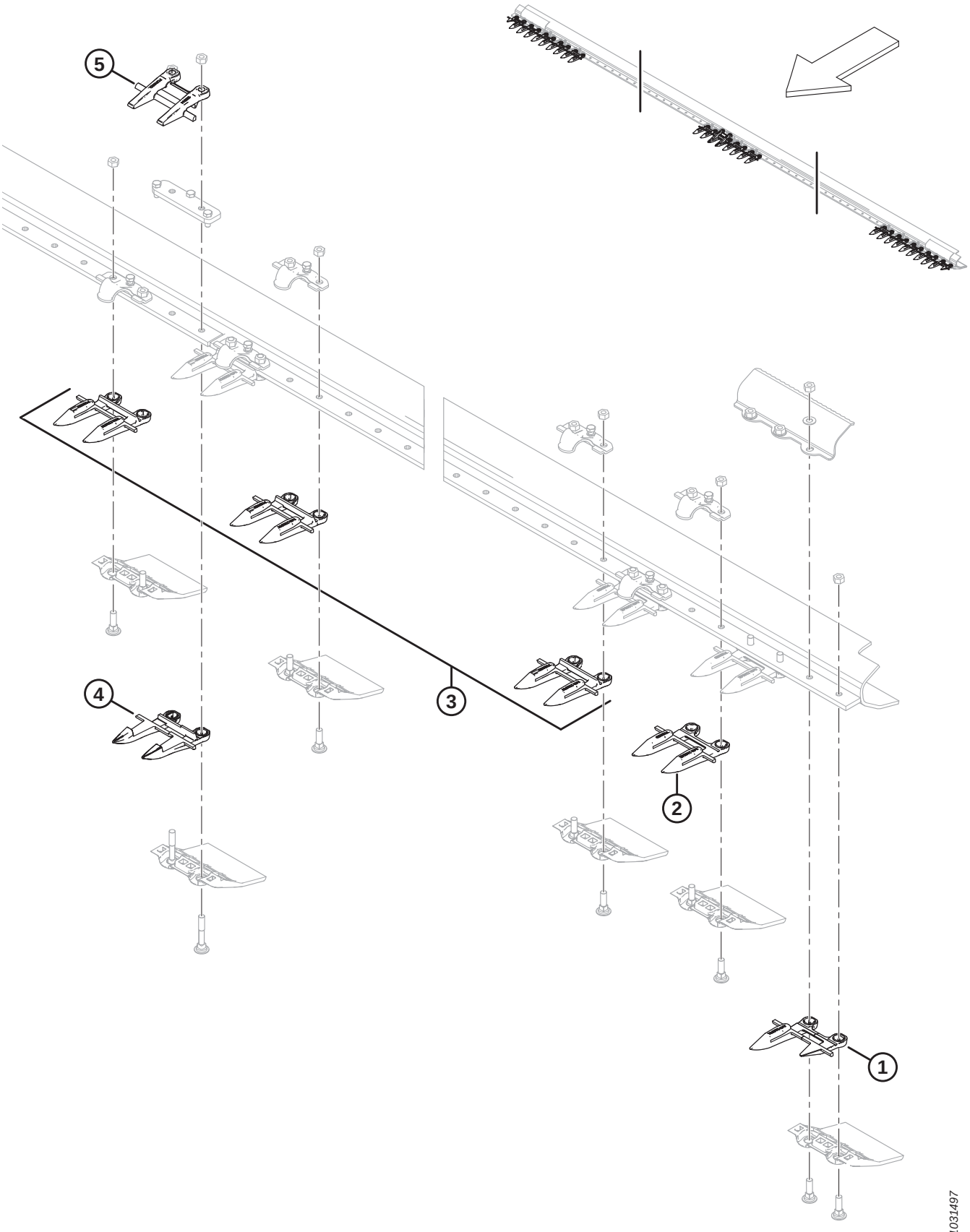

(OPTION) POINTED GUARD KIT, DOUBLE KNIFE

NOTE:

Illustration; Left end and middle shown (right end is similar). Double knife, pointed guards only.

Ref	Part Number	Description	Qty	Serial Number
	304985	KIT – POINTED GUARDS 25 FT DK [193]		
	304986	KIT – POINTED GUARDS 30 FT DK [193]		
	304987	KIT – POINTED GUARDS 35 FT DK [193]		
	304988	KIT – POINTED GUARDS 40 FT DK [193]		
	304989	KIT – POINTED GUARDS 45 FT DK [193]		
1	118301	SICKLE GUARD – LH, OUTBOARD	1	
	118302	SICKLE GUARD – RH, OUTBOARD	1	
2	118345	SICKLE GUARD – W/ POINTS, W/O WEARBAR (3 PER END)	6	
3	118344	SICKLE GUARD – W/ POINTS [194]		
4	124338	SICKLE GUARD – CENTER, POINTED	1	
5	124344	GUIDE – TOP-CENTER	1	

193. Includes all listed parts.

194. Quantities per kit: 25 ft. = 41, 30 ft. = 51, 35 ft. = 61, 40 ft. = 71, 45 ft. = 81.

56 (Option) Reel Arm Extension Kit

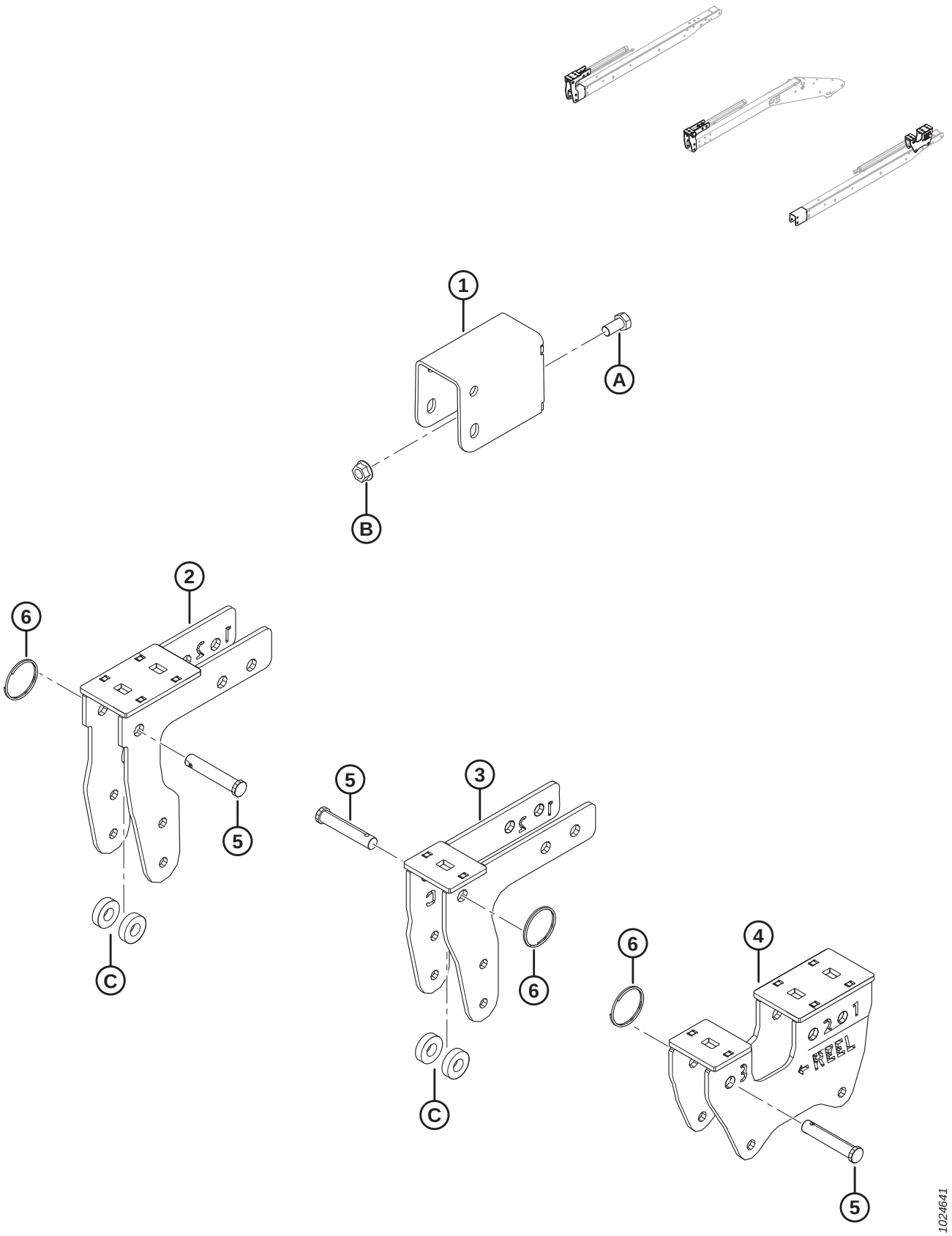

(OPTION) REEL ARM EXTENSION KIT

NOTE:

Reel Arm Extension Kit (MD #B6591) is **NOT** compatible with Vertical Knife Mounts (MD #B6137 and B6138).

Ref	Part Number	Description	Qty	Serial Number
	B6591	KIT – REEL ARM EXTENSION (EXPORT ONLY) [195]		
1	245926	SUPPORT WELDMENT	2	
2	294598	BRACKET – RHS CAM WELDT	1	
3	294601	BRACKET – CENTER CAM WELDT	1	
4	294599	BRACKET – LHS CAM WELDT	1	
5	18624	PIN – CLEVIS, 15.71 MM, 70 MM, ZN PL	3	
6	118137	RING – EXTERNAL, 2 INCH, .087	3	
A	21575	BOLT – HH 1/2 NC X 1.0 LG GR 5 ZP		
B	50186	NUT – FLG LOCK SMTH FACE DT 0.500-13 UNC GR 5		
C	40915	WASHER – FLAT		

195. Kit provides extended reel fore/aft range (from furthest forward to furthest rearward) on headers equipped with short reel arms. Kit includes all listed parts and instructions. Kits available through Whole Goods only.

57 (Option) Rice Divider Rods

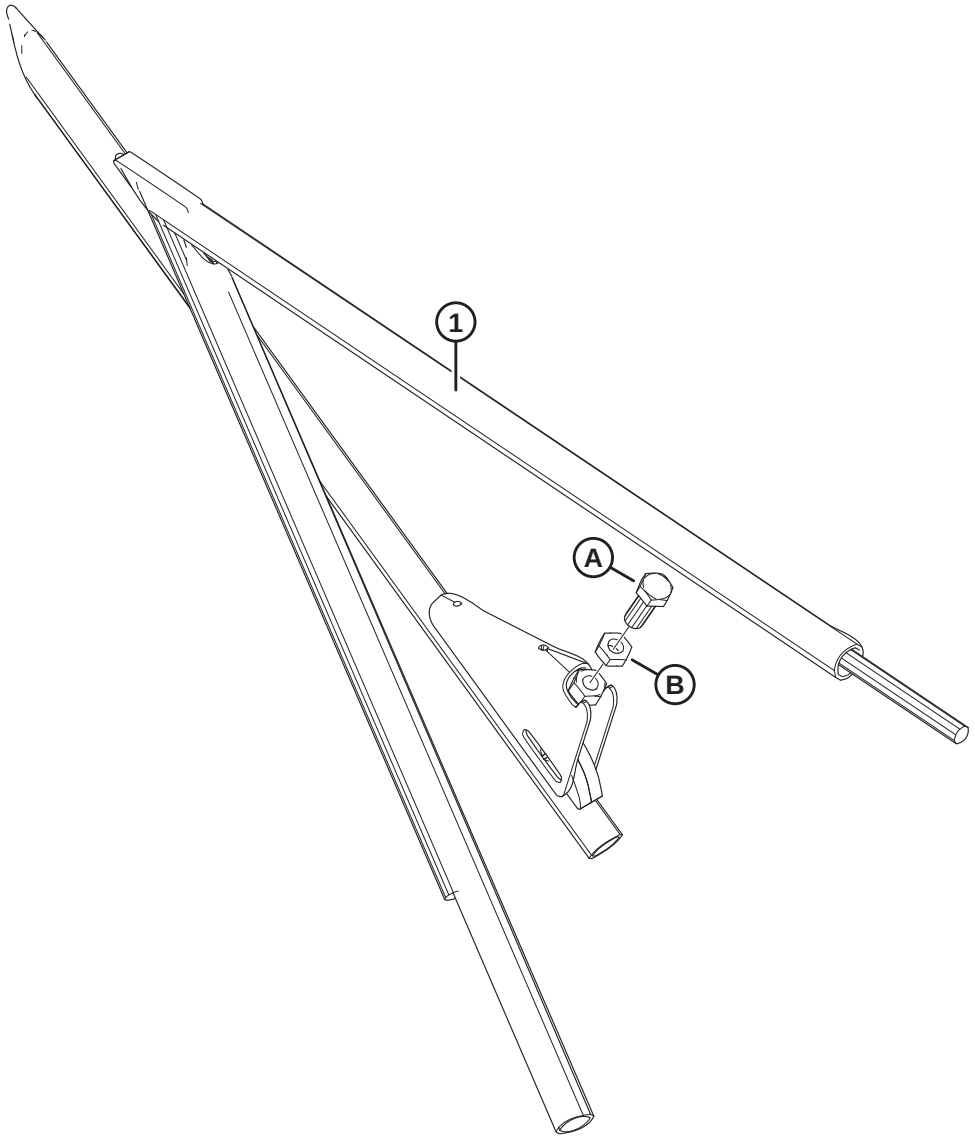

1035123

(OPTION) RICE DIVIDER RODS

Ref	Part Number	Description	Qty	Serial Number
	B5609	KIT – RICE DIVIDER RODS [196]		
1	123681	DIVIDER – RICE LH TUBE WELDT	1	
	123682	DIVIDER – RICE RH TUBE WELDT	1	
A	172875	SCREW – SET		
B	21056	NUT – HEX JAM 1/2-13 UNC GR 5 ZP		

196. Kits available through Whole Goods only.

58 (Option) Rock Retarder Kit

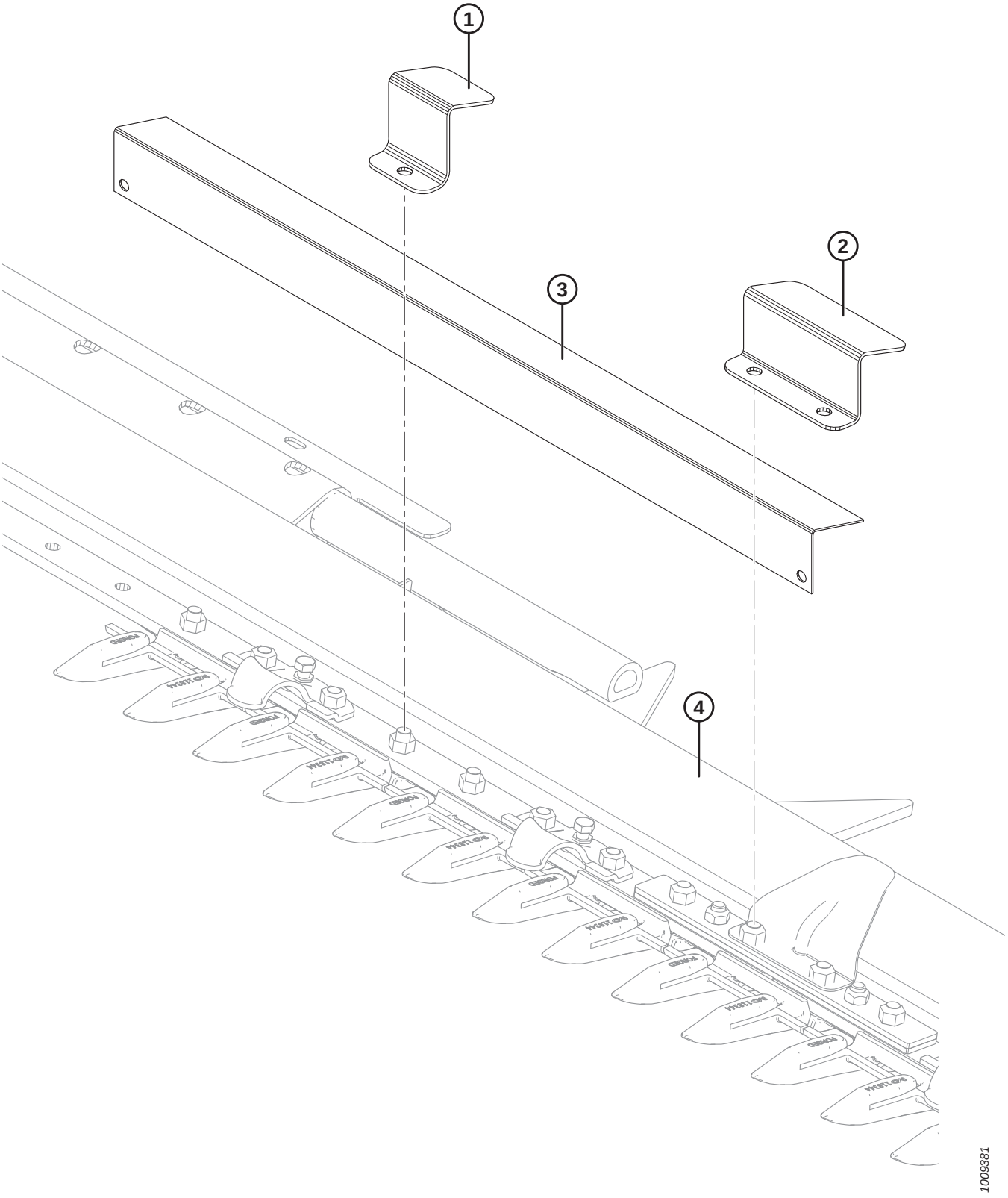

(OPTION) ROCK RETARDER KIT

Ref	Part Number	Description	Qty	Serial Number
	B5084	KIT – ROCK RETARDER (25–35 FT HEADER) [197]		
	B5085	KIT – ROCK RETARDER (40–45 FT HEADER) [197]		
1	129577	SUPPORT – ROCK RETARDER CLAMP [198]		
2	129578	SUPPORT – ROCK RETARDER CLAMP [199]	2	
3	129581	SUPPORT – ROCK RETARDER, 990 MM LONG	3	
	129582	SUPPORT – ROCK RETARDER, 913 MM LONG	4	
	129584	SUPPORT – ROCK RETARDER, 888 MM LONG	2	
	129589	SUPPORT – ROCK RETARDER, 1066 MM LONG	2	
4	REF	CUTTERBAR		

197. Kits available through Whole Goods only.
198. Quantities: 25–35 ft. = 32, 40–45 ft. = 40.
199. For use at flex joint.

59 (Option) Short Brace Kit for Center Reel Arm / Divider Latches

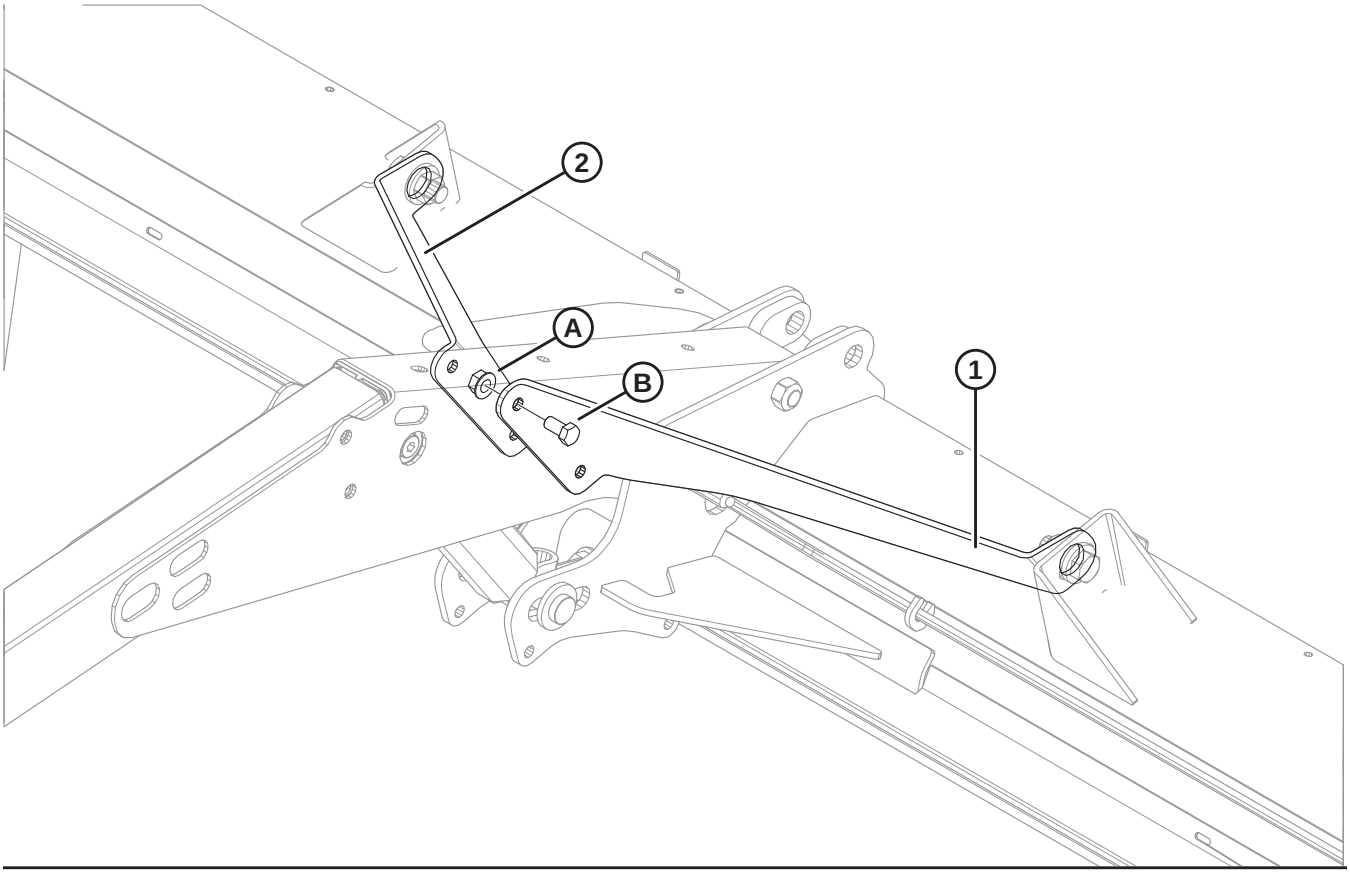

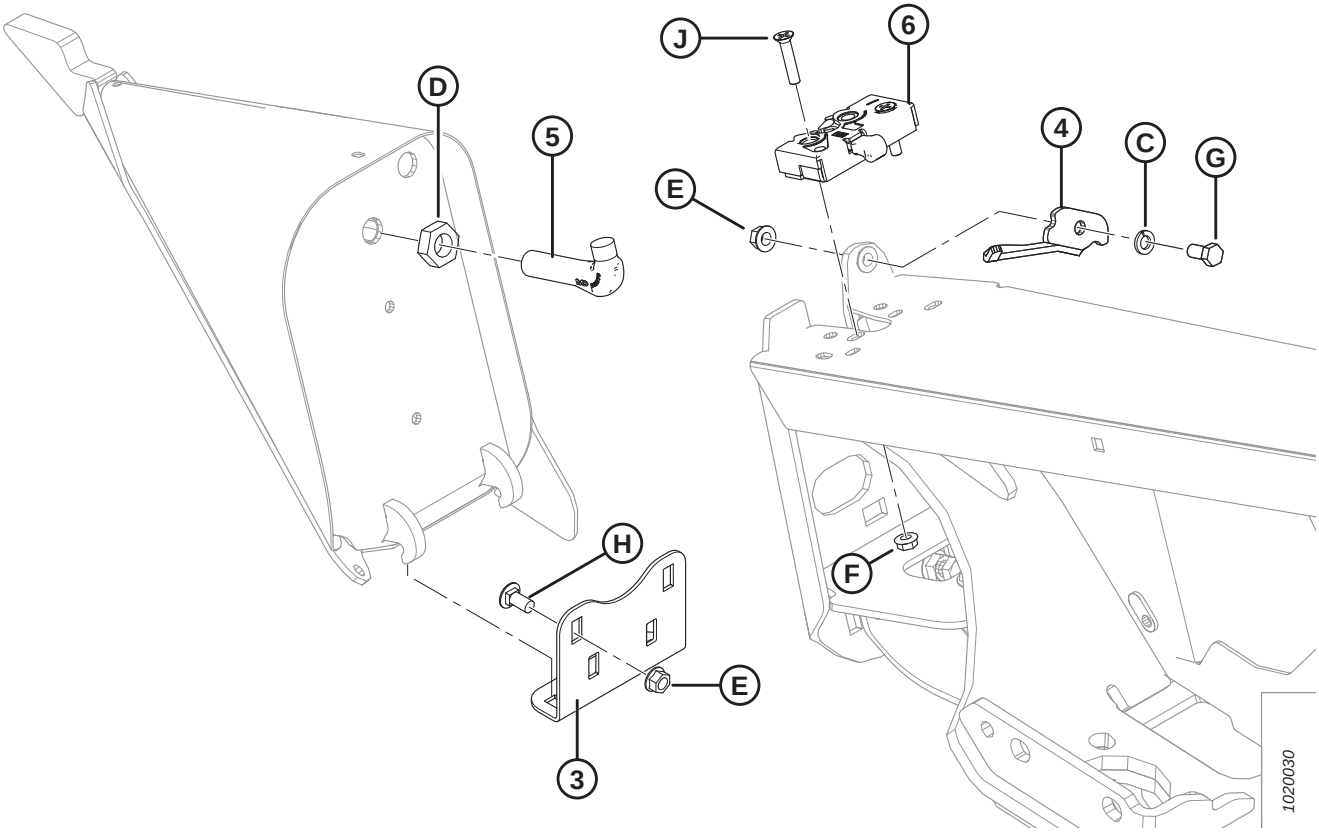

(OPTION) SHORT BRACE KIT FOR CENTER REEL ARM / DIVIDER LATCHES

Ref	Part Number	Description	Qty	Serial Number
	B5605	KIT – SHORT BRACE FOR CENTER REEL ARM [200]		
1	164825	BRACE – SHORT LH	1	
2	164800	BRACE – SHORT RH	1	
A	50186	NUT – FLANGE LOCK SM FACE DT 0.500-13 UNC GR 5		
B	21575	BOLT – HH 1/2 NC X 1.0 LG GR 5 ZP		
	B6158	KIT – DIVIDER LATCHES [200]		
3	255791	ANGLE – DIVIDER, STORAGE [201]	2	
4	132248	LATCH – LH, DIVIDER SAFETY	1	
	132253	LATCH – RH, DIVIDER SAFETY	1	
5	132773	HOOK – DIVIDER LATCH	2	
6	120932	LATCH – LH	1	
	120933	LATCH – RH	1	
C	18637	WASHER – REG. LOCK 3/8 IN. NOM. I.D. ZP		
D	7674	NUT – HEX JAM 3/4-16 UNF GR 5 ZP		
E	30228	NUT – FLANGE DT SMOOTH FACE 0.375-16 UNC		
F	30280	NUT – FLG SIDE LK SMTH FACE 5/16 NC GR 5 ZP		
G	21567	BOLT – HEX HD .375-16 UNC X 0.75 LG		
H	21863	BOLT – RHSSN 3/8 NC X 0.75 LG GR 5 ZP		
J	30504	SCREW – FLAT CSK MACH 5/16 NC X 1-1/2 LG GR 5 ZP		

200. Kits available through Whole Goods only.

201. Used to store divider on header endsheet when divider is not in use. For mounting position on header endsheet, refer to Section *1 Header Frame – Dividers and Stand, page 1*.

60 (Option) Short Brace Kit for Short Reel Arms – Single Reel

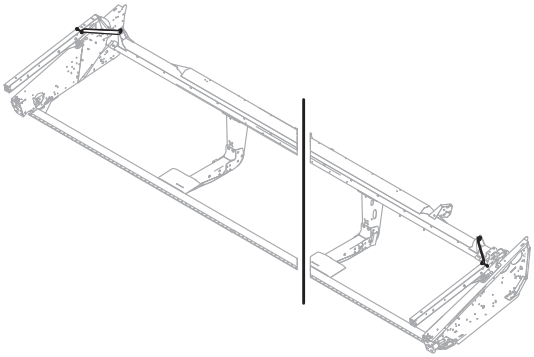

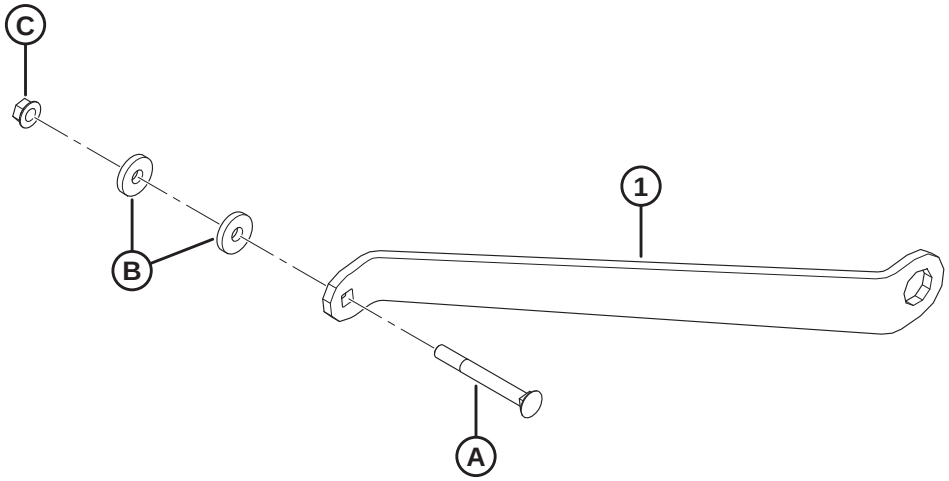

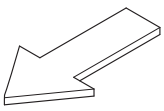

1021014

(OPTION) SHORT BRACE KIT FOR SHORT REEL ARMS – SINGLE REEL

Ref	Part Number	Description	Qty	Serial Number
	B6401	KIT – SINGLE REEL SHORT BRACE (EXPORT ONLY) [202]		
	255845	KIT – SINGLE REEL SHORT BRACES (EXPORT ONLY) [203]		
1	255831	BRACE – DIAGONAL SHORT	2	
A	129847	BOLT – RHSN 1/2 NC X 4.5 LG GR 5 ZP		
B	18770	WASHER – FLAT		
C	50186	NUT – FLG LOCK SMTH FACE DT 0.500-13 UNC GR 5		

202. Kit provides outer reel arm braces for single-reel headers equipped with short reel arms. Kit includes Single Reel Short Braces kit (MD #255845). Kits available through Whole Goods only.
203. Kit includes two diagonal short braces (MD #255831), two bolts (MD #129847), two washers (MD #18770), two nuts (MD #50186), and instructions.

61 (Option) Slow Speed Transport Package – Hitch Electrical

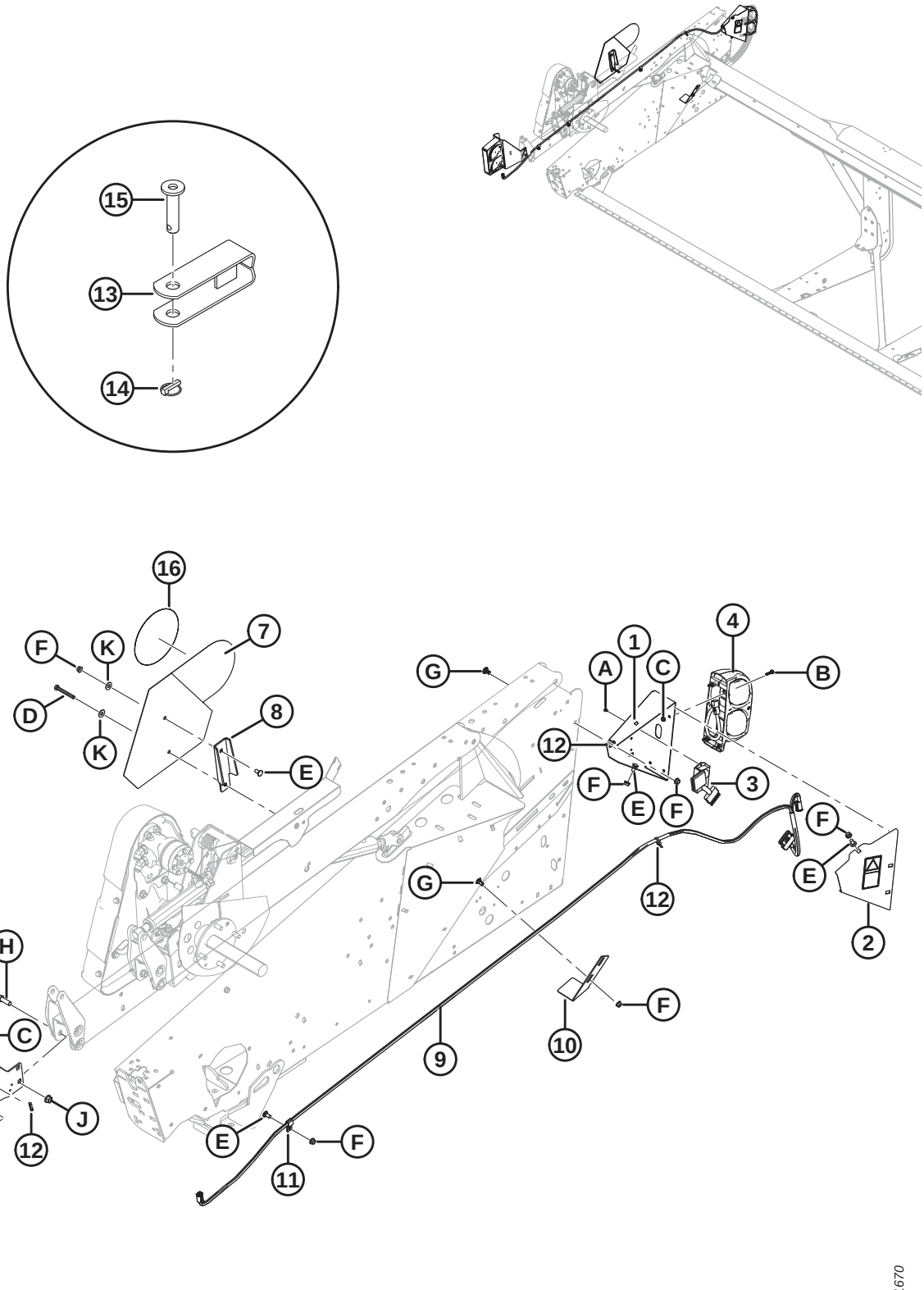

(OPTION) SLOW SPEED TRANSPORT PACKAGE – HITCH ELECTRICAL

Ref	Part Number	Description	Qty	Serial Number
	B6606	KIT – TRANSPORT LIGHTS AND HARNESS (NORTH AMERICA AND AUSTRALIA) [204]		
	B6607	KIT – TRANSPORT LIGHTS AND HARNESS (EUROPE) [204]		
1	244727	SUPPORT – LH TRANSPORT LIGHT	1	
2	274414	COVER – WITH SAFETY DECAL [205]	1	
3	171068	RELAY – TRANSPORT LIGHTING MODULE [206]	1	
4	138087	LAMP – STOP/TURN/TAIL [207]	1	
5	294392	SUPPORT – SST RH REAR LIGHT	1	
	115146	REFLECTOR – AMBER	A/R	
	115147	REFLECTOR – RED	A/R	
6	138086	LAMP – STOP/TURN/TAIL [207]	1	
	139630	LENS – AMBER	1	
	139631	LENS – RED	1	
	139632	LENS – BLACK (OPAQUE)	1	
	139633	LENS – CLEAR (RUSSIAN)	1	
7	258262	ASSY – BRACKET W/ SMV [208]	1	
	115148	DECAL – SMV [206]	1	
	258253	BRACKET – SPEED ID SYMBOL (EUROPE) [209]	A/R	
8	174926	BRACKET – SMV MOUNTING	1	
9	254175	HARNESS	1	
10	253500	SUPPORT – DIVIDER ROD LOWER	1	
11	135233	CLAMP – DOUBLE HOSE INSULATED	2	
12	21763	FASTENER – CABLE TIE (BLACK)	3	
13	113536	CLEVIS WELDT [206]	1	
14	113561	PIN – LYNCH [206]	1	
15	118239	PIN – HITCH [206]	1	
16	193241	DECAL – SIS, 30 KM/H	1	
	193243	DECAL – SIS, 30 KM/H (SMALL)	1	
	193242	DECAL – SIS, 20 MILE/H	1	
	193240	DECAL – SIS, 20 MILE/H (SMALL)	1	
A	136868	RIVET – BLIND		
B	21573	BOLT – HEX HD 1/4 NC X 1.0 LG GR 5 ZP		
C	21455	NUT – FLG (SER FACE) 1/4 NC GR 5 ZP		
D	21568	BOLT – HH 3/8 NC X 3.0 LG GR 5 ZP (SINGLE REEL)		
	21102	BOLT – HH 3/8 NC X 2.5 LG GR 5 ZP (DOUBLE REEL)		

204. Kits available through Whole Goods only.
205. Includes decal (MD #184422).
206. For B6606 only.
207. Turn, tail, and brake bulbs not sold by MacDon, but can be replaced with red (tail/brake) bulb - 1077, and amber (turn) bulb - 7506.
208. Includes SMV decal (MD #115148). For B6606 only.
209. For B6607 only.

(OPTION) SLOW SPEED TRANSPORT PACKAGE – HITCH ELECTRICAL

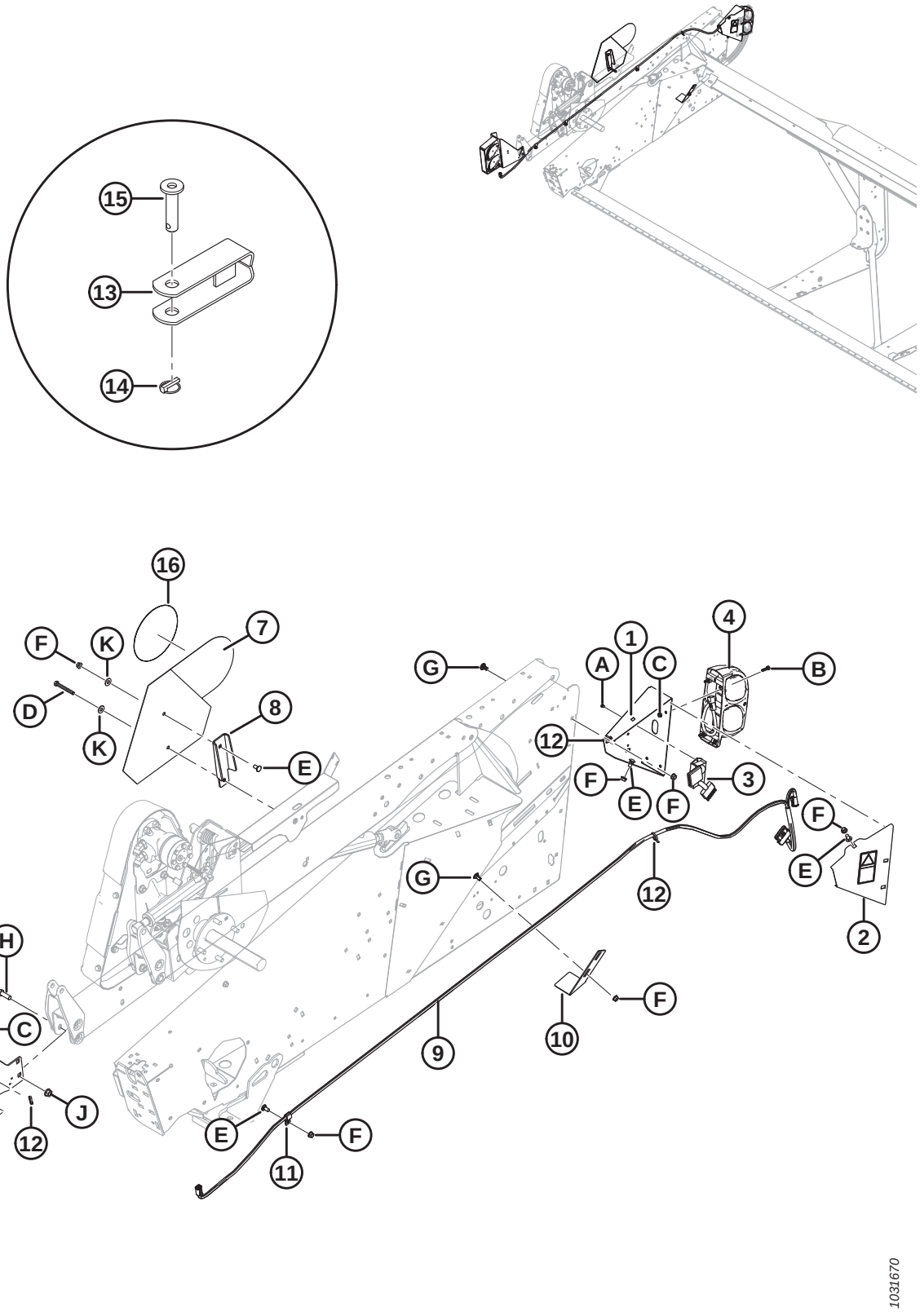

Ref	Part Number	Description	Qty	Serial Number
E	21863	BOLT – RHSSN 3/8 NC X 0.75 LG GR 5 ZP		
F	30228	NUT – FLANGE DT SMOOTH FACE 0.375-16 UNC		
G	21472	BOLT – RHSN 3/8 NC X 0.75 GR 5 ZP		
H	18723	BOLT – HH 1/2 NC X 1.5 LG TFL GR 5 ZP		
J	50186	NUT – FLG LOCK SM FACE DT 0.500-13 UNC GR 5		
K	18670	WASHER – FLAT SAE 7/16 I.D. X 1.0 IN. O.D. AA1J [210]		

210. For B6606 only.

62 (Option) Slow Speed Transport Package – Transport Hitch

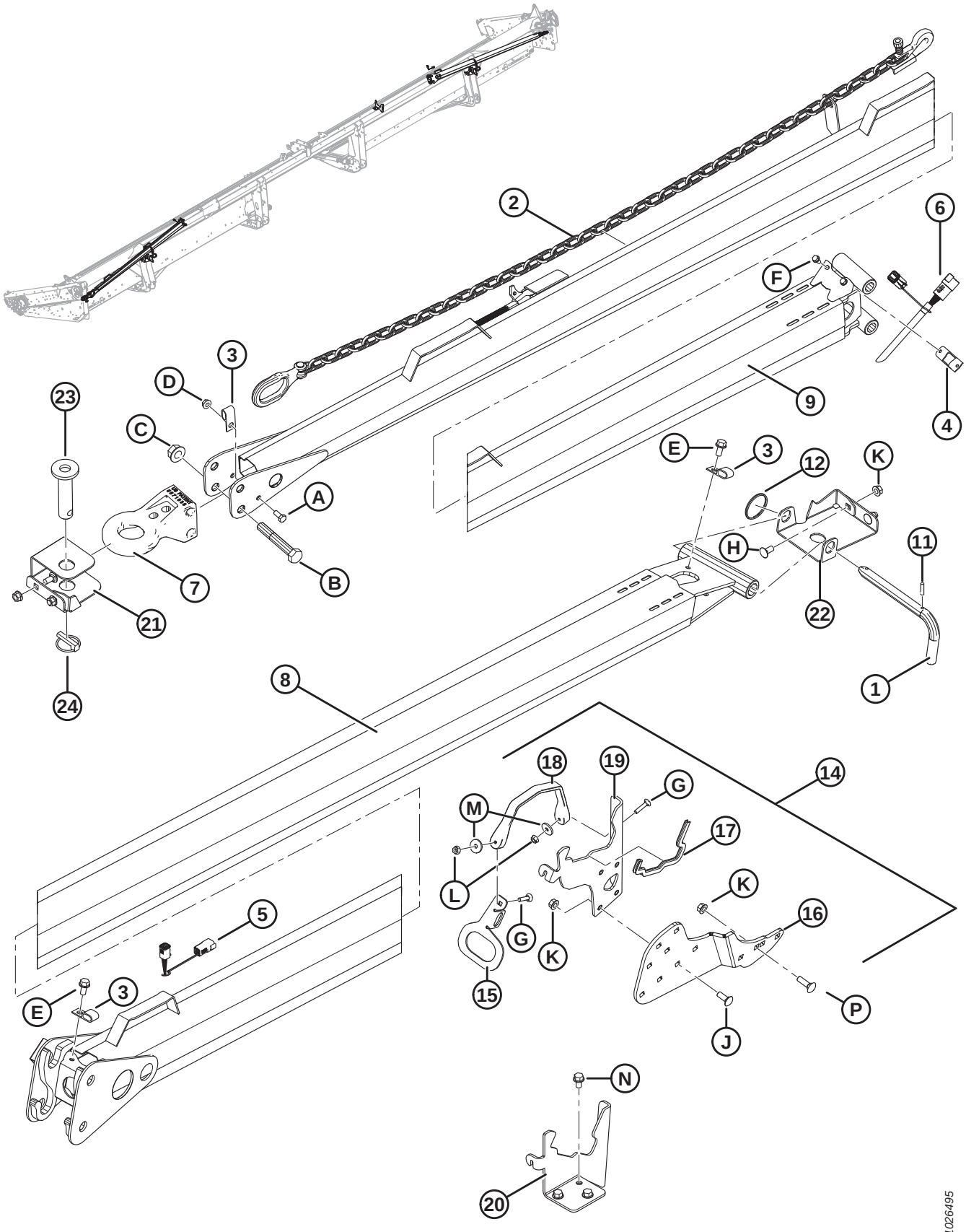

(OPTION) SLOW SPEED TRANSPORT PACKAGE – TRANSPORT HITCH

Ref	Part Number	Description	Qty	Serial Number
	B6145	KIT – TRANSPORT (TOW POLE) [211]		
1	144415	ASSY – L-PIN	1	
2	21404	CHAIN – SAFETY 59 LG	1	
3	39272	CLIP – INSULATED	2	
4	193057	CLIP – WIRING HARNESS DEUTSCH CONNECTOR	1	
5	193059	HARNESS – TRANSPORT HITCH (HEADER END)	1	
6	193058	HARNESS – TRANSPORT HITCH (TOW END)	1	
7	113566	HITCH BASE	1	
8	193202	HITCH – WELDT (HEADER END)	1	
9	193212	HITCH – C/W DECALS (TOW END) [212]	1	
11	16010	PIN – SPRING 3/16 DIA X 1.0 LG	1	
12	118137	RING	1	
14	294815	KIT – HITCH STORAGE ON HEADER	1	
15	193183	PLATE – LATCH HANDLE	2	
16	294807	ANGLE – SUPPORT	2	
17	135704	SEAL – EDGE TRIM	2	
18	193187	STRAP – RUBBER	2	
19	244760	SUPPORT – HITCH CRADLE	2	
20	220326	SUPPORT – HITCH CRADLE	1	
21	193188	SUPPORT – HITCH LH ENDSHEET	1	
22	279065	SUPPORT – HITCH RH ENDSHEET	1	
23	118239	PIN – HITCH	1	
24	113561	PIN – LYNCH	1	
A	21558	BOLT – HEX HD 5/16 NC X 0.75 LG GR 5 ZP		
B	19634	BOLT – HH 5/8 NC X 4.0 LG GR 5 ZP		
C	50225	NUT – FLANGE DT SMOOTH FACE .625-11 UNC		
D	30280	NUT – FLG SIDE LK SMTH FACE 5/16 NC GR 5 ZP		
E	101897	SCREW – HEX WASH HD THD ROLLING 3/8 NC X 3/4		
F	21055	SCREW – SELF TAP HEX WASH HD 1/4 NC X 1/2		
G	135623	BOLT – RHSN 1/4 NC X 1.25 LG GR 5 ZP		
H	21863	BOLT – RHSSN 3/8 NC X 0.75 LG GR 5 ZP		
J	100456	BOLT – RHSSN 3/8 NC X 1.0 GR 5 ZP		
K	30228	NUT – FLANGE DT SMOOTH FACE 0.375-16 UNC		
L	135248	NUT – FLG DT SMTH FACE 1/4-20 NC GR 5 ZP		
M	40628	WASHER – FLAT		
N	101898	SCREW – HEX WASH HD THD ROLLING 3/8 NC X 5/8		
P	19966	BOLT – RHSN 3/8-16 X 1.25 GR 5 ZP		

211. Kits available through Whole Goods only.
212. Includes decals (MD #220797, 220798).

63 (Option) Slow Speed Transport Package – Wheels and Supports

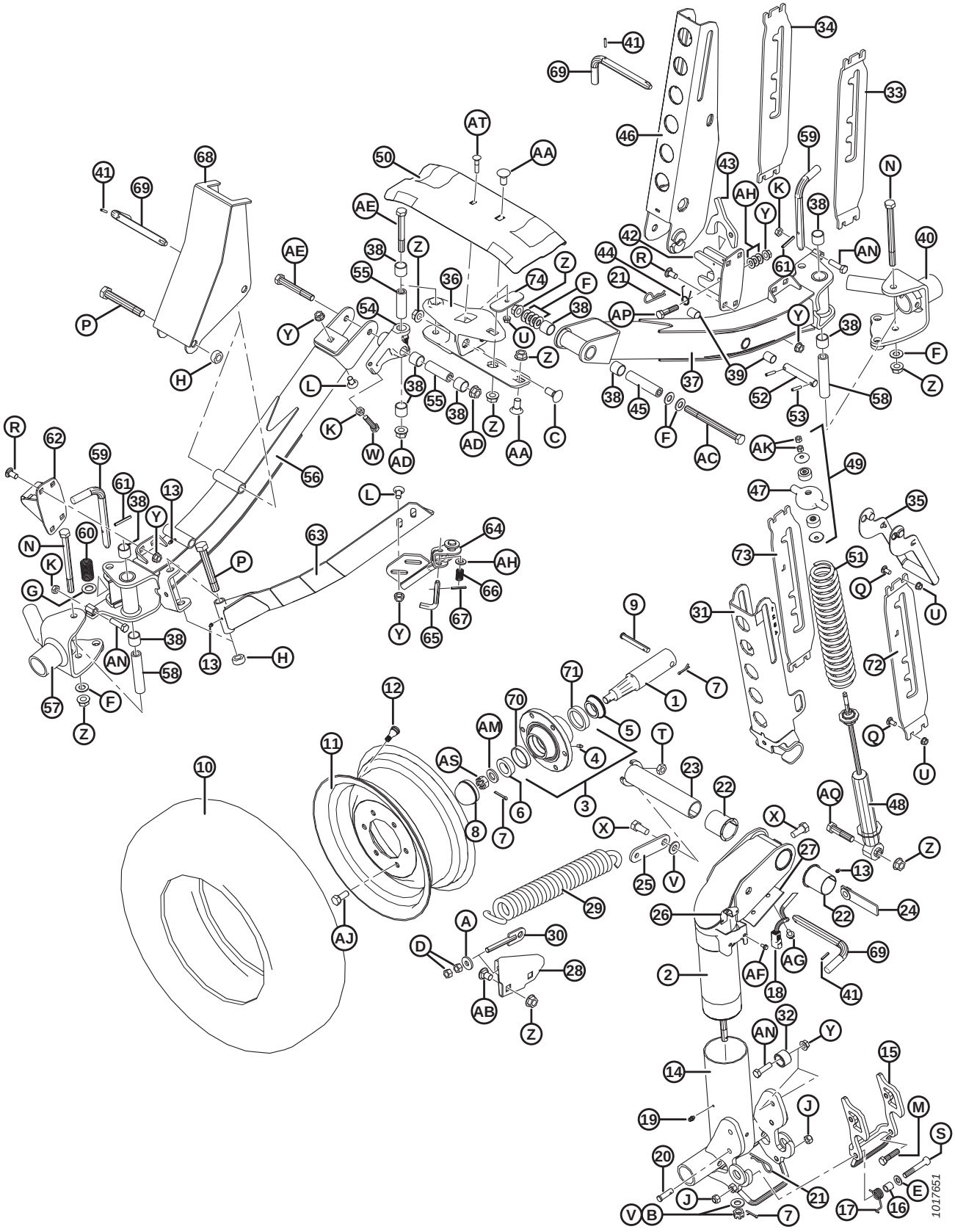

(OPTION) SLOW SPEED TRANSPORT PACKAGE – WHEELS AND SUPPORTS

Ref	Part Number	Description	Qty	Serial Number
	B5224	KIT – STABILIZER WHEELS [213]		
	B6449	KIT – TRANSPORT SUPPORTS AND HUBS [213]		
1	144378	SPINDLE	4	
2	244722	PIVOT WELDT	1	
3	41982	HUB – C/W BEARING CUPS [214]	4	
4	50174	FITTING – LUBE, DRIVE TYPE 1/4 IN. (CTD HUB)	4	
	21887	FITTING – LUBE, 1/8 NPT (ARMSTRONG HUB)	4	
5	30517	BEARING – CONE, C/W SEAL	4	
6	21376	BEARING – CONE ROLLER (NO SEAL)	4	
7	18648	PIN – COTTER 3/16 DIA X 1.25 ZP	7	
8	30520	CAP – DUST	4	
9	101007	PIN – CLEVIS	4	
10	193031	TIRE – ST 205/75 R15 STEEL BELTED RADIAL	4	
11	144531	WHEEL – 15 X 6 LB	4	
12	21153	STEM – TIRE VALVE ASSEMBLY #TR–415	4	
13	18671	FITTING – LUBE 1/4-28 UNF	5	
14	144971	SPINDLE WELDT	1	
15	144976	LATCH WELDT	1	
16	144742	SPACER – 3/4 IN. O.D. X .120 WALL X 19 LONG	1	
17	144741	SPRING – TORSION	1	
18	REF	HARNESS [215]		
19	21010	FITTING – LUBE 90° 1/4-28 TAPER THD	2	
20	19927	PIN – CLEVIS	1	
21	13125	PIN – HAIR	1	
22	35694	BUSHING – PLASTIC	2	
23	144374	PIN – WELDT	1	
24	144577	BAR – NUT ASSY	1	
25	144471	BAR	1	
26	193057	CLIP – WIRING HARNESS DEUTSCH CONNECTOR	1	
27	144739	HOLDER	1	
28	144873	SUPPORT – WELDT	1	
29	144724	SPRING – EXTENSION	1	
30	144425	BOLT – EYE WELDT	1	
31	144968	CHANNEL WELDT	1	
32	193008	ROLLER	2	
33	193214	SUPPORT – LH (USED RIGHT SIDE OF HEADER)	1	
34	193215	SUPPORT – RH (USED RIGHT SIDE OF HEADER)	1	
35	144899	HANDLE – WELDT	2	
36	125256	SUPPORT – WELDT	1	

213. Kits available through Whole Goods only.
214. Includes lube fitting (MD #50174), bearing cup (MD #7900), and bearing cup (MD #30516).
215. Refer to Section *61 (Option) Slow Speed Transport Package – Hitch Electrical, page 183*.

(OPTION) SLOW SPEED TRANSPORT PACKAGE – WHEELS AND SUPPORTS

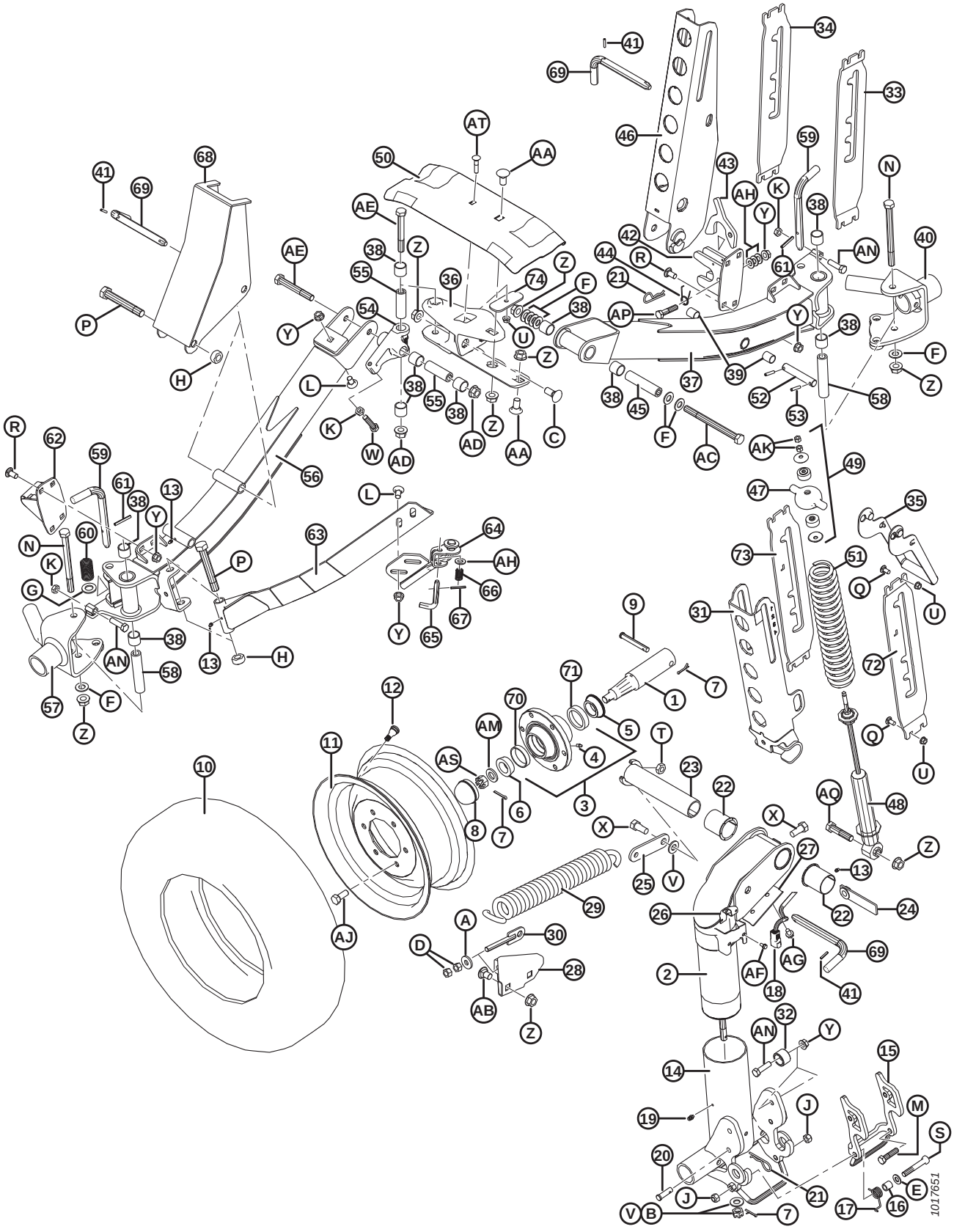

(OPTION) SLOW SPEED TRANSPORT PACKAGE – WHEELS AND SUPPORTS

Ref	Part Number	Description	Qty	Serial Number
37	294094	TUBE – AXLE, C/W BUSHINGS [216]	1	
38	133992	BUSHING – COMPOSITE	10	
39	156501	BUSHING – PLASTIC	2	
40	294036	PIVOT – LH WELDT	1	
41	16010	PIN – SPRING 3/16 DIA X 1.0 LG	3	
42	193009	LATCH – WELDT	1	
43	193016	LATCH	1	
44	144505	SPRING – TORSION	1	
45	144880	SPACER	1	
46	144956	CHANNEL WELDT	1	
47	144966	CASTING – SPRING CAP	2	
48	144934	SHOCK – TENNECO [217]	2	
49	174922	KIT – SHOCK MOUNTING	2	
50	220099	SUPPORT – DRAPER, TRANSPORT	1	
51	144962	SPRING – COMPRESSION	2	
52	144376	PIN – STRAIGHT	1	
53	16266	PIN – SPRING 1/4 DIA X 1.25 LG	2	
54	244748	PIVOT – ASSY W/ BUSHINGS [218]	1	
55	244671	SPACER	2	
56	294091	AXLE – ASSY, C/W BUSHINGS [218]	1	
57	294037	PIVOT – RH WELDT	1	
58	193022	SPACER	2	
59	144989	L-PIN	2	
60	29028	SPRING – COMPRESSION	2	
61	2148	PIN – SPRING 1/4 DIA X 2.0 LG	2	
62	193014	LATCH WELDT	1	
63	144324	BRACE – ANGLE WELDT	1	
64	144433	LATCH WELDT	1	
65	144409	L-PIN	1	
66	35618	SPRING – COMPRESSION	1	
67	7642	PIN – SPRING 3/16 DIA X 1.5 LG	1	
68	144321	SUPPORT – C'BAR WELDT	1	
69	144415	ASSY – L-PIN	3	
70	7900	CUP – ROLLER BEARING	4	
71	30516	CUP – ROLLER BEARING	4	
72	193216	SUPPORT – LH (USED LEFT SIDE OF HEADER)	1	
73	193217	SUPPORT – RH (USED LEFT SIDE OF HEADER)	1	
74	125236	BAR – DRAPER SUPPORT RETENTION	1	
A	4761	WASHER – FLAT		
B	6649	NUT – SLOTTED HEX 0.625 IN. NC ZN PL		

216. Includes composite bushing (MD #133992) and plastic bushing (MD #156501).
217. Includes shock mounting kit (MD #174922).
218. Includes composite bushing (MD #133992) and hardware (MD #21056, 30833).

(OPTION) SLOW SPEED TRANSPORT PACKAGE – WHEELS AND SUPPORTS

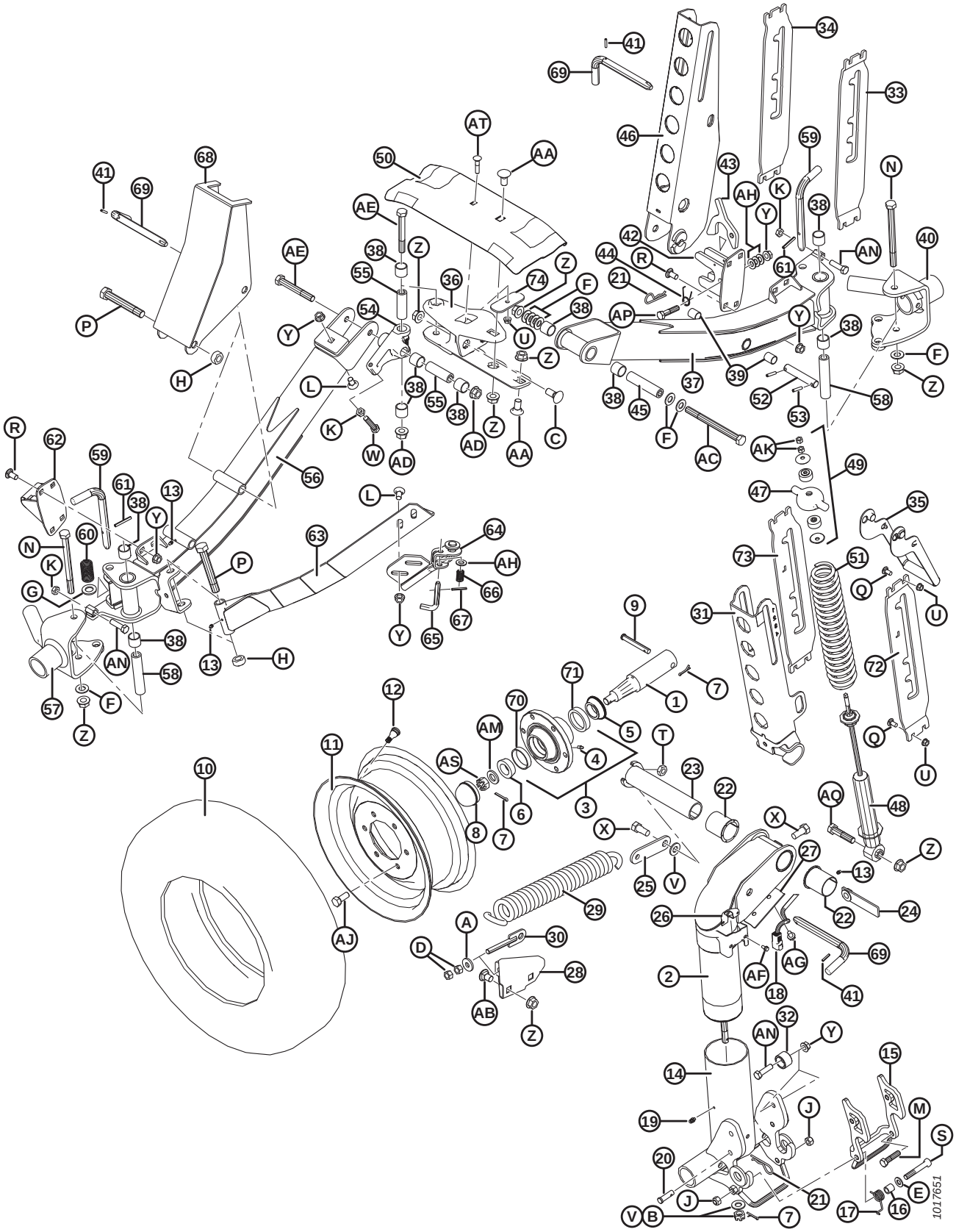

(OPTION) SLOW SPEED TRANSPORT PACKAGE – WHEELS AND SUPPORTS

Ref	Part Number	Description	Qty	Serial Number
C	18523	BOLT – RHSN 5/8 NC X 1.5 GR 5 ZP		
D	18591	NUT – HEX 1/2-13 UNC GR 5 ZP		
E	18599	WASHER – SAE FLAT 17/32 I.D. X 1-1/16 IN. O.D. ZP		
F	18600	WASHER – SAE FLAT 21/32 I.D. X 1-5/16 IN. O.D. ZP		
G	18601	WASHER – SAE FLAT 13/16 I.D. X 1.5 IN. O.D. ZP		
H	102636	NUT – HEX, SIDE LOCK DT .750-10 UNC		
J	18697	NUT – HEX LOCK DT .500-13 UNC		
K	21056	NUT – HEX JAM 1/2-13 UNC GR 5 ZP		
L	21066	BOLT – RHSN 1/2 NC X 1 GR 5 ZP		
M	21576	BOLT – HH 1/2 NC X 2.0 LG GR 5 ZP		
N	21591	BOLT – HH 5/8 NC X 7.5 LG GR 5 ZP		
P	21599	BOLT – HH 3/4 NC X 5.0 LG GR 5 ZP		
Q	100456	BOLT – RHSSN 3/8 NC X 1.0 GR 5 ZP		
R	21868	BOLT – RHSSN 1/2 NC X 1.0 GR 5 ZP		
S	21560	BOLT – HH 1/2 NC X 3.0 LG GR 5 ZP		
T	21941	NUT – HEX LOCK JAM (DT) 5/8-11 UNC GR 5 ZP		
U	30228	NUT – FLANGE DT SMOOTH FACE 0.375-16 UNC		
V	30441	WASHER – HARDENED		
W	30833	BOLT – HH 1/2 NC X 2.25 TFL GR 5 ZP		
X	48050	BOLT – SHOULDER .625-11 UNC		
Y	50186	NUT – FLANGE LOCK SM FACE DT 0.500-13 UNC GR 5		
Z	50225	NUT – FLANGE DT SMOOTH FACE .625-11 UNC		
AA	103562	BOLT – RHSN 5/8 NC X 1.25 GR 5 ZP		
AB	117015	BOLT – RHSSN 5/8 NC X 1.0 GR 5 ZP		
AC	193211	BOLT – HEX HEAD 5/8 NC X 7.5 LG GR 8 ZP		
AD	188467	NUT – FLANGE DT SMOOTH FACE .625-18 UNC GR. G		
AE	252305	BOLT – HH FINE 5/8-18 X 4.5 GR 8 ZP		
AF	21055	SCREW – SELF TAP HEX WASH HD 1/4 NC X 1/2		
AG	101898	SCREW – HEX WASH HD THD ROLLING 3/8 NC X 5/8		
AH	18599	WASHER – SAE FLAT 17/32 I.D. X 1-1/16 IN. O.D. ZP		
AJ	18916	BOLT – 90° WHEEL 9/16 NF X 1.75 OL		
AK	18866	NUT – HEX 3/8-24 UNF GR 5 ZP		
AM	21540	WASHER – HARDENED		
AN	50072	BOLT – HH 1/2 NC X 1.75 LG TFL GR 5 ZP		
AP	21578	BOLT – HH 1/2 NC X 2.25 LG GR 5 ZP		
AQ	30922	BOLT – HH 5/8 NC X 2.75 GR 5 ZP		
AS	5512	NUT – HEX SLOTTED .750-16 UNF ZN PL		
AT	50197	BOLT – RHSN 3/8 NC x 1.75 LG GR 5 ZP		

64 (Option) Stabilizer Wheels

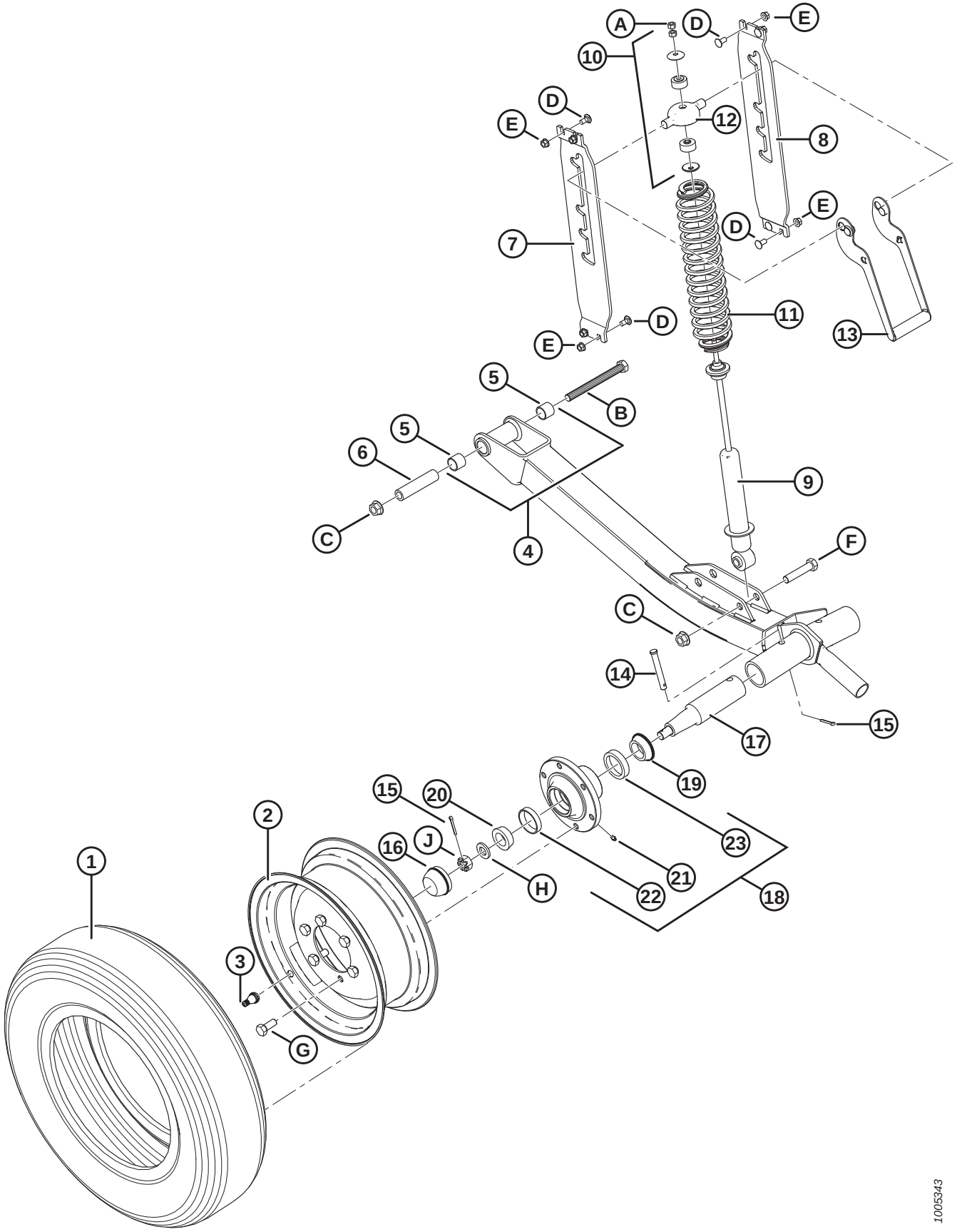

(OPTION) STABILIZER WHEELS

Ref	Part Number	Description	Qty	Serial Number
	C1986	KIT – STABILIZER WHEELS (30–45 FT ONLY) [219]		
1	193031	TIRE – ST 205/75 R15 STEEL BELTED RADIAL	2	
2	144531	WHEEL – 15 X 6 LB	2	
3	21153	STEM – TIRE VALVE ASSEMBLY #TR–415	2	
4	144860	TUBE – AXLE, C/W BUSHINGS [220]	2	
5	133992	BUSHING – COMPOSITE	4	
6	144880	SPACER	2	
7	193214	SUPPORT – LH	2	
8	193215	SUPPORT – RH	2	
9	144934	SHOCK – TENNECO	2	
10	174922	KIT – SHOCK MOUNTING	2	
11	144935	SPRING – COMPRESSION	2	
12	144966	CASTING – SPRING CAP	2	
13	144899	HANDLE – WELDT	2	
14	101007	PIN – CLEVIS	2	
15	18648	PIN – COTTER 3/16 DIA X 1.25 ZP	2	
16	30520	CAP – DUST	2	
17	144378	SPINDLE	2	
18	41982	HUB – C/W BEARING CUPS [221]	2	
19	30517	BEARING – CONE, INNER W/ SEAL	2	
20	21376	BEARING – CONE, OUTER	2	
21	50174	FITTING – LUBRICATION DRIVE TYPE 1/4 IN. (CTD HUB)	2	
	21887	FITTING – LUBE, 1/8 NPT (ARMSTRONG HUB)	2	
22	7900	BEARING – CUP, OUTER	2	
23	30516	BEARING – CUP, INNER	2	
A	18866	NUT – HEX 3/8-24 UNF GR 5 ZP		
B	21577	BOLT – HH 5/8 NC X 6.5 LG GR 5 ZP		
C	50225	NUT – FLANGE DT SMOOTH FACE 5/8-11 UNC		
D	21863	BOLT – RHSSN 3/8 NC X 0.75 LG GR 5 ZP		
E	30228	NUT – FLANGE DT SMOOTH FACE 3/8-16 UNC		
F	21583	BOLT – HH 5/8 NC X 3.0 LG GR 5 ZP		
G	18916	BOLT – 90° WHEEL 9/16 NF X 1.75 OL		
H	21540	WASHER – HARDENED		
J	5512	NUT – HEX SLOTTED .750-16 UNF ZN PL		

219. Kits available through Whole Goods only.
220. Includes two bushings (MD #133992).
221. Includes lube fitting (MD #50174 or 21887) and bearings (MD #7900, 30516).

65 (Option) Stabilizer Wheels – Secondary

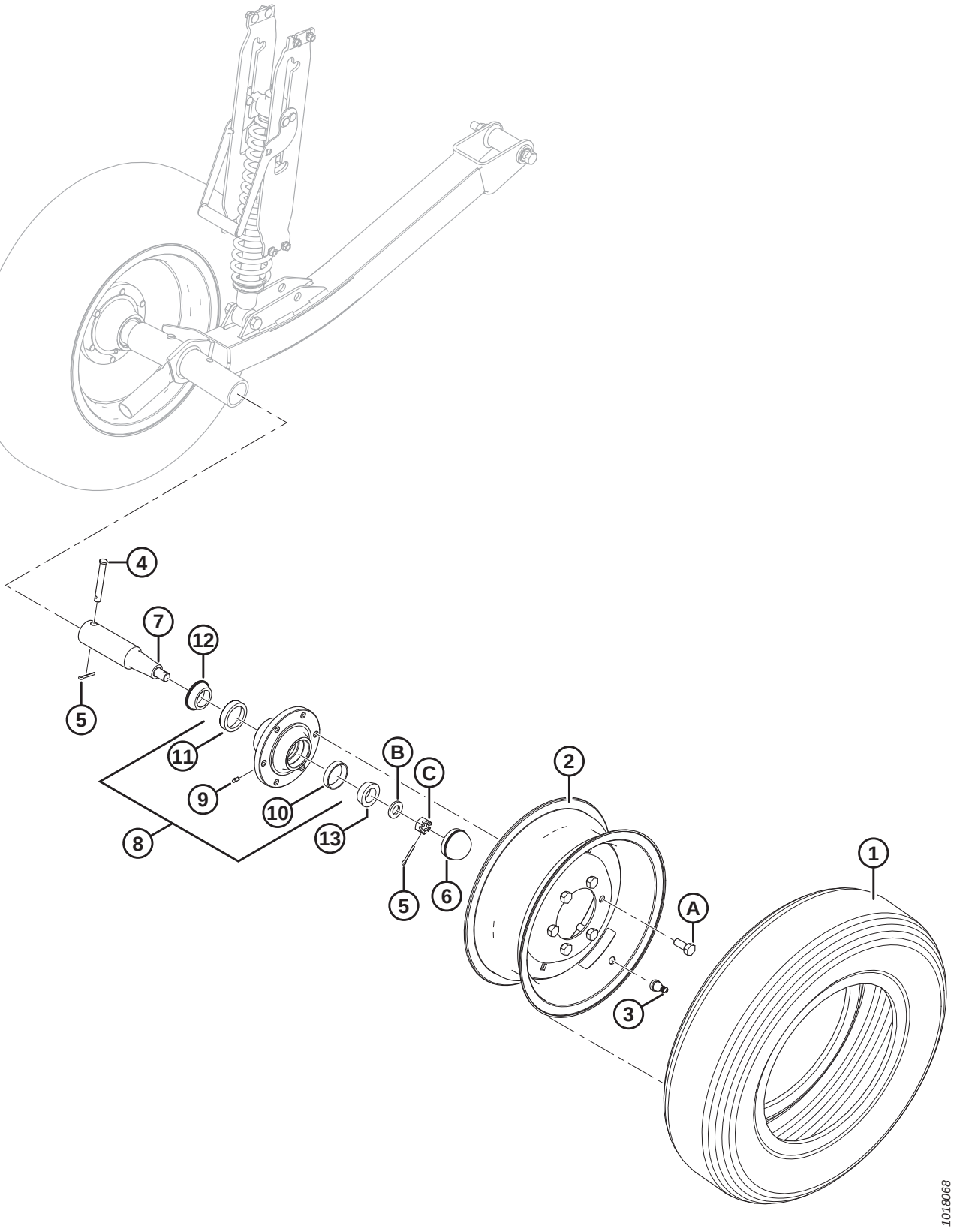

(OPTION) STABILIZER WHEELS – SECONDARY

Ref	Part Number	Description	Qty	Serial Number
	B6179	KIT – SECOND STABILIZER WHEEL [222]		
1	193031	TIRE – ST 205/75 R15 STEEL BELTED RADIAL	1	
2	144531	WHEEL – 15 X 6 LB	1	
3	21153	STEM – TIRE VALVE ASSEMBLY #TR-415	1	
4	101007	PIN – CLEVIS	1	
5	18648	PIN – COTTER 3/16 DIA X 1.25 ZP	2	
6	30520	CAP – DUST	1	
7	144378	SPINDLE	1	
8	41982	HUB – C/W BEARING CUPS [223]	1	
9	50174	FITTING – LUBRICATION DRIVE TYPE 1/4 IN. (CTD HUB)	1	
	21887	FITTING – LUBE, 1/8 NPT (ARMSTRONG HUB)	1	
10	7900	BEARING – CUP, OUTER	1	
11	30516	BEARING – CUP, INNER	1	
12	30517	BEARING – CONE, INNER W/ SEAL	1	
13	21376	BEARING – CONE, OUTER	1	
A	18916	BOLT – 90° WHEEL 9/16 NF X 1.75 OL		
B	21540	WASHER – HARD ASTM F436 M20-340HV-AB2C		
C	5512	NUT – HEX SLOTTED .750-16 UNF ZN PL		

222. Kits available through Whole Goods only.
223. Includes lube fitting (MD #50174 or 21887) and bearing cups (MD #7900, 30516).

66 (Option) Stub Guard Conversion Kit

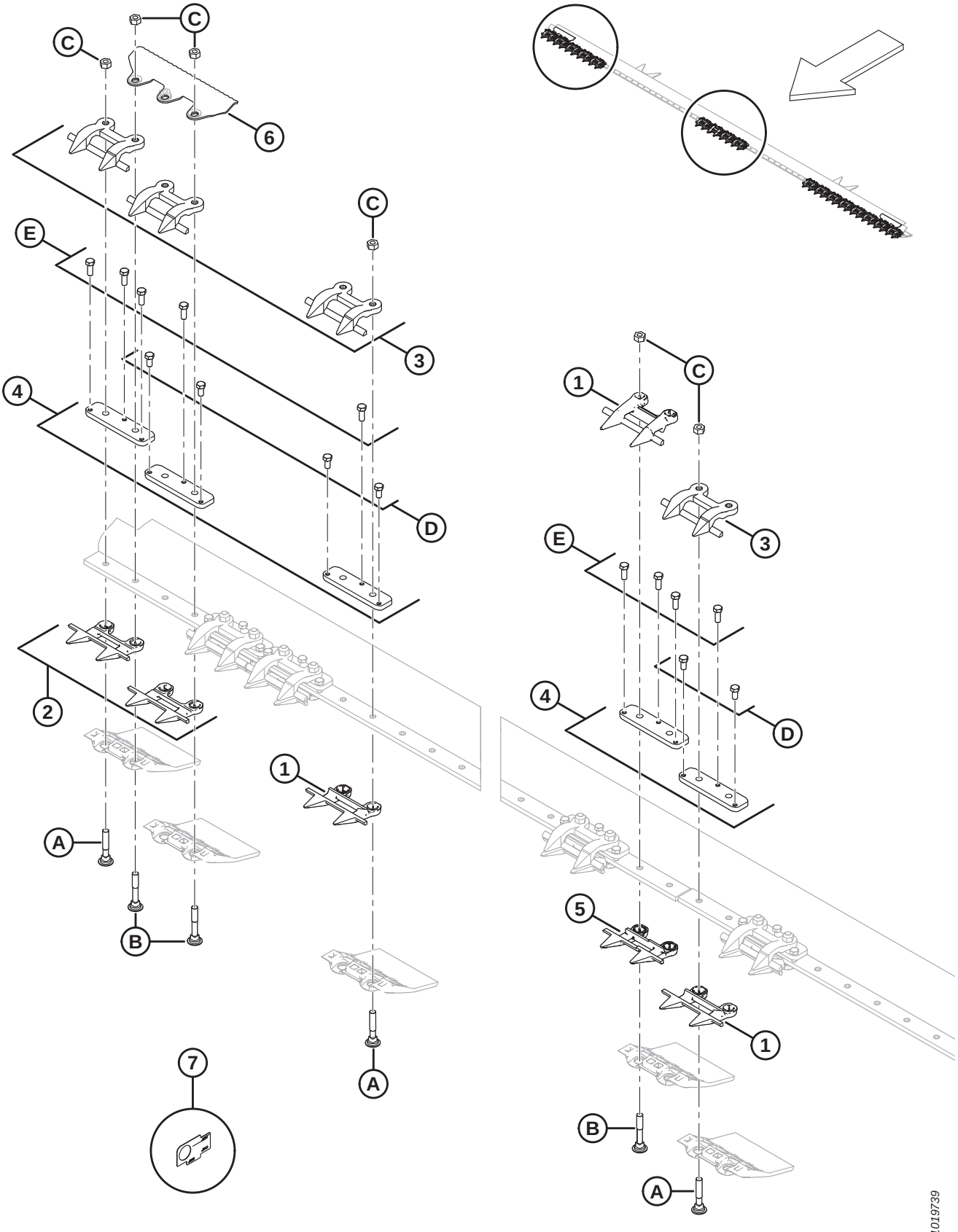

(OPTION) STUB GUARD CONVERSION KIT

NOTE:

Illustration; Right end and middle shown (left end is similar). Double knife, stub guards only.

Ref	Part Number	Description	Qty	Serial Number
	B5010	KIT – STUB GUARD CONVERSION (D120X HEADER) [224]		
	B5011	KIT – STUB GUARD CONVERSION (D125X HEADER) [224]		
	B5012	KIT – STUB GUARD CONVERSION (30 FT HEADER) [224]		
	B5013	KIT – STUB GUARD CONVERSION (35 FT HEADER) [224]		
1	118346	SICKLE GUARD [225]		
2	118347	SICKLE GUARD – STUB, W/O WEARBAR (4 PER END)	8	
3	34359	GUIDE [226]		
4	34980	BAR – ADJUSTER [226]		
5	124775	SICKLE GUARD – CENTER, STUB	1	
6	132405	RETAINER – DEFLECTOR	2	
7	NSS	TOOL – STUB GAUGE	1	
A	279575	BOLT – RHSN 7/16-14 X 2.5-GR5-ZP		
B	132404	BOLT – RHSN SPECIAL 7/16 NC X 2.75 LG GR 5 ZP		
C	18654	NUT – HEX 7/16-14 UNC GR 5 ZP		
D	50119	BOLT – HH 3/8 NC X 0.75 STAIN STL		
E	50120	BOLT – HH 3/8 NC X 1 STAIN STL		

224. Kits available through Whole Goods only.
225. Complete cutterbar quantities: 15 ft. = 22, 20 ft. = 36, 25 ft. = 46, 30 ft. = 56, 35 ft. = 66.
226. Complete cutterbar quantities: 15 ft. = 30, 20 ft. = 40, 25 ft. = 50, 30 ft. = 60, 35 ft. = 70.

67 (Option) Stubble Lights

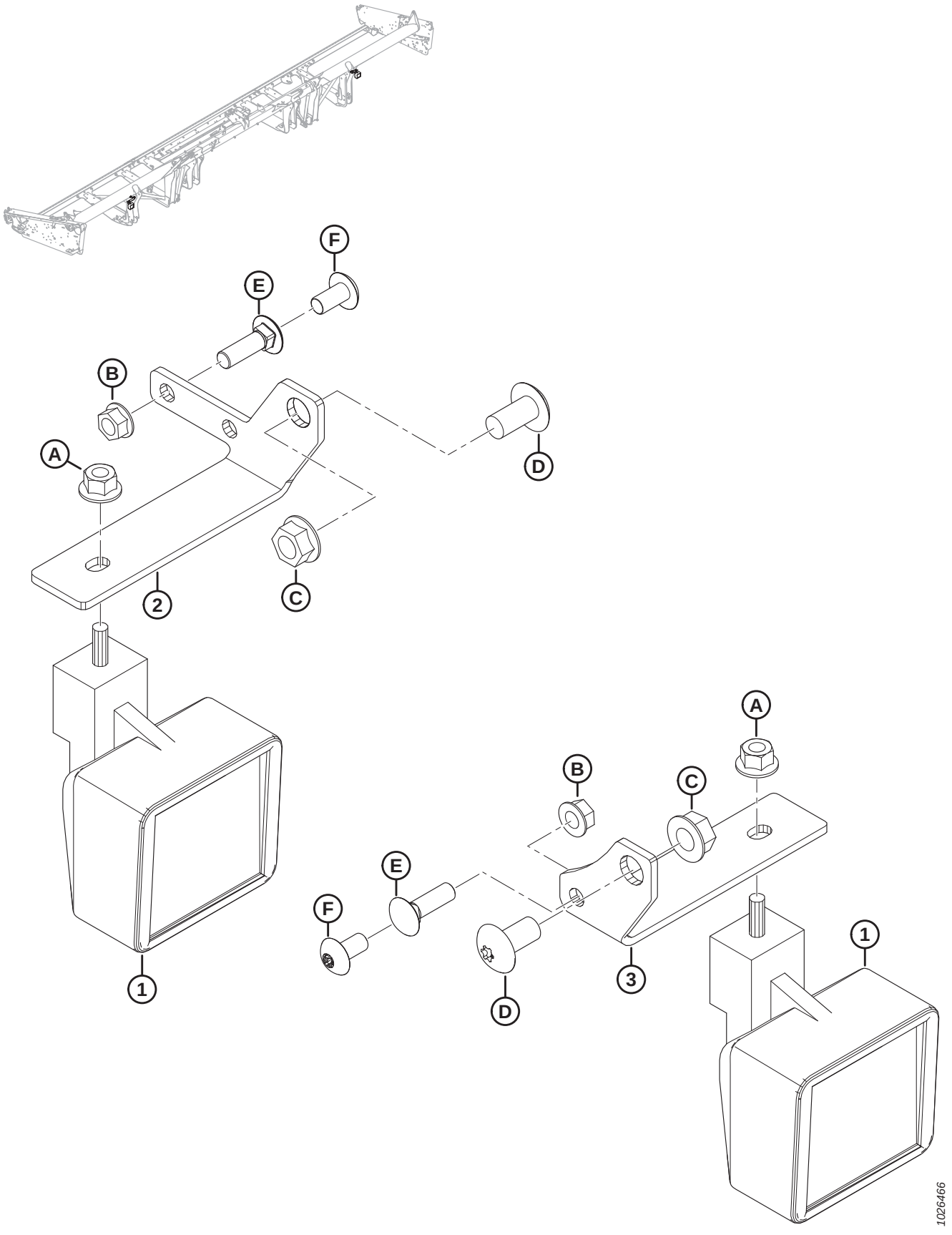

(OPTION) STUBBLE LIGHTS

Ref	Part Number	Description	Qty	Serial Number
	B6634	KIT – STUBBLE LIGHT 30-45 FT JD [227]		
1	109717	LIGHT – WORK	2	
2	304021	SUPPORT – LH STUBBLE LIGHT	1	
3	245450	SUPPORT – RH STUBBLE LIGHT	1	
A	50101	NUT – HEX FLG STVR LOC M10 X 1.5-10-AA1J		
B	30228	NUT – FLG DT SMTH FACE 3/8 NC-GR5-AA1J		
C	50186	NUT – FLG LK SM FACE DT 1/2-13 UNC-GR5-AA1J		
D	105136	SCREW – MACHINE		
E	19966	BOLT – RHSN 3/8-16 X 1.25-GR5-AA1J [228]		
F	135157	SCREW – MACHINE [229]		

227. Used with John Deere combines only. Kits available through Whole Goods only.
228. Bolt used when mounting with slow speed transport installed.
229. Screw used when the support is mounted to header leg. No slow speed transport installed.

68 (Option) Sunflower Attachment – Base Kit

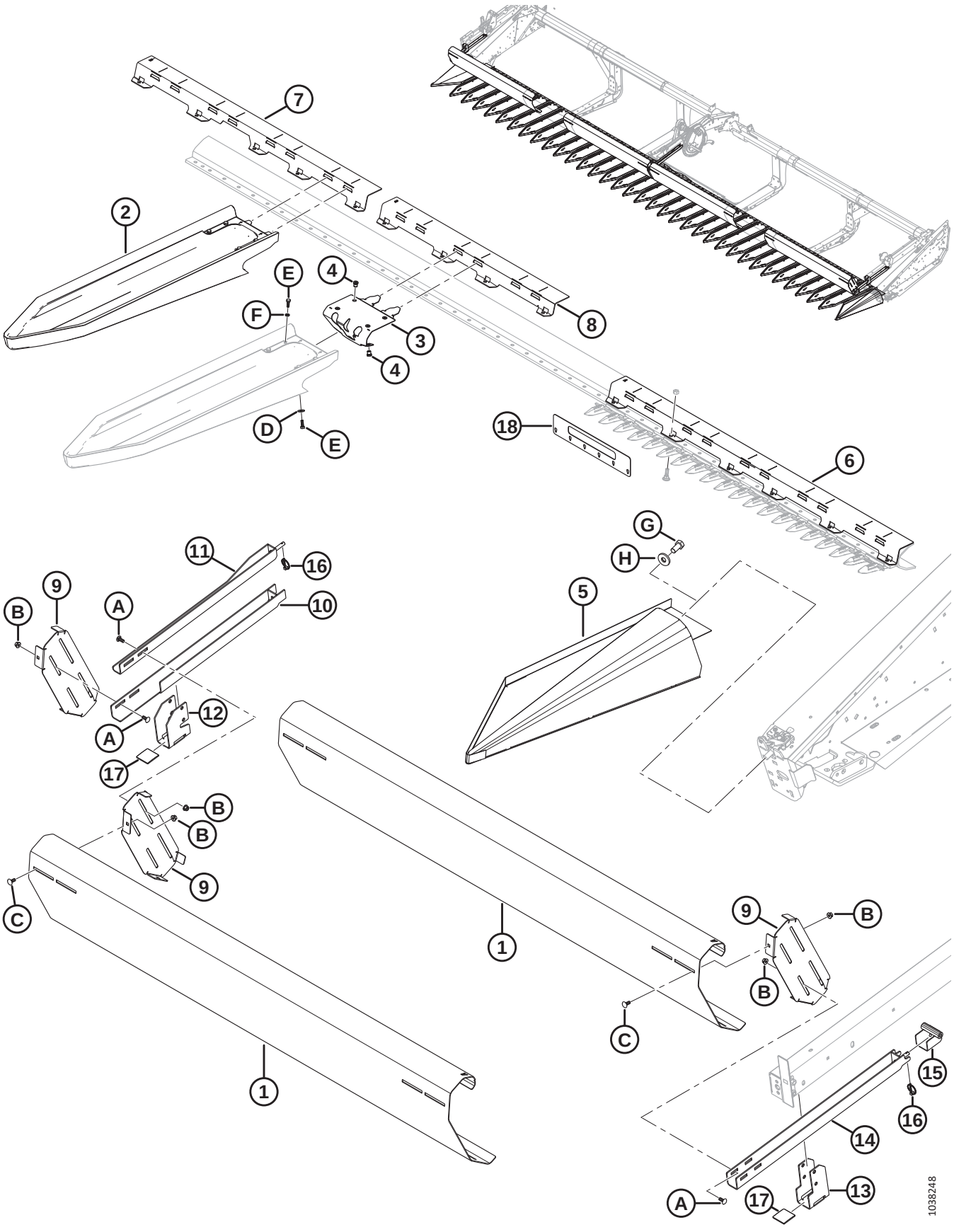

(OPTION) SUNFLOWER ATTACHMENT – BASE KIT

Ref	Part Number	Description	Qty	Serial Number
	C2082	KIT – 30 FOOT SUNFLOWER ATTACHMENT [230]		
	C2083	KIT – 35 FOOT SUNFLOWER ATTACHMENT [230]		
	C2084	KIT – 40 FOOT SUNFLOWER ATTACHMENT [230]		
	C2085	KIT – 45 FOOT SUNFLOWER ATTACHMENT [230]		
	B7269	KIT – SUNFLOWER ATTACHMENT BASE [231]		
1	119530	DEFLECTOR – LEAN BAR A [232]		
2	**119722**	**PAN – QUICK ATTACH** [233]		
3	119723	ASSEMBLY – PAN LATCH [234]		
4	252179	RIVNUT – M8 X 1.25 HEX 0.7-3.8 [235]		
5	119392	PAN – END LH WELDT	1	
	119442	PAN – END RH WELDT	1	
6	119415	SUPPORT – PAN 5 FT A [236]		
7	119460	SUPPORT – PAN 4 FT B [237]		
8	119457	SUPPORT – PAN 3 FT C [238]		
9	119384	BRACKET – LEAN BAR MOUNT	4	
10	119285	SUPPORT – LEAN BAR [239]	1	
11	119284	BRACKET – LEAN BAR MOUNT WELDT [239]	1	
12	119282	SUPPORT – LEAN BAR [239]	1	
13	119728	SUPPORT – LEAN BAR [240]	2	
14	**119729**	**BRACKET – LEAN BAR MOUNT WELDT** [240]	**2**	
15	**119747**	**SUPPORT – REEL ARM** [240]	**2**	
16	102264	PIN – LYNCH 3/16 X 9/16 IN.	3	
17	137626	PAD – REEL DRIVE WEAR	3	
18	119543	TOOL – GUARD TIP CHECK	1	
	119446	SUPPORT – PAN HINGE D (NOT ILLUSTRATED) [241]	1	
	119447	SUPPORT – PAN HINGE E (NOT ILLUSTRATED) [241]	1	
	119454	SUPPORT – PAN HINGE F (NOT ILLUSTRATED) [241]	1	
	119455	SUPPORT – PAN HINGE G (NOT ILLUSTRATED) [241]	1	
A	136506	BOLT – RHSSN M10 X 1.5 X 25-8.8-AA1J		
B	135799	NUT – HEX FLG CTR LOC M10 X 1.5-10		

230. Kit contains base kit (MD #B7269), pans kit (MD #B7273), and deflectors kit (MD #B7282, B7283, B7284, or B7285). Kits available through Whole Goods only.
231. Kits available through Whole Goods only.
232. Quantities: D130 = 4; D135 = 4; D140 = 4; D145 = 6.
233. Includes latch (MD #119723), clamp (NSS), six bolts (MD #184652), four lock spring washers (MD #30716), and two flat washers (MD 184709). Quantities: D130 = 30; D135 = 35; D140 = 40; D145 = 45.
234. Includes six rivnuts (MD #252179).
235. Six installed on each pan latch assembly (MD #119723).
236. Quantities: D130 = 2; D135 = 2; D140 = 4; D145 = 4.
237. Quantities: D130 = 3; D135 = 2; D140 = 3; D145 = 2.
238. Quantities: D130 = 2; D135 = 5; D140 = 2; D145 = 5.
239. Used on reel center arm.
240. Used on reel outer arms.
241. Included in the kit but is not used on D1 headers; used on FD1 headers only.

(OPTION) SUNFLOWER ATTACHMENT – BASE KIT

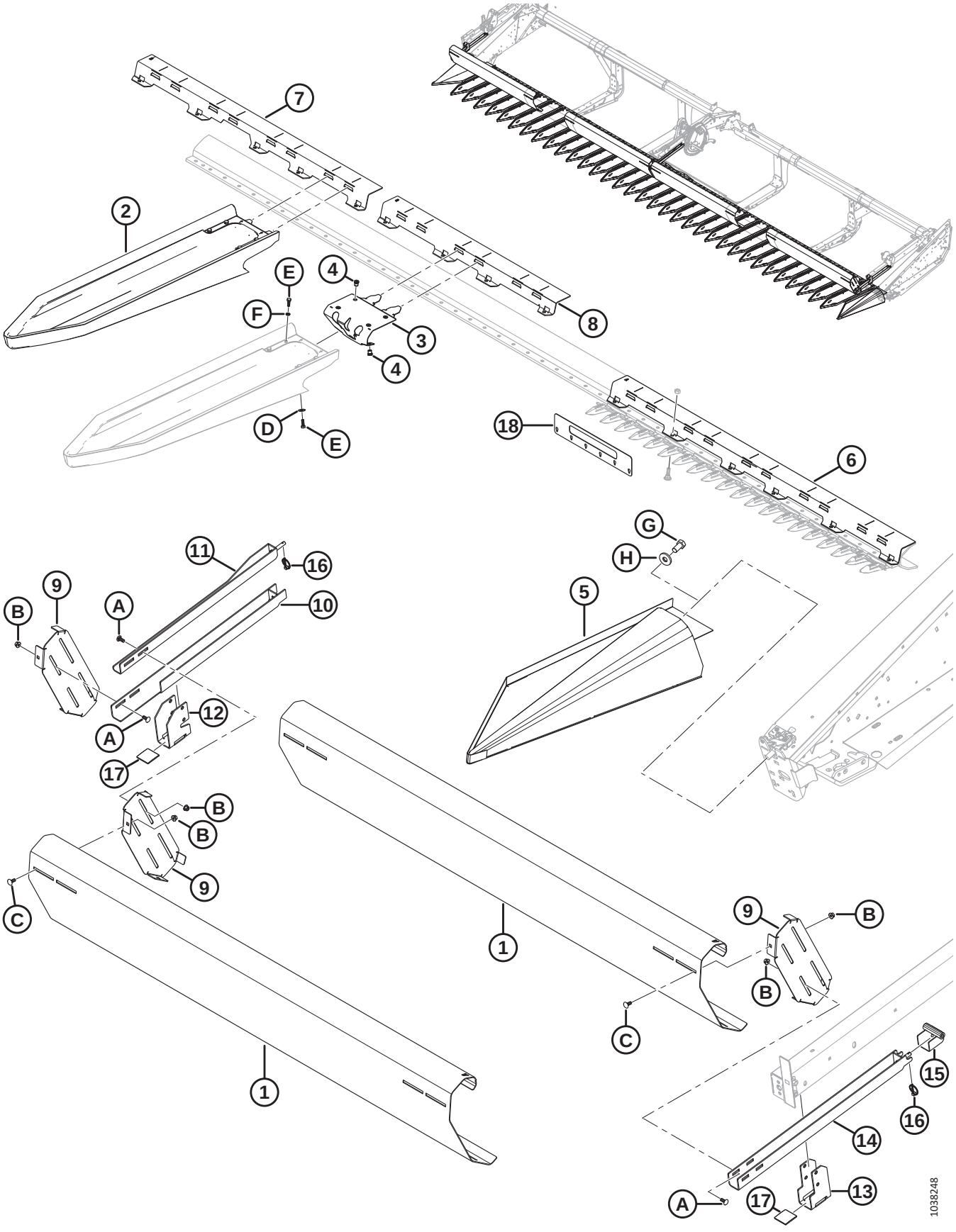

(OPTION) SUNFLOWER ATTACHMENT – BASE KIT

Ref	Part Number	Description	Qty	Serial Number
C	135785	BOLT – RHSN M10 X 1.5 X 25-8.8-AA1J		
D	184709	WASHER – FLAT LARGE M8-200HV		
E	184652	BOLT – HEX HD TFL M8 X 1.25 X 25-8.8-AA1J		
F	30716	WASHER – LOCK SPRING M8-CS-1055-1065-AA1J		
G	135579	BOLT – HEX HD 3/4-16 X 1.5-GR5-AA1J [242]		
H	6647	WASHER – FLAT [242]		

242. Used if latch assembly is not installed.

69 (Option) Sunflower Attachment – Pans

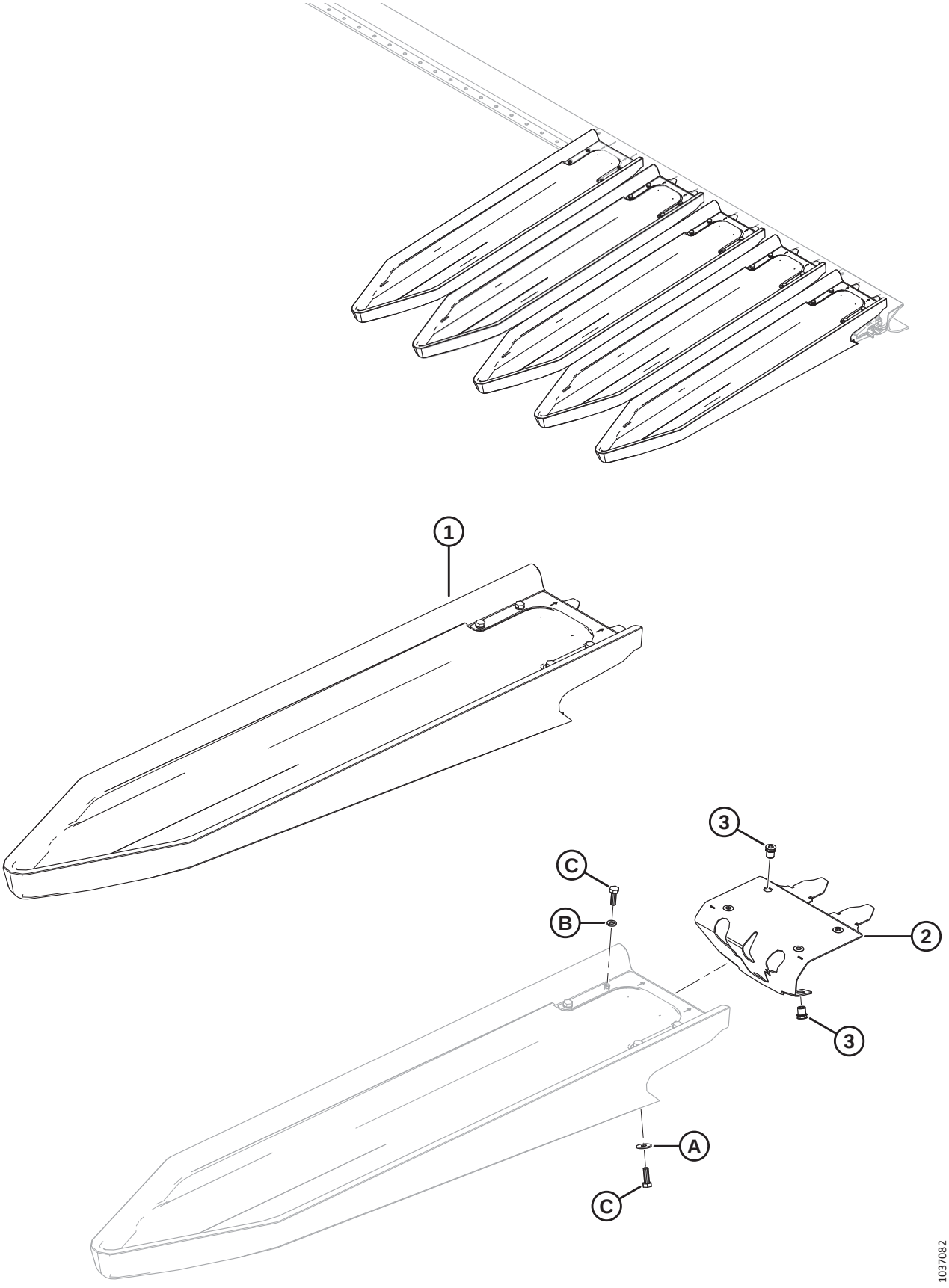

(OPTION) SUNFLOWER ATTACHMENT – PANS

Ref	Part Number	Description	Qty	Serial Number
	B7273	KIT – SUNFLOWER PAN (5 PANS) [243]	1	
1	**119722**	**PAN – QUICK ATTACH** [244]	**5**	
2	**119723**	**ASSEMBLY – PAN LATCH** [245]	**5**	
3	252179	RIVNUT – M8 X 1.25 HEX0.7-3.8	30	
A	184709	WASHER – FLAT LARGE M8-200HV		
B	**30716**	**WASHER – LOCK SPRING M8-CS-1055-1065-AA1J**		
C	184652	BOLT – HEX HD TFL M8 X 1.25 X 25-8.8-AA1J		

243. Kit contains 5 pans. Base kit (MD #B7269) contains pans for 30-ft. header. 35-ft. header requires 1 pan kit, 40-ft. header requires 2 pan kits, and 45-ft. header requires 3 pan kits. Kits available through Whole Goods only.
244. Includes latch (MD #119723), clamp (NSS), six bolts (MD #184652), four lock spring washers (MD #30716), and two flat washers (MD 184709).
245. Includes six rivnuts (MD #252179).

70 (Option) Sunflower Attachment – Deflectors

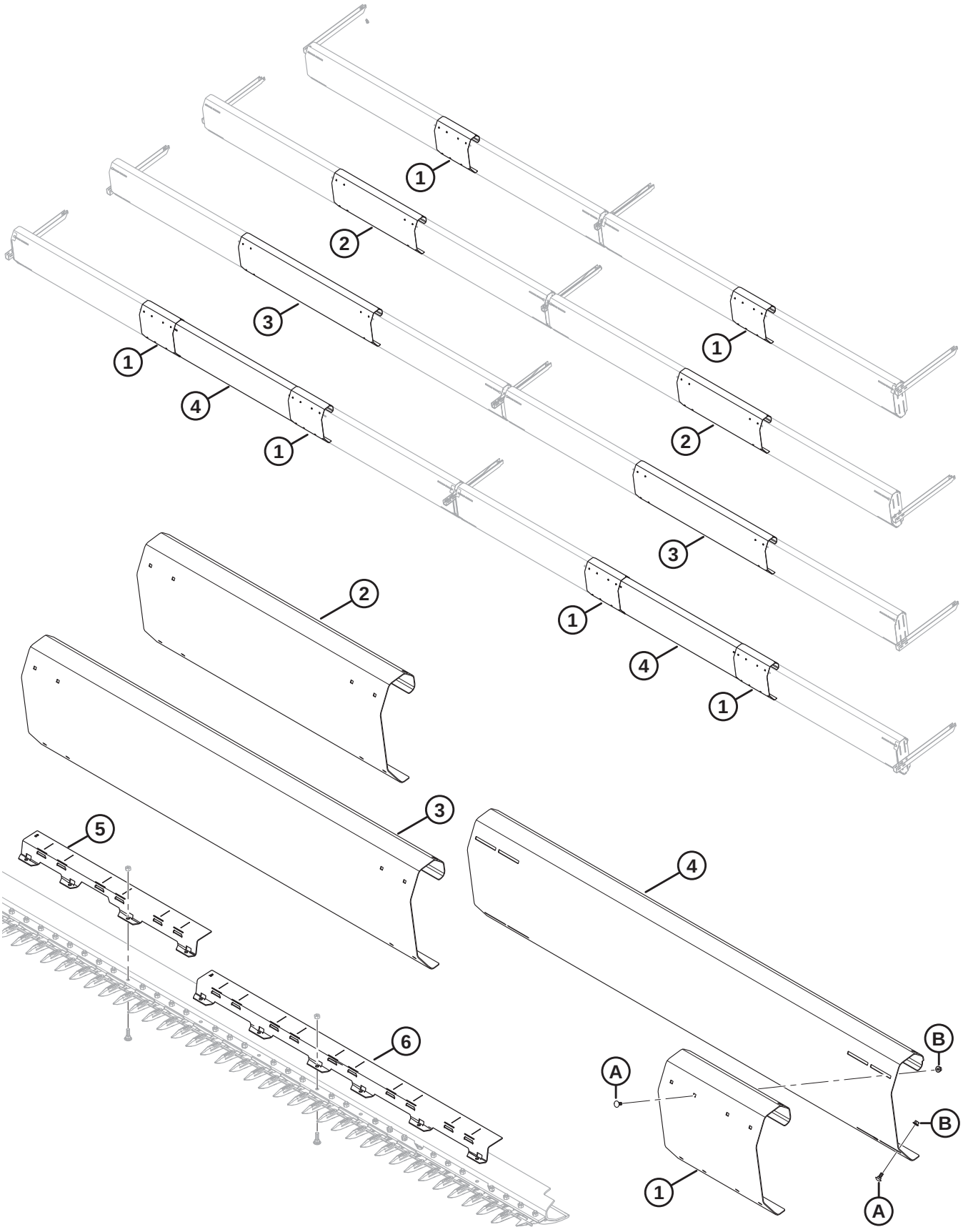

(OPTION) SUNFLOWER ATTACHMENT – DEFLECTORS

Ref	Part Number	Description	Qty	Serial Number
	B7282	KIT – SUNFLOWER DEFLECTOR 30 FT [246]		
	B7283	KIT – SUNFLOWER DEFLECTOR 35 FT [246]		
	B7284	KIT – SUNFLOWER DEFLECTOR 40 FT [246]		
	B7285	KIT – SUNFLOWER DEFLECTOR 45 FT [246]		
1	119519	DEFLECTOR – LEAN BAR B (30 AND 45 FT) [247]		
2	119531	DEFLECTOR – LEAN BAR C (35 FT)	2	
3	119518	DEFLECTOR – LEAN BAR D (40 FT)	2	
4	119530	DEFLECTOR – LEAN BAR A (45 FT)	2	
5	119457	SUPPORT – PAN 3 FT C (35 AND 45 FT)	3	
6	119415	SUPPORT – PAN 5 FT A (40 AND 45 FT)	2	
A	135785	BOLT – RHSN M10 X 1.5 X 25-8.8-AA1J (45 FT)		
B	135799	NUT – HEX FLG CTR LOC M10 X 1.5-10 (45 FT)		

246. Kits available through Whole Goods only.
247. Quantities: 30 ft. = 2, 45 ft. = 4

71 (Option) Tine Tube Reinforcing Kit

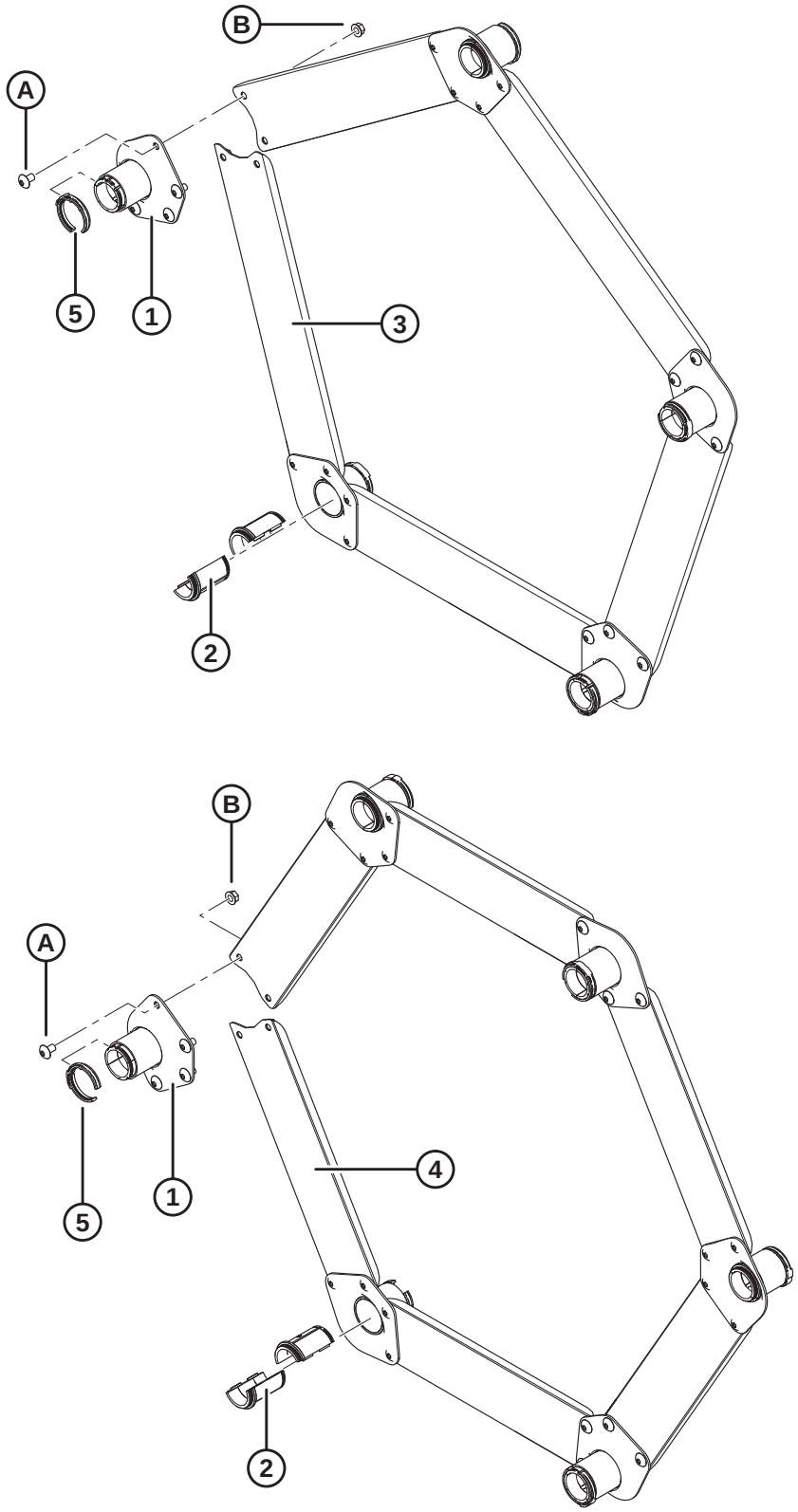

(OPTION) TINE TUBE REINFORCING KIT

NOTE:

Illustration; TOP: 5 bat, BOTTOM: 6 bat.

Ref	Part Number	Description	Qty 5/6 Bat	Serial Number
	B5825	KIT – D60/5, FD70/5 TINE TUBE REINFORCING (FOR 5 BAT REEL HEADERS IN HEAVY REEL LOAD CONDITIONS) [248]		
	B5826	KIT – D60/5, FD70/5 TINE TUBE REINFORCING (FOR 6 BAT REEL HEADERS IN HEAVY REEL LOAD CONDITIONS) [248]		
1	164988	SUPPORT – WELDT	5/6	
2	220939	BUSHING – TINE TUBE (BOX OF 25) [249]	10/12	
3	164993	CHANNEL – TIE BAR (5 BAT REEL)	5/0	
4	164995	CHANNEL – TIE BAR (6 BAT REEL)	0/6	
5	220941	CLAMP – TINE TUBE BUSHING, CENTER RIB (BOX OF 5) [250]	5/6	
A	135450	SCREW – MACHINE		
B	30228	NUT – FLANGE DT SMOOTH FACE 0.375-16 UNC		

248. Kits available through Whole Goods only.
249. Not sold individually; to service this part, a box of 25 tine tube bushings must be ordered.
250. Not sold individually; to service this part, a box of 5 tine tube bushing clamps must be ordered.

72 (Option) Upper Cross Auger (D125)

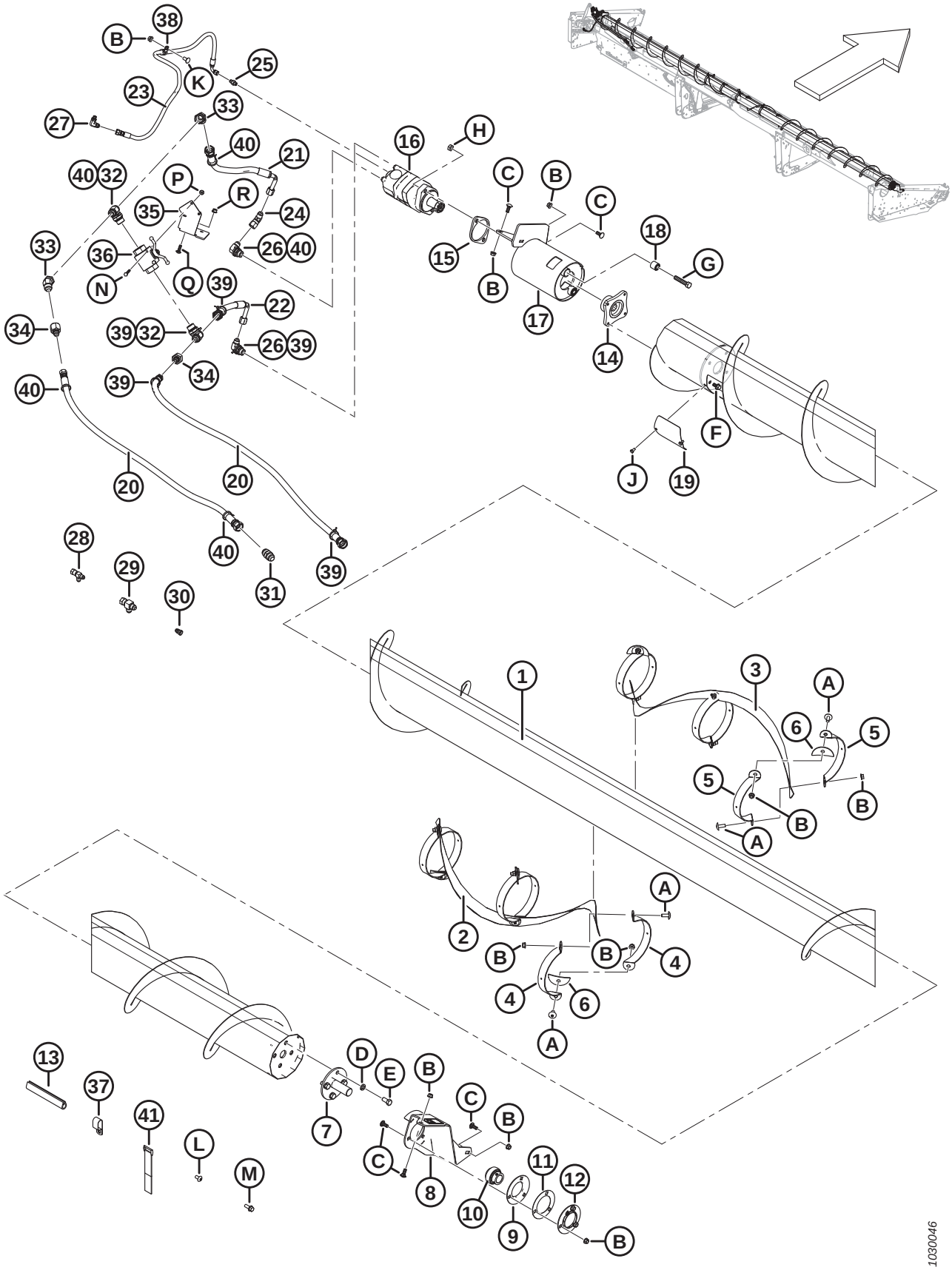

(OPTION) UPPER CROSS AUGER (D125)

Ref	Part Number	Description	Qty	Serial Number
	B6461	KIT – 1 SERIES 25 FT UCA (NORTH AMERICA) [251]		
	B9044	KIT – 1 SERIES EUROPEAN COMBINE 25 FT UCA [251]		
1	294435	AUGER – UCA HC WELDT 25 FT	1	
2	294161	FLIGHTING – LH CENTER	1	
3	294163	FLIGHTING – RH CENTER	1	
4	294426	SUPPORT – LH	6	
5	294427	SUPPORT – RH	6	
6	255883	PLATE	6	
7	132303	SHAFT – END WELDT, WITH DISC	1	
	294677	KIT – DISC 21-36 FT UCA (DISC ONLY) [252]	OPT	
8	296554	SUPPORT – RH UCA ASSY [253]	1	
9	49306	FLANGE	1	
10	21859	BEARING – SPH OD EXT INNER RACE 1-3/16 BORE	1	
11	172340	SHIM	1	
12	30661	FLANGE	1	
13	45427	MOULDING – RH	1	
14	253722	HUB – UCA HC MOTOR	1	
15	253446	PLATE – SPACER	1	
16	255829	MOTOR – UCA (130 CC) [254]	1	
	283002	MOTOR – EATON 2000 (100 CC) [255]	1	
	174304	SEAL KIT		
	137375	NUT – SLOTTED JAM 1.0-20 UNEF		
17	296556	SUPPORT – ASSEMBLY [256]	1	
18	21810	BUSHING – RUBBER	2	
19	279261	COVER – UCA ACCESS	1	
20	294220	HOSE – HYDRAULIC	2	
21	279716	HOSE – HYD, 0.5 IN. I.D., 400 MM LG, 100R17, METAL REIN.	1	
22	279717	HOSE – HYD, 0.5 IN. I.D., 270 MM LG, 100R17, METAL REIN.	1	
23	254248	HOSE – HYD, 0.25 IN. I.D., 900 MM LG, 100R17, METAL REINFORCED	1	
24	135685	FITTING – ELBOW 45° HYD	1	
25	112184	FITTING – ADAPTER HYD	1	
26	21801	FITTING – ELBOW 90° HYD	2	
27	50104	FITTING – ELBOW 90° HYD	1	
28	30873	FITTING – HYD TEE	1	
29	108268	FITTING – HYD TEE	1	
30	30981	FITTING – ADAPTER HYD REDUCER 1/2 X 3/8 [257]	1	
	21069	NUT – TUBE 37° JIC 1/2 IN.	1	

251. Kits available through Whole Goods only.
252. Kit used to repair disc on shaft (MD #132303).
253. Support includes decal (MD #279085).
254. For use on all SP headers and combine headers not in the European market.
255. For use in European market with increased UCA speed.
256. Includes two bushings (MD #21810) and decal (MD #279085).
257. Includes tube nut (MD #21069).

(OPTION) UPPER CROSS AUGER (D125)

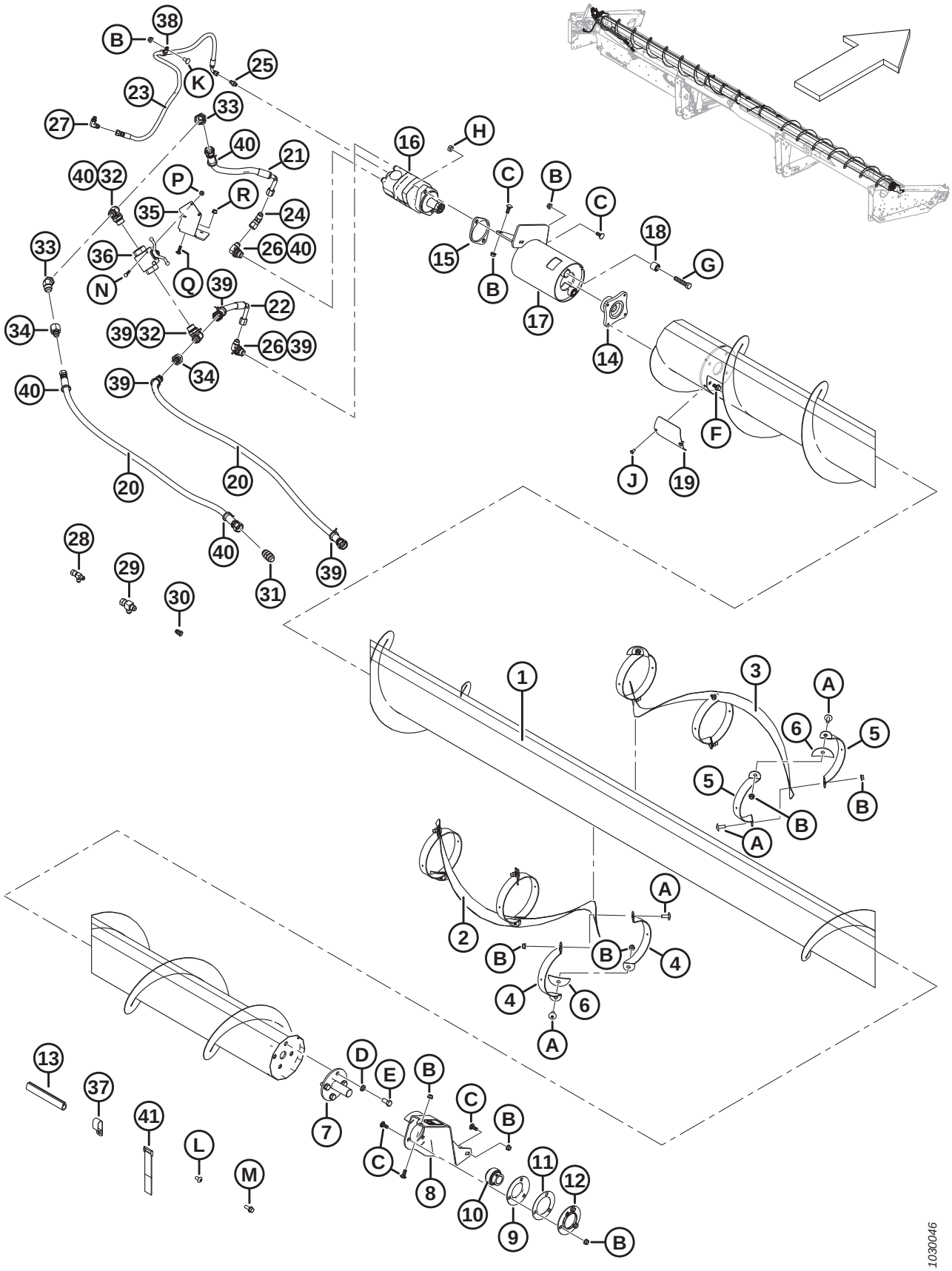

(OPTION) UPPER CROSS AUGER (D125)

Ref	Part Number	Description	Qty	Serial Number
31	30376	FITTING – UNION HYD	1	
32	50050	FITTING – TEE HYD STR THD BRANCH TEE CW O-RING	2	
33	135240	FITTING – ELBOW 45° HYD	2	
34	136952	FITTING – ADAPTER HYD REDUCER	2	
35	279966	BRACKET – BV MOUNT, RIGID	1	
36	294263	VALVE – BALL	1	
37	103738	CLAMP – PVC INSULATED 13/16 IN. TUBE SIZE	7	
38	135818	CLAMP – INSULATED 1/2 IN.	1	
39	252795	FASTENER – CABLE TIE, PINK	5	
40	252794	FASTENER – CABLE TIE, PURPLE	5	
41	135443	CINCH STRAP (4 IN. LG)	3	
	135444	CINCH STRAP (6 IN. LG)	2	
A	135507	SCREW – MACHINE, TRUSS HD TORX, 38 NC X 1 LG		
B	30228	NUT – FLG DT SMTH FACE 0.375-16 UNC		
C	19965	BOLT – RHSN 3/8-16 X 1-GR5-ZP		
D	18638	WASHER – REG. LOCK 1/2 IN. NOM. I.D. ZP		
E	21575	BOLT – HH 1/2 NC X 1.0 LG GR 5 ZP		
F	135963	BOLT – HH FLG (SM FACE) 3/8 NC X 0.75 GR 5 ZP		
G	21760	BOLT – HH 1/2 NC X 2.5 LG GR 5 ZP		
H	137727	NUT – HEX JAM-DT 1/2-13 UNC GR 5 ZP		
J	21580	BOLT – HEX HD 1/4 NC X 0.5 LG GR 5 ZP		
K	21863	BOLT – RHSSN 3/8 NC X 0.75 LG GR 5 ZP		
L	135157	SCREW – MACHINE		
M	135966	BOLT – HH FLG SM FACE 3/8 NC X 1.0 GR 5 ZP		
N	21854	BOLT – HH 1/4 NC X 2.5 LG GR 5 ZP		
P	135248	NUT – HEX FLG CTR LOC		
Q	136824	BOLT – RHSSN M8 X 1.25 X 25-8.8-A2L		
R	135337	NUT – HEX FLG CTR LOC M8 X 1.25-8-A2L		

73 (Option) Upper Cross Auger – Left End (D130, D135, and D140) – 2021 and Prior

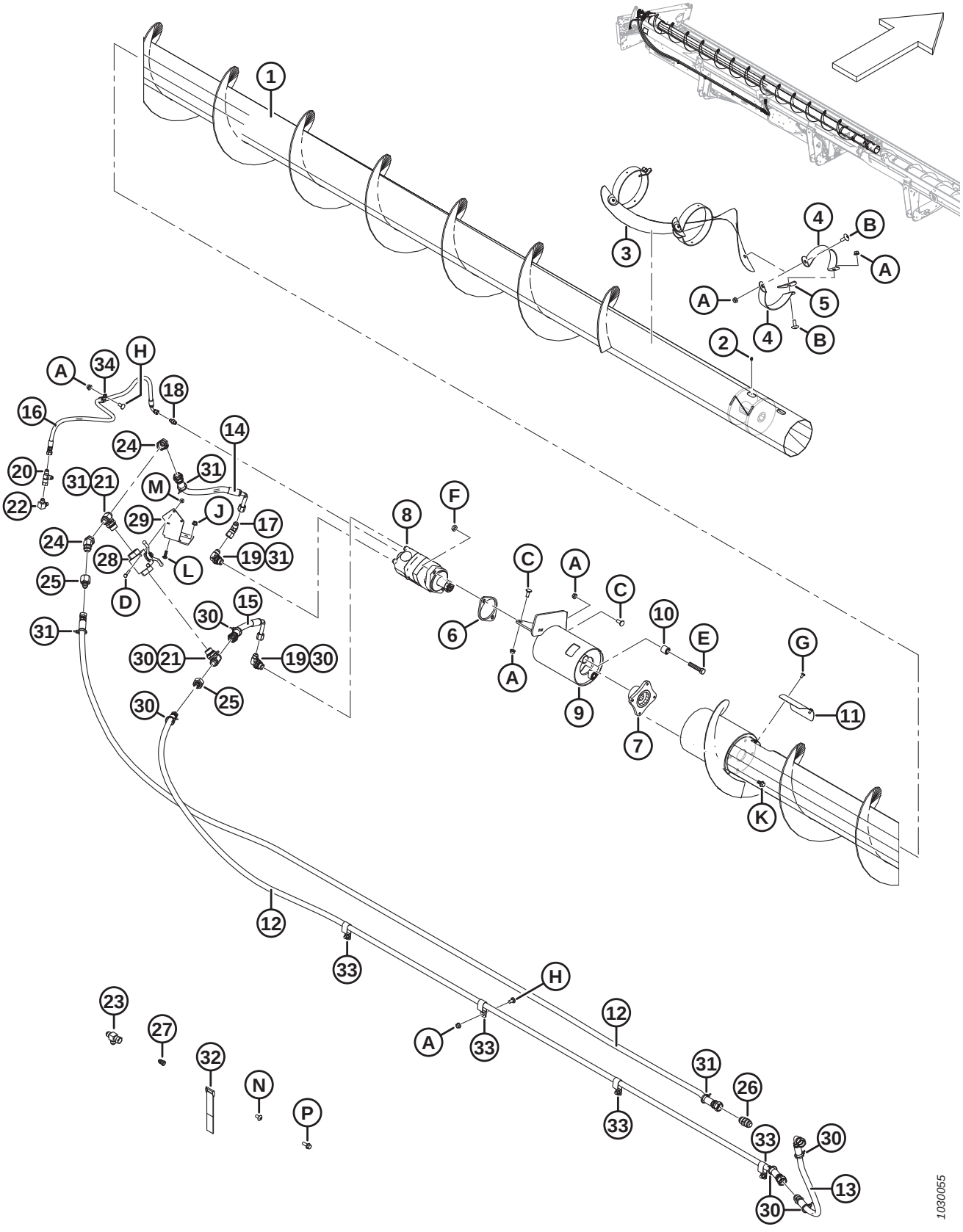

(OPTION) UPPER CROSS AUGER – LEFT END (D130, D135, AND D140) – 2021 AND PRIOR

Ref	Part Number	Description	Qty	Serial Number
1	294519	AUGER – UCA SP LH WELDT 30 FT	1	
	294517	AUGER – UCA SP LH WELDT 35 FT	1	
	294516	AUGER – UCA SP LH WELDT 40 FT	1	
	294682	KIT – WELDT UCA REPAIR SLEEVE [258]	A/R	
2	30934	FITTING – 1/4-28 TAPER THD	1	
3	335719	FLIGHTING – LH CENTER	1	
4	294424	SUPPORT – LH	6	
5	255883	PLATE	3	
6	253446	PLATE – SPACER	1	
7	253722	HUB – UCA HC MOTOR	1	
8	255829	MOTOR – UCA (130 CC) [259]	1	
	283002	MOTOR – EATON 2000 (100 CC) [260]	1	
	174304	SEAL KIT		
	137375	NUT – SLOTTED JAM 1.0-20 UNEF		
9	296556	SUPPORT – ASSEMBLY [261]	1	
10	21810	BUSHING – RUBBER	2	
11	279261	COVER – UCA ACCESS	1	
12	294221	HOSE – HYDRAULIC (30 FT)	2	
	294222	HOSE – HYDRAULIC (35 FT)	2	
	294223	HOSE – HYDRAULIC (40 FT)	2	
13	294226	HOSE – HYD, 0.5 IN. I.D., 800 MMLG, 100R17, METAL REIN.	2	
14	279716	HOSE – HYD, 0.5 IN. I.D., 400 MM LG, 100R17, METAL REIN.	1	
15	279717	HOSE – HYD, 0.5 IN. I.D., 270 MM LG, 100R17, METAL REIN.	1	
16	254248	HOSE – HYD, 0.25 IN. I.D., 900 MM LG, 100R17, METAL REINFORCED	1	
17	135685	FITTING – ELBOW 45° HYD	1	
18	112184	FITTING – ADAPTER HYD	1	
19	21801	FITTING – ELBOW 90° HYD	2	
20	30873	FITTING – HYD TEE	1	
21	50050	FITTING – TEE HYD STR THD BRANCH TEE CW O-RING	2	
22	50104	FITTING – ELBOW 90° HYD	1	
23	108268	FITTING – HYD TEE	1	
24	135240	FITTING – ELBOW 45° HYD	2	
25	136952	FITTING – ADAPTER HYD REDUCER	2	
26	30376	FITTING – UNION HYD	1	
27	30981	FITTING – ADAPTER HYD REDUCER 1/2 X 3/8 [262]	1	
	21069	NUT – TUBE 37° JIC 1/2 IN.	1	
28	294263	VALVE – BALL	1	
29	279966	BRACKET – BV MOUNT, RIGID	1	

258. The kit is for 2021 and prior upper cross augers that use hex shafts at the center support; intended to repair damage to the auger. Welding is required.
259. For use on all SP headers and combine headers not in the European market.
260. For use in European market with increased UCA speed.
261. Includes two bushings (MD #21810) and decal (MD #279085).
262. Includes tube nut (MD #21069).

(OPTION) UPPER CROSS AUGER – LEFT END (D130, D135, AND D140) – 2021 AND PRIOR

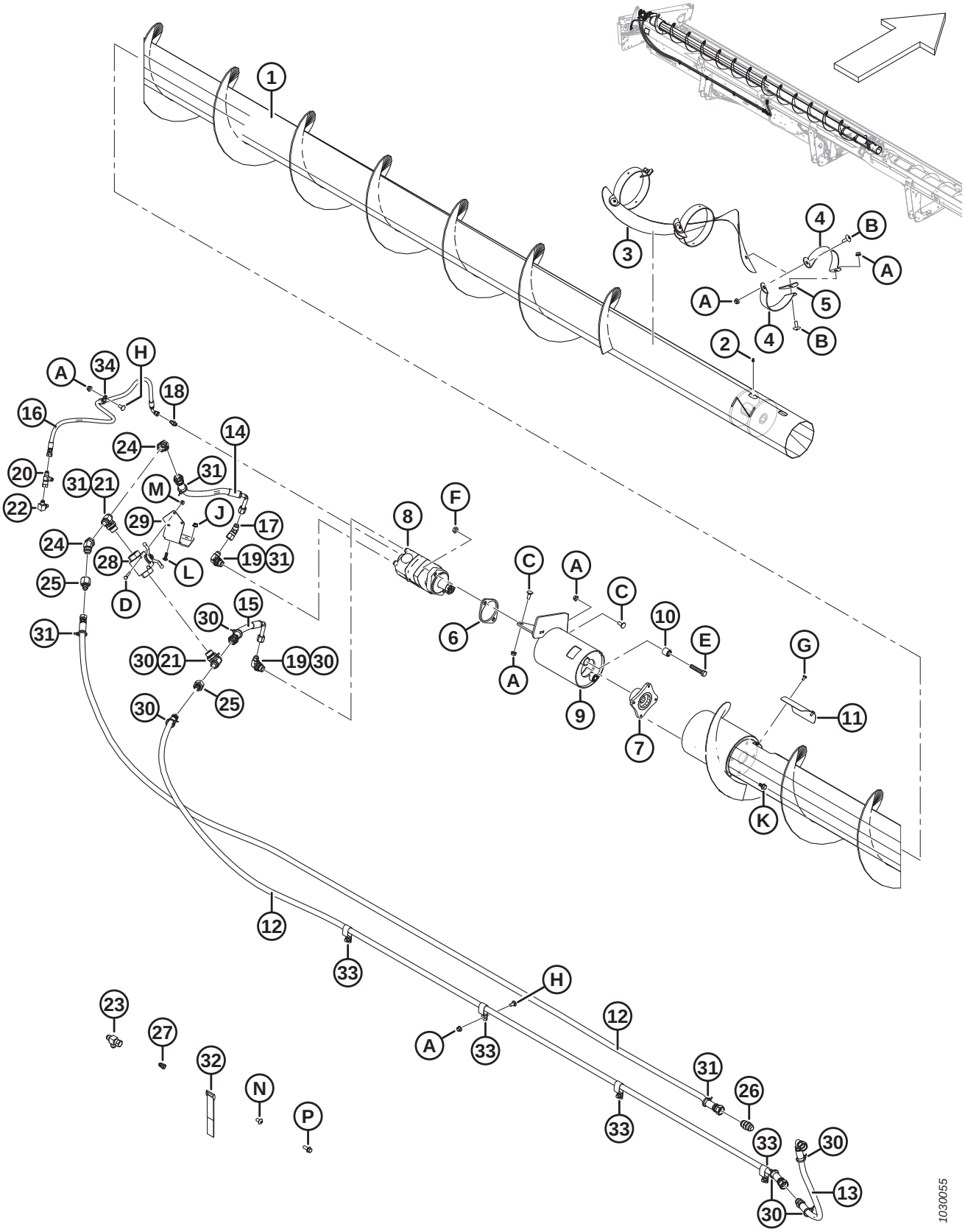

(OPTION) UPPER CROSS AUGER – LEFT END (D130, D135, AND D140) – 2021 AND PRIOR

Ref	Part Number	Description	Qty	Serial Number
30	252795	FASTENER – CABLE TIE, PINK	8	
31	252794	FASTENER – CABLE TIE, PURPLE	7	
32	135443	CINCH STRAP (4 IN. LG)	3	
	135444	CINCH STRAP (6 IN. LG)	2	
33	103738	CLAMP – PVC INSULATED 13/16 IN. TUBE SIZE	7	
34	135818	CLAMP – INSULATED 1/2 IN.	1	
A	30228	NUT – FLG DT SMTH FACE 0.375-16 UNC		
B	135507	SCREW – MACHINE, TRUSS HD TORX, 38 NC X 1 LG		
C	19965	BOLT – RHSN 3/8-16 X 1-GR5-ZP		
D	21854	BOLT – HH 1/4 NC X 2.5 LG GR 5 ZP		
E	21760	BOLT – HH 1/2 NC X 2.5 LG GR 5 ZP		
F	137727	NUT – HEX JAM-DT 1/2-13 UNC GR 5 ZP		
G	21580	BOLT – HEX HD 1/4 NC X 0.5 LG GR 5 ZP		
H	21863	BOLT – RHSSN 3/8 NC X 0.75 LG GR 5 ZP		
J	135248	NUT – HEX FLG CTR LOC		
K	135963	BOLT – HH FLG (SM FACE) 3/8 NC X 0.75 GR 5 ZP		
L	136824	BOLT – RHSSN M8 X 1.25 X 25-8.8-A2L		
M	135337	NUT – HEX FLG CTR LOC M8 X 1.25-8-A2L		
N	135157	SCREW – MACHINE		
P	135966	BOLT – HH FLG SM FACE 3/8 NC X 1.0 GR 5 ZP		

74 (Option) Upper Cross Auger – Right End (D130, D135, and D140) – 2021 and Prior

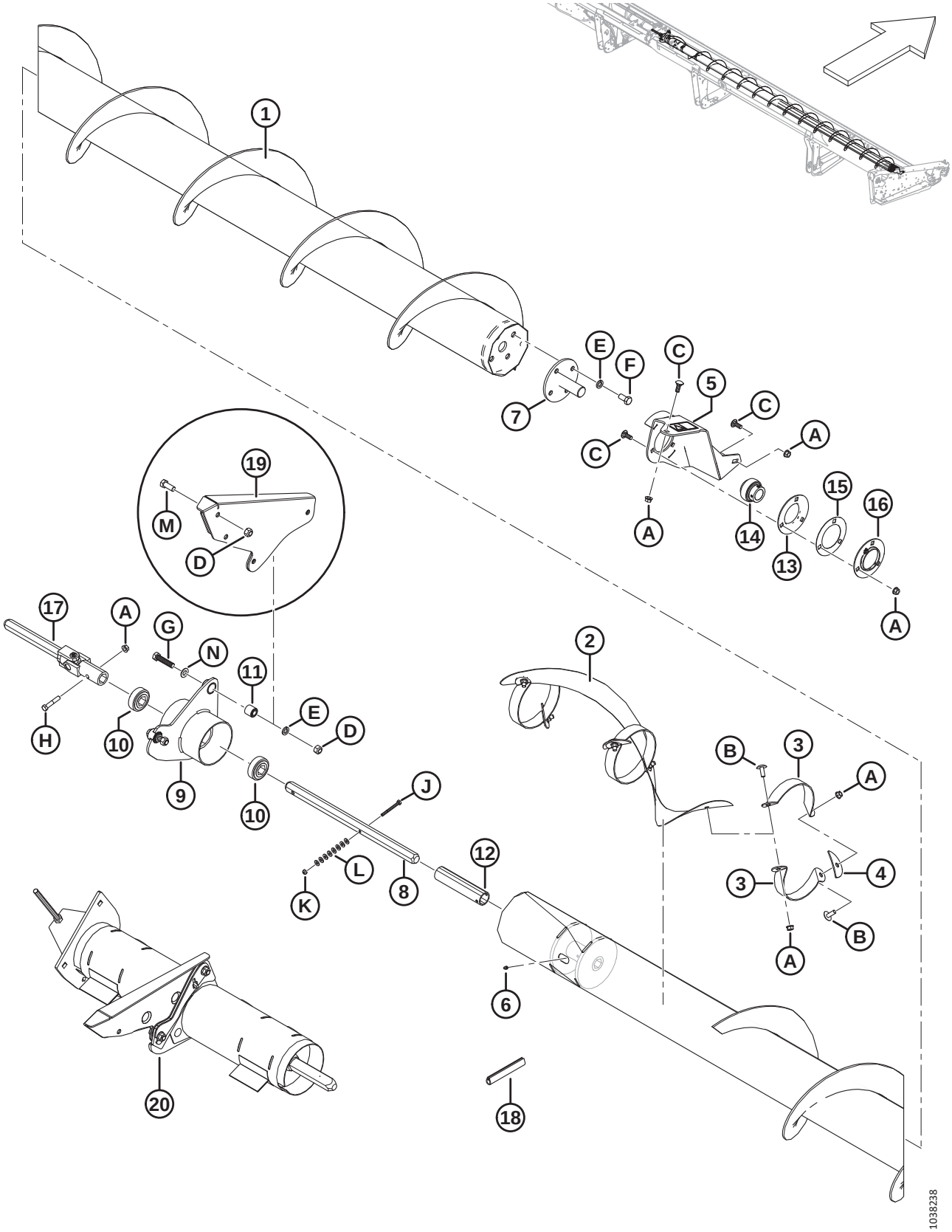

(OPTION) UPPER CROSS AUGER – RIGHT END (D130, D135, AND D140) – 2021 AND PRIOR

Ref	Part Number	Description	Qty	Serial Number
1	294436	AUGER – UCA RH WELDT 30 FT	1	
	294437	AUGER – UCA HC RH WELDT 35 FT	1	
	294438	AUGER – UCA HC RH WELDT 40 FT	1	
	294682	KIT – WELDT UCA REPAIR SLEEVE [263]	A/R	
2	335592	FLIGHTING – RH CENTER	1	
3	294425	SUPPORT – RH	6	
4	255883	PLATE	3	
5	296554	SUPPORT – RH UCA ASSY [264]	1	
6	30934	FITTING – 1/4-28 TAPER THD	1	
7	132303	SHAFT – END WELDT, WITH DISC	1	
	294677	KIT – DISC 21-36 FT UCA (DISC ONLY) [265]	OPT	
8	174081	SHAFT – HEX	1	
9	172511	SUPPORT – CENTER HANGER ASSY [266]	1	
10	172507	BEARING – BALL HEX BORE	2	
11	21810	BUSHING – RUBBER	2	
12	174082	SPACER	1	
13	49306	FLANGE	1	
14	21859	BEARING – SPH OD EXT INNER RACE 1-3/16 BORE	1	
15	172340	SHIM	1	
16	30661	FLANGE	1	
17	233395	JOINT – UNIVERSAL	1	
18	45427	MOULDING – RH	1	
19	174035	SUPPORT – CENTER WELDT (30-35 FT ONLY) [267]	1	
20	**335589**	**KIT – UCA CENTER SUPPORT REPAIR** [268]	**OPT**	
A	30228	NUT – FLG DT SMTH FACE 0.375-16 UNC		
B	135507	SCREW – MACHINE, TRUSS HD TORX, 38 NC X 1 LG		
C	19965	BOLT – RHSN 3/8-16 X 1-GR5-ZP		
D	18697	NUT – HEX LOCK DT .500-13 UNC		
E	18638	WASHER – REG. LOCK 1/2 IN. NOM. I.D. ZP		
F	21575	BOLT – HH 1/2 NC X 1.0 LG GR 5 ZP		
G	21578	BOLT – HH 1/2 NC X 2.25 LG GR 5 ZP		
H	21354	BOLT – HH 3/8 NC X 2.0 LG GR 5 ZP		
J	21854	BOLT – HH 1/4 NC X 2.5 LG GR 5 ZP		

263. The kit is for 2021 and prior upper cross augers that use hex shafts at the center support; intended to repair damage to the auger. Welding is required.
264. Includes decal (MD #279085).
265. Kit used to repair disc on shaft (MD #132303).
266. Includes two bearings (MD #172507) and two bushings (MD #21810).
267. Support only required for 30–35 ft. headers. 40 ft. header has support (MD #172511) attached directly to the header frame.
268. Kit is used to upgrade the center support assembly on 2-piece upper cross augers. Replaces U-joint (MD #233395), center support (MD #172511), bearings (MD #172507), hex shaft (MD 174081), spacer (MD #174082), and hardware. Includes two repair sleeve kits (MD #NSS). Refer to Section *77 (Option) Upper Cross Auger – Center Support Repair Kit, page 233*.

(OPTION) UPPER CROSS AUGER – RIGHT END (D130, D135, AND D140) – 2021 AND PRIOR

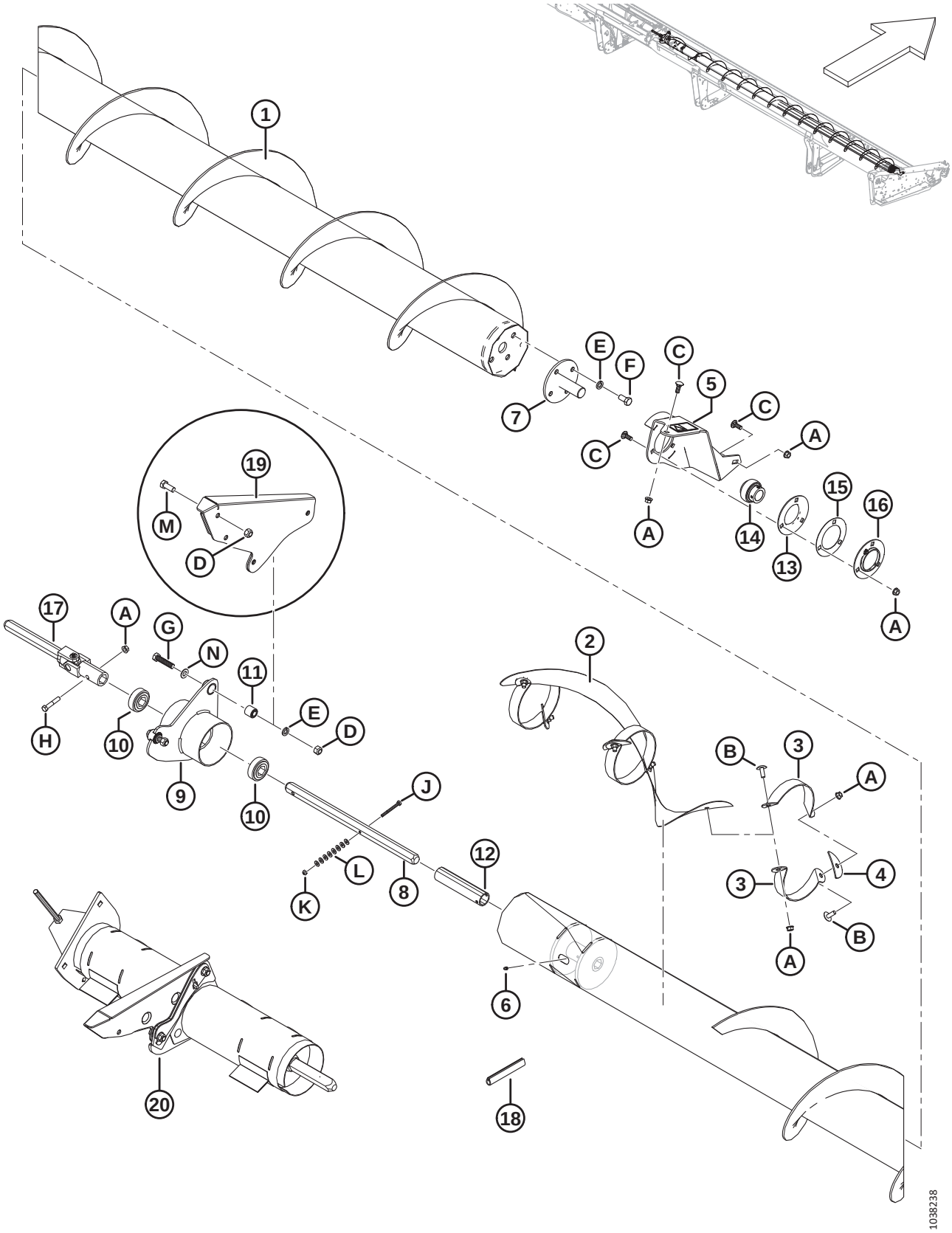

(OPTION) UPPER CROSS AUGER – RIGHT END (D130, D135, AND D140) – 2021 AND PRIOR

Ref	Part Number	Description	Qty	Serial Number
K	18724	NUT – HEX LOCK DT 1/4-20 UNC ZP		
L	18596	WASHER – SAE FLAT 9/32 I.D. X 5/8 IN. O.D. ZP		
M	21491	BOLT – HH 1/2 NC X 1.25 LG GR 5 ZP		
N	184589	WASHER – FLAT 9/16 X 1.375 AA1J		

75 (Option) Upper Cross Auger – Left End (D145) – 2021 and Prior

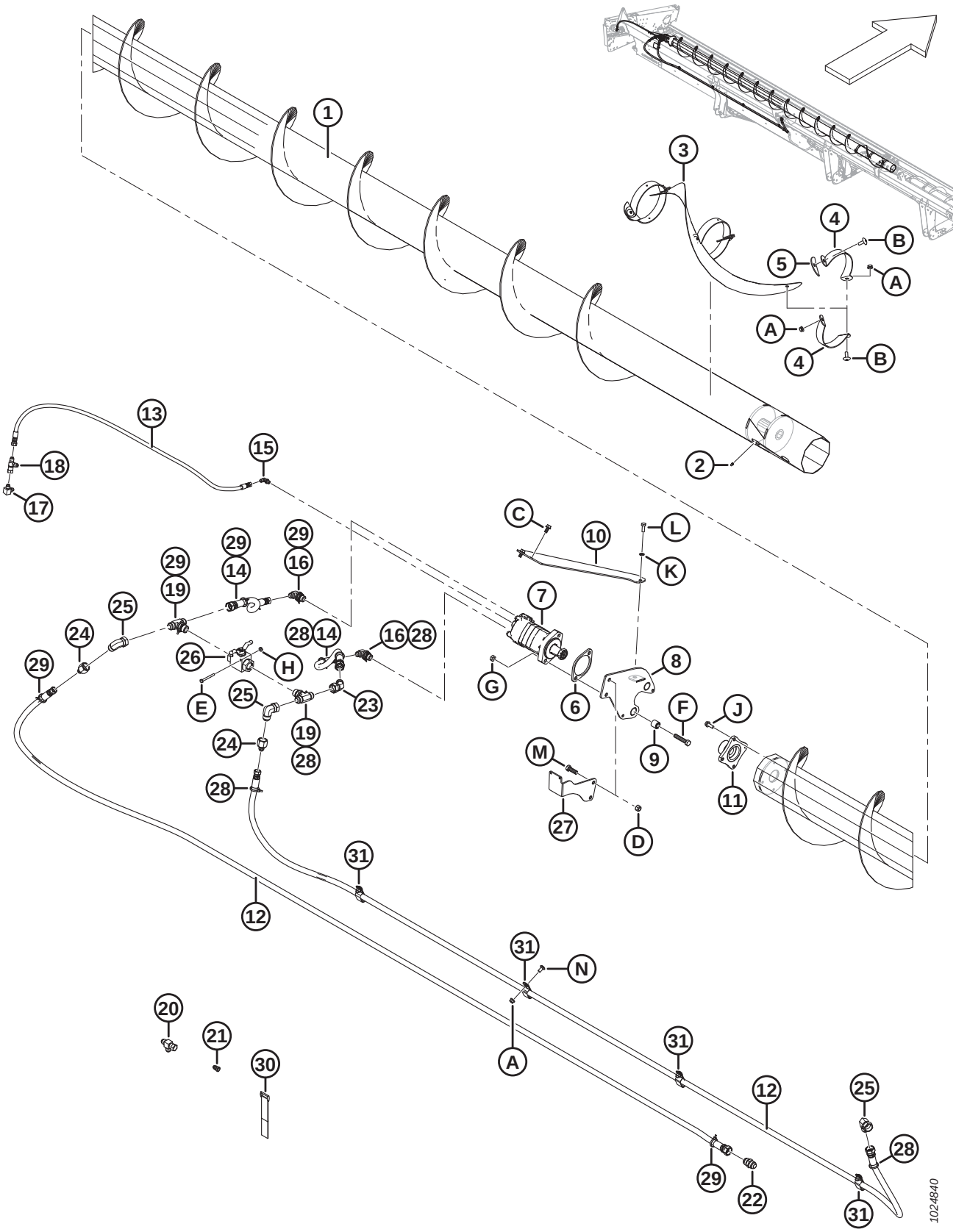

(OPTION) UPPER CROSS AUGER – LEFT END (D145) – 2021 AND PRIOR

Ref	Part Number	Description	Qty	Serial Number
1	294515	AUGER – UCA SP LH WELDT 45 FT	1	
	294682	KIT – WELDT UCA REPAIR SLEEVE [269]	A/R	
2	30934	FITTING – 1/4-28 TAPER THD	1	
3	335719	FLIGHTING – LH CENTER	1	
4	294424	SUPPORT – LH	6	
5	255883	PLATE	3	
6	253446	PLATE – SPACER	1	
7	255829	MOTOR – UCA (130 CC) [270]	1	
	283002	MOTOR – EATON 2000 (100 CC) [271]	1	
	174304	SEAL KIT		
	137375	NUT – SLOTTED JAM 1.0-20 UNEF		
8	174168	SUPPORT – LH HANGER ASSY [272]	1	
9	21810	BUSHING – RUBBER	2	
10	279925	BRACE – LH	1	
11	279775	HUB MACHINING	1	
12	294224	HOSE – HYDRAULIC (45 FT)	2	
13	294225	HOSE – HYDRAULIC (45 FT)	1	
14	279715	HOSE – HYD, 0.5 IN. I.D., 500 MM LG, 100R17, METAL REIN.	2	
15	135647	FITTING – ELBOW 90° HYD	1	
16	21801	FITTING – ELBOW 90° HYD	2	
17	50104	FITTING – ELBOW 90° HYD	1	
18	30873	FITTING – HYD TEE	1	
19	50050	FITTING – TEE HYD STR THD BRANCH TEE CW O-RING	2	
20	108268	FITTING – HYD TEE	1	
21	30981	FITTING – ADAPTER HYD REDUCER 1/2 X 3/8 [273]	1	
	21069	NUT – TUBE 37° JIC 1/2 IN.	1	
22	30376	FITTING – UNION HYD	1	
23	135240	FITTING – ELBOW 45° HYD	1	
24	136952	FITTING – ADAPTER HYD REDUCER	2	
25	50175	FITTING – ELBOW 90° HYD	2	
26	294263	VALVE – BALL	1	
27	279834	BRACKET – BALL VALVE MOUNT	1	
28	252795	FASTENER – CABLE TIE, PINK	6	
29	252794	FASTENER – CABLE TIE, PURPLE	5	
30	135443	CINCH STRAP (4 IN. LG)	3	
	135444	CINCH STRAP (6 IN. LG)	4	
31	103738	CLAMP – PVC INSULATED 13/16 IN. TUBE SIZE	7	

269. The kit is for 2021 and prior upper cross augers that use hex shafts at the center support; intended to repair damage to the auger. Welding is required.
270. For use on all SP headers and combine headers not in the European market.
271. For use in European market with increased UCA speed.
272. Includes two bushings (MD #21810) and decal (MD #174682).
273. Includes tube nut (MD #21069).

(OPTION) UPPER CROSS AUGER – LEFT END (D145) – 2021 AND PRIOR

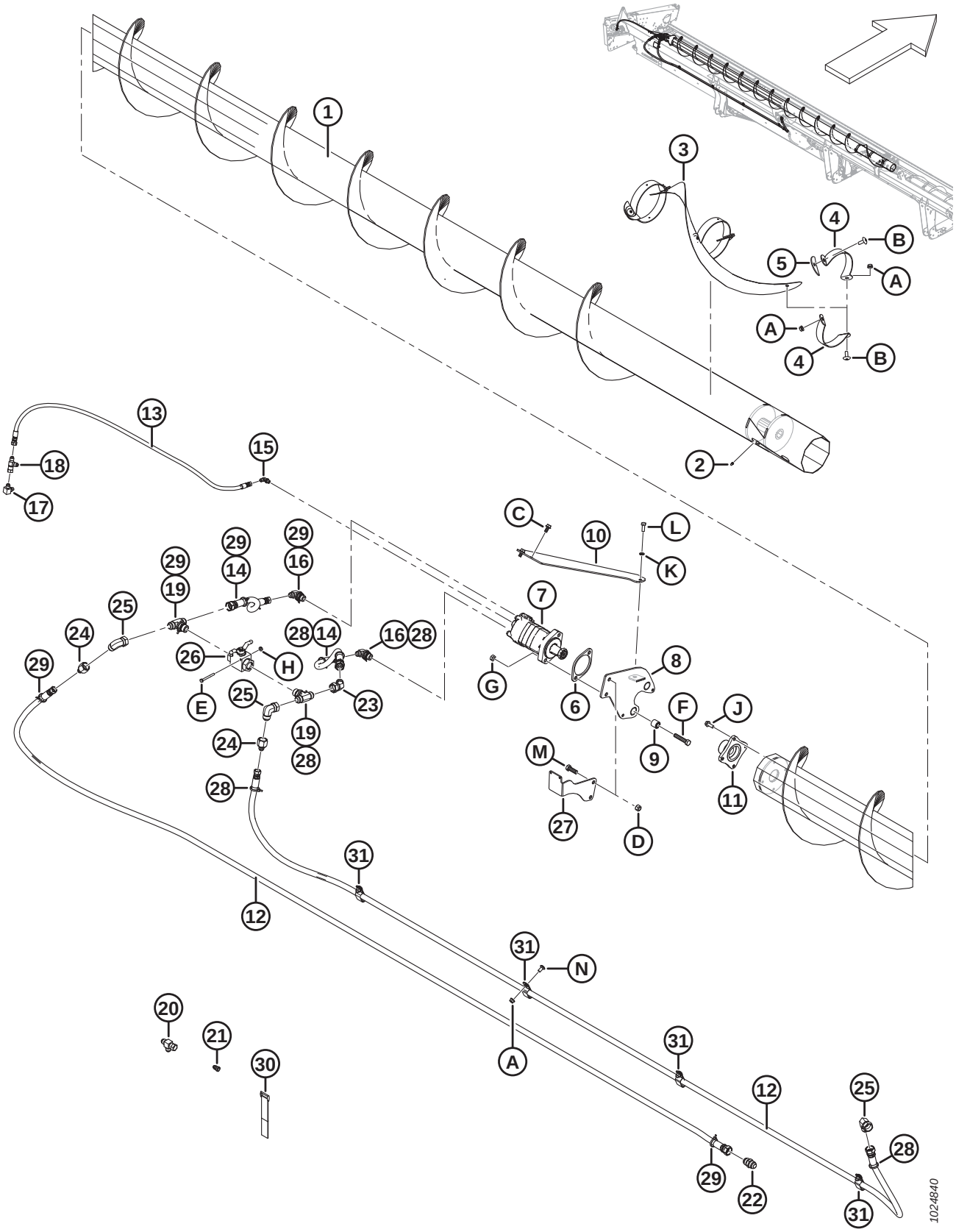

(OPTION) UPPER CROSS AUGER – LEFT END (D145) – 2021 AND PRIOR

Ref	Part Number	Description	Qty	Serial Number
A	30228	NUT – FLG DT SMTH FACE 0.375-16 UNC		
B	135507	SCREW – MACHINE, TRUSS HD TORX, 38 NC X 1 LG		
C	101897	SCREW – HEX WASH HD THD ROLLING 3/8 NC X 3/4		
D	18697	NUT – HEX LOCK DT .500-13 UNC		
E	21854	BOLT – HH 1/4 NC X 2.5 LG GR 5 ZP		
F	21760	BOLT – HH 1/2 NC X 2.5 LG GR 5 ZP		
G	137727	NUT – HEX JAM-DT 1/2-13 UNC GR 5 ZP		
H	135248	NUT – HEX FLG CTR LOC		
J	135193	SCREW – HEX WASH HD THD ROLLING 3/8 NC X 1.0		
K	18637	WASHER – REG. LOCK 3/8 IN. NOM. I.D. ZP		
L	20077	BOLT – HEX HD 3/8 NC X 1.0 LG GR 5 ZP		
M	18723	BOLT – HH 1/2 NC X 1.5 LG TFL GR 5 ZP		
N	21863	BOLT – RHSSN 3/8 NC X 0.75 LG GR 5 ZP		

76 (Option) Upper Cross Auger – Right End (D145) – 2021 and Prior

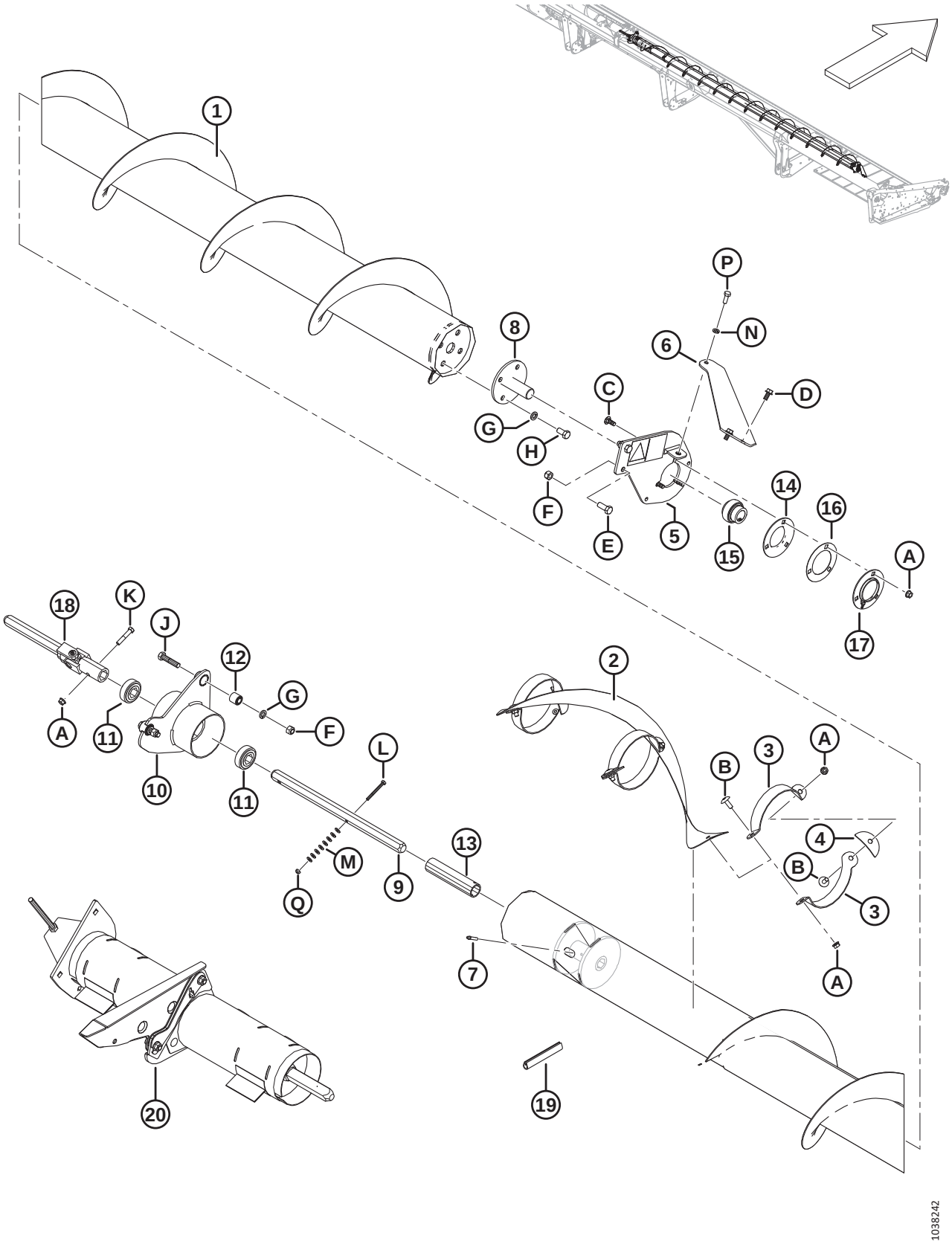

(OPTION) UPPER CROSS AUGER – RIGHT END (D145) – 2021 AND PRIOR

Ref	Part Number	Description	Qty	Serial Number
1	294518	AUGER – UCA SP RH WELDT 45 FT	1	
	294682	KIT – WELDT UCA REPAIR SLEEVE [274]	A/R	
2	335592	FLIGHTING – RH CENTER	1	
3	294425	SUPPORT – RH	6	
4	255883	PLATE	3	
5	174176	SUPPORT RH – DECAL ASSY [275]	1	
6	279926	BRACE – RH	1	
7	30934	FITTING – 1/4-28 TAPER THD	1	
8	132303	SHAFT – END WELDT, WITH DISC	1	
	294677	KIT – DISC 21-36 FT UCA (DISC ONLY) [276]	OPT	
9	174081	SHAFT – HEX	1	
10	172511	SUPPORT – CENTER HANGER ASSY [277]	1	
11	172507	BEARING – BALL HEX BORE	2	
12	21810	BUSHING – RUBBER	2	
13	174082	SPACER	1	
14	49306	FLANGE	1	
15	21859	BEARING – SPH OD EXT INNER RACE 1-3/16 BORE	1	
16	172340	SHIM	1	
17	30661	FLANGE	1	
18	233395	JOINT – UNIVERSAL	1	
19	45427	MOULDING – RH	1	
20	**335589**	**KIT – UCA CENTER SUPPORT REPAIR** [278]	**OPT**	
A	30228	NUT – FLG DT SMTH FACE 0.375-16 UNC		
B	135507	SCREW – MACHINE, TRUSS HD TORX, 38 NC X 1 LG		
C	19965	BOLT – RHSN 3/8-16 X 1-GR5-ZP		
D	101897	SCREW – HEX WASH HD THD ROLLING 3/8 NC X 3/4		
E	21491	BOLT – HH 1/2 NC X 1.25 LG GR 5 ZP		
F	18697	NUT – HEX LOCK DT .500-13 UNC		
G	18638	WASHER – REG. LOCK 1/2 IN. NOM. I.D. ZP		
H	21575	BOLT – HH 1/2 NC X 1.0 LG GR 5 ZP		
J	21578	BOLT – HH 1/2 NC X 2.25 LG GR 5 ZP		
K	21354	BOLT – HH 3/8 NC X 2.0 LG GR 5 ZP		
L	21854	BOLT – HH 1/4 NC X 2.5 LG GR 5 ZP		
M	18596	WASHER – SAE FLAT 9/32 I.D. X 5/8 IN. O.D. ZP		

274. The kit is for 2021 and prior upper cross augers that use hex shafts at the center support; intended to repair damage to the auger. Welding is required.
275. Includes decal (MD #174682).
276. Kit used to repair disc on shaft (MD #132303).
277. Includes two bearings (MD #172507) and two bushings (MD #21810).
278. Kit is used to upgrade the center support assembly on 2-piece upper cross augers. Replaces U-joint (MD #233395), center support (MD #172511), bearings (MD #172507), hex shaft (MD 174081), spacer (MD #174082), and hardware. Includes two repair sleeve kits (MD #NSS). Refer to Section *77 (Option) Upper Cross Auger – Center Support Repair Kit, page 233*.

(OPTION) UPPER CROSS AUGER – RIGHT END (D145) – 2021 AND PRIOR

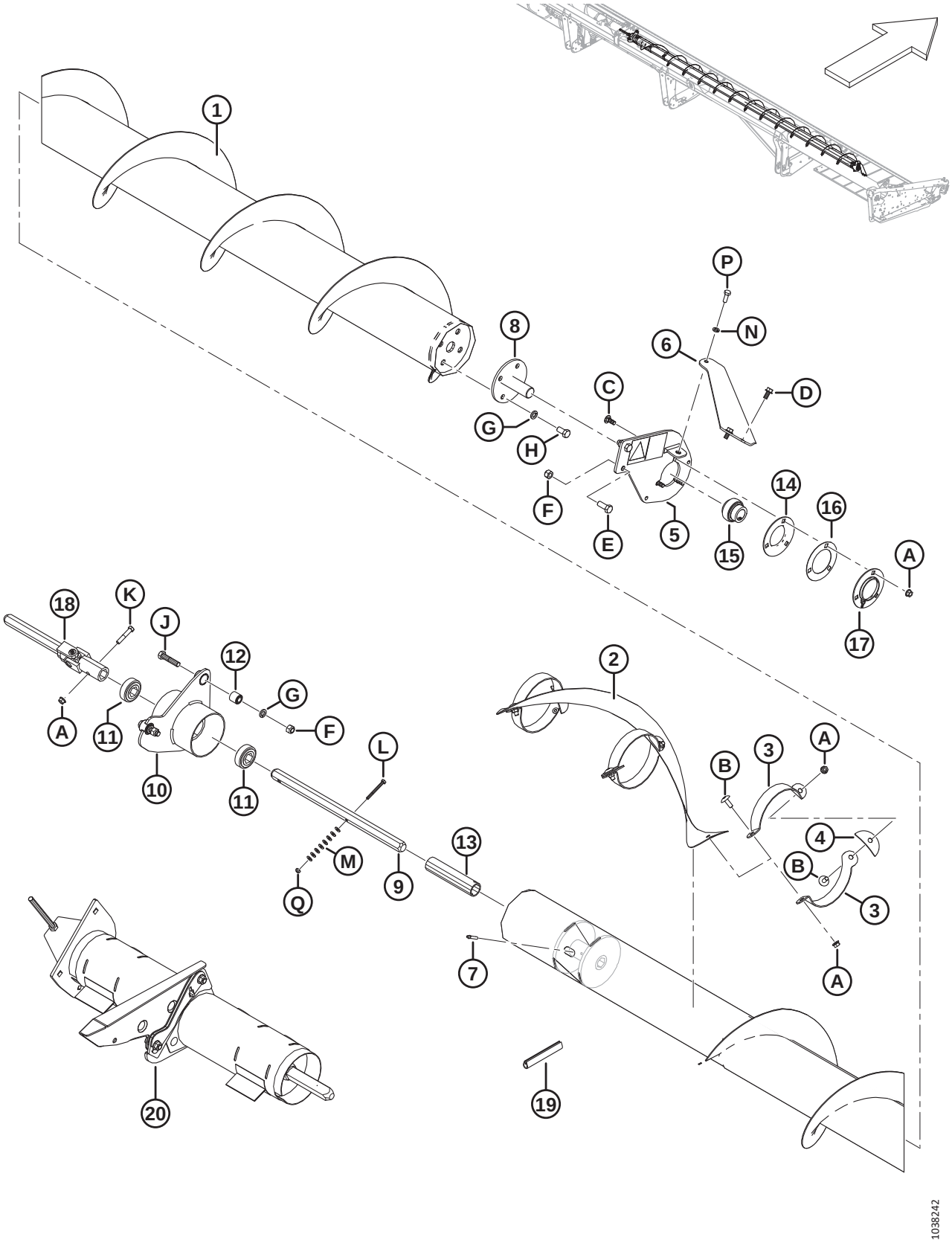

Ref	Part Number	Description	Qty	Serial Number
N	18637	WASHER – REG. LOCK 3/8 IN. NOM. I.D. ZP		
P	20077	BOLT – HEX HD 3/8 NC X 1.0 LG GR 5 ZP		
Q	18724	NUT – HEX LOCK DT 1/4-20 UNC ZP		

77 (Option) Upper Cross Auger – Center Support Repair Kit

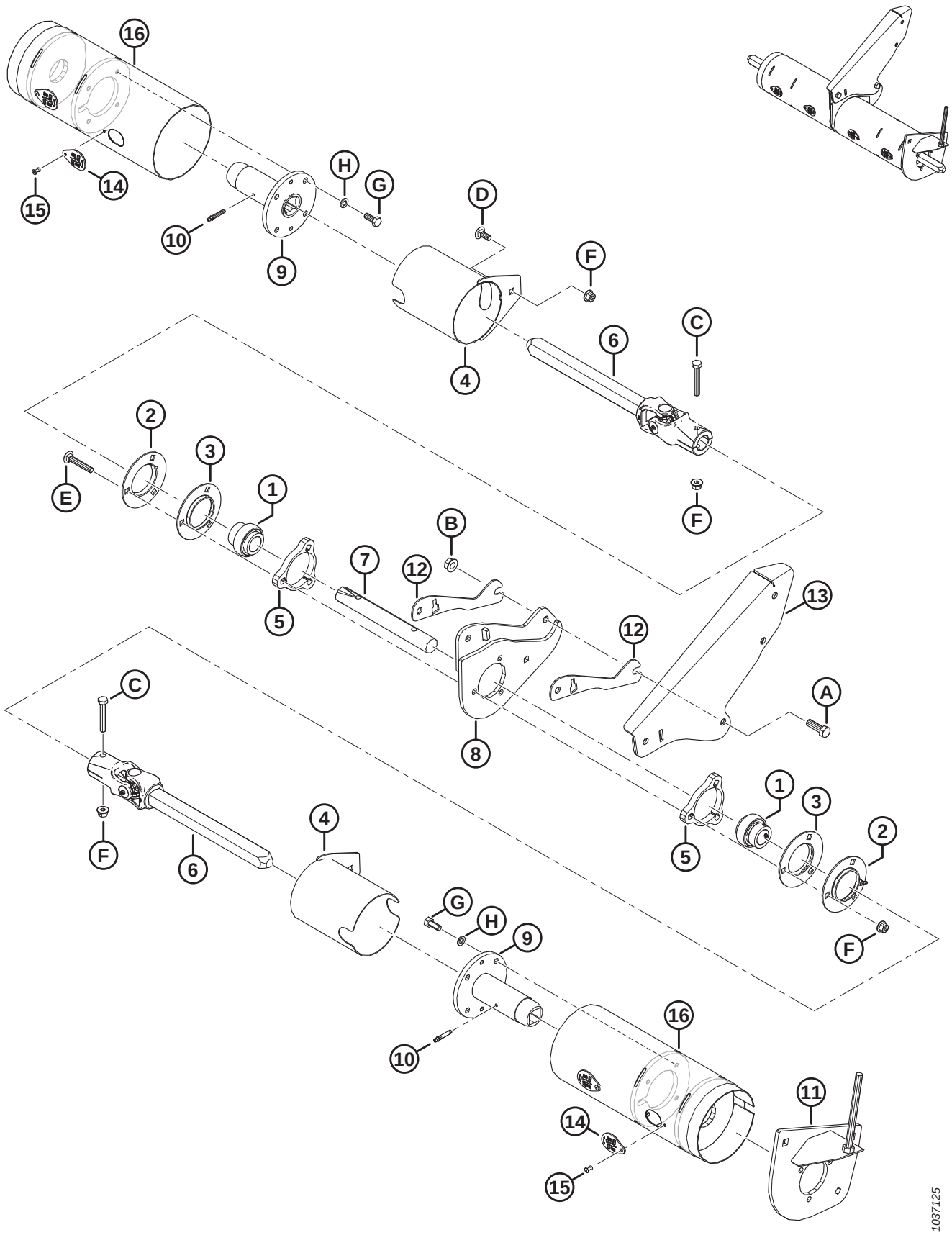

(OPTION) UPPER CROSS AUGER – CENTER SUPPORT REPAIR KIT

NOTE:

The UCA Center Support Repair kit (MD #335589) is used to upgrade upper cross augers that currently have center support assembly (MD #172511) and hex shafts installed. The new center support assembly included in this kit uses square shafts, which will improve shaft and hub life.

Ref	Part Number	Description	Qty	Serial Number
	335589	KIT – UCA CENTER SUPPORT REPAIR [279]		
1	21859	BEARING – SPH OD EXT INNER RACE 1 3/16 BORE	2	
2	30661	FLANGE	2	
3	49306	FLANGE	2	
4	233371	GUARD – WELDT	2	
5	233450	PLATE – SPACER	2	
6	233513	JOINT – UNIVERSAL	2	
7	233519	SHAFT	1	
8	335615	SUPPORT – BEARING MOUNT WELDT	1	
9	233514	HUB – WELDT UCA SLIDING	2	
10	30934	FITTING – 1/4-28 TAPER THD	2	
11	335610	SUPPORT – CENTER UCA [280]	1	
12	335625	SHIM – UCA CENTER SUPPORT	2	
13	335622	SUPPORT – SR CENTER WELDT [281]	1	
14	233625	COVER	4	
15	18768	RIVET – BLIND Ø0.188 IN. X 0.251 TO 0.375 GRIP RANGE	4	
16	NSS	AUGER – UCA HC REPAIR TUBE WELDT	2	
A	18723	BOLT – HEX HD 1/2-13 X 1.5 GR5-AA1J		
B	50186	NUT – FLG LK DT 1/2-13 UNC GR5 AA1J		
C	108172	BOLT – HEX HD M10 X 1.5 X 65-8.8-AA1J		
D	135785	BOLT – RHSN M10 X 1.5 X 25-8.8-AA1J		
E	136113	BOLT – RHSN M10 X 1.5 X 60-8.8-AA1J		
F	135799	NUT – HEX FLG CTR LOC M10 X 1.5-10		
G	30627	BOLT – HEX HD TFL M10 X 1.5 X 25-8.8-A3L		
H	30632	WASHER – LOCK SPRING M10		

279. Kit includes all listed parts and instructions.
280. Included in the kit but is not used on D1 headers; used on 972, 973, and 974 headers only.
281. Used on single-reel headers only.

78 (Option) Upper Cross Auger – Left End (D130, D135, and D140) – 2022

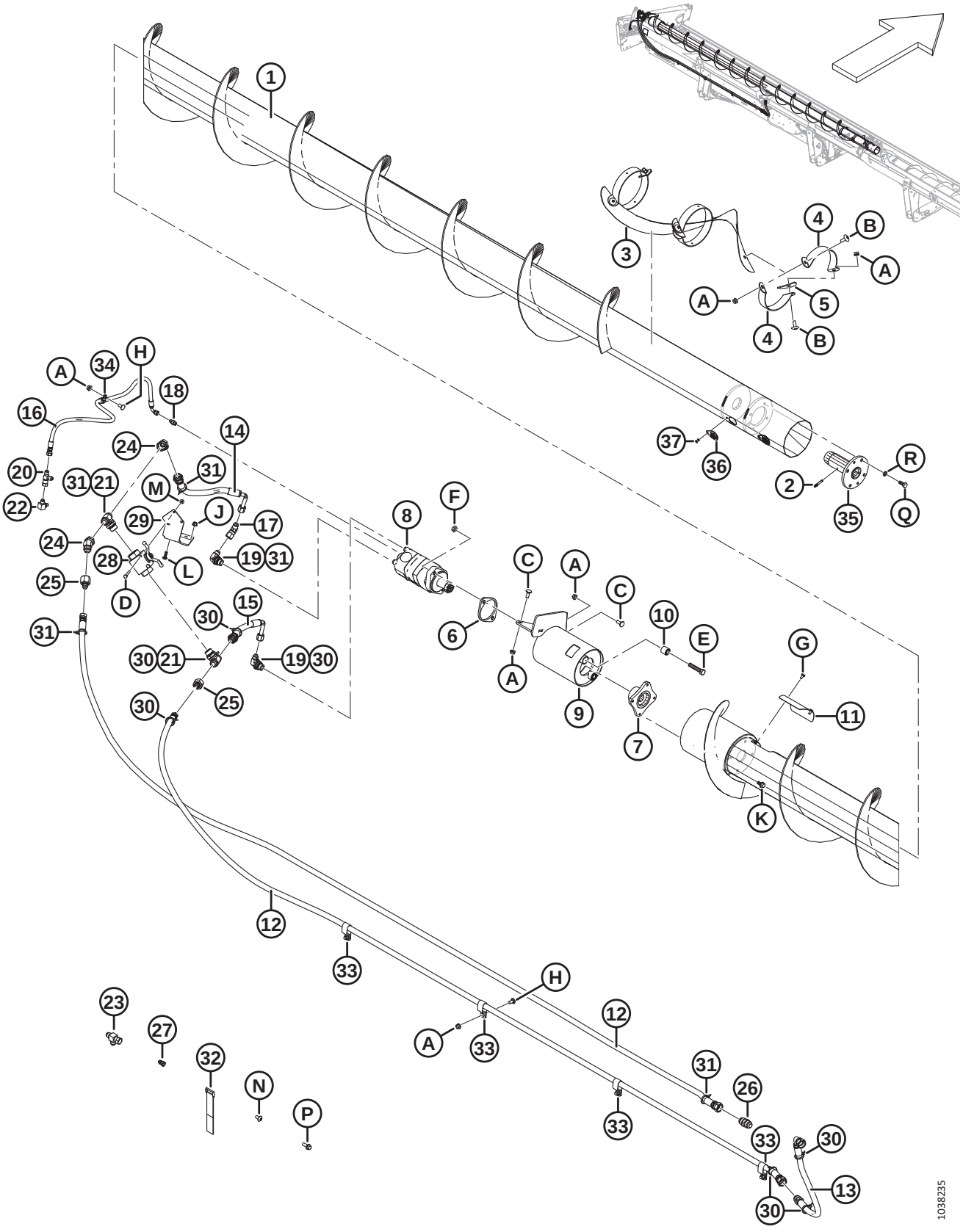

(OPTION) UPPER CROSS AUGER – LEFT END (D130, D135, AND D140) – 2022

Ref	Part Number	Description	Qty	Serial Number
	B9011	KIT – 1 SERIES 30 FT UCA (NORTH AMERICA) [282]		
	B9010	KIT – 1 SERIES 35 FT UCA (NORTH AMERICA) [282]		
	B9009	KIT – 1 SERIES 40 FT UCA (NORTH AMERICA) [282]		
	B9045	KIT – 1 SERIES COMBINE 30 FT UCA (EUROPE) [282]		
	B9046	KIT – 1 SERIES COMBINE 35 FT UCA (EUROPE) [282]		
	B9047	KIT – 1 SERIES COMBINE 40 FT UCA (EUROPE) [282]		
1	335336	AUGER – UCA SP LH WELDT 30 FT	1	
	335707	AUGER – UCA SP LH WELDT 35 FT	1	
	335478	AUGER – UCA SP LH WELDT 40 FT	1	
2	30934	FITTING – 1/4-28 TAPER THD	1	
3	335719	FLIGHTING – LH CENTER	1	
4	294424	SUPPORT – LH	6	
5	255883	PLATE	3	
6	253446	PLATE – SPACER	1	
7	253722	HUB – UCA HC MOTOR	1	
8	255829	MOTOR – UCA (130 CC) [283]	1	
	283002	MOTOR – EATON 2000 (100 CC) [284]	1	
	174304	SEAL KIT		
	137375	NUT – SLOTTED JAM 1.0-20 UNEF		
9	296556	SUPPORT – ASSEMBLY [285]	1	
10	21810	BUSHING – RUBBER	2	
11	279261	COVER – UCA ACCESS	1	
12	294221	HOSE – HYDRAULIC (30 FT)	2	
	294222	HOSE – HYDRAULIC (35 FT)	2	
	294223	HOSE – HYDRAULIC (40 FT)	2	
13	294226	HOSE – HYD, 0.5 IN. I.D., 800 MMLG, 100R17, METAL REIN.	2	
14	279716	HOSE – HYD, 0.5 IN. I.D., 400 MM LG, 100R17, METAL REIN.	1	
15	279717	HOSE – HYD, 0.5 IN. I.D., 270 MM LG, 100R17, METAL REIN.	1	
16	254248	HOSE – HYD, 0.25 IN. I.D., 900 MM LG, 100R17, METAL REINFORCED	1	
17	135685	FITTING – ELBOW 45° HYD	1	
18	112184	FITTING – ADAPTER HYD	1	
19	21801	FITTING – ELBOW 90° HYD	2	
20	30873	FITTING – HYD TEE	1	
21	50050	FITTING – TEE HYD STR THD BRANCH TEE CW O-RING	2	
22	50104	FITTING – ELBOW 90° HYD	1	
23	108268	FITTING – HYD TEE	1	
24	135240	FITTING – ELBOW 45° HYD	2	
25	136952	FITTING – ADAPTER HYD REDUCER	2	

282. Kits available through Whole Goods only.
283. For use on all SP headers and combine headers not in the European market.
284. For use in European market with increased UCA speed.
285. Includes two bushings (MD #21810) and decal (MD #279085).

(OPTION) UPPER CROSS AUGER – LEFT END (D130, D135, AND D140) – 2022

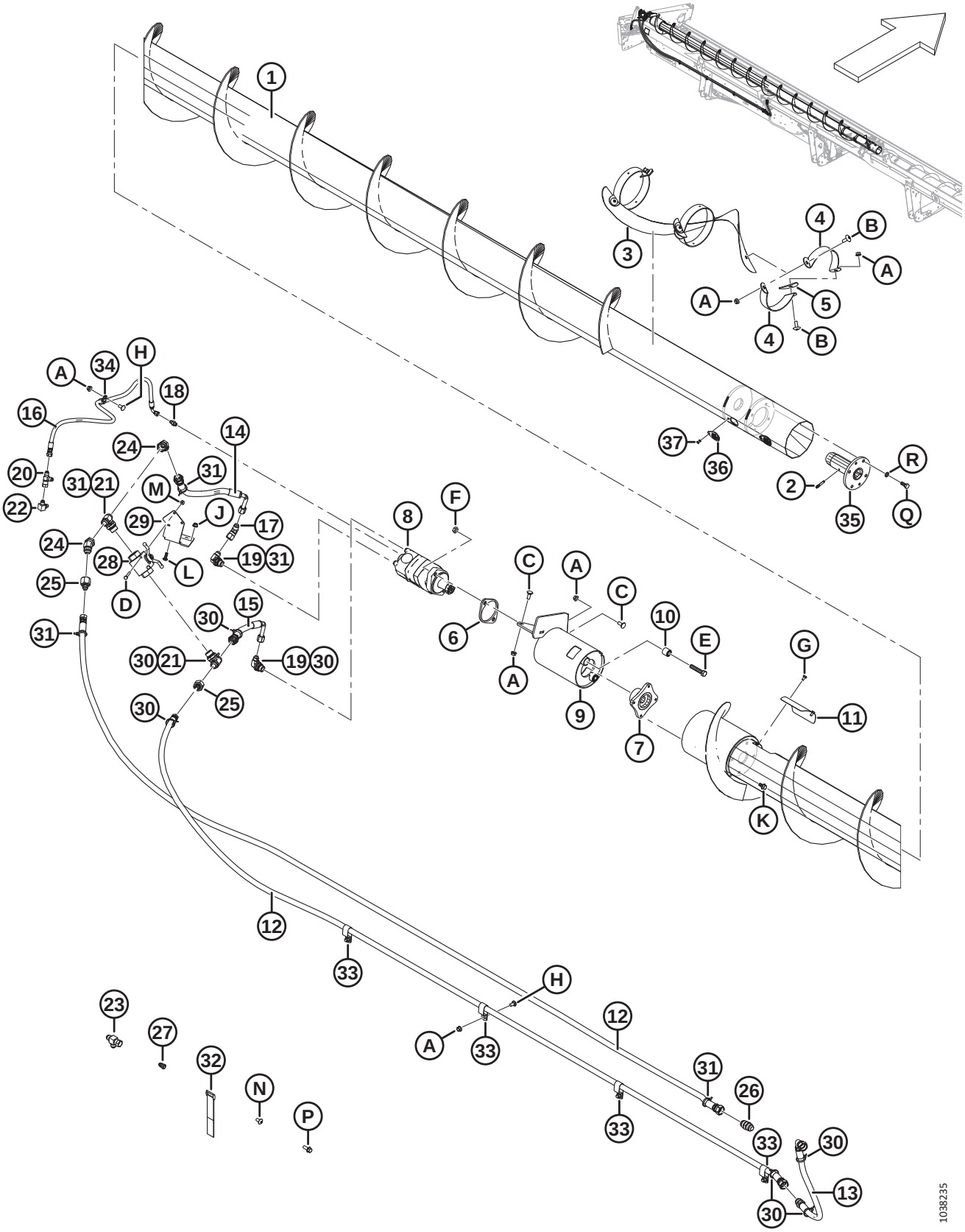

(OPTION) UPPER CROSS AUGER – LEFT END (D130, D135, AND D140) – 2022

Ref	Part Number	Description	Qty	Serial Number
26	30376	FITTING – UNION HYD	1	
27	30981	FITTING – ADAPTER HYD REDUCER 1/2 X 3/8 [286]	1	
	21069	NUT – TUBE 37° JIC 1/2 IN.	1	
28	294263	VALVE – BALL	1	
29	279966	BRACKET – BV MOUNT, RIGID	1	
30	252795	FASTENER – CABLE TIE, PINK	8	
31	252794	FASTENER – CABLE TIE, PURPLE	7	
32	135443	CINCH STRAP (4 IN. LG)	3	
	135444	CINCH STRAP (6 IN. LG)	2	
33	103738	CLAMP – PVC INSULATED 13/16 IN. TUBE SIZE	7	
34	135818	CLAMP – INSULATED 1/2 IN.	1	
35	233514	HUB – WELDT UCA SLIDING	1	
36	233625	COVER	2	
37	18768	RIVET – BLIND Ø0.188 IN. X 0.251 TO 0.375 GRIP RANGE	2	
A	30228	NUT – FLG DT SMTH FACE 0.375-16 UNC		
B	135507	SCREW – MACHINE, TRUSS HD TORX, 38 NC X 1 LG		
C	19965	BOLT – RHSN 3/8-16 X 1-GR5-ZP		
D	21854	BOLT – HH 1/4 NC X 2.5 LG GR 5 ZP		
E	21760	BOLT – HH 1/2 NC X 2.5 LG GR 5 ZP		
F	137727	NUT – HEX JAM-DT 1/2-13 UNC GR 5 ZP		
G	21580	BOLT – HEX HD 1/4 NC X 0.5 LG GR 5 ZP		
H	21863	BOLT – RHSSN 3/8 NC X 0.75 LG GR 5 ZP		
J	135248	NUT – HEX FLG CTR LOC		
K	135963	BOLT – HH FLG (SM FACE) 3/8 NC X 0.75 GR 5 ZP		
L	136824	BOLT – RHSSN M8 X 1.25 X 25-8.8-A2L		
M	135337	NUT – HEX FLG CTR LOC M8 X 1.25-8-A2L		
N	135157	SCREW – MACHINE		
P	135966	BOLT – HH FLG SM FACE 3/8 NC X 1.0 GR 5 ZP		
Q	30627	BOLT – HEX HD TFL M10 X 1.5 X 25-8.8-A3L		
R	30632	WASHER – LOCK SPRING M10		

286. Includes tube nut (MD #21069).

79 (Option) Upper Cross Auger – Right End (D130, D135, and D140) – 2022

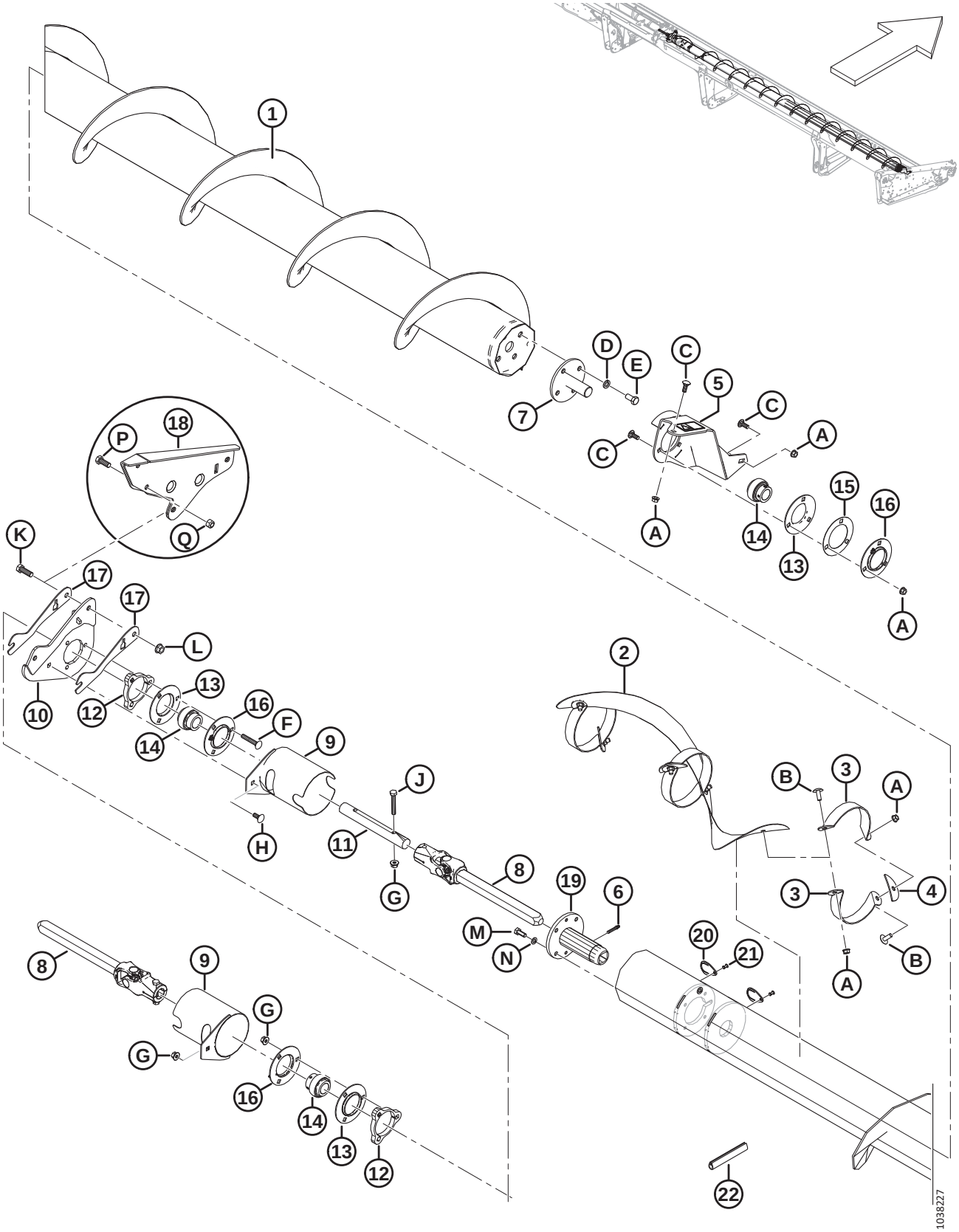

(OPTION) UPPER CROSS AUGER – RIGHT END (D130, D135, AND D140) – 2022

Ref	Part Number	Description	Qty	Serial Number
1	335337	AUGER – UCA RH WELDT 30 FT	1	
	335686	AUGER – UCA HC RH WELDT 35 FT	1	
	335480	AUGER – UCA HC RH WELDT 40 FT	1	
2	335592	FLIGHTING – RH CENTER	1	
3	294425	SUPPORT – RH	6	
4	255883	PLATE	3	
5	296554	SUPPORT – RH UCA ASSY [287]	1	
6	30934	FITTING – 1/4-28 TAPER THD	1	
7	132303	SHAFT – END WELDT	1	
	294677	KIT – DISC, UNPAINTED [288]		
8	233513	JOINT – UNIVERSAL	2	
9	233371	GUARD – WELDT	2	
10	335615	SUPPORT – BEARING MOUNT WELDT	1	
11	233519	SHAFT	1	
12	233450	PLATE – SPACER	2	
13	49306	FLANGE	3	
14	21859	BEARING – SPH OD EXT INNER RACE 1 3/16 BORE	3	
15	172340	SHIM	1	
16	30661	FLANGE	3	
17	335625	SHIM – UCA CENTER SUPPORT	2	
18	335622	SUPPORT – SR CENTER WELDT [289]	1	
19	233514	HUB – WELDT UCA SLIDING	1	
20	233625	COVER	2	
21	18768	RIVET – BLIND Ø0.188 IN. X 0.251 TO 0.375 GRIP RANGE	2	
22	45427	MOULDING – RH	1	
A	30228	NUT – FLANGE DT SMOOTH FACE 0.375-16 UNC		
B	135507	SCREW – MACHINE, TRUSS HD TORX, 3/8 NC X 1 LG		
C	19965	BOLT – RHSN 3/8-16 X 1-GR5-ZP		
D	18638	WASHER – REG. LOCK 1/2 IN. NOM. ID ZP		
E	21575	BOLT – HH 1/2 NC X 1.0 LG GR 5 ZP		
F	136113	BOLT – RHSN M10 X 1.5 X 60-8.8-AA1J		
G	135799	NUT – HEX FLG CTR LOC M10 X 1.5-10		
H	135785	BOLT – RHSN M10 X 1.5 X 25-8.8-AA1J		
J	108172	BOLT – HEX HD M10 X 1.5 X 65-8.8-AA1J		
K	18723	BOLT – HEX HD 1/2-13 X 1.5 GR5-AA1J		
L	50186	NUT – FLG LK DT 1/2-13 UNC GR5 AA1J		
M	30627	BOLT – HEX HD TFL M10 X 1.5 X 25-8.8-A3L		
N	30632	WASHER – LOCK SPRING M10		
P	21491	BOLT – HH 1/2 NC X 1.25 LG GR 5 ZP		
Q	18697	NUT – HEX LOCK DT .500-13UNC		

287. Includes warning decal (MD #279085).
288. Repair part for shaft (MD #132303).
289. Used on single-reel headers only.

80 (Option) Upper Cross Auger – Left End (D145) – 2022

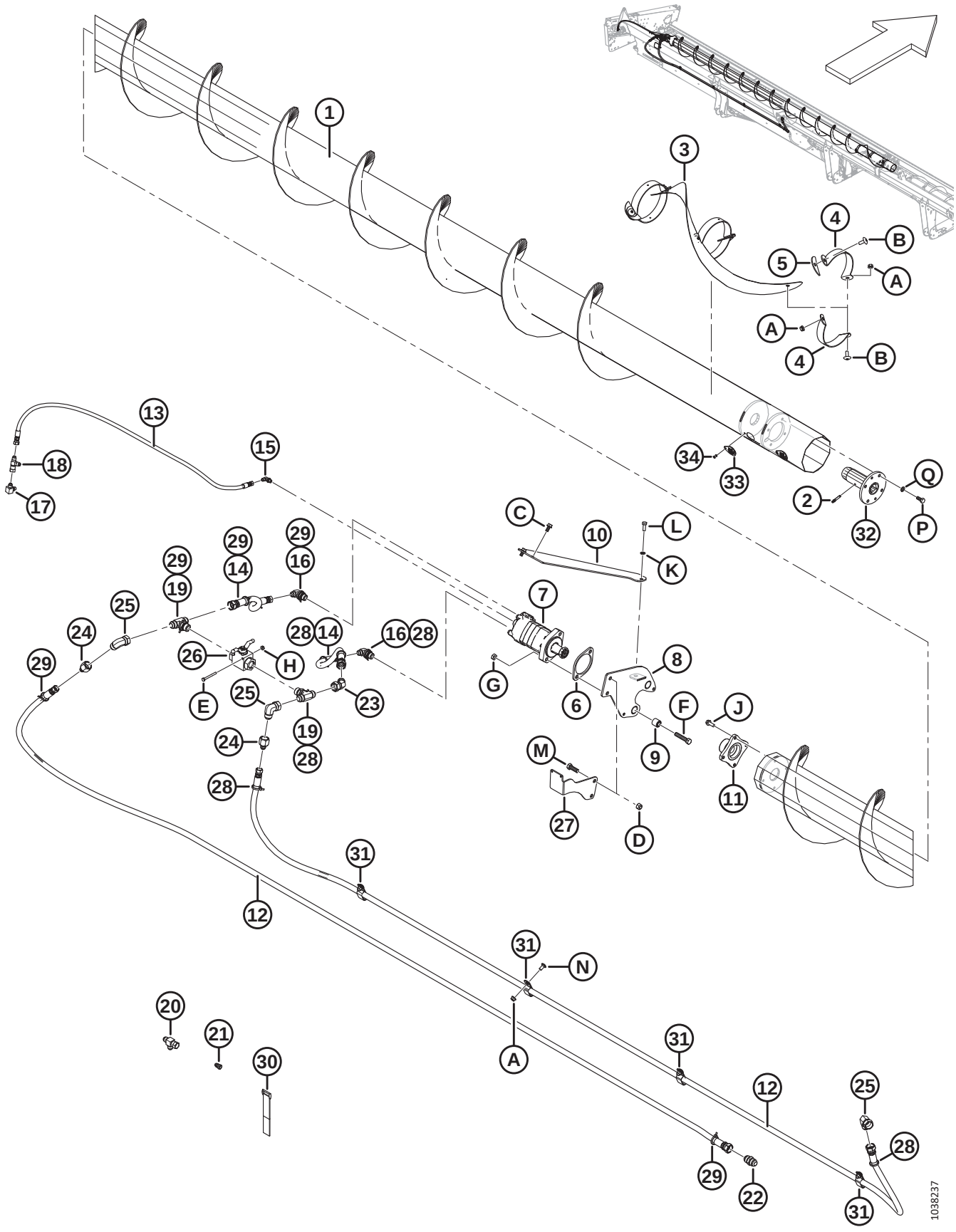

(OPTION) UPPER CROSS AUGER – LEFT END (D145) – 2022

Ref	Part Number	Description	Qty	Serial Number
	B9049	KIT – 1 SERIES 45 FT UCA (NORTH AMERICA) [290]		
	B9050	KIT – 1 SERIES EUROPEAN COMBINE 45 FT UCA [290]		
1	335600	AUGER – UCA LH WELDT 45 FT	1	
2	30934	FITTING – 1/4-28 TAPER THD	1	
3	335719	FLIGHTING – LH CENTER	1	
4	294424	SUPPORT – LH	6	
5	255883	PLATE	3	
6	253446	PLATE – SPACER	1	
7	255829	MOTOR – UCA (130 CC) [291]	1	
	283002	MOTOR – EATON 2000 (100 CC) [292]	1	
	174304	SEAL KIT		
	137375	NUT – SLOTTED JAM 1.0-20 UNEF		
8	174168	SUPPORT – LH HANGER ASSY [293]	1	
9	21810	BUSHING – RUBBER	2	
10	279925	BRACE – LH	1	
11	279775	HUB MACHINING	1	
12	294224	HOSE – HYDRAULIC (45 FT)	2	
13	294225	HOSE – HYDRAULIC (45 FT)	1	
14	279715	HOSE – HYD, 0.5 IN. I.D., 500 MM LG, 100R17, METAL REIN.	2	
15	135647	FITTING – ELBOW 90° HYD	1	
16	21801	FITTING – ELBOW 90° HYD	2	
17	50104	FITTING – ELBOW 90° HYD	1	
18	30873	FITTING – HYD TEE	1	
19	50050	FITTING – TEE HYD STR THD BRANCH TEE CW O-RING	2	
20	108268	FITTING – HYD TEE	1	
21	30981	FITTING – ADAPTER HYD REDUCER 1/2 X 3/8 [294]	1	
	21069	NUT – TUBE 37° JIC 1/2 IN.	1	
22	30376	FITTING – UNION HYD	1	
23	135240	FITTING – ELBOW 45° HYD	1	
24	136952	FITTING – ADAPTER HYD REDUCER	2	
25	50175	FITTING – ELBOW 90° HYD	2	
26	294263	VALVE – BALL	1	
27	279834	BRACKET – BALL VALVE MOUNT	1	
28	252795	FASTENER – CABLE TIE, PINK	6	
29	252794	FASTENER – CABLE TIE, PURPLE	5	
30	135443	CINCH STRAP (4 IN. LG)	3	
	135444	CINCH STRAP (6 IN. LG)	4	
31	103738	CLAMP – PVC INSULATED 13/16 IN. TUBE SIZE	7	

290. Kits available through Whole Goods only.
291. For use on all SP headers and combine headers not in the European market.
292. For use in European market with increased UCA speed.
293. Includes two bushings (MD #21810) and decal (MD #174682).
294. Includes tube nut (MD #21069).

(OPTION) UPPER CROSS AUGER – LEFT END (D145) – 2022

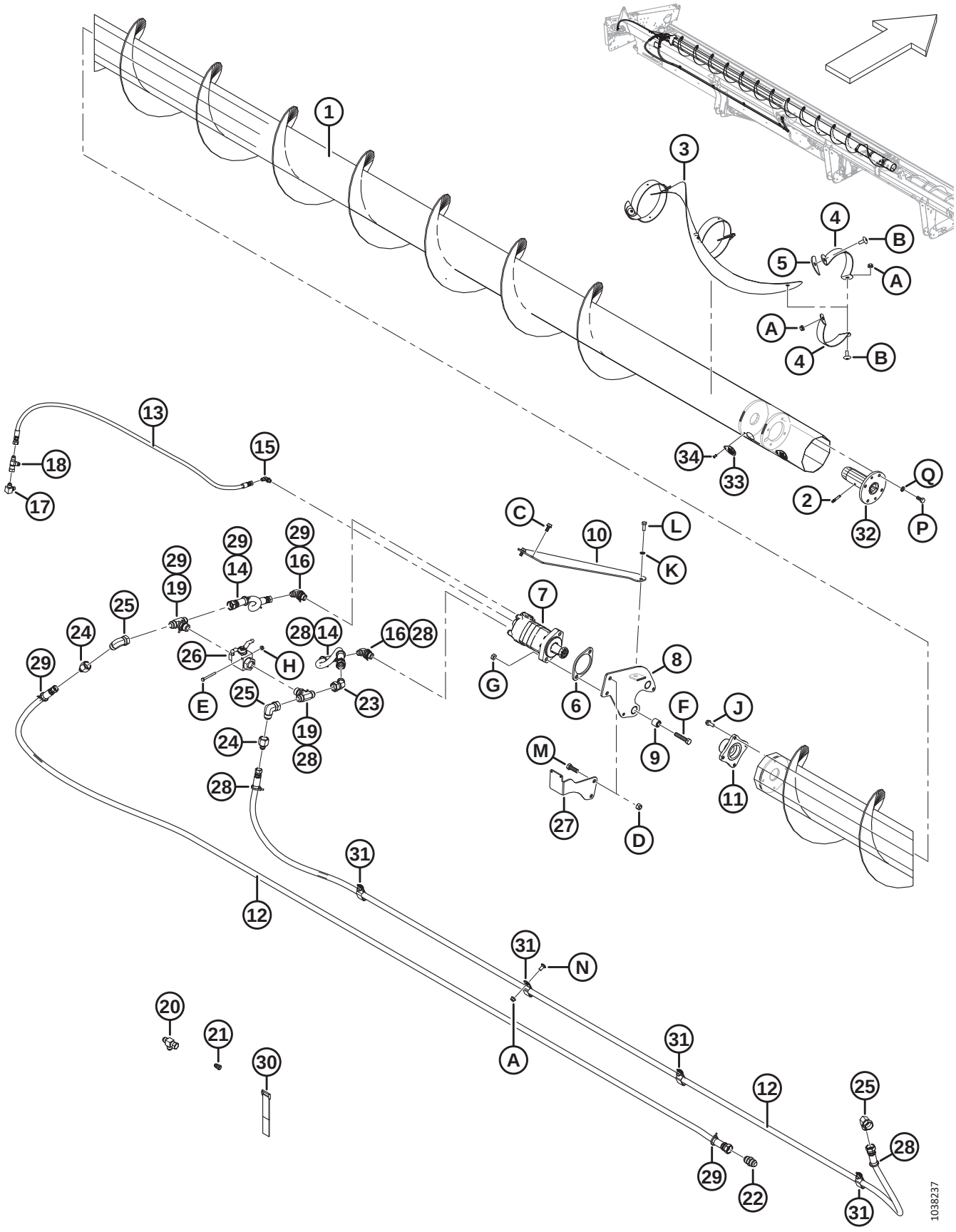

(OPTION) UPPER CROSS AUGER – LEFT END (D145) – 2022

Ref	Part Number	Description	Qty	Serial Number
32	**233514**	**HUB – WELDT UCA SLIDING**	**1**	
33	**233625**	**COVER**	**2**	
34	**18768**	**RIVET – BLIND Ø0.188 IN. X 0.251 TO 0.375 GRIP RANGE**	**2**	
A	**30228**	**NUT – FLG DT SMTH FACE 0.375-16 UNC**		
B	**135507**	**SCREW – MACHINE, TRUSS HD TORX, 38 NC X 1 LG**		
C	**101897**	**SCREW – HEX WASH HD THD ROLLING 3/8 NC X 3/4**		
D	**18697**	**NUT – HEX LOCK DT .500-13 UNC**		
E	**21854**	**BOLT – HH 1/4 NC X 2.5 LG GR 5 ZP**		
F	**21760**	**BOLT – HH 1/2 NC X 2.5 LG GR 5 ZP**		
G	**137727**	**NUT – HEX JAM-DT 1/2-13 UNC GR 5 ZP**		
H	**135248**	**NUT – HEX FLG CTR LOC**		
J	**135193**	**SCREW – HEX WASH HD THD ROLLING 3/8 NC X 1.0**		
K	**18637**	**WASHER – REG. LOCK 3/8 IN. NOM. I.D. ZP**		
L	**20077**	**BOLT – HEX HD 3/8 NC X 1.0 LG GR 5 ZP**		
M	**18723**	**BOLT – HH 1/2 NC X 1.5 LG TFL GR 5 ZP**		
N	**21863**	**BOLT – RHSSN 3/8 NC X 0.75 LG GR 5 ZP**		
P	**30627**	**BOLT – HEX HD TFL M10 X 1.5 X 25-8.8-A3L**		
Q	**30632**	**WASHER – LOCK SPRING M10**		

81 (Option) Upper Cross Auger – Right End (D145) – 2022

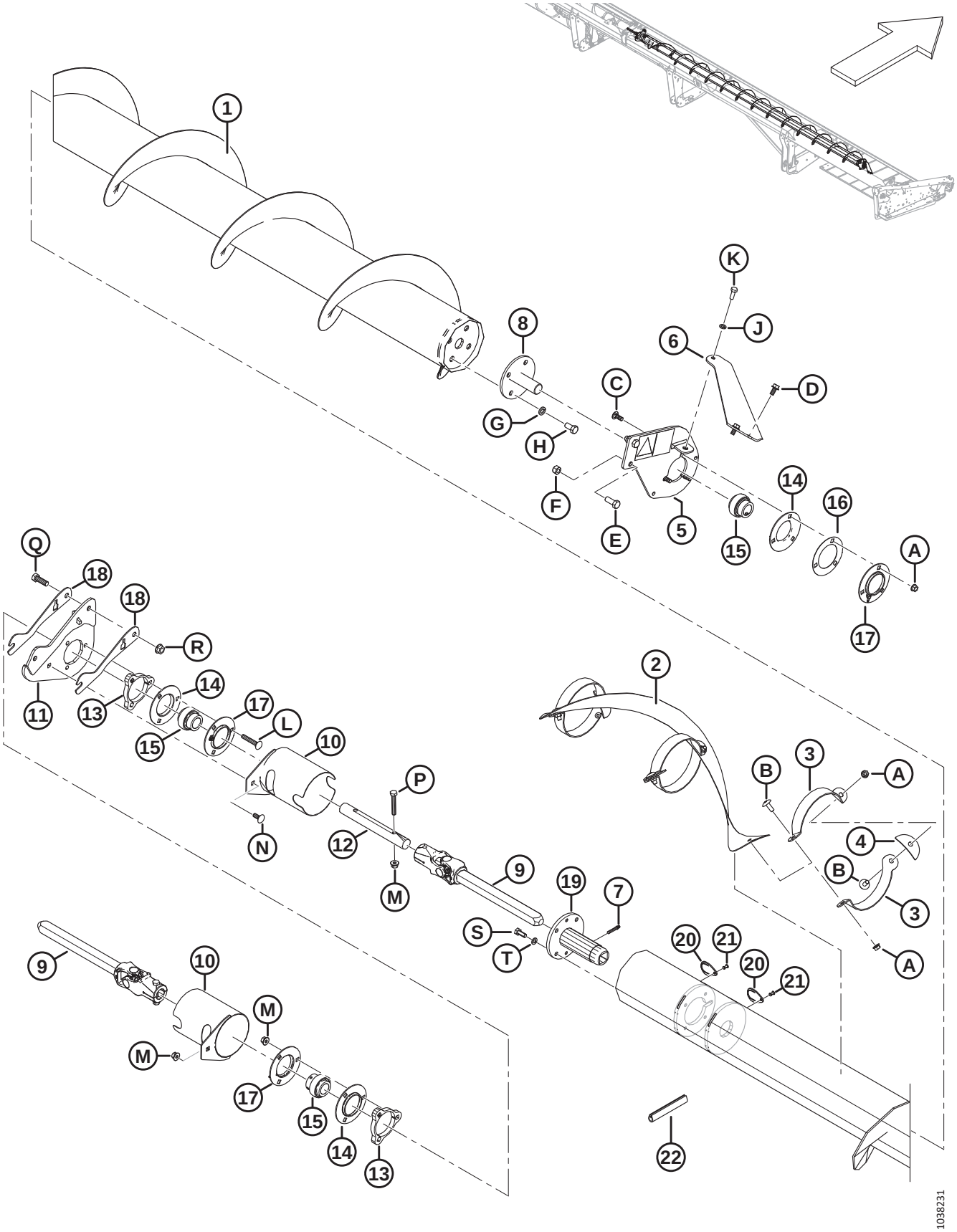

(OPTION) UPPER CROSS AUGER – RIGHT END (D145) – 2022

Ref	Part Number	Description	Qty	Serial Number
1	**335598**	**AUGER – UCA RH WELDT 45 FT**	**1**	
2	**335592**	**FLIGHTING – RH CENTER**	**1**	
3	**294425**	**SUPPORT – RH**	**6**	
4	**255883**	**PLATE**	**3**	
5	**174176**	**SUPPORT RH – DECAL ASSY**	**1**	
6	**279926**	**BRACE – RH**	**1**	
7	**30934**	**FITTING – 1/4-28 TAPER THD**	**1**	
8	**132303**	**SHAFT – END WELDT**	**1**	
	294677	**KIT – DISC, UNPAINTED** [295]		
9	**233513**	**JOINT – UNIVERSAL**	**2**	
10	**233371**	**GUARD – WELDT**	**2**	
11	**335615**	**SUPPORT – BEARING MOUNT WELDT**	**1**	
12	**233519**	**SHAFT**	**1**	
13	**233450**	**PLATE – SPACER**	**2**	
14	49306	**FLANGE**	**3**	
15	21859	**BEARING – SPH OD EXT INNER RACE 1 3/16 BORE**	**3**	
16	172340	**SHIM**	**1**	
17	30661	**FLANGE**	**3**	
18	**335625**	**SHIM – UCA CENTER SUPPORT**	**2**	
19	**233514**	**HUB – WELDT UCA SLIDING**	**1**	
20	**233625**	**COVER**	**2**	
21	**18768**	**RIVET – BLIND Ø0.188 IN. X 0.251 TO 0.375 GRIP RANGE**	**2**	
22	**45427**	**MOULDING – RH**	**1**	
A	**30228**	**NUT – FLANGE DT SMOOTH FACE 0.375-16 UNC**		
B	**135507**	**SCREW – MACHINE,TRUSS HD TORX,38NC X 1LG**		
C	**19965**	**BOLT – RHSN 3/8-16 X 1-GR5-ZP**		
D	**101897**	**SCREW – HEX WASH HD THD ROLLING 3/8 NC X 3/4**		
E	**21491**	**BOLT – HH 1/2 NC X 1.25 LG GR 5 ZP**		
F	**18697**	**NUT – HEX LOCK DT .500-13UNC**		
G	**18638**	**WASHER – REG. LOCK 1/2 IN. NOM. ID ZP**		
H	**21575**	**BOLT – HH 1/2 NC X 1.0 LG GR 5 ZP**		
J	**18637**	**WASHER – REG. LOCK 3/8 IN. NOM. ID ZP**		
K	**20077**	**BOLT – HEX HD 3/8 NC X 1.0 LG GR 5 ZP**		
L	**136113**	**BOLT – RHSN M10 X 1.5 X 60-8.8-AA1J**		
M	**135799**	**NUT – HEX FLG CTR LOC M10 X 1.5-10**		
N	**135785**	**BOLT – RHSN M10 X 1.5 X 25-8.8-AA1J**		
P	**108172**	**BOLT – HEX HD M10 X 1.5 X 65-8.8-AA1J**		
Q	**18723**	**BOLT – HEX HD 1/2-13 X 1.5 GR5-AA1J**		
R	**50186**	**NUT – FLG LK DT 1/2-13 UNC GR5 AA1J**		
S	**30627**	**BOLT – HEX HD TFL M10 X 1.5 X 25-8.8-A3L**		
T	**30632**	**WASHER – LOCK SPRING M10**		

295. Repair part for shaft (MD #132303).

82 (Option) Vertical Knife – Standard Reel Arm (2018 and Prior)

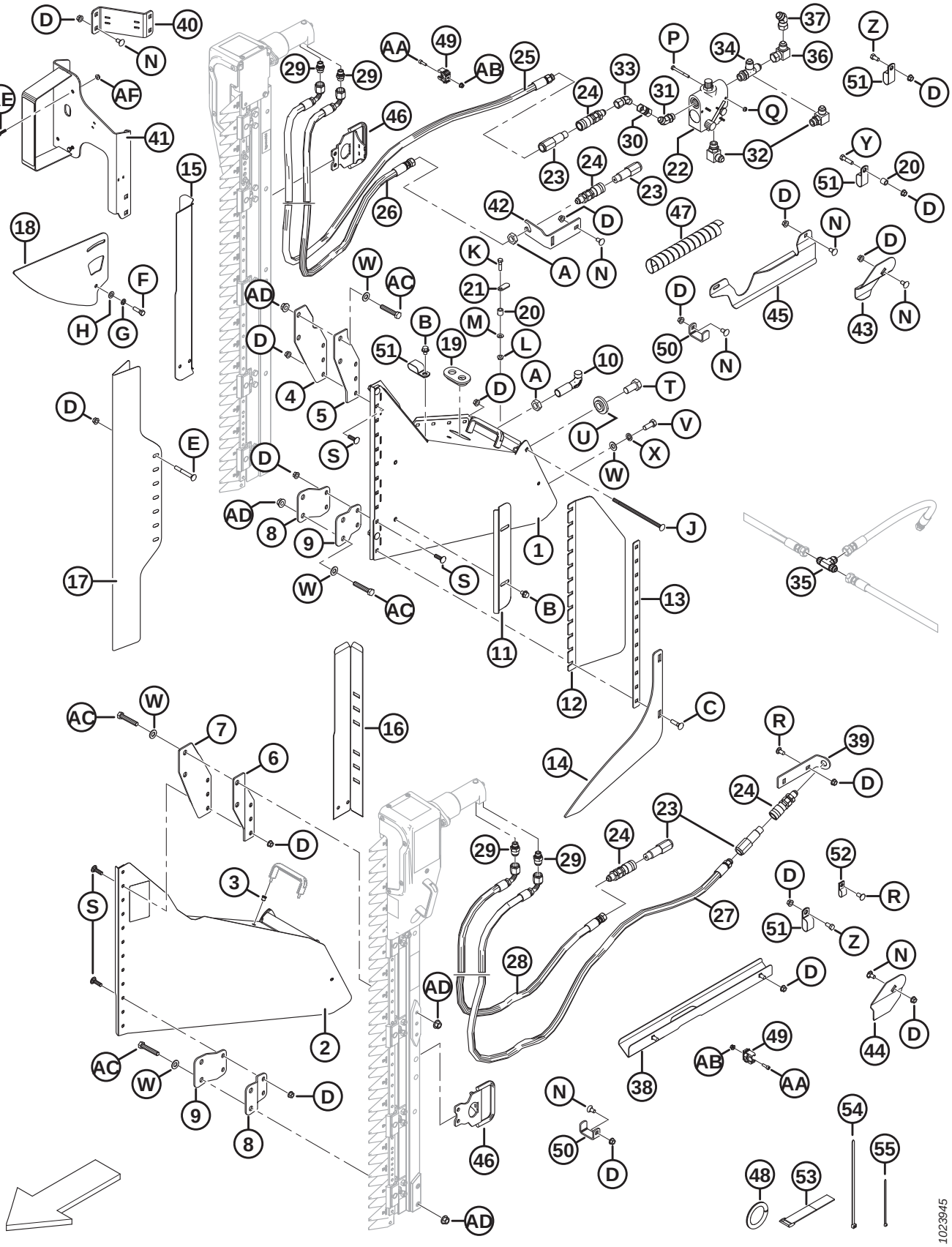

(OPTION) VERTICAL KNIFE – STANDARD REEL ARM (2018 AND PRIOR)

Ref	Part Number	Description	Qty	Serial Number
1	279494	SUPPORT ASSY – RH VERT KNIFE, C/W DECAL [296]	1	–346189
2	279485	SUPPORT ASSY – LH VERT KNIFE, C/W DECAL [296]	1	–346189
3	252578	RIVNUT – M6 X 1 RND 0.7-4.2	4	–346189
4	279156	SUPPORT – VK, TOP RH OUTBOARD	1	–346189
5	279157	SUPPORT – VK, TOP RH INBOARD	1	–346189
6	279158	SUPPORT – VK, TOP LH OUTBOARD	1	–346189
7	279159	SUPPORT – VK, TOP LH INBOARD	1	–346189
8	279498	SUPPORT – VK, BOTTOM, OUTBOARD	2	–346189
9	279499	SUPPORT – VK, BOTTOM, INBOARD	2	–346189
10	132773	HOOK – DIVIDER LATCH	2	–346189
11	174242	DEFLECTOR – VERTICAL KNIFE	2	–346189
12	174321	DEFLECTOR – PLASTIC VERTICAL KNIFE	2	–346189
13	174240	RETAINER – DEFLECTOR VERTICAL KNIFE	2	–346189
14	220197	LIFTER – VERTICAL KNIFE	2	–346189
15	174318	SHIELD – HOSES RH VERTICAL KNIFE	1	–346189
16	174322	SHIELD – HOSES LH VERTICAL KNIFE	1	–346189
17	165380	SHIELD – VERTICAL KNIFE	2	–346189
18	174238	GUIDE – TOP VERTICAL KNIFE	2	–346189
19	165103	GROMMET	2	–346189
20	174324	SPACER	3	–346189
21	174243	LEVER – SAFETY	2	–346189
22	174422	VALVE [297]	1	–346189
	30054	SEAL KIT		–346189
23	135386	COUPLER – MALE HYD. 3/8 IN. FLAT FACE [298]	4	–346189
	111978	SEAL KIT (FASTER ONLY)		–346189
24	135213	COUPLING – FEMALE HYD. 3/8 IN. FLAT FACE BULKHEAD	4	–346189
25	174262	HOSE – RH VERT. KNIFE PRESSURE, 3425 MM LG	1	–346189
26	174547	HOSE – RH VERTICAL KNIFE RETURN, 3350 MM LG	1	–346189
27	174263	HOSE – LH VERT. KNIFE PRESSURE, 3125 MM LG	1	–346189
28	174585	HOSE – LH VERTICAL KNIFE RETURN, 2750 MM LG	1	–346189
29	252296	FITTING – ADAPTER 10 JIC X 6 BSPP (ZIEGLER ONLY)	4	–346189
	136654	SEAL KIT (ZIEGLER ONLY)		–346189
	21746	FITTING – CONNECTOR HYD (SABRE ONLY)	4	–346189
30	135540	FITTING – FEMALE UNION HYD	1	–346189
31	135241	FITTING – ELBOW 45° HYD C/W O-RING	1	–346189
32	21843	FITTING – ELBOW 90° HYD	2	–346189
33	135685	FITTING – ELBOW 45° HYD	1	–346189
34	50019	FITTING – TEE HYD STR THD RUN TEE C/W O-RING	1	–346189
35	30551	FITTING – TEE HYD	1	–346189

296. Includes decal (MD #174684) and two rivnuts (MD #252578).
297. Includes seal kit (MD #30054).
298. Faster coupler (MD #135386) is interchangeable with Parker Hannifin coupler (NSS). Seal kit (MD #111978) is only intended for Faster coupler and cannot be used with Parker Hannifin coupler. Length can be used to differentiate the two couplers; Faster coupler = 101 mm and Parker Hannifin coupler = 84 mm.

(OPTION) VERTICAL KNIFE – STANDARD REEL ARM (2018 AND PRIOR)

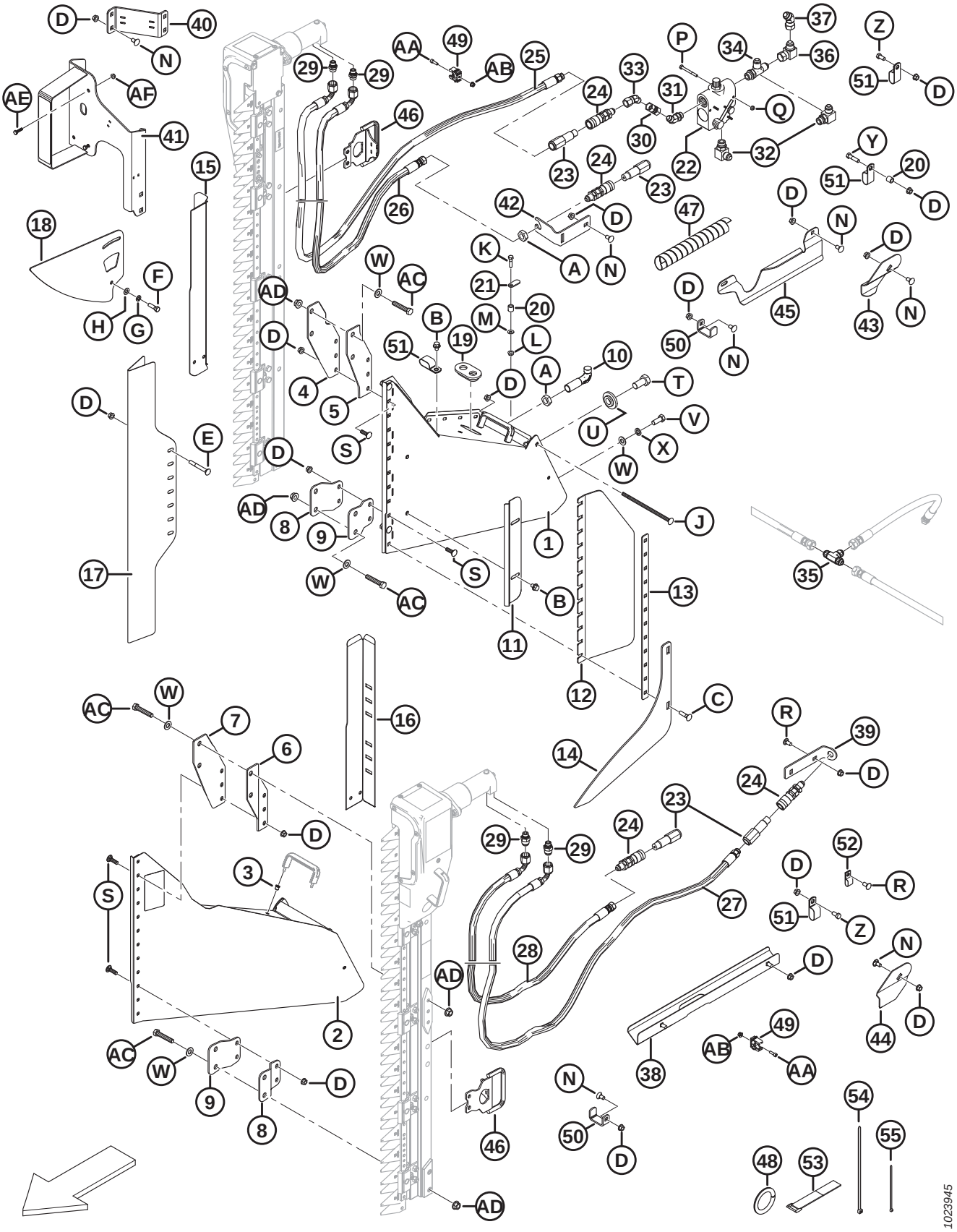

Ref	Part Number	Description	Qty	Serial Number
36	30556	FITTING – ELBOW 90° HYD	1	–346189
37	135434	FITTING – ELBOW 45° SWIVEL SAE	1	–346189
38	174586	SUPPORT WELDMENT – LH VERTICAL KNIFE	1	–346189
39	174538	SUPPORT – HOSE LH VERTICAL KNIFE	1	–346189
40	174883	SUPPORT – LAMP, VERTICAL KNIFE KIT	1	–346189
41	294393	SUPPORT – RH REAR LIGHT VERT KNIFE	1	–346189
42	174521	SUPPORT – COUPLER	1	–346189
43	174514	HOLDER – RH HOSE VERTICAL KNIFE	1	–346189
44	174513	HOLDER – LH HOSE VERTICAL KNIFE	1	–346189
45	125229	GUIDE – RH HOSES, VERT KNIFE	1	–346189
46	279144	HANDLE – VERT KNIFE (ZIEGLER ONLY)	2	–346189
47	252537	GUARD – HOSE, SPIRAL	1	–346189
48	45427	MOULDING – RH (SPEC 31886)	1	–346189
49	252314	CLIP – PIPE, 20 MM	8	–346189
50	132418	CLAMP – HOSE VERTICAL KNIFE	3	–346189
51	103738	CLAMP – PVC INSULATED 13/16 IN. TUBE SIZE	13	–346189
52	135233	CLAMP – DOUBLE HOSE INSULATED	1	–346189
53	135443	FASTENER – CINCH STRAP 4 IN. LG	3	–346189
54	30753	FASTENER – CABLE TIE BLACK, 305 MM LG	6	–346189
55	21763	FASTENER – CABLE TIE BLACK, 160 MM LG	10	–346189
A	7674	NUT – HEX JAM 3/4 16 UNF GR 5 ZP		
B	30693	BOLT – FLANGE (SER FACE) .375-16 UNC X 0.5 LG		
C	21484	BOLT – RHSN 3/8 NC X 1.5 LG GR 5 ZP		
D	30228	NUT – FLANGE DT SMOOTH FACE 0.375-16 UNC		
E	30307	BOLT – RHSN 3/8 NC X 3.0 LG GR 5 ZP		
F	21264	BOLT – HH 3/8 NC X 1.25 LG GR 5 ZP		
G	18637	WASHER – REG. LOCK 3/8 IN. NOM. ID ZP		
H	18598	WASHER – SAE FLAT 13/32 ID X 13/16 IN OD ZP		
J	135665	BOLT – RHSN 3/8 NC X 8 LG GR 5 ZP		
K	21526	BOLT – HH 5/16 NC X 1.25 LG GR 5 ZP		
L	30280	NUT – FLG SIDE LK SMTH FACE 5/16 NC GR 5 ZP		
M	184579	WASHER – CONICAL SPRING M8A		
N	21472	BOLT – RHSN 3/8 NC X 0.75 GR 5 ZP		
P	21854	BOLT – HH 1/4 NC X 2.5 LG GR 5 ZP		
Q	18724	NUT – HEX LOCK DT 1/4-20 UNC ZP		
R	21863	BOLT – RHSSN 3/8 NC X 0.75 LG GR 5 ZP		
S	19966	BOLT – RHSN 3/8 NC X 1.25 LG GR 5 ZP		
T	135579	BOLT – HEX HD 3/4-16 UNF		
U	220324	WASHER – VERTICAL KNIFE		
V	21491	BOLT – HH 1/2 NC X 1.25 LG GR 5 ZP		
W	18599	WASHER – SAE FLAT 17/32 ID X 1 1/16 IN OD ZP		
X	18638	WASHER – REG. LOCK 1/2 IN. NOM. ID ZP		

(OPTION) VERTICAL KNIFE – STANDARD REEL ARM (2018 AND PRIOR)

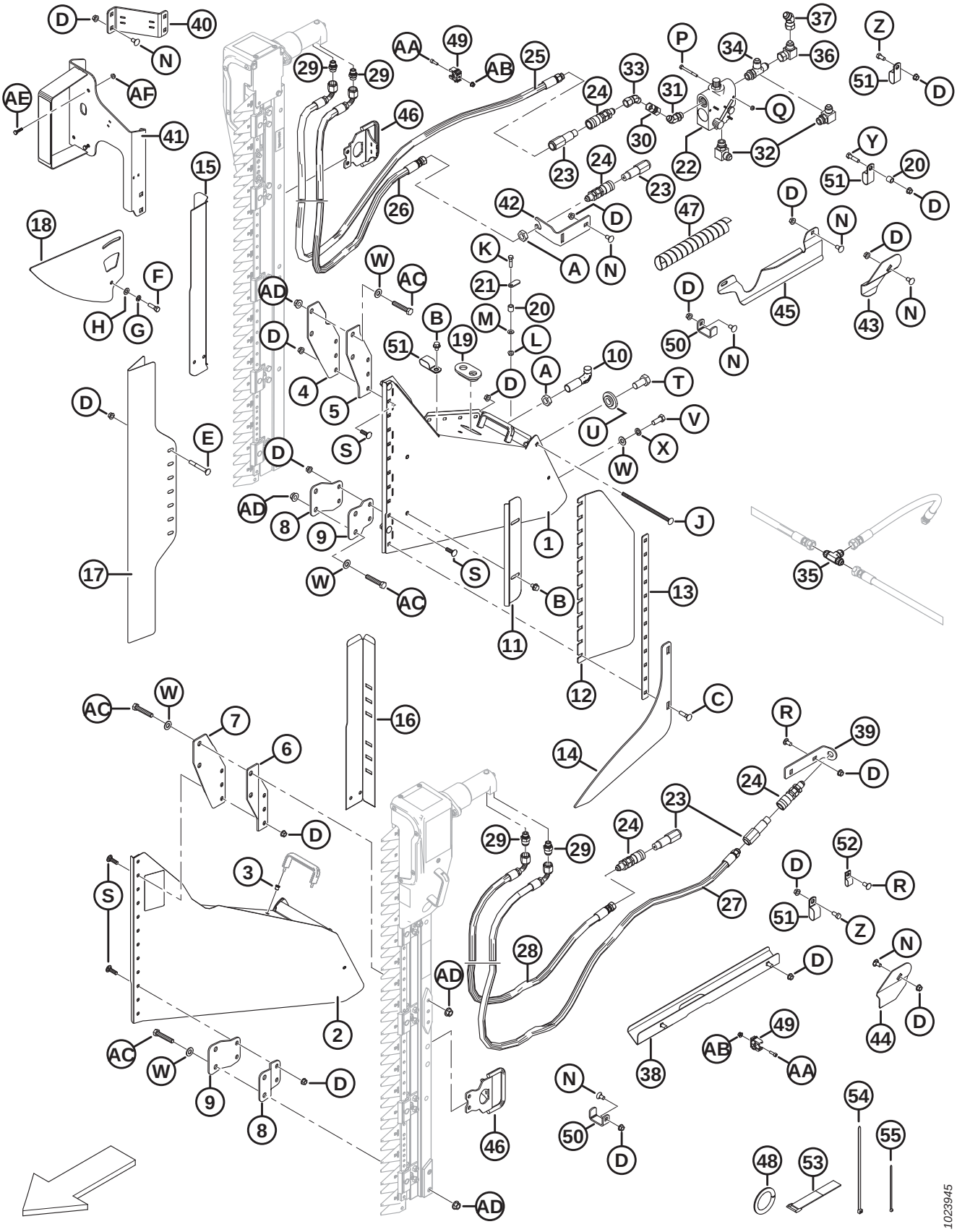

Ref	Part Number	Description	Qty	Serial Number
Y	21561	BOLT – HH 3/8 NC X 1.5 LG GR 5 ZP		
Z	21567	BOLT – HEX HD .375-16 UNC X 0.75 LG		
AA	136652	SCREW – HEX SOC HD M6 X 1 X 20-12.9-A2L		
AB	152668	NUT – HEX FLG CTR LOC M6 X 1-8-A2L		
AC	252541	BOLT – HEX HD M12 X 1.75 X 65-8.8-A3L		
AD	148645	NUT – HEX FLG STVR LOC M12 X 1.75-10-A3L		
AE	21573	BOLT – HEX HD 1/4 NC X 1.0 LG GR 5 ZP		
AF	21455	NUT – FLG (SER FACE) 1/4 NC GR 5 ZP		

83 (Option) Vertical Knife – Standard Reel Arm, Left End (2019–2021)

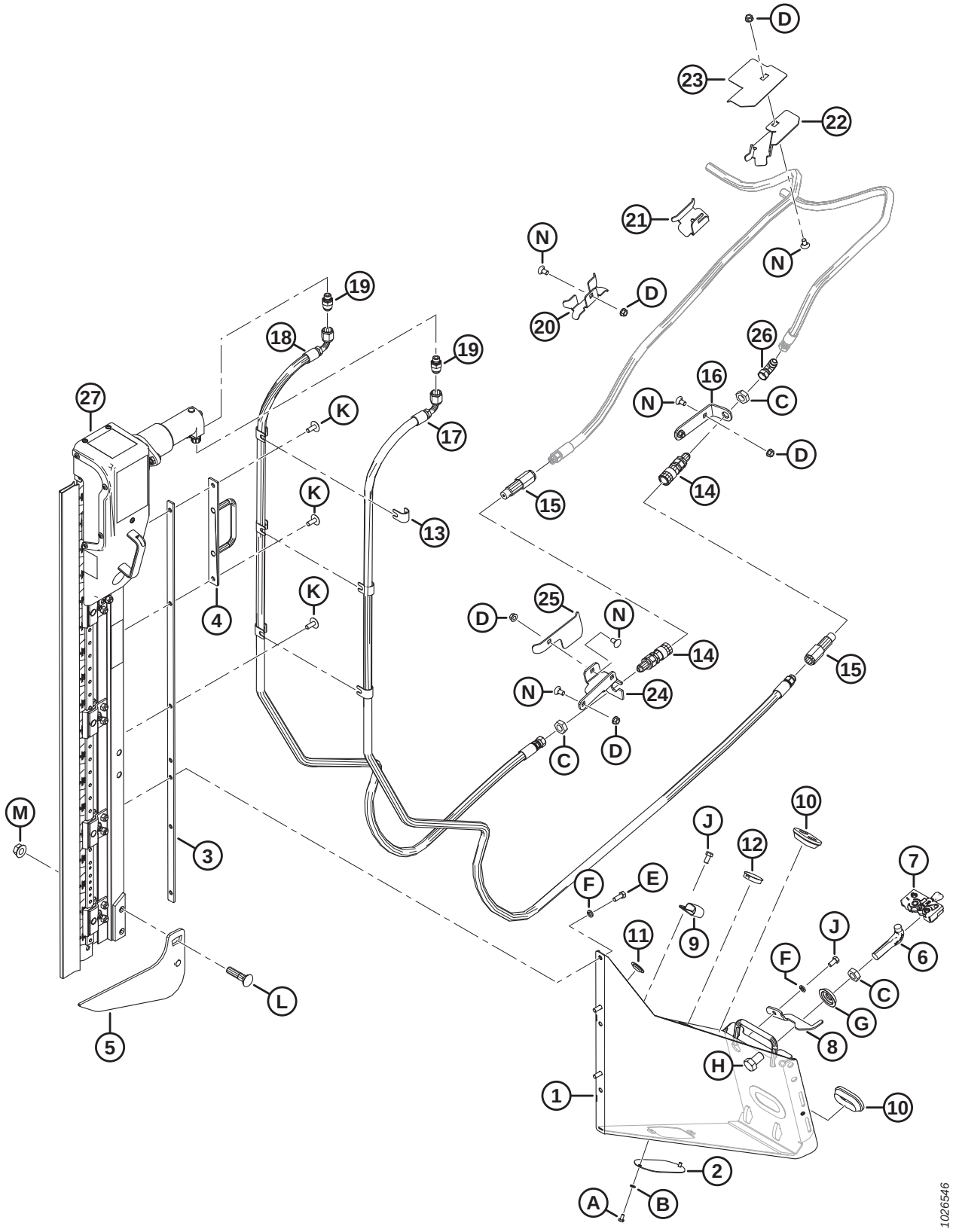

Ref	Part Number	Description	Qty	Serial Number
	B6410	KIT – ZIEGLER LH/RH VERTICAL KNIFES FOR D1/FD1 [299]		346190–
1	**REF**	SUPPORT ASSEMBLY – LH NA [300]	1	346190–421189
	335869	**KIT – VERTICAL KNIFE MOUNTS** [301]		
2	253582	PLATE	1	346190–421189
3	253668	SUPPORT WELDMENT	1	346190–421189
4	253570	SUPPORT WELDMENT	1	346190–421189
5	253708	LIFTER LEFT WELDMENT	1	346190–421189
6	132773	HOOK – DIVIDER LATCH	1	346190–421189
7	120932	LATCH – LH	1	346190–421189
8	132248	LATCH – LH, DIVIDER SAFETY	1	346190–421189
9	103738	CLAMP – PVC INSULATED 13/16 IN. TUBE SIZE	1	346190–421189
10	165103	GROMMET	2	346190–421189
11	30433	PLUG – PLASTIC SNAP-IN	2	346190–421189
12	135613	PLUG – PLASTIC SNAP-IN	1	346190–421189
13	279798	SUPPORT	6	346190–421189
14	135213	COUPLING – FEMALE HYD. 3/8 FLAT FACE BULKHEAD	2	346190–421189
15	135386	COUPLER – MALE HYD. 3/8 IN. FLAT FACE (FASTER) [302]	2	346190–421189
	111978	SEAL KIT – 3/8 MALE (FASTER ONLY)		346190–421189
16	245915	SUPPORT – HOSE COUPLER	1	346190–421189
17	294985	HOSE – HYD	1	346190–421189
18	294508	HOSE – HYD	1	346190–421189
19	252296	FITTING – ADAPTER-10 JIC X-6 BSPP	2	346190–421189
20	245931	SUPPORT – HOSE	1	346190–421189
21	245956	SUPPORT – HOSE	1	346190–421189
22	253702	SUPPORT – HOSE, LH	1	346190–421189
23	253704	GUIDE – HOSE, LH	1	346190–421189
24	245928	SUPPORT – LH COUPLER	1	346190–421189
25	245936	DEFLECTOR – LH HOSE	1	346190–421189
26	30314	FITTING – ELBOW 90° HYD	1	346190–421189
27	NSS	ZIEGLER VERTICAL KNIFE [303]		346190–421189
A	21580	BOLT – HEX HD 1/4 NC X 0.5 LG GR 5 ZP		
B	18635	WASHER – REG. LOCK 1/4 IN. NOM. ID ZP		
C	7674	NUT – HEX JAM 3/4-16 UNF GR 5 ZP		

299. Kit includes two knives. Kits available through Whole Goods only.
300. If replacing the LH support assembly, order the Vertical Knife Mounts kit (MD #335869). The vertical knife mounts have a new design, and the kit includes both LH and RH mounts, hoses, and hardware required to convert to the new configuration.
301. Includes both LH and RH mounts, hoses, and hardware required to convert to the new configuration.
302. Faster coupler (MD #135386) is interchangeable with Parker Hannifin coupler (NSS). Seal kit (MD #111978) is only intended for Faster coupler and cannot be used with Parker Hannifin coupler. Length can be used to differentiate the two couplers; Faster coupler = 101 mm and Parker Hannifin coupler = 84 mm.
303. Not sold separately, can be ordered as a set of two knives (MD #B6410). For service parts, refer to Section *90 (Option) Vertical Knife Assembly – Service Parts, page 281*.

(OPTION) VERTICAL KNIFE – STANDARD REEL ARM, LEFT END (2019–2021)

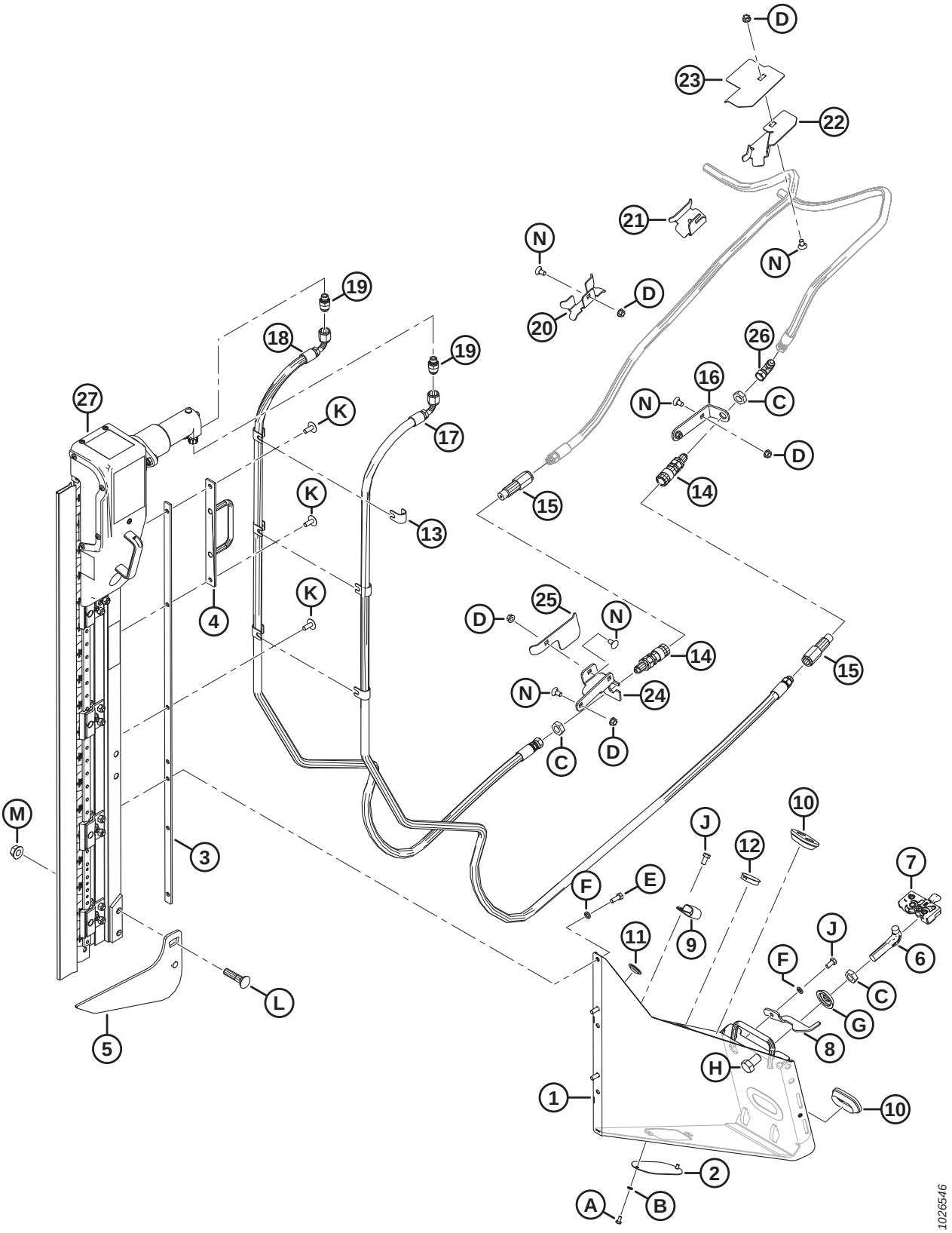

Ref	Part Number	Description	Qty	Serial Number
D	30228	NUT – FLANGE DT SMOOTH FACE 0.375-16 UNC		
E	20077	BOLT – HEX HD 3/8 NC X 1.0 LG GR 5 ZP		
F	18637	WASHER – REG. LOCK 3/8 IN. NOM. ID ZP		
G	253477	WASHER – VERTICAL KNIFE		
H	21590	BOLT – HH 3/4 NC X 1.25 LG GR 5 ZP		
J	21567	BOLT – HEX HD .375-16 UNC X 0.75 LG		
K	135507	SCREW – MACHINE TRUSS HD TORX, 38 NC X 1 LG		
L	30759	BOLT – RHSSN 5/8 NC X 2.5 LG GR 5 ZP		
M	50225	NUT – FLANGE DT SMOOTH FACE .625-11 UNC		
N	21472	BOLT – RHSN 3/8-16 X .75-GR5		

84 (Option) Vertical Knife – Standard Reel Arm, Right End (2019–2021)

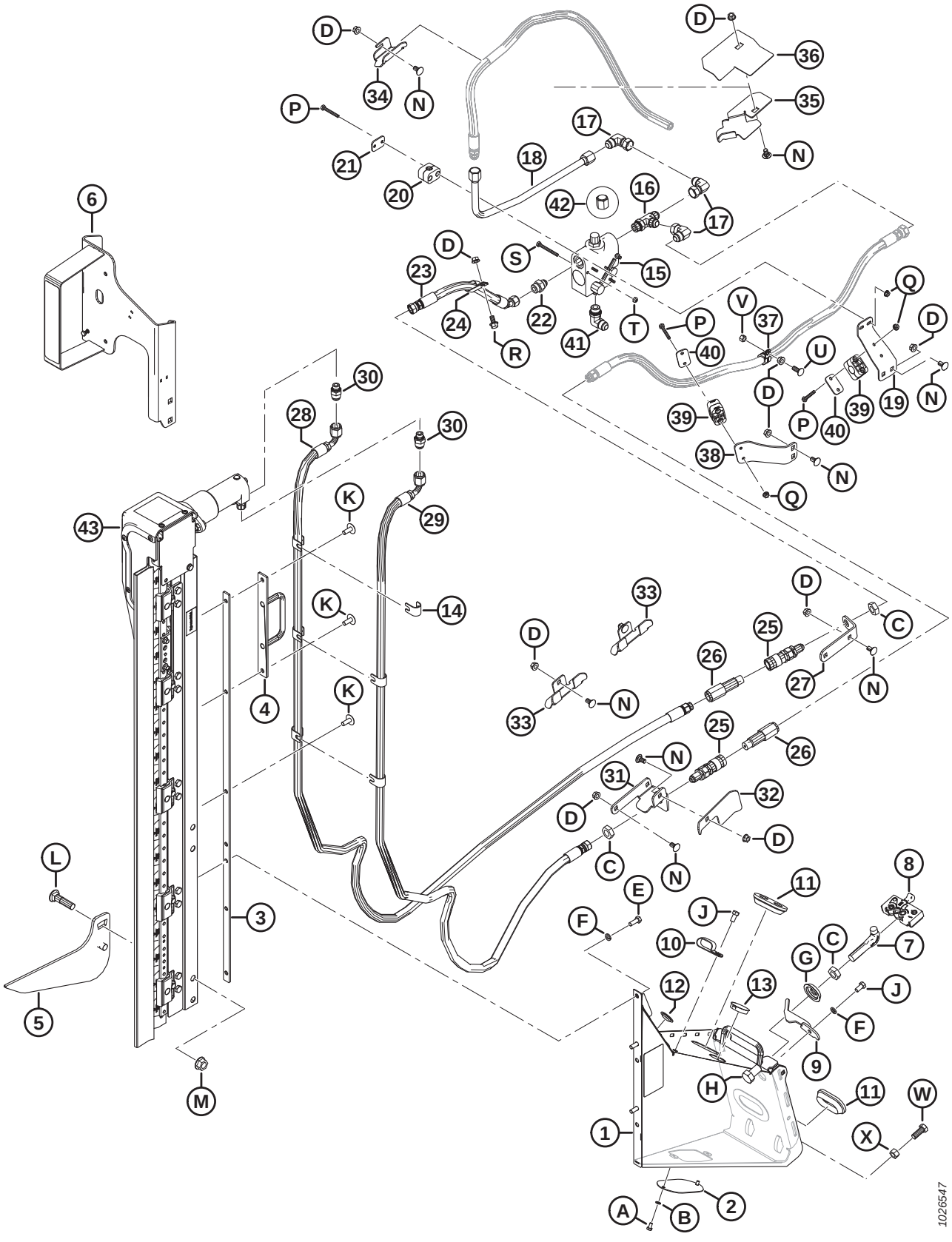

Ref	Part Number	Description	Qty	Serial Number
	B6410	KIT – ZIEGLER LH/RH VERTICAL KNIFES FOR D1/FD1 [304]		346190–
1	**REF**	SUPPORT ASSEMBLY – RH NA [305]	1	346190–421189
	335869	**KIT – VERTICAL KNIFE MOUNTS** [306]		
2	253582	PLATE	1	346190–421189
3	253668	SUPPORT WELDMENT	1	346190–421189
4	253570	SUPPORT WELDMENT	1	346190–421189
5	253709	LIFTER RIGHT WELDMENT	1	346190–421189
6	294393	SUPPORT – RH LIGHT VERT KNIFE	1	346190–421189
	115146	REFLECTOR – AMBER		346190–421189
	115147	REFLECTOR – RED		346190–421189
7	132773	HOOK – DIVIDER LATCH	1	346190–421189
8	120933	LATCH – RH	1	346190–421189
9	132253	LATCH – RH, DIVIDER SAFETY	1	346190–421189
10	103738	CLAMP – PVC INSULATED 13/16 IN. TUBE SIZE	7	346190–421189
11	165103	GROMMET	2	346190–421189
12	30433	PLUG – PLASTIC SNAP-IN	2	346190–421189
13	135613	PLUG – PLASTIC SNAP-IN	1	346190–421189
14	279798	SUPPORT	6	346190–421189
15	174422	VALVE	1	346190–421189
	30054	SEAL KIT		346190–421189
16	50019	FITTING – TEE HYD STR THD RUN TEE CW O-RING	1	346190–421189
17	30556	FITTING – ELBOW 90° HYD	3	346190–421189
18	255471	LINE – HYDRAULIC	1	346190–421189
19	279001	SUPPORT – HOSE CLAMP	1	346190–421189
20	252399	CLAMP – ASSY	1	346190–421189
21	255461	PLATE – COVER	1	346190–421189
22	21881	FITTING – ADAPTER HYD	1	346190–421189
23	255462	HOSE – HYD	1	346190–421189
24	135235	CLAMP – DOUBLE HOSE INSULATED	1	346190–421189
25	135213	COUPLING – FEMALE HYD. 3/8 FLAT FACE BULKHEAD	2	346190–421189
26	135386	COUPLER – MALE HYD. 3/8 IN. FLAT FACE (FASTER) [307]	2	346190–421189
	111978	SEAL KIT – 3/8 MALE (FASTER ONLY)		346190–421189
27	245915	SUPPORT – HOSE COUPLER	1	346190–421189
28	294985	HOSE – HYD	1	346190–421189
29	294508	HOSE – HYD	1	346190–421189
30	252296	FITTING – ADAPTER-10 JIC X-6 BSPP	2	346190–421189
31	245955	SUPPORT – RH COUPLER	1	346190–421189

304. Kit includes two knives. Kits available through Whole Goods only.
305. If replacing the RH support assembly, order the Vertical Knife Mounts kit (MD #335869). The vertical knife mounts have a new design, and the kit includes both LH and RH mounts, hoses, and hardware required to convert to the new configuration.
306. Includes both LH and RH mounts, hoses, and hardware required to convert to the new configuration.
307. Faster coupler (MD #135386) is interchangeable with Parker Hannifin coupler (NSS). Seal kit (MD #111978) is only intended for Faster coupler and cannot be used with Parker Hannifin coupler. Length can be used to differentiate the two couplers; Faster coupler = 101 mm and Parker Hannifin coupler = 84 mm.

(OPTION) VERTICAL KNIFE – STANDARD REEL ARM, RIGHT END (2019–2021)

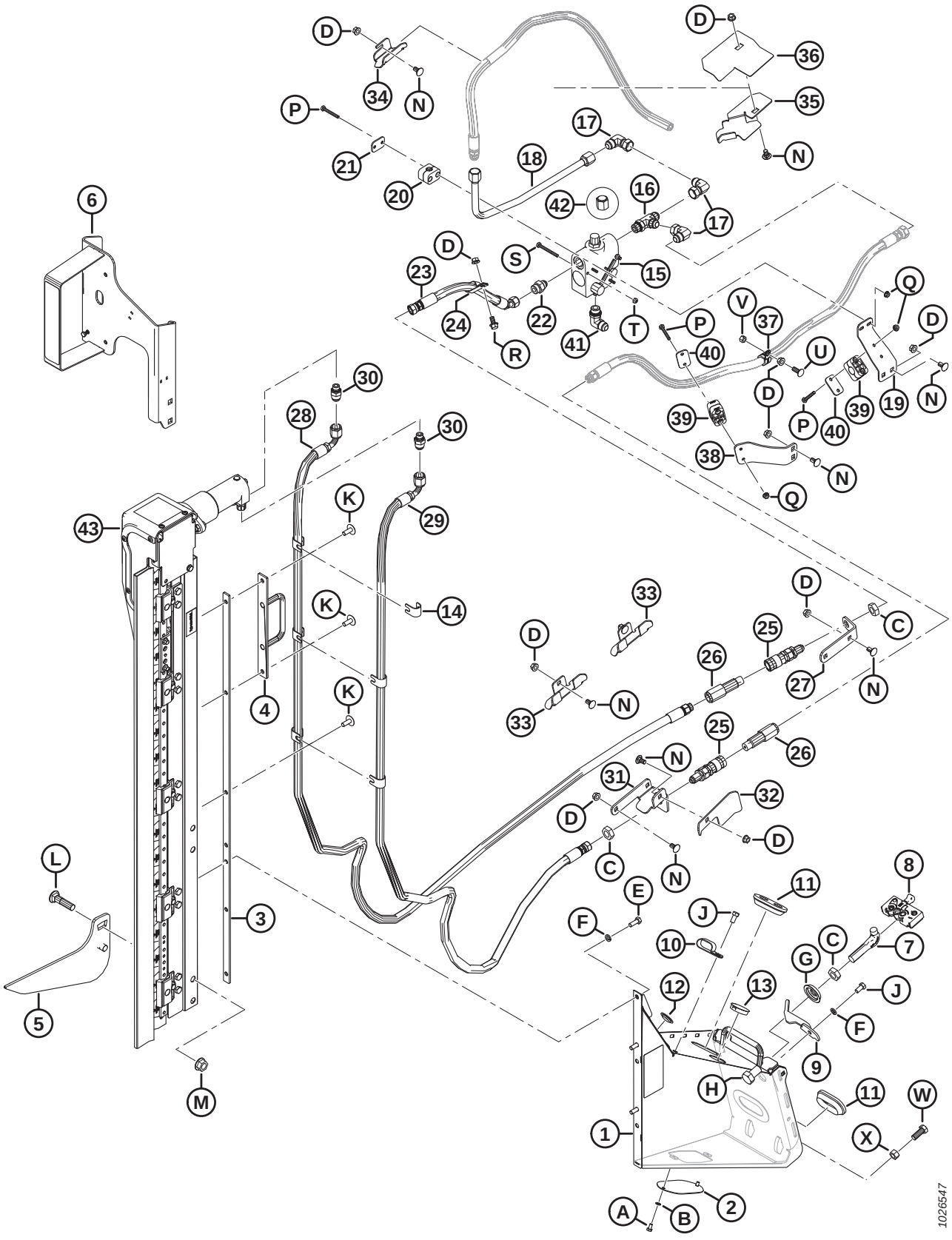

Ref	Part Number	Description	Qty	Serial Number
32	279017	DEFLECTOR – RH HOSE	1	346190–421189
33	245931	SUPPORT – HOSE	2	346190–421189
34	245956	SUPPORT – HOSE	1	346190–421189
35	253703	SUPPORT – HOSE, RH	1	346190–421189
36	253705	GUIDE – HOSE, RH	1	346190–421189
37	135709	CLAMP – INSULATED 3/4 IN	1	346190–421189
38	245946	SUPPORT – HOSE CLAMP	1	346190–421189
39	252368	CLAMP – ASSY	2	346190–421189
40	255460	PLATE – COVER	2	346190–421189
41	21843	FITTING – ELBOW 90° HYD	1	346190–421189
42	112935	CAP – 5/8 IN. TUBE 37° FLARE	1	346190–421189
43	NSS	ZIEGLER VERTICAL KNIFE [308]		346190–421189
	294995	HOSE – HYD, 12.5 IN. I.D., 520 MM LG, 100R17 METAL REIN. (NOT ILLUSTRATED) [309]	1	346190–421189
	50102	FITTING – HYD TEE (NOT ILLUSTRATED) [309]	1	346190–421189
A	21580	BOLT – HEX HD 1/4 NC X 0.5 LG GR 5 ZP		
B	18635	WASHER – REG. LOCK 1/4 IN. NOM. ID ZP		
C	7674	NUT – HEX JAM 3/4-16 UNF GR 5 ZP		
D	30228	NUT – FLANGE DT SMOOTH FACE 0.375-16 UNC		
E	20077	BOLT – HEX HD 3/8 NC X 1.0 LG GR 5 ZP		
F	18637	WASHER – REG. LOCK 3/8 IN. NOM. ID ZP		
G	253477	WASHER – VERTICAL KNIFE		
H	21590	BOLT – HH 3/4 NC X 1.25 LG GR 5 ZP		
J	21567	BOLT – HEX HD .375-16 UNC X 0.75 LG		
K	135507	SCREW – MACHINE TRUSS HD TORX, 38 NC X 1 LG		
L	30759	BOLT – RHSSN 5/8 NC X 2.5 LG GR 5 ZP		
M	50225	NUT – FLANGE DT SMOOTH FACE .625-11 UNC		
N	21472	BOLT – RHSN 3/8-16 X .75-GR5		
P	21570	BOLT – HH 1/4 NC X 2.0 LG GR 5 ZP		
Q	135248	NUT – FLG SMTH FACE 1/4-20 NC GR 5 ZP CTR LK DT THD		
R	21821	BOLT – HH FLG (SERR FACE) 3/8 NC X 0.75 GR 5 ZP		
S	21854	BOLT – HH 1/4 NC X 2.5 LG GR 5 ZP		
T	18724	NUT – HEX LOCK DT 1/4-20 UNC ZP		
U	100456	BOLT – RHSSN 3/8 NC X 1.0 GR 5 ZP		
V	135511	NUT – CENTER LOCK .375-16 UNC GR 5 ZP		
W	21491	BOLT – HH 1/2 NC X 1.25 LG GR 5 ZP		
X	18591	NUT – HEX 1/2-13 UNC GR 5 ZP		

308. Not sold separately, can be ordered as a set of two knives (MD #B6410). For service parts, refer to Section *90 (Option) Vertical Knife Assembly – Service Parts, page 281*.
309. For D1XL only. Part is required to make vertical knife bundles (MD #B6608 and B6609) compatible with D1XL Headers.

85 (Option) Vertical Knife – Standard Reel Arm, Left End (2022)

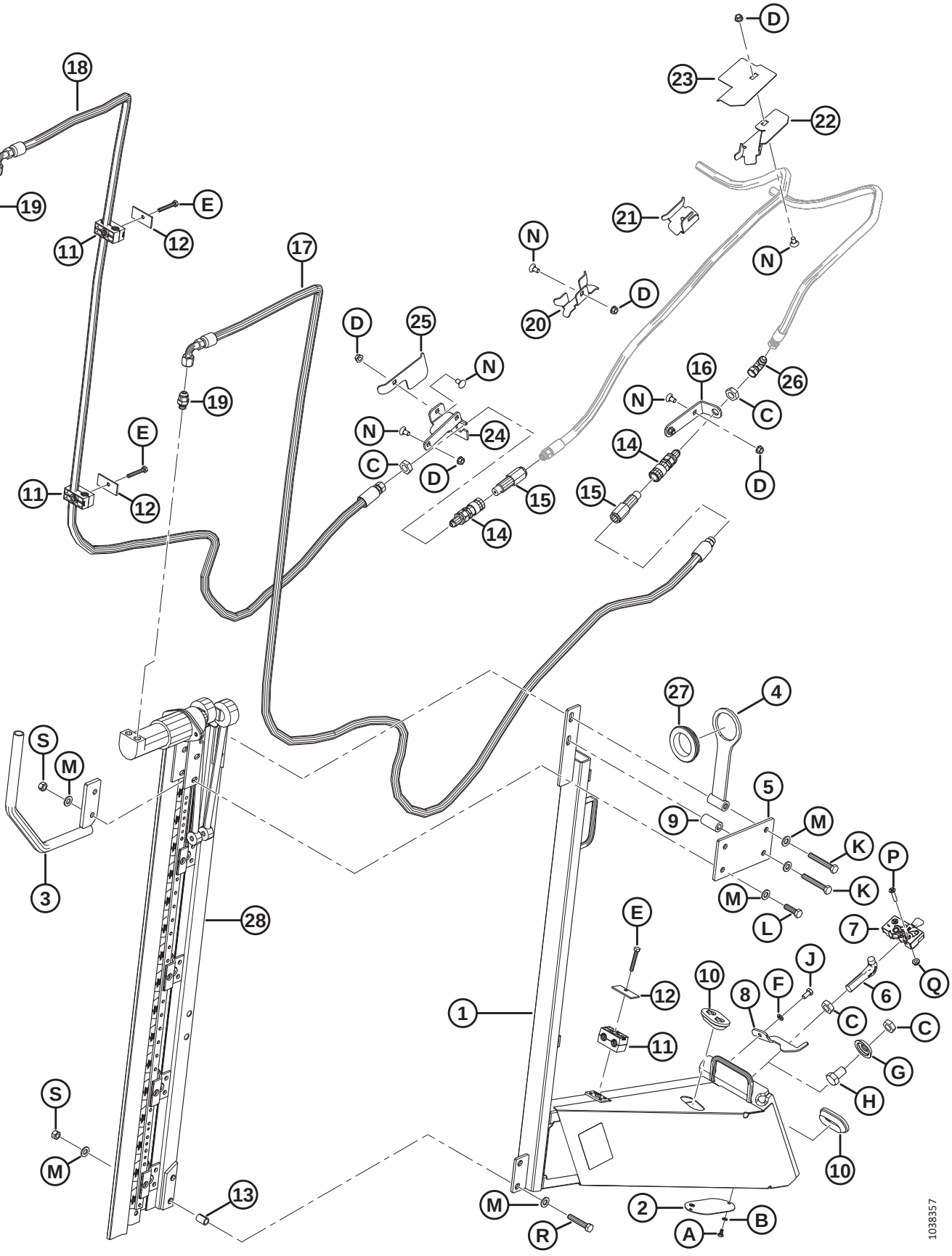

Ref	Part Number	Description	Qty	Serial Number
	B9048	KIT – VERTICAL KNIFE LH, LONG MOUNT [310]		421190–
	B6410	KIT – ZIEGLER LH/RH VERTICAL KNIFES FOR D1/FD1 [311]		421190–
1	335864	SUPPORT ASSEMBLY – LH LONG [312]	1	421190–
2	253582	PLATE	1	421190–
3	335785	DIVIDER – TUBE WELDMENT	1	421190–
4	335784	SUPPORT – HOSE BRACKET	1	421190–
5	335779	SUPPORT – MOTOR BRACKET	1	421190–
6	132773	HOOK – DIVIDER LATCH	1	421190–
7	120932	LATCH – LH	1	421190–
8	132248	LATCH – LH, DIVIDER SAFETY	1	421190–
9	335810	TUBE – SPACER	1	421190–
10	165103	GROMMET	2	421190–
11	202991	CLAMP – TUBING	3	421190–
12	232233	CLAMP – COVER PLATE	3	421190–
13	335867	SPACER – SPLIT	2	421190–
14	135213	COUPLING – FEMALE HYD. 3/8 FLAT FACE BULKHEAD	2	421190–
15	135386	COUPLER – MALE HYD. 3/8 IN. FLAT FACE (FASTER) [313]	2	421190–
	111978	SEAL KIT – 3/8 MALE (FASTER ONLY)		421190–
16	245915	SUPPORT – HOSE COUPLER	1	421190–
17	335760	HOSE – HYDRAULIC, 0.5 IN ID, 3740 MM LG, 100 R17	1	421190–
18	335759	HOSE – HYDRAULIC, 0.5 IN ID, 3020 MM LG, 100 R17	1	421190–
19	252296	FITTING – ADAPTER-10 JIC X-6 BSPP	2	421190–
20	245931	SUPPORT – HOSE	1	421190–
21	245956	SUPPORT – HOSE	1	421190–
22	253702	SUPPORT – HOSE, LH	1	421190–
23	253704	GUIDE – HOSE, LH	1	421190–
24	245928	SUPPORT – LH COUPLER	1	421190–
25	245936	DEFLECTOR – LH HOSE	1	421190–
26	30314	FITTING – ELBOW 90° HYD	1	421190–
27	172877	GROMMET – 2.38" I.D.	1	421190–
28	NSS	ZIEGLER VERTICAL KNIFE [314]		421190–
A	21580	BOLT – HEX HD 1/4 NC X 0.5 LG GR 5 ZP		
B	18635	WASHER – REG. LOCK 1/4 IN. NOM. ID ZP		
C	7674	NUT – HEX JAM 3/4-16 UNF GR 5 ZP		

310. Kits available through Whole Goods only.
311. Kit includes two knives. Kits available through Whole Goods only.
312. Includes LH support (NSS), plate (MD #253582), two bolts (MD #21580), two washers (MD #18635), and decal (MD #174684).
313. Faster coupler (MD #135386) is interchangeable with Parker Hannifin coupler (NSS). Seal kit (MD #111978) is only intended for Faster coupler and cannot be used with Parker Hannifin coupler. Length can be used to differentiate the two couplers; Faster coupler = 101 mm and Parker Hannifin coupler = 84 mm.
314. Not sold separately, can be ordered as a set of two knives (MD #B6410). For service parts, refer to Section *90 (Option) Vertical Knife Assembly – Service Parts, page 281*.

(OPTION) VERTICAL KNIFE – STANDARD REEL ARM, LEFT END (2022)

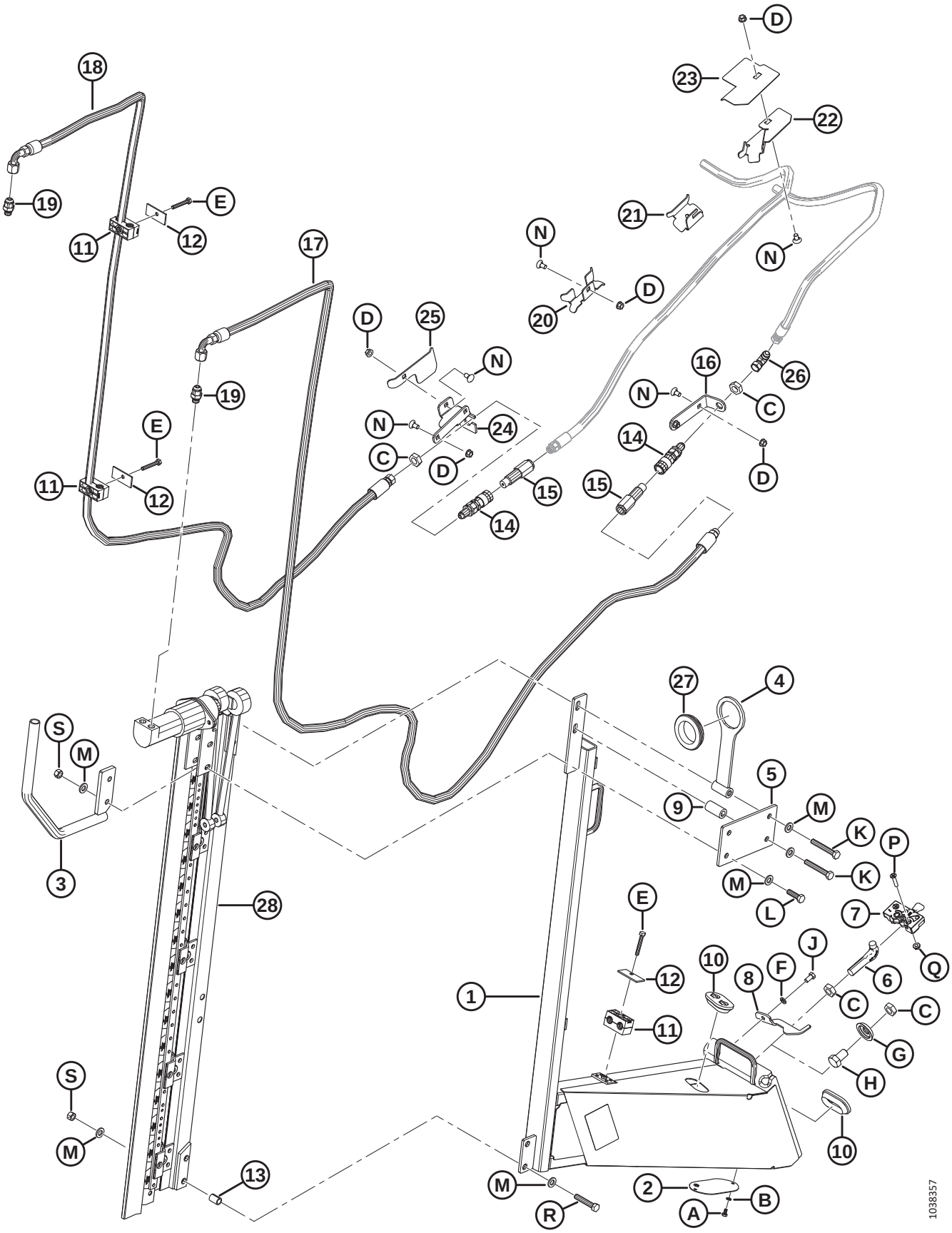

(OPTION) VERTICAL KNIFE – STANDARD REEL ARM, LEFT END (2022)

Ref	Part Number	Description	Qty	Serial Number
D	30228	NUT – FLANGE DT SMOOTH FACE 0.375-16 UNC		
E	184655	BOLT – HEX HD M8 X 1.25 X 55-8.8-AA1J		
F	18637	WASHER – REG. LOCK 3/8 IN. NOM. ID ZP		
G	253477	WASHER – VERTICAL KNIFE		
H	21590	BOLT – HH 3/4 NC X 1.25 LG GR 5 ZP		
J	21567	BOLT – HEX HD .375-16 UNC X 0.75 LG		
K	184674	BOLT – HEX HD TFL M12 X 1.75 X 80-8.8-AA1J		
L	184669	BOLT – HEX HD M1 2X 1.75 X 40-8.8-AA1J		
M	30636	WASHER – FLAT NARROW M12-STL-SOFT-AA1J		
N	21472	BOLT – RHSN 3/8-16 X .75-GR5		
P	30504	SCREW – FLAT CSK MACH 5/16 NC X 1 1/2 LG GR 5 ZP		
Q	30280	NUT – FLG SIDE LK SMTH FACE 5/16 NC GR 5 ZP		
R	252541	BOLT – HEX HD TFL M12 X 1.75 X 65-8.8-AA3L		
S	136759	NUT – HEX CTR LOC M12 X 1.75-8-AA1J		

86 (Option) Vertical Knife – Standard Reel Arm, Right End (2022)

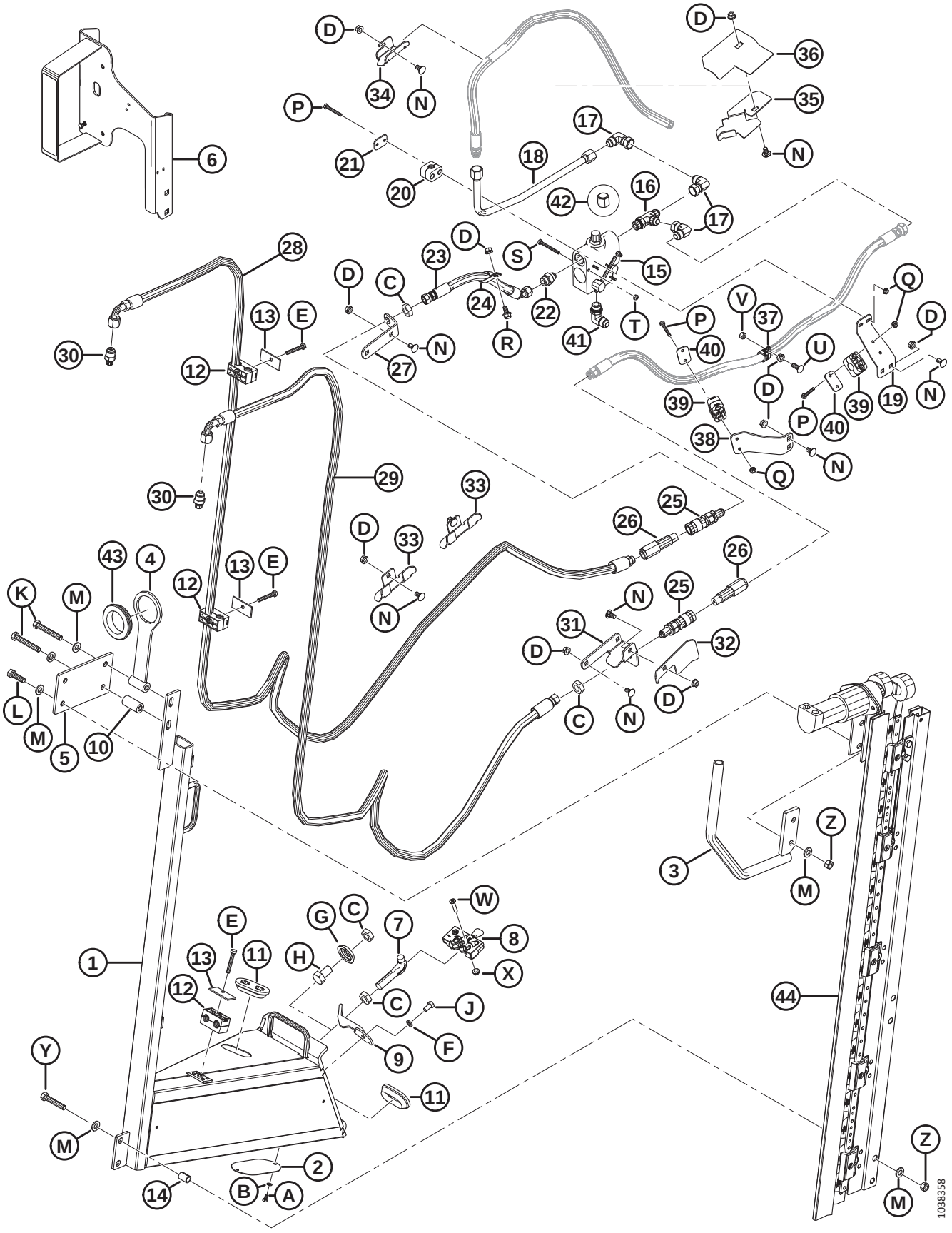

Ref	Part Number	Description	Qty	Serial Number
	B9051	KIT – VERTICAL KNIFE RH, LONG MOUNT [315]		421190–
	B6410	KIT – ZIEGLER LH/RH VERTICAL KNIFES FOR D1/FD1 [316]		421190–
1	335866	SUPPORT ASSEMBLY – RH LONG [317]	1	421190–
2	253582	PLATE	1	421190–
3	335785	DIVIDER – TUBE WELDMENT	1	421190–
4	335784	SUPPORT – HOSE BRACKET	1	421190–
5	335779	SUPPORT – MOTOR BRACKET	1	421190–
6	294393	SUPPORT – RH LIGHT VERT KNIFE	1	421190–
	115146	REFLECTOR – AMBER		421190–
	115147	REFLECTOR – RED		421190–
7	132773	HOOK – DIVIDER LATCH	1	421190–
8	120932	LATCH – LH	1	421190–
9	132248	LATCH – LH, DIVIDER SAFETY	1	421190–
10	335810	TUBE – SPACER	1	421190–
11	165103	GROMMET	2	421190–
12	202991	CLAMP – TUBING	3	421190–
13	232233	CLAMP – COVER PLATE	3	421190–
14	335867	SPACER – SPLIT	2	421190–
15	174422	VALVE	1	421190–
	30054	SEAL KIT		421190–
16	50019	FITTING – TEE HYD STR THD RUN TEE CW O-RING	1	421190–
17	30556	FITTING – ELBOW 90° HYD	3	421190–
18	255471	LINE – HYDRAULIC	1	421190–
19	279001	SUPPORT – HOSE CLAMP	1	421190–
20	252399	CLAMP – ASSY	1	421190–
21	255461	PLATE – COVER	1	421190–
22	21881	FITTING – ADAPTER HYD	1	421190–
23	255462	HOSE – HYD	1	421190–
24	135235	CLAMP – DOUBLE HOSE INSULATED	1	421190–
25	135213	COUPLING – FEMALE HYD. 3/8 FLAT FACE BULKHEAD	2	421190–
26	135386	COUPLER – MALE HYD. 3/8 IN. FLAT FACE (FASTER) [318]	2	421190–
	111978	SEAL KIT – 3/8 MALE (FASTER ONLY)		421190–
27	245915	SUPPORT – HOSE COUPLER	1	421190–
28	335760	HOSE – HYDRAULIC, 0.5 IN ID, 3740 MM LG, 100 R17	1	421190–
29	335759	HOSE – HYDRAULIC, 0.5 IN ID, 3020 MM LG, 100 R17	1	421190–
30	252296	FITTING – ADAPTER-10 JIC X-6 BSPP	2	421190–
31	245955	SUPPORT – RH COUPLER	1	421190–

315. Kits available through Whole Goods only.
316. Kit includes two knives. Kits available through Whole Goods only.
317. Includes RH support (NSS), plate (MD #253582), two bolts (MD #21580), two washers (MD #18635), and decal (MD #174684).
318. Faster coupler (MD #135386) is interchangeable with Parker Hannifin coupler (NSS). Seal kit (MD #111978) is only intended for Faster coupler and cannot be used with Parker Hannifin coupler. Length can be used to differentiate the two couplers; Faster coupler = 101 mm and Parker Hannifin coupler = 84 mm.

(OPTION) VERTICAL KNIFE – STANDARD REEL ARM, RIGHT END (2022)

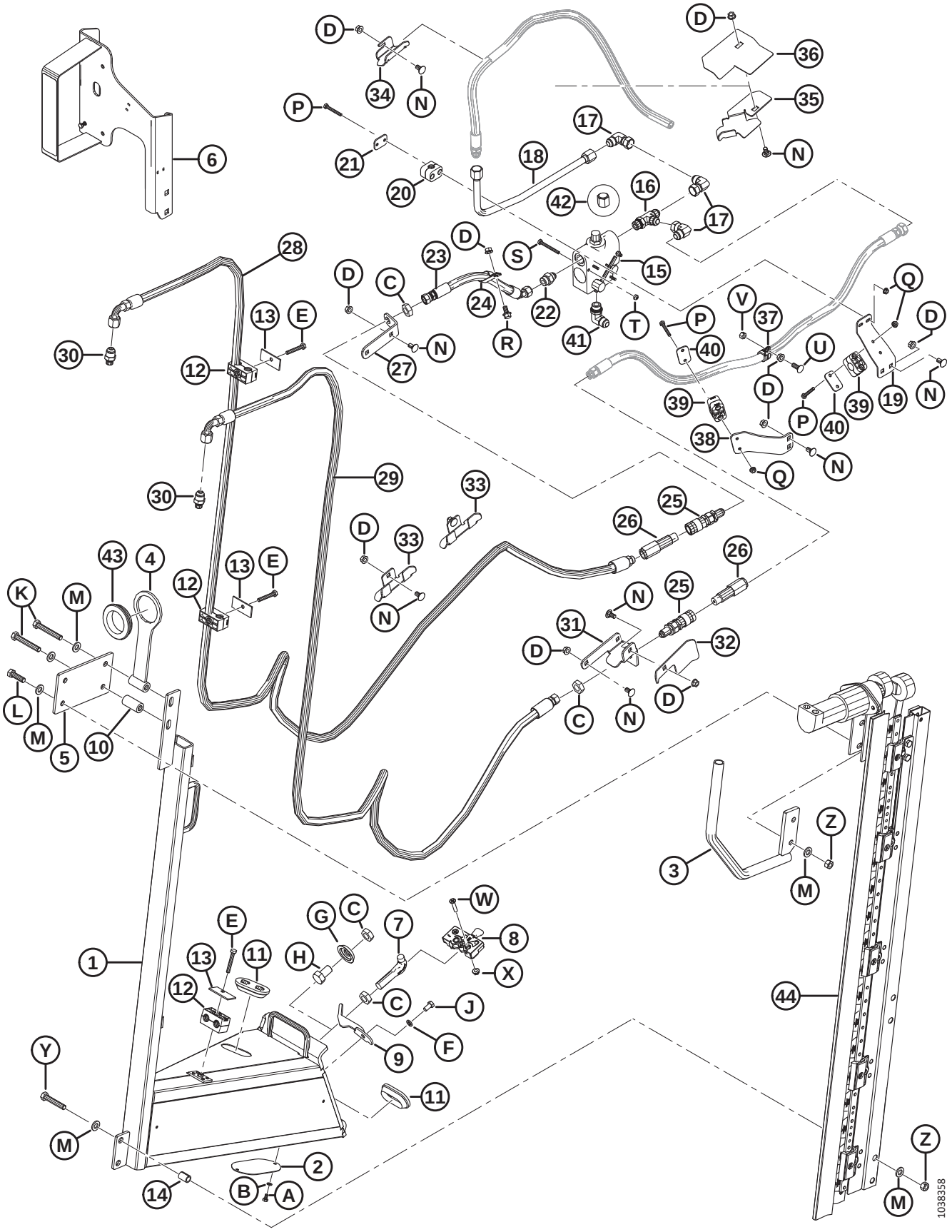

Ref	Part Number	Description	Qty	Serial Number
32	279017	DEFLECTOR – RH HOSE	1	421190–
33	245931	SUPPORT – HOSE	2	421190–
34	245956	SUPPORT – HOSE	1	421190–
35	253703	SUPPORT – HOSE, RH	1	421190–
36	253705	GUIDE – HOSE, RH	1	421190–
37	135709	CLAMP – INSULATED 3/4 IN	1	421190–
38	245946	SUPPORT – HOSE CLAMP	1	421190–
39	252368	CLAMP – ASSY	2	421190–
40	255460	PLATE – COVER	2	421190–
41	21843	FITTING – ELBOW 90° HYD	1	421190–
42	112935	CAP – 5/8 IN. TUBE 37° FLARE	1	421190–
43	172877	GROMMET – 2.38" I.D.	1	421190–
44	NSS	ZIEGLER VERTICAL KNIFE [319]		421190–
	294995	HOSE – HYD, 12.5 IN. I.D., 520 MM LG, 100R17 METAL REIN. (NOT ILLUSTRATED) [320]	1	421190–
	50102	FITTING – HYD TEE (NOT ILLUSTRATED) [320]	1	421190–
A	21580	BOLT – HEX HD 1/4 NC X 0.5 LG GR 5 ZP		
B	18635	WASHER – REG. LOCK 1/4 IN. NOM. ID ZP		
C	7674	NUT – HEX JAM 3/4-16 UNF GR 5 ZP		
D	30228	NUT – FLANGE DT SMOOTH FACE 0.375-16 UNC		
E	184655	BOLT – HEX HD M8 X 1.25 X 55-8.8-AA1J		
F	18637	WASHER – REG. LOCK 3/8 IN. NOM. ID ZP		
G	253477	WASHER – VERTICAL KNIFE		
H	21590	BOLT – HH 3/4 NC X 1.25 LG GR 5 ZP		
J	21567	BOLT – HEX HD .375-16 UNC X 0.75 LG		
K	184674	BOLT – HEX HD TFL M12 X 1.75 X 80-8.8-AA1J		
L	184669	BOLT – HEX HD M1 2X 1.75 X 40-8.8-AA1J		
M	30636	WASHER – FLAT NARROW M12-STL-SOFT-AA1J		
N	21472	BOLT – RHSN 3/8-16 X .75-GR5		
P	21570	BOLT – HH 1/4 NC X 2.0 LG GR 5 ZP		
Q	135248	NUT – FLG SMTH FACE 1/4-20 NC GR 5 ZP CTR LK DT THD		
R	21821	BOLT – HH FLG (SERR FACE) 3/8 NC X 0.75 GR 5 ZP		
S	21854	BOLT – HH 1/4 NC X 2.5 LG GR 5 ZP		
T	18724	NUT – HEX LOCK DT 1/4-20 UNC ZP		
U	100456	BOLT – RHSSN 3/8 NC X 1.0 GR 5 ZP		
V	135511	NUT – CENTER LOCK .375-16 UNC GR 5 ZP		
W	30504	SCREW – FLAT CSK MACH 5/16 NC X 1 1/2 LG GR 5 ZP		
X	30280	NUT – FLG SIDE LK SMTH FACE 5/16 NC GR 5 ZP		

319. Not sold separately, can be ordered as a set of two knives (MD #B6410). For service parts, refer to Section *90 (Option) Vertical Knife Assembly – Service Parts, page 281*.
320. For D1XL only. Part is required to make vertical knife bundles (MD #B6608 and B6609) compatible with D1XL Headers.

(OPTION) VERTICAL KNIFE – STANDARD REEL ARM, RIGHT END (2022)

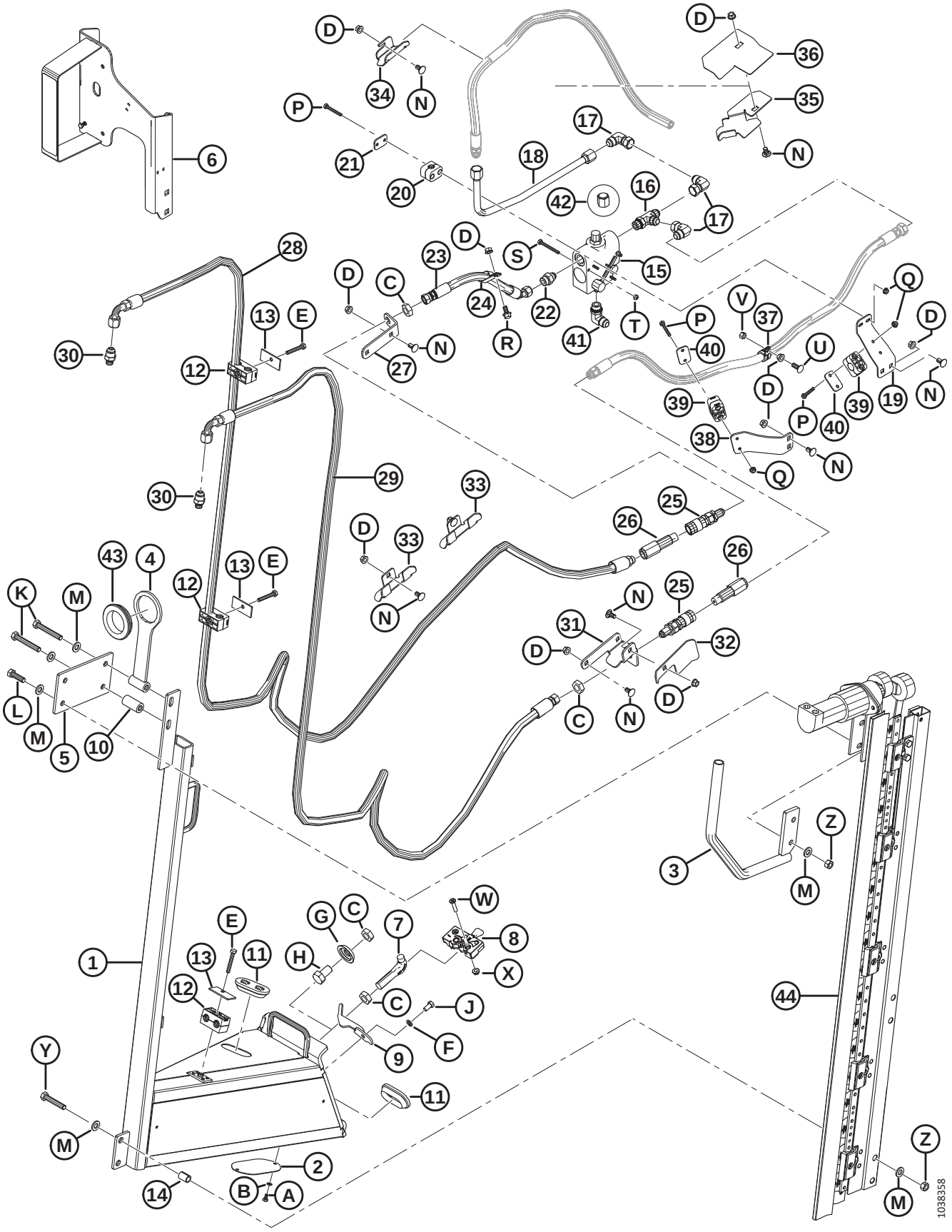

Ref	Part Number	Description	Qty	Serial Number
Y	**252541**	**BOLT – HEX HD TFL M12 X 1.75 X 65-8.8-AA3L**		
Z	**136759**	**NUT – HEX CTR LOC M12 X 1.75-8-AA1J**		

87 (Option) Vertical Knife – Short Reel Arms

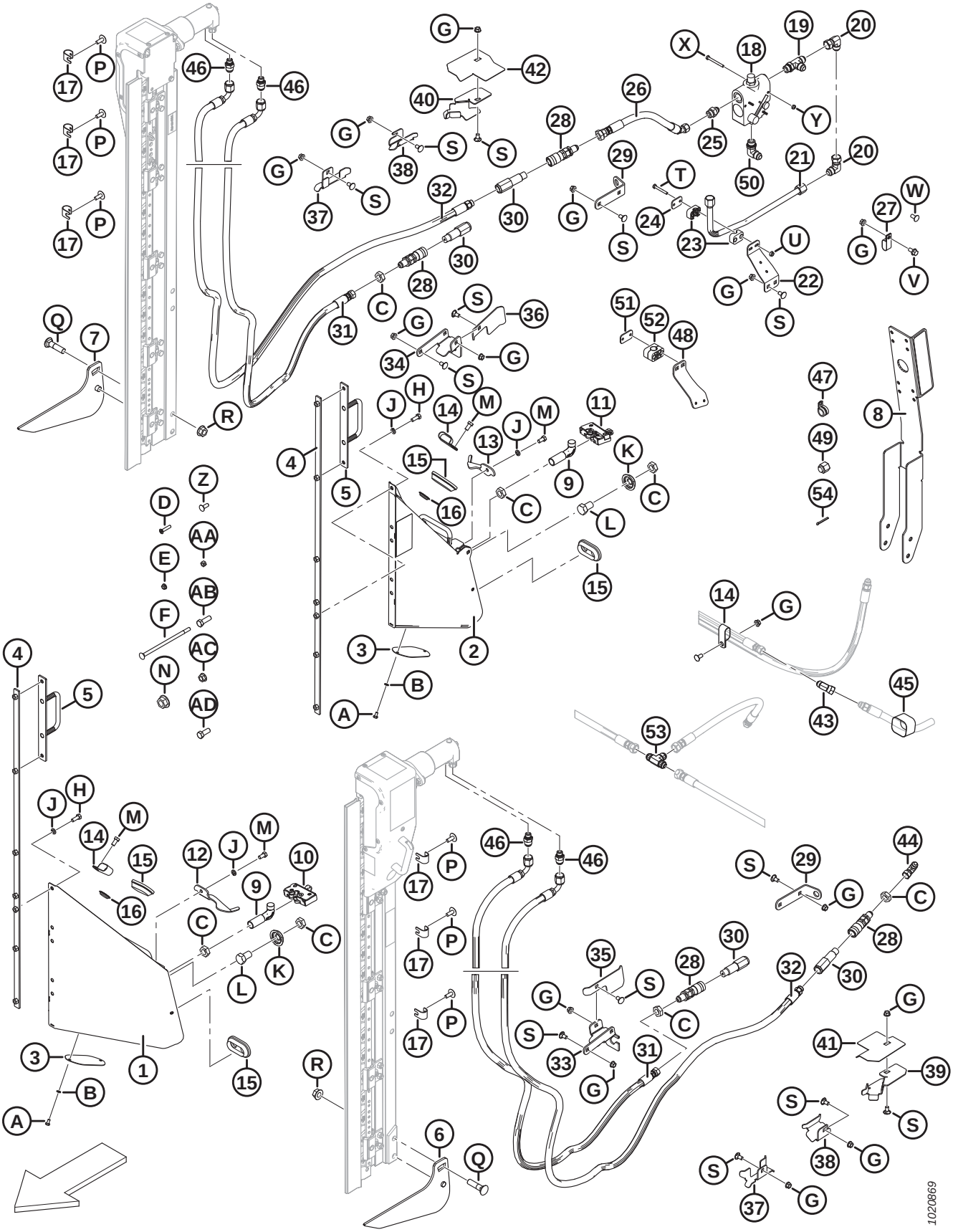

(OPTION) VERTICAL KNIFE – SHORT REEL ARMS

NOTE:

Vertical Knife Mounts (MD #B6137 and B6138) are **NOT** compatible with Reel Arm Extension Kit (MD #B6591).

Ref	Part Number	Description	Qty B6137/B6138	Serial Number
	B6137	KIT – VERTICAL KNIFE, LEFT (EXPORT ONLY) [321]	1/0	
	B6138	KIT – VERTICAL KNIFE, RIGHT (EXPORT ONLY) [321]	0/1	
1	253681	SUPPORT ASSEMBLY (LH) [322]	1/0	
2	253680	SUPPORT ASSEMBLY (RH) [322]	0/1	
3	253582	PLATE	1/0	
4	253668	SUPPORT WELDMENT	1/1	
5	253570	SUPPORT WELDMENT	1/1	
6	253708	LIFTER LEFT WELDMENT	1/0	
7	253709	LIFTER RIGHT WELDMENT	0/1	
8	253696	SUPPORT ASSEMBLY [323]	0/1	
9	132773	HOOK – DIVIDER LATCH	1/1	
10	120932	LATCH (LH)	1/0	
11	120933	LATCH (RH)	0/1	
12	132248	LATCH – LH, DIVIDER SAFETY	1/0	
13	132253	LATCH – RH, DIVIDER SAFETY	0/1	
14	103738	CLAMP – PVC INSULATED 13/16 IN. TUBE SIZE	1/7	
15	165103	GROMMET	2/2	
16	253678	PLUG	3/3	
17	279798	SUPPORT	6/6	
18	174422	VALVE [324]	0/1	
	30054	SEAL KIT		
19	50019	FITTING – TEE HYD STR THD RUN TEE CW O-RING	0/1	
20	30556	FITTING – ELBOW 90° HYD	0/3	
21	255471	LINE – HYDRAULIC	0/1	
22	279001	SUPPORT – HOSE CLAMP	0/1	
23	252399	CLAMP – ASSY	0/1	
24	255461	PLATE – COVER	0/1	
25	21881	FITTING – ADAPTER HYD	0/1	
26	255462	HOSE – HYD	0/1	
27	135235	CLAMP – DOUBLE HOSE INSULATED	0/1	
28	135213	COUPLING – FEMALE HYD. 3/8 FLAT FACE BULKHEAD	2/2	
29	245915	SUPPORT – HOSE COUPLER	1/1	

321. Additional hose kit is required to install left and right vertical knife. For vertical knife hose kits, refer to Section *88 (Option) Vertical Knife Hose Kits – Standard and Short Reel Arms, Single Reel, page 277* and *89 (Option) Vertical Knife Hose Kits – Standard and Short Reel Arms, Double Reel, page 279*. Kits available through Whole Goods only.
322. Includes plate (MD #253582), bolt (MD #21580), washer (MD #18635), and decal (MD #174684).
323. Includes reflector (MD #115147).
324. Includes seal kit (MD #30054).

(OPTION) VERTICAL KNIFE – SHORT REEL ARMS

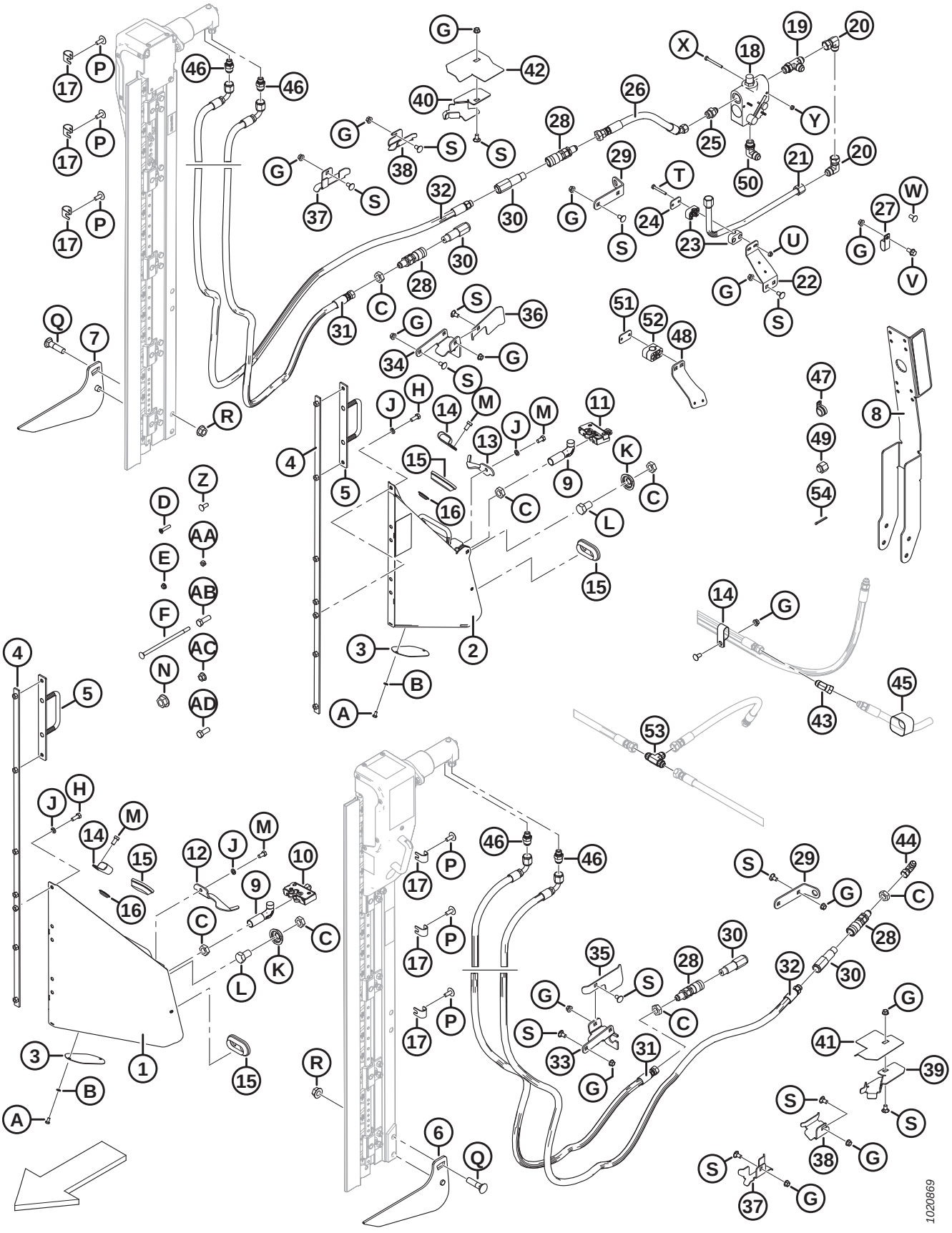

Ref	Part Number	Description	Qty B6137/B6138	Serial Number
30	135386	COUPLER – MALE HYD. 3/8 IN. FLAT FACE (FASTER) [325]	2/2	
	111978	SEAL KIT – 3/8 MALE (FASTER ONLY)		
31	255509	HOSE – HYD	1/1	
32	255510	HOSE – HYD	1/1	
33	245928	SUPPORT – LH COUPLER	1/0	
34	245955	SUPPORT – RH COUPLER	0/1	
35	245936	DEFLECTOR – LH HOSE	1/0	
36	279017	DEFLECTOR – RH HOSE	0/1	
37	245931	SUPPORT – HOSE	1/2	
38	245956	SUPPORT – HOSE	1/1	
39	253702	SUPPORT – HOSE, LH	1/0	
40	253703	SUPPORT – HOSE, RH	0/1	
41	253704	GUIDE – HOSE, LH	1/0	
42	253705	GUIDE – HOSE, RH	0/1	
43	135685	FITTING – ELBOW 45° HYD	0/1	
44	30314	FITTING – ELBOW 90° HYD	1/0	
45	135443	FASTENER – CINCH STRAP 4 IN. LG	0/3	
46	252296	FITTING – ADAPTER-10 JIC X-6 BSPP	2/2	
47	135709	CLAMP – INSULATED 3/4 IN.	0/1	
48	245946	SUPPORT – HOSE CLAMP	0/1	
49	112935	CAP – 5/8 IN. TUBE 37 DEG FLARE	0/1	
50	21843	FITTING – ELBOW 90° HYD	0/1	
51	255460	PLATE – COVER	0/2	
52	252368	CLAMP – ASSY	0/2	
53	30551	FITTING – TEE HYD	0/1	
54	18607	PIN – COTTER 5/32 DIA X 1.5 ZP	0/1	
A	21580	BOLT – HEX HD 1/4 NC X 0.5 LG GR 5 ZP		
B	18635	WASHER – REG. LOCK 1/4 IN. NOM. I.D. ZP		
C	7674	NUT – HEX JAM 3/4-16 UNF GR 5 ZP		
D	30504	SCREW – FLAT CSK MACH 5/16 NC X 1-1/2 LG GR 5 ZP		
E	30280	NUT – FLG SIDE LK SMTH FACE 5/16 NC GR 5 ZP		
F	135665	BOLT – RHSN 3/8-16 X 8-GR5-ZP		
G	30228	NUT – FLG DT SMTH FACE 0.375-16 UNC		
H	20077	BOLT – HEX HD 3/8 NC X 1.0 LG GR 5 ZP		
J	18637	WASHER – REG. LOCK 3/8 IN. NOM. I.D. ZP		
K	253477	WASHER – VERTICAL KNIFE		
L	21590	BOLT – HH 3/4 NC X 1.25 LG GR 5 ZP		

325. Faster coupler (MD #135386) is interchangeable with Parker Hannifin coupler (NSS). Seal kit (MD #111978) is only intended for Faster coupler and cannot be used with Parker Hannifin coupler. Length can be used to differentiate the two couplers; Faster coupler = 101 mm and Parker Hannifin coupler = 84 mm.

(OPTION) VERTICAL KNIFE – SHORT REEL ARMS

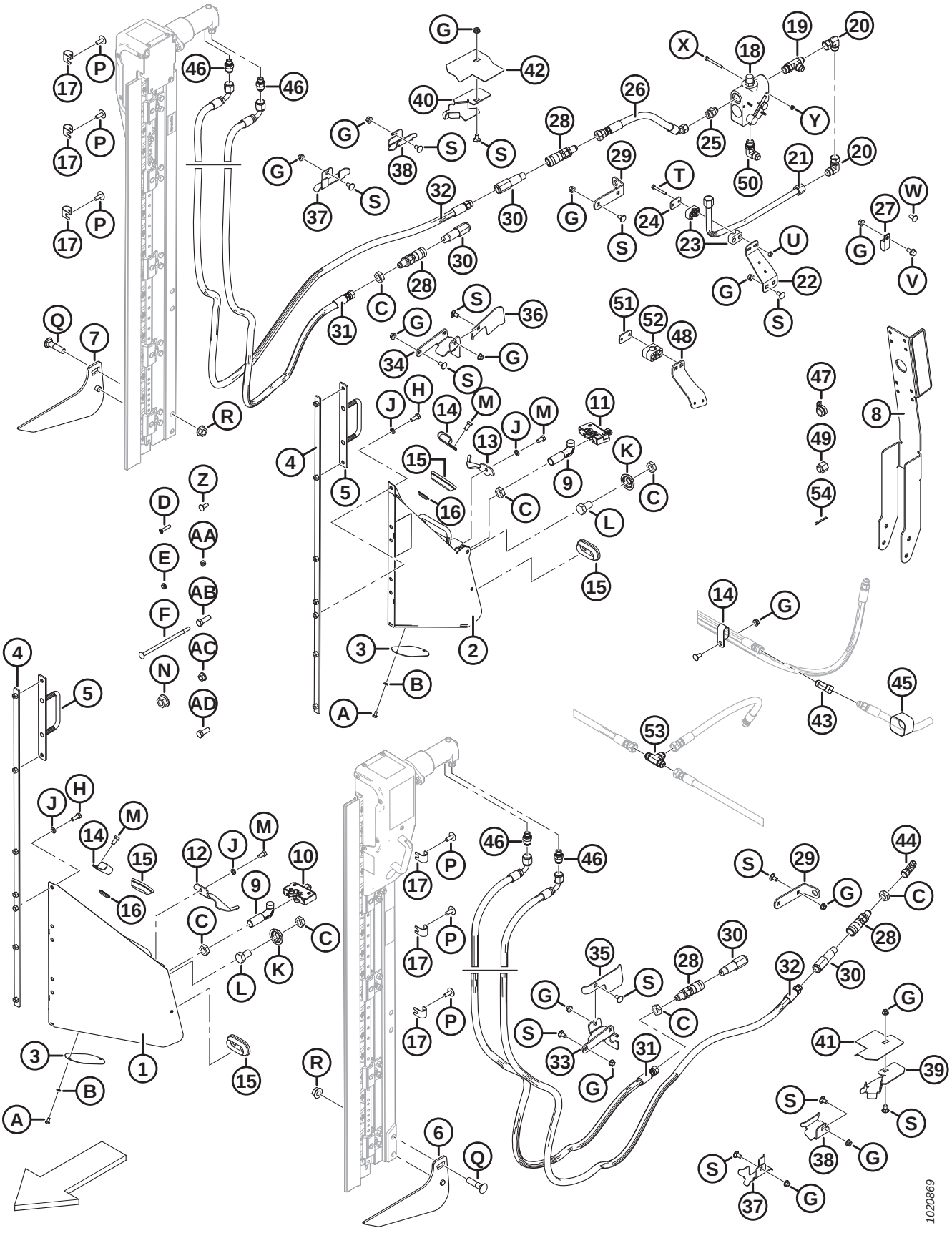

(OPTION) VERTICAL KNIFE – SHORT REEL ARMS

Ref	Part Number	Description	Qty B6137/B6138	Serial Number
M	21567	BOLT – HEX HD .375-16 UNC X 0.75 LG		
N	135367	NUT – FLANGE DT SMTH FACE 0.75-10 UNC GR. G		
P	135507	SCREW – MACHINE,TRUSS HD TORX, 38 NC X 1 LG		
Q	30759	BOLT – RHSSN 5/8 NC X 2.5 LG GR 5 ZP		
R	50225	NUT – FLANGE DT SMOOTH FACE .625-11 UNC		
S	21472	BOLT – RHSN 3/8-16 X .75-GR5		
T	21570	BOLT – HH 1/4 NC X 2.0 LG GR 5 ZP		
U	135248	NUT – FLG SMTH FACE 1/4-20 NC GR 5 ZP CTR LK DT		
V	21821	BOLT – HH FLG (SER FACE) 3/8 NC X 0.75 GR 5 ZP		
W	21863	BOLT – RHSSN 3/8 NC X 0.75 LG GR 5 ZP		
X	21854	BOLT – HH 1/4 NC X 2.5 LG GR 5 ZP		
Y	18724	NUT – HEX LOCK DT 1/4-20 UNC ZP		
Z	100456	BOLT – RHSSN 3/8 NC X 1.0 GR 5 ZP		
AA	135511	NUT – CENTER LOCK .375-16 UNC GR 5 ZP		
AB	18723	BOLT – HH 1/2 NC X 1.5 LG TFL GR 5 ZP		
AC	50186	NUT – FLG LK SM FACE DT 0.500-13 UNC GR 5		
AD	21491	BOLT – HH 1/2 NC X 1.25 LG GR 5 ZP		

88 (Option) Vertical Knife Hose Kits – Standard and Short Reel Arms, Single Reel

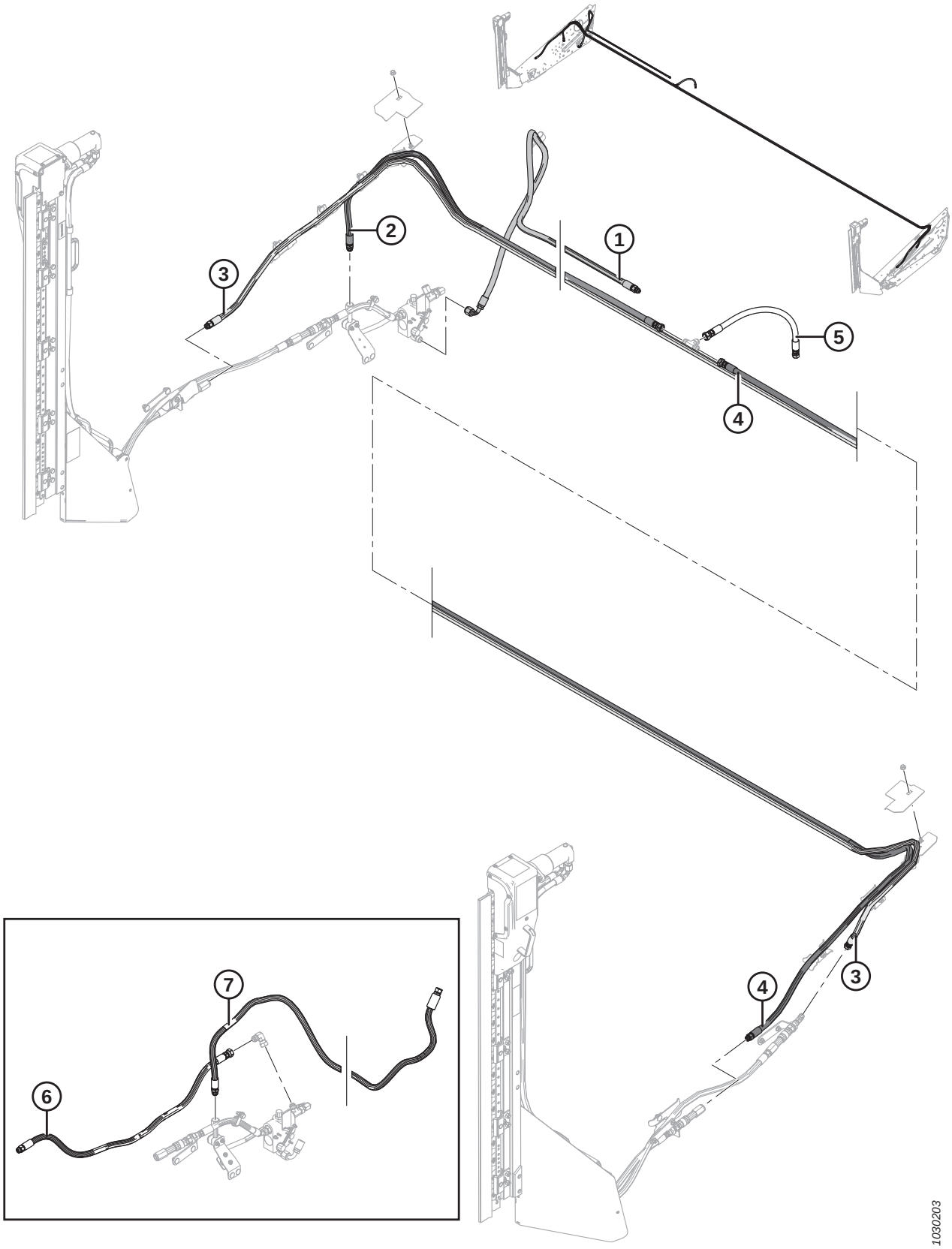

(OPTION) VERTICAL KNIFE HOSE KITS – STANDARD AND SHORT REEL ARMS, SINGLE REEL

NOTE:

Hose kits to be used in conjunction with vertical knife kits MD #B6137 and MD #B6138 (short reel arms), or MD #B6608 and MD #B6609 (standard reel arms).

Ref	Part Number	Description	Qty	Serial Number
	B6264	KIT – DBL VERTICAL KNIFE HOSE (20 FT RIGID, SR) [326]	1	
	B6265	KIT – DBL VERTICAL KNIFE HOSE (25 FT RIGID, SR) [326]	1	
	B6266	KIT – DBL VERTICAL KNIFE HOSE (30 FT RIGID, SR) [326]	1	
	B6267	KIT – DBL VERTICAL KNIFE HOSE (35 FT RIGID, SR) [326]	1	
1	255947	HOSE – HYDRAULIC (EXCEPT 20 FT)	1	
2	255573	HOSE – HYDRAULIC (20 FT RIGID, SR)	1	
	255574	HOSE – HYDRAULIC (25 FT RIGID, SR)	1	
	255558	HOSE – HYDRAULIC (30 FT RIGID, SR)	1	
	255559	HOSE – HYDRAULIC (35 FT RIGID, SR)	1	
3	255576	HOSE – HYDRAULIC (20 FT RIGID, SR)	1	
	255577	HOSE – HYDRAULIC (25 FT RIGID, SR)	1	
	255544	HOSE – HYDRAULIC (30 FT RIGID, SR)	1	
	255545	HOSE – HYDRAULIC (35 FT RIGID, SR)	1	
4	255579	HOSE – HYDRAULIC (20 FT RIGID, SR)	1	
	255580	HOSE – HYDRAULIC (25 FT RIGID, SR)	1	
	255562	HOSE – HYDRAULIC (30 FT RIGID, SR)	1	
	255563	HOSE – HYDRAULIC (35 FT RIGID, SR)	1	
5	255497	HOSE – HYDRAULIC	1	
6	255465	HOSE – HYDRAULIC (SINGLE VERTICAL KNIFE ONLY) [327]	A/R	
7	255582	HOSE – HYDRAULIC (20 FT RIGID, SR, SINGLE VERTICAL KNIFE ONLY) [327]	A/R	
	255583	HOSE – HYDRAULIC (25–35 FT RIGID, SR, SINGLE VERTICAL KNIFE ONLY) [327]	A/R	

326. Kits available through Whole Goods only.

327. Not included in vertical knife hose kits. Hose is used when mounting the right vertical knife by itself.

89 (Option) Vertical Knife Hose Kits – Standard and Short Reel Arms, Double Reel

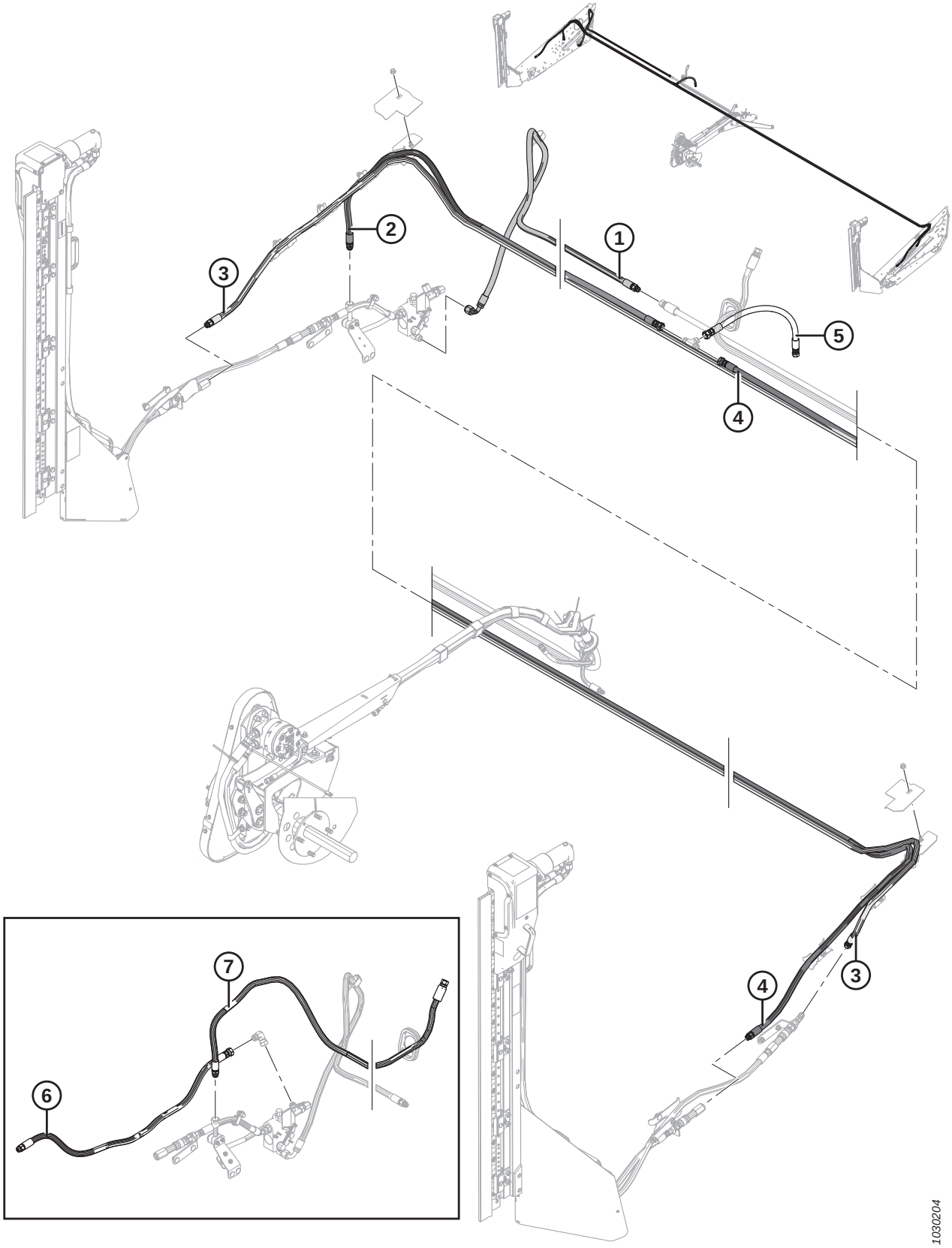

(OPTION) VERTICAL KNIFE HOSE KITS – STANDARD AND SHORT REEL ARMS, DOUBLE REEL

NOTE:

Hose kits to be used in conjunction with vertical knife kits MD #B6137 and MD #B6138 (short reel arms), or MD #B6608 and MD #B6609 (standard reel arms).

Ref	Part Number	Description	Qty	Serial Number
	B6255	KIT – DBL VERTICAL KNIFE HOSE (30 FT RIGID, DR) [328]	1	
	B6256	KIT – DBL VERTICAL KNIFE HOSE (35 FT RIGID, DR) [328]	1	
	B6257	KIT – DBL VERTICAL KNIFE HOSE (40 FT RIGID, DR) [328]	1	
	B6258	KIT – DBL VERTICAL KNIFE HOSE (45 FT RIGID, DR) [328]	1	
1	255554	HOSE – HYDRAULIC (30 FT RIGID, DR)	1	
	255555	HOSE – HYDRAULIC (35 FT RIGID, DR)	1	
	255556	HOSE – HYDRAULIC (40 FT RIGID, DR)	1	
	255557	HOSE – HYDRAULIC (45 FT RIGID, DR)	1	
2	255558	HOSE – HYDRAULIC (30 FT RIGID, DR)	1	
	255559	HOSE – HYDRAULIC (35 FT RIGID, DR)	1	
	255560	HOSE – HYDRAULIC (40 FT RIGID, DR)	1	
	255561	HOSE – HYDRAULIC (45 FT RIGID, DR)	1	
3	255544	HOSE – HYDRAULIC (30 FT RIGID, DR)	1	
	255545	HOSE – HYDRAULIC (35 FT RIGID, DR)	1	
	255546	HOSE – HYDRAULIC (40 FT RIGID, DR)	1	
	255547	HOSE – HYDRAULIC (45 FT RIGID, DR)	1	
4	255562	HOSE – HYDRAULIC (30 FT RIGID, DR)	1	
	255563	HOSE – HYDRAULIC (35 FT RIGID, DR)	1	
	255564	HOSE – HYDRAULIC (40 FT RIGID, DR)	1	
	255565	HOSE – HYDRAULIC (45 FT RIGID, DR)	1	
5	255497	HOSE – HYDRAULIC	1	
6	255465	HOSE – HYDRAULIC (SINGLE VERTICAL KNIFE ONLY) [329]	A/R	
7	255567	HOSE – HYDRAULIC (30 FT RIGID, DR, SINGLE VERTICAL KNIFE ONLY) [329]	A/R	
	255568	HOSE – HYDRAULIC (35 FT RIGID, DR, SINGLE VERTICAL KNIFE ONLY) [329]	A/R	
	255569	HOSE – HYDRAULIC (40 FT RIGID, DR, SINGLE VERTICAL KNIFE ONLY) [329]	A/R	
	255570	HOSE – HYDRAULIC (45 FT RIGID, DR, SINGLE VERTICAL KNIFE ONLY) [329]	A/R	

328. Kits available through Whole Goods only.
329. Not included in vertical knife hose kits. Hose is used when mounting the right vertical knife by itself.

90 (Option) Vertical Knife Assembly – Service Parts

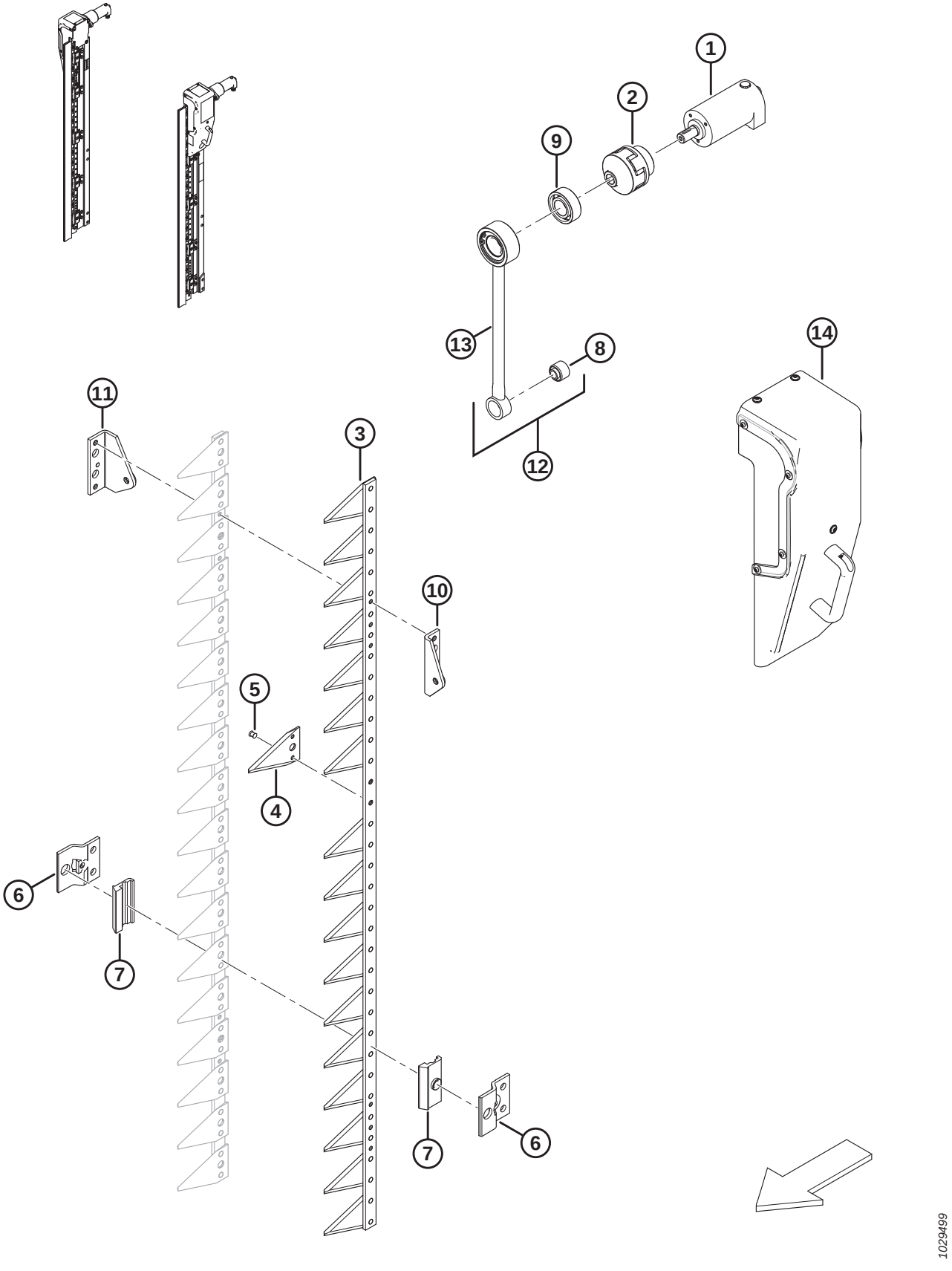

(OPTION) VERTICAL KNIFE ASSEMBLY – SERVICE PARTS

NOTE:

All parts listed are for service only. Vertical Knives can be ordered as a set of two knives (MD #B6410).

Ref	Part Number	Description	Qty	Serial Number
1	304611	HYDRAULIC MOTOR		
2	304612	COUPLING – ELASTIC SHAFT		
3	304614	ASSEMBLY – KNIFE [330]		
4	304615	SECTION – KNIFE		
5	304616	RIVET		
6	304617	HOLDER – KNIFE		
7	304618	PLATE – GUIDE		
8	304619	BUSHING – RUBBER METAL		
9	304620	BEARING – SELF-ALIGNING		
10	304621	HEAD – KNIFE FRONT		
11	304622	HEAD – KNIFE REAR		
12	304623	ASSEMBLY – CONNECTING ROD [331]		
13	304624	ROD – CONNECTING		
14	304625	GUARD – LEFT/RIGHT CRANK [332]		

330. Includes knife sections (MD #304615) and rivets (MD #304616).
331. Includes connecting rod (MD #304624) and bushing (MD #304619).
332. Includes a front plate, which is shipped in the left guard configuration. If the guard will be used on the right knife, the plate must be moved to the opposite side of the guard.

91 Float Module Frame and Components

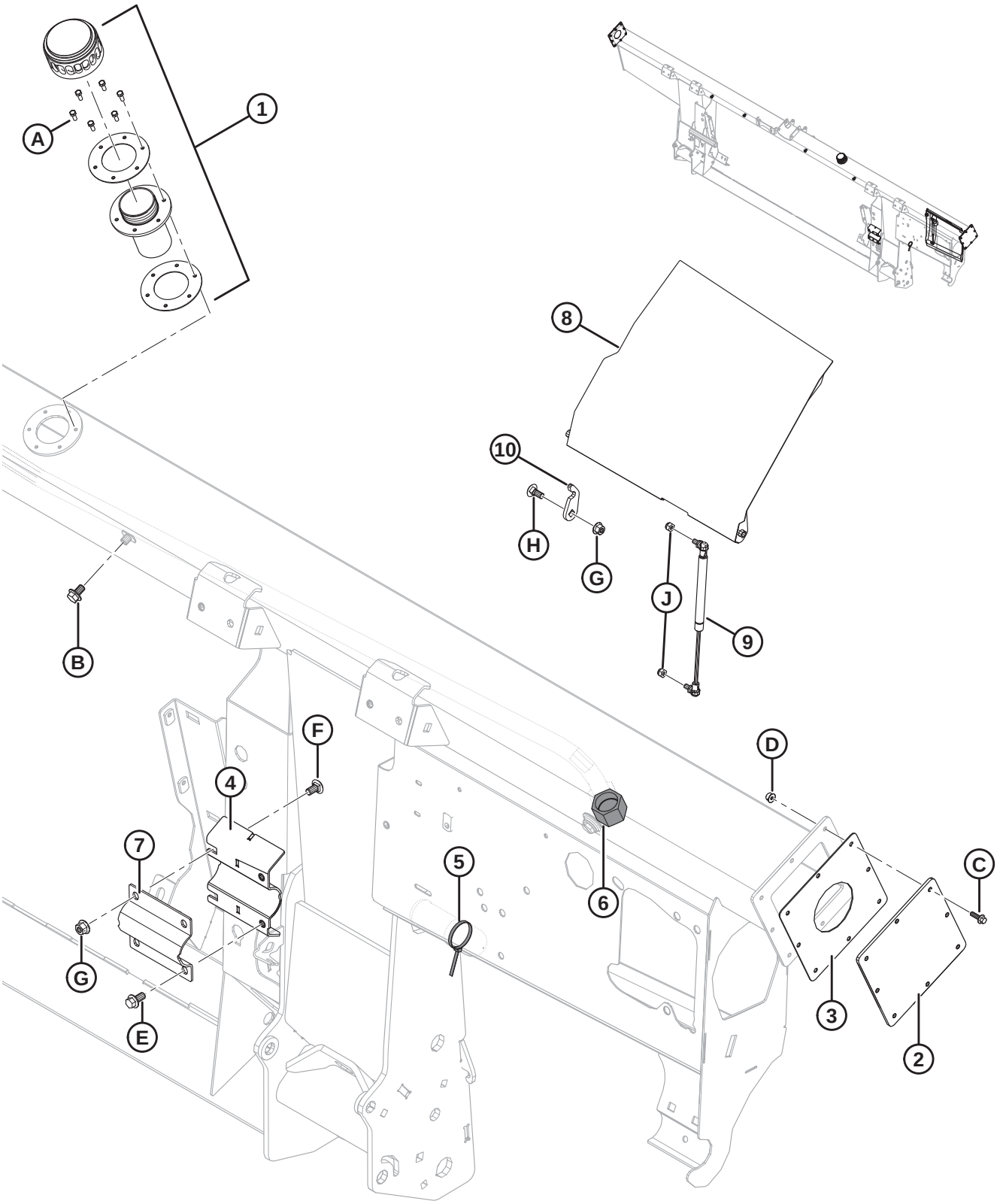

FLOAT MODULE FRAME AND COMPONENTS

Ref	Part Number	Description	Qty	Serial Number
1	133942	CAP – OIL FILLER [333]	1	
	312706	KIT – OIL FILL GASKETS [334]	1	
2	240101	PLATE – END COVER [335]	2	–371189
3	187112	GASKET [335]	2	–371189
4	248757	BRACKET – SUB WELDT (WELDED TO FRAME)	1	
5	21763	FASTENER – CABLE TIE (BLACK)	1	
6	135718	CAP – HYD SAE-16 ORFS	1	
7	248756	CLAMP – AUGER PIVOT	1	
8	304325	COVER – C/W DECAL	1	
9	295981	GAS SPRING	1	
10	213764	RETAINER – COVER	1	
A	320397	SCREW – HEX HD TFL M5 X 0.8 X 12-8.8-PLAIN (2022 AND LATER) [336]		421190–
	135873	SCREW – MCH HEX HD #10-32 X 1/2-GR5-AA1J (2021 AND PRIOR) [336]		–421189
B	REF	BOLT – HEX FLG HD TFL M10 X 1.5 X 16-8.8-A3L [337]		
C	136324	BOLT – HEX FLG HD TFL M6 X 1 X 20-10.9-A2L		
D	152668	NUT – HEX FLG CTR LOC M6 X 1-8-A2L		
E	152655	BOLT – HEX FLG HD M10 X 1.5 X 20-8.8-A3L		
F	184657	BOLT – RHSSN M10 X 1.5 X 20-8.8-A3L		
G	135799	NUT – HEX FLG CTR LOC M10 X 1.5-10-A3L		
H	135785	BOLT – RHSN M10 X 1.5 X 25-8.8-A3L		
J	184688	NUT – HEX NYLOC M8 X 1.25-8-A2L		

333. Remove cap and gasket covering fill hole during shipping (not shown). Retain six screws (MD #135873). Replace with oil filler cap (MD #133942) which comes complete with oil cap, filler neck, and gaskets. Use six screws saved from shipping cap to attach oil filler cap to frame. Oil filler cap comes shipped with frame or can be ordered as a replacement.
334. Includes two gaskets.
335. Service part only for units made in model year 2019 and prior.
336. Comes with cap and gasket covering fill hole during shipping. Can be ordered separately if needed as a replacement.
337. Refer to Section *112 Hydraulics – Frame Components, page 345*.

92 Feed Deck – Frame, Front Links, and Pivot Pins

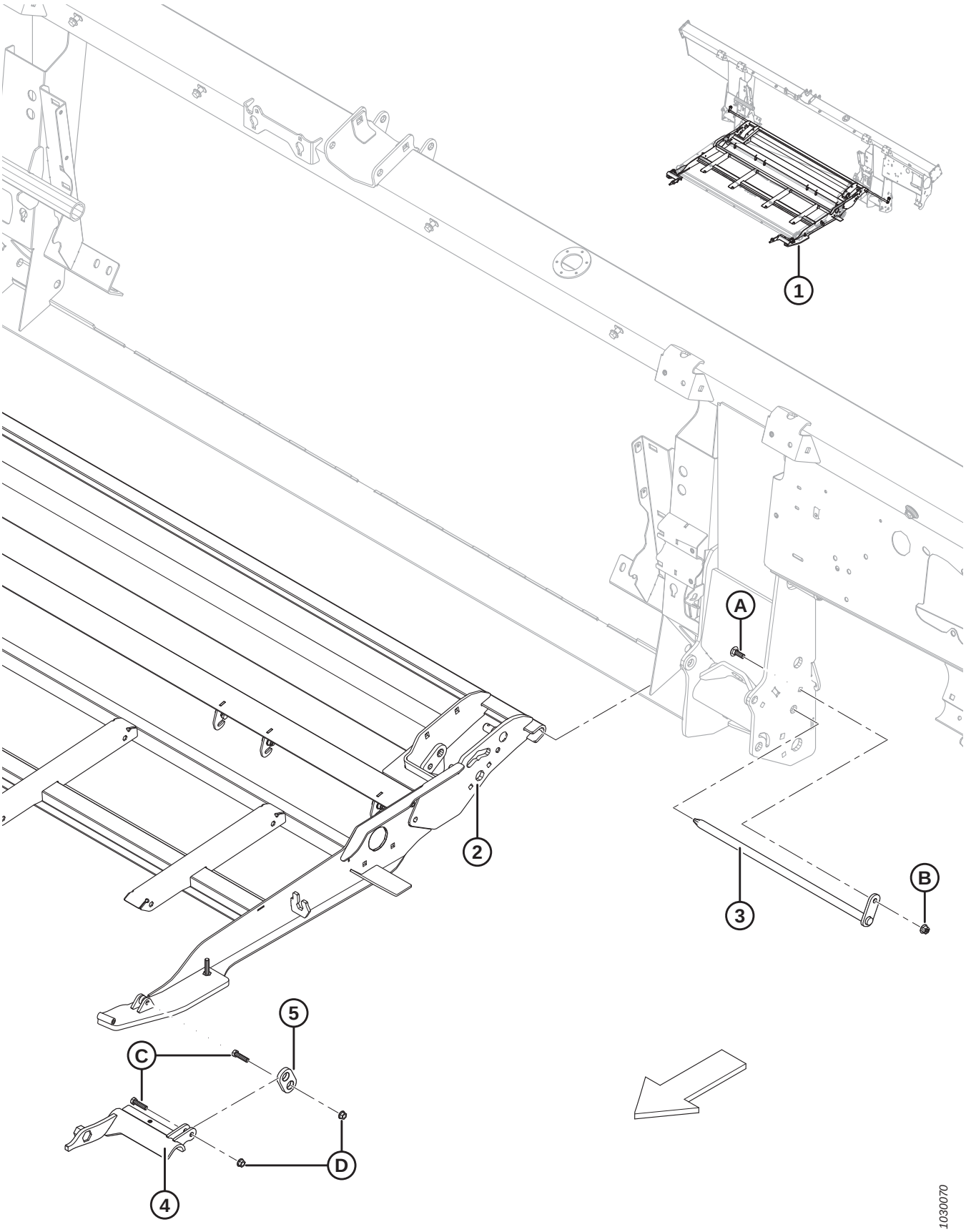

FEED DECK – FRAME, FRONT LINKS, AND PIVOT PINS

Ref	Part Number	Description	Qty	Serial Number
1	335286	ASSEMBLY – FEED DECK [338]		
2	287760	CARRIER – FEED DECK	1	
3	231368	PIN – DECK PIVOT WELDT	2	
4	213418	SUPPORT – LH ADAPTER LINK MACH	1	
	213419	SUPPORT – RH ADAPTER LINK MACH	1	
5	187732	LINK – HOOK ASSY	2	
A	184662	BOLT – RHSN TFL M10 X 1.5 X 30-8.8-A3L		
B	135799	NUT – HEX FLG CTR LOC M10 X 1.5-10-A3L		
C	20078	BOLT – HH 3/8 NC X 1.75 LG GR 5 ZP		
D	30228	NUT – FLANGE DT SMTH FACE 0.375-16 UNC		

338. Complete assembly, includes all listed parts from this section (except #3 and A-B) as well as Sections *93 Feed Deck – Draper Drive and Rollers, page 287* and *94 Feed Deck – Pans and Fillers, page 291*.

93 Feed Deck – Draper Drive and Rollers

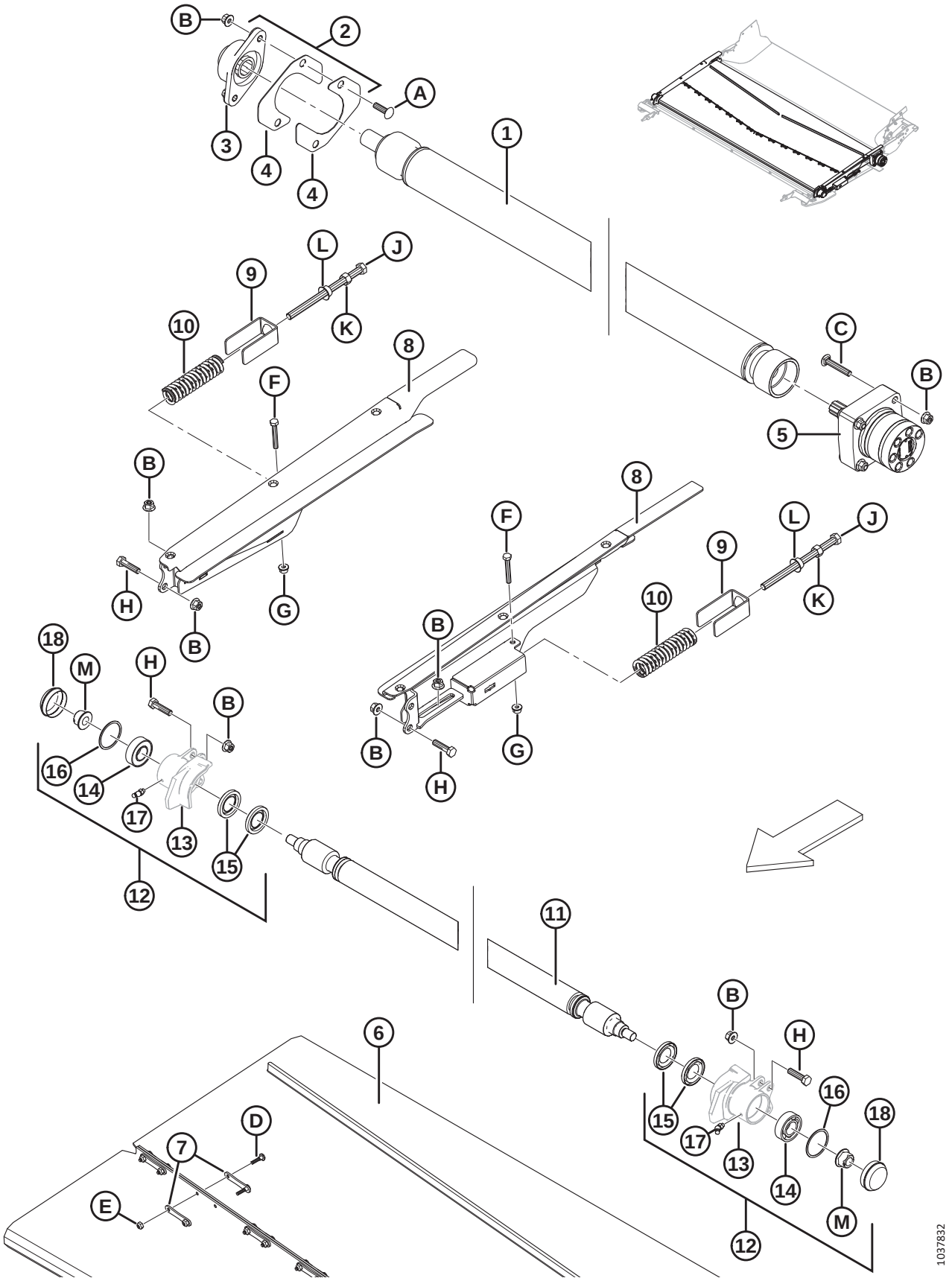

Ref	Part Number	Description	Qty	Serial Number
1	335637	KIT – ROLLER SERVICE [339]	1	
2	347565	KIT – FM100 DRIVE COVER [340]		
3	347487	HOUSING – FL206 AND BEARING [341]	1	
4	347339	COVER – DRIVE ROLLER FM100	2	
5	245122	MOTOR – HYD [342]	1	
	245316	SEAL KIT		
	304748	KIT – FEED DRAPER MOTOR SHIM	A/R	
6	304454	DRAPER – 1988 MM (78.3 IN.) W X 1712 MM LG	1	
7	130283	STRAP – DRAPER CONN	28	
8	335173	SUPPORT – IDLER ADJ WELDT LH	1	
	335171	SUPPORT – IDLER ADJ WELDT RH	1	
9	213734	RETAINER – SPRING	2	
10	287587	SPRING – COMPRESSION	2	
11	231647	ROLLER – IDLER WELDT	1	
12	287885	HOUSING – LH IDLER CUP ASSY	1	
	287883	HOUSING – RH IDLER CUP ASSY	1	
13	NSS	HOUSING – MACH IDLER CUP LH	1	
	NSS	HOUSING – MACH IDLER CUP RH	1	
14	118185	BEARING – BALL CYL, 52 MM O.D., 25 MM I.D.	2	
15	100862	SEAL – OIL	4	
16	118011	RING – RETAINING INTERNAL	2	
17	21301	FITTING – LUBRICATION	2	
18	133372	CAP – DUST	2	
A	136248	BOLT – RHSSN TFL M10 X 1.5 X 35-8.8-A3L		
B	135799	NUT – HEX FLG CTR LOC M10 X 1.5-10-A3L		
C	252701	BOLT – RHSSN TFL M10 X 1.5 X 60-8.8-A3L		
D	135630	SCREW – BHRN #12-24 NC X 0.920 IN. LG (50 PACK)		
E	135626	NUT – CSK CENTER LOCK #12-24 NC (50 PACK)		
F	184655	BOLT – HEX HD M8 X 1.25 X 55-8.8-A2L		
G	135337	NUT – HEX FLG CTR LOC M8 X 1.25-8-A2L		
H	135319	BOLT – HEX HD M10 X 1.5 X 40-8.8-A3L		
J	252272	BOLT – HEX HD TFL M12 X 1.75 X 180		
K	184694	NUT – HEX M12 X 1.75-8-A3L		

339. Kit includes drive roller and two drive roller covers (MD #347339). Roller alignment must be checked and feed draper motor shim kit (MD #304748) installed if required.
340. Kit includes two covers (MD #347339), cam latch washer (MD #273304), and FL206 housing and bearing (MD #347487).
341. Housing (MD 347487) will not work without covers (MD #347339) and cam latch washer (MD #273304). If replacing superseded bearing housing (MD #335178), order FM100 Drive Cover kit (MD #347565).
342. Roller alignment must be checked and feed draper motor shim kit (MD #304748) installed if required. Misalignment of the feed draper drive motor and drive roller causes stress in the motor shaft and roller bore, leading to premature wear and failure. The kit provides the required shims when replacing a failed feed draper drive motor or driver roller, or to correct misalignment between the drive motor and drive roller. See instruction MD #215035 for installation. Includes eight 0.6 mm shims (NSS), eight 0.4 mm shims (NSS), 4 flange nuts (MD #21452), and 4 hex nuts (MD #135927).

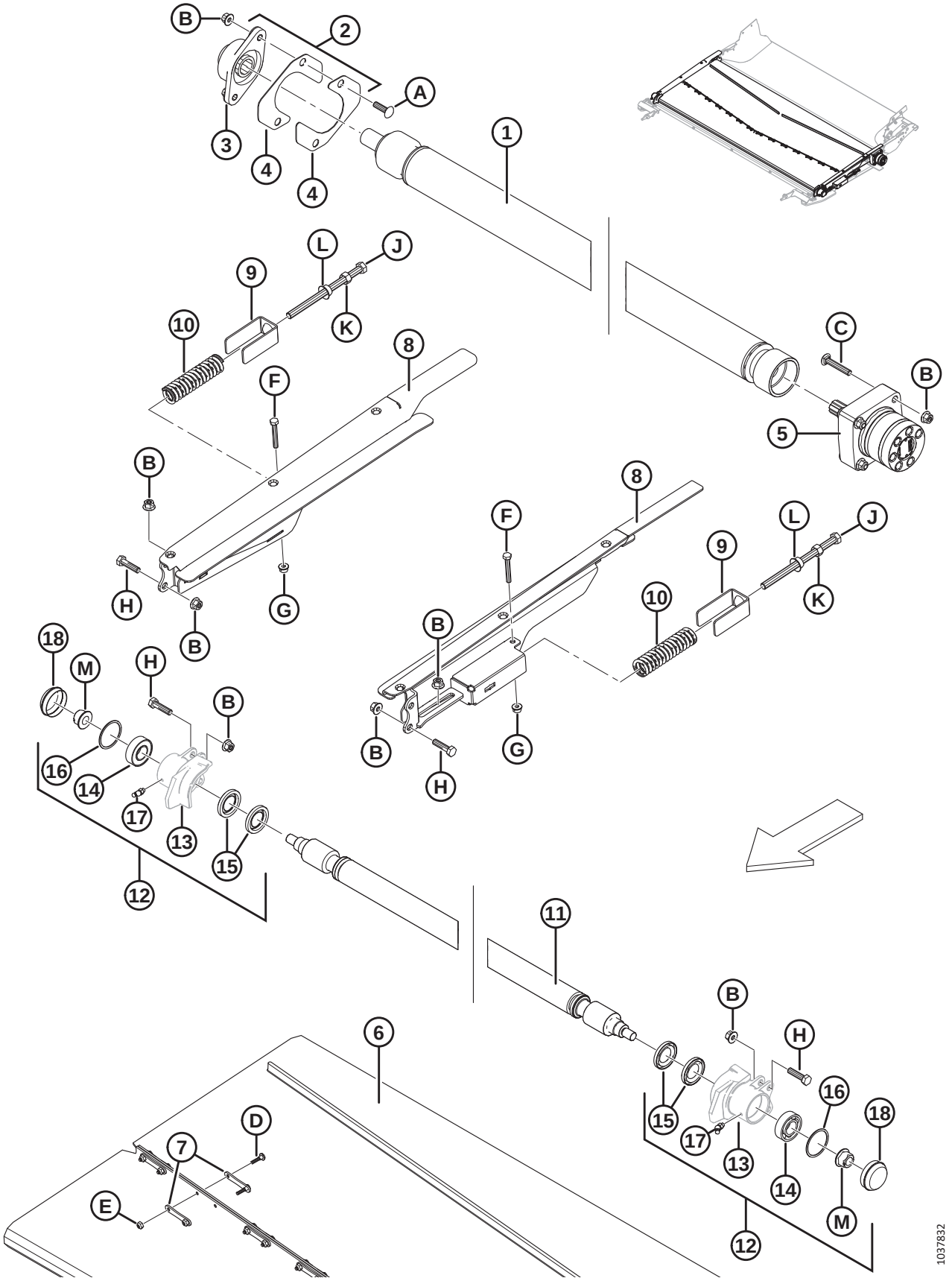
B
2
A
3
4
4
1
9
L
J
10
K
8
F
C
B
5
B
8
F
L
J
9
10
K
H
G
B
B
18
M
H
B
16
14
17
13
15
12
B
H
G
11
B
H
16
18
15
17
13
14
M
12
6
D
7
E
1037832

Ref	Part Number	Description	Qty	Serial Number
L	136036	NUT – HEX SMTH FLG M12 X 1.75-8-A3L		
M	152520	NUT – HEX FLG TECH LOC M16 X 2-10-A3L		

94 Feed Deck – Pans and Fillers

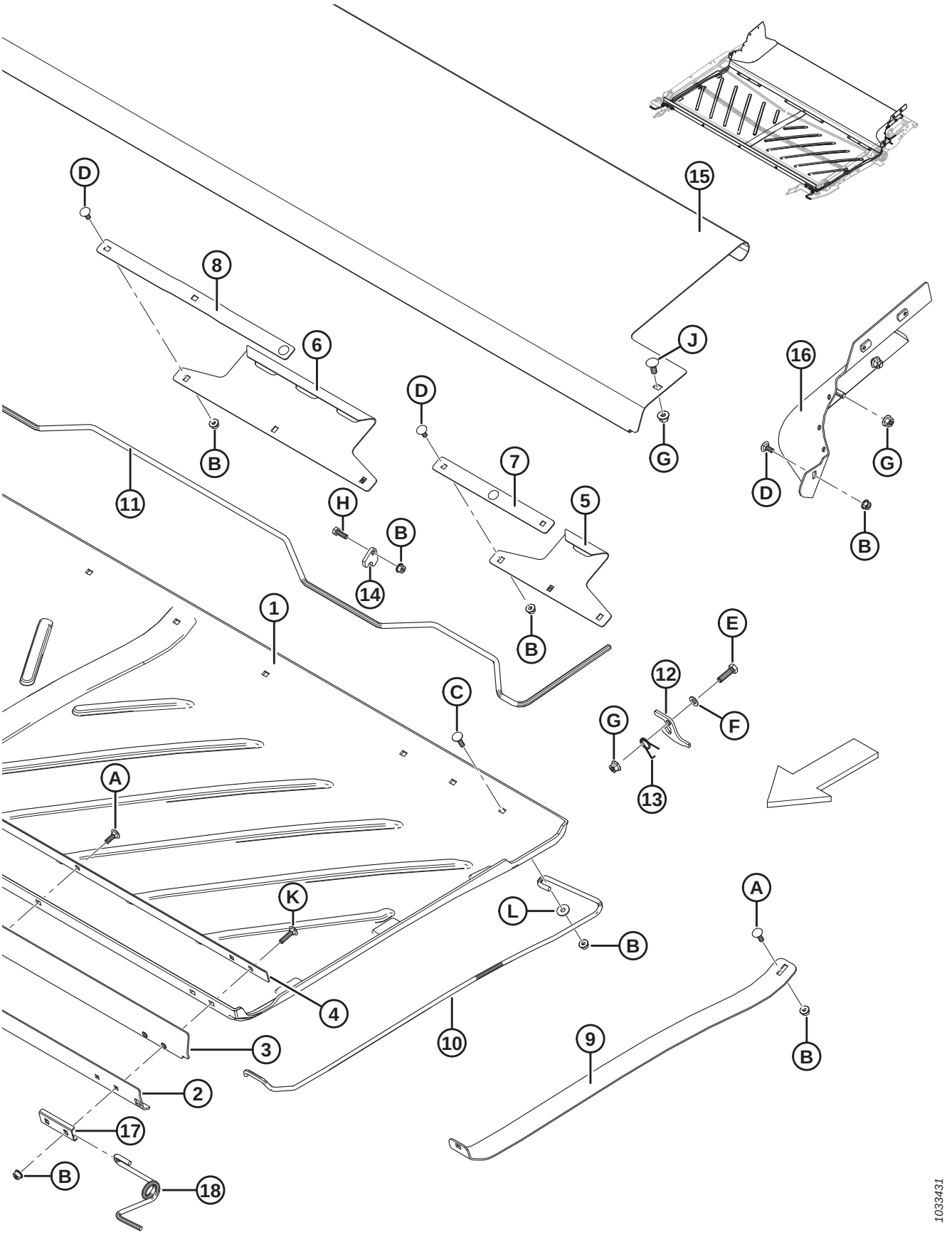

FEED DECK – PANS AND FILLERS

Ref	Part Number	Description	Qty	Serial Number
1	287768	PAN – FEED DECK POLYETHYLENE	1	
2	295211	PLATE – FRONT BAR OUTER	1	
3	295212	FLAP – PAN FRONT	1	
4	295213	PLATE – FRONT BAR INNER	1	
5	240013	HOOK – REAR SIDE	2	
6	240012	HOOK – REAR CENTER	1	
7	231765	BAR – SIDE HOOK	2	
8	231766	BAR – HOOK CENTER	1	
9	304382	SUPPORT – PAN LIFTER	1	
10	295215	SUPPORT – PAN SPRING LH	1	
	295216	SUPPORT – PAN SPRING RH	1	
11	240010	HANDLE – PAN LATCH	1	
12	240254	SUPPORT – PAN HANDLE LATCH	2	
13	159020	SPRING – TORSION LH	1	
	144505	SPRING – TORSION RH	1	
14	248914	GUIDE – HANDLE LOCK	6	
15	240264	PAN – FEED DECK STAINLESS	1	
16	304927	FILLER – RH REAR CORNER WELDT	1	
	304926	FILLER – LH REAR CORNER WELDT	1	
17	287939	RETAINER – FRONT SPRING	2	
18	347691	SUPPORT – PAN FRONT SPRING RH	1	
	347692	SUPPORT – PAN FRONT SPRING LH	1	
A	184648	BOLT – RHSN M8 X 1.25 X 25-8.8-A3L		
B	135337	NUT – HEX FLG CTR LOC M8 X 1.25-8-A2L		
C	190752	BOLT – RHSN M8 X 1.25 X 30-8.8-A2L		
D	197171	BOLT – RHSN M8 X 1.25 X 20-8.8-A2L		
E	30628	BOLT – HEX HD M10 X 1.5 X 35-8.8-A3L		
F	184711	WASHER – FLAT REG M10-200HV-A3L		
G	135799	NUT – HEX FLG CTR LOC M10 X 1.5-10-A3L		
H	184652	BOLT – HEX HD TFL M8 X 1.25 X 25-8.8-A2L		
J	135785	BOLT – RHSN M10 X 1.5 X 25-8.8-A3L		
K	136050	BOLT – RHSN M8 X 1.25 X 35-8.8-A2L		
L	184709	WASHER – FLAT LARGE M8-200HV-A2L		

95 Float Module – Transition Pan

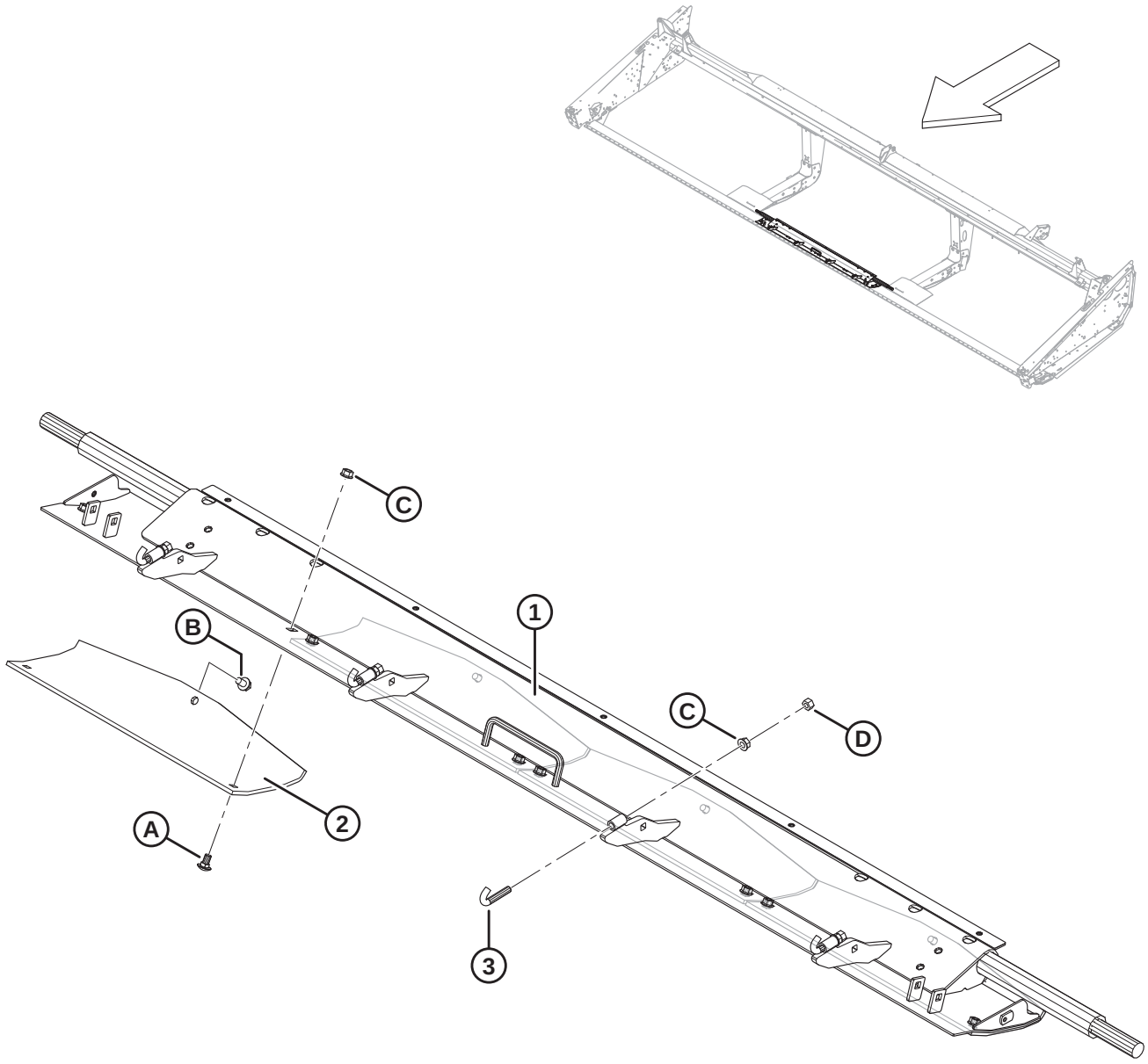

1024662

FLOAT MODULE – TRANSITION PAN

Ref	Part Number	Description	Qty	Serial Number
	B6203	KIT – COMBINE ATTACHING RIGID [343]		
1	213234	PAN – RIGID TRANSITION WELDT	1	
2	151551	SHOE – SKID	4	
3	156868	J-BOLT – 3/8 NC	4	
A	21472	BOLT – RHSN 3/8-16 X .75-GR5		
B	101898	SCREW – HEX WASH HD THD ROLLING 3/8 NC X 5/8		
C	30228	NUT – FLG DT SMTH FACE 0.375-16 UNC		
D	18590	NUT – HEX 3/8-16 UNC GR 5 ZP		

343. Includes all listed parts in this section as well as Sections *96 Float Module – Attaching Parts, page 295*, *97 Float Module – Center and Corner Fillers, page 297*, and *98 Float Module – Side Fillers, page 299*. Kits available through Whole Goods only.

96 Float Module – Attaching Parts

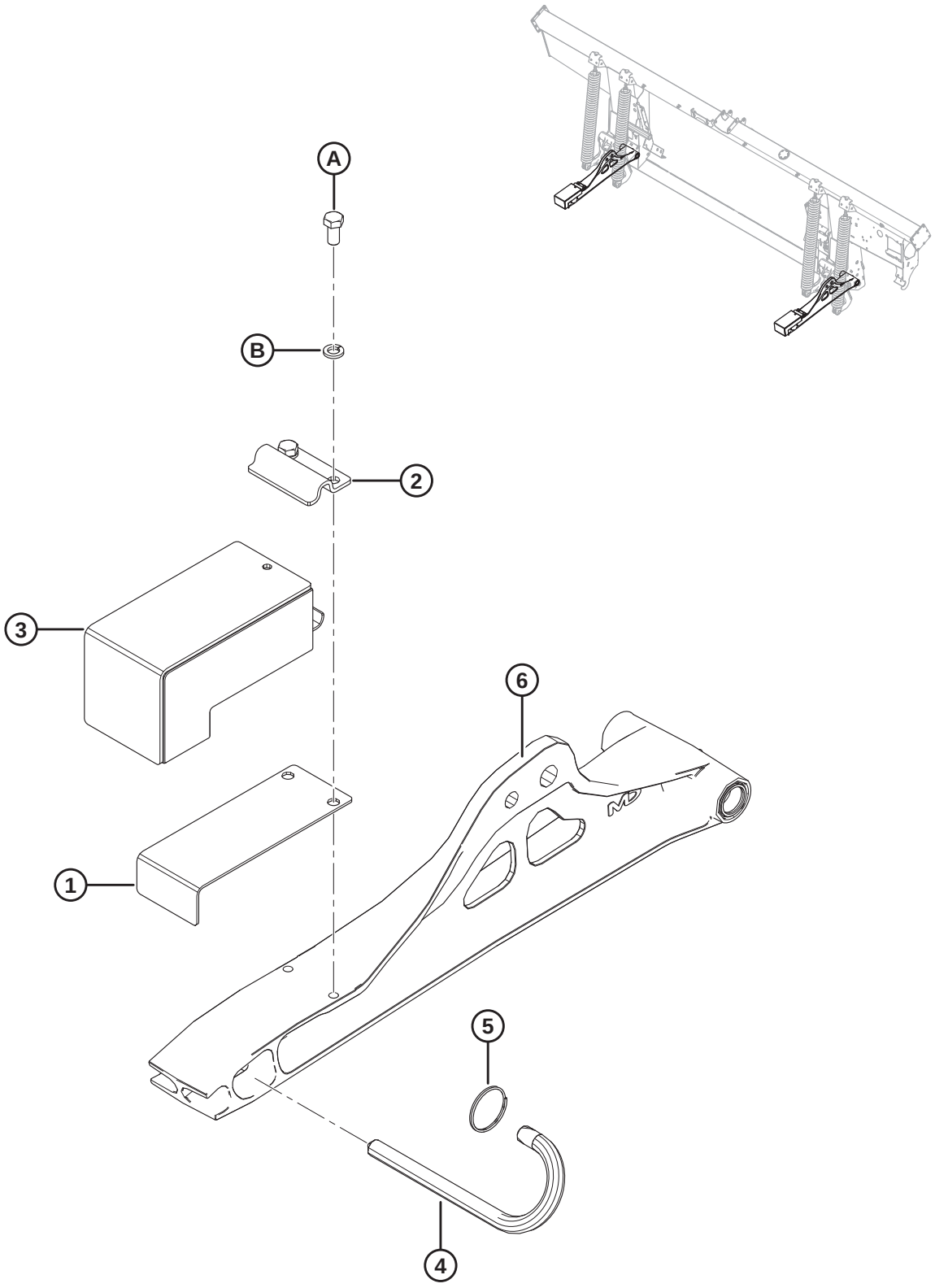

FLOAT MODULE – ATTACHING PARTS

Ref	Part Number	Description	Qty	Serial Number
1	125145	PLATE – LEAF SPRING	2	
2	125146	CLAMP	2	
3	174775	ASSY – RUBBER BLOCK RIGID	2	
4	124399	PIN – LOCKING	2	
5	118137	RING – RETAINING	2	
6	REF	LINK – LOWER, C/W BEARINGS [344]		
A	21575	BOLT – HH 1/2 NC X 1.0 LG GR 5 ZP		
B	18638	WASHER – REG. LOCK 1/2 IN. NOM. I.D. ZP		

344. Refer to Section *119 Float Linkage and Components, page 361*.

97 Float Module – Center and Corner Fillers

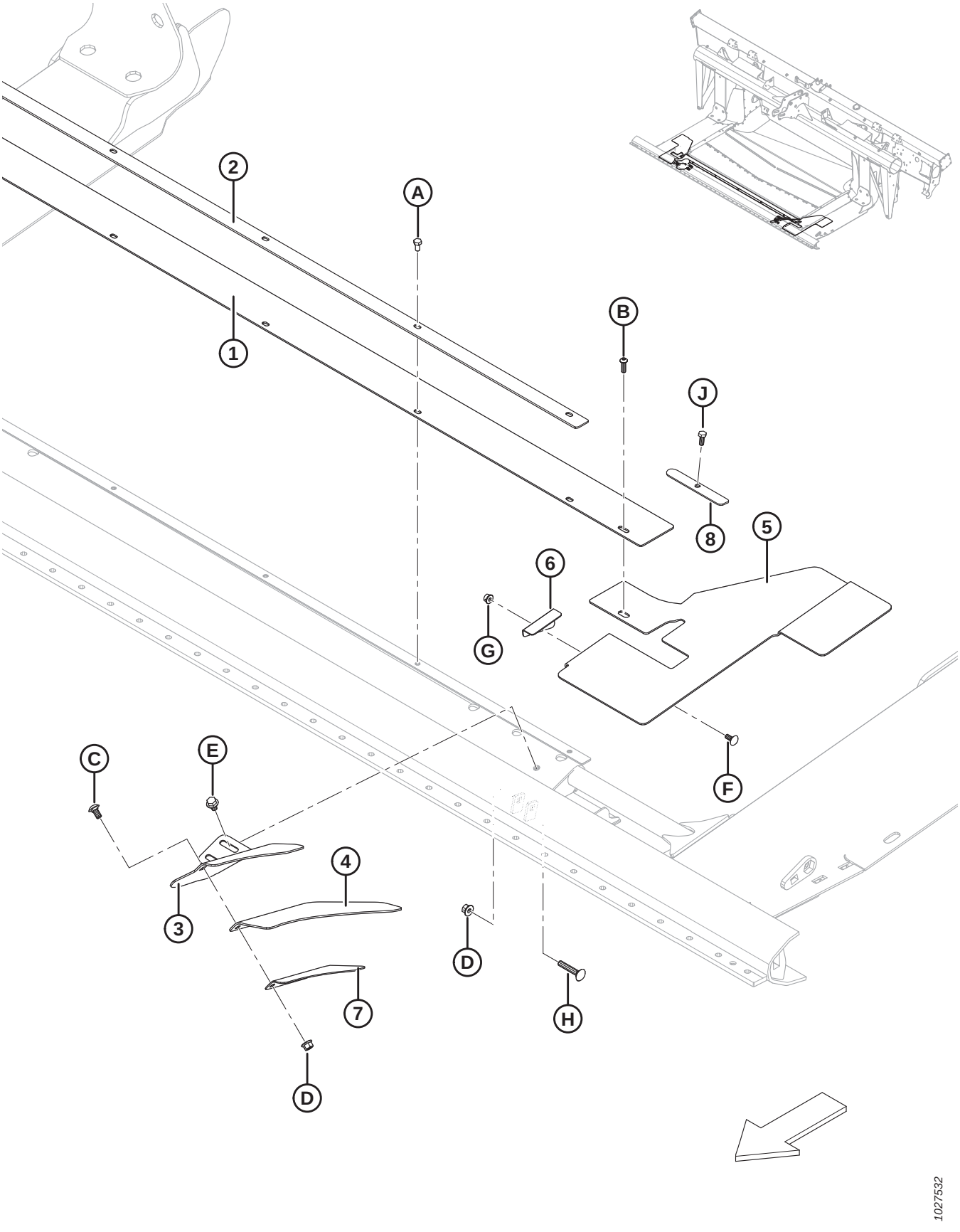

FLOAT MODULE – CENTER AND CORNER FILLERS

Ref	Part Number	Description	Qty	Serial Number
	B6450	KIT – EXTENDED CENTER FILLER [345]		
1	295261	FILLER – PAN CENTER	1	
	295542	FILLER – PAN CENTER, EXTENDED [346]	1	
2	301126	RETAINER – CENTER FILLER	1	
3	231799	SUPPORT – LH CORNER FILLER	1	
	231800	SUPPORT – RH CORNER FILLER	1	
4	304040	FLAP – CORNER FILLER	2	
5	287775	FLAP – RH PAN CORNER RIGID	1	
	287776	FLAP – LH PAN CORNER RIGID	1	
6	276117	RETAINER – PAN FLAP LH	1	
	276062	RETAINER – PAN FLAP RH	1	
7	213340	RETAINER – CORNER FILLER LH	1	
	240418	RETAINER – CORNER FILLER RH	1	
8	301127	PLATE – FILLER RETAINER	2	
A	50139	BOLT – HEX HD TFL M8 X 1.25 X 16-8.8-A2L		
B	184649	SCREW – HEX SOC BTN HD M8 X 1.25 X 25-12.9-A2L		
C	184657	BOLT – RHSSN M10 X 1.5 X 20-8.8-A3L		
D	135799	NUT – HEX FLG CTR LOC M10 X 1.5-10-A3L		
E	136231	BOLT – HEX SER FLG HD M10 X 1.5 X 16-8.8-A3L		
F	197171	BOLT – RHSN M8 X 1.25 X 20-8.8-A2L		
G	135337	NUT – HEX FLG CTR LOC M8 X 1.25-8-A2L		
H	136113	BOLT – RHSN M10 X 1.5 X 60-8.8-A3L		
J	30715	BOLT – HEX HD TFL M8 X 1.25 X 20-8.8-A2L		

345. Includes extended pan center filler (MD #295542) and installation instructions. Kits available through Whole Goods only.
346. Longer center filler pan required in certain conditions (e.g. soybean).

98 Float Module – Side Fillers

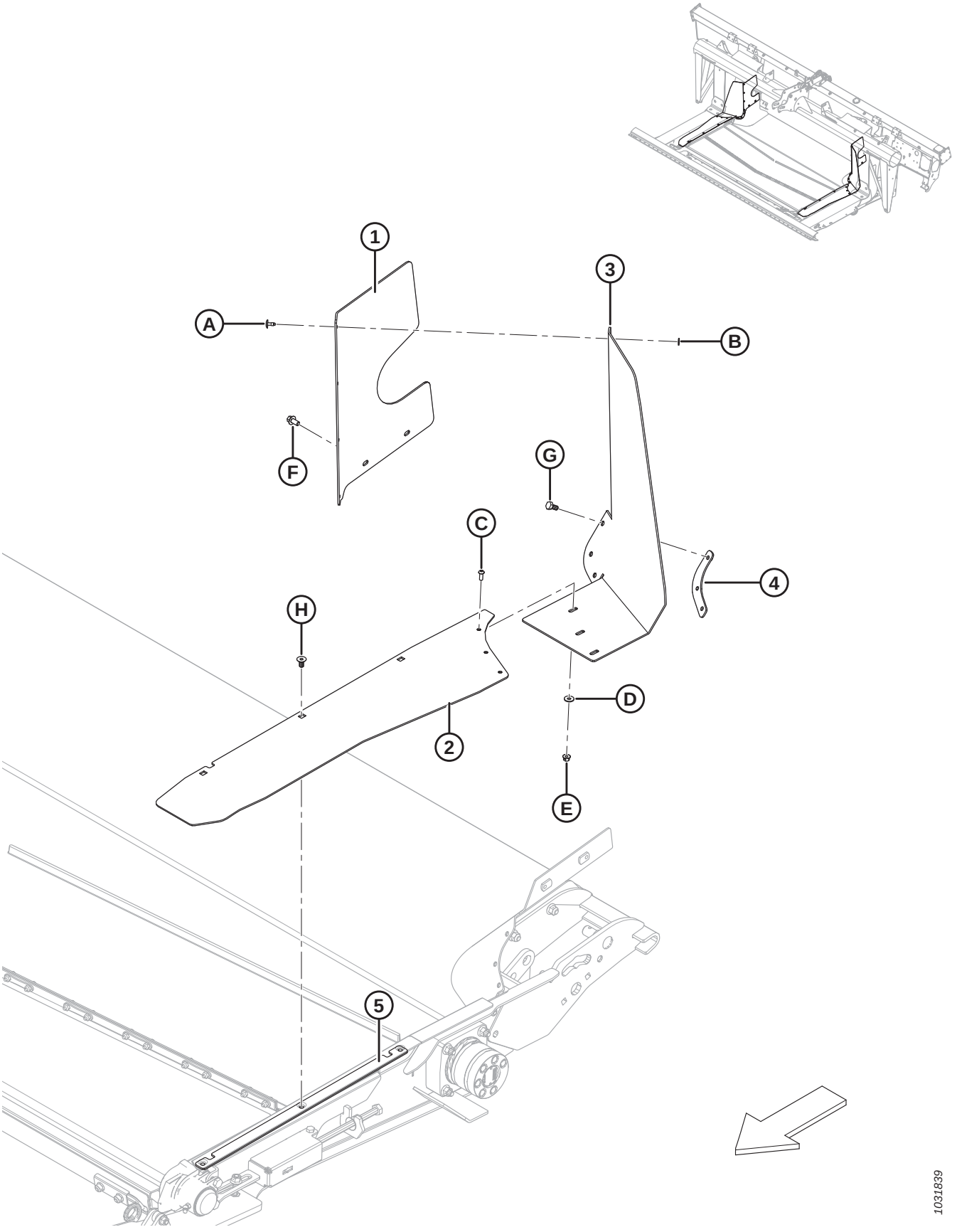

FLOAT MODULE – SIDE FILLERS

Ref	Part Number	Description	Qty	Serial Number
1	213492	FILLER – LH REAR UPPER	1	
	213493	FILLER – RH REAR UPPER	1	
2	304161	FILLER – DECK SIDE LH RIGID	1	
	304160	FILLER – DECK SIDE RH RIGID	1	
3	276302	FLAP – DECK LH SIDE RIGID	1	
	276301	FLAP – DECK RH SIDE RIGID	1	
4	304779	PLATE – FLAP RETAINER LH	1	
	304775	PLATE – FLAP RETAINER RH	1	
5	304786	PLATE – SIDE FILLER RETAINER	2	
A	293053	RIVET – POP		
B	293054	WASHER – FLAT LARGE M5-200HV-AA1J		
C	136886	SCREW – HEX SOC M6 X 1 X 16-10.9-ZB		
D	184706	WASHER – FLAT LARGE M6-200HV-A2L		
E	152668	NUT – HEX FLG CTR LOC M6 X 1-8-A2L		
F	136485	BOLT – HEX FLG HD TFL M8 X 1.25 X 16-8.8-A3L		
G	50139	BOLT – HEX HD TFL M8 X 1.25 X 16-8.8-A2L		
H	252542	SCREW – HEX SOC CSK HD TFL M8 X 1.25 X 16-10.9-AA2L		

99 Auger Assembly and Completion

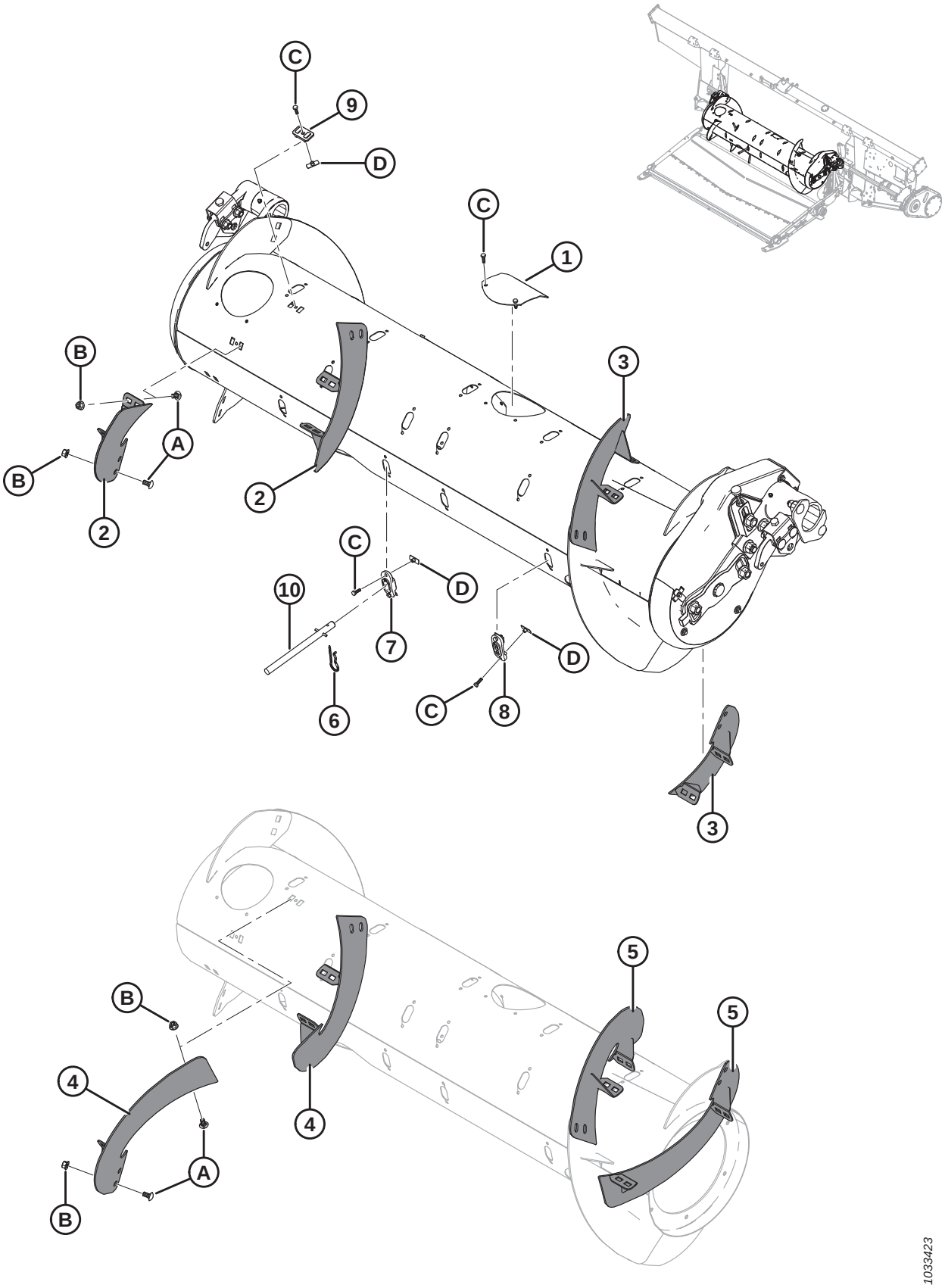

Ref	Part Number	Description	Qty 335244/335245/308871	Serial Number
	335242	AUGER DRIVE ASSEMBLY WITH MAGNETIC SHIELD (BASE ONLY) [347]		
	335244	KIT – COMPLETION, MEDIUM AUGER [348]	1/0/0	
	335245	KIT – COMPLETION, WIDE AUGER [348]	0/1/0	
	308871	KIT – COMPLETION, NARROW AUGER [348]	0/0/1	
1	304494	COVER WELDMENT	6/6/6	
2	287887	FLIGHTING, RTD – RH, MED (HIWEAR)	2/1/0	
3	287888	FLIGHTING, RTD – LH, MED (HIWEAR)	2/1/0	
4	287890	FLIGHTING, RTD – RH, LONG (HIWEAR)	0/0/2	
5	287889	FLIGHTING, RTD – LH, LONG (HIWEAR)	0/0/2	
6	123180	PIN – HAIR	4/12/0	
7	337143	GUIDE	4/12/0	
8	187137	PLUG	8/0/12	
9	213084	PLUG – FLIGHTING SLOT	4/8/4	
10	337152	KIT – FINGER [349]	4/12/0	
	7642	PIN – SPRING 3/16 DIA X 1.5 LG		
A	184657	BOLT – RHSSN M10 X 1.5 X 20-8.8-A3L		
B	135799	NUT – HEX FLG CTR LOC M10 X 1.5-10-A3L		
C	252703	BOLT – HEX HD TFL M6 X 1 X 20 X SPCL-12.9-A2L		
D	197263	NUT – TEE M6 X 1		

347. Includes all listed parts in Section *101 Auger Internal Components, page 305*, and Section *102 Auger Assembly – Service Parts, page 307*. Auger drive assembly (MD #335242) is a base configuration **ONLY** and contains parts common to medium, wide, and narrow augers. Completion kits (MD #335244, 335245, or 308871) are optional as a repair and are required only if flighting components are damaged. To replace the entire auger assembly (including flighting components) for your specific combine, refer to Table *100.1, page 304* in Section *100 Auger Assembly and Completion – Configuration, page 303* to determine which combination of base auger drive assembly (MD #335242) and completion kits (MD #335244, 335245, or 308871) is required.
348. Includes all listed parts and hardware. See parts list for quantities specific to completion kit.
349. Includes solid finger (not sold separately), spring pin (MD #7642), guide (MD #337143), and instructions.

100 Auger Assembly and Completion – Configuration

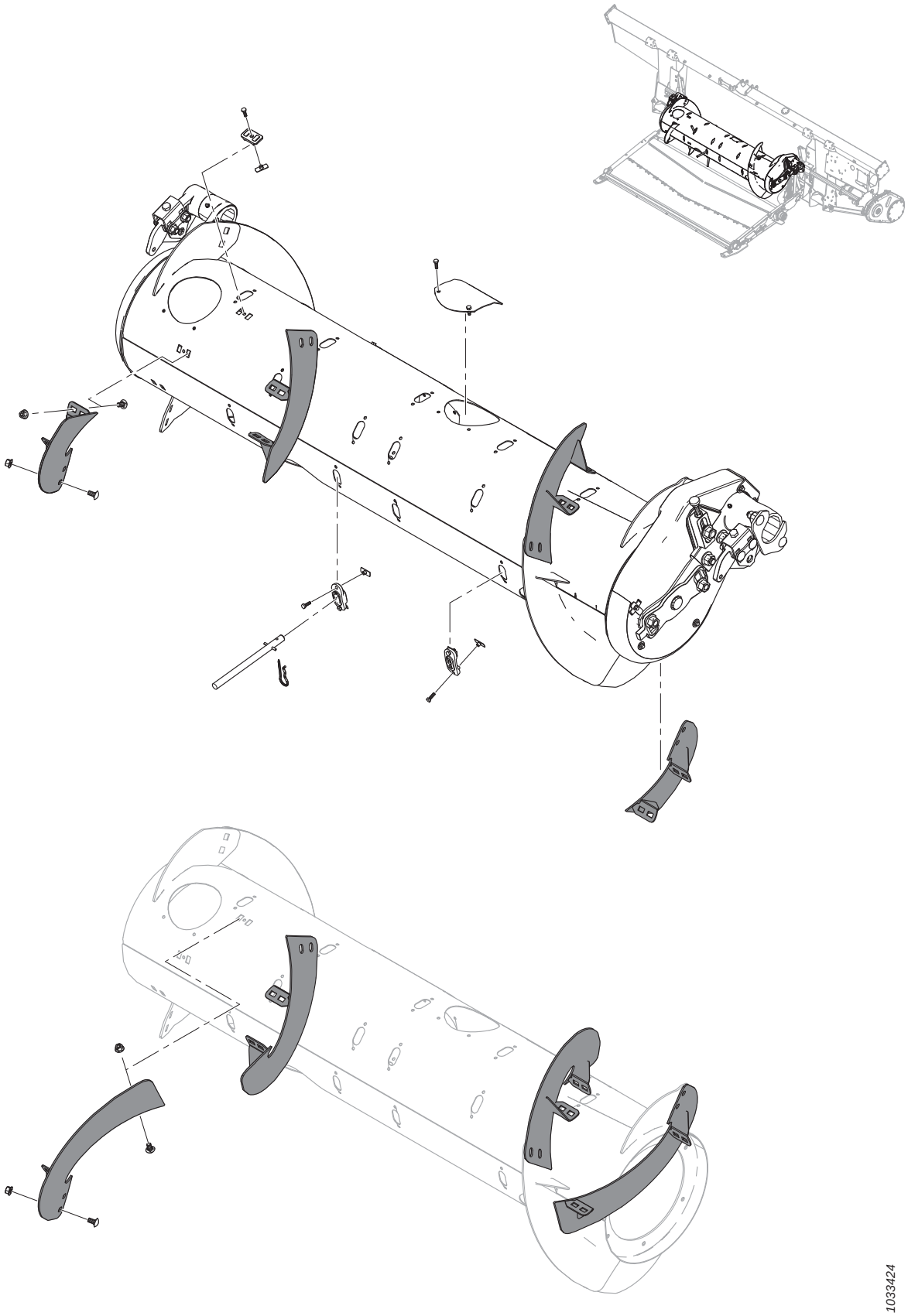

Table 100.1 Configuration Chart

NOTE:

Auger drive assembly (MD #335242) is a base configuration **ONLY** and contains parts common to medium, wide, and narrow augers. Completion kits (MD #335244, 335245, or 308871) are optional as a repair and are required only if flighting components are damaged. To replace the entire auger assembly (including flighting components) for your specific combine, refer to the table below to determine which combination of base auger drive assembly (MD #335242) and completion kits (MD #335244, 335245, or 308871) is required. For completion kits service parts, refer to Section *99 Auger Assembly and Completion, page 301*.

NOTE:

For combines where completion kit (MD #335245) is available as an option, completion kit (MD #335244) is recommended for most crop conditions but completion kit (MD #335245) may increase combine capacity on wide feeder house combines in high volume crop conditions.

Combine Model	Kit MD # 335242	Kit MD # 335244	Kit MD # 335245	Kit MD # 308871
CASE IH 5/6/7088, 7/8010, 7/8/9120, 5/6/7130, 7/8/9230, 5/6/7140, 7/8/9240	1	1	—	—
NEW HOLLAND CR 970/980, 9070/9080, 8090/9090, X.90, X.80	1	1	—	—
NEW HOLLAND CR 920/940/960, 9020/40/60/65, 6090/7090, 8060/8070/8080	1	—	—	1
NEW HOLLAND CX 8X0, 80X0, 8.X0	1	1	OPT	—
JOHN DEERE 95/96/97/9860, 95/96/9870, S65/66/67/68/690	1	1	—	—
JOHN DEERE T670	1	1	OPT	—
CLAAS 590R/595R, 660/670, 760/770/780	1	1	OPT	—
CLAAS 56/57/580R, 57/585R, 62/63/64/650, 73/74/750	1	1	—	—
AGCO CHALLENGER 660B	1	1	—	—
AGCO CHALLENGER 67/680B, 54/560C, 54/560E	1	1	OPT	—
AGCO MASSEY FERGUSON 96/9795, 9520	1	1	—	—
AGCO MASSEY FERGUSON 9895, 9540, 9560, 9545, 9565, 9380	1	1	OPT	—
AGCO GLEANER R6/75, R6/76, S6/77, S6/7/88, S96/7/8	1	—	—	1
AGCO IDEAL™ 7/8/9	1	OPT	—	1
VERSATILE RT490	1	1	—	—

101 Auger Internal Components

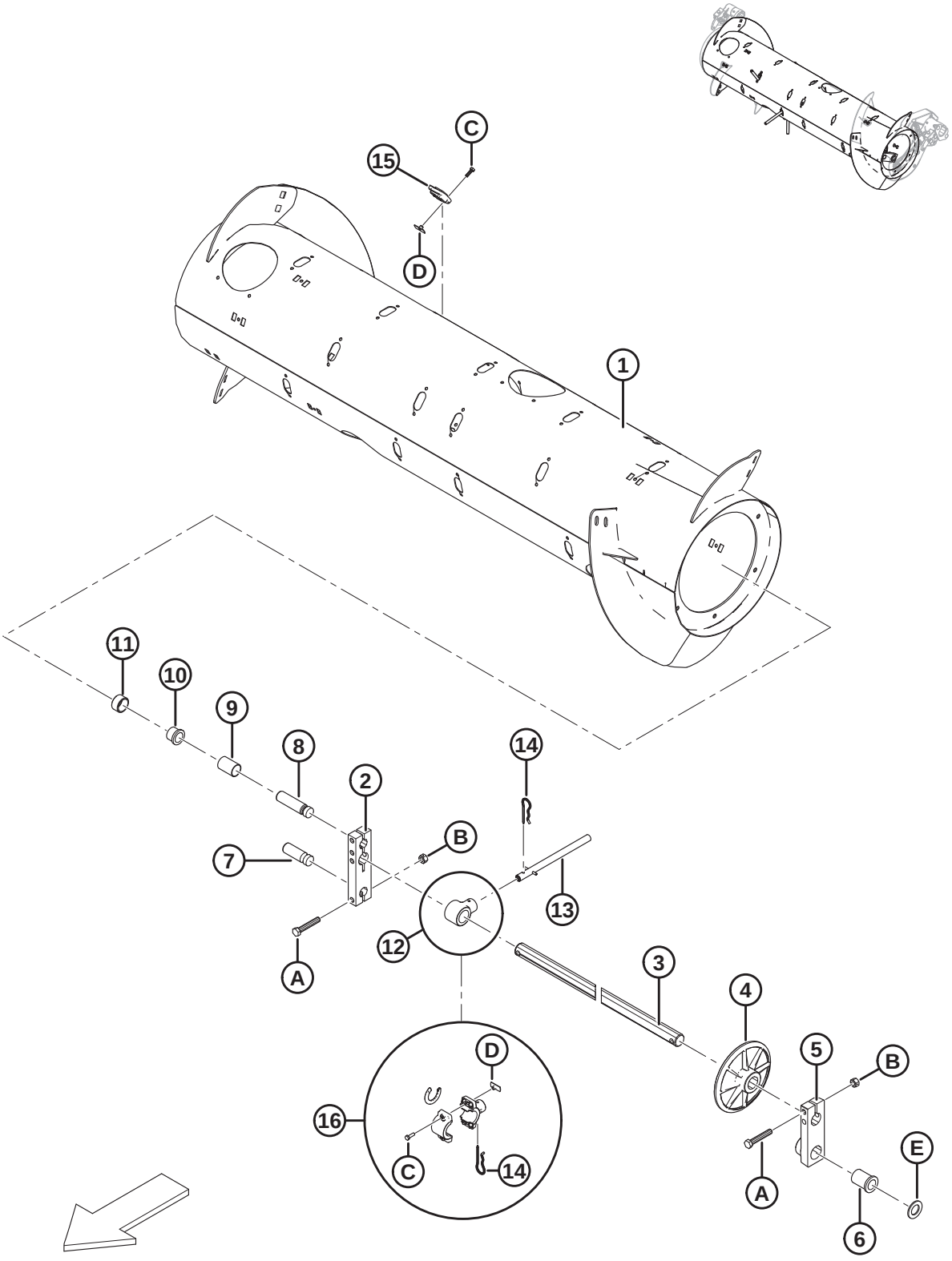

AUGER INTERNAL COMPONENTS

Ref	Part Number	Description	Qty	Serial Number
	335242	ASSY – AUGER DRIVE WITH MAGNETIC SHIELD, PARTS ONLY [350]		
1	308642	DRUM – 14 IN. WELDMENT	1	
2	213608	BLOCK – AUGER SHAFT	1	
3	213605	SHAFT – FINGER	1	
4	248117	WHEEL – GUIDE, FINGER SHAFT	1	
5	248538	CASTING – PIVOT BLOCK, LH, MACHINING	1	
6	248145	BUSHING – FLANGE	1	
7	248096	PIN – PIVOT	1	
8	213660	PIN – PIVOT	1	
9	213657	SPACER	1	
10	133877	BUSHING – PLASTIC FLANGED 1.0 IN.	1	
11	213656	ROLLER	1	
12	337206	HOLDER – AUGER FINGER (2021 AND LATER) [351]	32	396190–
	276265	HOLDER – AUGER FINGER (2020 AND PRIOR) [352]	32	–396189
13	337152	KIT – FINGER [353]	18	
	7642	PIN – SPRING 3/16 DIA X 1.5 LG	A/R	
14	123180	PIN – HAIR	18	
15	337143	GUIDE	18	
16	276839	KIT – FINGER HOLDER SPLIT 5X (BAG OF 5) [354]	32	
A	184675	BOLT – HEX HD M12 X 1.75 X 70-8.8-A3L		
B	136759	NUT – HEX CTR LOC M12 X 1.75-8-A3L		
C	252703	BOLT – HEX HD TFL M6 X 1 X 20 X SPCL-12.9-A2L		
D	197263	NUT – TEE M6 X 1		
E	156743	WASHER – FLAT [355]		

350. Includes all parts listed in Section *101 Auger Internal Components, page 305* and Section *102 Auger Assembly – Service Parts, page 307*. Auger drive assembly (MD #335242) is a base configuration **ONLY** and contains parts common to medium, wide, and narrow augers. Completion kits (MD #335244, 335245, or 308871) are optional as a repair and are required only if flighting components are damaged. To replace the entire auger assembly (including flighting components) for your specific combine, refer to Section *99 Auger Assembly and Completion, page 301*
351. For model year 2021 and later.
352. For model year 2020 and prior.
353. Includes solid finger (not sold separately), spring pin (MD #7642), guide (MD #337143), and instructions.
354. Used to simplify field replacement of broken one-piece solid finger holders (MD #337206). Includes split auger finger holder (NSS), holder spacers (NSS), hair pin (MD #123180), tee nut (MD #197263), and bolt (MD #252703).
355. Washer (MD #156743) is used if tolerance on bushing (MD #248145) is exceeded. Use washer(s) as required to achieve correct tolerance.

102 Auger Assembly – Service Parts

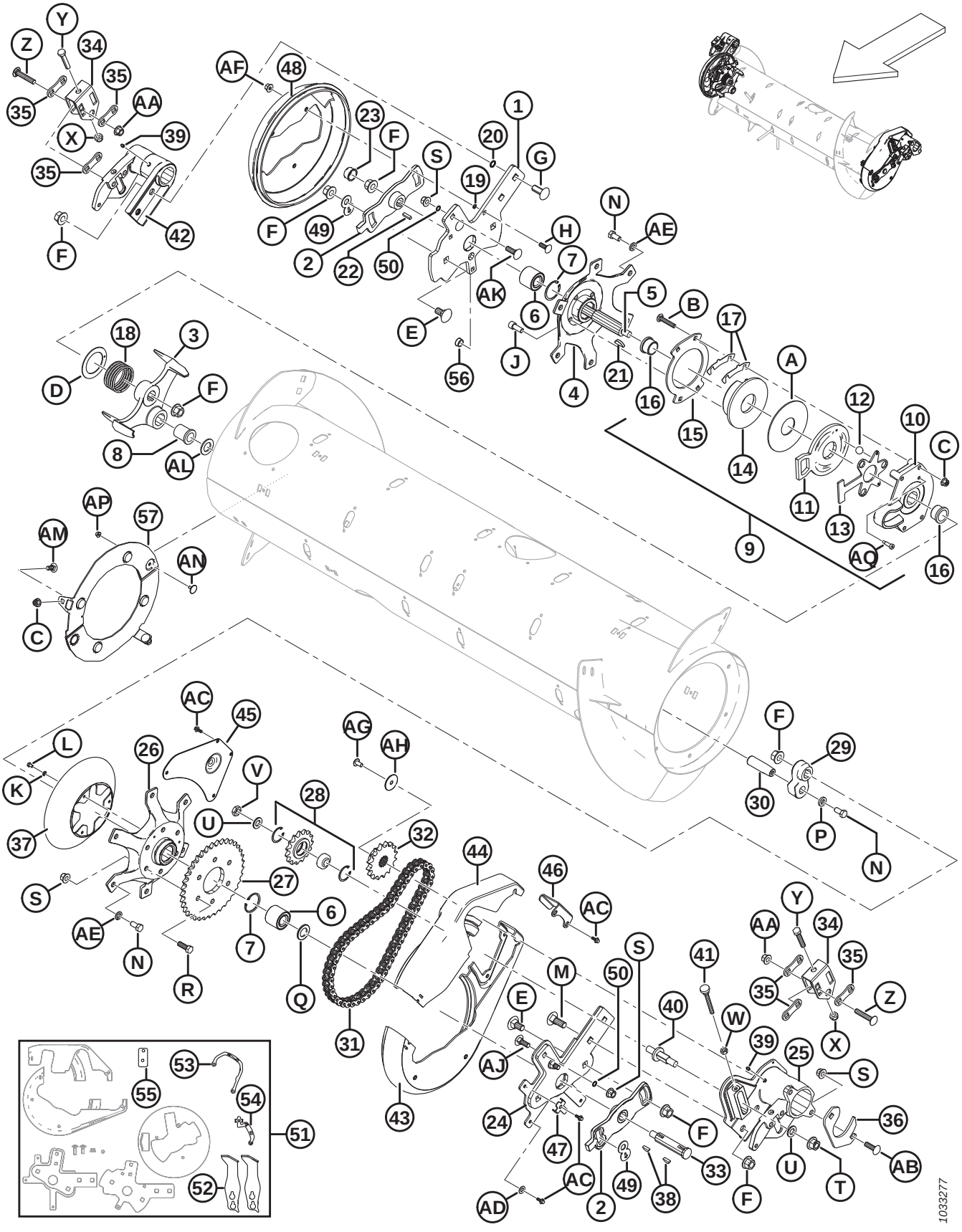

AUGER ASSEMBLY – SERVICE PARTS

Ref	Part Number	Description	Qty	Serial Number
	335242	ASSY – AUGER DRIVE WITH MAGNETIC SHIELD, PARTS ONLY [356]		
	B6600	KIT – FM100 RTD UP-STOP BUMPER KIT [357]		
1	308134	KIT – SERVICE, AUGER ARM, RH (2017 AND PRIOR) [358]	1	–321189
	308850	BAR – RH AUGER SUPPORT (2018 AND LATER)	1	321190–
2	213851	CASTING – TIMING PLATE, MACHINED	2	
3	304520	CASTING – STOP, MACHINING [359]	1	
4	213546	HUB – MACHINING RH	1	
5	304514	SHAFT – AUGER	1	
6	132607	BEARING – DOUBLE ROW BALL 52 OD X 25 BORE	2	
7	21235	RING – INT RETAINING	2	
8	213659	BUSHING – FLANGE	1	
9	213802	ASSEMBLY – REVERSING CLUTCH [360]	1	
10	213649	CLUTCH HOUSING – CAST, MACH	1	
11	213801	ARM – CLUTCH ACTIVATOR, MACH	1	
12	248285	BALL	3	
13	213557	PLATE – BALL CAGE	1	
14	213552	DISC – BRAKE, MACHINING	1	
15	213554	DISC – CLUTCH	1	
16	213859	BUSHING – PLASTIC (1 X 1.5 X 1.0 WITH FLANGE)	2	
17	276206	SHIM – CLUTCH	6	
18	213679	SPRING – COMPRESSION	1	
19	183506	O-RING – HNBR (GREEN)	3	
20	50083	O-RING	2	
21	213654	KEY – WOODRUFF (1/4 X 1-1/4 NOM.)	1	
22	213750	KEY – RECT. 6.35 MM SQ 24 MM LG	1	

356. Includes all parts listed in Section *101 Auger Internal Components, page 305*, and Section *102 Auger Assembly – Service Parts, page 307*. Auger drive assembly (MD #335242) is a base configuration **ONLY** and contains parts common to medium, wide, and narrow augers. Completion kits (MD #335244, 335245, or 308871) are optional as a repair and are required only if flighting components are damaged. To replace the entire auger assembly (including flighting components) for your specific combine, refer to Section *99 Auger Assembly and Completion, page 301*.
357. Kit includes two bumpers (MD #301912), RH indicator plate (MD #276180, LH indicator plate (MD #276183), spacer plate (MD #308056), and instructions. For units made in model year 2017 and prior, order RTD Bumper Conversion kit (MD #308187). Kits available through Whole Goods only.
358. Kit includes RH auger support bar (MD #308850), RH auger end cap cover (MD #301994), two O-rings (MD #183508), and hardware (MD #135900, 136431). If your machine is model year 2017 and prior and kit MD #308187 (bumpers and indicator plates) has been installed, order RH auger support bar (MD #308850). If kit is not installed, order RH auger arm service kit (MD #308134).
359. Stop casting arm (MD #304520) and finger shaft crank arm (MD #304521) must be replaced in pairs if replacing either arm for machines made in model year 2019 and prior.
360. Includes housing (MD #213649), arm (MD #213801), ball cage (MD #213557), discs (MD #213552, 213554), two bushings (MD #213859), three balls (MD #248285), six shims (MD #276206), plastic washer (MD #213731), and hardware.

AUGER ASSEMBLY – SERVICE PARTS

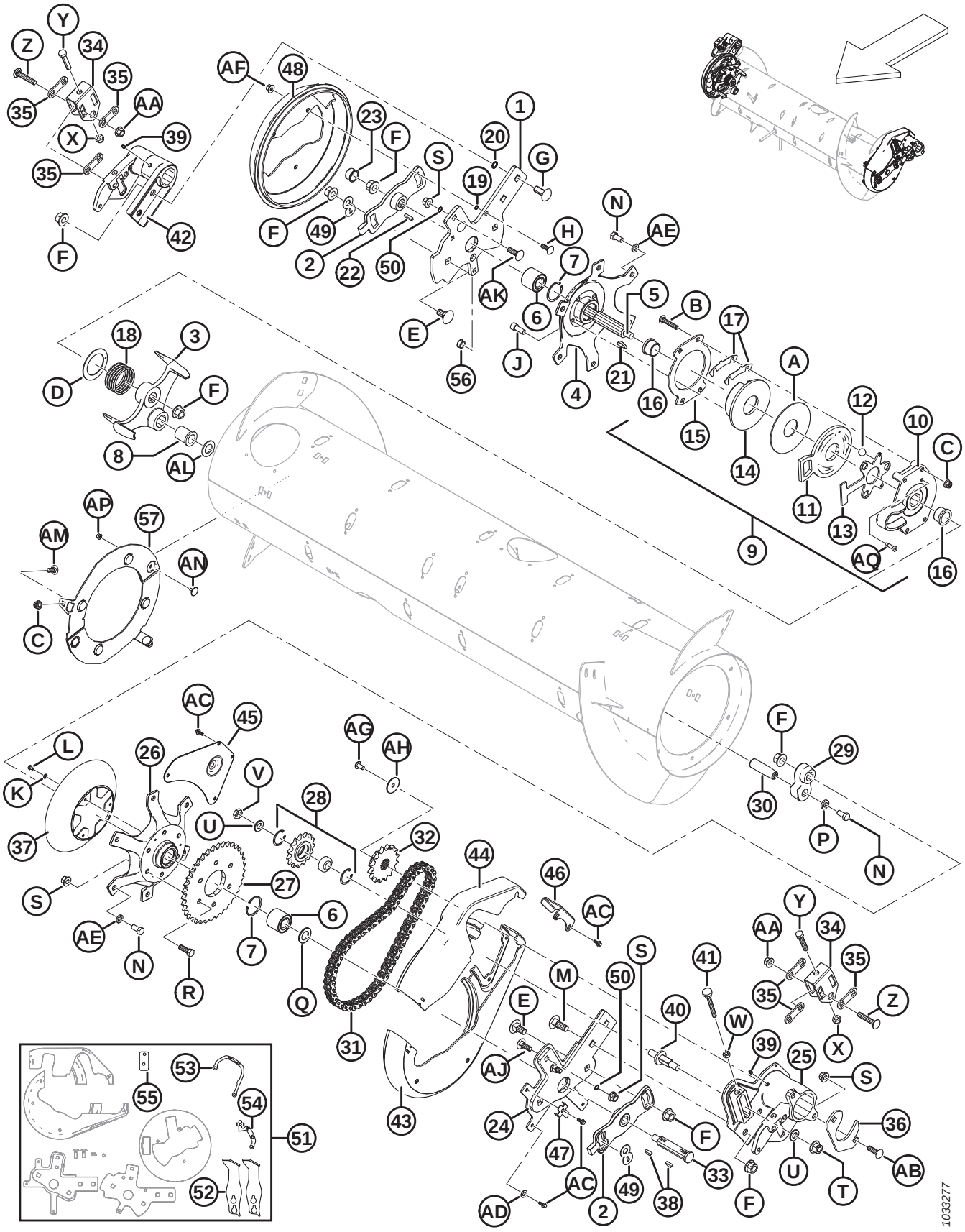

AUGER ASSEMBLY – SERVICE PARTS

Ref	Part Number	Description	Qty	Serial Number
23	276140	CAP – PLASTIC	1	
24	308133	KIT – SERVICE, AUGER ARM, LH (2017 AND PRIOR) [361]	1	–321189
	304931	ARM – LH AUGER SUPPORT WELDT (2018 AND LATER)	1	321190–
25	276258	PIVOT – LH MACHINING, AUGER	1	
26	276141	HUB – MACHINING	1	
27	151793	SPROCKET – RC 60 A 37 T	1	
28	9333	ASSEMBLY – SPROCKET [362]	1	
	9213	BEARING – BALL	1	
	795	RING – RETAINING	2	
29	304521	ARM – FINGER SHAFT CRANK MACH [359]	1	
30	248144	PIN – PIVOT	1	
31	220317	CHAIN – RC-60H, 56 PITCHES RIVETED, ENDLESS	1	
32	151691	SPROCKET – RC 60 B 16 T	1	
33	301441	SHAFT – AUGER	1	
34	301810	BRACKET – ADJUSTER	2	
35	187428	SPACER	6	
36	248388	CLAMP – PLATE	1	
37	276118	SHIELD – CHAIN DRIVE	1	
38	135290	KEY – WOODRUFF (1/4 X 7/8 NOM.)	2	
39	18671	FITTING – LUBE 1/4-28 UNF	2	
40	213420	SPINDLE – THREADED ADJUSTMENT	1	
41	213857	THUMBSCREW – M10 X 80	1	
42	248232	PIVOT – RH MACHINING, AUGER	1	
43	301992	COVER – LH AUGER, LOWER HALF (2018 AND LATER)	1	321190–
	213097	COVER – LH AUGER, LOWER HALF (2017 AND PRIOR)	1	–321189
44	301993	COVER – LH AUGER, UPPER HALF (2018 AND LATER)	1	321190–
	213098	COVER – LH AUGER, UPPER HALF (2017 AND PRIOR)	1	–321189
45	213110	PANEL – ACCESS	1	
46	213112	PLATE – COVER RETAINER	1	
47	213153	BRACKET – CLAMP	1	
48	301994	COVER – AUGER END CAP RH	1	
49	301955	PLATE – LOCKOUT	2	
50	183508	O-RING – HNBR, COLOR GREEN	2	
51	308187	KIT – RTD BUMPER CONVERSION (2017 AND PRIOR) [363]	1	–321189
52	301912	BUMPER – WELDMENT FM100	2	
53	276180	PLATE – INDICATOR RH	1	

361. Kit includes LH auger support arm (MD #304931), LH auger large half cover (MD #301992), LH auger small half cover (MD #301993), two O-rings (MD #183508), and hardware (MD #136291, 136431). If your machine is model year 2017 and prior and kit MD #308187 (bumpers and indicator plates) has been installed, order LH auger support arm (MD #304931). If kit is not installed, order LH auger arm service kit (MD #308133).
362. Includes bearing (MD #9213) and two retaining rings (MD #795).
363. Kit includes two bumpers (MD #301912), LH auger support arm (MD #304931), RH auger support bar (MD #301987), LH auger small half cover (MD #301993), LH auger large half cover (MD #301992), RH auger end cap cover (MD #301994), four O-rings (MD #183508), LH and RH indicator plates (MD #276183 and 276180), spacer plate (MD #308056), and hardware (MD #136291, 136431, and 135900).

AUGER ASSEMBLY – SERVICE PARTS

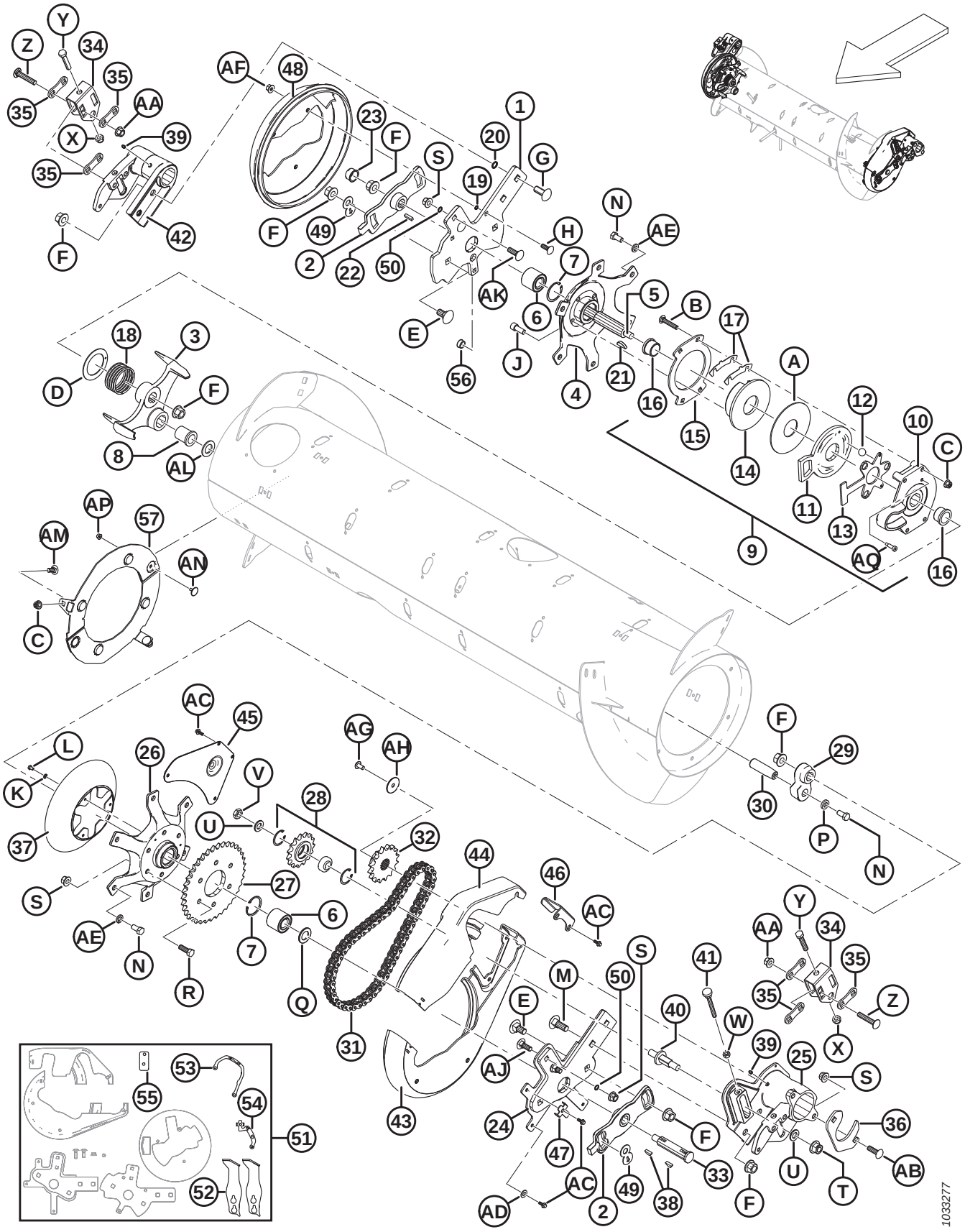

Ref	Part Number	Description	Qty	Serial Number
54	276183	PLATE – INDICATOR LH	1	
55	308056	PLATE – SPACER	1	
56	308859	PLUG – HOLE	1	
57	328500	KIT – REVERSER SHIELD RETROFIT (2020 AND PRIOR) [364]	1	–396189
	335354	KIT – REVERSER SHIELD RETROFIT (2021 AND LATER) [365]	1	396190–
A	213731	WASHER – PLASTIC		
B	252701	BOLT – RHSSN TFL M10 X 1.5 X 60-8.8-A3L		
C	135799	NUT – HEX FLG CTR LOC M10 X 1.5-10-A3L		
D	213733	WASHER – THRUST		
E	252691	BOLT – RHSN M16 X 2 X 35-10.9-A2L		
F	136440	NUT – HEX FLG CTR LOC M16 X 2-10-A3L		
G	252638	BOLT – RHSSN M16 X 2 X 35-8.8-AA3L		
H	184662	BOLT – RHSN TFL M10 X 1.5 X 30-8.8-A3L		
J	50154	SCREW – HEX SOC HD TFL M12 X 1.75 X 30-8.8-A3L		
K	184705	WASHER – FLAT M6-200HV-A2L		
L	136561	BOLT – HEX HD TFL M6 X 1 X 10-8.8-A3L		
M	136757	BOLT – RHSN M16 X 2 X 45-8.8-A2L		
N	50155	BOLT – HEX HD TFL M12 X 1.75 X 25-8.8-A3L		
P	187518	WASHER – FLAT		
Q	123406	WASHER – FLAT		
R	152730	BOLT – HEX HD TFL M12 X 1.75 X 35-10.9-A3L		
S	136431	NUT – HEX FLG CTR LOC M12 X 1.75-10-A3L		
T	136736	NUT – HEX FLG TOP LOCK M16 X 1.5-10-A2L		
U	172558	WASHER – NORDLOCK 5/8 IN.		
V	252288	NUT – HEX THIN FINE M16 X 1.5-8.8-A3L		
W	30505	NUT – HEX M10 X 1.5-10-A3L		
X	184695	NUT – HEX NYLOC M12 X 1.75-8-A3L		
Y	237316	BOLT – HEX HD TFL M12 X 1.75 X 60-8.8-A3L		
Z	252187	BOLT – RHSSN FINE M12 X 1.5 X 65-10.9-A3L		
AA	252188	NUT – HEX FLG CTR LOC FINE M12 X 1.5-10-A3L		
AB	197122	BOLT – RHSSN M12 X 1.75 X 40-8.8-A3L		
AC	252639	BOLT – HEX FLG HD M6 X 1 X 16 X SPCL-8.8-AA2L		
AD	18598	WASHER – SAE FLAT 13/32 I.D. X 13/16 IN. O.D. ZP		
AE	18638	WASHER – REG. LOCK 1/2 IN. NOM. I.D. ZP		
AF	136441	NUT – HEX SER FLG M10 X 1.5-8-A3L		
AG	135157	SCREW – MACHINE		
AH	31465	WASHER – FLAT		
AJ	136291	BOLT – RHSN TFL M12 X 1.75 X 35-8.8-AA1J		

364. Kit includes two magnet assemblies (NSS), bag of five fingers (MD #287802), bolts (MD #135785, 136841), nuts (MD #135799, 152668), and instructions.
365. Kit includes two magnet assemblies (NSS), finger kit (MD #337152), bolts (MD #135785, 136841), nuts (MD #135799, 152668), and instructions.

AUGER ASSEMBLY – SERVICE PARTS

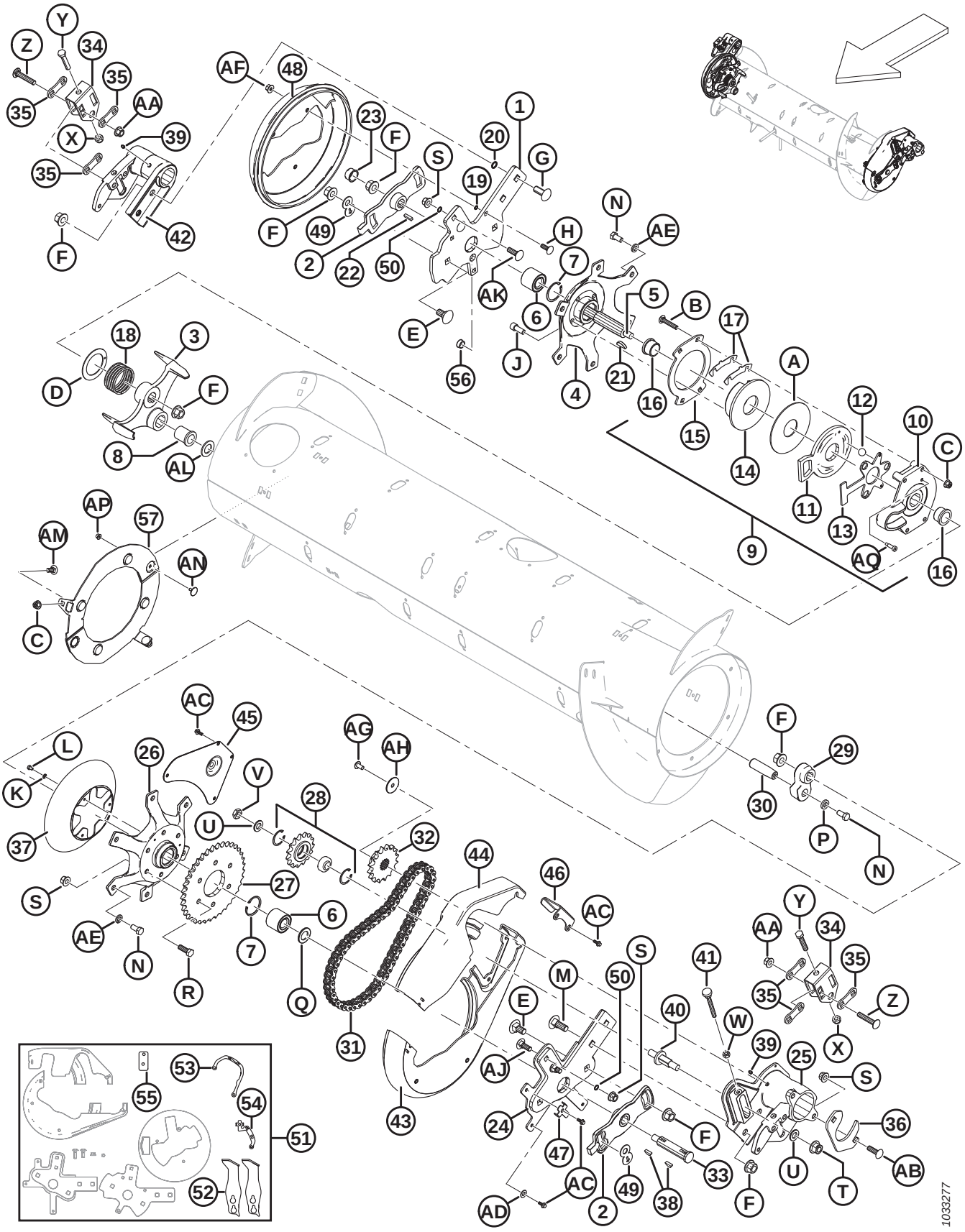

Ref	Part Number	Description	Qty	Serial Number
AK	135900	BOLT – RHSN TFL M12 X 1.75 X 40-8.8-AA1J		
AL	156743	WASHER – FLAT [366]		
AM	135785	BOLT – RHSN M10 X 1.5 X 25-8.8-AA1J		
AN	136841	BOLT – ELEV CSK M6 X 1 X 16 X -8.8		
AP	152668	NUT – HEX FLG CTR LOC M6 X 1-8		
AQ	320237	SCREW – HEX SOC HD SHLDR 8 X 20 X SPCL-12.9-ZINC		

366. Washer (MD #156743) is used if tolerance on bushing (MD #213659) is exceeded. Use washer(s) as required to achieve correct tolerance.

103 Auger Float Linkage

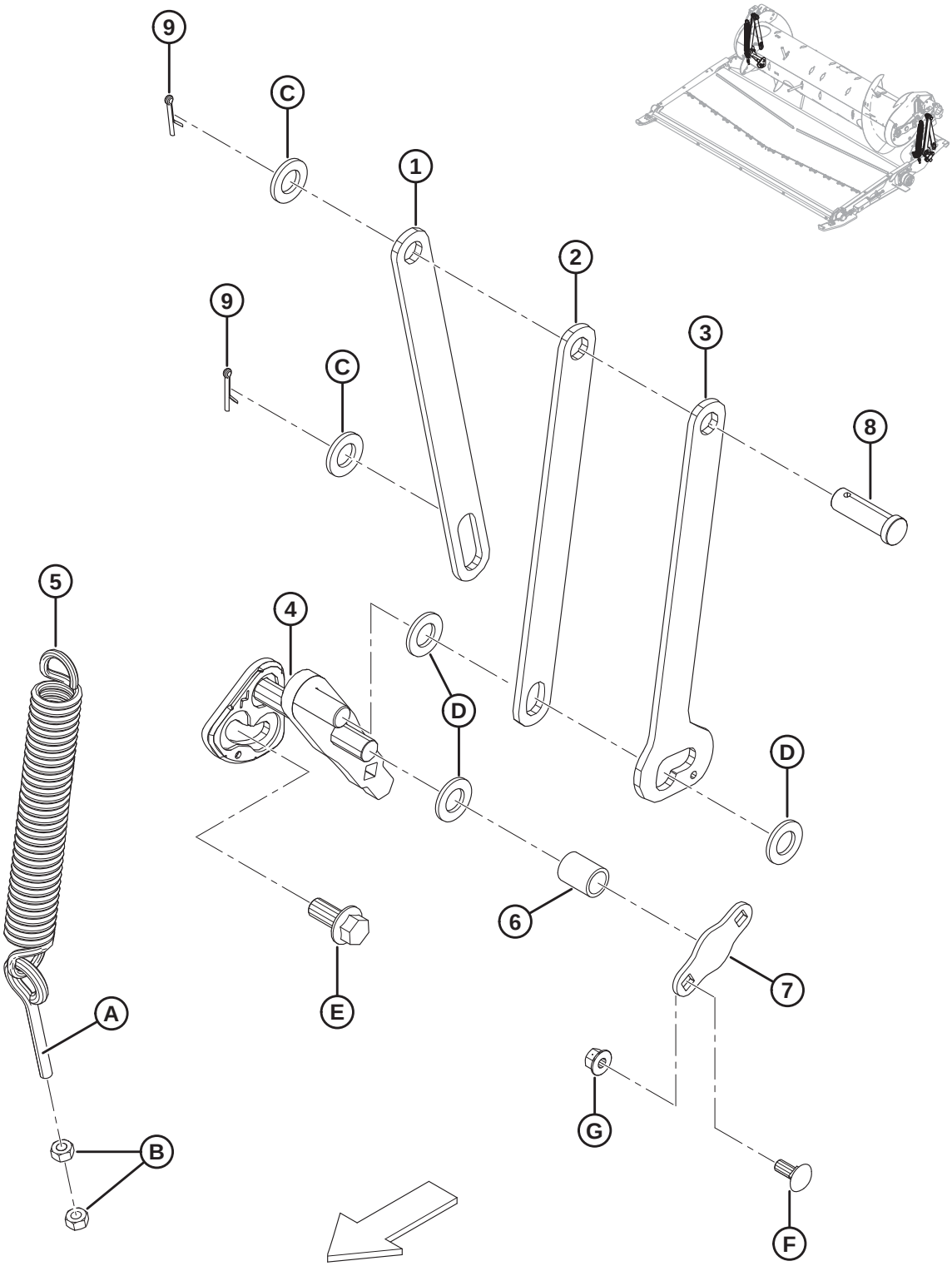

AUGER FLOAT LINKAGE

Ref	Part Number	Description	Qty	Serial Number
1	301805	BAR – AUGER SUPPORT, REAR	2	
2	301806	BAR – AUGER SUPPORT, FRONT	2	
3	301807	BAR – AUGER SUPPORT, DUAL POS	2	
4	276029	ASSY – CRANK WELDT, LH	1	
	276030	ASSY – CRANK WELDT, RH	1	
5	245966	SPRING – EXTENSION	2	
6	248348	TUBE – SPACER	2	
7	248349	PLATE – SECURING	2	
8	18626	PIN – CLEVIS	2	
9	18648	PIN – COTTER 3/16 DIA X 1.25 ZP	4	
A	231448	BOLT – EYE		
B	30505	NUT – HEX M10 X 1.5-10-A3L		
C	112130	WASHER – HARDENED		
D	18601	WASHER – SAE FLAT 13/16 I.D. X 1.5 IN. O.D. ZP		
E	136378	BOLT – HEX FLG HD TFL M16 X 2 X 35-10.9-A3L		
F	135785	BOLT – RHSN M10 X 1.5 X 25-8.8-A3L		
G	135799	NUT – HEX FLG CTR LOC M10 X 1.5-10-A3L		

104 Drives

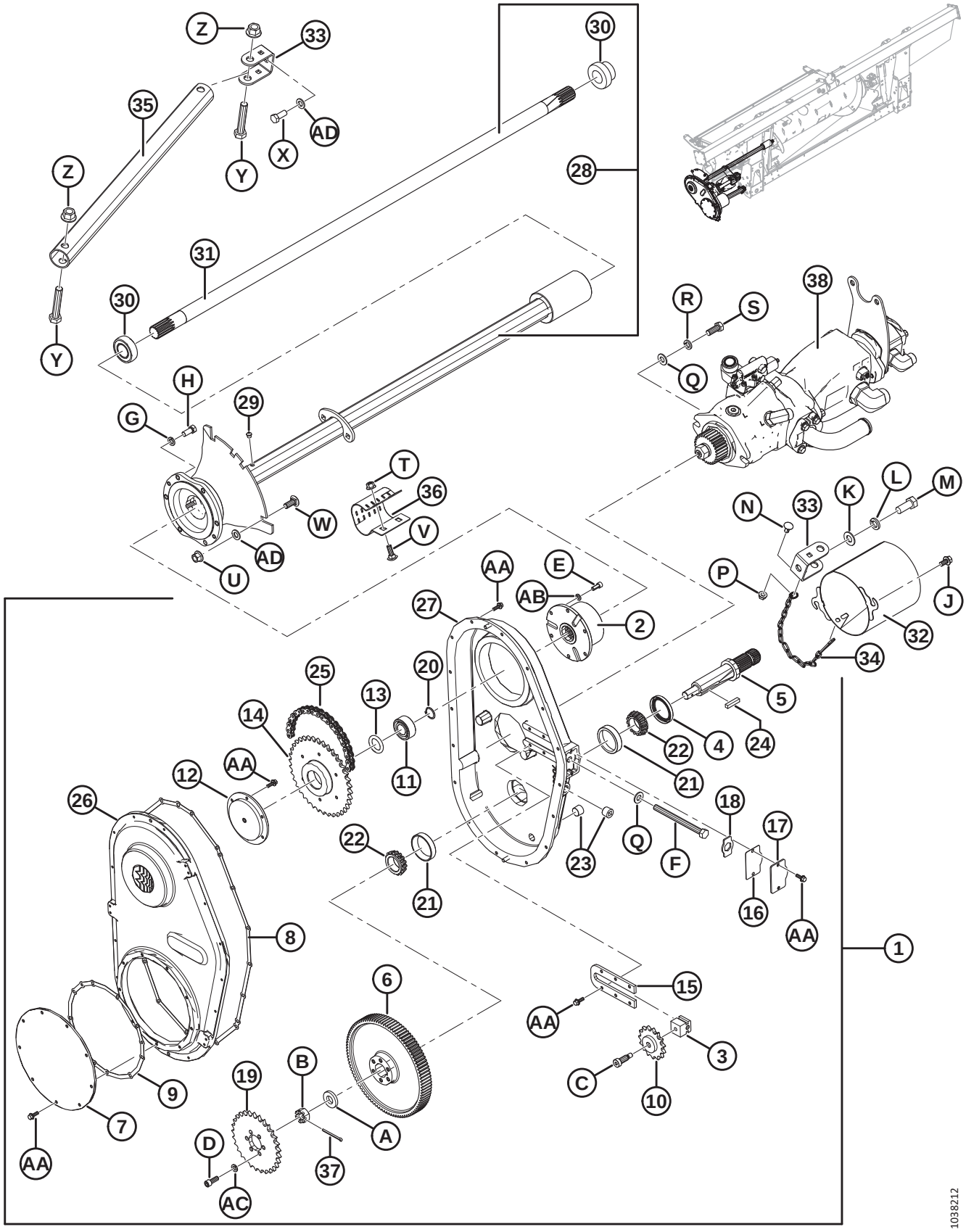

Z
33
30
35
AD
X
Y
Z
28
31
30
Y
38
R
S
Q
H
29
G
T
36
W
V
AD
U
N
33
K
L
M
P
J
AA
E
AB
2
27
32
34
25
20
13
5
14
4
24
22
AA
12
11
21
26
18
17
22
Q
23
F
21
16
AA
8
1
6
15
AA
3
B
19
C
10
9
7
A
D
37
AA
AC
1038212

Ref	Part Number	Description	Qty	Serial Number
1	276149	DRIVE – GEARBOX (CNH) [367]	1	
	276812	DRIVE – GEARBOX (AGCO) [367]	1	
	276811	DRIVE – GEARBOX (CLAAS) [367]	1	
	245620	DRIVE – GEARBOX (JOHN DEERE) [367]	1	
2	187466	COMPACT AUTOMATIC CLUTCH	1	
3	187476	BLOCK – IDLER	1	
4	187477	SEAL	1	
5	187478	SHAFT	1	
6	187480	GEAR – 97 TEETH (CNH/JOHN DEERE)	1	
	276353	GEAR – 89 TEETH (AGCO/CLAAS)	1	
7	187482	COVER – SPROCKET	1	
8	187697	GASKET – HOUSING	1	
9	187698	GASKET – SPROCKET COVER	1	
10	187484	SPROCKET IDLER 50C15	1	
11	187485	BEARING – BALL DBL ROW 3205	1	
12	187486	SUPPORT – PINION	1	
13	187487	SHIM – KIT	1	
14	187492	SPROCKET 50B38	1	
15	276679	PLATE – TENSIONER	1	
16	187696	GASKET – ADJUSTMENT COVER	1	
17	187494	COVER – ADJUSTING	1	
18	187495	RETAINER	1	
19	231389	SPROCKET – 50A29 (CNH/AGCO)	1	
	187524	KIT – SPROCKET, 22 TOOTH (CLAAS) [368]	1	
	248407	SPROCKET – 50A37 (JOHN DEERE)	1	
20	18898	RING – EXT RETAINING	1	
21	30701	BEARING – CUP	2	
22	30702	BEARING – CONE	2	
23	30203	PLUG – MAGNETIC PIPE	3	
24	26846	KEY	1	
25	231534	ROLLER CHAIN – RC 50 (78 PITCHES ENDLESS) CNH	1	
	156037	ROLLER CHAIN – RC 50 (74 PITCHES ENDLESS) AGCO/CLAAS	1	
	248408	ROLLER CHAIN – RC 50 (80 PITCHES ENDLESS) JD	1	
26	187481	COVER – GEARBOX	1	
27	287914	HOUSING – GEARBOX	1	
28	301663	OUTPUT SHAFT ASSEMBLY [369]	1	
29	21425	VALVE – RELIEF	1	
30	21363	BEARING – SPH OD AND COLLAR	2	
31	279689	SHAFT – OUTPUT	1	
32	133421	GUARD – WELDMENT	1	
33	187520	ANCHOR – STRUT	2	

367. Includes items #2–27 and hardware.
368. Includes sprocket and installation instructions.
369. Includes relief valve (MD #21425), two bearings (MD #21363), and shaft (MD #279689).

DRIVES

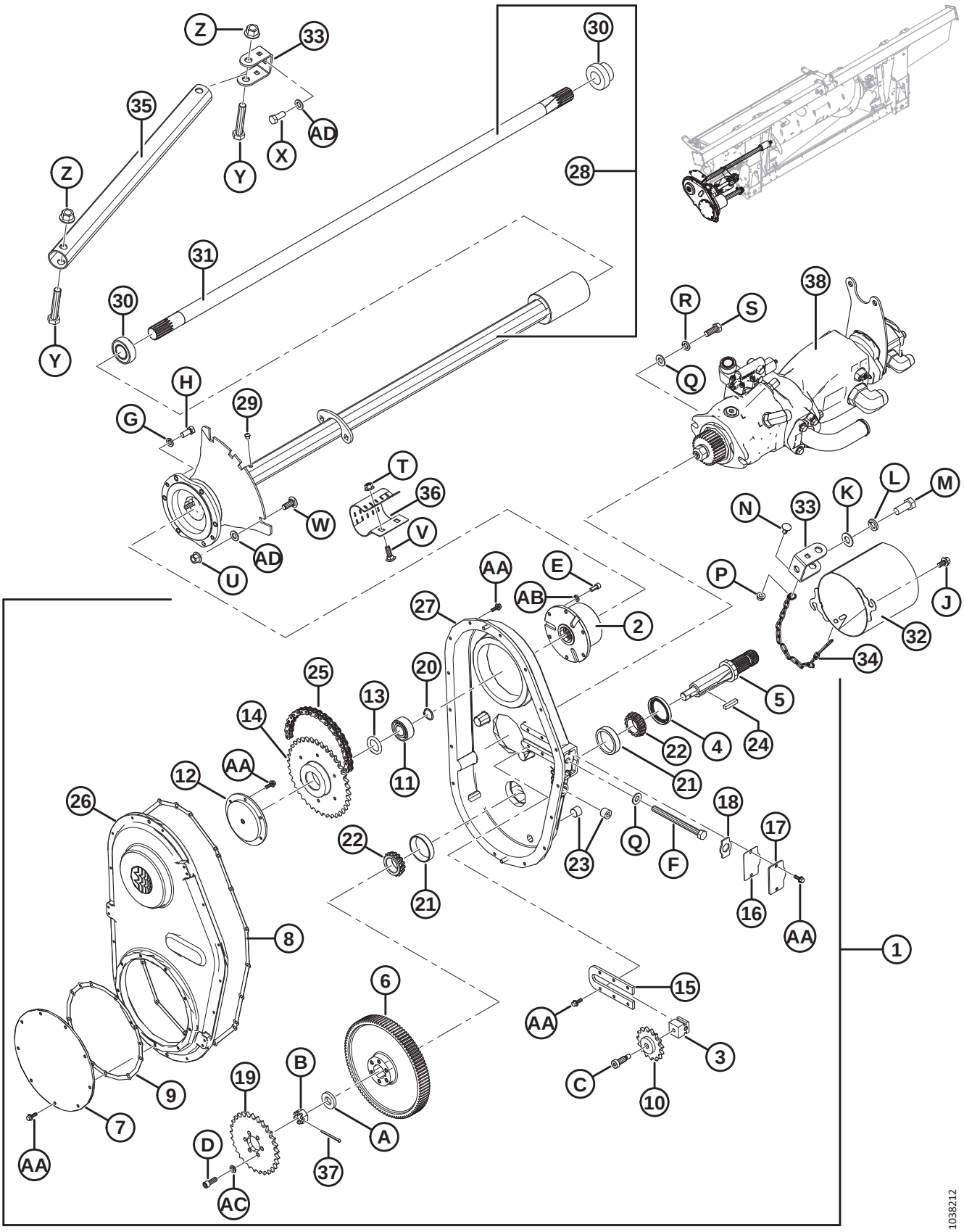

Z
33
35
AD
X
Y
Z
Y
30
28
31
30
38
R
S
Q
H
29
G
T
36
W
V
AD
U
N
33
K
L
M
P
J
32
34
AA
E
AB
2
27
20
25
13
14
5
4
24
22
21
AA
12
11
26
18
17
22
Q
F
23
21
16
AA
8
1
6
15
AA
3
C
10
B
19
9
7
A
D
37
AA
AC
1038212

Ref	Part Number	Description	Qty	Serial Number
34	279081	CHAIN	1	
35	301902	TUBE – STRUT	1	
36	248850	CLAMP	1	
37	135358	PIN – COTTER, 5/32 DIA X 2.0 ZP	1	
38	REF	PUMP ASSEMBLY **– BOSCH/REXROTH** [370]		
	REF	**PUMP ASSEMBLY – PARKER HANNIFIN** [371]		
	REF	**PUMP ASSEMBLY – EATON** [372]		
A	187483	WASHER		
B	5512	NUT – HEX SLOTTED 3/4		
C	135694	BOLT – SHOULDER SOCKET HD 1/2 X 1.0 LG		
D	135381	BOLT – SOCKET HD 3/8 X 1.0 LG		
E	135748	BOLT – SOCKET HD 5/16 X 0.75 LG		
F	276680	BOLT – HEX HD TFL 1/2-13 X 5.5 GR 5 BO		
G	18652	WASHER – REG. LOCK 7/16 IN. NOM. I.D. ZP		
H	21522	BOLT – HH 7/16 NC X 1.0 LG GR 5 ZP		
J	21821	BOLT – HH FLG (SER FACE) 3/8 NC X 0.75 GR 5 ZP		
K	18600	WASHER – SAE FLAT 21/32 I.D. X 1-5/16 IN. O.D. ZP		
L	18639	WASHER – REG. LOCK 5/8 IN. NOM. I.D. ZP		
M	21594	BOLT – HEX HD 0.625-11 UNC X 1.50		
N	21472	BOLT – RHSN 3/8-16 X .75 GR 5		
P	30228	NUT – FLANGE DT SMTH FACE 0.375-16 UNC		
Q	18599	WASHER – SAE FLAT 17/32 I.D. X 1-1/16 IN. O.D. ZP		
R	18638	WASHER – REG. LOCK 1/2 IN. NOM. I.D. ZP		
S	21491	BOLT – HH 1/2 NC X 1.25 LG GR 5 ZP		
T	135799	NUT – HEX FLG CTR LOC M10 X 1.5-10-A3L		
U	136431	NUT – HEX FLG CTR LOC M12 X 1.75-10-A3L		
V	184662	BOLT – RHSN TFL M10 X 1.5 X 30-8.8-A3L		
W	184667	BOLT – RHSN M12 X 1.75 X 30-8.8-AA1J		
X	136137	BOLT – HEX HD TFL M16 X 2 X 35-8.8-AA1J		
Y	136455	BOLT – HEX HD M16 X 2 X 85-8.8-A3L		
Z	136440	NUT – HEX FLG CTR LOC M16 X 2-10-A3L		
AA	21456	BOLT – HH FLG (SER FACE) 1/4 NC X 0.75 GR 5 ZP		
AB	18636	WASHER – REG. LOCK 5/16 IN. NOM. I.D. ZP		
AC	18637	WASHER – REG. LOCK 3/8 IN. NOM. I.D. ZP		
AD	184717	WASHER – FLAT REG M16-200HV-AA1J		

370. To verify which pump assembly is installed, refer to Section *105 Pump Assemblies – Identifying Pump, page 321*. For Bosch/Rexroth service parts, refer to Section *106 Pump Assembly – Bosch/Rexroth, page 323*.
371. To verify which pump assembly is installed, refer to Section *105 Pump Assemblies – Identifying Pump, page 321*. For Parker Hannifin service parts, refer to Section *107 Pump Assembly – Parker Hannifin (2022 Only), page 327*.
372. To verify which pump assembly is installed, refer to Section *105 Pump Assemblies – Identifying Pump, page 321*. For Eaton service parts, refer to Section *108 Pump Assembly – Eaton (2022 Only), page 331*.

105 Pump Assemblies – Identifying Pump

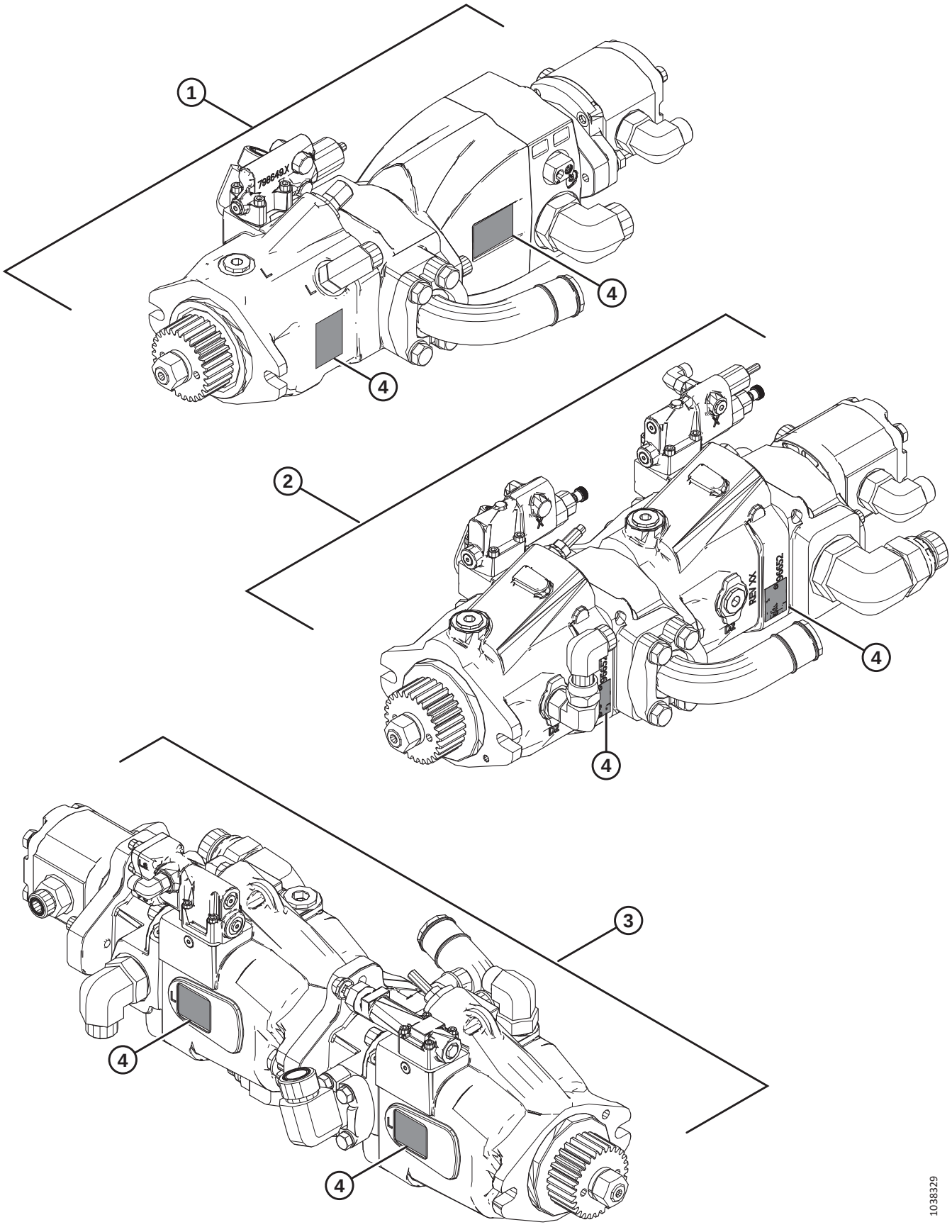

NOTE:

The Bosch/Rexroth pump assembly is installed on model year 2021 and prior, and some model year 2022 float modules. Many model year 2022 float modules have either a Parker or Eaton pump assembly installed. Refer to the parts table and illustration to identify which pump assembly is installed.

- **Bosch/Rexroth (1)** – Color: Black; refer to the illustration for serial plate locations. For service parts, refer to Section *106 Pump Assembly – Bosch/Rexroth, page 323*.
- **Parker Hannifin (2)** – Color: Black; refer to the illustration for serial plate locations. For service parts, refer to Section *107 Pump Assembly – Parker Hannifin (2022 Only), page 327*.
- **Eaton (3)** – Color: Grey; refer to the illustration for serial plate locations. For service parts, refer to Section *108 Pump Assembly – Eaton (2022 Only), page 331*.

.

Ref	Part Number	Description	Qty	Serial Number
1	**NSS**	**PUMP ASSEMBLY – BOSCH/REXROTH**		
2	**NSS**	**PUMP ASSEMBLY – PARKER HANNIFIN**		
3	**NSS**	**PUMP ASSEMBLY – EATON**		
4	**REF**	**SERIAL PLATE**		

106 Pump Assembly – Bosch/Rexroth

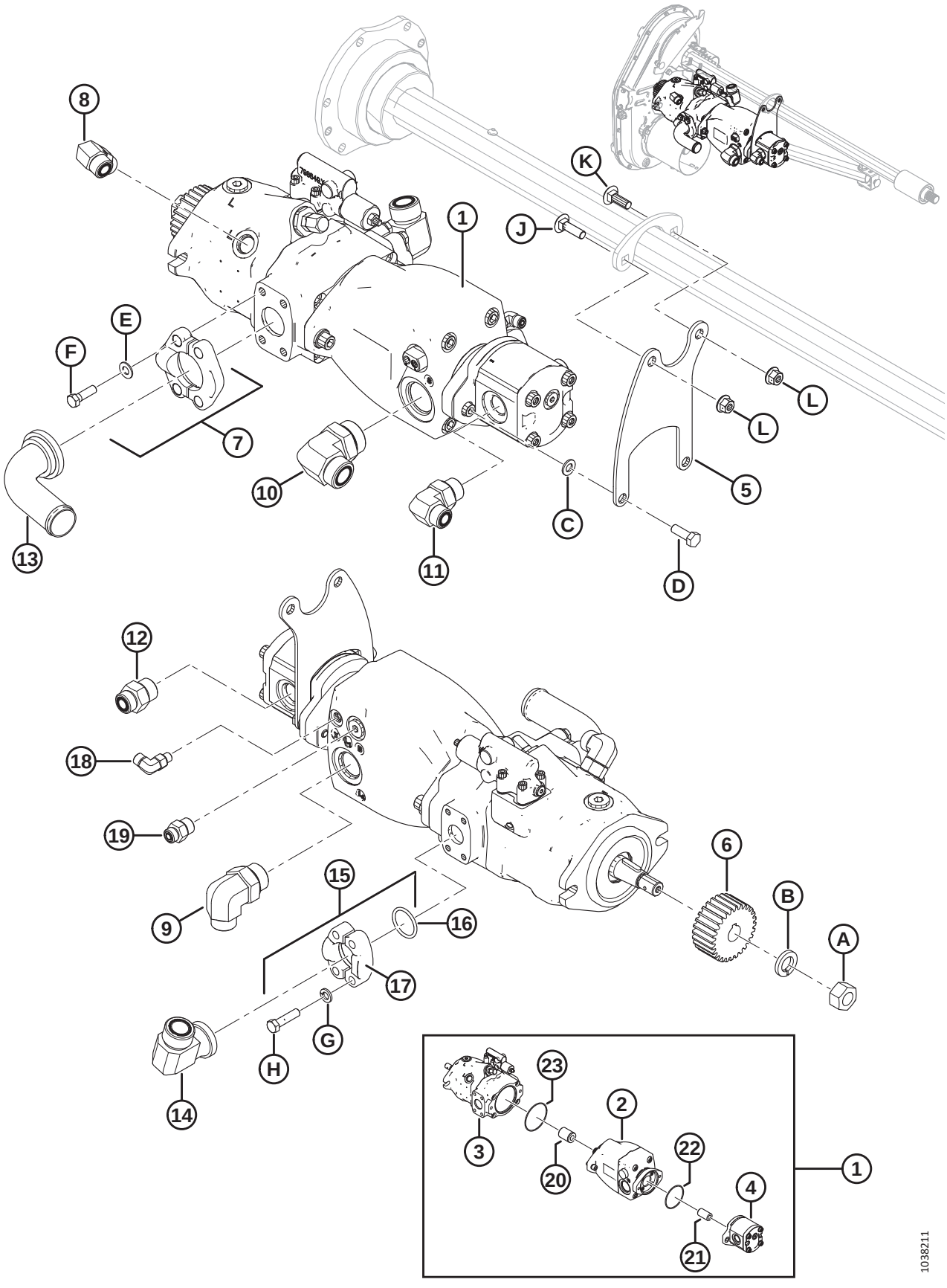

NOTE:

Some float modules may have been shipped with Bosch/Rexroth gear pumps, which are not sold separately. To replace complete gear pump, order 16 cc or 19 cc Casappa gear pump and seal kit listed in parts list. To service seal kit on Bosch/Rexroth gear pumps, order seal kit MD #187967. For more information regarding gear pumps, refer to your header technical manual.

Ref	Part Number	Description	Qty	Serial Number
1	NSS	PUMP ASSEMBLY [373]	1	
2	311466	PUMP – PISTON, SIDE DRAPER	1	
	335447	VALVE – PUMP CONTROL C/W CAP [374]		
	335446	CAP – VINYL		
3	248089	PUMP – PISTON, KNIFE DRIVE	1	
	294890	SEAL KIT – KNIFE DRIVE PISTON PUMP C/W INSTRUCTION		
	326217	CAP – DISP ADJUST C/W O-RING		
	326218	KEY – PARALLEL, 1/4 IN. ROUND ENDS		
4	187252	PUMP – GEAR, 16 CC, FEED DRAPER (CNH/CLAAS)	1	
	295998	PUMP – GEAR, 19 CC, FEED DRAPER (JD/AGCO)	1	
	187918	SEAL KIT – GEAR PUMP (CASAPPA) [375]		
	REF	SEAL KIT – GEAR PUMP (BOSCH/REXROTH) [376]		
5	295242	BRACKET – PUMP TAIL SUPPORT	1	
6	276859	GEAR – PINION 28 TEETH 2.5 MODULE (CNH/JD)	1	
	276352	GEAR – PINION 36 TEETH 2.5 MODULE (CLAAS/AGCO)	1	
7	136246	KIT – SPLIT FLANGE, 1.5 IN. CD 61 [377]	1	
	135400	O-RING – 1.859 IN. I.D. X 0.139 IN. WALL		
8	136089	FITTING – ELBOW 90° HYD	1	
	44210	O-RING – #10 ORB		
	135867	O-RING – #10 ORFS		
9	135901	FITTING – ELBOW 90° HYD	1	
	50220	O-RING – #20 ORB		
	135868	O-RING – #12 ORFS		
10	136766	FITTING – ELBOW 90° HYD 20-16	1	
	50220	O-RING – #20 ORB		
	135554	O-RING – #16 ORFS		
11	136347	FITTING – ELBOW 90° HYD	1	
	30971	O-RING – #12 ORB		
	135867	O-RING – #10 ORFS		
12	135786	FITTING – ADAPTER	1	
	30971	O-RING – #12 ORB		
	135867	O-RING – #10 ORFS		
13	294833	FITTING – HYD ELBOW CODE 61	1	

373. Not serviced as a complete assembly. To service individual components, refer to items #2–4 and 20–23.
374. Includes vinyl cap (MD #335446).
375. Used in gear pumps (MD #187252 and 295998).
376. To service seal kit on Bosch/Rexroth gear pumps (NSS), order seal kit (MD #187967).
377. Includes two half-split flanges (MD #136106), O-ring (MD #135400), four bolts (MD #252641), and four flat washers (MD #184714).

PUMP ASSEMBLY – BOSCH/REXROTH

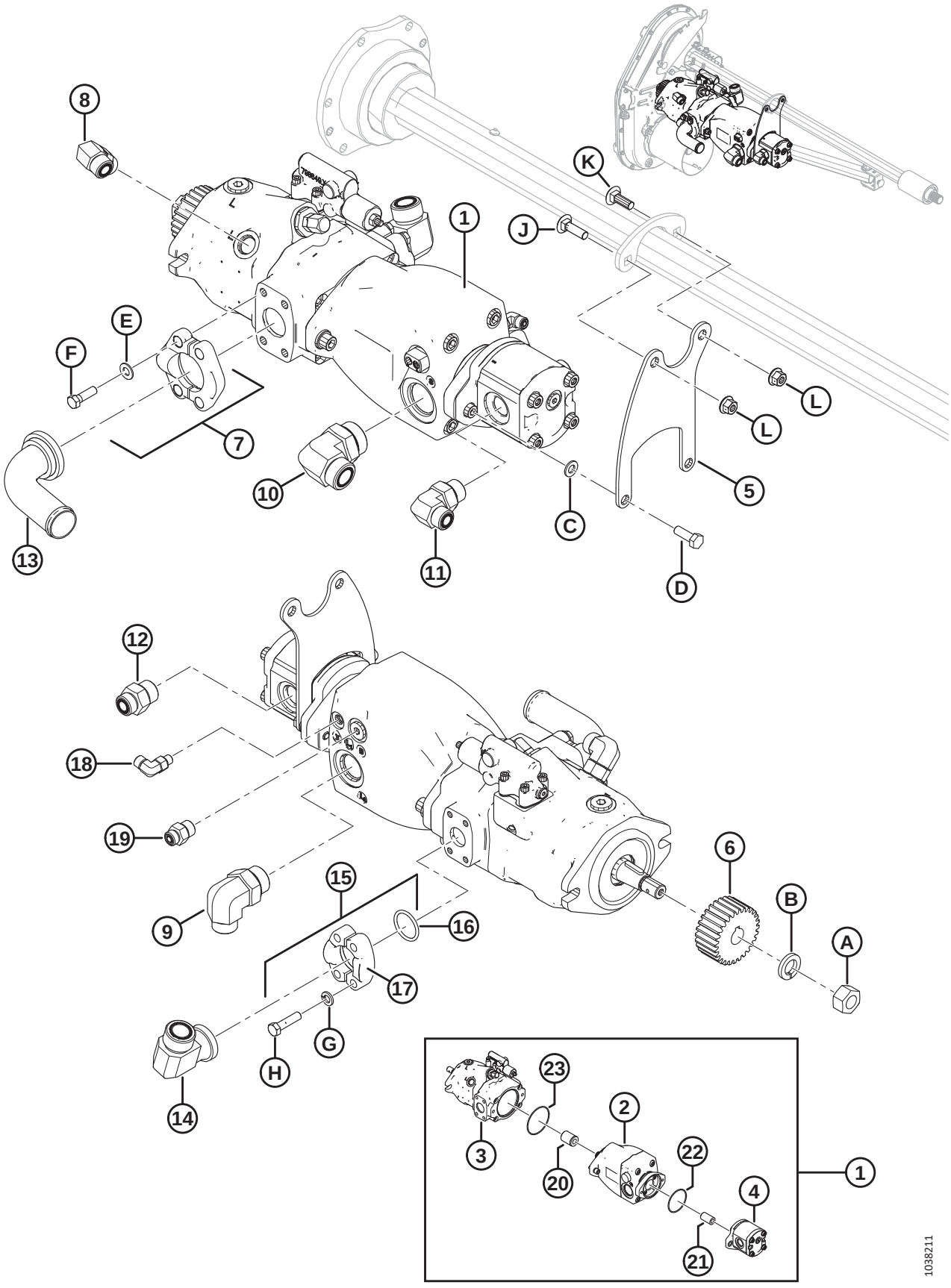

Ref	Part Number	Description	Qty	Serial Number
14	252208	FITTING – 90° #16 FLANGE X #16 MALE ORFS	1	
	112868	O-RING – #16 FLANGE		
	135554	O-RING – #16 ORFS		
15	112866	KIT – SPLIT FLANGE, 1 INCH CD 61 [378]	1	
16	112868	O-RING – 1.296 IN. I.D. X 0.139 IN. WALL	1	
17	194033	FLANGE – HALF SPLIT, 1 INCH, CODE 61	2	
18	136447	FITTING – ELBOW 90° HYD	1	
	50223	O-RING – #4 ORB		
	135957	O-RING – #4 ORFS		
19	191705	FITTING – ADAPTER 6 MORFS X 8 MORB	1	
	44209	O-RING – #8 ORB		
	135865	O-RING – #6 ORFS		
20	295139	COUPLER – SPLINED, 13-13T	1	
21	295140	COUPLER – SPLINED, 20-11T	1	
22	136024	O-RING (3 X 85) [379]	1	
23	294832	O-RING (3 X 104)	1	
A	18720	NUT – HEX 3/4-16 UNF GR 5 ZN PL		
B	18640	WASHER – REG. LOCK 3/4 IN. NOM. I.D. ZP		
C	184711	WASHER – FLAT REG. M10-200HV-A3L		
D	184661	BOLT – HEX HD TFL M10 X 1.5 X 30-8.8-A3L		
E	184714	WASHER – FLAT REG M12-300HV		
F	252642	BOLT – HH 1/2-13 X 1.75-GR8-AA3L		
G	30191	WASHER – HARDENED ASTM F436 3/8		
H	252640	BOLT – HH 3/8-16 X 1.25-GR8-AA3L		
J	**135691**	**BOLT – RHSN TFL M10 X 1.5 X 35-8.8-AA1J**		
K	**184662**	**BOLT – RHSN TFL M10 X 1.5 X 30-8.8-AA1J**		
L	**135799**	**NUT – HEX FLG CTR LOC M10 X 1.5-10**		

378. Includes two half-split flanges (MD #194033), O-ring (MD #112868), four bolts (MD #252640), and four flat washers (MD #30191).
379. O-ring (MD #136024) is included in the Gear Pump Conversion kits; refer to Section *153 Gear Pump Conversion Kits, page 447*. When replacing the gear pump separately, be sure to order O-ring (MD #136024) if the O-ring is worn or damaged.

107 Pump Assembly – Parker Hannifin (2022 Only)

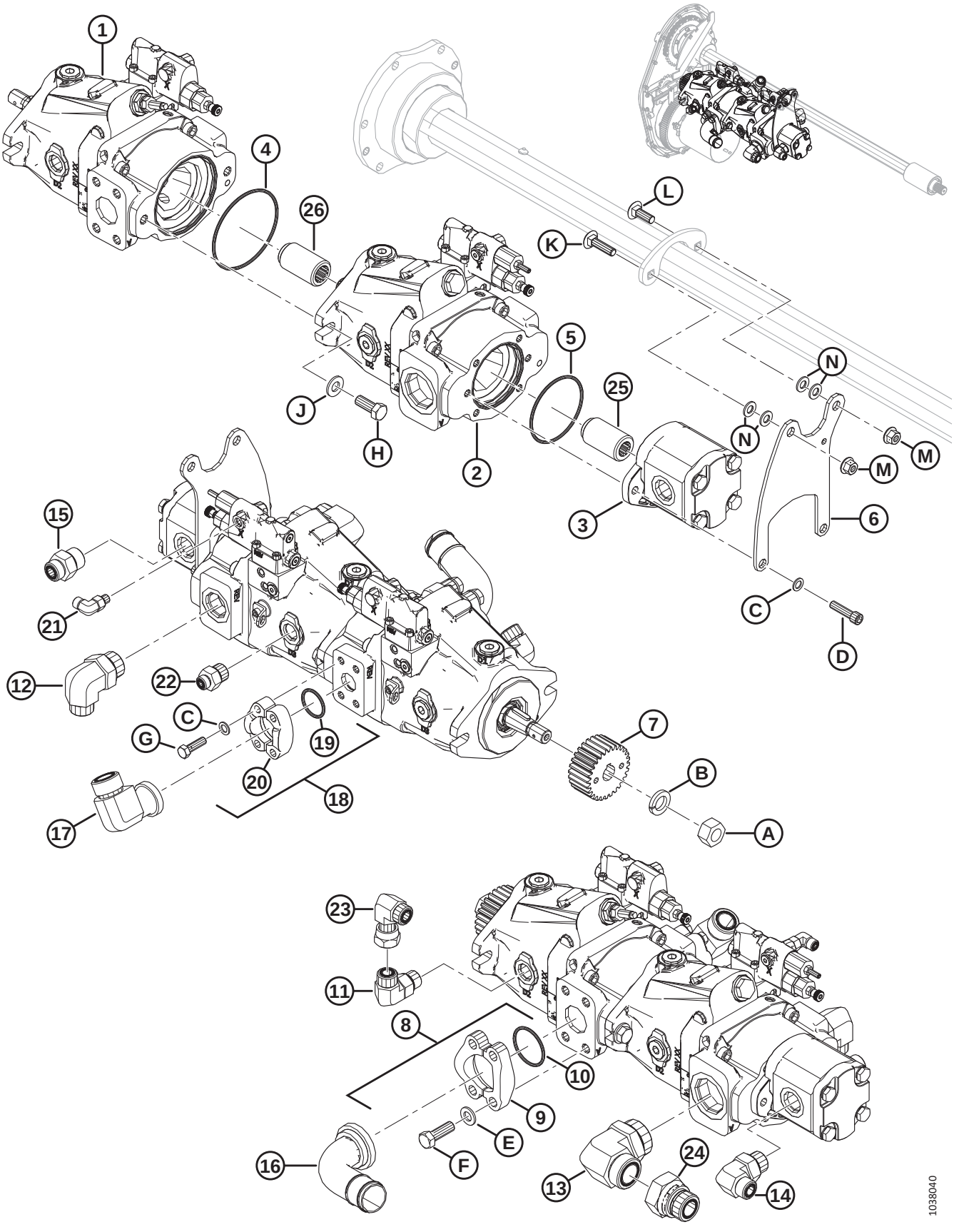

PUMP ASSEMBLY – PARKER HANNIFIN (2022 ONLY)

NOTE:

Some float modules may have been shipped with Parker gear pumps, which are not sold separately. To replace complete gear pump, order 16 cc or 19 cc Casappa gear pump and seal kit listed in parts list. To service seal kit on Parker gear pumps, order seal kit MD #326295. For more information regarding gear pumps, refer to your header technical manual.

Ref	Part Number	Description	Qty	Serial Number
1	NSS	PUMP – PISTON, KNIFE DRIVE (PARKER) [380]	1	
	326218	KEY – PARALLEL, 1/4" ROUND ENDS		
	326292	KIT – SEAL, PISTON PUMP (PARKER)		
2	NSS	PUMP – PISTON, SIDE DRAPER [381]	1	
	326292	KIT – SEAL, PISTON PUMP (PARKER)		
3	187252	PUMP – GEAR, 16 CC, FEED DRAPER (CNH/CLAAS)	1	
	295998	PUMP – GEAR, 19 CC, FEED DRAPER (JD/AGCO)	1	
	187918	SEAL KIT – GEAR PUMP [382]		
	REF	SEAL KIT – GEAR PUMP [383]		
4	320415	O-RING – 3.5 X 104.4	1	
5	320414	O-RING – 3.5 X 85.3	1	
6	326286	BRACKET – PUMP TAIL SUPPORT	1	
7	276859	GEAR – PINION 28 TEETH 2.5 MODULE (CNH/JD)	1	
	276352	GEAR – PINION 36 TEETH 2.5 MODULE (CLAAS/AGCO)	1	
8	136246	KIT – SPLIT FLANGE, 1.5 IN. CD 61 [384]	1	
9	136106	FLANGE – HALF SPLIT, 1.5 IN.	2	
10	135400	O-RING – 1.859 IN. I.D. X 0.139 IN. WALL	1	
11	136089	FITTING – ELBOW 90° HYD	1	
	44210	O-RING – #10 ORB		
	135867	O-RING – #10 ORFS		
12	135901	FITTING – ELBOW 90° HYD	1	
	50220	O-RING – #20 ORB		
	135868	O-RING – #12 ORFS		
13	320116	FITTING – ELBOW 90° HYD	1	
14	136347	FITTING – ELBOW 90° HYD	1	
	30971	O-RING – #12 ORB		
	135867	O-RING – #10 ORFS		
15	135786	FITTING – ADAPTER	1	
	30971	O-RING – #12 ORB		
	135867	O-RING – #10 ORFS		
16	294833	FITTING – HYD ELBOW CODE 61	1	

380. If replacing a Parker knife drive pump, order knife drive pump service kit (MD #326299). Refer to Section *109 Knife Drive Pump Service Kit, page 335*.
381. If replacing a Parker draper drive pump, order draper drive pump service kit (MD #326300). Refer to Section *110 Draper Drive Pump Service Kit, page 337*.
382. Used in gear pumps (MD #187252 and 295998).
383. To service seal kit on Parker gear pumps (NSS), order seal kit (MD #326295).
384. Includes two half-split flanges (MD #136106), O-ring (MD #135400), four bolts (MD #252641), and four flat washers (MD #184714).

PUMP ASSEMBLY – PARKER HANNIFIN (2022 ONLY)

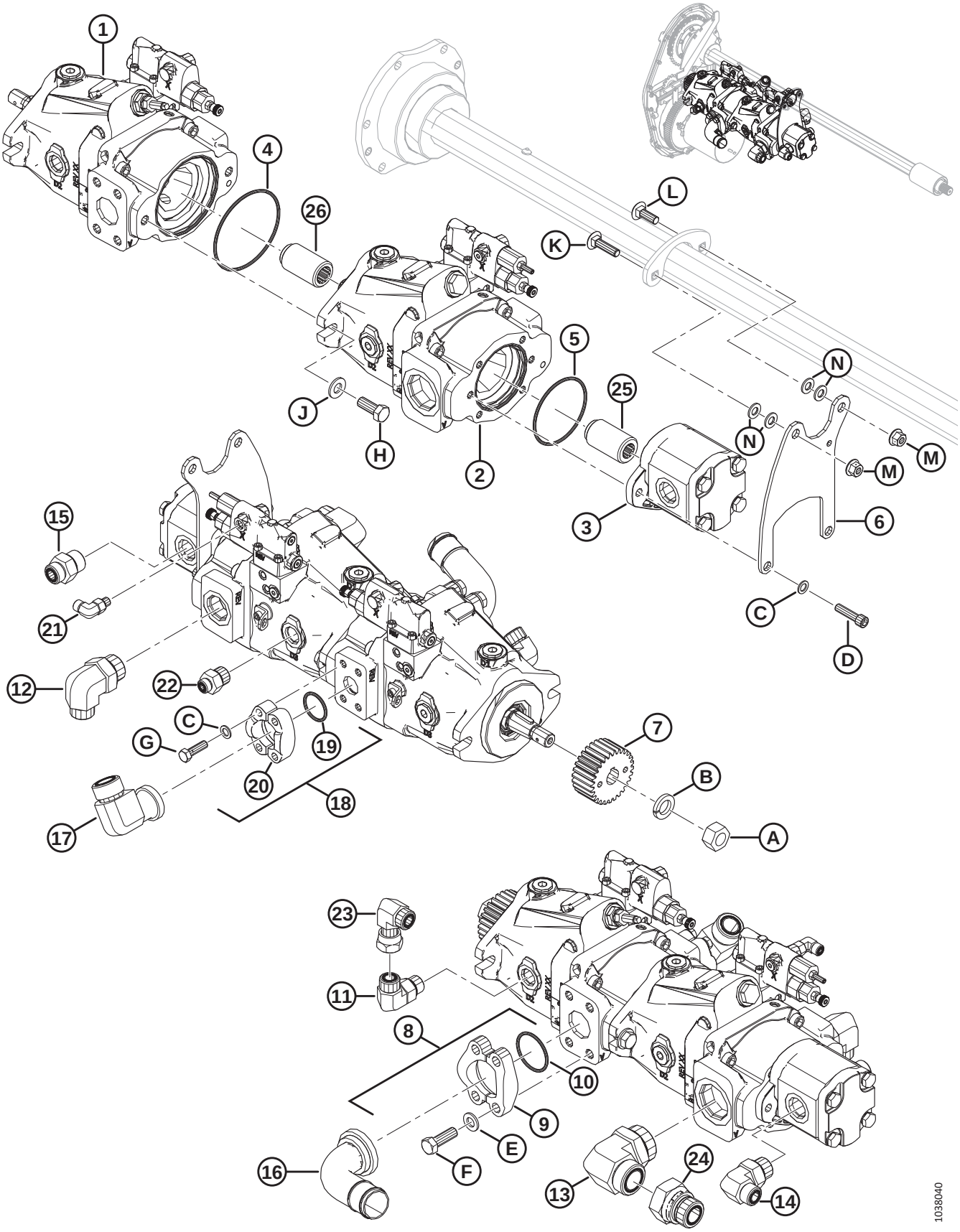

Ref	Part Number	Description	Qty	Serial Number
17	252208	FITTING – 90° #16 FLANGE X #16 MALE ORFS	1	
	112868	O-RING – #16 FLANGE		
	135554	O-RING – #16 ORFS		
18	112866	KIT – SPLIT FLANGE, 1 INCH CD 61 [385]	1	
19	112868	O-RING – 1.296 IN. I.D. X 0.139 IN. WALL	1	
20	194033	FLANGE – HALF SPLIT, 1 INCH, CODE 61	2	
21	136447	FITTING – ELBOW 90° HYD	1	
	50223	O-RING – #4 ORB		
	135957	O-RING – #4 ORFS		
22	184462	FITTING – ADAPTER HYD	1	
	44210	O-RING – Ø2.46 X Ø19.18		
	135865	O-RING – Ø1.78 X Ø9.25		
23	136846	FITTING – ELBOW 90° HYD	1	
24	252076	FITTING – REDUCER HYD	1	
	135554	O-RING – #16 ORFS		
25	326294	COUPLER – SPLINED, 19-11T		
26	326293	COUPLER – SPLINED, 19-13T		
A	18720	NUT – HEX 3/4-16 UNF GR 5 ZN PL		
B	18640	WASHER – REG. LOCK 3/4 IN. NOM. I.D. ZP		
C	30191	WASHER – HARDENED ASTM F436 3/8		
D	115672	SCREW – HEX SOC HD 3/8-16 X 1.5		
E	184714	WASHER – FLAT REG M12-300HV		
F	252641	BOLT – HH 1/2-13 X 1.5-GR8-AA3L		
G	252640	BOLT – HH 3/8-16 X 1.25-GR8-AA3L		
H	21491	BOLT – HEX HD 1/2-13 X 1.25 GR5-AA1J		
J	135369	WASHER – HARDENED ASTM F436 1/2		
K	152732	BOLT – RHSN M10 X 1.5 X 40-8.8-AA1J		
L	184662	BOLT – RHSN TFL M10 X 1.5 X 30-8.8-AA1J		
M	135799	NUT – HEX FLG CTR LOC M10 X 1.5-10		
N	184711	WASHER – FLAT REG M10-200HV-AA1J		

385. Includes two half-split flanges (MD #194033), O-ring (MD #112868), four bolts (MD #252640), and four flat washers (MD #30191).

108 Pump Assembly – Eaton (2022 Only)

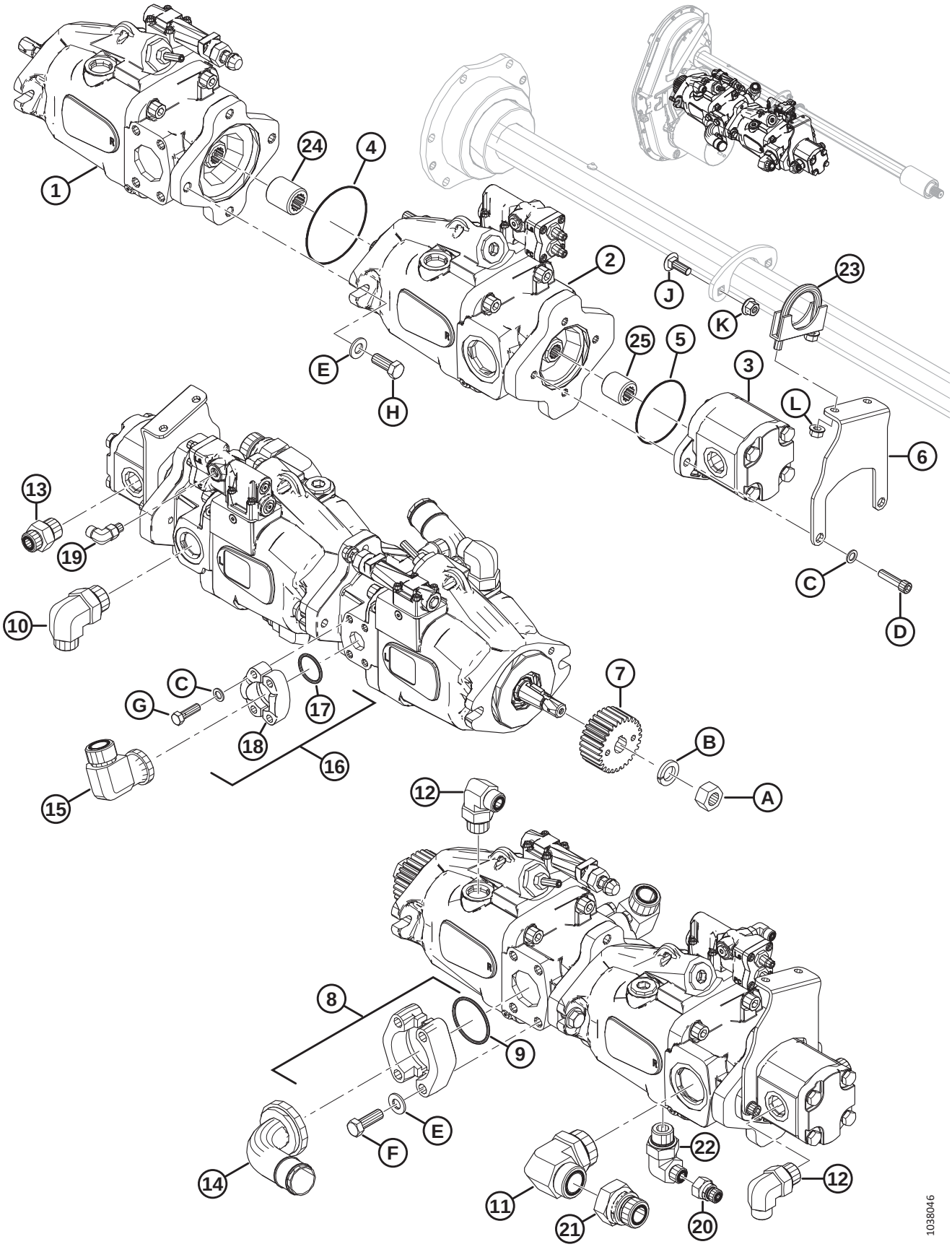

PUMP ASSEMBLY – EATON (2022 ONLY)

NOTE:

Some float modules may have been shipped with Eaton gear pumps, which are not sold separately. To replace complete gear pump, order 16 cc or 19 cc Casappa gear pump and seal kit listed in parts list. To service seal kit on Eaton gear pumps, order seal kit MD #326295. For more information regarding gear pumps, refer to your header technical manual.

Ref	Part Number	Description	Qty	Serial Number
1	NSS	PUMP – PISTON, KNIFE DRIVE [386]	1	
	180094	KEY – 1/4"SQ X 13/16" LG		
	326296	KIT – SEAL, PISTON PUMP (EATON)		
2	NSS	PUMP – PISTON, SIDE DRAPER [387]	1	
	326296	KIT – SEAL, PISTON PUMP (EATON)		
3	187252	PUMP – GEAR, 16 CC, FEED DRAPER (CNH/CLAAS)	1	
	295998	PUMP – GEAR, 19 CC, FEED DRAPER (JD/AGCO)	1	
	187918	SEAL KIT – GEAR PUMP (CASAPPA) [388]		
	REF	SEAL KIT – GEAR PUMP (EATON) [389]		
4	320417	O-RING – 1.8 X 101.3	1	
5	320438	O-RING – 1.8 X 82.3	1	
6	326237	BRACKET – TAIL SUPPORT, FORMED	1	
7	276859	GEAR – PINION 28 TEETH 2.5 MODULE (CNH/JD)	1	
	276352	GEAR – PINION 36 TEETH 2.5 MODULE (CLAAS/AGCO)	1	
8	339588	KIT – SPLIT FLANGE, 2 IN. CD61 [390]	1	
9	112867	O-RING – 3.53 X 56.14	1	
10	135901	FITTING – ELBOW 90° HYD	1	
	50220	O-RING – #20 ORB		
	135868	O-RING – #12 ORFS		
11	320116	FITTING – ELBOW 90° HYD	1	
12	136347	FITTING – ELBOW 90° HYD	2	
	30971	O-RING – #12 ORB		
	135867	O-RING – #10 ORFS		
13	135786	FITTING – ADAPTER	1	
	30971	O-RING – #12 ORB		
	135867	O-RING – #10 ORFS		
14	326222	FITTING – HYD ELBOW CODE 61	1	
15	252208	FITTING – 90° #16 FLANGE X #16 MALE ORFS	1	
	112868	O-RING – #16 FLANGE		
	135554	O-RING – #16 ORFS		
16	112866	KIT – SPLIT FLANGE, 1 INCH CD 61 [391]	1	

386. If replacing an Eaton knife drive pump, order knife drive pump service kit (MD #326299). Refer to Section *Knife Drive Pump Service Kit*.
387. If replacing an Eaton draper drive pump, order draper drive pump service kit (MD #326300). Refer to Section *Draper Drive Pump Service Kit*.
388. Used in gear pumps (MD #187252 and 295998).
389. To service seal kit on Eaton gear pumps (NSS), order seal kit (MD #326295).
390. O-ring (MD #112867), four bolts (MD #252641), and four washers (MD #135369).
391. Includes two half-split flanges (MD #194033), O-ring (MD #112868), four bolts (MD #252640), and four flat washers (MD #30191).

PUMP ASSEMBLY – EATON (2022 ONLY)

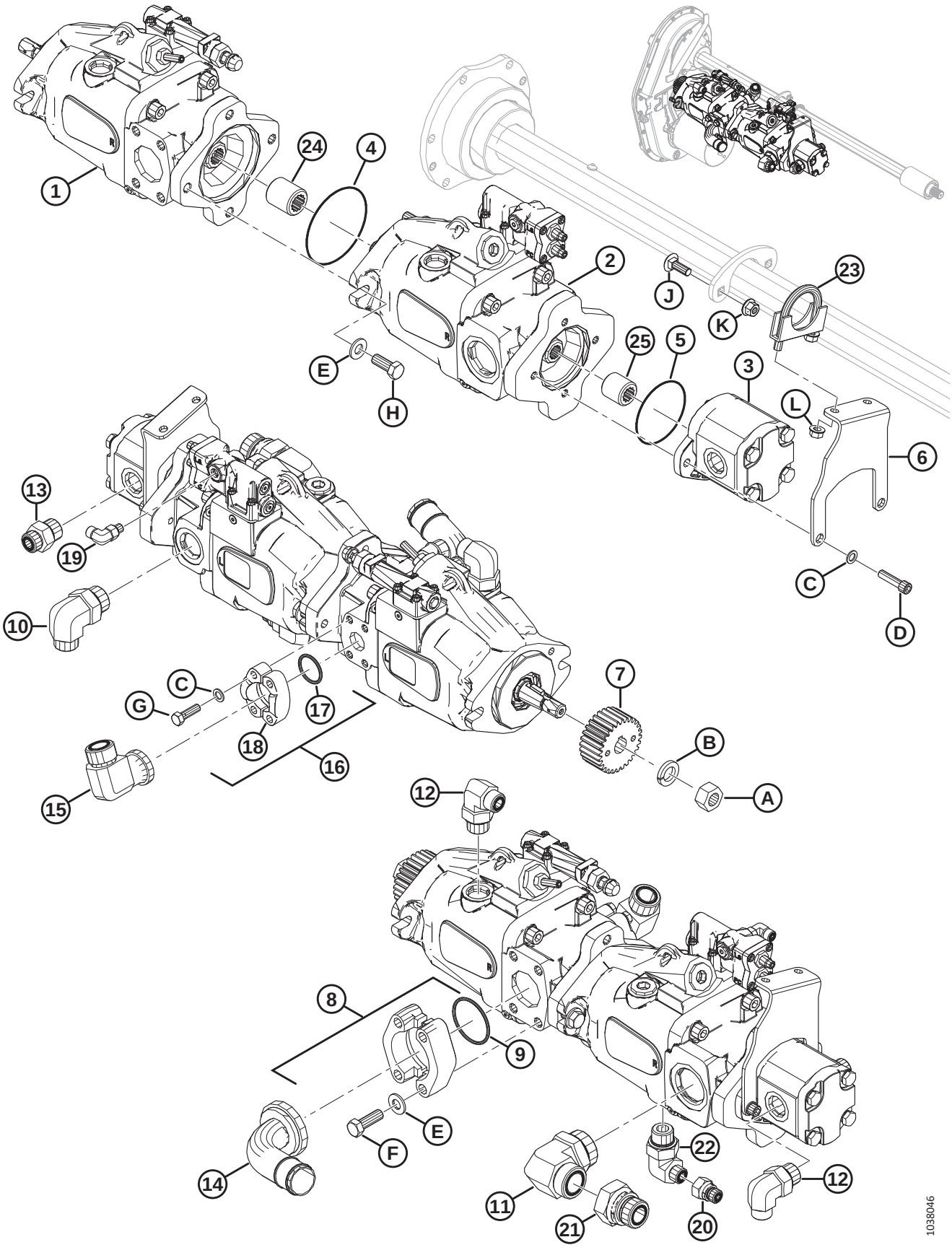

Ref	Part Number	Description	Qty	Serial Number
17	112868	O-RING – 1.296 IN. I.D. X 0.139 IN. WALL	1	
18	194033	FLANGE – HALF SPLIT, 1 INCH, CODE 61	2	
19	136447	FITTING – ELBOW 90° HYD	1	
	50223	O-RING – #4 ORB		
	135957	O-RING – #4 ORFS		
20	252681	FITTING – REDUCER HYD	1	
21	252076	FITTING – REDUCER HYD	1	
	135554	O-RING – #16 ORFS		
22	135890	FITTING – ELBOW 90° HYD	1	
	30971	O-RING – #12 ORB		
	135866	O-RING – Ø1.78 X Ø12.42		
23	136110	CLAMP – U-BOLT [392]	1	
24	326297	COUPLER – SPLINED, 13T (EATON)	1	
25	326298	COUPLER – SPLINED, 11T (EATON)	1	
A	18720	NUT – HEX 3/4-16 UNF GR 5 ZN PL		
B	18640	WASHER – REG. LOCK 3/4 IN. NOM. I.D. ZP		
C	30191	WASHER – HARDENED ASTM F436 3/8		
D	115672	SCREW – HEX SOC HD 3/8-16 X 1.5		
E	135369	WASHER – HARDENED ASTM F436 1/2		
F	252641	BOLT – HH 1/2-13 X 1.5-GR8-AA3L		
G	252640	BOLT – HH 3/8-16 X 1.25-GR8-AA3L		
H	21491	BOLT – HEX HD 1/2-13 X 1.25 GR5-AA1J		
J	184662	BOLT – RHSN TFL M10 X 1.5 X 30-8.8-AA1J [393]		
K	135799	NUT – HEX FLG CTR LOC M10 X 1.5-10 [393]		
L	21452	NUT – FLG SER FACE 3/8-16 UNC GR5 AA1J		

392. Comes with two flange nuts (MD #21452).
393. This hardware is required to install the P-clip that secures the case drain hose (MD #213167). Refer to Section *115 Hydraulics – Drives and Header Connection, page 351*.

109 Knife Drive Pump Service Kit

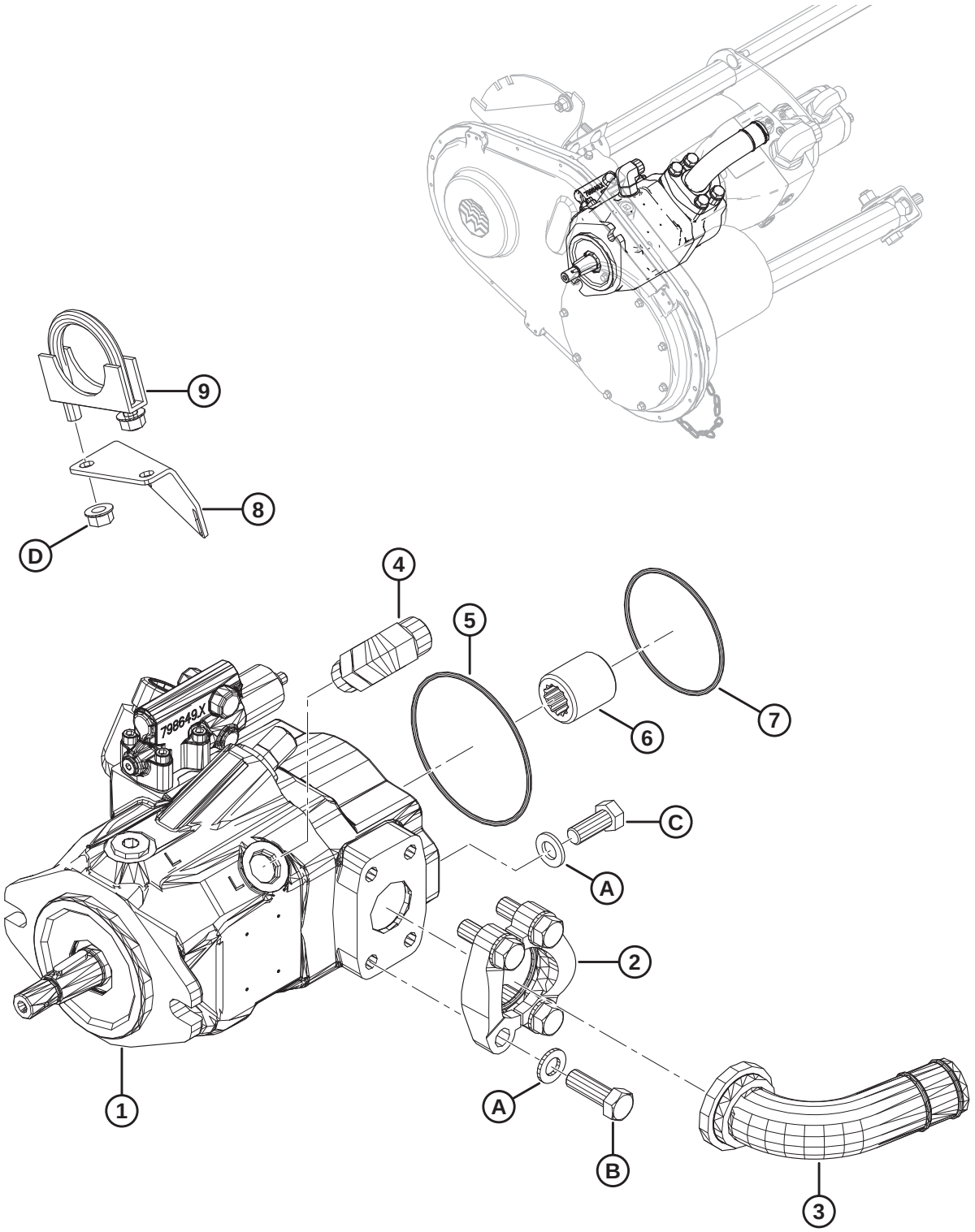

NOTE:

The knife pumps on Parker and Eaton pump assemblies are not serviceable. If replacing a Parker or Eaton knife pump, order the knife drive pump service kit (MD #326299). The service kit includes a Bosch knife pump, installation instructions, and the fittings, O-rings, and hardware required to convert the new Bosch pump to the Parker/Eaton setup.

Ref	Part Number	Description	Qty	Serial Number
	326299	**KIT – SERVICE , FM100 KNIFE PUMP** [394]		
1	**248089**	**PUMP – PISTON, KNIFE DRIVE** [395]	**1**	
2	**136246**	**KIT – SPLIT FLANGE, 1.5" CD 61** [396]	**1**	
3	**294833**	**FITTING – HYD ELBOW CODE 61**	**1**	
4	**136089**	**FITTING – ELBOW 90° HYD**	**1**	
	44210	**O-RING – #10 ORB**		
	135867	**O-RING – #10 ORFS**		
5	**294832**	**O-RING – 3.0 X 104.0**	**1**	
6	**295139**	**COUPLER – SPLINED, 13T**	**1**	
7	**136024**	**O-RING – 3.00 X 85.00**	**1**	
8	**326231**	**BRACKET – HOSE SUPPORT** [397]		
9	**136110**	**CLAMP – U-BOLT** [398]	**1**	
A	**184714**	**WASHER – FLAT REG M12-300HV**		
B	**252642**	**BOLT – HH 1/2-13 X 1.75-GR8-AA3L**		
C	**30630**	**BOLT – HEX HD TFL M12 X 1.75 X 30-8.8-A3L**		
D	**21452**	**NUT – FLG SER FACE 3/8-16 UNC GR5 AA1J**		

394. Order knife pump service kit (MD #326299) if replacing a Parker or Eaton knife pump. The kit includes instructions and all parts listed in this section.
395. O-ring (MD 294832) and shaft coupler (MD #295139) are included with the pump.
396. Includes two half-split flanges (MD #136106), O-ring (MD #135400), four bolts (MD #252641), and four flat washers (MD #184714).
397. Required if the Bosch pump is replacing an Eaton pump.
398. Required if the Bosch pump is replacing an Eaton pump. Comes with two flange nuts (MD #21452).

110 Draper Drive Pump Service Kit

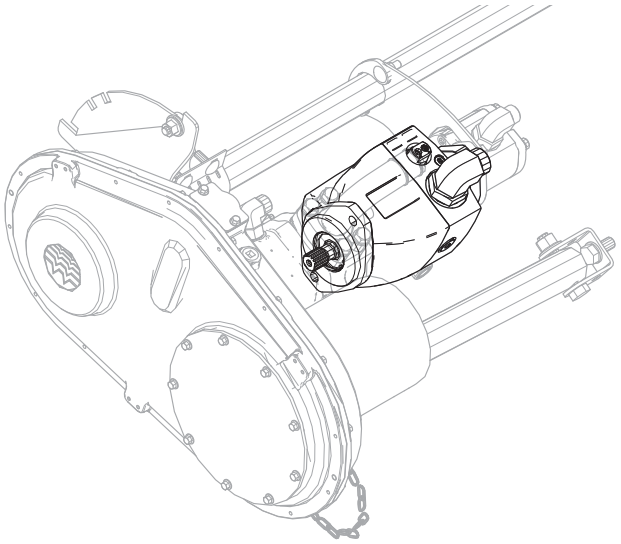

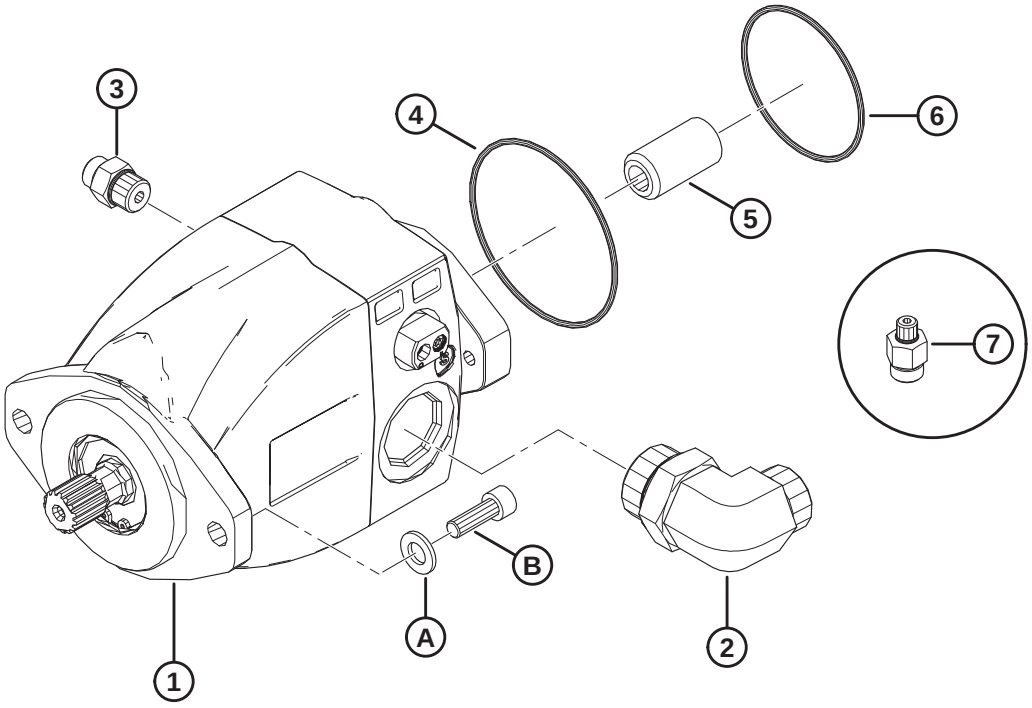

1038342

DRAPER DRIVE PUMP SERVICE KIT

NOTE:

The draper pumps on Parker and Eaton pump assemblies are not serviceable. If replacing a Parker or Eaton draper pump, order the draper drive pump service kit (MD #326300). The service kit includes a Bosch draper pump, installation instructions, and the fittings, O-rings, and hardware required to convert the new Bosch pump to the Parker/Eaton setup.

Ref	Part Number	Description	Qty	Serial Number
	326300	**KIT – SERVICE , FM100 KNIFE PUMP** [399]		
1	**311466**	**PUMP – PISTON, DRAPER DRIVE** [400]	**1**	
2	**136766**	**FITTING- – ELBOW 90° HYD**	**1**	
	50220	**O-RING – #20 ORB**		
	135554	**O-RING – #16 ORFS**		
3	**191705**	**FITTING – ADAPTER 6 MORFS X 8 MORB**	**1**	
	44209	**O-RING – #8 ORB**		
	135865	**O-RING – #6 ORFS**		
4	**294832**	**O-RING – 3.0 X 104.0**	**1**	
5	**295140**	**COUPLER – SPLINED, 20-11T**	**1**	
6	**136024**	**O-RING – 3.00 X 85.00**	**1**	
7	**135777**	**FITTING – ADAPTER** [401]	**1**	
	50223	**O-RING – #4 ORB**		
	135865	**O-RING – #6 ORFS**		
A	**184714**	**WASHER – FLAT REG M12-300HV**		
B	**135401**	**SCREW – HEX SOC HD TFL M10 X 1.5 X 30-8.8-AA1J**		

399. Order draper pump service kit (MD #326300) if replacing a Parker or Eaton draper pump. The kit includes instructions and all parts listed in this section.
400. O-ring (MD 136204) and shaft coupler (MD #295140) are included with the pump.
401. For use with diagnostic tee (MD #252554).

111 Input Driveline and Support

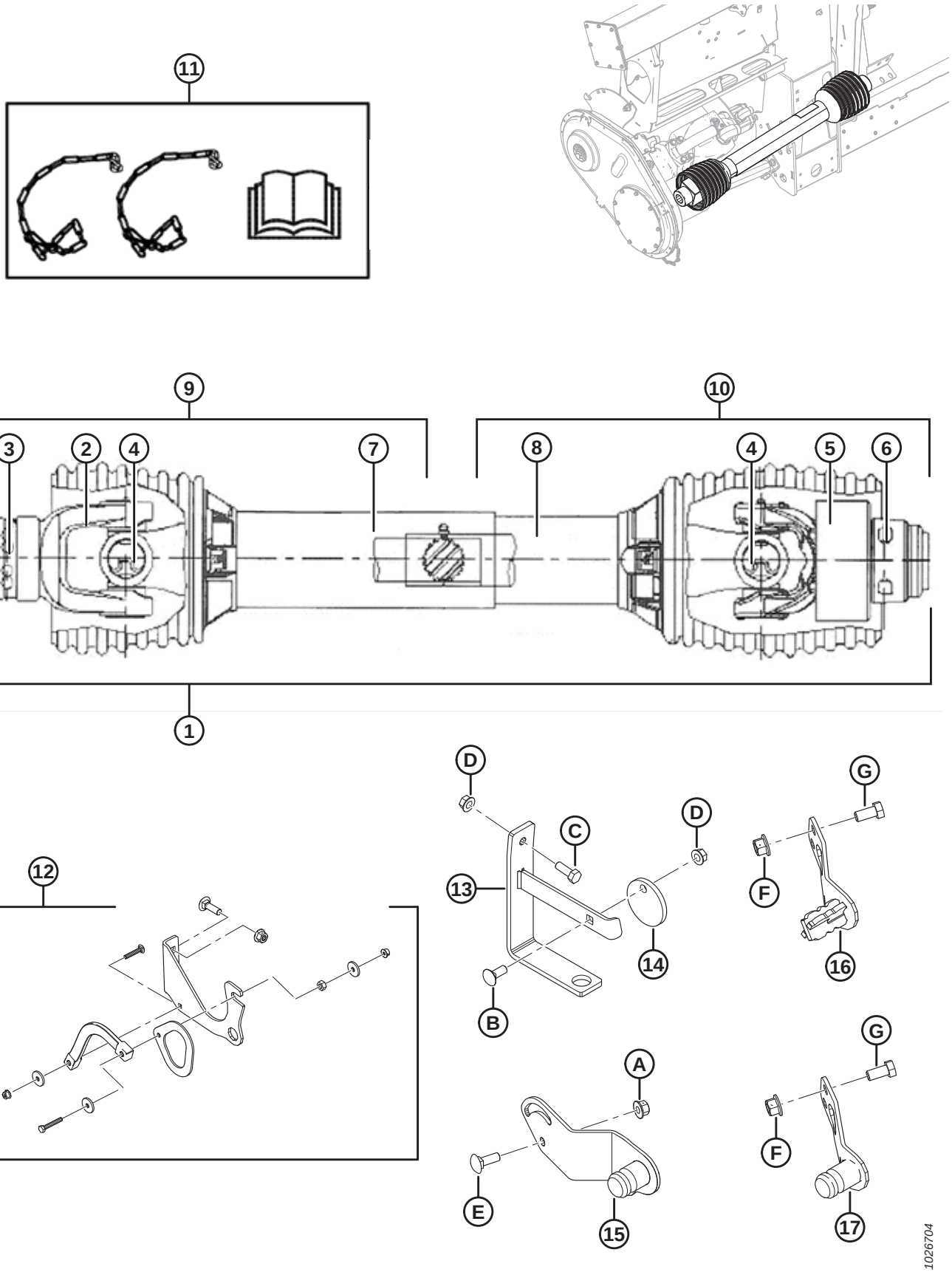

NOTE:

Half driveline kits for the combine end are listed under item #9, and half driveline kits for the header end are listed under item #10. Refer to the footnotes on individual parts to determine which combine models each kit is used for.

Ref	Part Number	Description	Qty	Serial Number
	B6595	KIT – 6T SPLINE CE DRIVELINE, CNH COMBINE [402]		
	B6596	KIT – 21T SPLINE CE DRIVELINE, CNH COMBINE [403]		
1	301996	6T DRIVELINE – COMPLETE (CE CERTIFIED) [404]	1	
	187553	21T DRIVELINE – COMPLETE (CE CERTIFIED) [405]	1	
	187550	21T DRIVELINE – COMPLETE (CE CERTIFIED) [406]	1	
	187551	HEX BORE DRIVELINE – COMPLETE (CE CERTIFIED) [407]	1	
	314306	1 3/4-20 SPL DRIVELINE – COMPLETE (CE CERTIFIED) [408]	1	
	301704	38-8 SPL DRIVELINE – COMPLETE (CE CERTIFIED) [409]	1	
	287814	SHIELD – REPAIR KIT CE	A/R	
2	133634	YOKE – SPRING LOCK, 6T	1	
	133637	YOKE – SPRING LOCK, 21T	1	
	133641	YOKE – SPRING LOCK, HEX BORE [407]	1	
	150890	YOKE – SPRING LOCK, 1 3/4-20 SPLINE [408]	1	
	314657	YOKE – SPRING LOCK, 38-8 SPLINE [409]	1	
3	40095	REPAIR KIT – SPRING LOCK YOKE (6T AND 21T)	A/R	
	133640	REPAIR KIT – SPRING LOCK YOKE (HEX BORE) [407]		
	150891	REPAIR KIT – SPRING LOCK YOKE (1 3/4-20 SPLINE) [408]		
	314656	REPAIR KIT – SPRING LOCK YOKE (38-8 SPLINE) [409]		
4	142777	CROSS JOURNAL ASSEMBLY [410]	2	
5	133631	YOKE – FREE MOTION	1	
6	133632	REPAIR KIT – AUTO LOCK YOKE		

402. Case IH Midrange/Flagship 10/20/30/40 Series, 2016 and prior New Holland CR/CX, and Versatile RT490. Kits available through Whole Goods only.
403. Model year 2017 and later Case and New Holland combines. Kits available through Whole Goods only.
404. Case IH Midrange/Flagship 10/20/30/40 Series, all New Holland CR/CX.
405. JD STS/S Series (except Widebody Walker Machines listed below), CLAAS Lexion, AGCO, and 2017 and later Case and New Holland combines.
406. JD Widebody Walker Machines – 9650/9660, 9660 WTS, and T9670.
407. Case IH 88 Series and 2300/2500 Series.
408. AGCO IDEAL™ 7/8/9.
409. Rostselmash 760/780.
410. Includes clips and lube fitting.

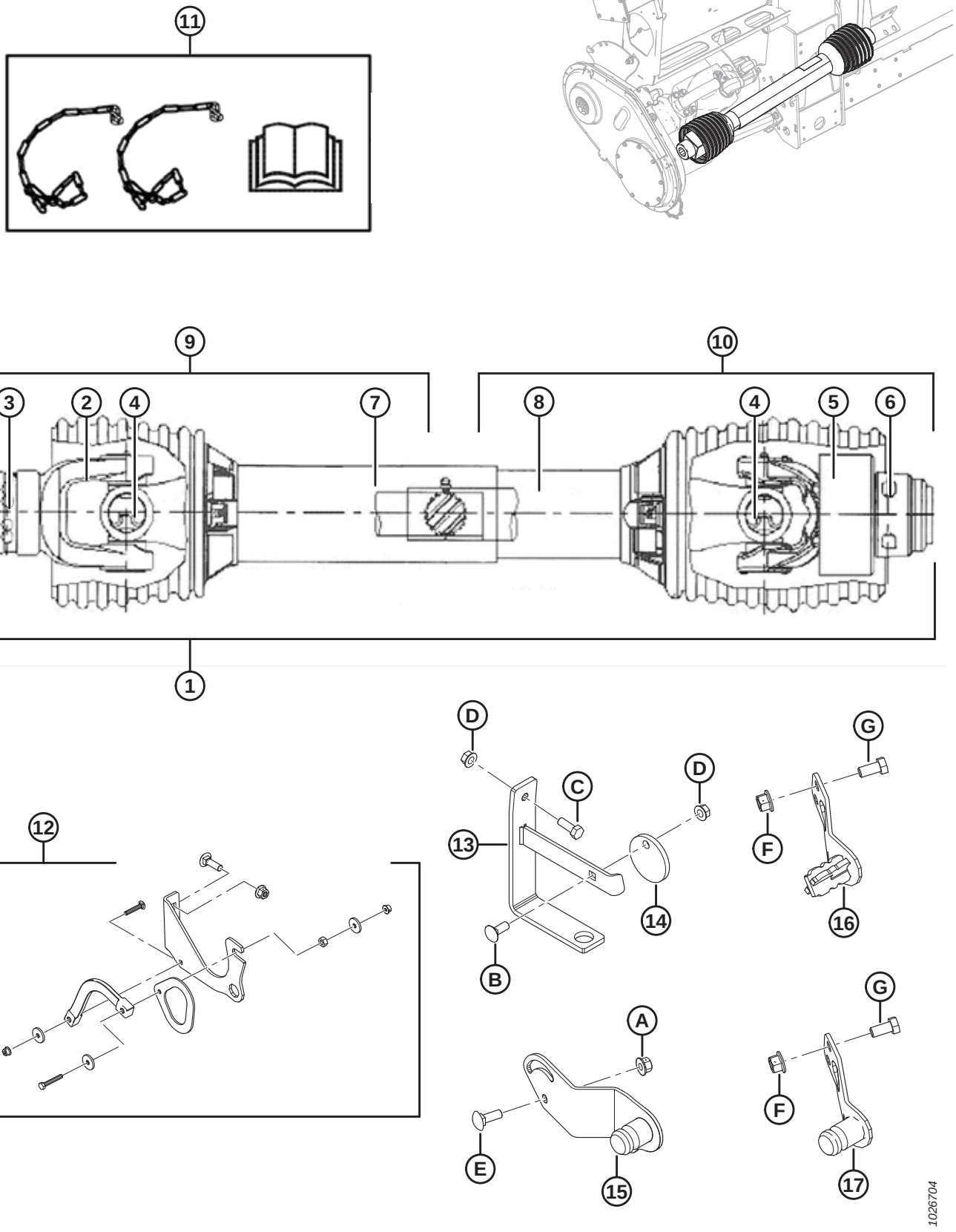
11
9
10
3
2
4
7
8
4
5
6
1
12
D
C
D
13
14
B
G
F
16
A
E
15
G
F
17
1026704

Ref	Part Number	Description	Qty	Serial Number
7	322207	KIT – GUARD, OUTER (6T AND 21T DRIVELINE) [411]	1	
	322203	KIT – GUARD, OUTER (21T DRIVELINE) [412]	1	
	322202	KIT – GUARD, OUTER (HEX BORE DRIVELINE) [413]	1	
	322205	KIT – GUARD, OUTER (1 3/4-20, 38-8 SPL DRIVELINE) [414]	1	
8	322208	KIT – GUARD, INNER (6 T AND 21T DRIVELINE) [411]	1	
	322209	KIT – GUARD, INNER (21T DRIVELINE) [412]	1	
	322210	KIT – GUARD, INNER (HEX BORE DRIVELINE) [413]	1	
	322211	KIT – GUARD, INNER (1 3/4-20, 38-8 SPL DRIVELINE) [414]	1	
9	301997	ASSY – JOINT AND SHAFT HALF CE (6T COMBINE END) [415]	1	
	322212	KIT – HALF DRIVELINE, OUTER (21T COMBINE END) [416]	1	
	322199	KIT – HALF DRIVELINE, OUTER (21T COMBINE END) [412]	1	
	322198	KIT – HALF DRIVELINE, OUTER (HEX BORE COMBINE END) [413]	1	
	314658	ASSY – JOINT AND SHAFT HALF CE (1 3/4-20 SPLINE COMBINE END) [417]	1	
	314653	ASSY – JOINT AND SHAFT HALF CE (38-8 SPLINE COMBINE END) [418]	1	
	220766	SHIELD – REPAIR KIT CE	A/R	
10	322257	KIT – HALF DRIVELINE, INNER (6T AND 21T HEADER END) [411]	1	
	322258	KIT – HALF DRIVELINE, INNER (21T HEADER END) [412]	1	
	322259	KIT – HALF DRIVELINE, INNER (HEX BORE HEADER END) [413]	1	
	322234	KIT – HALF DRIVELINE, INNER (1 3/4-20 AND 38-8 SPL HEADER END) [414]	1	
	220766	SHIELD – REPAIR KIT CE	A/R	
11	171277	KIT – CE CONVERSION (EXPORT) [419]	A/R	–346189

411. JD STS/S Series (except Widebody Walker Machines listed below), CLAAS Lexion, AGCO, Case IH Midrange/Flagship 10/20/30/40 Series, all New Holland CR/CX, 2017 and later CNH combines, and Versatile RT490.
412. JD Widebody Walker Machines – 9650/9660, 9660 WTS, and T9670.
413. Case IH 88 Series and 2300/2500 Series.
414. AGCO IDEAL™ 7/8/9 and Rostselmash 760/780.
415. Case IH Midrange/Flagship 10/20/30/40 Series, 2016 and prior New Holland CR/CX, and Versatile RT490.
416. JD STS/S Series (except Widebody Walker Machines listed below), CLAAS Lexion, AGCO, and 2017 and later Case and New Holland combines.
417. AGCO IDEAL™ 7/8/9.
418. Rostselmash 760/780.
419. Includes two chains, decals, CE manual, and instruction sheet. Service part only for float modules made in model year 2018 and prior.

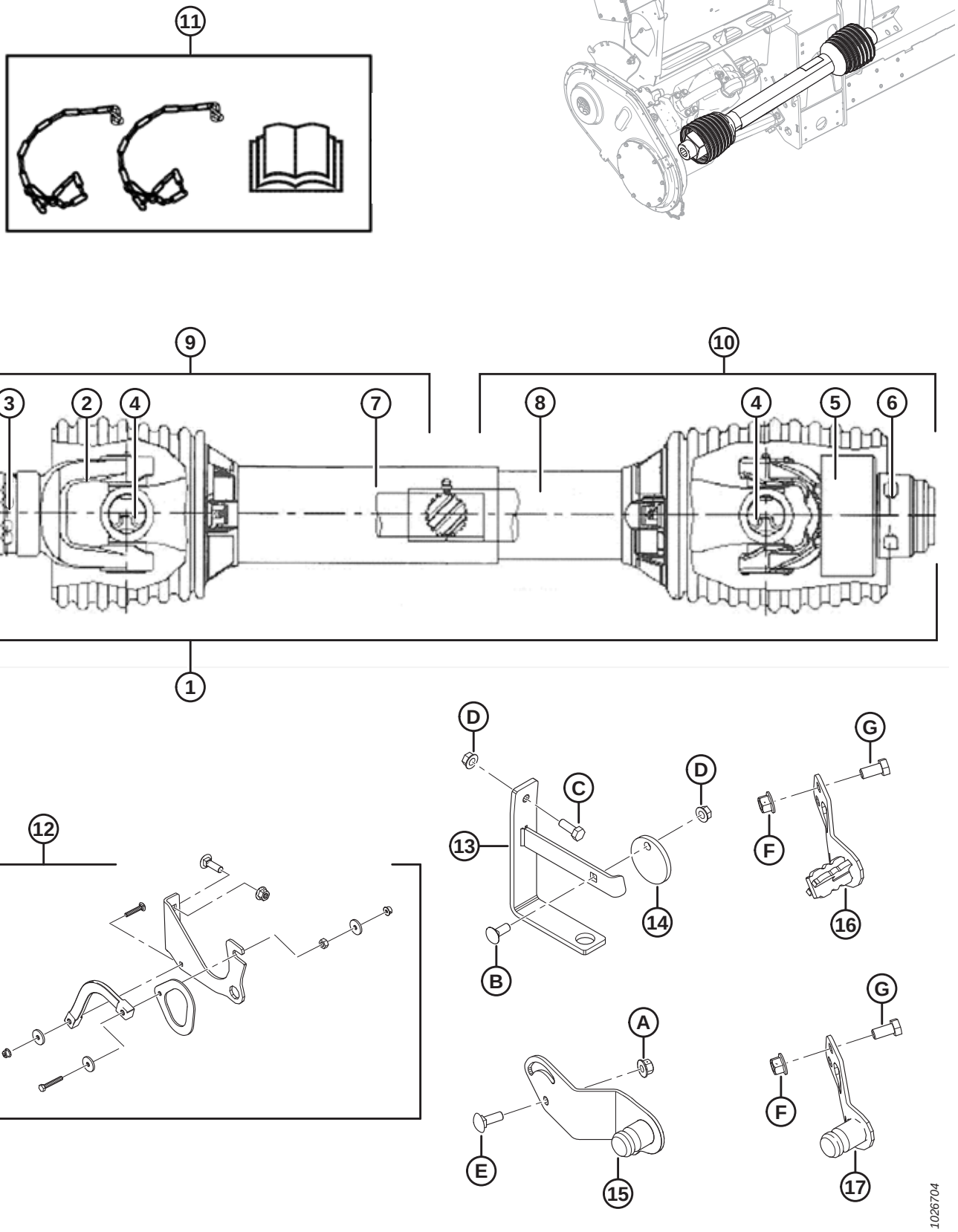
11
9
10
3
2
4
7
8
4
5
6
1
12
D
C
D
13
14
B
G
F
16
A
E
15
G
F
17
1026704

Ref	Part Number	Description	Qty	Serial Number
12	REF	ASSY – DRIVELINE SUPPORT [420]	1	
13	133166	BRACKET – DRIVELINE HANGER (2016–PRIOR) [421]	1	–301189
14	133165	DISC – LOCK, DRIVELINE HANGER (2016–PRIOR) [421]	1	–301189
15	276566	SUPPORT – WELDMENT PTO STORAGE [422]	1	
16	308015	SUPPORT – WELDMENT PTO STORAGE (6T CNH) [423]	1	
17	308124	SUPPORT – WELDMENT PTO STORAGE (21T CNH) [424]	1	301190–
A	135799	NUT – HEX FLG CTR LOC M10 X 1.5-10-A3L		
B	19965	BOLT – RHSN 3/8-16 X 1-GR5-ZP		
C	20077	BOLT – HEX HD 3/8 NC X 1.0 LG GR 5 ZP [425]		
D	30228	NUT – FLG DT SMTH FACE 0.375-16 UNC		
E	184662	BOLT – RHSN TFL M10 X 1.5 X 30-8.8-A3L		
F	136431	NUT – HEX FLG CTR LOCK M12 X 1.75-10		
G	50155	BOLT – HEX HD TFL M12 X 1.75 X 25-8.8-AA1J		

420. Includes support (NSS), hook (NSS), strap (NSS), and hardware. Driveline support assembly replaced by bracket (MD #133166), disc (MD #133165), and hardware B–D for float modules made in model year 2016 and prior.
421. Service part only for float modules made in model year 2016 and prior, AGCO IDEAL™ 7/8/9, Case IH 2300/2500 Series, and Rostselmash 760/780.
422. Gleaner R/S, CLAAS Lexion, John Deere, and AGCO.
423. Case IH Midrange/Flagship 10/20/30/40 Series, all New Holland CR/CX, and Versatile RT490.
424. Model year 2017 and later CNH combines.
425. Bolt E (MD #184662) and nut A (MD #135799) used to secure driveline hanger bracket (MD #133166) for AGCO IDEAL™ 7/8/9, Case IH 2300/2500 Series, and Rostselmash 760/780.

112 Hydraulics – Frame Components

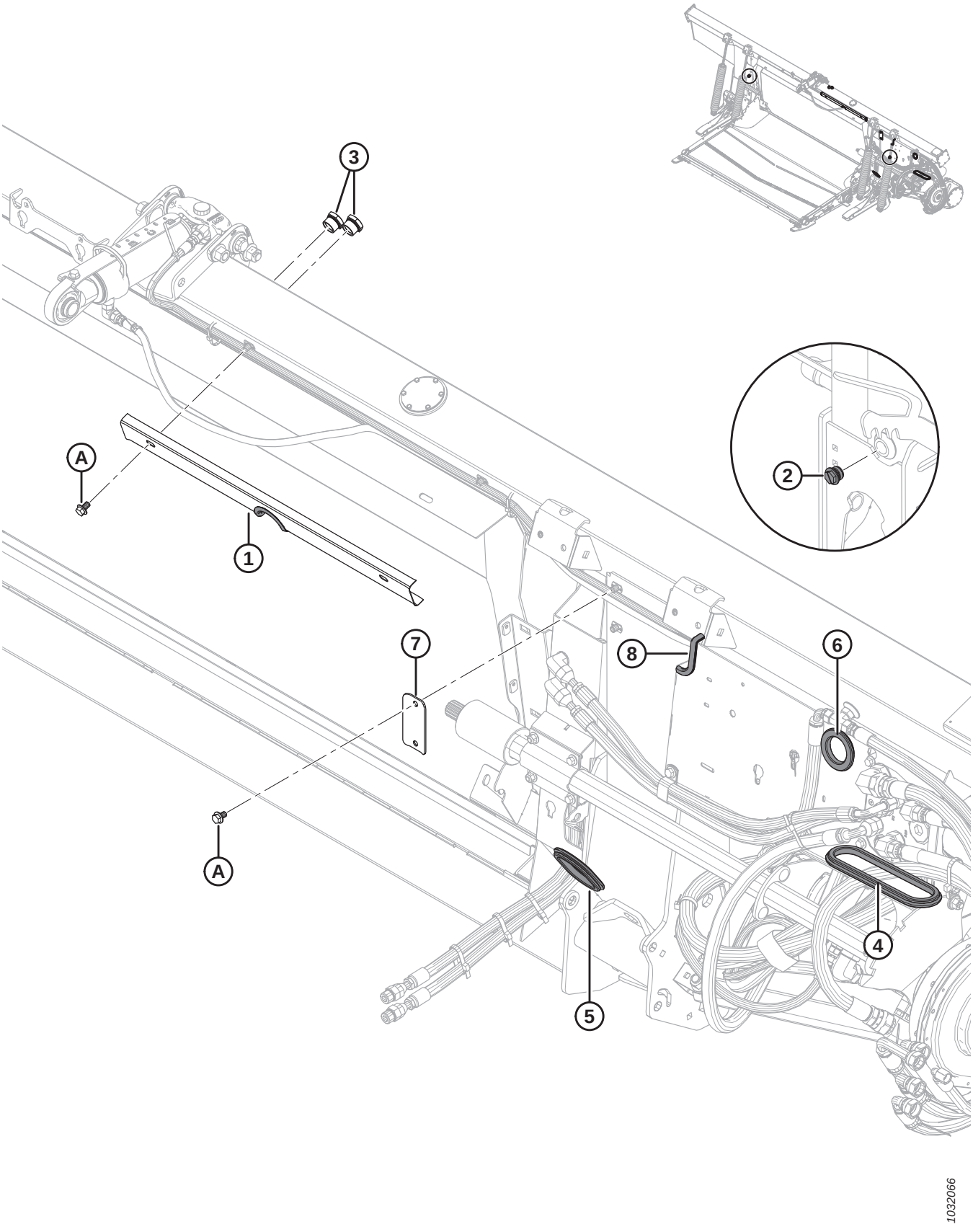

Ref	Part Number	Description	Qty	Serial Number
1	294949	ASSY – HOSE HOLDER [426]	1	
	109791	MOULDING	1	
2	103575	PLUG – HEX CW O-RING [427]	2	371190–
	156051	PLUG – #16 ORB [428]	2	–371189
3	304668	SIGHT GLASS	2	
4	276033	GROMMET – RUBBER	1	
5	276034	GROMMET – RUBBER	1	
6	276560	GROMMET – RUBBER	1	
7	287272	CLAMP – HOSE	1	
8	31889	MOULDING (SPEC 31886)	1	
A	136151	BOLT – HEX FLG HD TFL M10 X 1.5 X 16-8.8-A3L		

426. Includes holder with cutout (not serviced separately) and moulding (MD #109791).
427. For model year 2020 and later. Two drain plugs are located on the rear of the float module frame.
428. For model year 2019 and prior. Two drain plugs are located on the rear of the float module frame.

113 Hydraulics – Center-Link and Header Tilt / Reel Fore-Aft

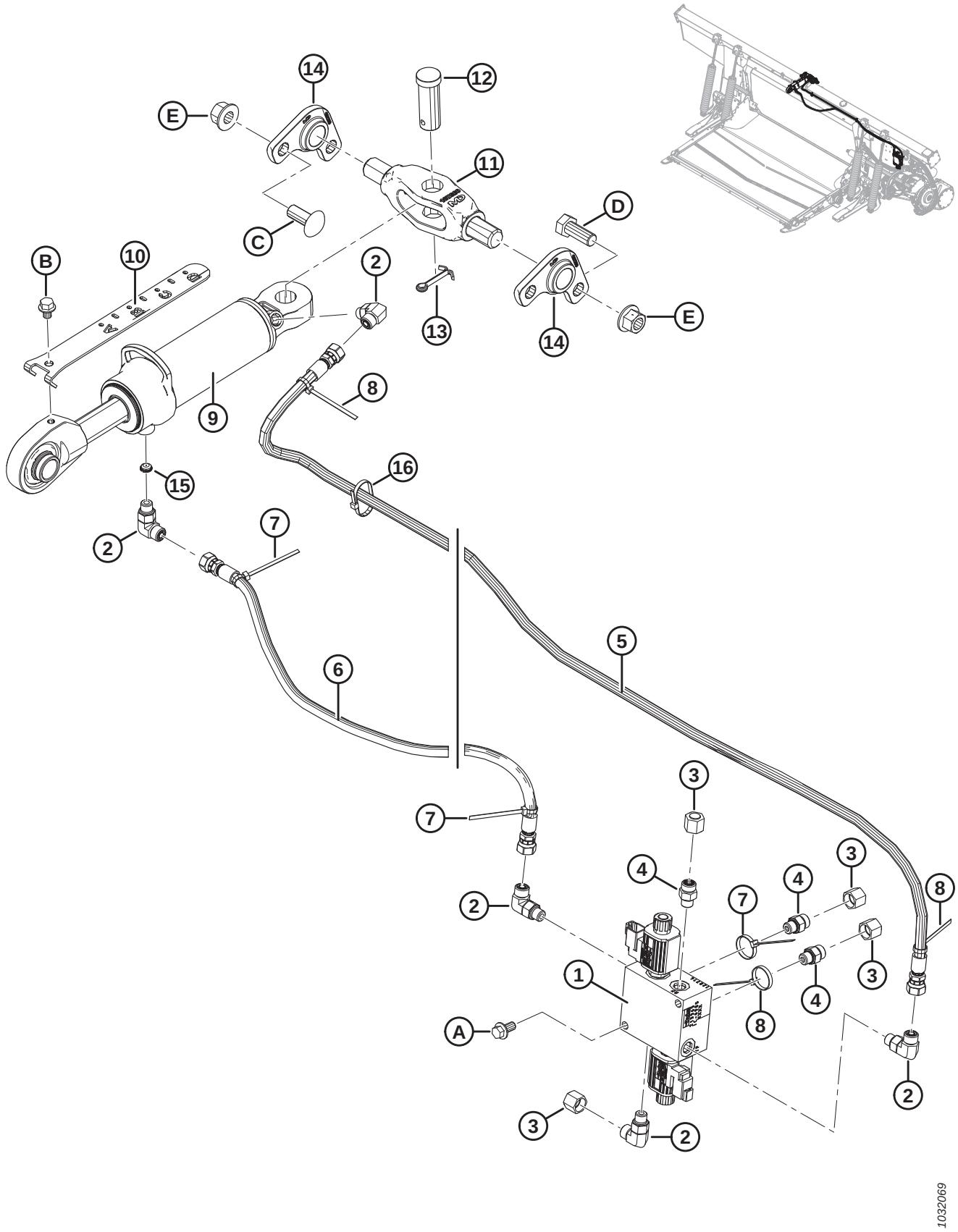

Ref	Part Number	Description	Qty	Serial Number
1	213363	MANIFOLD – SELECTOR VALVE	1	
	287449	COIL – 12VDC-.625 IN.		
	287450	VALVE – POPPET		
	287451	SEAL KIT – POPPET VALVE		
2	136095	FITTING – ELBOW 90° HYD	5	
	50219	O-RING – #6 ORB		
	135865	O-RING – #6 ORFS		
3	136325	CAP – HYD, SAE, 6 ORFS	4	
4	135778	FITTING – ADAPTER	3	
	50219	O-RING – #6 ORB		
	135865	O-RING – #6 ORFS		
5	213307	HOSE – HYD, TILT FORWARD	1	
6	311491	HOSE – HYD, TILT BACK	1	
	311750	KIT – TILT HOSE SERVICE [429]	A/R	–371189
7	40702	FASTENER – CABLE TIE, RED	3	
8	49227	FASTENER – CABLE TIE, GREEN	3	
9	187621	CYLINDER – TOP LINK	1	
	123978	SEAL KIT		
10	187637	INDICATOR – TILT	1	
11	187660	PIVOT – MACHINING	1	
12	135995	PIN – CLEVIS	1	
13	18609	PIN – COTTER 1/4 DIA X 2 ZP	1	
14	187730	CASTING – PIVOT	2	
15	252692	RESTRICTOR – #6 ORB X .065 IN.	1	
16	21763	FASTENER – CABLE TIE, BLACK	2	
A	152655	BOLT – HEX FLG HD M10 X 1.5 X 20-8.8-A3L		
B	30693	BOLT – FLANGE (SER FACE) .375-16 UNC X 0.50 LG		
C	136699	BOLT – RHSSN M16 X 2 X 40-8.8-AA3L		
D	111528	BOLT – HEX HD TFL M16 X 2 X 40-8.8-A3L		
E	136440	NUT – HEX FLG CTR LOC M16 X 2-10-A3L		

429. Tilt Hose Service kit (MD #311750) is used to service previous production. Kit includes tilt back hose (MD #311491) and installation instructions.

114 Hydraulics – Feed Deck

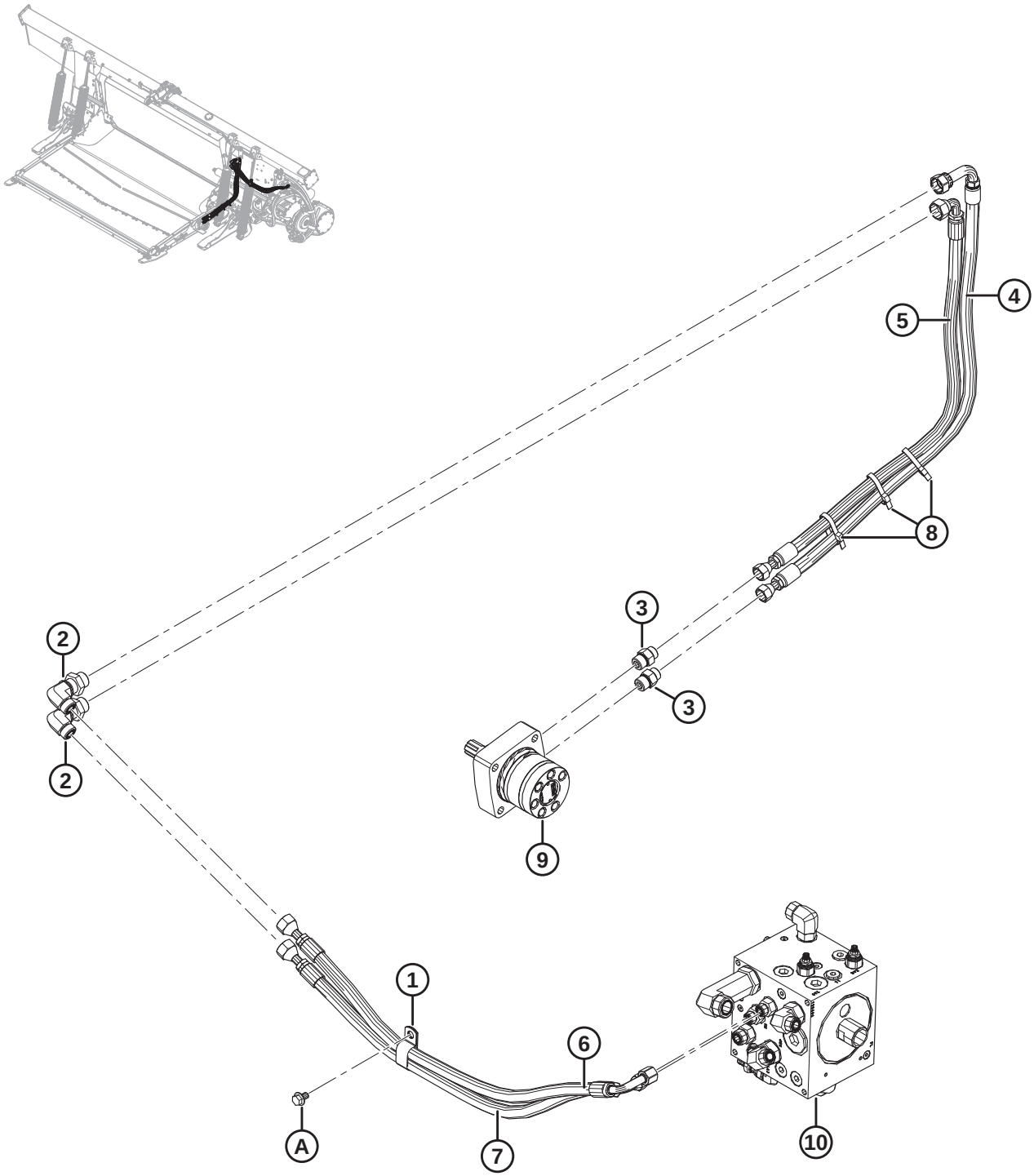

Ref	Part Number	Description	Qty	Serial Number
1	103738	CLAMP – PVC INSULATED 13/16 IN. TUBE SIZE	1	
2	136760	FITTING – ELBOW 90° BULKHEAD HYD 10-10	2	
	135867	O-RING – #10 ORFS		
3	184463	FITTING – ADAPTER 8 MORFS X 10 MORB	2	
	44210	O-RING – #10 ORB		
	135866	O-RING – #8 ORFS		
4	213827	HOSE – HYD, FEED DECK PRESSURE	1	
5	213828	HOSE – HYD, FEED DECK RETURN	1	
6	287912	HOSE – HYD, FEED DECK PRESSURE	1	
7	287913	HOSE – HYD, FEED DECK RETURN A	1	
8	30753	FASTENER – CABLE TIE (BLACK)	3	
9	REF	MOTOR – HYD [430]		
10	REF	MANIFOLD – DRIVE [431]		
A	136151	BOLT – HEX FLG HD TFL M10 X 1.5 X 16-8.8-A3L		

430. Refer to Section *93 Feed Deck – Draper Drive and Rollers, page 287*.
431. Refer to Section *116 Hydraulics – Drive Manifold Assembly, page 355*.

115 Hydraulics – Drives and Header Connection

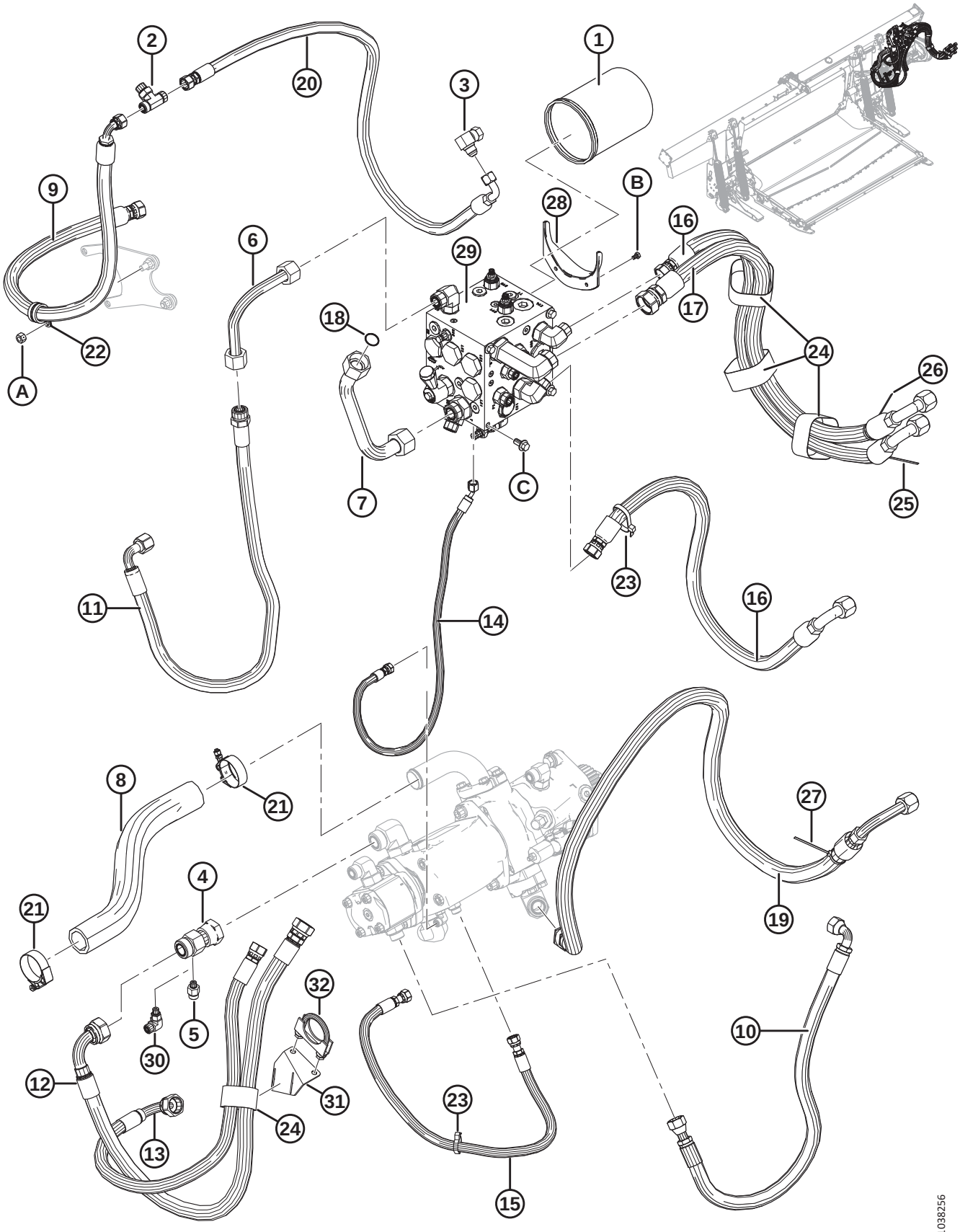

Ref	Part Number	Description	Qty	Serial Number
1	**320360**	**FILTER – HYD C/W 2X SEALS**	**1**	
2	136684	FITTING – BRANCH TEE ORFS 8-8-8	1	
	44209	O-RING – #8 ORB		
	135866	O-RING – #8 ORFS		
3	30314	FITTING – ELBOW 90° HYD	1	
4	252554	FITTING – TEE HYD, GAUGEPORT	1	
	135868	O-RING – #16 ORFS		
5	**135777**	**FITTING – ADAPTER** [432]	**1**	
	50223	O-RING – #4 ORB		
	135865	O-RING – #6 ORFS		
6	213329	LINE – HYD, S2	1	
7	294938	LINE – RETURN	1	
8	287911	HOSE – SUCTION	1	
9	213167	HOSE – CASE DRAIN (CD)	1	
10	213174	HOSE – HYD, GEAR PUMP PRESS (P2)	1	
11	**326240**	**HOSE – HYD, GEAR PUMP SUCTION (S2)**	**1**	
12	**326242**	**HOSE – HYD, S1**	**1**	
13	**326243**	**HOSE – HYD (P1)**	**1**	
14	213864	HOSE – HYD (LS)	1	
15	276567	HOSE – HYD, CASE FLUSH	1	
16	287907	HOSE – HYD, FLX SD P AND R	2	
17	287908	HOSE – HYD, FLX KR	1	
18	135554	O-RING – #16 ORFS	1	
19	287910	HOSE – HYD, FLX KP	1	
20	287909	HOSE – HYD, FLX CD	1	
21	245753	CLAMP – T-BOLT	2	
22	209032	CLAMP – P-CLIP, INSULATED, 1 IN.	1	
23	30753	FASTENER – CABLE TIE (BLACK)	3	
24	170851	FASTENER – CINCH STRAP 10 IN. LG	**1**	
	295927	**FASTENER – CINCH STRAP 8 IN. LG**	**1**	
	135444	FASTENER – CINCH STRAP 6 IN. LG	**A/R**	
25	40702	FASTENER – CABLE TIE (RED)	1	
26	40703	FASTENER – CABLE TIE (BLUE)	1	
27	40704	FASTENER – CABLE TIE (ORANGE)	1	
28	213743	FLANGE – OIL DRAIN SPOUT	1	
29	REF	MANIFOLD – DRIVE [433]		
30	136337	FITTING – ELBOW 90° HYD [434]	1	
	50223	O-RING – #4 ORB		
	135865	O-RING – #6 ORFS		

432. Used on Bosch configurations only.
433. Refer to Section *116 Hydraulics – Drive Manifold Assembly, page 355*.
434. Used on Parker and Eaton configurations only.

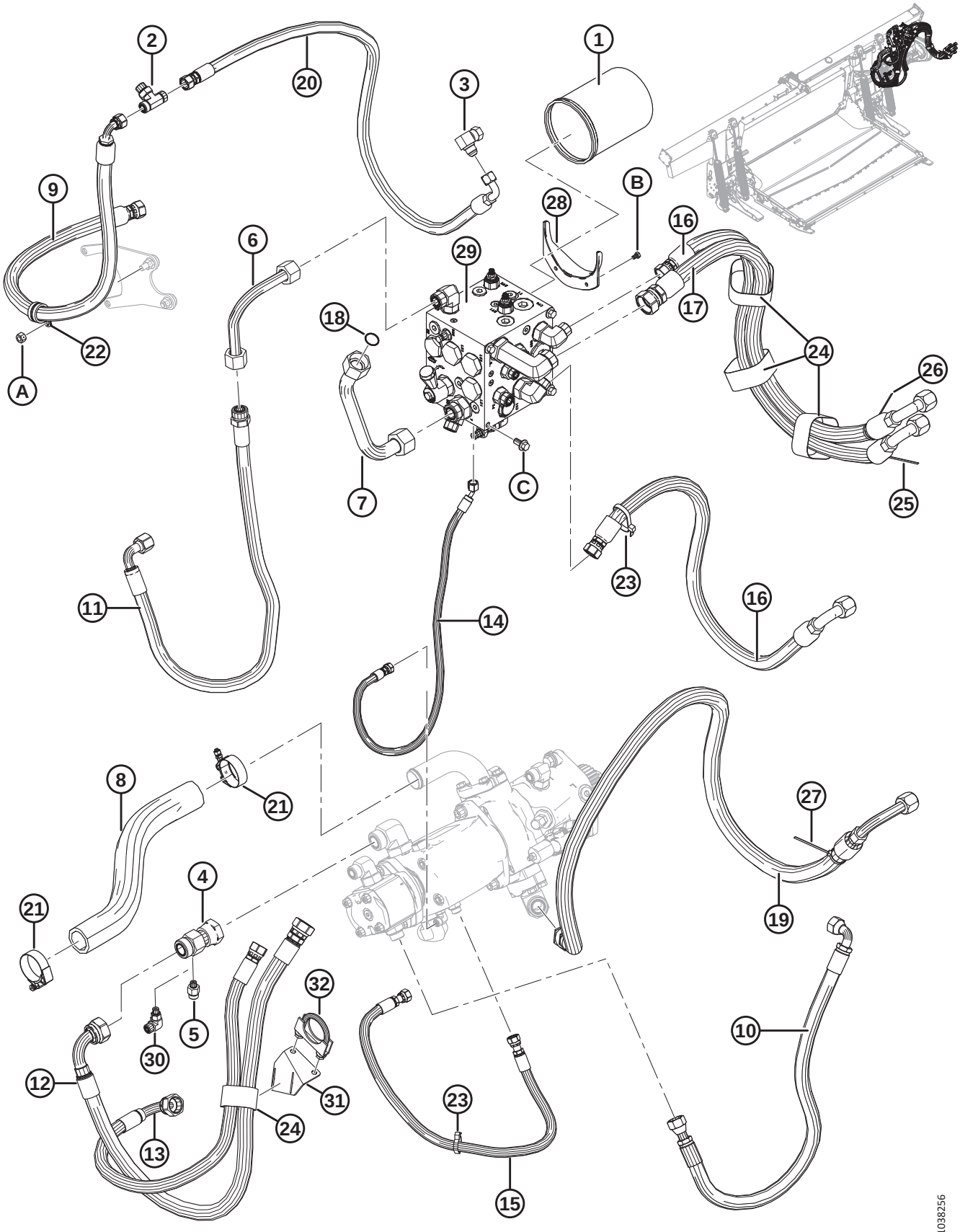
1
2
3
4
5
6
7
8
9
10
11
12
13
14
15
16
17
18
19
20
21
22
23
24
25
26
27
28
29
30
31
32
A
B
C
1038256

Ref	Part Number	Description	Qty	Serial Number
31	**326231**	**BRACKET – HOSE SUPPORT** [435]	**1**	
32	**136110**	**CLAMP – U-BOLT** [436]	**1**	
A	135800	NUT – HEX CTR LOC SPCL M10 X 1.5-9-A3L		
B	136561	BOLT – HEX HD TFL M6 X 1 X 10-8.8-A3L		
C	152655	BOLT – HEX FLG HD M10 X 1.5 X 20-8.8-A3L		

435. Used to secure the hoses to the output shaft on Parker configurations.
436. Used to secure the hoses to the output shaft on Parker configurations. Comes with two flange nuts (MD #21452).

116 Hydraulics – Drive Manifold Assembly

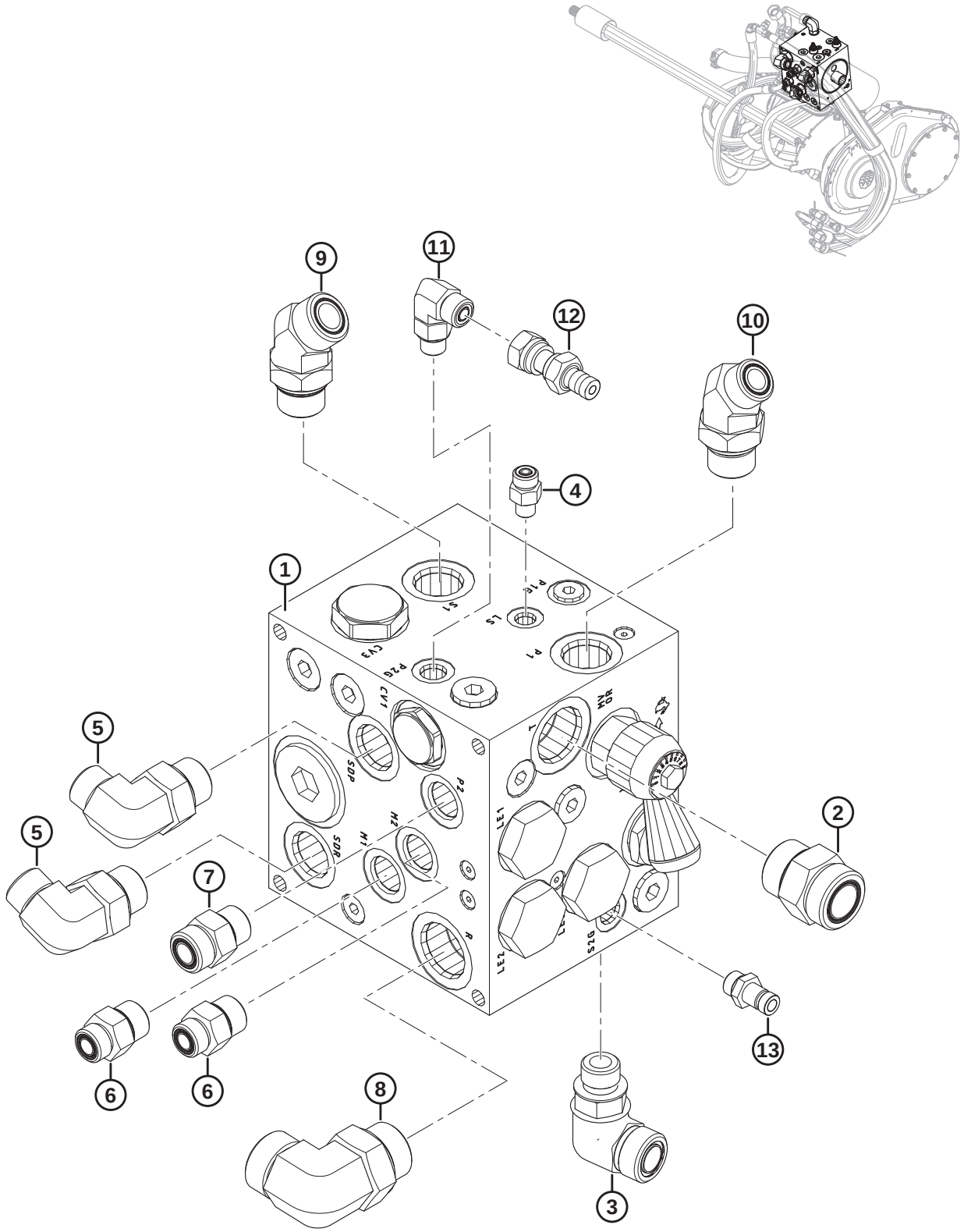

Ref	Part Number	Description	Qty	Serial Number
1	287771	ASSEMBLY – MANIFOLD, DRIVE [437]	1	
2	135791	FITTING – ADAPTER (T)	1	
	50220	O-RING – #20 ORB		
	135554	O-RING – #16 ORFS		
3	136303	FITTING – ELBOW 90° HYD (S2)	1	
	44210	O-RING – #10 ORB		
	135868	O-RING – #12 ORFS		
4	135775	FITTING – ADAPTER (LS)	1	
	50223	O-RING – #4 ORB		
	135957	O-RING – #4 ORFS		
5	136347	FITTING – ELBOW 90° HYD (SDP, SDR)	2	
	30971	O-RING – #12 ORB		
	135867	O-RING – #10 ORFS		
6	184463	FITTING – ADAPTER 8 MORFS X 10 MORB (M1, M2)	2	
	44210	O-RING – #10 ORB		
	135866	O-RING – #8 ORFS		
7	184461	FITTING – ADAPTER 10 MORFS X 10 MORB (P2)	1	
	44210	O-RING – #10 ORB		
	135867	O-RING – #10 ORFS		
8	135734	FITTING – ELBOW 90° HYD (R)	1	
	50220	O-RING – #16 ORB		
	135554	O-RING – #16 ORFS		
9	136418	FITTING – ELBOW 45° HYD (S1)	1	
	30971	O-RING – #12 ORB		
	135868	O-RING – #12 ORFS		
10	136458	FITTING – ELBOW 45° HYD (P1)	1	
	30971	O-RING – #12 ORB		
	135867	O-RING – #10 ORFS		
11	136095	FITTING – ELBOW 90° HYD (P2G)	1	
	50219	O-RING – #6 ORB		
	135865	O-RING – #6 ORFS		
12	252662	FITTING – NIPPLE HYD	1	
13	135587	NIPPLE – HYDRAULIC (S2G)	1	

437. For service parts, refer to Section *117 Drive Manifold Assembly – Service Parts, page 357*.

117 Drive Manifold Assembly – Service Parts

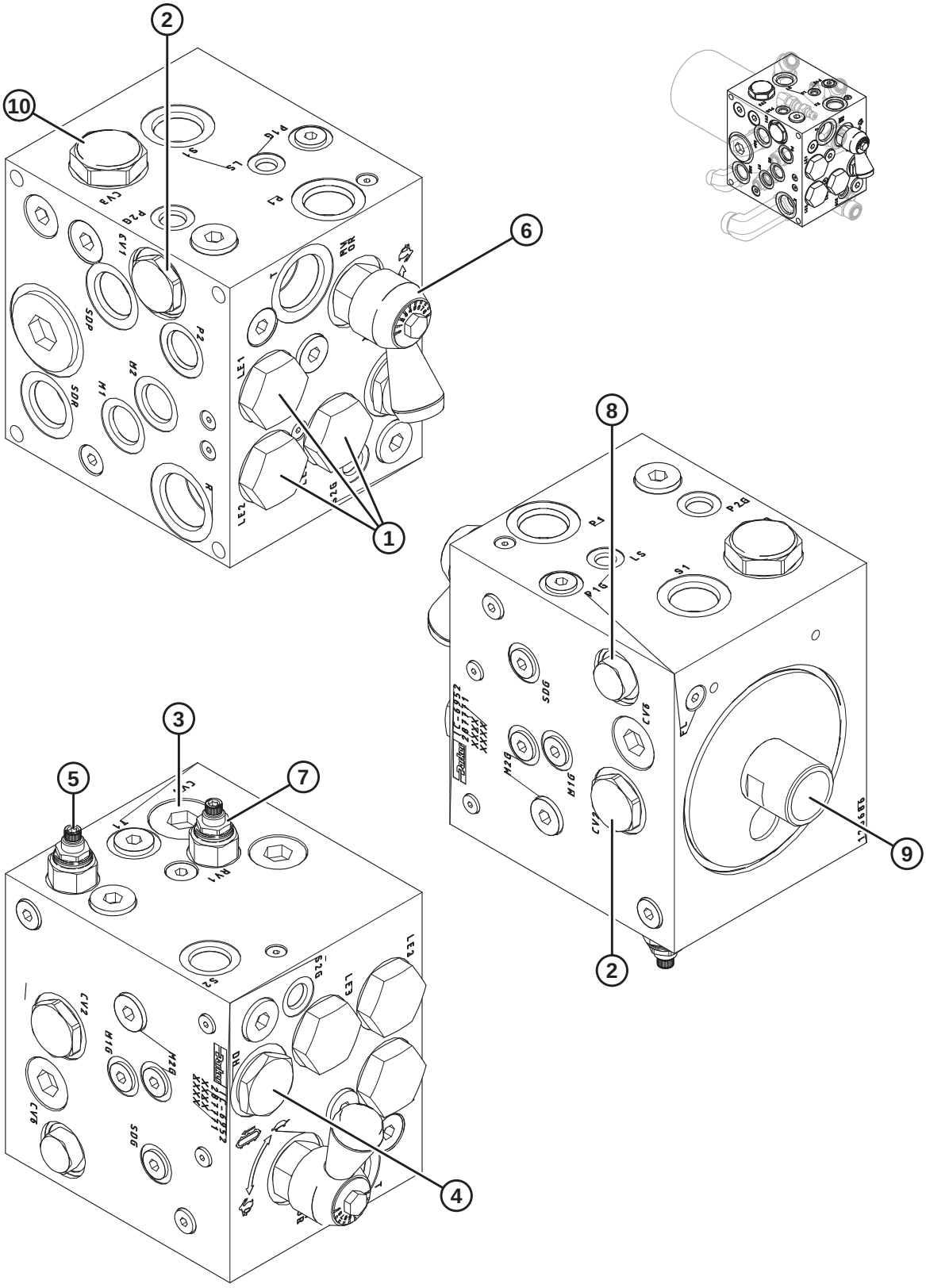

DRIVE MANIFOLD ASSEMBLY – SERVICE PARTS

Ref	Part Number	Description	Qty	Serial Number
	287771	ASSEMBLY – MANIFOLD, DRIVE [438]		
1	287466	VALVE – LOGIC ELEMENT-16 (LE1, LE2, LE3)	3	
	220963	SEAL KIT		
2	287467	VALVE – VENTED CHECK-12 (CV1, CV2)	2	
	220965	SEAL KIT		
3	287468	VALVE – BYPASS, 25 PSI (CV4) [439]	1	
4	287469	VALVE – DIVERTER (DH)	1	
	287473	SEAL KIT		
5	220951	VALVE – P.O. RELIEF, 2500 PSI (RV2)	1	
	220960	SEAL KIT		
6	287470	VALVE – NEEDLE (MVOR)	1	
	287193	HANDLE – FLOW CONTROL		
	220960	SEAL KIT		
7	287613	VALVE – RELIEF, 1500 PSI (RV1)	1	
	220960	SEAL KIT		
8	287471	VALVE – CHECK-08 (CV6)	1	
	220965	SEAL KIT		
9	245160	FITTING – FILTER ADAPTER	1	
10	287472	VALVE – CHECK REG-16, 8 PSI (CV3)	1	
	220961	SEAL KIT		

438. Refer to Section *116 Hydraulics – Drive Manifold Assembly, page 355*.
439. Bypass valve (MD #287468) is located underneath plug.

118 Selector Valve

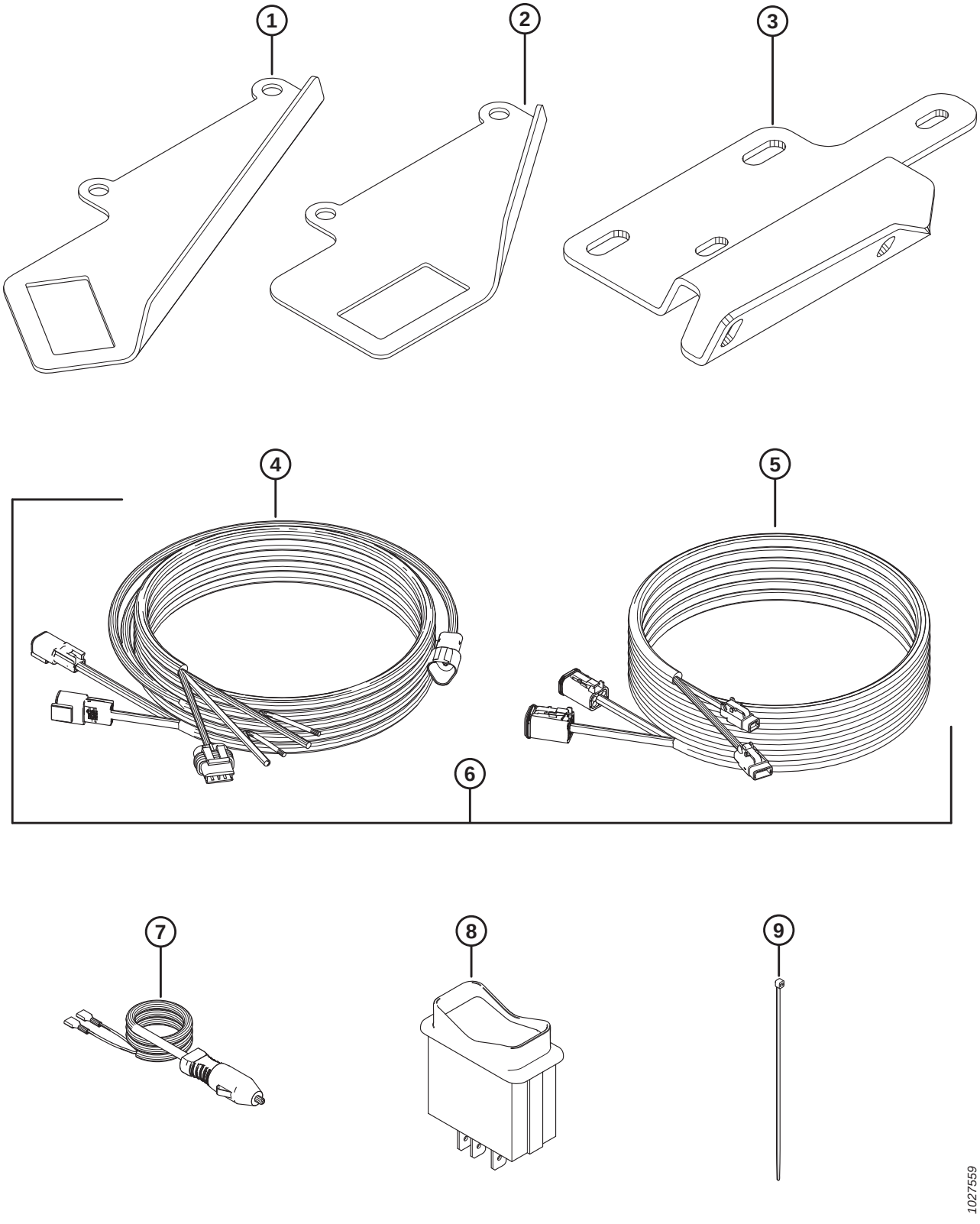

Ref	Part Number	Description	Qty	Serial Number
1	158377	SUPPORT – ROCKER SWITCH, IN CAB MTG BRACKET FOR FORE-AFT/ HEADER TILT [440]	1	
2	220734	SUPPORT – ROCKER SWITCH-IN CAB MTG BRKT FOR FORE-AFT/ HEADER TILT SWITCH [441]	1	
3	304111	SUPPORT – TILT/DRAPER SPEED [441]	1	
4	304210	HARNESS – CAB DRAPER CONTROL [442]	1	
5	304211	HARNESS – CAB DRAPER EXTENSION [442]	1	
6	304216	KIT – CAB DRAPER CONTROL HARNESS [443]	A/R	–346189
7	220570	HARNESS – WIRING, CIGARETTE LIGHTER PLUG [444]	1	
8	109064	SWITCH – ROCKER, HEADER TILT/FORE-AFT [442]	1	
9	16661	FASTENER – NYLON TIE (BLACK)	12	

440. All combine models except CLAAS Lexion 500/700 Series and CNH/NH AFX, CX, and CR with integral switch.
441. John Deere 50 Series, S Series, and T Series only.
442. All combine models except CNH/NH AFX, CX, and CR with integral switch.
443. Kit is used to service model year 2018 and prior units with 2018 cab draper control harness (MD #213667). Includes cab draper control harness (MD #304210) and cab draper extension harness (MD #304211).
444. Optional on all combine models. Allows for install without hardwire.

119 Float Linkage and Components

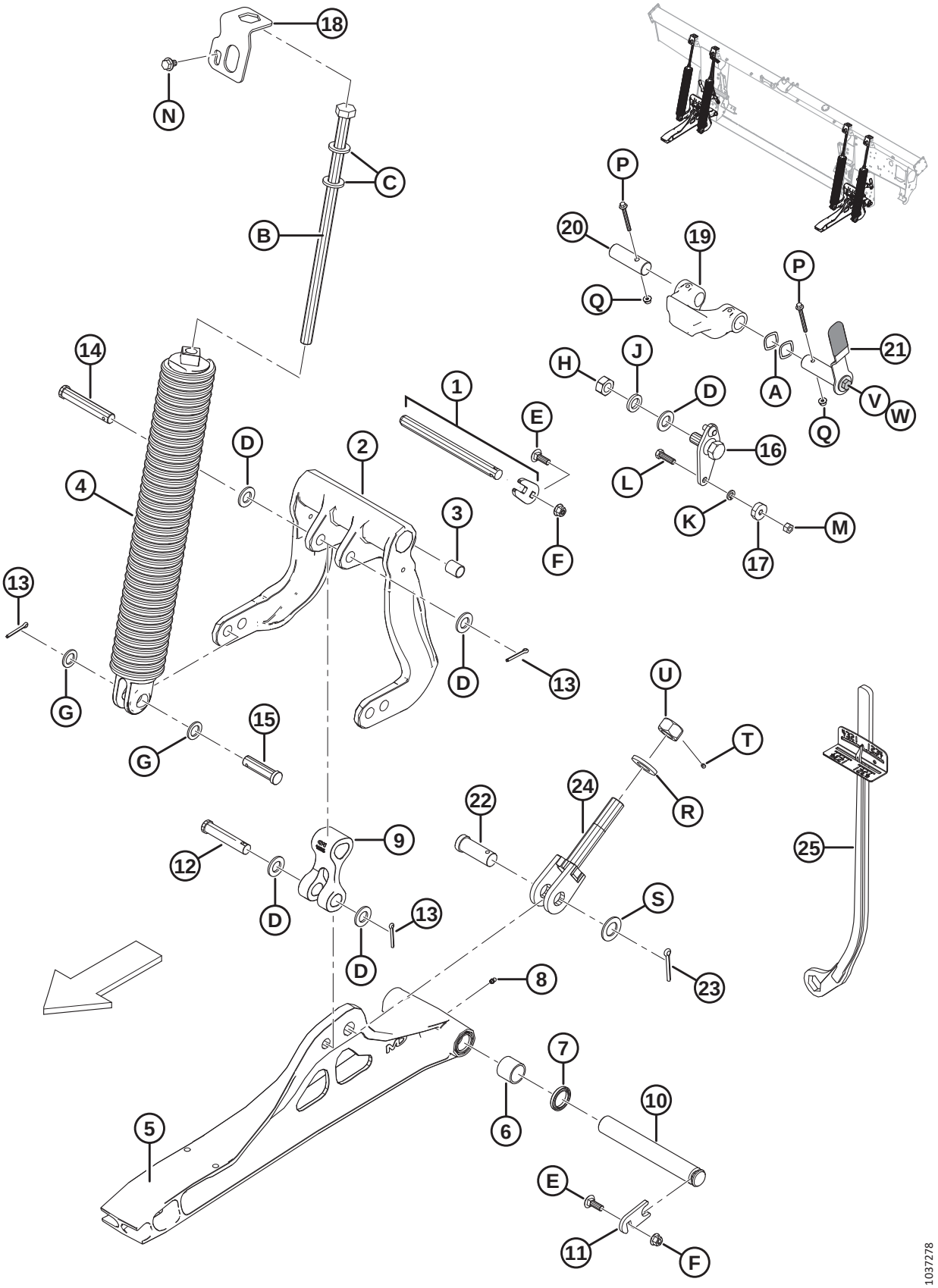

FLOAT LINKAGE AND COMPONENTS

Ref	Part Number	Description	Qty	Serial Number
1	335743	KIT – PIN PIVOT [445]	2	
2	156839	LEVER – BELLCRANK WITH BUSHINGS [446]	2	
3	156501	BUSHING – PLASTIC	4	
4	304034	SPRING ASSEMBLY [447]		
	304035	SPRING ASSEMBLY W/ INNER SPRING (HEAVY DUTY) [447]		
5	174816	LINK – LOWER, C/W BEARINGS [448]	2	
6	100500	BEARING – NEEDLE	4	
7	113222	SEAL	4	
8	18671	FITTING – LUBE 1/4-28 UNF	2	
9	156574	LINK – ARM	2	
10	248261	PIN	2	
11	212250	PLATE – PIN LOCK	2	
12	20312	PIN – CLEVIS	2	
13	18608	PIN – COTTER 3/16 DIA X 1.5 ZP	8	
14	156741	PIN – CLEVIS	2	
15	30463	PIN – CLEVIS	4	
16	125654	PIVOT – FLOAT WELDMENT	2	
17	18867	BEARING – BALL CYL OD C/W TWO SEALS	2	
18	213821	LOCK – SPRING	4	
19	301513	DOWNSTOP – CASTING, MACHINED	2	
20	240455	PIN – PIVOT	2	
21	322145	HANDLE ASSY – FLOAT LOCK [449]	2	
	287701	GRIP – HANDLE		
22	135995	PIN – CLEVIS	2	
23	18609	PIN – COTTER 1/4 DIA X 2 ZP	2	
24	220679	BOLT – WELDT	2	
25	311859	TOOL – WRENCH WELDMENT	1	
A	252564	WASHER – WAVE		
B	252198	BOLT – HEX HD M20 X 2.5 X 450 X SPCL-8.8-A3L		
C	21540	WASHER – HARDENED		
D	18601	WASHER – SAE FLAT 13/16 I.D. X 1.5 IN. O.D. ZP		
E	184662	BOLT – RHSN TFL M10 X 1.5 X 30-8.8-A3L		
F	135799	NUT – HEX FLG CTR LOC M10 X 1.5-10-A3L		
G	1709	WASHER – FLAT		
H	102636	NUT – HEX DT .750-10 UNC SIDE LOCK		
J	18640	WASHER – REG. LOCK 3/4 IN. NOM. I.D. ZP		
K	18637	WASHER – REG. LOCK 3/8 IN. NOM. I.D. ZP		

445. Kit includes plate and pivot pin.
446. Includes two plastic bushings (MD #156501).
447. There are four springs on each float module, but the combination of springs (MD #304034 and MD #304035) varies depending on header size. 40–45 foot headers require 3 x 304034 and 1 x 304035 on the outboard RHS, all smaller headers require 4 x 304034.
448. Includes two needle bearings (MD #100500), two seals (MD #113222), and lube fitting (MD #18671).
449. Includes handle grip (MD #287701), bolt (MD #30627), and washer (MD #184712).

FLOAT LINKAGE AND COMPONENTS

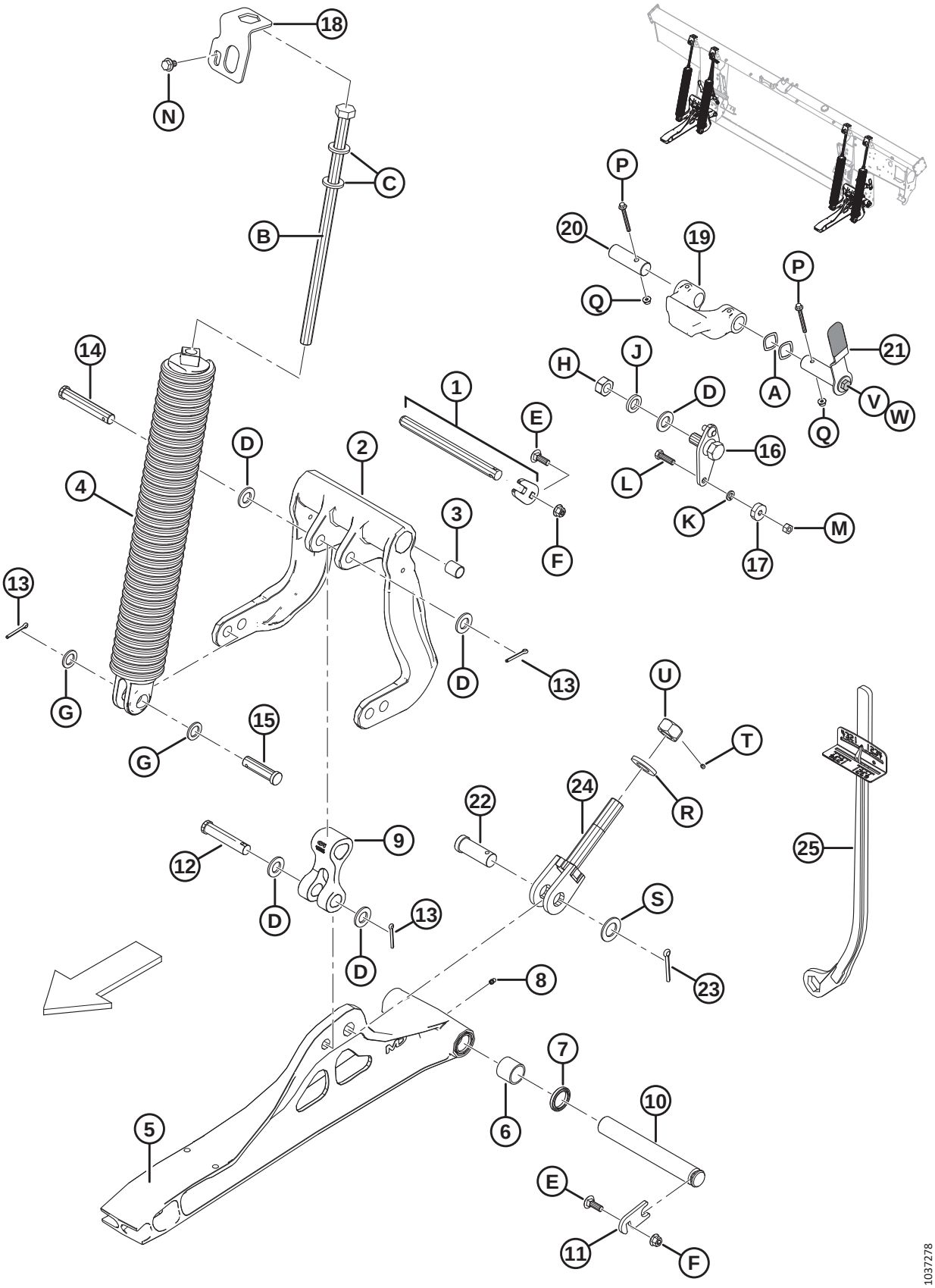

FLOAT LINKAGE AND COMPONENTS

Ref	Part Number	Description	Qty	Serial Number
L	21264	BOLT – HH 3/8 NC X 1.25 LG GR 5 ZP		
M	18669	NUT – HEX LK DT 3/8-16 UNC GR 5 AA1J		
N	136151	BOLT – HEX FLG HD TFL M10 X 1.5 X 16-8.8-A3L		
P	136704	BOLT – HEX FLG HD M6 X 1 X 60-8.8-AA2L		
Q	152668	NUT – HEX FLG CTR LOC M6 X 1-8-A2L		
R	31774	WASHER – FLAT		
S	156743	WASHER – FLAT		
T	136596	SCREW – SET, HEX NYL TIP 1/4-20 X 1/4-AS-ZNPL		
U	133047	NUT – DOWNSTOP MACHINING		
V	30627	BOLT – HEX HD TFL M10 X 1.5 X 25-8.8-A3L		
W	184712	WASHER – FLAT LARGE M10-200HV		

120 Float Indicator and Auto Header Height Control

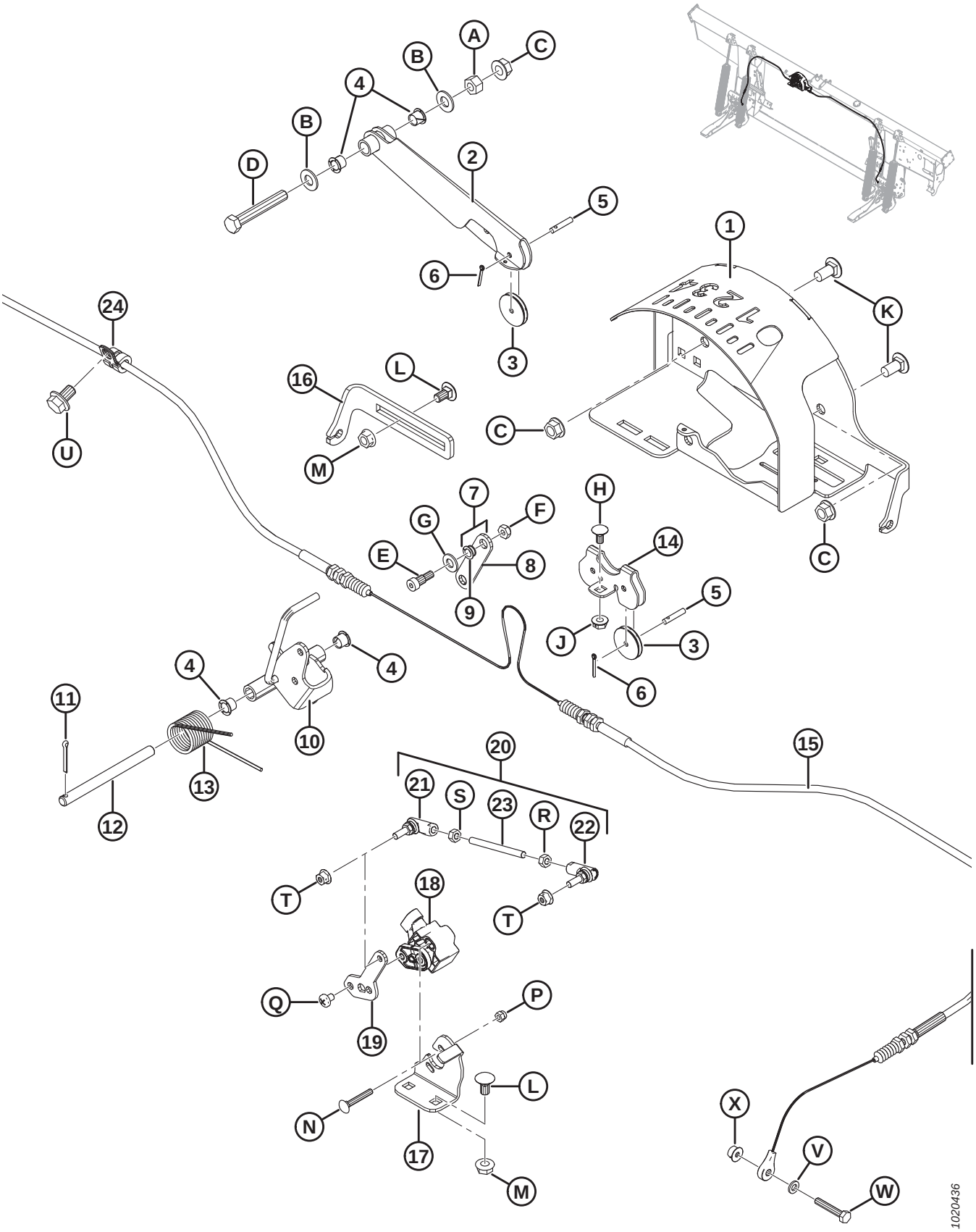

FLOAT INDICATOR AND AUTO HEADER HEIGHT CONTROL

Ref	Part Number	Description	Qty	Serial Number
1	187641	HOUSING – INDICATOR WELDT	1	
2	187655	ARM – INDICATOR WELDT	1	
3	187653	PULLEY – CONTROL	3	
4	276381	BUSHING – PLASTIC	4	
5	276863	PIN – STRAIGHT	3	
6	18604	PIN – COTTER 3/32 DIA X 3/4 ZP	3	
7	187694	LINK – INDICATOR CW BUSHINGS [450]	1	
8	187659	LINK – INDICATOR	1	
9	156969	BUSHING – PLASTIC	2	
10	304674	INDICATOR – POINTER ASSEMBLY	1	
11	18605	PIN – COTTER 1/8 DIA X 1 ZP	1	
12	276281	PIN – STRAIGHT	1	
13	156843	SPRING – TORSION	1	
14	187708	SUPPORT – INDICATOR PULLEYS	1	
15	187658	CABLE – FLOAT INDICATOR	1	
16	276298	SUPPORT – AHHC CABLE ADJUSTER	1	
17	276043	SUPPORT – SENSOR MOUNT	1	
18	248643	SENSOR – ROTARY, DUAL OUTPUT	1	
19	276044	ARM – SENSOR	1	
20	276057	LINKAGE ASSEMBLY [451]	1	
21	291485	BALL JOINT – LH THREAD	1	
22	291484	BALL JOINT – RH THREAD	1	
23	232650	ROD – THREADED	1	
24	136410	CLAMP – INSULATED 3/8 INCH	1	
A	18590	NUT – HEX 3/8-16 UNC GR 5 ZP		
B	18598	WASHER – SAE FLAT 13/32 I.D. X 13/16 IN. O.D. ZP		
C	30228	NUT – FLANGE DT SMTH FACE 0.375-16 UNC		
D	21102	BOLT – HH 3/8 NC X 2.5 LG GR 5 ZP		
E	135423	BOLT – SHOULDER 5/16 DIA X 3/8 X 1/4-20 UNRC		
F	18724	NUT – HEX LOCK DT 1/4-20 UNC ZP		
G	18597	WASHER – SAE FLAT 11/32 I.D. X 11/16 IN. O.D. ZP		
H	21926	BOLT – RHSN 1/4-20 X .5 GR 5 ZP		
J	135248	NUT – FLG SMTH FACE 1/4-20 NC GR 5 ZP CTR LK DT		
K	21863	BOLT – RHSSN 3/8 NC X 0.75 LG GR 5 ZP		
L	135305	BOLT – RHSN 5/16-18 X .63 GR 5 ZP		
M	30280	NUT – FLG SIDE LK SMTH FACE 5/16 NC GR 5 ZP		
N	197229	BOLT – RHSN M5 X 0.8 X 35-4.6-A2L		
P	197230	NUT – HEX NYLOC M5 X 0.8-8-A2L		
Q	158704	SCREW – PAN HD M6 X 1 X 8-4.8-A2L		
R	184683	NUT – HEX ISO 4032 M6 X 1-8-A2L		
S	136613	NUT – HEX LH ISO 4032 M6 X 1-8-A2L		

450. Includes link (MD #187659) and two bushings (MD #156969).
451. Includes ball joints (MD #291484, 291485), threaded rod (MD #232650), and hardware.

FLOAT INDICATOR AND AUTO HEADER HEIGHT CONTROL

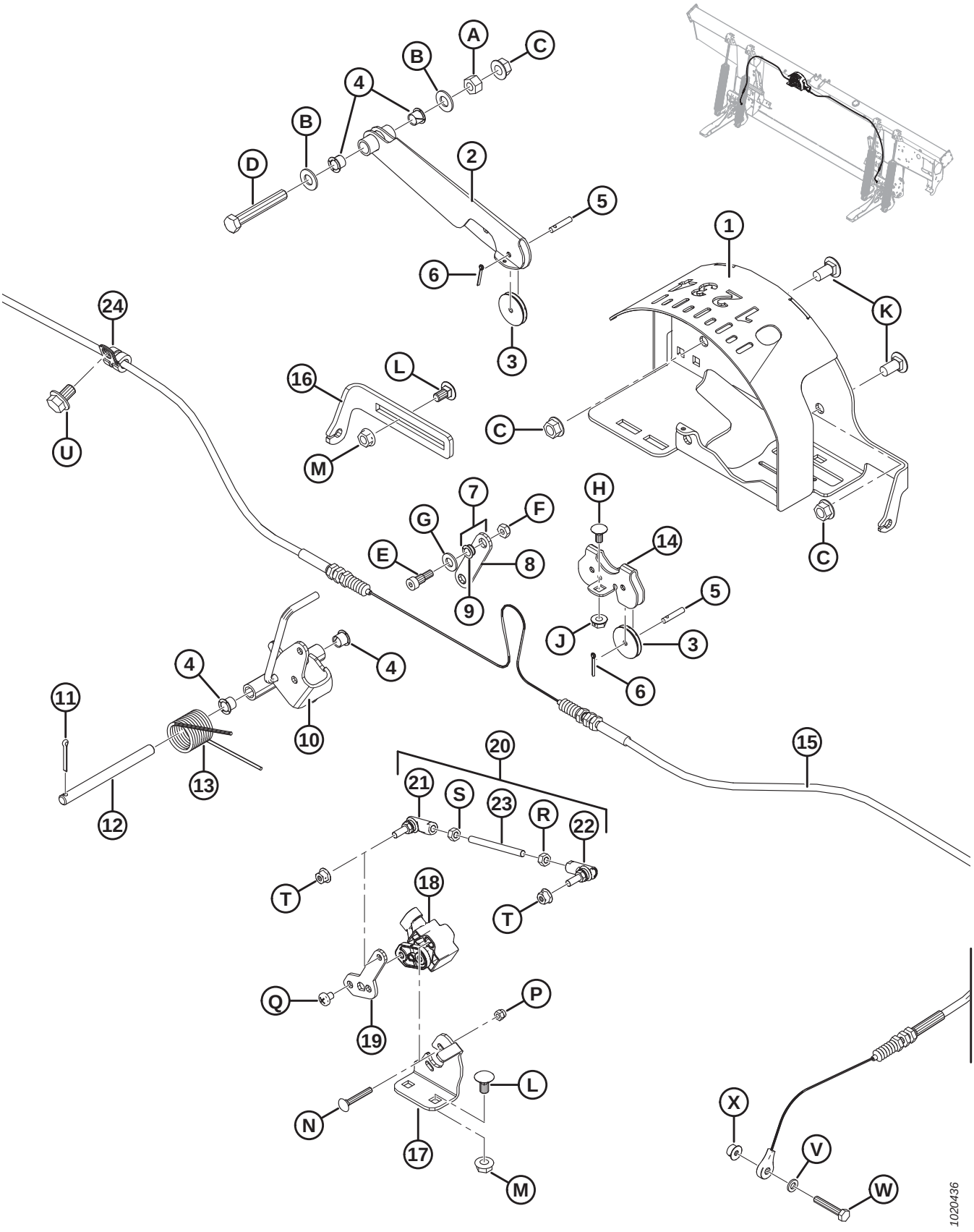

Ref	Part Number	Description	Qty	Serial Number
T	152668	NUT – HEX FLG CTR LOC M6 X 1-8-A2L		
U	136151	BOLT – HEX FLG HD TFL M10 X 1.5 X 16-8.8-A3L		
V	184705	WASHER – FLAT M6-200HV-A2L		
W	109613	BOLT – HEX HD TFL M6 X 1 X 35-8.8-A2L		
X	152668	NUT – HEX FLG CTR LOC M6 X 1-8-A2L		

121 Electrical Components – FM100

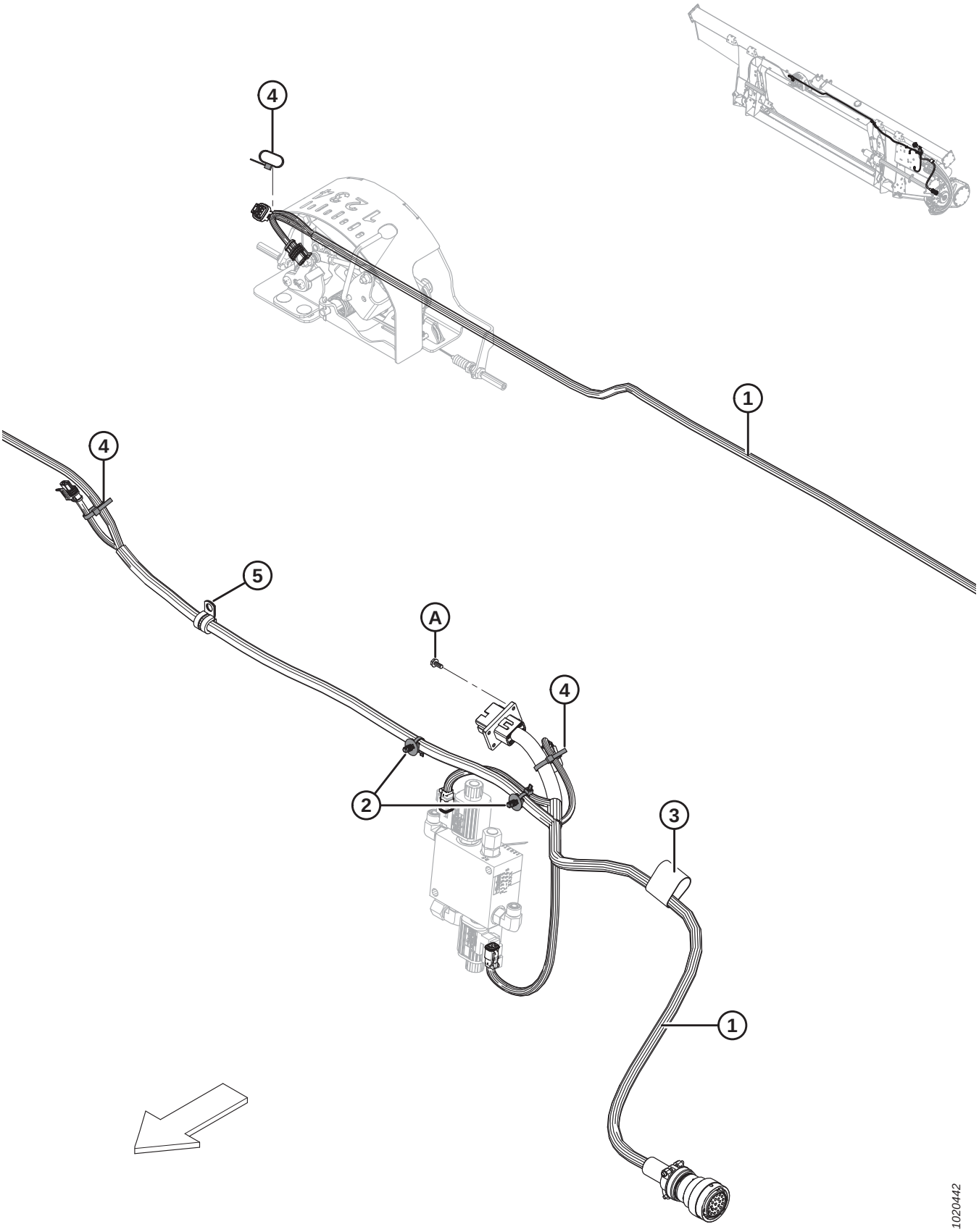

NOTE:

For specific electrical harness parts, refer to Electrical Connector Parts Catalog (MD #169641).

Ref	Part Number	Description	Qty	Serial Number
1	283613	HARNESS – FM100, MAIN	1	
	134746	CONNECTOR – CAP, PLUG, 12-WAY [452]		
2	136655	FASTENER – FIR TREE MT W/ TIE	2	
3	135443	FASTENER – CINCH STRAP 4 IN. LG	1	
4	21763	FASTENER – CABLE TIE (BLACK)	3	
5	135818	CLAMP – INSULATED 1/2 INCH	1	
A	42292	SCREW – SELF TAPPING HEX WASH HD #10 X 1/2 ZP		

452. Cap (MD #134746) is used to protect connector C1A for float modules that are not fully assembled.

122 Decals – FM100



1



2


3



4


5



6


7

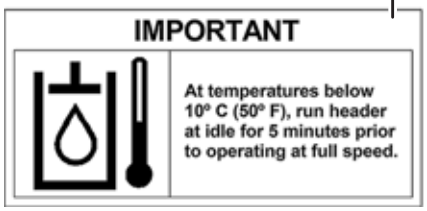

8



9

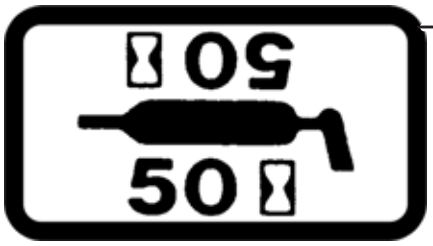

10

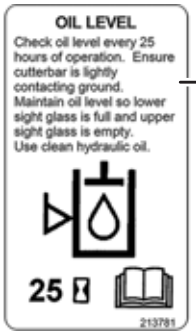

11

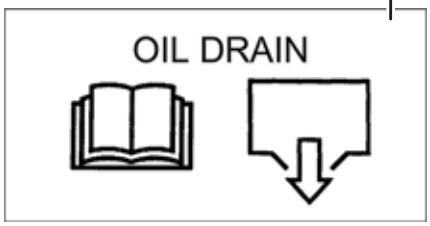

12

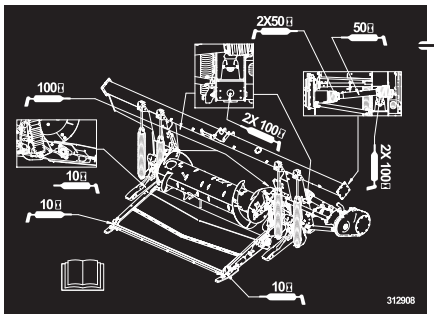

13


14

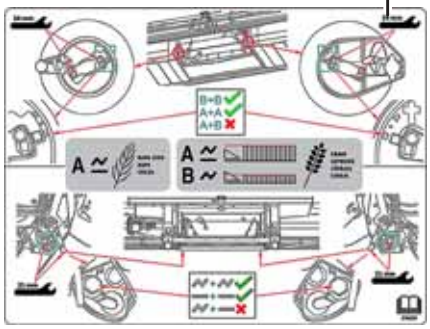
15

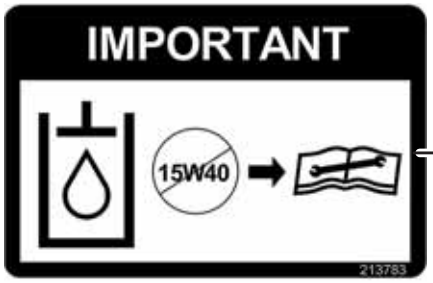

16


17


18

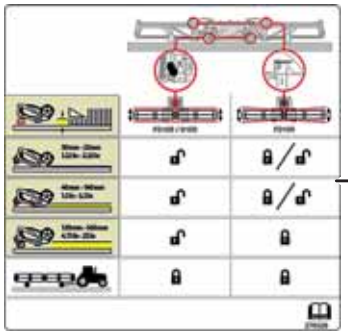
19

1037261

Ref	Part Number	Description	Qty	Serial Number
1	30316	DECAL – DANGER (ROTATING DRIVELINE)		
2	36651	DECAL – DANGER (DRIVELINE GUARD MISSING)		
3	165218	DECAL – WING LOCKOUT		
4	44611	DECAL – DANGER (HEADER HAZARD)		
5	174436	DECAL – HIGH PRESSURE FLUID		
6	302204	DECAL – CA PROPOSITION 65		
7	194521	DECAL – WARNING (DRIVELINE CE)		
8	133086	DECAL – IMPORTANT: OIL OPERATING TEMPERATURE		
9	32070	DECAL – PATENT NUMBER		
10	23165	DECAL – 50 HR LUBE		
	23163	DECAL – 10 HR LUBE		
11	213781	DECAL – ADAPTER OIL LEVEL		
12	133537	DECAL – ADAPTER OIL DRAIN		
13	312908	DECAL – GREASE, FM100		
14	287702	DECAL – FLOAT LOCK, LH		
	287705	DECAL – FLOAT LOCK, RH		
15	276259	DECAL – RTD SETTINGS		
16	213783	DECAL – OIL, IMPORTANT		
17	252996	DECAL – SAFETY FLUID SPRAY		
18	140225	STRIP – ANTI SLIP (LARGE)		
	174131	STRIP – ANTI SLIP (SMALL)		
19	276326	DECAL – HEADER ADJUSTMENT		

123 AGCO Challenger/Massey Ferguson – Float Module Completion

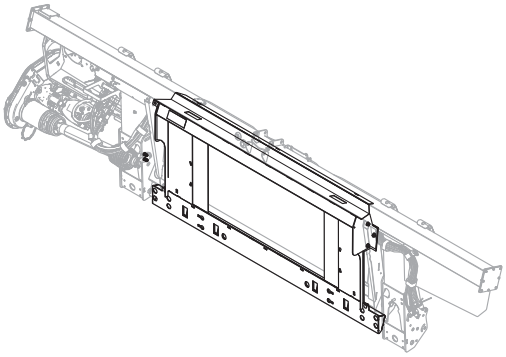

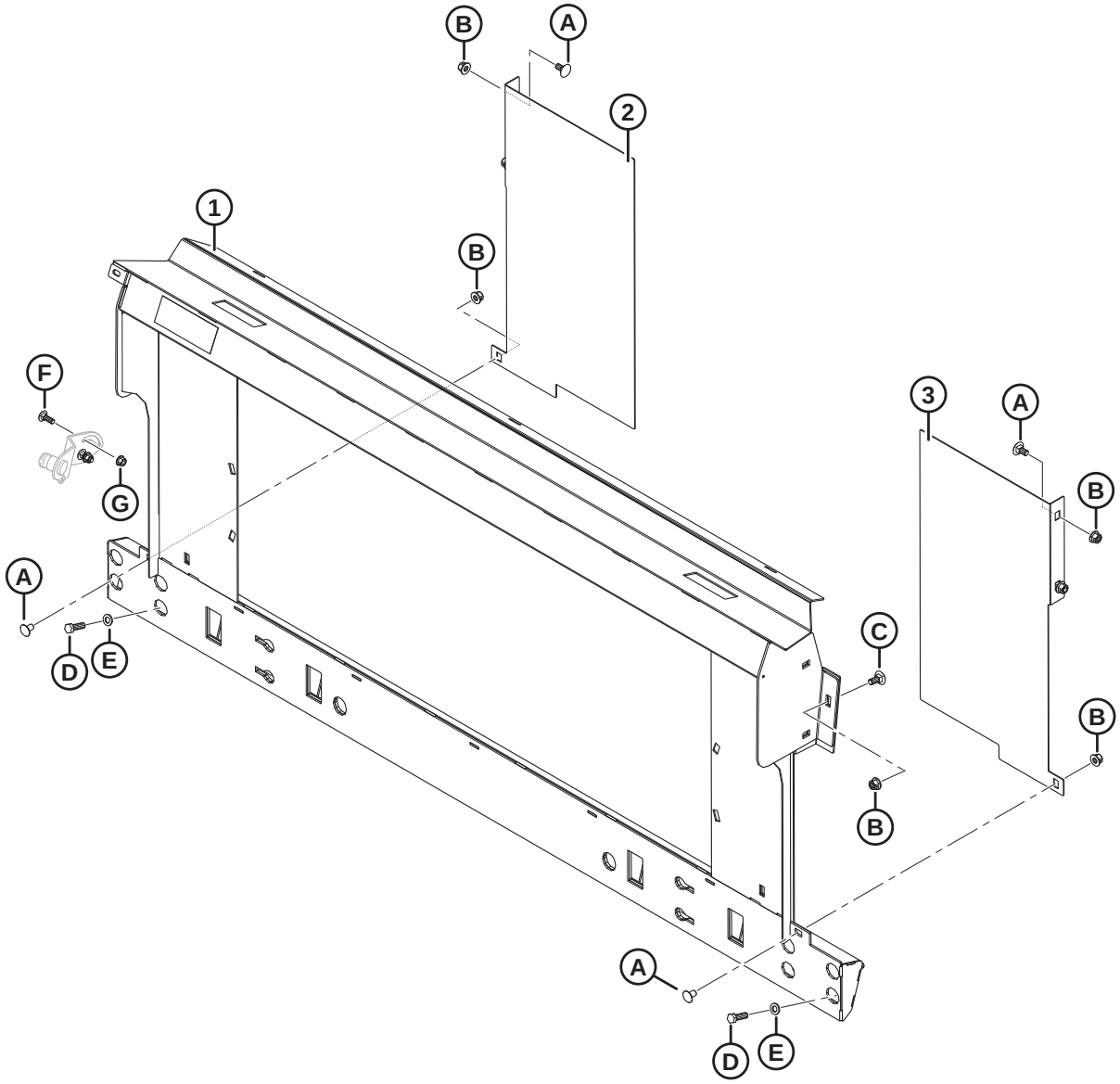

Ref	Part Number	Description	Qty	Serial Number
	B6965	**COMP PKG – AGCO, MASSEY CHALLENGER** [453]		
1	133672	FRAME – AGCO TRANSITION LATERAL TILT C/W DECAL	1	
2	133980	FILLER – LH, A65/660/9690	1	
3	133981	FILLER – RH, A65/660/9690	1	
A	136625	BOLT – HEX SER FLG HD M12 X 1.75 X 25 X SPCL-100-AA1J		
B	136431	NUT – HEX FLG CTR LOC M12 X 1.75-10-A3L		
C	184667	BOLT – RHSN M12 X 1.75 X 30-8.8-A3L		
D	152730	BOLT – HEX HD TFL M12 X 1.75 X 35-10.9-AA1J		
E	184714	WASHER – FLAT REG M12-300HV-A3L		
F	184662	BOLT – RHSN TFL M10 X 1.5 X 30-8.8-AA1J		
G	135799	NUT – HEX FLG CTR LOC M10 X 1.5-10		

453. AGCO Challenger/Massey Ferguson completion package includes float module, hydraulic, and electrical completion packages required to complete a stand-alone FM100 or to convert to an existing factory-installed FM100. Kits available through Whole Goods only.

124 AGCO Gleaner – Float Module Completion

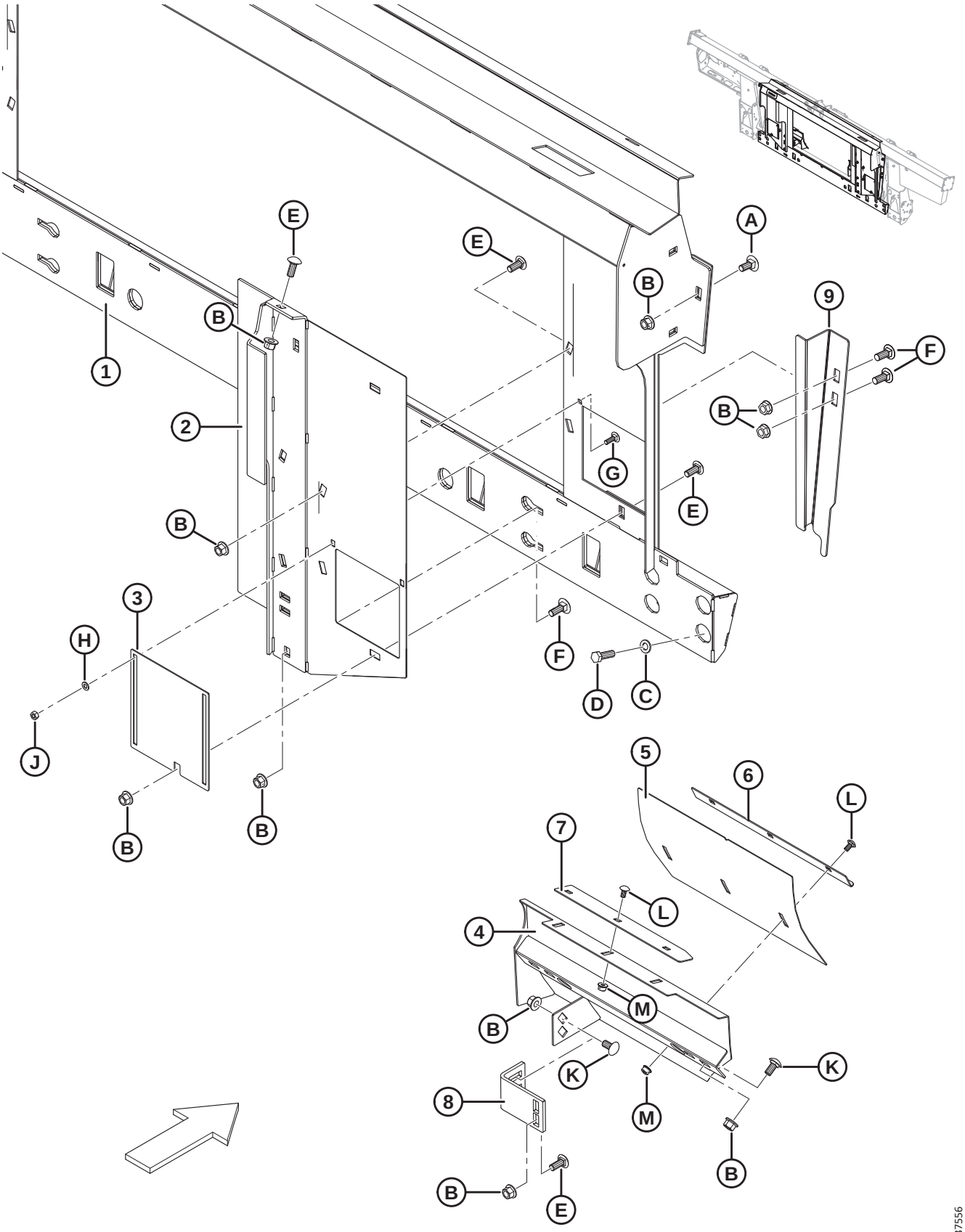

Ref	Part Number	Description	Qty	Serial Number
	B6964	**COMP PKG – AGCO, GLEANER** [454]		
1	245852	FRAME – GLEANER R/S C/W DECAL	1	
2	245816	FILLER – RH WELDMENT	1	
	245815	FILLER – LH WELDMENT	1	
3	245763	DOOR – ACCESS	2	
4	213834	DEFLECTOR – WELDT RH GLEANER	1	
	213833	DEFLECTOR – WELDT LH GLEANER	1	
5	213843	DEFLECTOR – ADJUSTING PANEL	2	
6	213844	ANGLE – STRIPPER	2	
7	213845	STRIPPER	2	
8	276289	FILLER BRACKET	2	
9	337943	FILLER – BRACKET RH	1	
	337941	FILLER – BRACKET LH	1	
A	184667	BOLT – RHSN M12 X 1.75 X 30-8.8-A3L		
B	50186	NUT – FLG LK SM FACE DT 1/2-13 UNC-GR5-AA1J		
C	184714	WASHER – FLAT REG M12-300HV-A3L		
D	152730	BOLT – HEX HD TFL M12 X 1.75 X 35-10.9-AA1J		
E	21868	BOLT – RHSSN 1/2-13 X 1.0 GR5 AA1J		
F	21471	BOLT – RHSN 1/2-13 X 1.25 GR5 AA1J		
G	21282	BOLT – RHSN 5/16-18 X 1-GR5-AA1J		
H	184572	WASHER – USS FLAT 1/4 IN. NOM		
J	18589	NUT – HEX 5/16-18 UNC GR 5 ZP		
K	152439	BOLT – RHSSN M12 X 1.75 X 25-8.8-A3L		
L	191489	BOLT – RHSSN TFL M8 X 1.25 X 16-8.8-A2L		
M	135337	NUT – HEX FLG CTR LOC M8 X 1.25-8-A2L		

454. AGCO Gleaner Completion Package includes float module, feed auger, hydraulic, and electrical completion packages required to complete a stand-alone FM100 or to convert to an existing factory-installed FM100. Kits available through Whole Goods only.

125 AGCO Gleaner – Feed Auger Conversion Parts

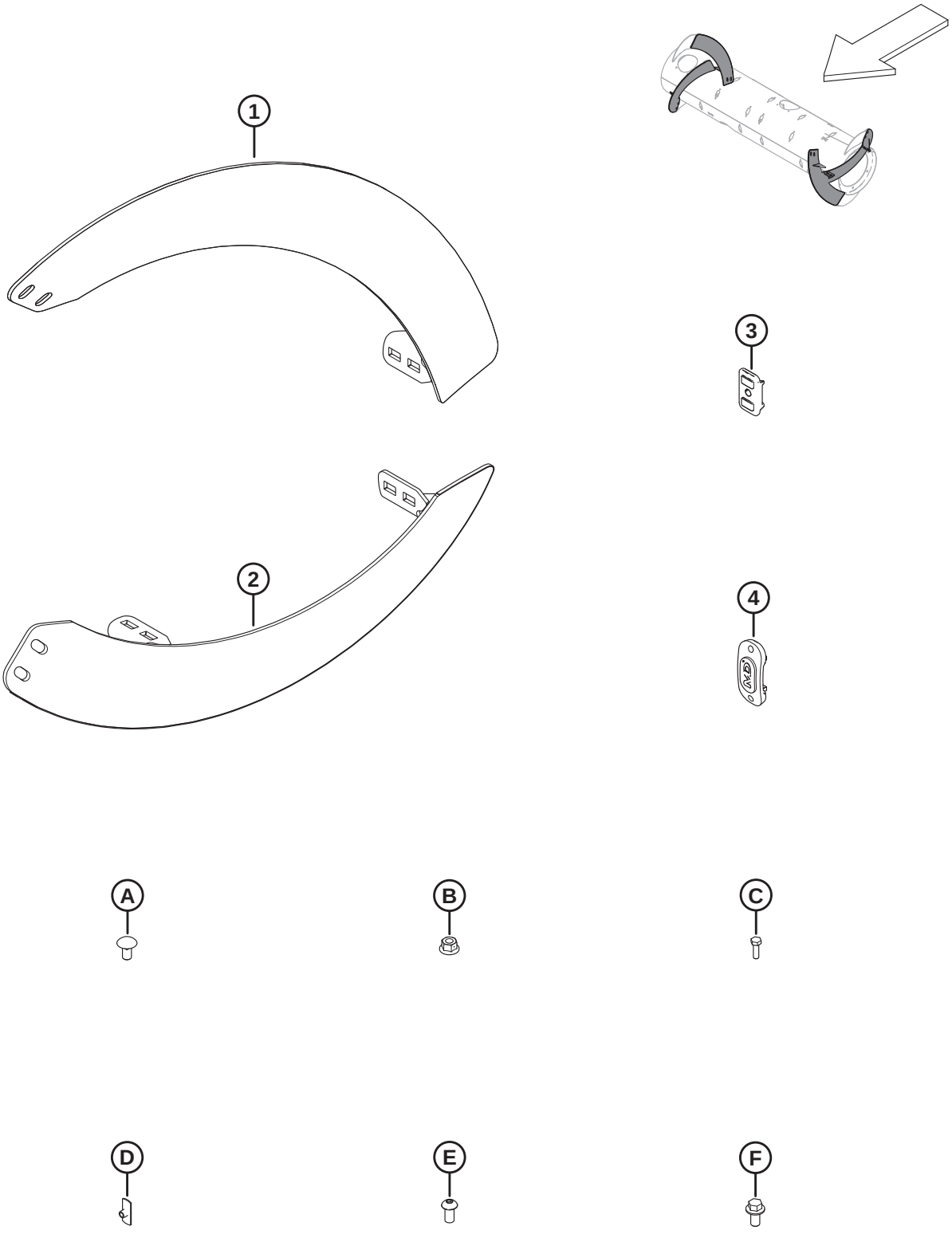

NOTE:

Feed auger parts and hardware listed here are included in AGCO Gleaner Completion Package (MD #B6675), refer to Section *124 AGCO Gleaner – Float Module Completion, page 375*.

Ref	Part Number	Description	Qty	Serial Number
1	287890	FLIGHTING, RTD – RH, LONG (HIWEAR)	4	
2	287889	FLIGHTING, RTD – LH, LONG (HIWEAR)	4	
3	213084	PLUG – FLIGHTING SLOT	8	
4	187137	PLUG	12	
A	136178	BOLT – RHSN M10 X 1.5 X 20-8.8-A3L		
B	135799	NUT – HEX FLG CTR LOC M10 X 1.5-10-A3L		
C	252703	BOLT – HEX HD TFL M6 X 1 X 20 X SPCL-12.9-AA2L		
D	197263	NUT – TEE M6 X 1		
E	135723	SCREW – HEX SOC BTN HD M10 X 1.5 X 20-10.9-A3L		
F	152655	BOLT – HEX FLG HD M10 X 1.5 X 20-8.8-A3L		

126 AGCO IDEAL™ – Float Module Completion

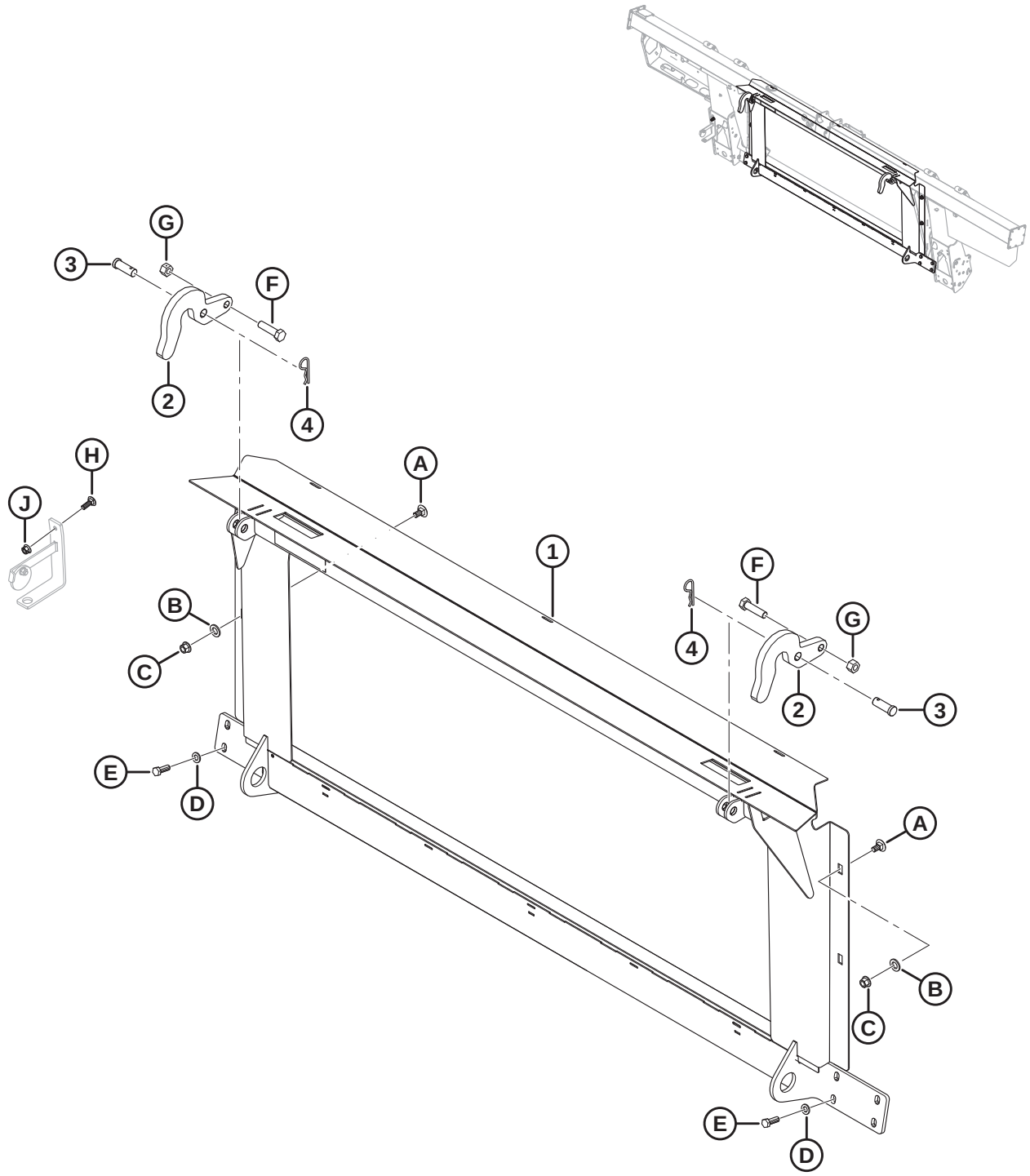

Ref	Part Number	Description	Qty	Serial Number
	B6966	**COMP PKG – AGCO, IDEAL 7/8/9 COMBINE** [455]		
1	314678	FRAME – IDEAL TRANSITION W/ DECAL	1	
2	301451	SUPPORT – HOOK	2	
3	158080	PIN – CLEVIS	2	
4	13125	PIN – HAIR	2	
A	135903	BOLT – RHSN M12 X 1.75 X 25-8.8-AA1J		
B	184717	WASHER – FLAT REG M16-200HV-AA1J		
C	136431	NUT – HEX FLG CTR LOC M12 X 1.75-10		
D	184714	WASHER – FLAT REG M12-300HV		
E	152730	BOLT – HEX HD TFL M12 X 1.75 X 35-10.9-AA1J		
F	136141	BOLT – HEX HD M16 X 2 X 60-8.8-AA1J		
G	136476	NUT – HEX CTR LOC M16 X 2-8		
H	184662	BOLT – RHSN TFL M10 X 1.5 X 30-8.8-AA1J		
J	135799	NUT – HEX FLG CTR LOC M10 X 1.5-10		

455. AGCO IDEAL™ completion package includes float module, hydraulic, and electrical completion packages required to complete a stand-alone FM100 or to convert an existing factory-installed FM100. Kits available through Whole Goods only.

127 AGCO Challenger/Massey Ferguson and Gleaner – Hydraulic Completion

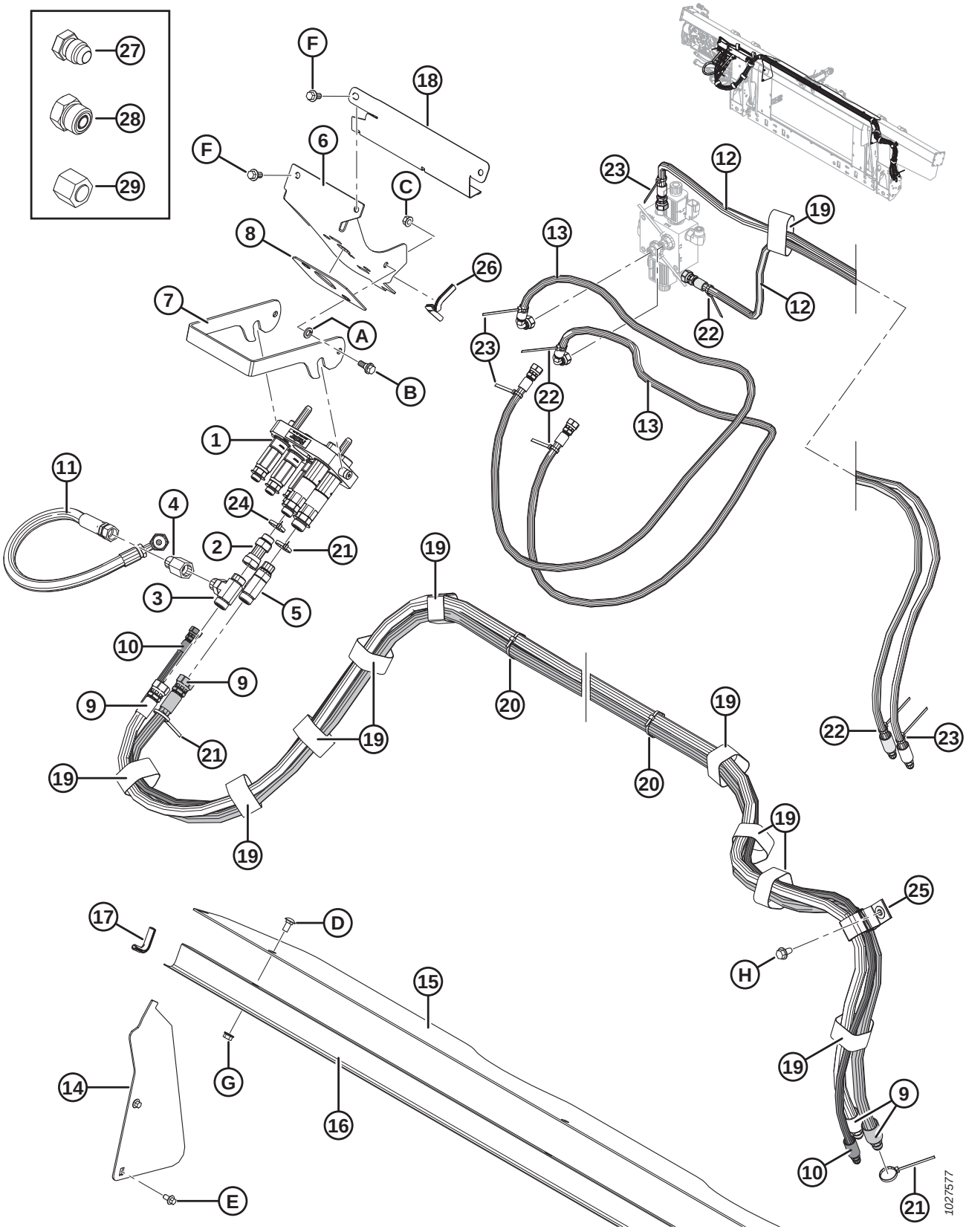

NOTE:

Some completion packages may have been shipped with a Parker multicoupler (not sold separately). Service parts for Parker multicouplers include AGCO coupler plate (MD #304405), two 1/2 inch female couplers (MD #184460), three 3/8 inch couplers (MD #191704), 1/2 inch seal kit (MD #129860), 3/8 inch seal kit (MD #129859), three adapter fittings (MD #191705), five retaining rings (MD #184603), two bushings (MD #182181), and two screws (MD #184524). Parker multicoupler service parts are **NOT** interchangeable with Faster multicoupler (MD #279737) service parts. To replace an entire Parker multicoupler, order Faster multicoupler (MD #279737).

Ref	Part Number	Description	Qty	Serial Number
1	279737	COUPLING – MULTI AGCO (FASTER)	1	
	294098	KIT – COUPLER PLATE ASSY, AGCO (FASTER) [456]		
	279011	KIT – COUPLER, 3/8 C/W 3/8 IN. FITTING (FASTER) [456]		
	279012	KIT – COUPLER, 9/16 C/W 5/8 IN. FITTING (FASTER) [456]		
	279013	KIT – COUPLER, 9/16 C/W 1/2 IN. FITTING (FASTER) [456]		
	279034	SEAL – 3/8 COUPLER (FASTER) [456]		
	279035	SEAL – 9/16 COUPLER (FASTER) [456]		
2	252650	FITTING – ADAPTER HYD	1	
	44210	O-RING – #10 ORB		
3	136181	FITTING – BRANCH TEE HYD	1	
	44210	O-RING – #10 ORB		
	135867	O-RING – #10 ORFS		
4	187031	VALVE – CHECK	1	
5	135598	FITTING – TEE HYD STR THD RUN TEE CW O-RING	1	
	44210	O-RING – #10 ORB		
	135867	O-RING – #10 ORFS		
6	213281	BRACKET – AGCO COUPLER	1	
7	248960	LATCH – COUPLER BRACKET	1	
8	187018	PAD – RUBBER	1	
9	287879	HOSE – HYD, REEL DRIVE (AGCO)	2	
10	287863	HOSE – HYD, REEL POS (AGCO)	1	
11	287878	HOSE – HYD, REEL BYPASS	1	
12	287861	HOSE – HYD, REEL FORE-AFT (AGCO)	2	
13	287862	HOSE – HYD, REEL FORE-AFT (AGCO)	2	
14	276284	COVER – FEED AUGER, SIDE	2	
15	276285	COVER – FEED AUGER, TOP	1	
16	156725	COVER – HOSE	1	
17	42589	MOULDING	2	
18	213965	COVER – HOSE	1	
19	135444	FASTENER – CINCH STRAP 6 IN. LG	11	
20	21763	FASTENER – CABLE TIE (BLACK)	4	
21	40701	FASTENER – CABLE TIE (YELLOW)	3	
22	40702	FASTENER – CABLE TIE (RED)	4	
23	49227	FASTENER – CABLE TIE (GREEN)	4	

456. Service part for Faster multicoupler (MD #279737) only. **NOT** interchangeable with Parker multicoupler (not sold separately) service parts.

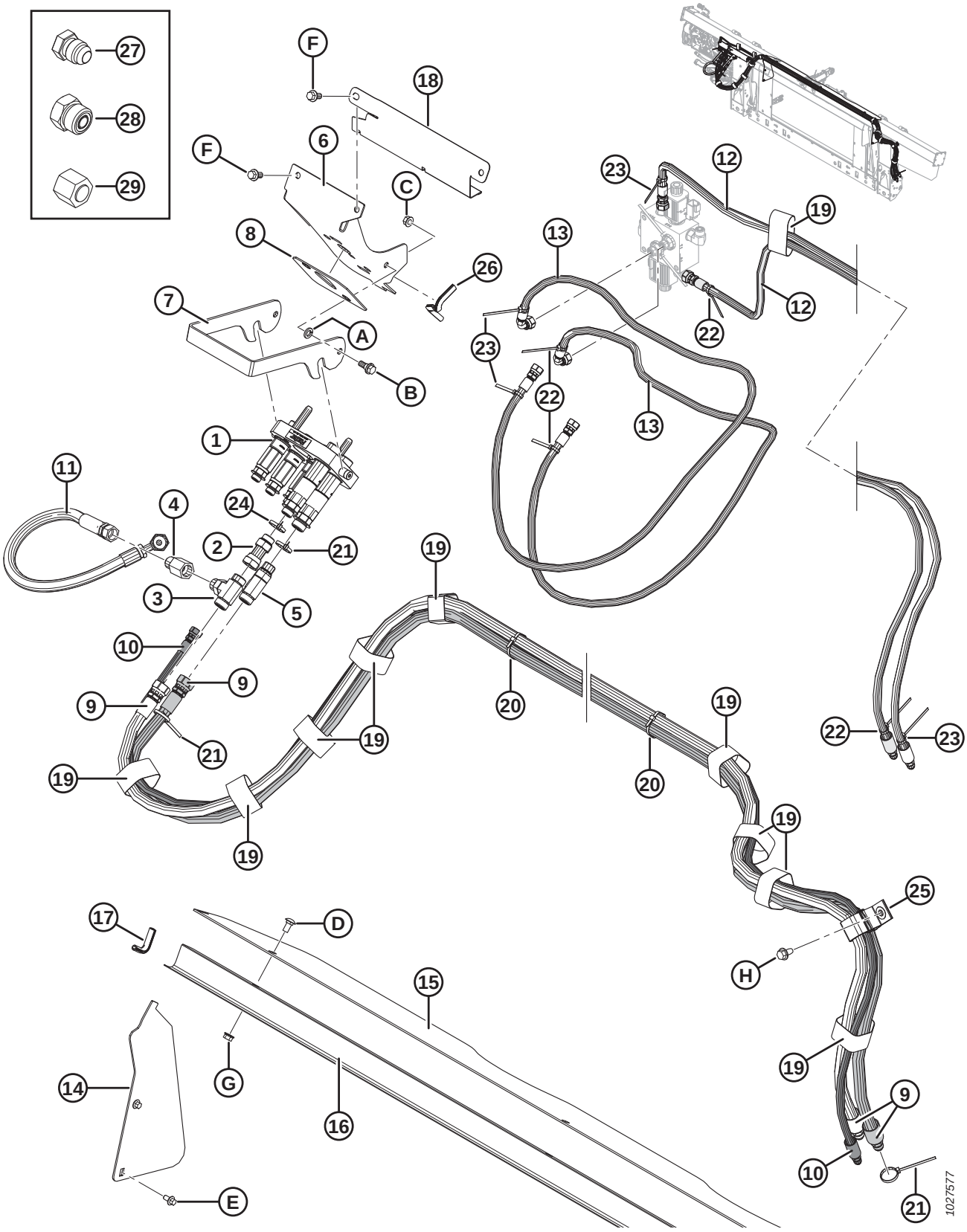
27
28
29
F
18
F
6
C
8
26
7
A
B
1
11
4
24
2
21
3
5
10
9
9
21
19
19
19
19
19
20
20
19
19
22
23
12
23
19
13
12
22
23
22
13
17
D
15
H
25
14
G
16
19
9
10
21
E
1027577

Ref	Part Number	Description	Qty	Serial Number
24	49232	FASTENER – CABLE TIE (WHITE)	1	
25	163598	STRAP – VELCRO, HANGING	1	
26	42074	MOULDING	1	
27	50178	PLUG – 3/8 IN. TUBE (FOR SHIPPING ONLY)	4	
28	136326	PLUG – HYD SAE-6 ORFS (FOR SHIPPING ONLY)	7	
	136266	PLUG – HYD SAE-10 ORFS (FOR SHIPPING ONLY)	2	
29	136325	CAP – HYD SAE-6 ORFS (FOR SHIPPING ONLY)	3	
	135860	CAP – HYD SAE-10 ORFS (FOR SHIPPING ONLY)	2	
A	18652	WASHER – REG. LOCK 7/16 IN. NOM. I.D. ZP		
B	27647	BOLT – SHOULDER		
C	30228	NUT – FLANGE DT SMTH FACE 0.375-16 UNC		
D	184657	BOLT – RHSSN M10 X 1.5 X 20-8.8-A3L		
E	136485	BOLT – HEX FLG HD TFL M8 X 1.25 X 16-8.8-A3L		
F	152655	BOLT – HEX FLG HD M10 X 1.5 X 20-8.8-A3L		
G	135799	NUT – HEX FLG CTR LOC M10 X 1.5-10-A3L		
H	136209	SCREW – HEX WASHER HD M10 X 1.5 X 20-450HV-A3L		

128 AGCO IDEAL™ – Hydraulic Completion

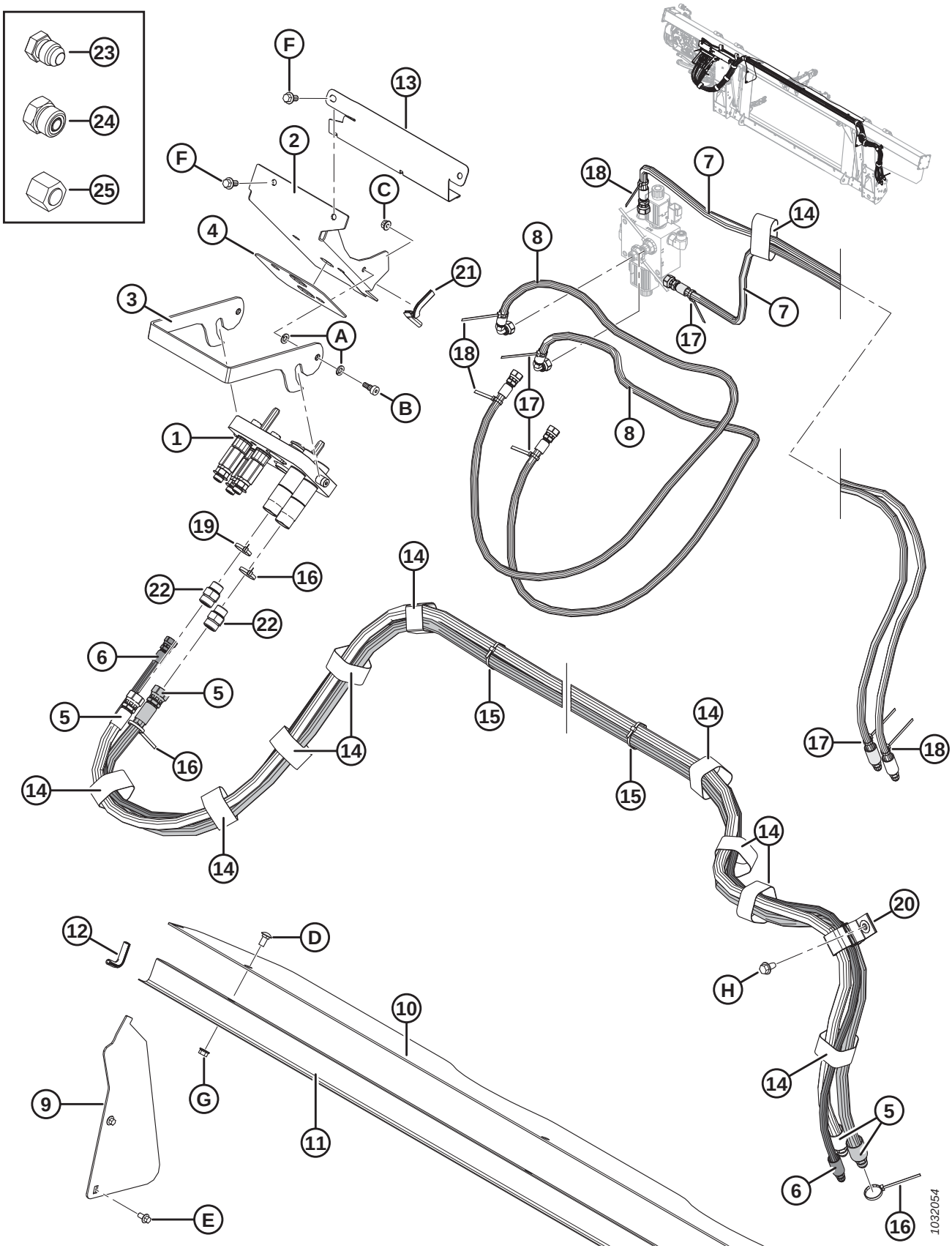

Ref	Part Number	Description	Qty	Serial Number
1	335008	COUPLING – MULTI, AGCO, 5-POS	1	
	294394	KIT – COUPLER PLATE ASSY, AGCO		
	279011	KIT – COUPLER, 3/8 C/W 3/8 IN. FITTING		
	279012	KIT – COUPLER, 9/16 C/W 5/8 IN. FITTING		
	279013	KIT – COUPLER, 9/16 C/W 1/2 IN. FITTING		
	279034	SEAL – 3/8 COUPLER		
	279035	SEAL – 9/16 COUPLER		
2	335059	BRACKET – IDEAL COUPLER	1	
3	337980	LATCH – MULTICOUPLER	1	
4	302030	PAD – RUBBER	1	
5	287879	HOSE – HYD, REEL DRIVE (AGCO)	2	
6	287863	HOSE – HYD, REEL POS (AGCO)	1	
7	287861	HOSE – HYD, REEL FORE-AFT (AGCO)	2	
8	287862	HOSE – HYD, REEL FORE-AFT (AGCO)	2	
9	276284	COVER – FEED AUGER, SIDE	2	
10	276285	COVER – FEED AUGER, TOP	1	
11	156725	COVER – HOSE	1	
12	42589	MOULDING	2	
13	213965	COVER – HOSE	1	
14	135444	FASTENER – CINCH STRAP 6 IN. LG	11	
15	21763	FASTENER – CABLE TIE (BLACK)	4	
16	40701	FASTENER – CABLE TIE (YELLOW)	3	
17	40702	FASTENER – CABLE TIE (RED)	4	
18	49227	FASTENER – CABLE TIE (GREEN)	4	
19	49232	FASTENER – CABLE TIE (WHITE)	1	
20	163598	STRAP – VELCRO, HANGING	1	
21	42074	MOULDING	1	
22	184461	FITTING – ADAPTER HYD	1	
	44210	O-RING – #10 ORB		
	135867	O-RING – #10 ORFS		
23	50178	PLUG – 3/8 IN. TUBE (FOR SHIPPING ONLY)	4	
24	136326	PLUG – HYD SAE-6 ORFS (FOR SHIPPING ONLY)	7	
	136266	PLUG – HYD SAE-10 ORFS (FOR SHIPPING ONLY)	2	
25	136325	CAP – HYD SAE-6 ORFS (FOR SHIPPING ONLY)	3	
	135860	CAP – HYD SAE-10 ORFS (FOR SHIPPING ONLY)	2	
A	30632	WASHER – LOCK SPRING M10		
B	135894	SCREW – HEX SOC HD SHLDR M10		
C	135337	NUT – HEX FLG CTR LOC M8 X 1.25-8-AA1J		
D	184657	BOLT – RHSSN M10 X 1.5 X 20-8.8-A3L		
E	136485	BOLT – HEX FLG HD TFL M8 X 1.25 X 16-8.8-A3L		
F	152655	BOLT – HEX FLG HD M10 X 1.5 X 20-8.8-A3L		

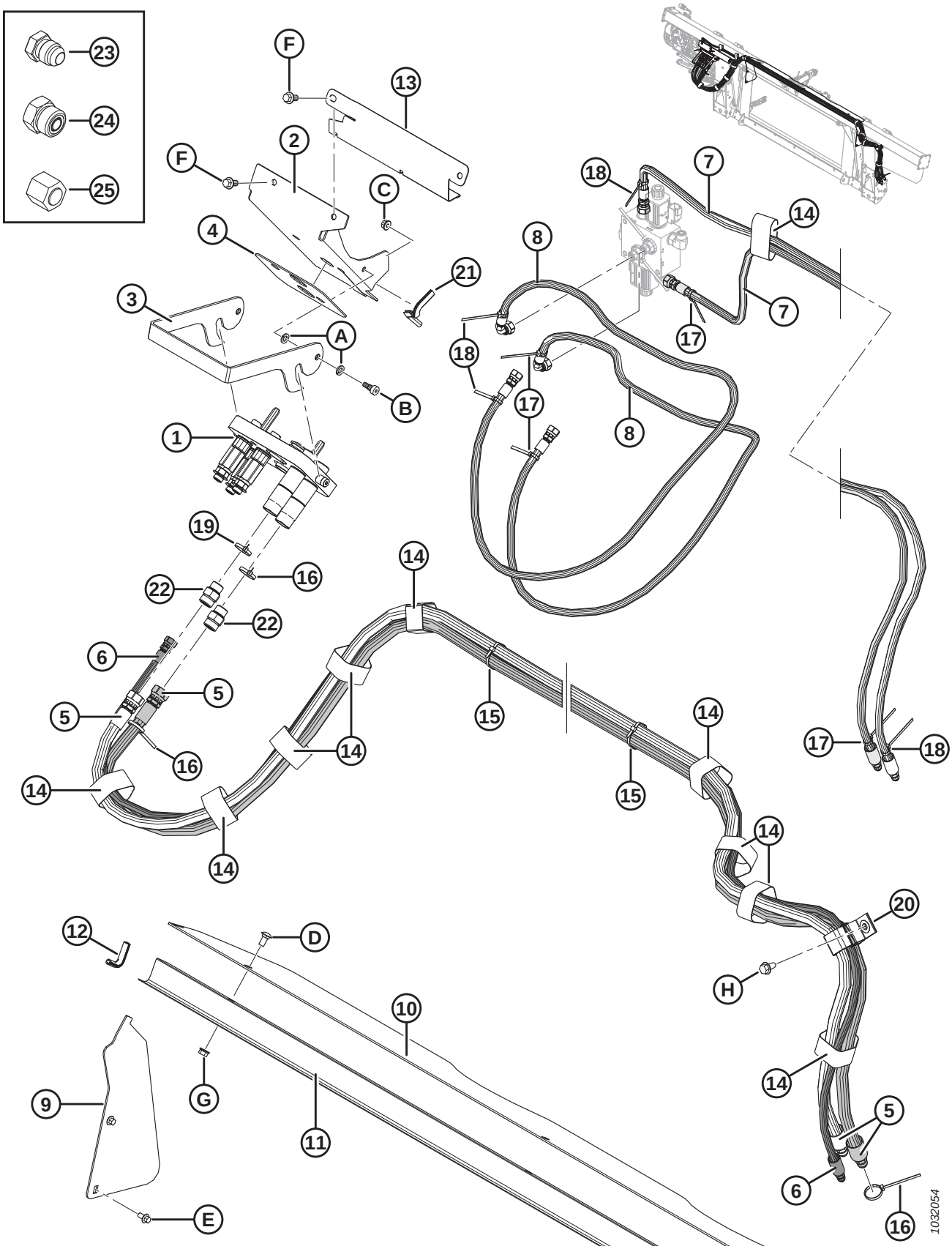
23
24
25
F
13
2
F
C
4
21
3
A
B
1
19
16
22
22
6
5
5
16
14
14
14
14
15
14
15
14
14
20
H
14
5
6
16
17
18
7
14
8
7
17
18
17
8
12
D
10
9
G
11
E
1032054

Ref	Part Number	Description	Qty	Serial Number
G	135799	NUT – HEX FLG CTR LOC M10 X 1.5-10-A3L		
H	136209	SCREW – HEX WASHER HD M10 X 1.5 X 20-450HV-A3L		

129 AGCO – Electrical Completion

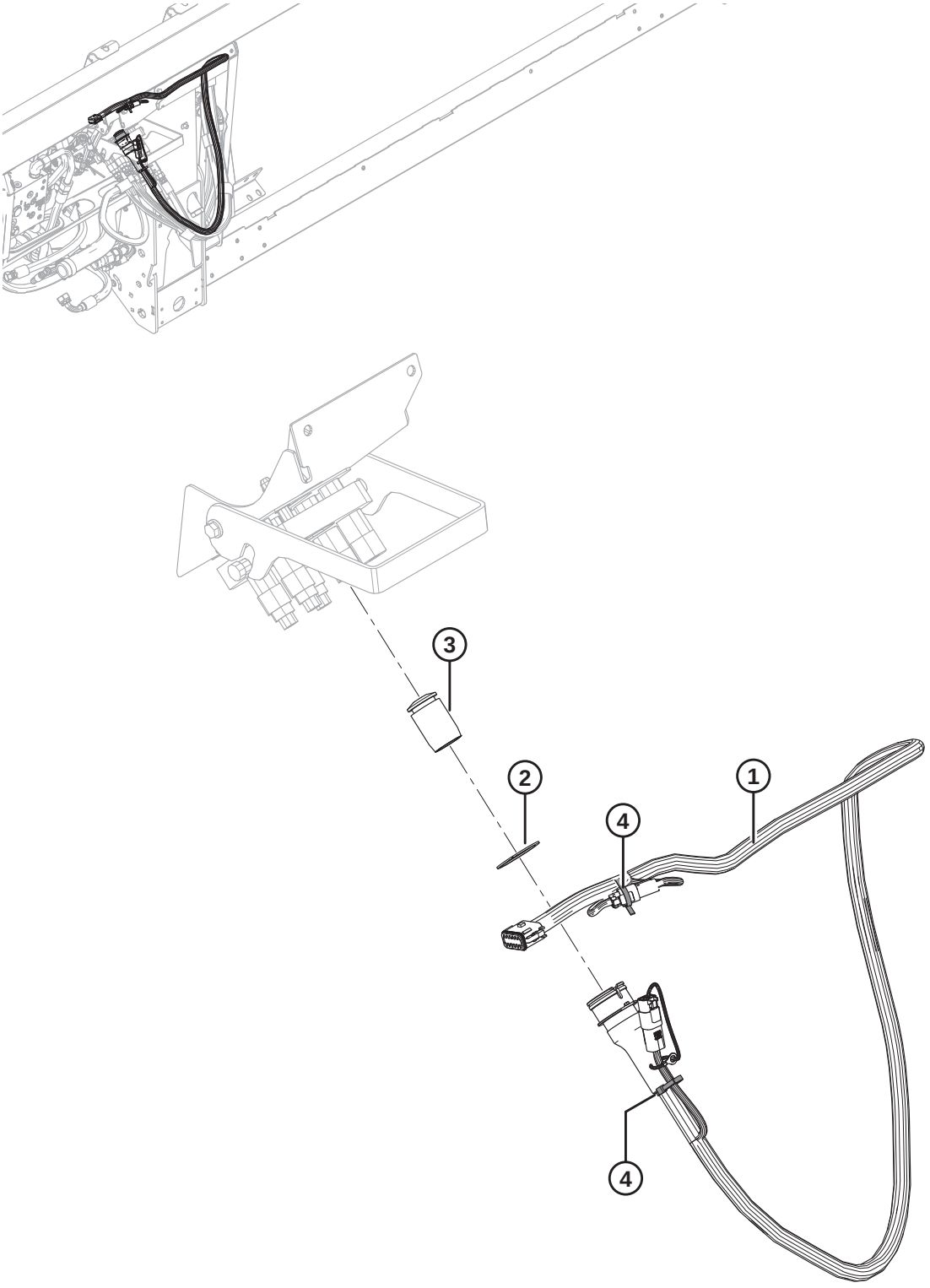

1020682

NOTE:

For specific electrical harness parts, refer to Electrical Connector Parts Catalog (MD #169641).

Ref	Part Number	Description	Qty	Serial Number
1	304576	HARNESS – FM100, COMPLETION, AGCO [457]	1	
	311707	HARNESS – FM100, COMPLETION, IDEAL [458]	1	
	134746	CONNECTOR – CAP, PLUG, 12-WAY	1	
2	135267	RING – INVERTED EXT RETAINING	1	
3	129148	PLUG – RUBBER	1	
4	21763	FASTENER – CABLE TIE (BLACK)	2	

457. Challenger/Massey Ferguson and Gleaner only.
458. IDEAL™ Series only.

130 Case IH and New Holland CR/CX – Float Module Completion

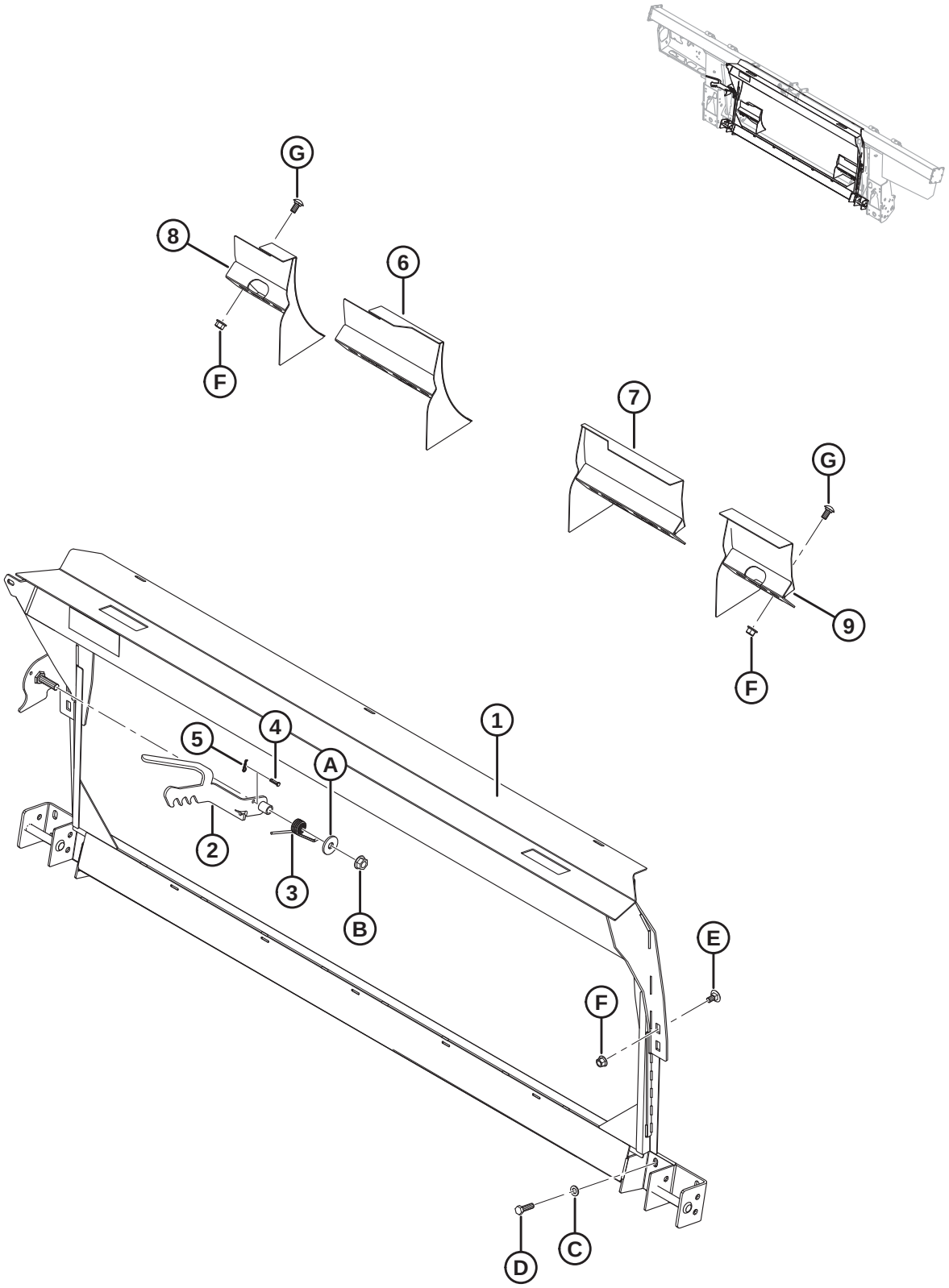

Ref	Part Number	Description	Qty	Serial Number
	B6959	**COMP PKG – CASE IH, NEW HOLLAND CR/CX** [459]		
1	279493	FRAME – TRANSITION, CNH	1	
2	187006	WELDT – LATCH	1	
3	156948	SPRING – TORSION	1	
4	135655	PIN – CLEVIS	1	
5	252993	PIN – HAIR (1.6 MM, 33.3 MM)	1	
6	213592	DEFLECTOR WELDT – NH CR NARROW ONLY (LH)	1	
7	213593	DEFLECTOR WELDT – NH CR NARROW ONLY (RH)	1	
8	213614	DEFLECTOR WELDT – NH CR WIDE ONLY (LH, SHORT)	1	
9	213613	DEFLECTOR WELDT – NH CR WIDE ONLY (RH, SHORT)	1	
A	23745	WASHER – FLAT		
B	50225	NUT – FLANGE DT SMTH FACE .625-11 UNC		
C	184714	WASHER – FLAT REG M12-300HV-A3L		
D	184669	BOLT – HEX HD M12 X 1.75 X 40-8.8-A3L		
E	136625	BOLT – HEX SER FLG HD M12 X 1.75 X 25 X SPCL-100-AA1J		
F	136431	NUT – HEX FLG CTR LOC M12 X 1.75-10-A3L		
G	152439	BOLT – RHSSN M12 X 1.75 X 25-8.8-A3L		

459. Case IH, New Holland CR/CX Completion Package includes float module, hydraulic, and electrical completion packages required to complete a stand-alone FM100 or to convert to an existing factory-installed FM100. Kits available through Whole Goods only.

131 Case IH 2300/2500 Series – Float Module Completion

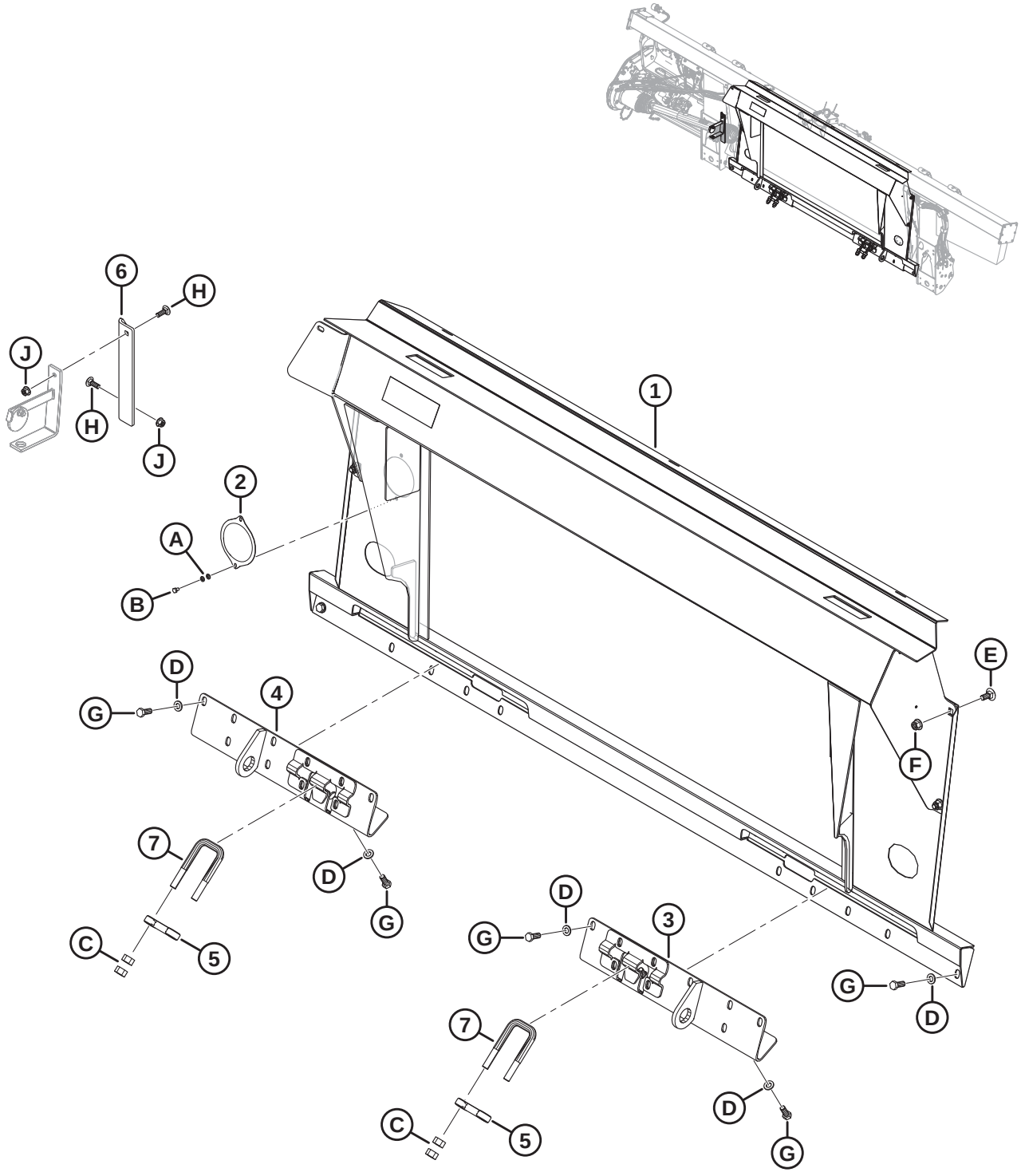

CASE IH 2300/2500 SERIES – FLOAT MODULE COMPLETION

Ref	Part Number	Description	Qty	Serial Number
	B6849	COMP PKG – CASE IH, 2300/2500 SERIES [460]		
1	335270	FRAME – CIH COMP WELDT	1	
2	328372	COVER – RTD GEARBOX	1	
3	322862	BRACKET – ATTACH WELDT RH	1	
4	322783	BRACKET – ATTACH WELDT LH	1	
5	133241	LATCH – 2300 SERIES COMBINE	2	
6	328381	BRACKET – DRIVELINE HANGER	1	
7	133242	U-BOLT	2	
A	184705	WASHER – FLAT M6-200HV-AA1J		
B	136561	BOLT – HEX HD TFL M6 X 1 X 10-8.8-AA1J		
C	18592	NUT – HEX 5/8-11 UNC GR 5 ZP		
D	184714	WASHER – FLAT REG M12-300HV		
E	184667	BOLT – RHSN M12 X 1.75 X 30-8.8-AA1J		
F	136431	NUT – HEX FLG CTR LOC M12 X 1.75-10		
G	30630	BOLT – HEX HD TFL M12 X 1.75 X 30-8.8-A3L		
H	184662	BOLT – RHSN TFL M10 X 1.5 X 30-8.8-AA1J		
J	135799	NUT – HEX FLG CTR LOC M10 X 1.5-10		

460. Case IH 2300/2500 Series Completion Package includes float module, hydraulic, and electrical completion packages required to complete a stand-alone FM100 or to convert to an existing factory-installed FM100. Kits available through Whole Goods only.

132 Case IH and New Holland CR/CX – Hydraulic Completion

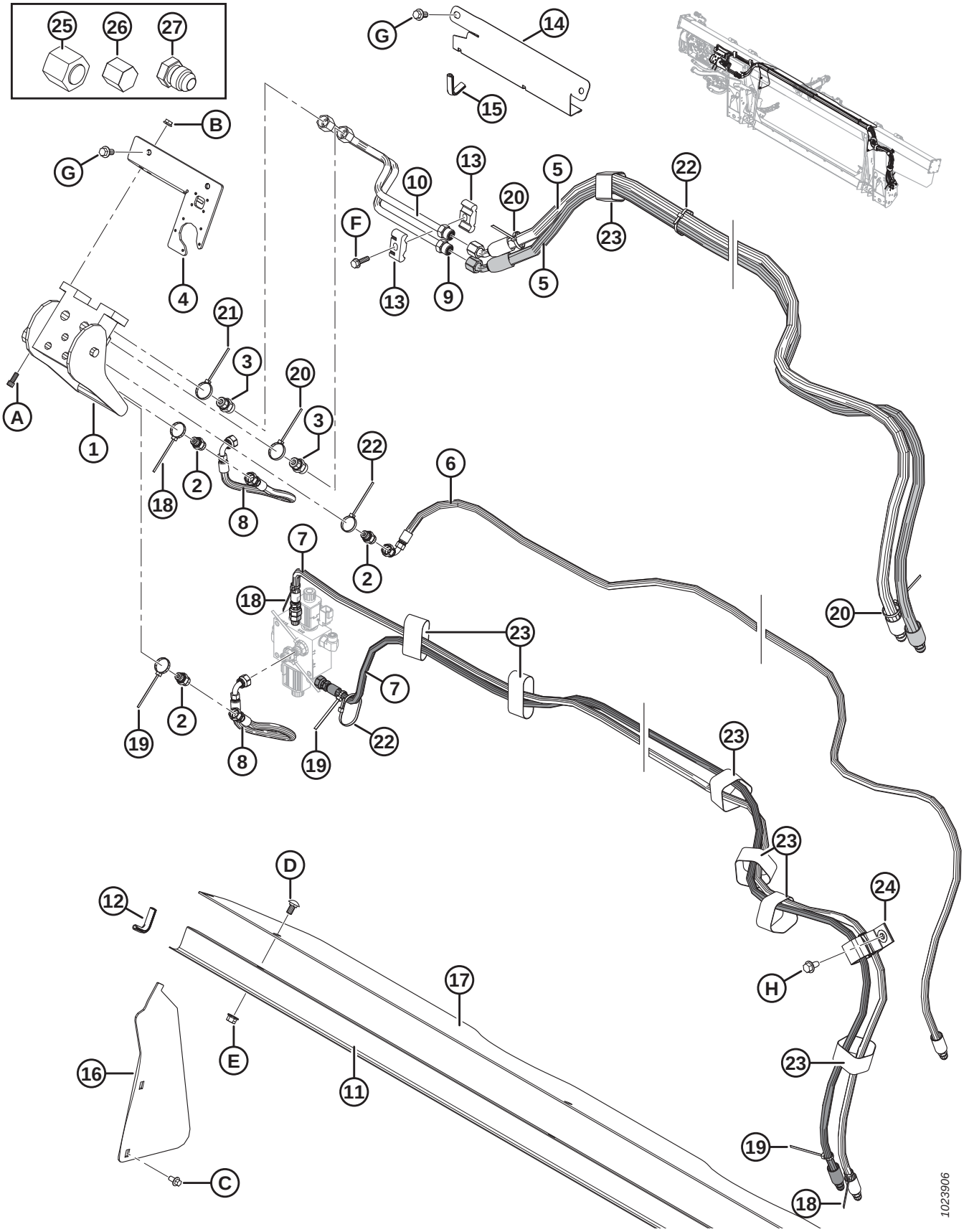

Ref	Part Number	Description	Qty	Serial Number
1	153151	COUPLING – MULTI	1	
	129800	COVER – KIT		
	129801	LATCH – BUTTON KIT		
	129976	COUPLING – 1/4 IN.		
	129977	COUPLING – 3/8 IN.		
2	252694	FITTING – ADAPTER, .052 ORIFICE	3	
	50219	O-RING – #6 ORB		
	135865	O-RING – #6 ORFS		
3	135780	FITTING – ADAPTER	2	
	44209	O-RING – #8 ORB		
	135866	O-RING – #8 ORFS		
4	301693	KIT – CNH ELECTRICAL COVER	1	
5	213182	HOSE – HYD, REEL DRIVE	2	
6	213184	HOSE – HYD, REEL LIFT	1	
7	213350	HOSE – HYD, REEL FORE-AFT (CNH)	2	
8	213354	HOSE – HYD, FORE-AFT (CNH)	2	
9	213204	LINE – REEL DRIVE PRESS (CNH)	1	
10	213205	LINE – REEL DRIVE RETURN (CNH)	1	
11	156725	COVER – HOSE	1	
12	42589	MOULDING	2	
13	37167	CLAMP	2	
14	213965	COVER – HOSE (2016 AND PRIOR)	1	–301189
15	194082	MOULDING (2016 AND PRIOR)	1	–301189
16	276284	COVER – FEED AUGER, SIDE	2	
17	276285	COVER – FEED AUGER, TOP	1	
18	49227	FASTENER – CABLE TIE (GREEN)	3	
19	40702	FASTENER – CABLE TIE (RED)	3	
20	40701	FASTENER – CABLE TIE (YELLOW)	3	
21	49232	FASTENER – CABLE TIE (WHITE)	1	
22	21763	FASTENER – CABLE TIE (BLACK)	7	
23	135444	FASTENER – CINCH STRAP 6 IN. LG	7	
24	163598	STRAP – VELCRO, HANGING	1	
25	136325	CAP – HYD SAE-6 ORFS	1	
26	108233	CAP – 1/2 IN. TUBE (FOR SHIPPING ONLY)	2	
	30813	CAP – 3/8 IN. TUBE 37 DEG FLARE (FOR SHIPPING ONLY)	3	
27	50178	PLUG – 3/8 IN. TUBE (FOR SHIPPING ONLY)	4	
A	135397	BOLT – SOCKET HD (HEX) 5/16 NC X 3/4		
B	30280	NUT – FLG SIDE LK SMTH FACE 5/16 NC GR 5 ZP		
C	136485	BOLT – HEX FLG HD TFL M8 X 1.25 X 16-8.8-A3L		
D	184657	BOLT – RHSSN M10 X 1.5 X 20-8.8-A3L		
E	135799	NUT – HEX FLG CTR LOC M10 X 1.5-10-A3L		
F	252655	BOLT – HEX HD TFL M8 X 1.25 X 30-8.8-A3L		

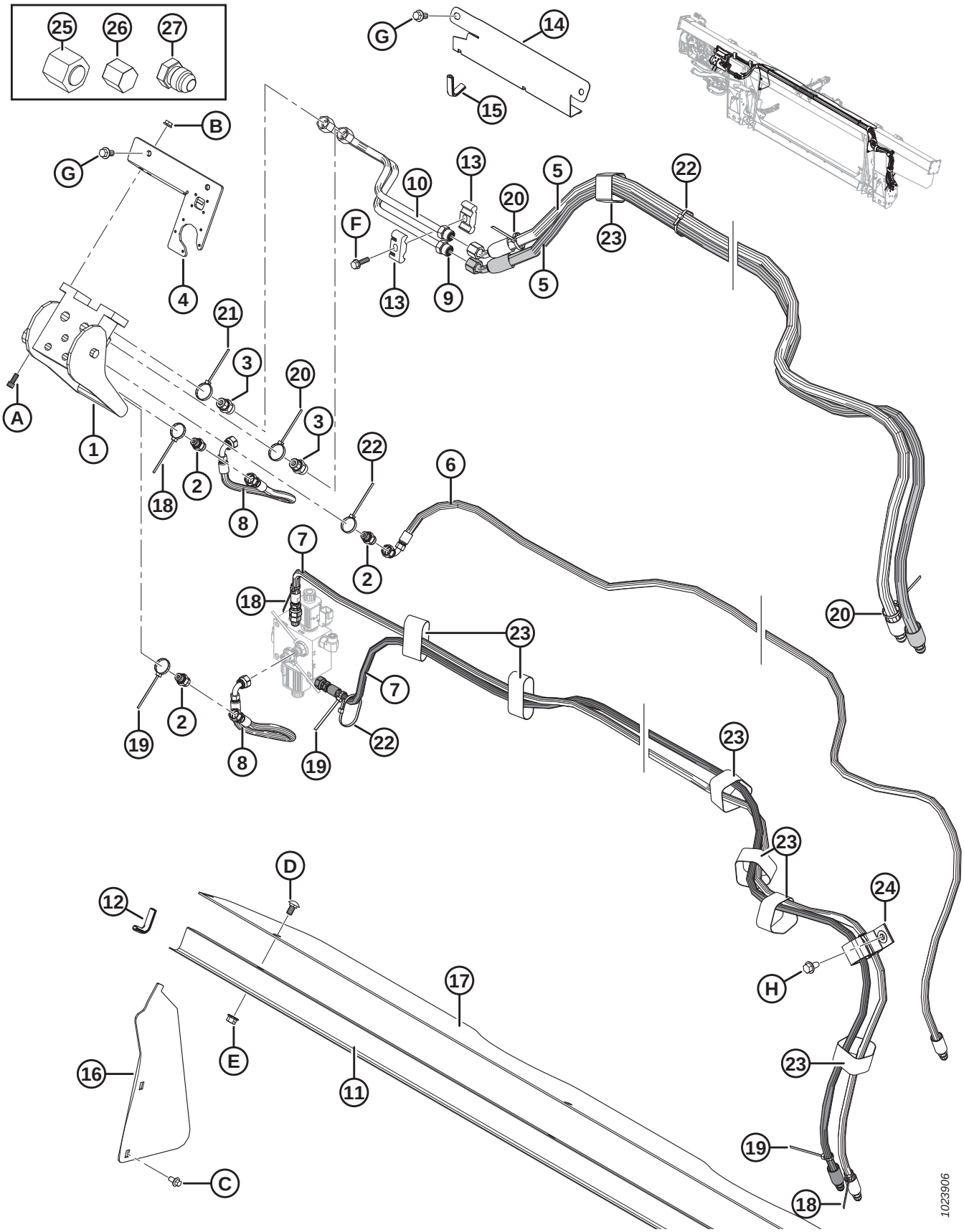
25
26
27
G
14
15
B
G
4
10
13
20
5
22
F
13
9
5
23
21
3
20
3
A
1
18
2
8
22
6
2
7
18
20
23
7
19
2
8
19
22
23
23
D
12
24
H
17
16
E
11
23
19
C
18
1023906

Ref	Part Number	Description	Qty	Serial Number
G	152655	BOLT – HEX FLG HD M10 X 1.5 X 20-8.8-A3L		
H	136209	SCREW – HEX WASHER HD M10 X 1.5 X 20-450HV-A3L		

133 Case IH 2300/2500 Series – Hydraulic Completion

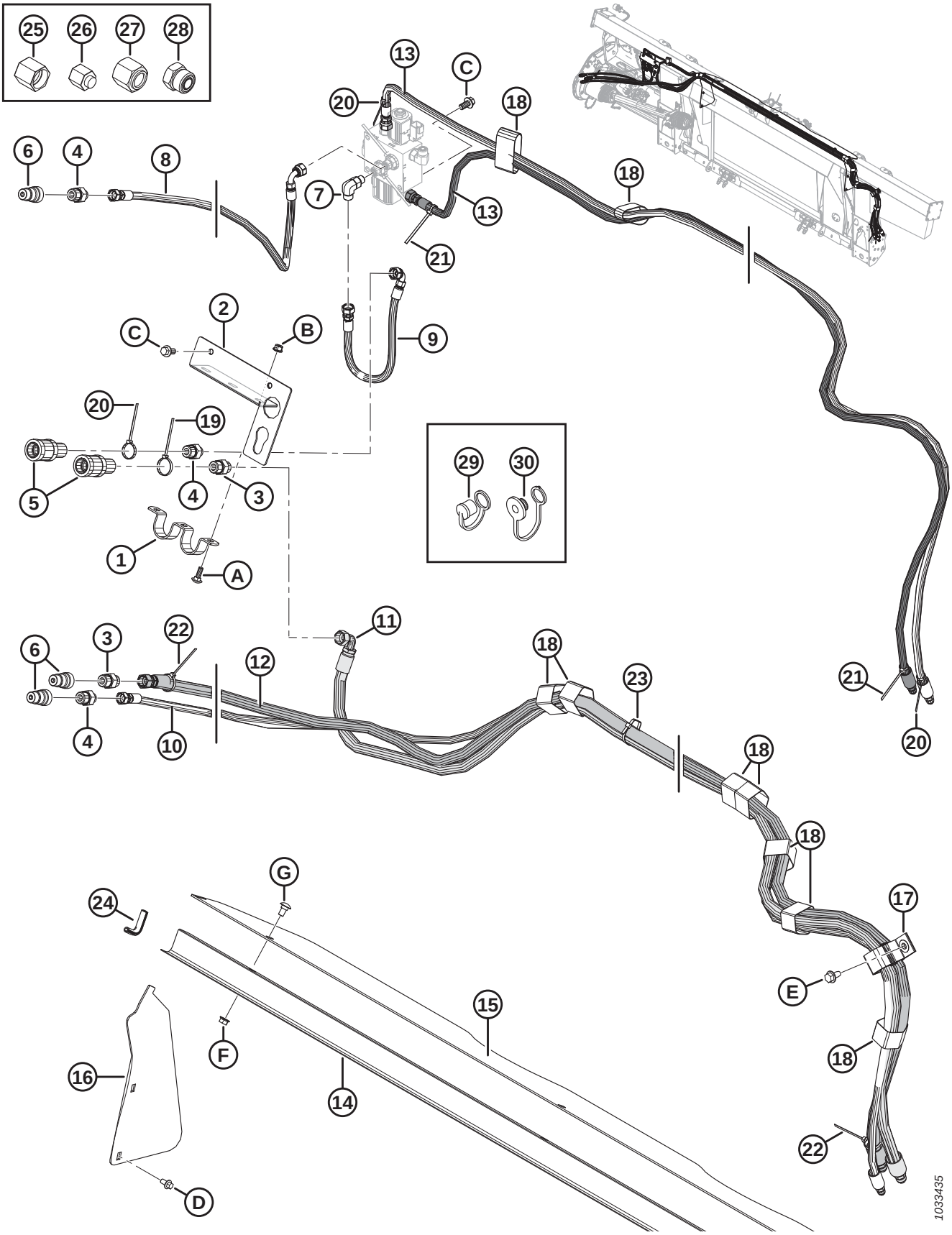

Ref	Part Number	Description	Qty	Serial Number
1	322695	HOLDER	1	
2	322692	SUPPORT – CONNECTOR	1	
3	184463	FITTING – ADAPTER HYD	2	
	44210	O-RING – #10 ORB		
	135866	O-RING – #8 ORFS		
4	184462	FITTING – ADAPTER HYD	3	
	44210	O-RING – #10 ORB		
	135865	O-RING – #6 ORFS		
5	114143	FITTING – COUPLING HYD	2	
6	114142	FITTING – COUPLING HYD	3	
7	136095	FITTING – ELBOW 90° HYD	1	
	50219	O-RING – #6 ORB		
	135865	O-RING – #6 ORFS		
8	322752	HOSE – HYD, FORE-AFT	1	
9	322751	HOSE – HYD, FORE-AFT	1	
10	322744	HOSE – HYD, REEL LIFT	1	
11	322742	HOSE – HYD, REEL DRIVE	1	
12	322739	HOSE – HYD, REEL DRIVE	1	
13	213350	HOSE – HYDRAULIC	2	
14	156725	COVER – HOSE	1	
15	276285	COVER – FEED AUGER, TOP	1	
16	276284	COVER – FEED AUGER, SIDE	2	
17	163598	CINCH STRAP – HANGING, 6 IN. LG	1	
18	135444	CINCH STRAP – 6 IN. LG	9	
19	49232	FASTENER – CABLE TIE, WHITE	1	
20	49227	FASTENER – CABLE TIE, GREEN	3	
21	40702	FASTENER – CABLE TIE, RED	2	
22	40701	FASTENER – CABLE TIE, YELLOW	2	
23	21763	FASTENER – CABLE TIE, BLACK	4	
24	42589	MOULDING	2	
25	108233	CAP – 1/2 IN. TUBE (FOR SHIPPING ONLY)	2	
26	30813	CAP – 3/8 IN. TUBE 37 DEG FLARE (FOR SHIPPING ONLY)	3	
27	136741	PLUG – HYD SAE -8 ORFS (FOR SHIPPING ONLY)	1	
	136325	PLUG – HYD SAE -6 ORFS, (FOR SHIPPING ONLY)	1	
28	136265	PLUG – HYD SAE -8 ORFS (FOR SHIPPING ONLY)	1	
	136326	PLUG – HYD SAE -6 ORFS (FOR SHIPPING ONLY)	2	
29	21856	CAP – DUST (FOR SHIPPING ONLY) [461]	3	
30	21858	CAP – DUST (FOR SHIPPING ONLY) [462]	2	
A	184648	BOLT – RHSN M8 X 1.25 X 25-8.8-AA1J		
B	135337	NUT – HEX FLG CTR LK M8 X 1.25-8-AA1J		

461. Intended for use with 1/2 in. male quick couplers.
462. Intended for use with 1/2 in. female quick couplers.

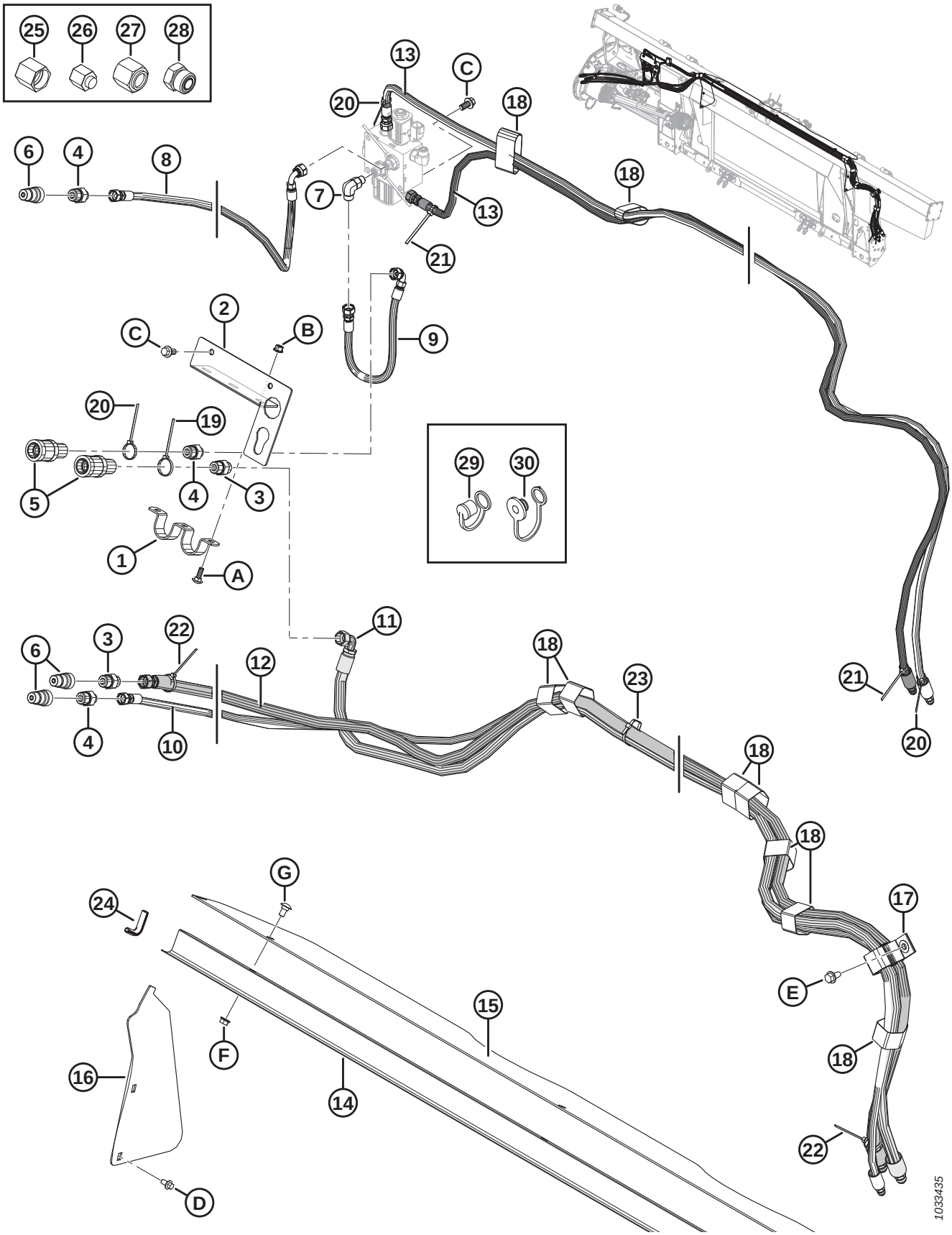
25
26
27
28
13
C
20
18
6
4
8
7
13
18
21
2
C
B
9
20
19
5
4
3
29
30
1
A
6
3
22
11
12
18
23
21
4
10
20
18
18
G
24
17
E
15
F
18
16
14
22
D
1033435

Ref	Part Number	Description	Qty	Serial Number
C	152655	BOLT – HEX FLG HD M10 X 1.5 X 20-8.8-AA1J		
D	136485	BOLT – HEX FLG HD TFL M8 X 1.25 X 16-8.8-AA1J		
E	136209	SCREW – HEX WASHER M10 X 1.5 X 20-450HV		
F	30228	NUT – FLG DT SM FACE 3/8-16 UNC-GR5-AA1J		
G	21472	BOLT – RHSN 3/8-16 X .75-GR5 AA1J		

134 Case IH and New Holland CR/CX – Electrical Completion

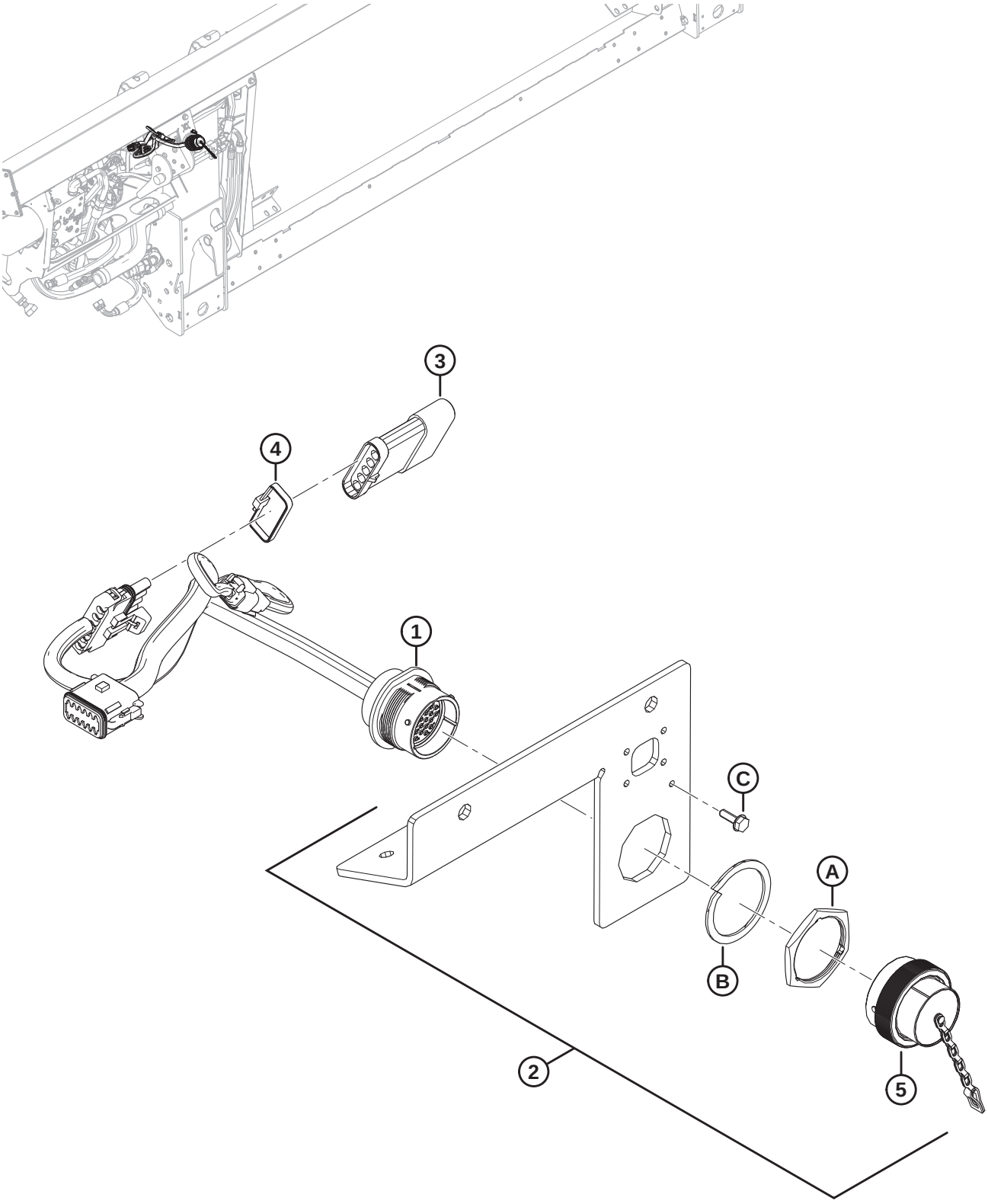

NOTE:

For specific electrical harness parts, refer to Electrical Connector Parts Catalog (MD #169641).

Ref	Part Number	Description	Qty	Serial Number
1	213211	HARNESS – FM100, COMPLETION, CNH	1	
	134746	CONNECTOR – CAP, PLUG, 12-WAY	1	
2	301693	KIT – CNH ELECTRICAL COVER	1	
3	153933	RESISTOR – HEADER RECOGNITION	1	
4	30753	FASTENER – CABLE TIE (BLACK)	1	
5	134053	CAP – PLUG, HD30, SIZE 24	1	
A	134010	NUT – PANEL, HD30, SIZE 24		
B	134011	WASHER – LOCK SPRING, DEUTSCH HD, SIZE 24		
C	21947	SCREW – SELF TAPPING HEX WASH HD #10 X 5/8 ZP		

135 Case IH 2300/2500 Series – Electrical Completion

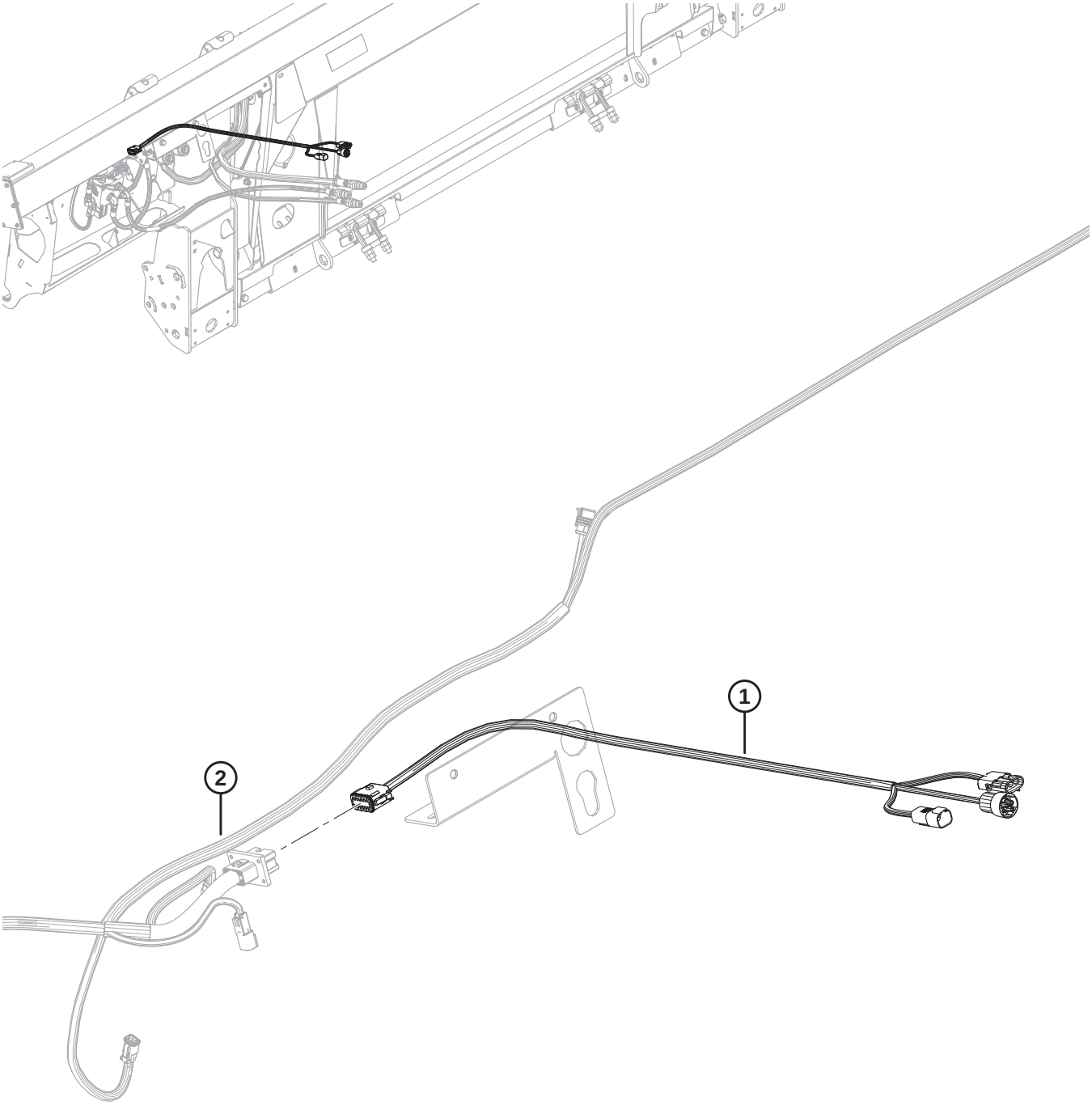

1032087

NOTE:

For specific electrical harness parts, refer to Electrical Connector Parts Catalog (MD #169641).

Ref	Part Number	Description	Qty	Serial Number
1	322748	HARNESS – FM100, COMPLETION, CIH	1	
	134746	CONNECTOR – CAP, PLUG, 12-WAY	1	
2	REF	HARNESS – FM100, MAIN	1	

136 New Holland 10 Volt Auto Header Height Control Converter Kit

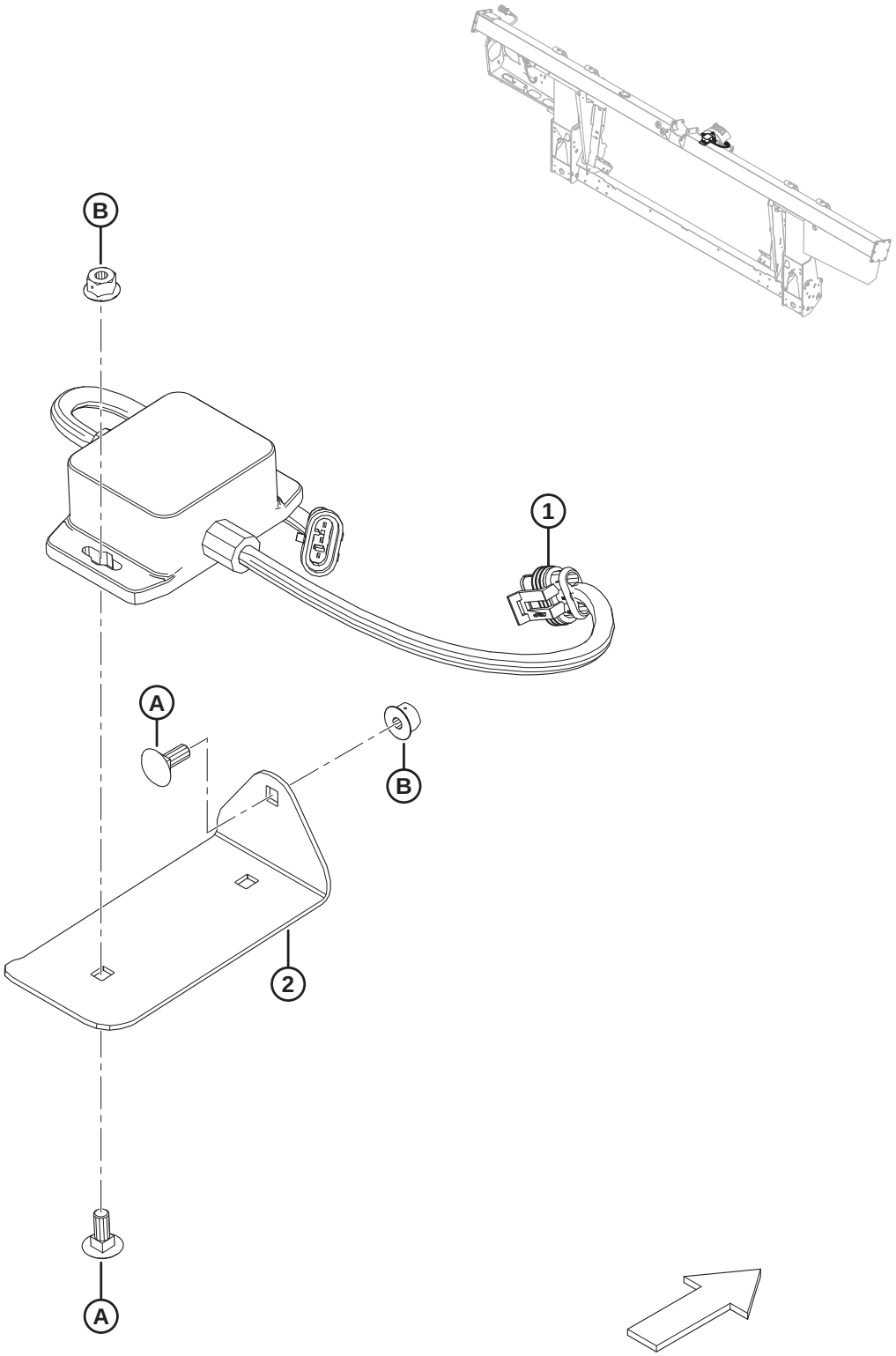

NEW HOLLAND 10 VOLT AUTO HEADER HEIGHT CONTROL CONVERTER KIT

Ref	Part Number	Description	Qty	Serial Number
	B6421	KIT – 10V CONVERTER [463]		
	295013	KIT – 10V CONVERTER [464]		
1	276759	ADAPTER – 10V	1	
2	295401	PLATE – MOUNT	1	
A	136748	BOLT – RHSN M6 X 1 X 16-8.8-A2L		
B	152668	NUT – HEX FLG CTR LOC M6 X 1-8-A2L		

463. Includes 10 Volt Converter kit (MD #295013). Kits available through Whole Goods only.
464. Includes all listed parts, hardware, and instructions.

137 New Holland CR Fillers Conversion Kit

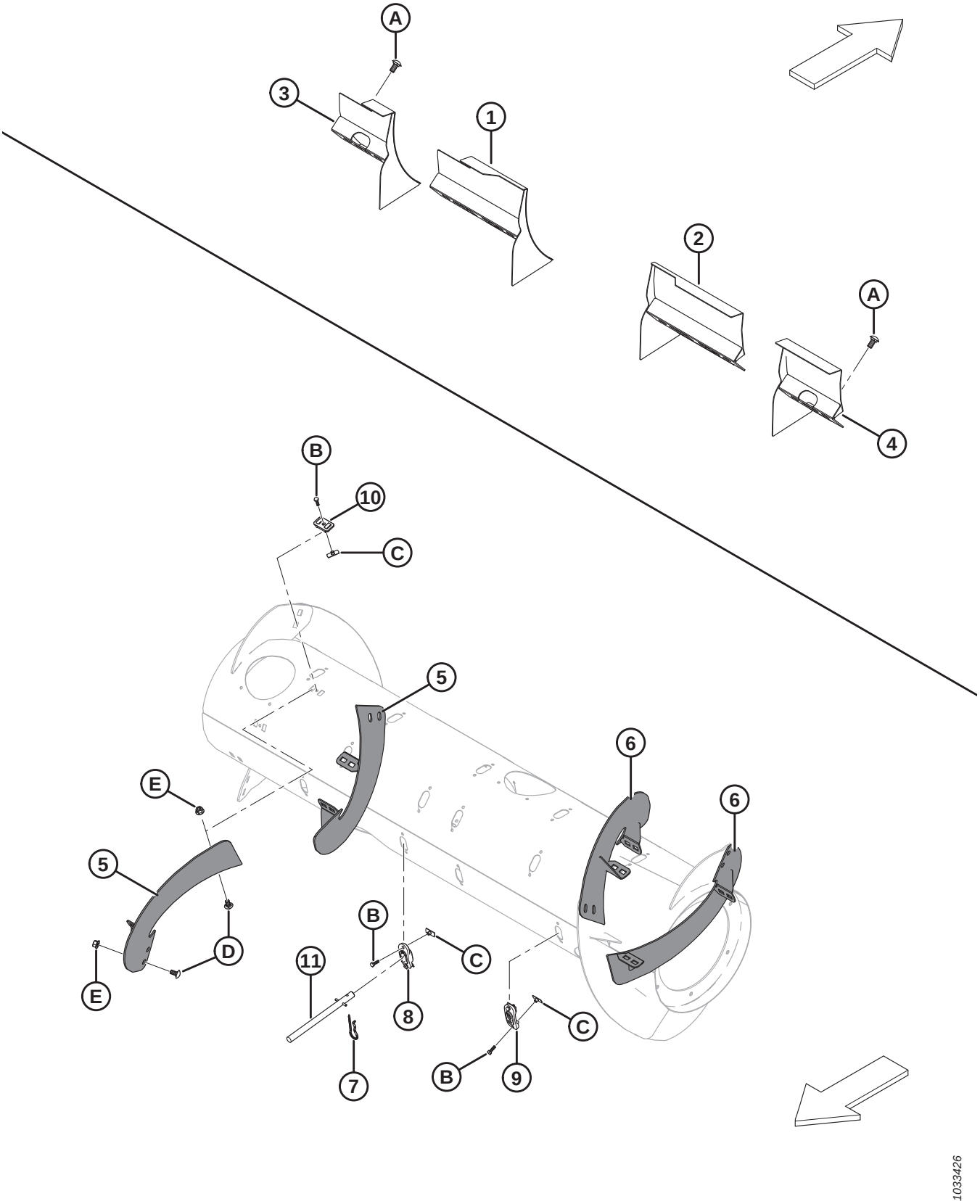

NEW HOLLAND CR FILLERS CONVERSION KIT

Ref	Part Number	Description	Qty	Serial Number
	B6886	KIT – NEW HOLLAND CR FILLERS [465]		
1	213592	DEFLECTOR WELDT – NH CR NARROW ONLY (LH)	1	
2	213593	DEFLECTOR WELDT – NH CR NARROW ONLY (RH)	1	
3	213614	DEFLECTOR WELDT – NH CR WIDE ONLY (LH, SHORT)	1	
4	213613	DEFLECTOR WELDT – NH CR WIDE ONLY (RH, SHORT)	1	
5	287890	FLIGHTING, RTD – RH, LONG (HIWEAR)	2	
6	287889	FLIGHTING, RTD – LH, LONG (HIWEAR)	2	
7	123180	PIN – HAIR	8	
8	337143	GUIDE	8	
9	187137	PLUG	4	
10	213084	PLUG – FLIGHTING SLOT	8	
11	337152	KIT – FINGER [466]	8	
	7642	PIN – SPRING 3/16 DIA X 1.5 LG		
A	152439	BOLT – RHSSN M12 X 1.75 X 25-8.8-A3L		
B	252703	BOLT – HEX HD TFL M6 X 1 X 20 X SPCL-12.9-AA2L		
C	197263	NUT – TEE M6 X 1		
D	184657	BOLT – RHSSN M10 X 1.5 X 20-8.8-A3L		
E	135799	NUT – HEX FLG CTR LOC M10 X 1.5-10-A3L		

465. Kits available through Whole Goods only.
466. Includes solid finger (not sold separately), spring pin (MD #7642), guide (MD #337143), and instructions.

138 CLAAS Lexion 500/700 Series – Float Module Completion

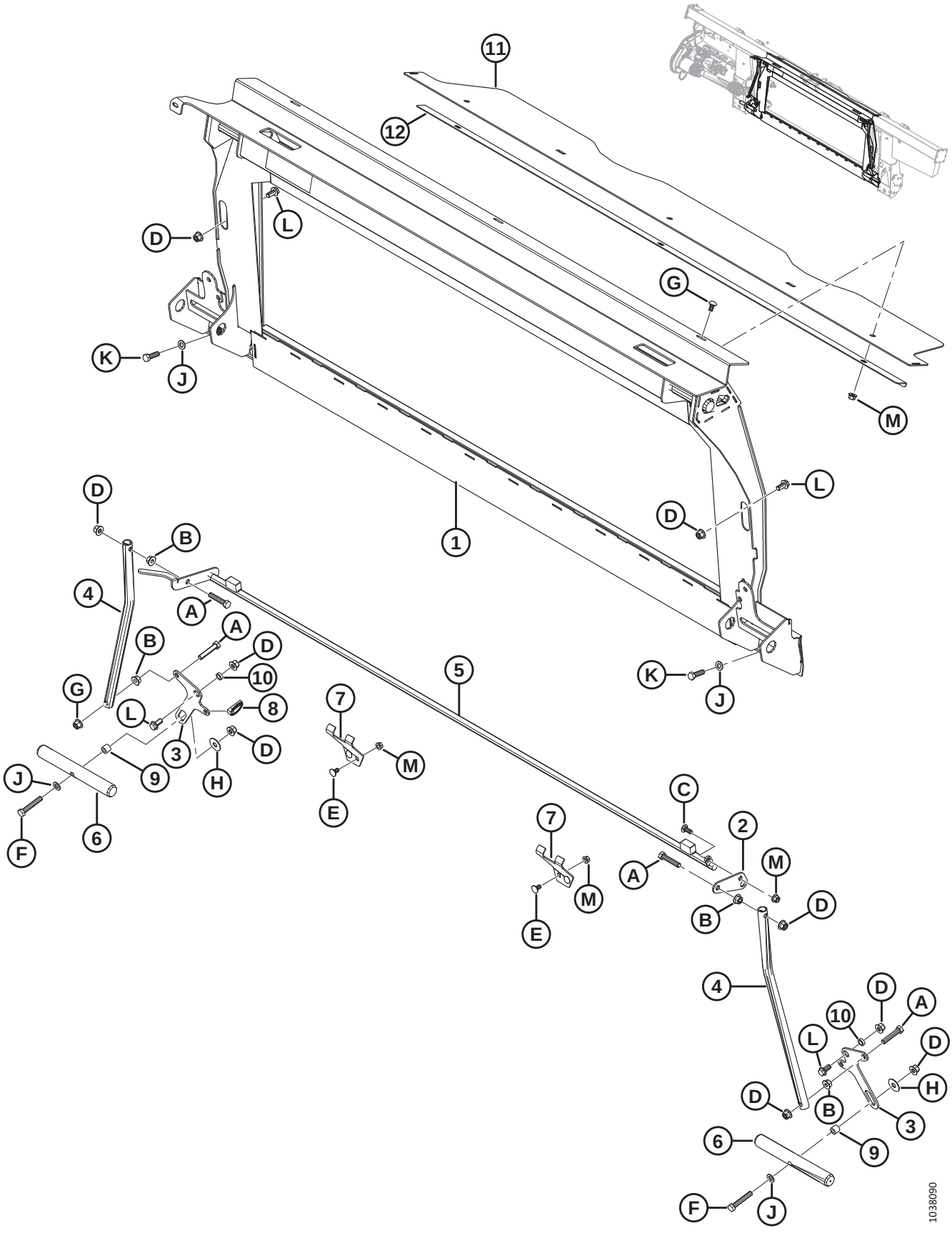

Ref	Part Number	Description	Qty	Serial Number
	B6960	**COMP PKG – CLAAS** [467]		
1	**347077**	**FRAME – CLAAS TRANSITION W/DECAL**	**1**	
2	**328582**	**LEVER**	**1**	
3	**347569**	**LEVER – PIVOT**	**2**	
4	156783	TUBE – LINK	2	
5	**337311**	**LATCH – TRANSFER WELDMENT**	**1**	
6	133138	SHAFT [468]	2	
7	245246	SUPPORT – LOCK KEEPER	2	
8	**113561**	**PIN – LYNCH**	**1**	
9	**337043**	**BUSHING – M12 THREADED**	**2**	
10	133439	SPACER – 0.75 O.D. X 0.120 IN. WALL	2	
11	**328356**	**COVER – FEED AUGER TOP**	**1**	
12	**301629**	**RETAINER – DUST COVER**	**1**	
A	**237316**	**BOLT – HEX HD TFL M12 X 1.75 X 60-8.8-AA1J**		
B	**136036**	**NUT – HEX SM FLG M12 X 1.75-8-AA1J**		
C	**136506**	**BOLT – RHSSN M10 X 1.5 X 25-8.8-AA1J**		
D	**136431**	**NUT – HEX FLG CTR LOC M12 X 1.75-10-A3L**		
E	**136178**	**BOLT – RHSN M10 X 1.5 X 20-8.8-AA1J**		
F	**184675**	**BOLT – HEX HD M12 X 1.75 X 70-8.8-AA1J**		
G	**184657**	**BOLT – RHSSN M10 X 1.5 X 20-8.8-AA1J**		
H	32247	WASHER – FLAT		
J	184714	WASHER – FLAT REG M12-300HV-A3L		
K	184669	BOLT – HEX HD M12 X 1.75 X 40-8.8-A3L		
L	136625	BOLT – HEX SER FLG HD M12 X 1.75 X 25 X SPCL-100-AA1J		
M	**135799**	**NUT – HEX FLG CTR LOC M10 X 1.5-10**		

467. CLAAS Lexion 500/700 Series Completion Package includes float module, hydraulic, and electrical completion packages required to complete a stand-alone FM100 or to convert to an existing factory-installed FM100. Kits available through Whole Goods only.
468. Shaft (MD #304782) with additional machining is available for service of CLAAS machines with fit-up issues in the field. For more information, see Service Bulletin SB #1917.

139 CLAAS Lexion 500/700 Series – Hydraulic Completion

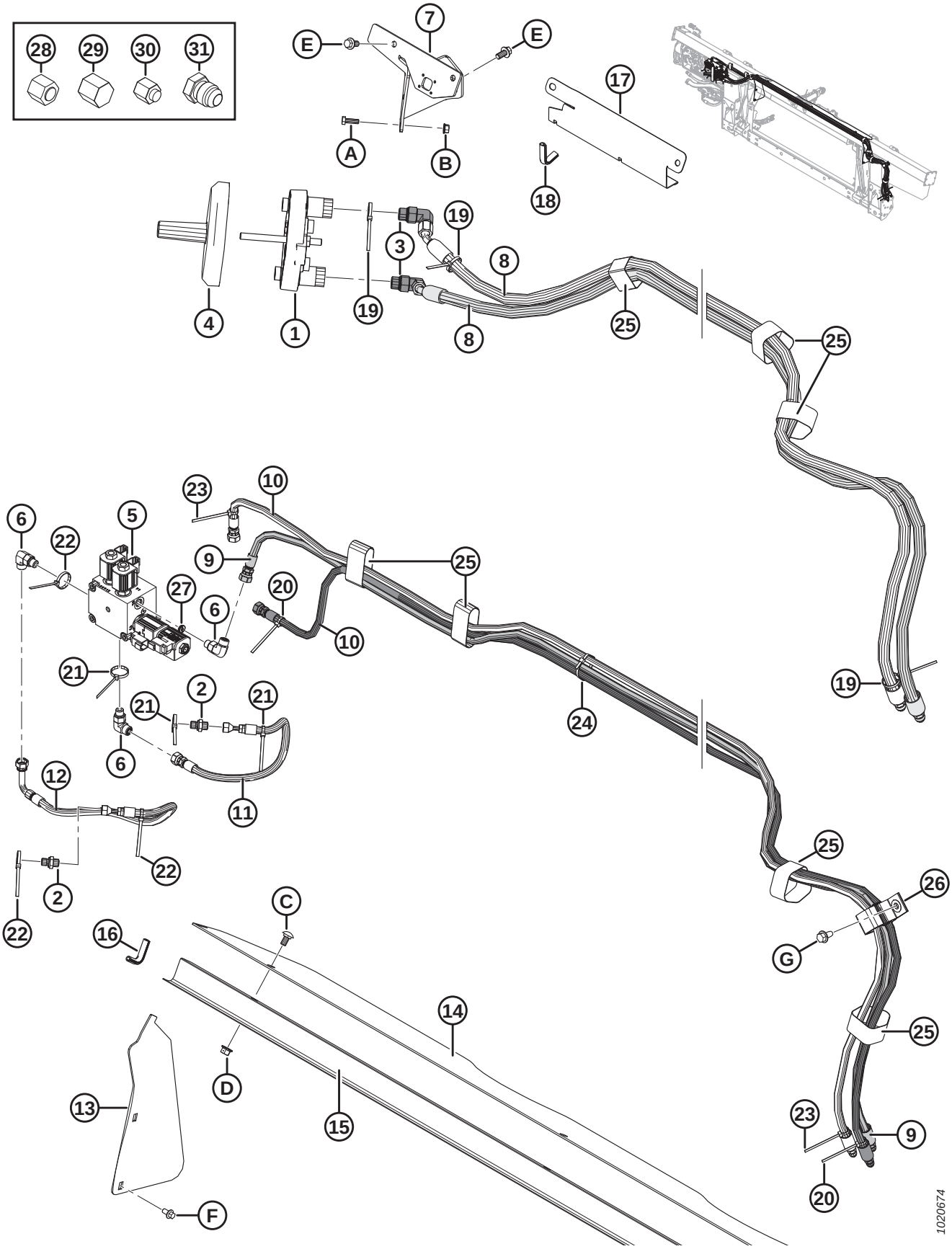

Ref	Part Number	Description	Qty	Serial Number
1	190866	COUPLER – LEXION MULTILINK	1	
2	136503	FITTING – ADAPTER -4 ORFS X -4 BSPP	2	
	135957	O-RING – #4 ORFS		
	136519	O-RING – #4 BSPP		
3	135917	FITTING – ELBOW 90° HYD	2	
	44210	O-RING – #10 ORB		
	135866	O-RING – #8 ORFS		
4	129481	COVER	1	
5	335341	MANIFOLD – SELECTOR, CLAAS	1	
	287462	COIL – 12VDC-0.625 IN. (V3)		
	287456	VALVE – 3-POS 4-WAY (V3)		
	245159	SEAL KIT (FOR VALVE MD #287456)		
	287461	COIL – 12VDC-0.500 IN. (V1, V2)		
	287460	VALVE – NC POPPET (V1, V2)		
	287465	SEAL KIT (FOR VALVE MD #287460)		
	279228	VALVE – CARTRIDGE, PO CHECK (CPD)		
	220959	SEAL KIT (FOR VALVE MD #279228)		
	163184	O-RING (2020 AND PRIOR) [469]		–396189
	320284	O-RING – 2.38 X 20.64		396190–
	136108	SCREW – HEX SOC HD M10 X 1.5 X 80-12.9-AA1J		
	184711	WASHER – FLAT REG M10-200HV-AA1J		
6	136095	FITTING – ELBOW 90° HYD	3	
	50219	O-RING – #6 ORB		
	135865	O-RING – #6 ORFS		
7	287344	SUPPORT – WELDMENT LEXION COUPLER	1	
8	287864	HOSE – HYD, REEL DRIVE	2	
9	287865	HOSE – HYD, REEL LIFT	1	
10	287866	HOSE – HYD, REEL FORE-AFT	2	
11	213374	HOSE – HYD, REEL PRESS	1	
12	287870	HOSE – HYD, REEL RETURN	1	
13	276284	COVER – FEED AUGER, SIDE	2	
14	276285	COVER – FEED AUGER, TOP	1	
15	156725	COVER – HOSE	1	
16	42589	MOULDING	2	
17	213965	COVER – HOSE (2016 AND PRIOR)	1	–301189
18	194082	MOULDING (2016 AND PRIOR)	1	–301189
19	40701	FASTENER – CABLE TIE (YELLOW)	3	
20	40702	FASTENER – CABLE TIE (RED)	2	
21	40703	FASTENER – CABLE TIE (BLUE)	3	
22	40704	FASTENER – CABLE TIE (ORANGE)	3	
23	49227	FASTENER – CABLE TIE (GREEN)	2	

469. Service part only for units made in model year 2020 and prior. For units made in model year 2021 and later, or for units serviced with manifold MD #335341, order O-ring MD #320284.

CLAAS LEXION 500/700 SERIES – HYDRAULIC COMPLETION

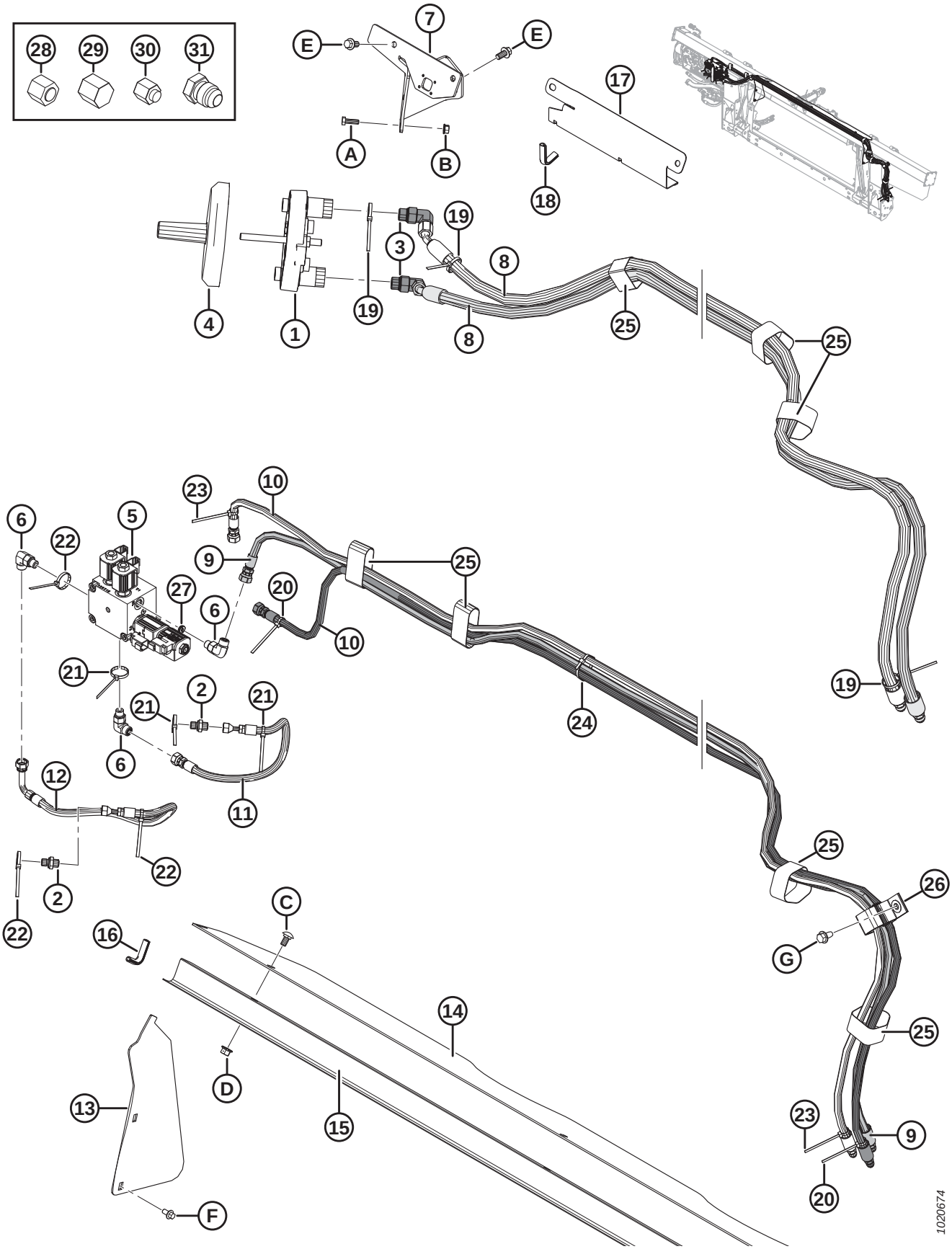

Ref	Part Number	Description	Qty	Serial Number
24	21763	FASTENER – CABLE TIE (BLACK)	3	
25	135444	FASTENER – CINCH STRAP 6 IN. LG	7	
26	163598	STRAP – VELCRO, HANGING	1	
27	252693	RESTRICTOR – #6 ORB X .052 IN.	1	
28	136325	CAP – HYD SAE-6 ORFS	2	
29	108233	CAP – 1/2 IN. TUBE (FOR SHIPPING ONLY)	2	
30	30813	CAP – 3/8 IN. TUBE 37 DEG FLARE (FOR SHIPPING ONLY)	3	
31	50178	PLUG – 3/8 IN. TUBE (FOR SHIPPING ONLY)	4	
A	184652	BOLT – HEX HD TFL M8 X 1.25 X 25-8.8-A2L		
B	135337	NUT – HEX FLG CTR LOC M8 X 1.25-8-A2L		
C	184657	BOLT – RHSSN M10 X 1.5 X 20-8.8-A3L		
D	135799	NUT – HEX FLG CTR LOC M10 X 1.5-10-A3L		
E	152655	BOLT – HEX FLG HD M10 X 1.5 X 20-8.8-A3L		
F	136485	BOLT – HEX FLG HD TFL M8 X 1.25 X 16-8.8-A3L		
G	136209	SCREW – HEX WASHER HD M10 X 1.5 X 20-450HV-A3L		

140 CLAAS Lexion 500/700 Series – Electrical Completion

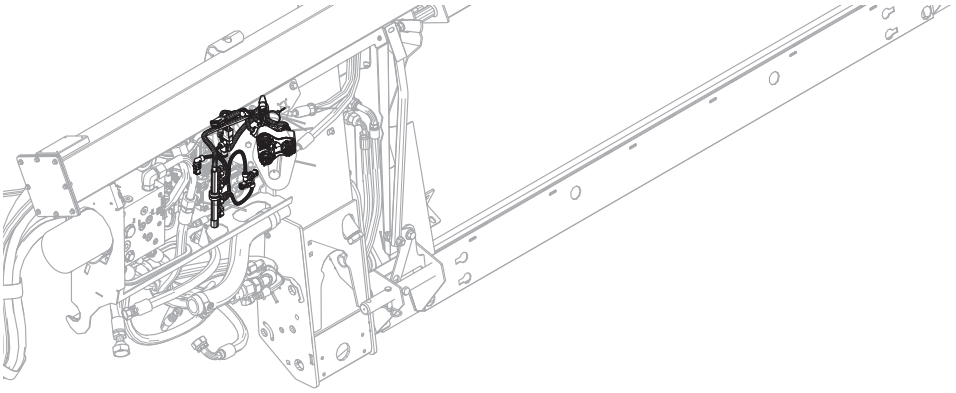

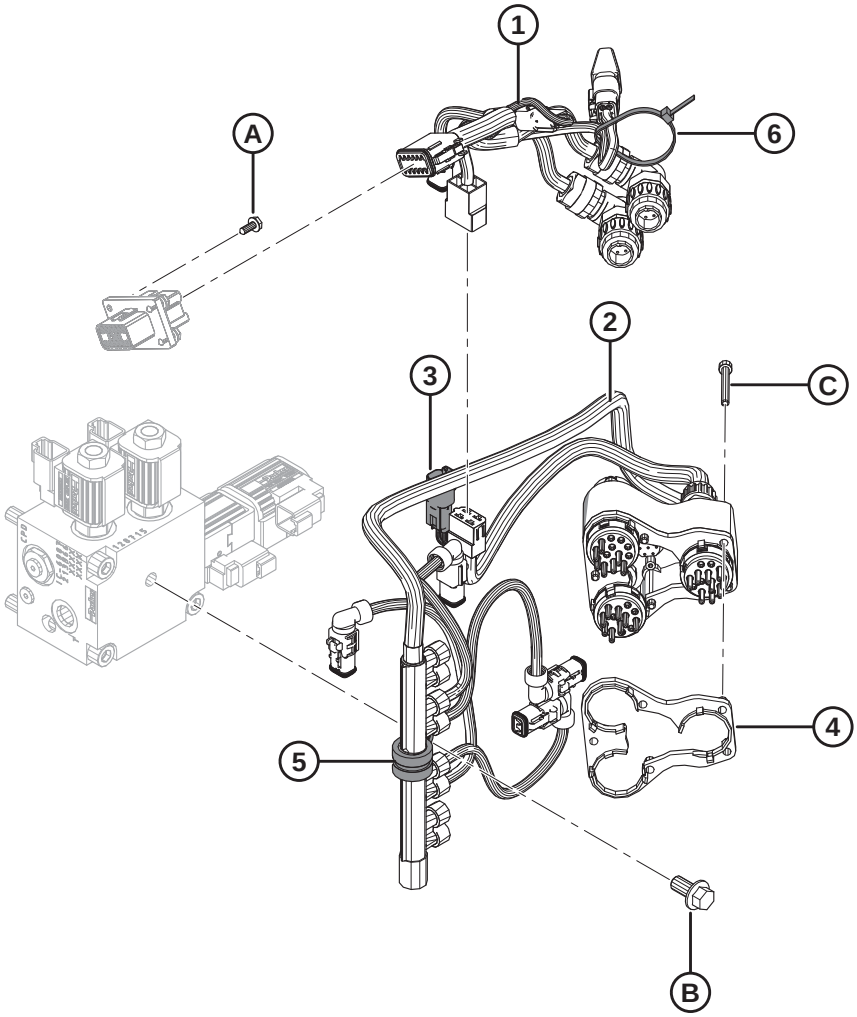

1020668

NOTE:

For specific electrical harness parts, refer to Electrical Connector Parts Catalog (MD #169641).

Ref	Part Number	Description	Qty	Serial Number
1	276806	HARNESS – FM100, COMPLETION, CLAAS	1	
	134746	CONNECTOR – CAP, PLUG, 12-WAY	1	
	283215	MODULE – DIODE PACK, 6A DIODE [470]	1	
2	276630	HARNESS – COUPLER, CLAAS [471]	1	
	129772	HARNESS – WIRING [472]	1	
3	213824	HARNESS – LEXION COUPLER MOD [472]	1	
4	129773	SPACER – WIRING HARNESS	1	
5	135709	CLAMP – INSULATED 3/4 IN.	1	
6	21763	FASTENER – CABLE TIE (BLACK)	1	
A	REF	SCREW – SELF TAPPING HEX WASH HD #10 X 1/2 ZP [473]		
B	152655	BOLT – HEX FLG HD M10 X 1.5 X 20-8.8-A3L		
C	129965	SCREW – HEX SOC HD M5 X 0.8 X 45-12.9-A2L		

470. Service part only for harness (MD #276806).
471. Includes harnesses (MD #129772 and 213824).
472. Service part only for harness (MD #276630).
473. Screw (MD #42292) not included in completion package. Refer to Section *121 Electrical Components – FM100, page 369*.

141 CLAAS Reel Height Resistor Kit

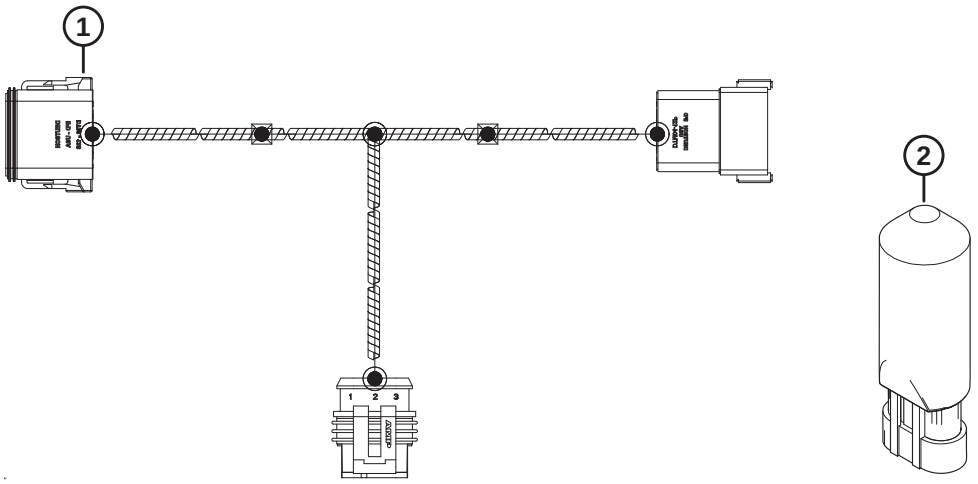

1023968

CLAAS REEL HEIGHT RESISTOR KIT

Ref	Part Number	Description	Qty	Serial Number
	295710	KIT – CLAAS REEL HEIGHT RESISTOR [474]		
1	301104	HARNESS – CLAAS REEL HT V-REG.	1	
2	133683	REGULATOR – VOLTAGE	1	

474. Kit includes listed parts.

142 John Deere 50 Series – Float Module Completion

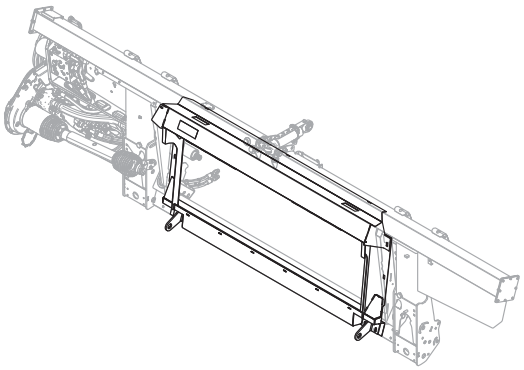

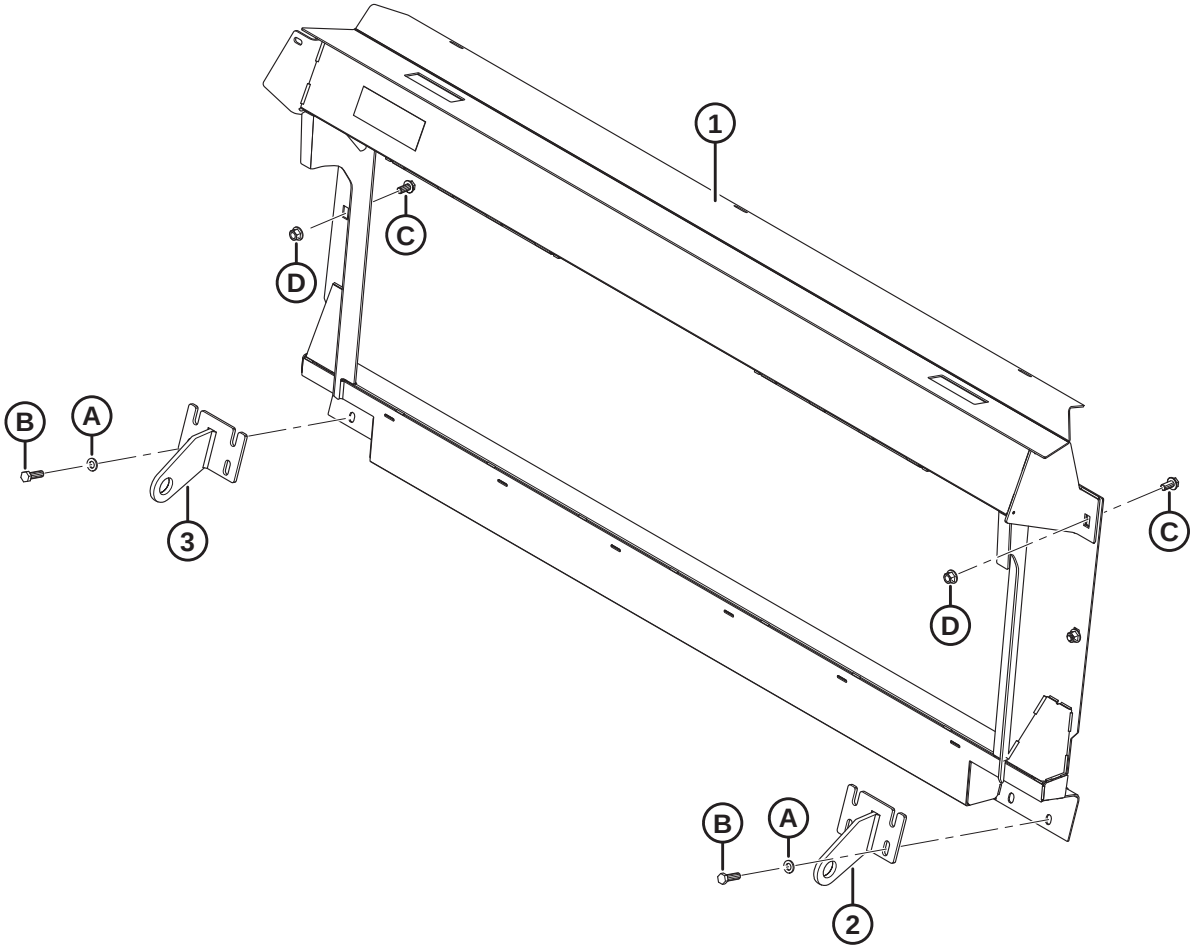

1033538

Ref	Part Number	Description	Qty	Serial Number
	B9030	**COMP PKG – JD 50 SERIES** [475]		
1	294514	FRAME – JD WELDT LEVEL LAND	1	
2	151942	BRACKET – RIGHT WELDT	1	
3	151941	BRACKET – LEFT WELDT	1	
A	184714	WASHER – FLAT REG M12-300HV		
B	184669	BOLT – HEX HD M12 X 1.75 X 40-8.8-AA1J		
C	136625	BOLT – HEX SER FLG HD M12 X 1.75 X 25 X SPCL-100-AA1J		
D	136431	NUT – HEX FLG CTR LOC M12 X 1.75-10		

475. JD 50 Series Completion Package includes float module, hydraulic, and electrical completion packages required to complete a stand-alone FM100 or to convert to an existing factory-installed FM100. Kits available through Whole Goods only.

143 John Deere 60/70 S/T Series – Float Module Completion

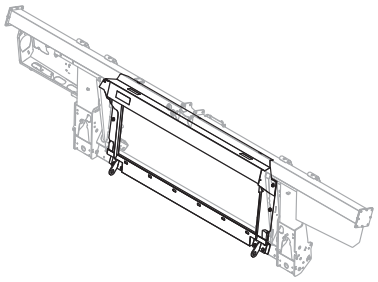

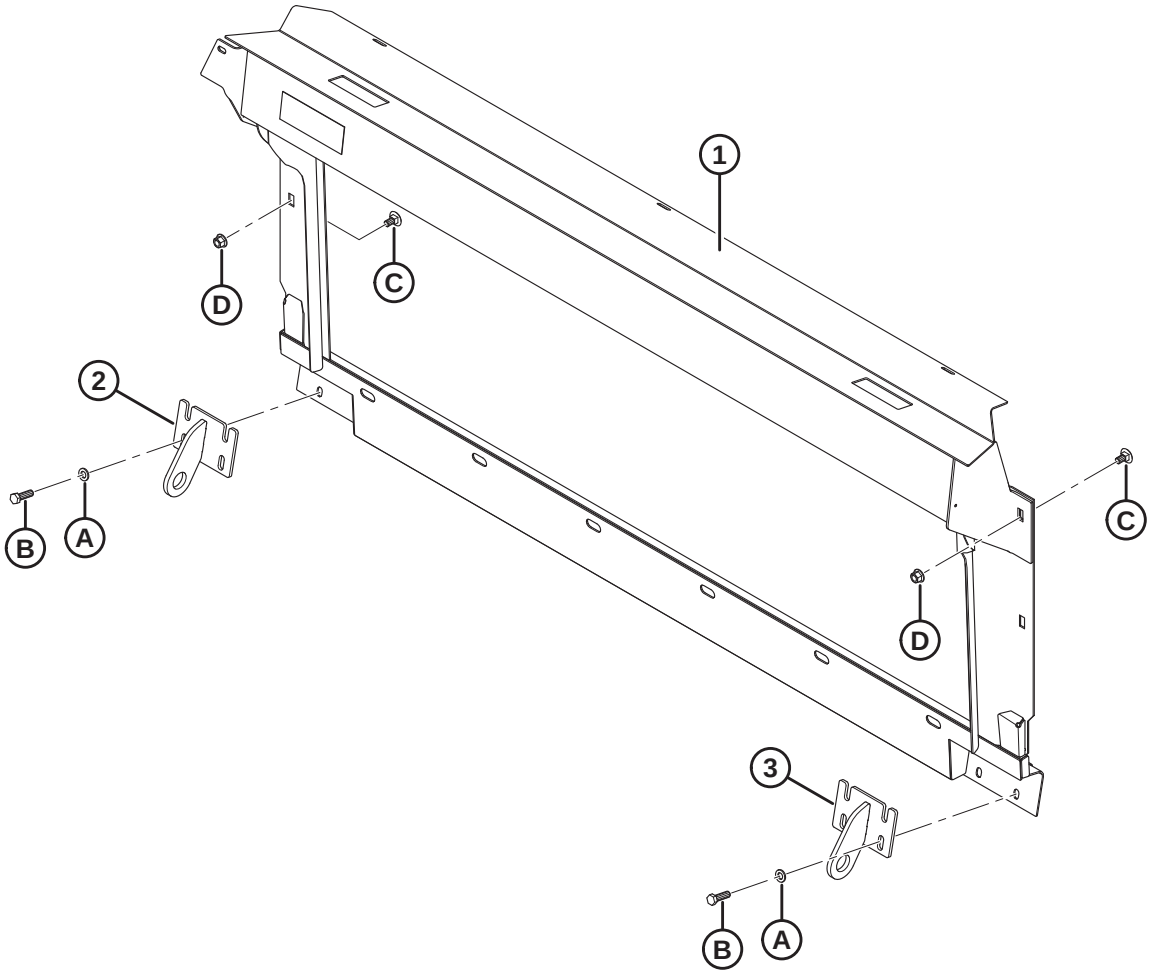

1017223

Ref	Part Number	Description	Qty	Serial Number
	B6962	**COMP PKG – JD 60/70 S SERIES** [476]		
	B6963	**COMP PKG – JD 60/70 T SERIES** [476]		
1	**347301**	**ASSEMBLY – JD CM TRANS FRAME W/DECAL (S SERIES W/ CONTOUR MASTER FEEDER HOUSE)**	**1**	
	294514	FRAME – JD WELDT LEVEL LAND (T OR S SERIES W/ LEVEL LAND FEEDER HOUSE)	1	
2	245760	BRACKET – LEFT WELDT (S SERIES ONLY)	1	
	151941	BRACKET – LEFT WELDT (T SERIES ONLY)	1	
3	245761	BRACKET – RIGHT WELDT (S SERIES ONLY)	1	
	151942	BRACKET – RIGHT WELDT (T SERIES ONLY)	1	
A	184714	WASHER – FLAT REG M12-300HV-A3L		
B	184669	BOLT – HEX HD M12 X 1.75 X 40-8.8-A3L		
C	136625	BOLT – HEX SER FLG HD M12 X 1.75 X 25 X SPCL-100-AA1J		
D	136431	NUT – HEX FLG CTR LOC M12 X 1.75-10-A3L		

476. Includes float module, hydraulic, and electrical completion packages required to complete a stand-alone FM100 or to convert to an existing factory-installed FM100. Kits available through Whole Goods only.

144 John Deere 50 Series – Hydraulic Completion

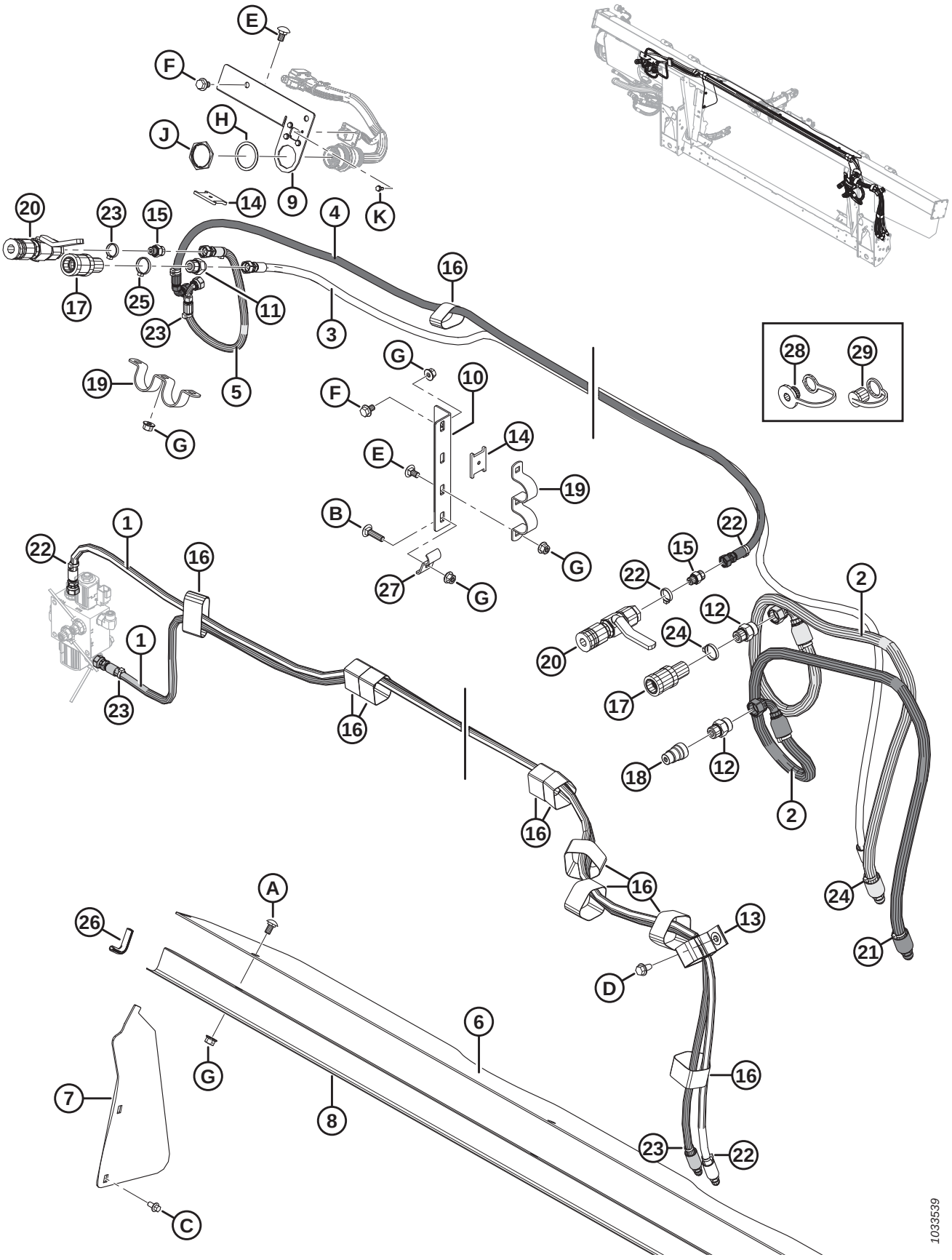

Ref	Part Number	Description	Qty	Serial Number
1	287861	HOSE – HYD, REEL F-A	2	
2	337178	HOSE – REEL DRIVE JD50	2	
3	337175	HOSE – REEL LIFT JD50	1	
4	337174	HOSE – REEL FORE JD50	1	
5	337173	HOSE – REEL AFT JD50	1	
6	276285	COVER – FEED AUGER, TOP	1	
7	276284	COVER – FEED AUGER-SIDE	2	
8	156725	COVER – HOSE	1	
9	337163	SUPPORT – HYD. COUPLER	1	
10	337177	SUPPORT – HYD. COUPLER	1	
11	184462	FITTING – ADAPTER HYD	1	
	44210	O-RING – #10 ORB		
	135865	O-RING – #6 ORFS		
12	184461	FITTING – ADAPTER HYD	2	
	44210	O-RING – #10 ORB		
	135867	O-RING – #10 ORFS		
13	163598	CINCH STRAP, HANGING, 6 IN. LG	1	
14	158253	SPACER – COUPLER MTG	2	
15	135778	FITTING – ADAPTER	2	
	50219	O-RING – #6 ORB		
	135865	O-RING – #6 ORFS		
16	135444	CINCH STRAP 6 IN. LG	10	
17	114143	FITTING – COUPLING HYD	2	
18	114142	FITTING – COUPLING HYD	1	
19	114140	HOLDER	2	
20	114120	FITTING – COUPLING HYD	2	
21	49232	FASTENER – CABLE TIE, WHITE	2	
22	49227	FASTENER – CABLE TIE, GREEN	8	
23	40702	FASTENER – CABLE TIE, RED	5	
24	40701	FASTENER – CABLE TIE, YELLOW	3	
25	21763	FASTENER – CABLE TIE, BLACK	4	
26	42589	MOULDING	2	
27	29934	HOLDER	1	
28	21858	PLUG – DUST	2	
29	21856	CAP – DUST	1	
A	184657	BOLT – RHSSN M10 X 1.5 X 20-8.8-AA1J		
B	152732	BOLT – RHSN M10 X 1.5 X 40-8.8-AA1J		
C	136485	BOLT – HEX FLG HD TFL M8 X 1.25 X 16-8.8-AA1J		
D	136209	SCREW – HEX WSHR M10 X 1.5 X 20-450HV		
E	136178	BOLT – RHSN M10 X 1.5 X 20-8.8-AA1J		
F	136151	BOLT – HEX FLG HD TFL M10 X 1.5 X 16-8.8-AA1J		
G	135799	NUT – HEX FLG CTR LOC M10 X 1.5-10		
H	134011	WASHER – LOCK SPRING, DEUTSCH HD, SIZE 24		
J	134010	NUT – PANEL, HD30, SIZE 24		
K	42292	SCREW – TPG HEX WSH HD #10 X 1/2-GR5-AA1T		

145 John Deere 60/70 S/T Series – Hydraulic Completion

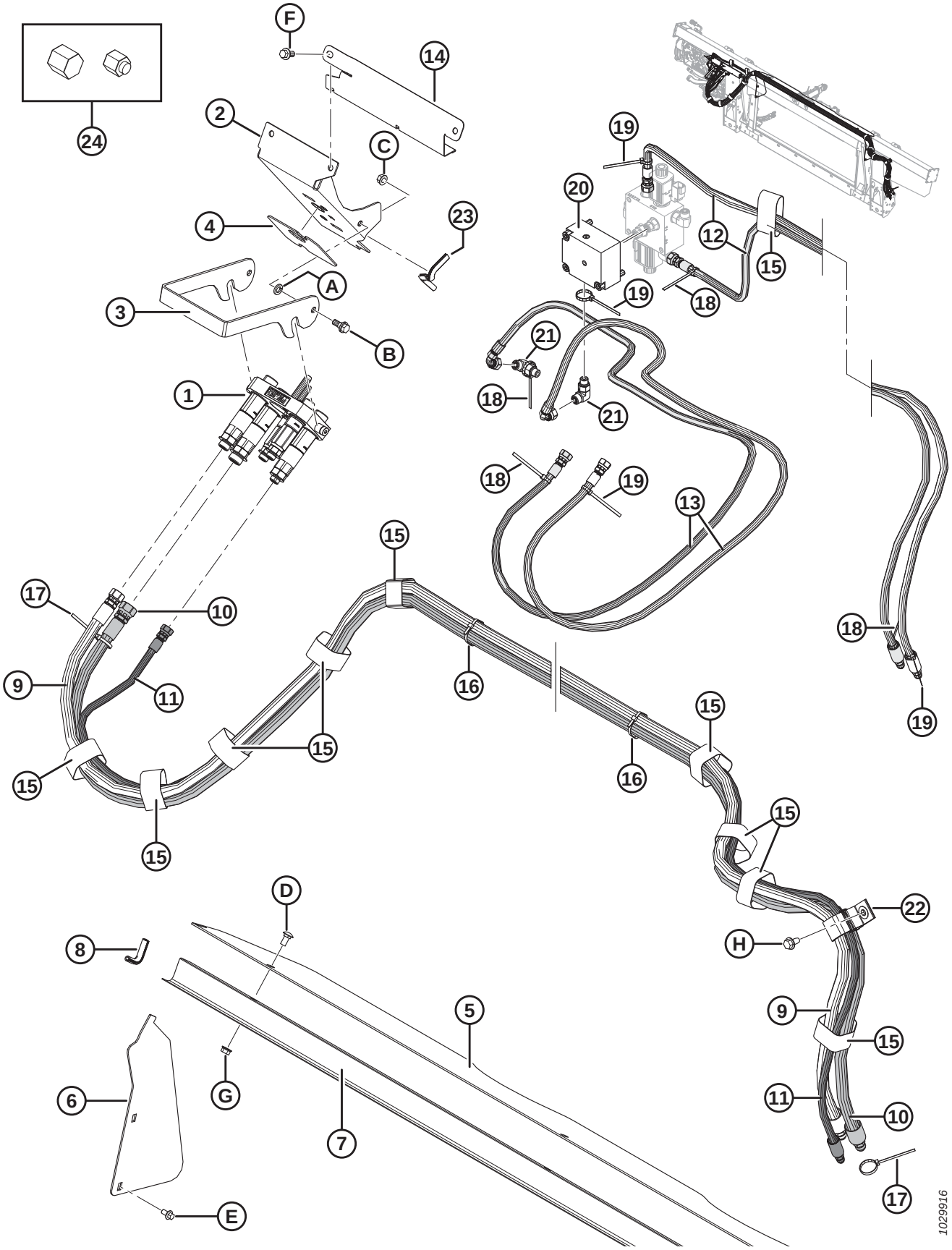

NOTE:

Some completion packages may have been shipped with a Parker multicoupler (not sold separately). Service parts for Parker multicouplers include plate assembly (MD #182182), three 1/2 inch female couplers (MD #184460), two 3/8 inch couplers (MD #191704), 1/2 inch seal kit (MD #129860), 3/8 inch seal kit (MD #129859), two fittings (MD #191705), fitting (MD #184461), fitting (MD #184463), two bushings (MD #182181), adapter fitting (MD #184462), and two screws (MD #184524). Parker multicoupler service parts are **NOT** interchangeable with Faster multicoupler (MD #279718) service parts. To replace the entire multicoupler, order Faster multicoupler (MD #279718).

Ref	Part Number	Description	Qty	Serial Number
1	279718	COUPLING – MULTI JD (FASTER)	1	
	294097	KIT – COUPLER PLATE ASSY, JD (FASTER) [477]		
	279011	KIT – COUPLER, 3/8 C/W 3/8 IN. FITTING, RED/GREEN (FASTER) [477]	2	
	279012	KIT – COUPLER, 9/16 C/W 5/8 IN. FITTING, YELLOW (FASTER) [477]	1	
	279013	KIT – COUPLER, 9/16 C/W 1/2 IN. FITTING, WHITE (FASTER) [477]	1	
	279014	KIT – COUPLER, 9/16 C/W 3/8 IN. FITTING, BLUE (FASTER) [477]	1	
	279034	SEAL – 3/8 COUPLER (FASTER) [477]		
	279035	SEAL – 9/16 COUPLER (FASTER) [477]		
2	213264	BRACKET – JD COUPLER	1	
3	248960	LATCH – COUPLER BRACKET	1	
4	129149	PAD – RUBBER	1	
5	276285	COVER – FEED AUGER, TOP	1	
6	276284	COVER – FEED AUGER, SIDE	2	
7	156725	COVER – HOSE	1	
8	42589	MOULDING	2	
9	287860	HOSE – HYD, REEL DR (JD)	1	
10	287312	HOSE – HYD, REEL DR (JD)	1	
11	287863	HOSE – HYD, REEL LIFT (JD)	1	
12	287861	HOSE – HYD, REEL FORE-AFT (JD)	2	
13	287862	HOSE – HYD, REEL FORE-AFT (JD)	2	
14	213965	COVER – HOSE	1	
15	135444	FASTENER – CINCH STRAP 6 IN. LG	11	
16	21763	FASTENER – CABLE TIE (BLACK)	3	
17	40701	FASTENER – CABLE TIE (YELLOW)	2	
18	40702	FASTENER – CABLE TIE (RED)	5	
19	49227	FASTENER – CABLE TIE (GREEN)	5	

477. Service part for Faster multicoupler (MD #279718) only. **NOT** interchangeable with Parker multicoupler (not sold separately) service parts.

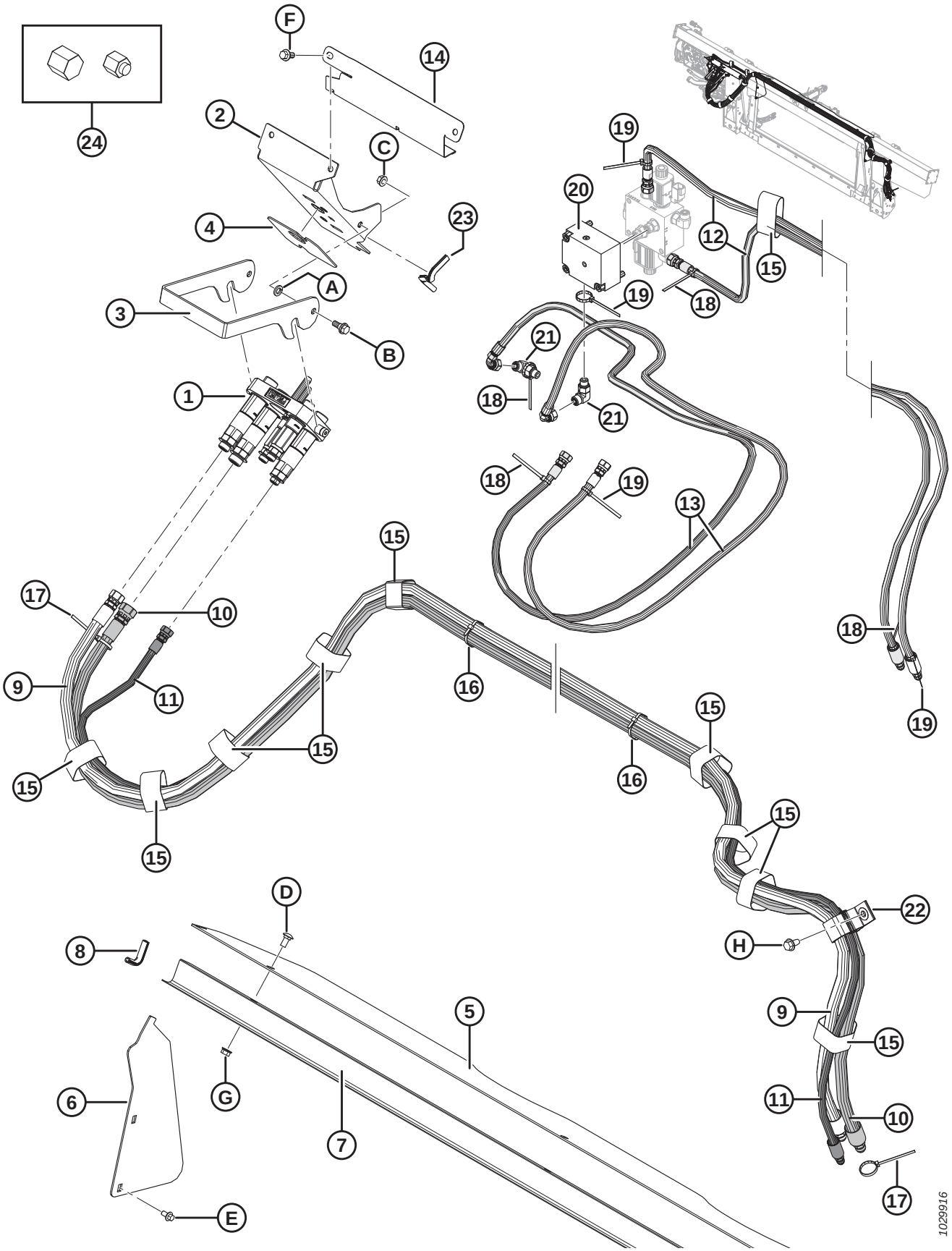
F
14
2
C
4
23
A
3
B
1
24
19
20
12
15
18
21
13
10
17
9
11
16
D
8
5
6
G
7
E
22
H
1029916

Ref	Part Number	Description	Qty	Serial Number
20	335342	VALVE – CHECK	1	
	279228	VALVE – CARTRIDGE, PO CHECK		
	163184	O-RING (2020 AND PRIOR) [478]		–396189
	320284	O-RING – 2.38 X 20.64		396190–
	220959	SEAL KIT		
	184711	WASHER – FLAT REG M10-200HV-AA1J		
21	136095	FITTING – ELBOW 90° HYD	2	
22	163598	STRAP – VELCRO, HANGING	1	
23	42074	MOULDING	1	
24	108233	CAP – 1/2 IN. TUBE (FOR SHIPPING ONLY)	2	
	30813	CAP – 3/8 IN. TUBE 37 DEG FLARE (FOR SHIPPING ONLY)	3	
A	18652	WASHER – REG. LOCK 7/16 IN. NOM. I.D. ZP		
B	27647	BOLT – SHOULDER		
C	30228	NUT – FLANGE DT SMTH FACE 0.375-16 UNC		
D	184657	BOLT – RHSSN M10 X 1.5 X 20-8.8-A3L		
E	136485	BOLT – HEX FLG HD TFL M8 X 1.25 X 16-8.8-A3L		
F	152655	BOLT – HEX FLG HD M10 X 1.5 X 20-8.8-A3L		
G	135799	NUT – HEX FLG CTR LOC M10 X 1.5-10-A3L		
H	136209	SCREW – HEX WASHER HD M10 X 1.5 X 20-450HV-A3L		

478. Service part only for units made in model year 2020 and prior. For units made in model year 2021 and later, or for units serviced with manifold MD #335342, order O-ring MD #320284.

146 John Deere 50 Series – Electrical Completion

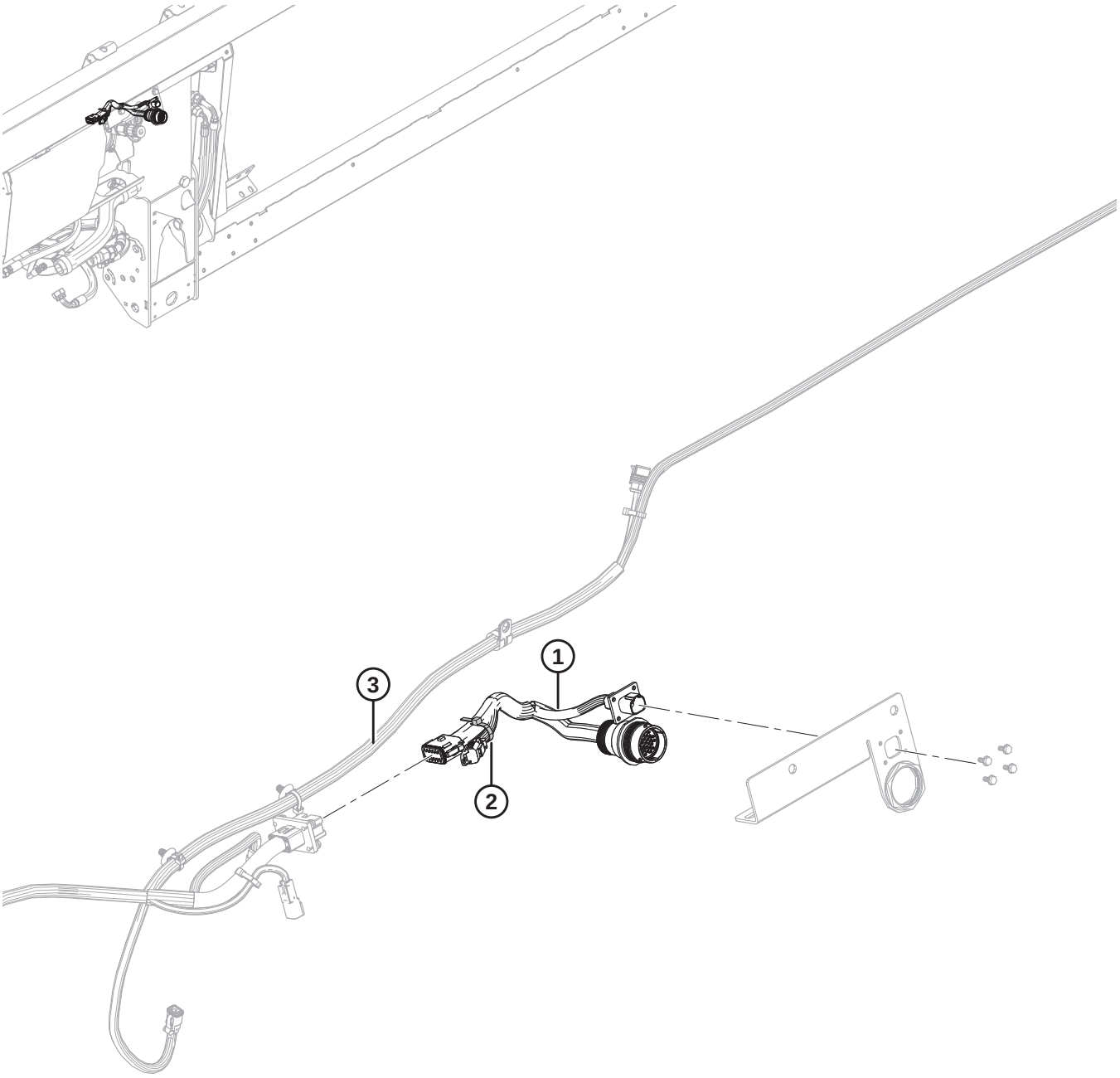

1033540

NOTE:

For specific electrical harness parts, refer to Electrical Connector Parts Catalog (MD #169641).

Ref	Part Number	Description	Qty	Serial Number
1	337168	HARNESS – FM100, COMP, JD50	1	
	134948	DUST CAP – DEUTSCH, HDP20	1	
	134746	CONNECTOR – CAP, PLUG, 12 WAY	1	
2	21763	FASTENER – CABLE TIE, BLACK	1	
3	REF	HARNESS – FM100, MAIN	1	

147 John Deere 60/70 S/T Series – Electrical Completion

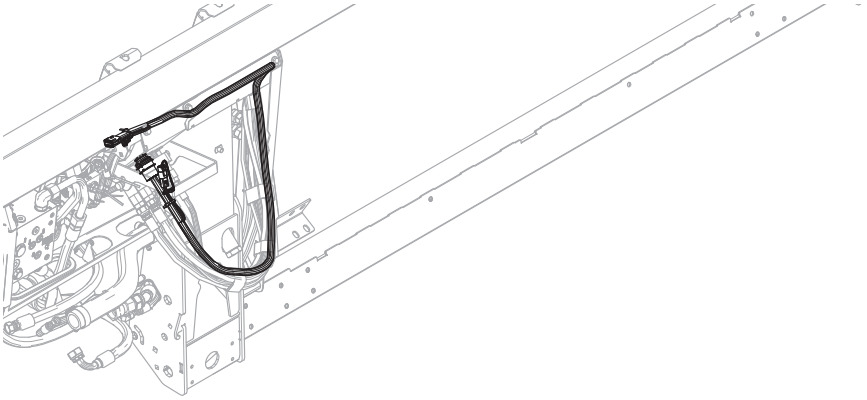

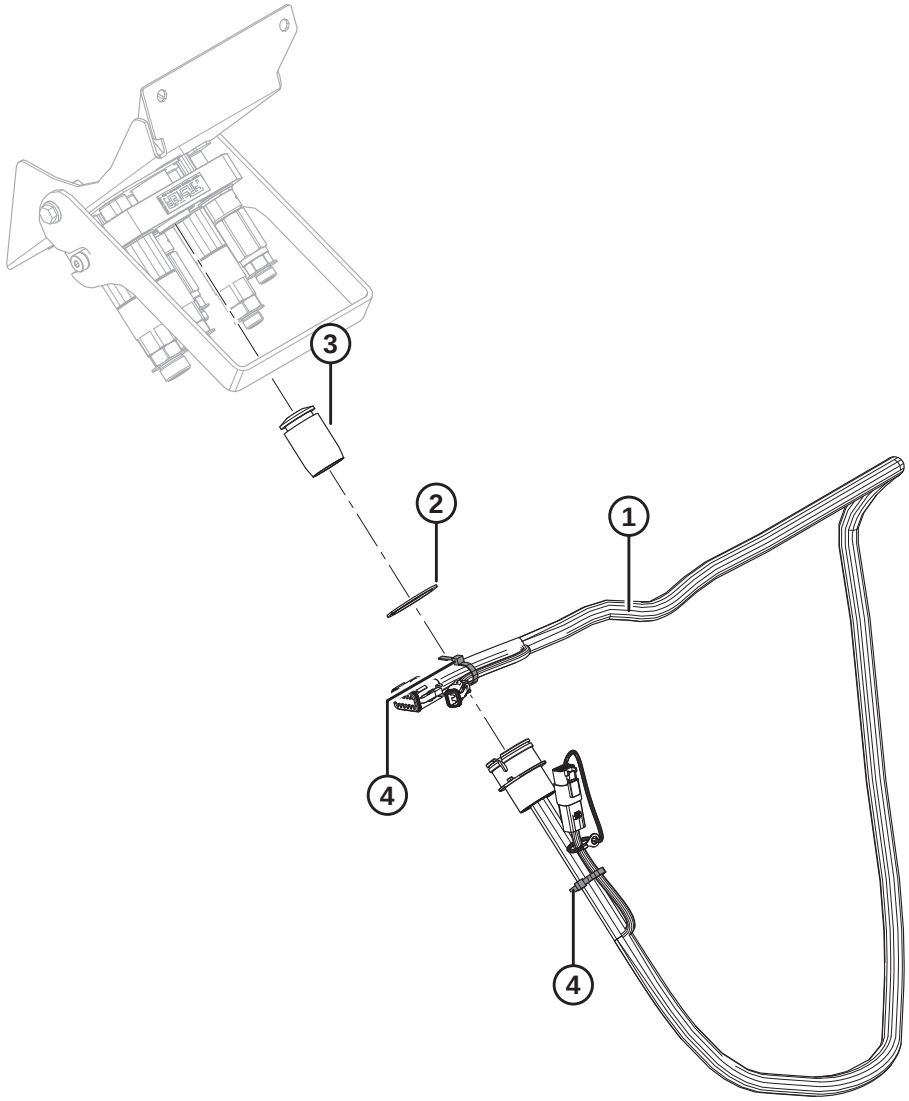

1020077

NOTE:

For specific electrical harness parts, refer to Electrical Connector Parts Catalog (MD #169641).

Ref	Part Number	Description	Qty	Serial Number
1	258107	HARNESS – FM100, COMPLETION, JOHN DEERE	1	
	134741	CAP – PLUG, DEUTSCH, DT, 2 POS.	1	
	134746	CONNECTOR – CAP, PLUG, 12-WAY	1	
2	135267	RING – INVERTED EXT RETAINING	1	
3	129148	PLUG – RUBBER	1	
4	21763	FASTENER – CABLE TIE (BLACK)	2	

148 Versatile – Float Module Completion

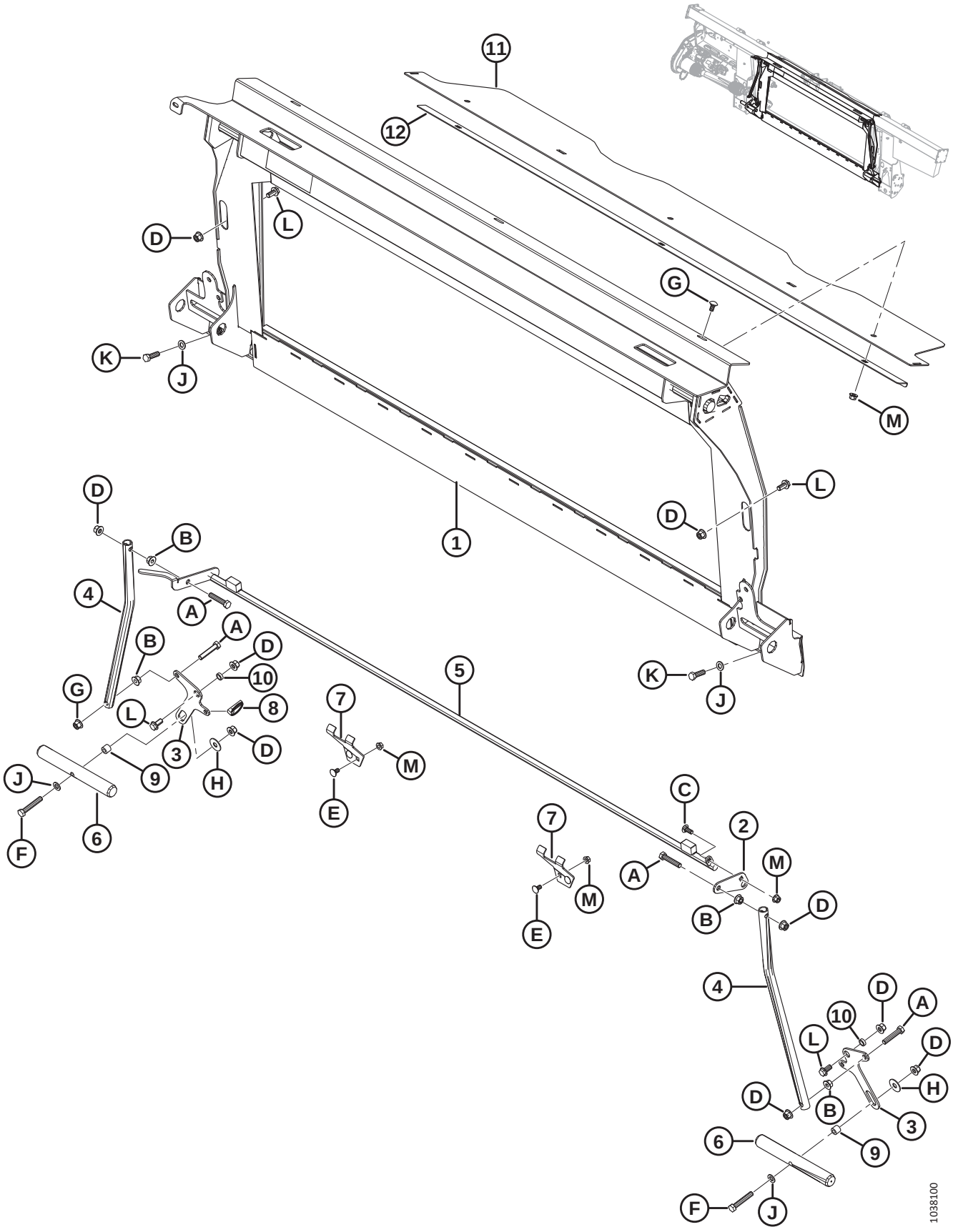

Ref	Part Number	Description	Qty	Serial Number
	B6961	**COMP PKG – VERSATILE** [479]		
1	**347077**	**FRAME – TRANSITION W/DECAL**	**1**	
2	**328582**	**LEVER**	**1**	
3	**347569**	**LEVER – PIVOT**	**2**	
4	156783	TUBE – LINK	2	
5	**337311**	**LATCH – TRANSFER WELDMENT**	**1**	
6	133138	SHAFT	2	
7	245246	SUPPORT – LOCK KEEPER	2	
8	**113561**	**PIN – LYNCH**	**1**	
9	**337043**	**BUSHING – M12 THREADED**	**2**	
10	133439	SPACER – 0.75 O.D. X 0.120 IN. WALL	2	
11	**328356**	**COVER – FEED AUGER TOP**	**1**	
12	**301629**	**RETAINER – DUST COVER**	**1**	
A	**237316**	**BOLT – HEX HD TFL M12 X 1.75 X 60-8.8-AA1J**		
B	**136036**	**NUT – HEX SM FLG M12 X 1.75-8-AA1J**		
C	**136506**	**BOLT – RHSSN M10 X 1.5 X 25-8.8-AA1J**		
D	**136431**	**NUT – HEX FLG CTR LOC M12 X 1.75-10-A3L**		
E	**136178**	**BOLT – RHSN M10 X 1.5 X 20-8.8-AA1J**		
F	**184675**	**BOLT – HEX HD M12 X 1.75 X 70-8.8-AA1J**		
G	**184657**	**BOLT – RHSSN M10 X 1.5 X 20-8.8-AA1J**		
H	32247	WASHER – FLAT		
J	184714	WASHER – FLAT REG M12-300HV-A3L		
K	184669	BOLT – HEX HD M12 X 1.75 X 40-8.8-A3L		
L	136625	BOLT – HEX SER FLG HD M12 X 1.75 X 25 X SPCL-100-AA1J		
M	**135799**	**NUT – HEX FLG CTR LOC M10 X 1.5-10**		

479. Versatile Completion Package includes float module, hydraulic, and electrical completion packages required to complete a stand-alone FM100 or to convert to an existing factory-installed FM100. Kits available through Whole Goods only.

149 Versatile – Hydraulic Completion

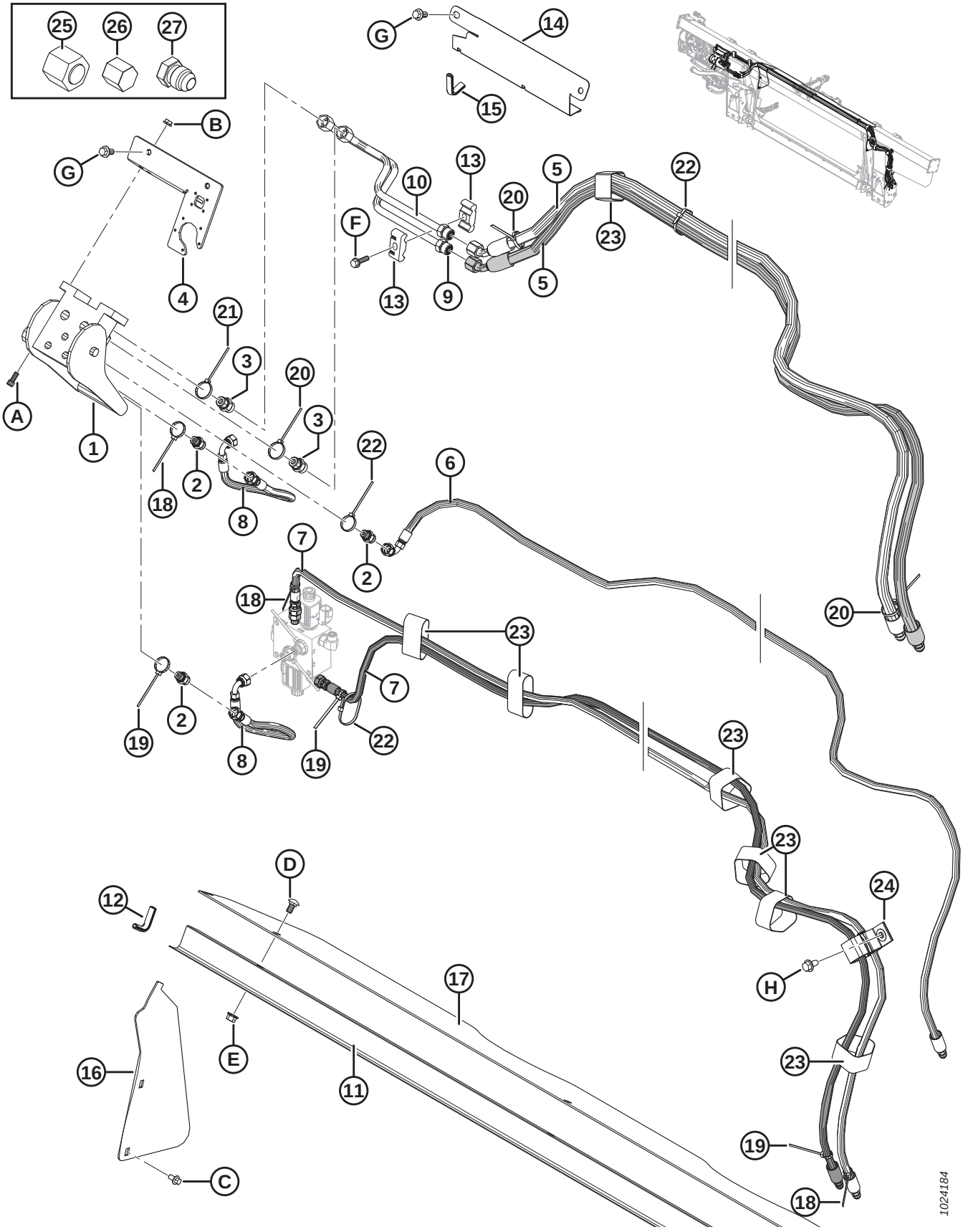

Ref	Part Number	Description	Qty	Serial Number
1	153151	COUPLING – MULTI	1	
	129800	COVER – KIT		
	129801	LATCH – BUTTON KIT		
	129976	COUPLING – 1/4 IN.		
	129977	COUPLING – 3/8 IN.		
2	252694	FITTING – ADAPTER, .052 ORIFICE	3	
	50219	O-RING – #6 ORB		
	135865	O-RING – #6 ORFS		
3	135780	FITTING – ADAPTER	2	
	44209	O-RING – #8 ORB		
	135866	O-RING – #8 ORFS		
4	301693	KIT – CNH ELECTRICAL COVER	1	
5	213182	HOSE – HYD, REEL DRIVE	2	
6	213184	HOSE – HYD, REEL LIFT	1	
7	213350	HOSE – HYD, REEL FORE-AFT	2	
8	213354	HOSE – HYD, FORE-AFT	2	
9	213204	LINE – REEL DRIVE PRESS	1	
10	213205	LINE – REEL DRIVE RETURN	1	
11	156725	COVER – HOSE	1	
12	42589	MOULDING	2	
13	37167	CLAMP	2	
14	213965	COVER – HOSE (2016–PRIOR)	1	–301189
15	194082	MOULDING (2016–PRIOR)	1	–301189
16	276284	COVER – FEED AUGER, SIDE	2	
17	276285	COVER – FEED AUGER, TOP	1	
18	49227	FASTENER – CABLE TIE (GREEN)	3	
19	40702	FASTENER – CABLE TIE (RED)	3	
20	40701	FASTENER – CABLE TIE (YELLOW)	3	
21	49232	FASTENER – CABLE TIE (WHITE)	1	
22	21763	FASTENER – CABLE TIE (BLACK)	7	
23	135444	FASTENER – CINCH STRAP 6 IN. LG	7	
24	163598	STRAP – VELCRO, HANGING	1	
25	136325	CAP – HYD SAE-6 ORFS	1	
26	108233	CAP – 1/2 IN. TUBE (FOR SHIPPING ONLY)	2	
	30813	CAP – 3/8 IN. TUBE 37 DEG FLARE (FOR SHIPPING ONLY)	3	
27	50178	PLUG – 3/8 IN. TUBE (FOR SHIPPING ONLY)	4	
A	135397	BOLT – SOCKET HD (HEX) 5/16 NC X 3/4		
B	30280	NUT – FLG SIDE LK SMTH FACE 5/16 NC GR 5 ZP		
C	136485	BOLT – HEX FLG HD TFL M8 X 1.25 X 16-8.8-A3L		
D	184657	BOLT – RHSSN M10 X 1.5 X 20-8.8-A3L		
E	135799	NUT – HEX FLG CTR LOC M10 X 1.5-10-A3L		
F	252655	BOLT – HEX HD TFL M8 X 1.25 X 30-8.8-A3L		

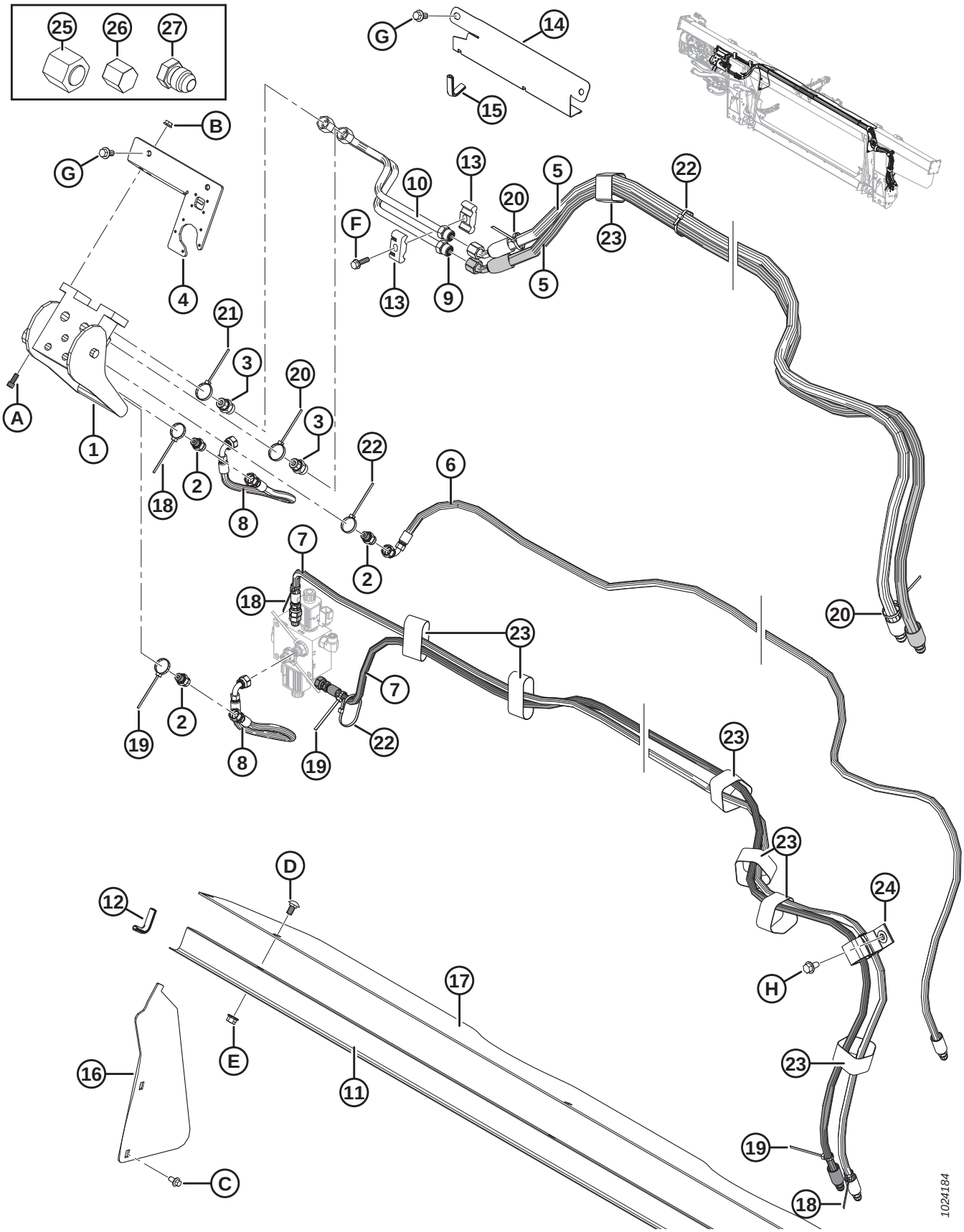
25
26
27
G
14
15
B
G
10
13
20
5
22
F
23
13
9
5
4
21
3
20
3
A
1
18
2
8
22
6
2
7
18
20
23
7
19
2
8
19
22
23
23
D
24
12
17
H
E
16
11
23
19
C
18
1024184

Ref	Part Number	Description	Qty	Serial Number
G	152655	BOLT – HEX FLG HD M10 X 1.5 X 20-8.8-A3L		
H	136209	SCREW – HEX WASHER HD M10 X 1.5 X 20-450HV-A3L		

150 Versatile – Electrical Completion

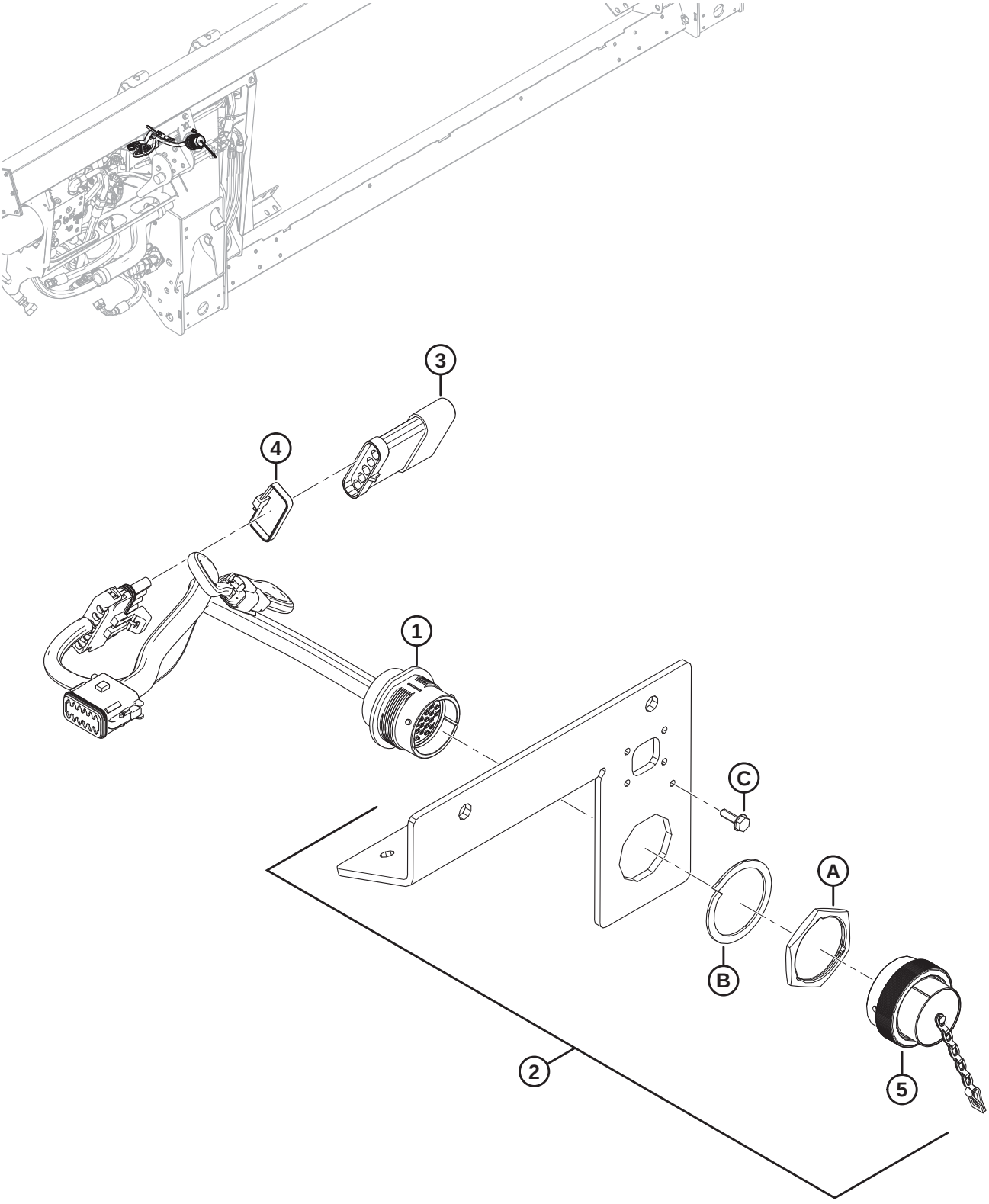

NOTE:

For specific electrical harness parts, refer to Electrical Connector Parts Catalog (MD #169641).

Ref	Part Number	Description	Qty	Serial Number
1	213211	HARNESS – FM100, COMPLETION	1	
	134746	CONNECTOR – CAP, PLUG, 12-WAY	1	
2	301693	KIT – CNH ELECTRICAL COVER	1	
3	153933	RESISTOR – HEADER RECOGNITION	1	
4	30753	FASTENER – CABLE TIE (BLACK)	1	
5	134053	CAP – PLUG, HD30, SIZE 24	1	
A	134010	NUT – PANEL, HD30, SIZE 24		
B	134011	WASHER – LOCK SPRING, DEUTSCH HD, SIZE 24		
C	21947	SCREW – SELF TAPPING HEX WASH HD #10 X 5/8 ZP		

151 Auger Conversion Kits – Fingers and Flighting

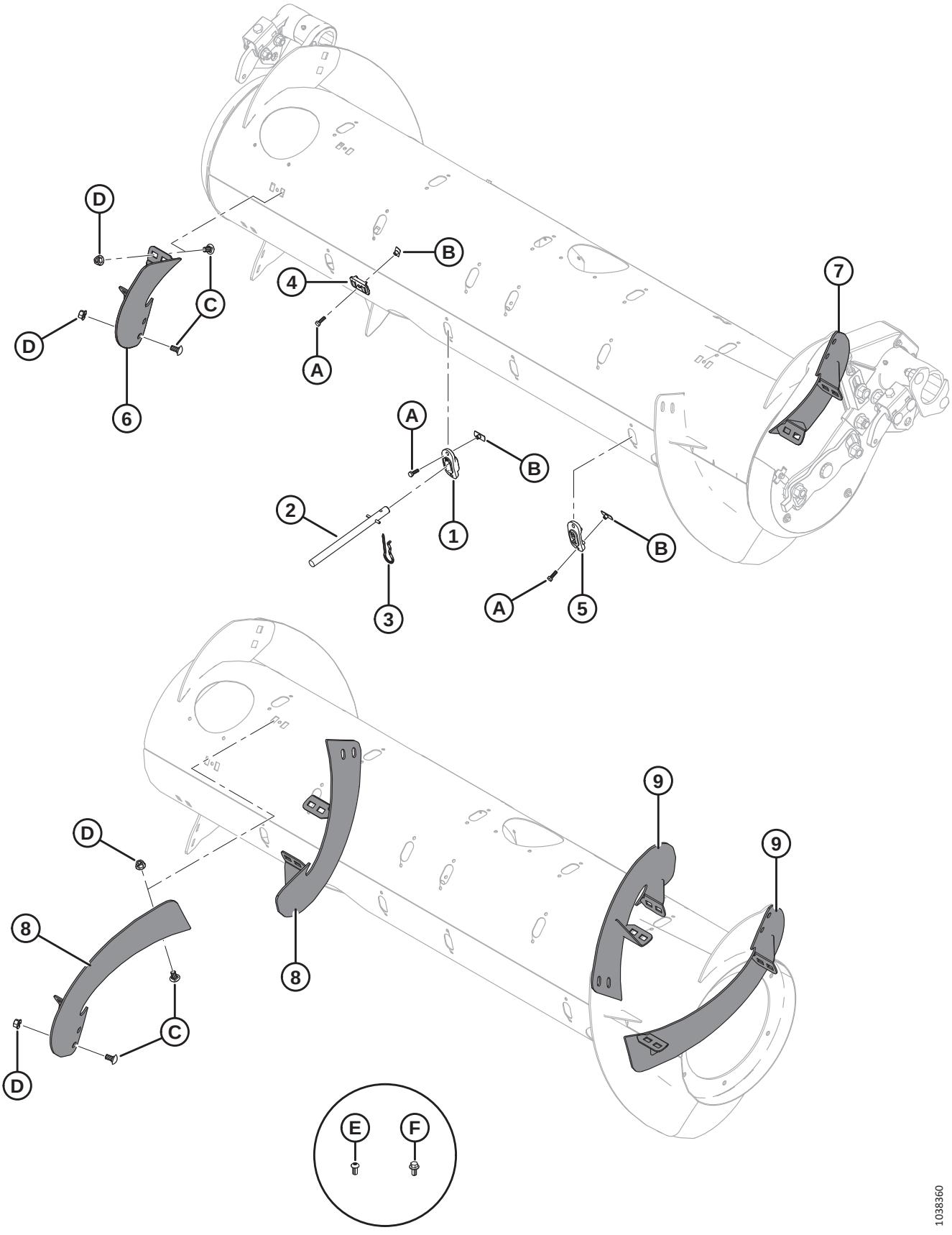

AUGER CONVERSION KITS – FINGERS AND FLIGHTING

Ref	Part Number	Description	Qty	Serial Number
	B7343	**KIT – FEED AUGER FINGERS, 4 PCS** [480]		
	B7344	**KIT – FLIGHTING, SHORT HI-WEAR** [481]		
	B7345	**KIT – FLIGHTING, LONG HI-WEAR** [482]		
	357233	**KIT – FLIGHTING, SHORT HI-WEAR** [483]		
	357234	**KIT – FLIGHTING, LONG HI-WEAR** [484]		
1	337143	GUIDE	4	
2	337152	KIT – FINGER [485]	4	
3	123180	PIN – HAIR	4	
4	213084	PLUG – FLIGHTING SLOT	4	
5	187137	PLUG [486]		
6	287887	FLIGHTING, RTD – RH, MED (HI WEAR)	1	
7	287888	FLIGHTING, RTD – LH, MED (HI WEAR)	1	
8	287890	FLIGHTING, RTD – RH, LONG(HI WEAR)	2	
9	287889	FLIGHTING, RTD – LH, LONG(HI WEAR)	2	
A	252703	BOLT – HEX HD TFL M6 X 1 X 20 X SPCL-12.9-AA2L		
B	197263	NUT – TEE M6 X 1		
C	136178	BOLT – RHSN M10 X 1.5 X 20-8.8-AA1J		
D	135799	NUT – HEX FLG CTR LOC M10 X 1.5-10-A3L		
E	135723	SCREW – HEX SOC BTN HD M10 X 1.5 X 20-10.9-AA1J [487]		
F	152655	BOLT – HEX FLG HD M10 X 1.5 X 20-8.8-AA1J [488]		

480. Includes four solid fingers (MD #337152), guides (MD #337143), hair pins (MD #123180), flighting slots plugs (MD #213084), and hardware. Kits available through Whole Goods only.
481. Includes one pair of short flighting (MD #287887 and 287888), four flighting slots plugs (MD #213084), four plugs (MD #187137), and hardware. Kits available through Whole Goods only.
482. Includes two pairs of long flighting (MD #287889 and 287890), twelve plugs (MD #187137), and hardware. Kits available through Whole Goods only.
483. Includes one pair of short flighting (MD #287887 and 287888), four flighting slots plugs (MD #213084), four plugs (MD #187137), hardware, and instructions.
484. Includes two pairs of long flighting (MD #287889 and 287890), twelve plugs (MD #187137), hardware, and instructions.
485. Includes solid finger (not sold separately), spring pin (MD #7642), guide (MD #337143), and instructions.
486. Quantities: B7344 = 4; B7345 = 12
487. For Ultra Narrow Configuration only; used on the new holes drilled in the flighting.
488. For Ultra Narrow Configuration only; used on the new holes drilled in the feed auger.

152 FM100 on D65 Conversion Kit

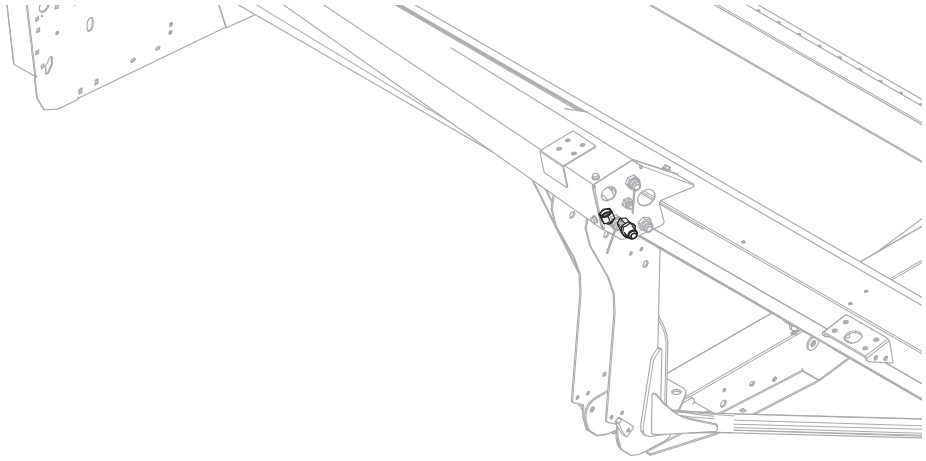

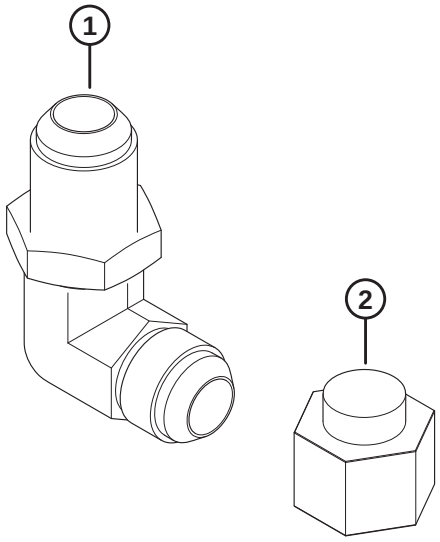

1024679

FM100 ON D65 CONVERSION KIT

Ref	Part Number	Description	Qty	Serial Number
	295703	KIT – FM100 ON D65 [489]		
1	252210	FITTING – ELBOW	1	
2	30999	CAP – 3/4 IN. TUBE 37 DEG FLARE	1	

489. Draper header conversion kit for installing an FM100 in a D65. Kit includes all listed parts and instructions.

153 Gear Pump Conversion Kits

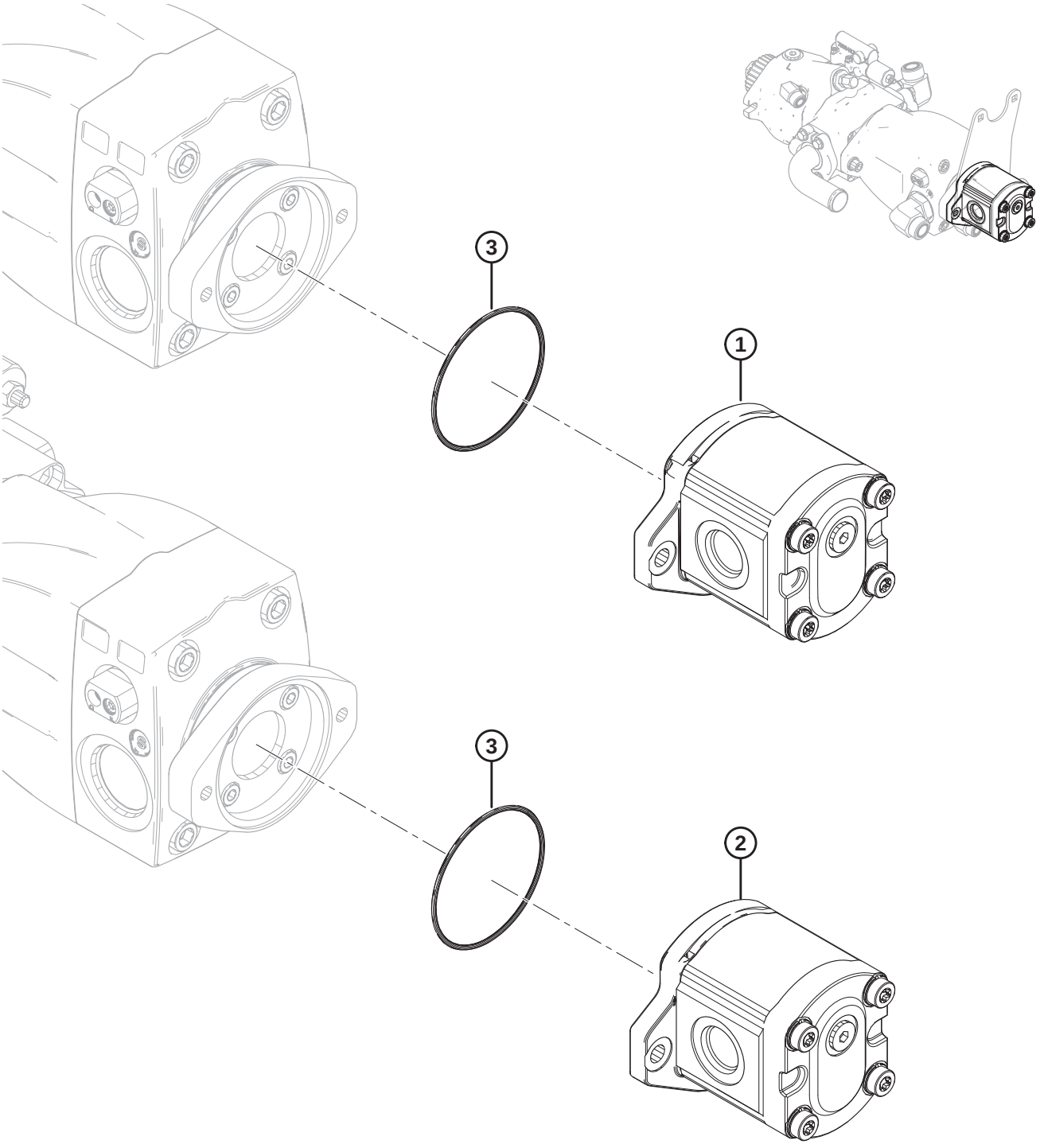

GEAR PUMP CONVERSION KITS

Ref	Part Number	Description	Qty	Serial Number
	B6193	KIT – PUMP CONVERSION (CNH/CLAAS) [490]		
	B6194	KIT – PUMP CONVERSION (JD/AGCO/GLEANER) [491]		
1	187252	PUMP – GEAR, 16 CC, CASAPPA (CNH/CLAAS)	1	
	187918	SEAL KIT – GEAR PUMP		
2	295998	PUMP – GEAR, 19 CC, CASAPPA (JD/AGCO/GLEANER)	1	
	187918	SEAL KIT – GEAR PUMP		
3	136024	O-RING	1	

490. Includes gear pump (MD #187252) and O-ring (MD #136024). Kits available through Whole Goods only.
491. Includes gear pump (MD #295998) and O-ring (MD #136024). Kits available through Whole Goods only.

154 Gear Set Conversion Kits

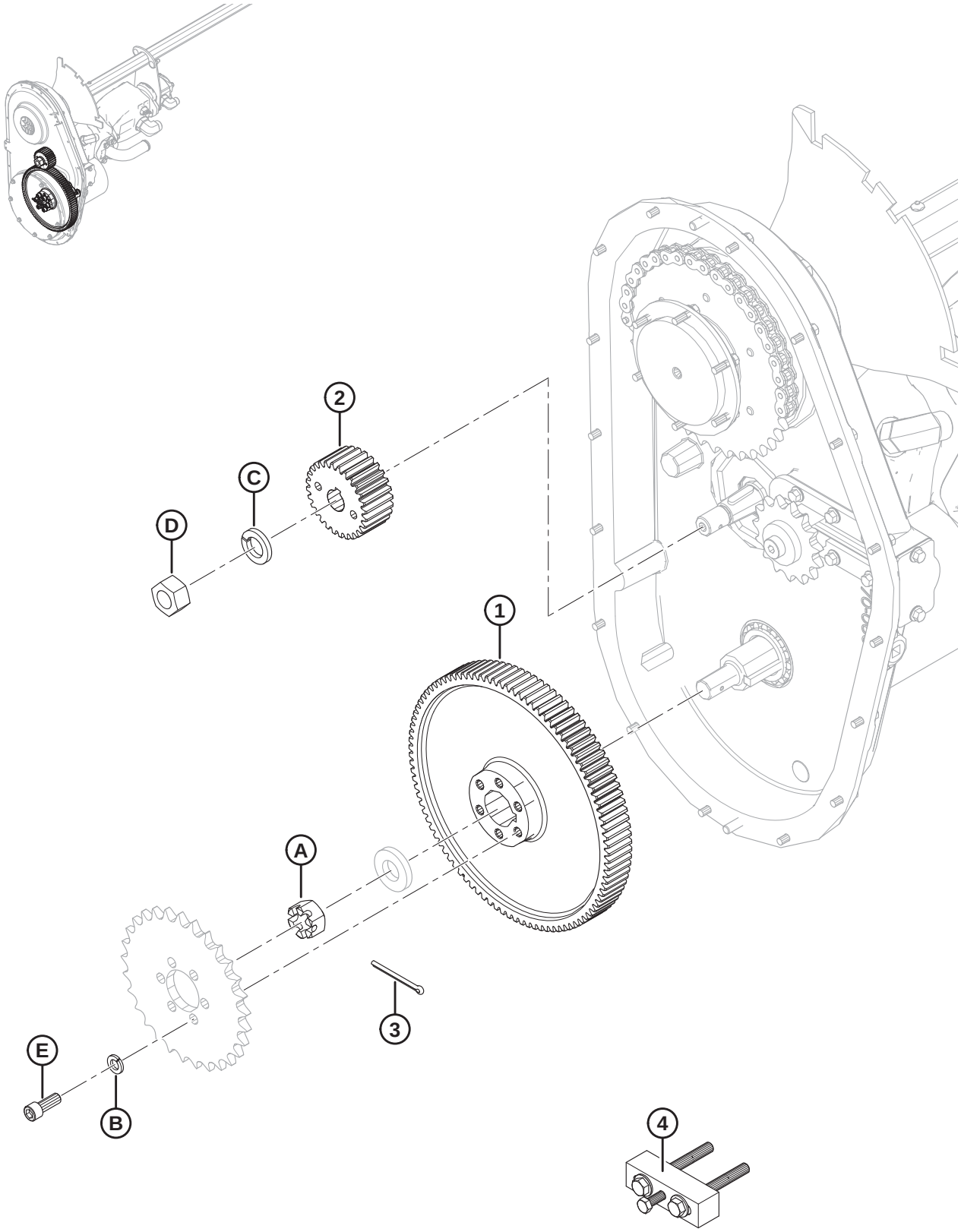

GEAR SET CONVERSION KITS

Ref	Part Number	Description	Qty	Serial Number
	B6191	KIT – GEARSET 89/36 (CLAAS/AGCO/GLEANER) [492]		
	B6192	KIT – GEARSET 97/28 (CNH/JD) [493]		
1	276353	GEAR – 89 TEETH	1	
	187480	GEAR – 97 TEETH	1	
2	276352	GEAR – PINION 36 TEETH 2.5 MODULE	1	
	276859	GEAR – PINION 28 TEETH 2.5 MODULE	1	
3	135358	PIN – COTTER, 5/32 DIA X 2.0 ZP	1	
4	304800	TOOL ASSEMBLY – GEAR PULLER [494]	1	
A	5512	NUT – HEX SLOTTED .750-16 UNF ZN PL		
B	18637	WASHER – REG. LOCK 3/8 IN. NOM. I.D. ZP		
C	18640	WASHER – REG. LOCK 3/4 IN. NOM. I.D. ZP		
D	18720	NUT – HEX 3/4-16 UNF GR 5 ZN PL		
E	135381	SCREW – HEX SOC HD		

492. Includes 89-tooth gear (MD #276353), 36–tooth pinion gear (MD #276352), cotter pin (MD #135358), gear puller tool (MD #304800), and hardware. Kits available through Whole Goods only.
493. Includes 97-tooth gear (MD #187480), 28-tooth pinion gear (MD #276859), cotter pin (MD #135358), gear puller tool (MD #304800), and hardware. Kits available through Whole Goods only.
494. Includes two washers (MD #18598), two bolts (MD #30035), bolt (MD #50072), and instructions.

155 Sprocket and Chain Conversion Kit

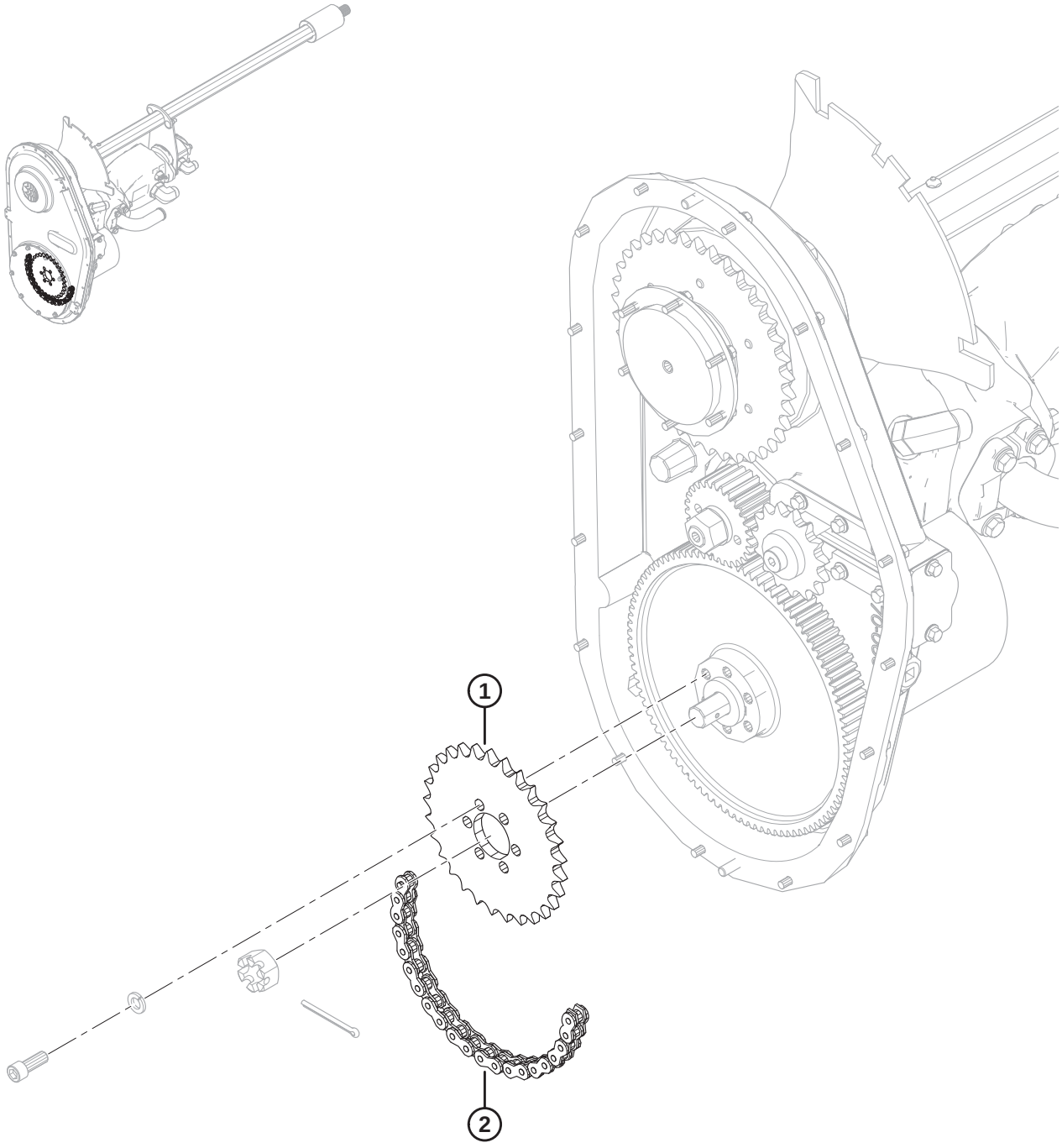

1027782

SPROCKET AND CHAIN CONVERSION KIT

Ref	Part Number	Description	Qty	Serial Number
	B6195	KIT – SPROCKET/CHAIN (CNH/AGCO/GLEANER) [495]		
1	231389	SPROCKET – 50A29	1	
2	231534	ROLLER CHAIN – RC 50 (78 PITCHES ENDLESS)	1	

495. Sprocket/Chain kit is used to convert float modules configured for John Deere/CLAAS Lexion combines to CNH/AGCO combines. Kits available through Whole Goods only.

156 AGCO Challenger/Massey Ferguson Conversion Kit

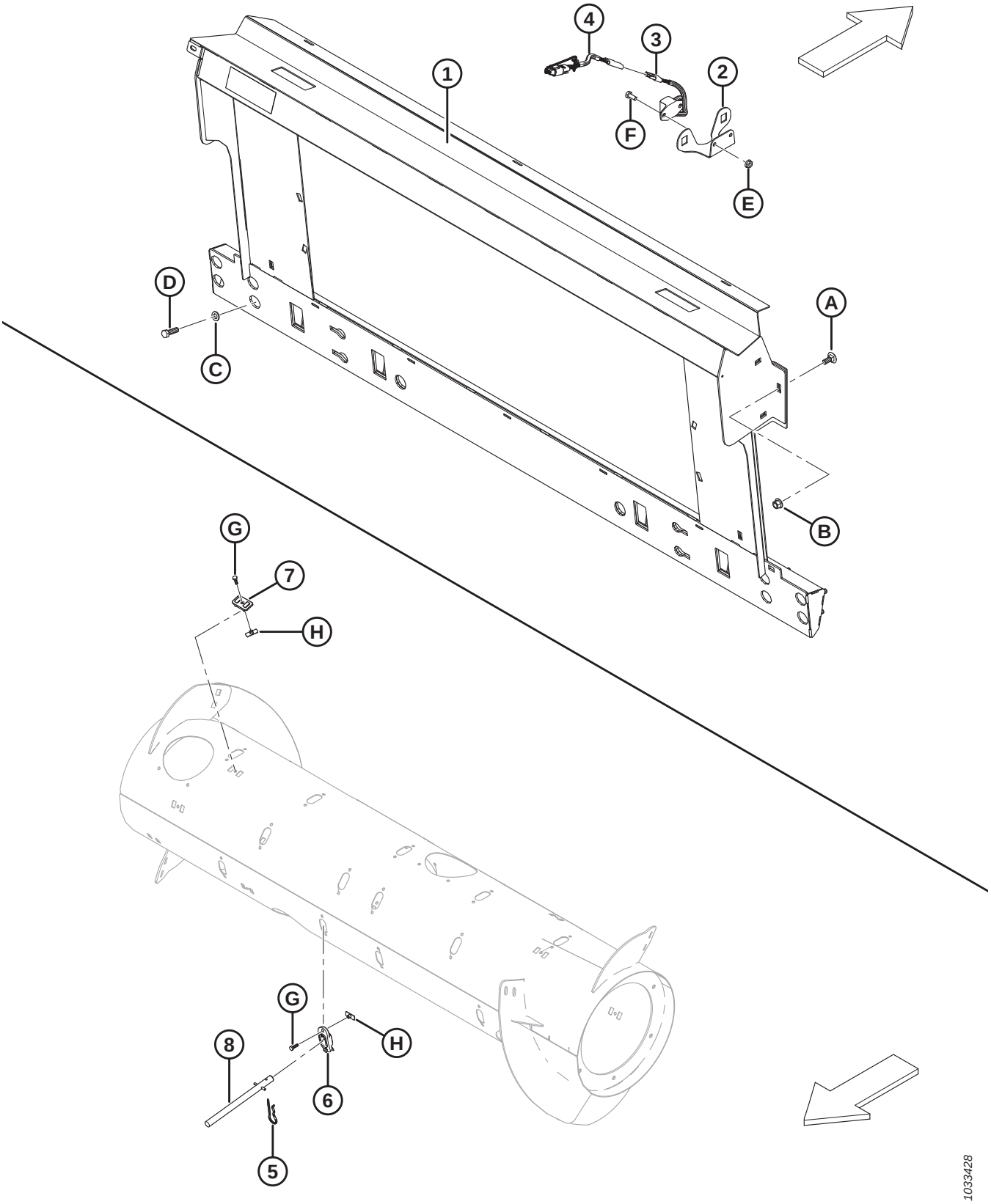

AGCO CHALLENGER/MASSEY FERGUSON CONVERSION KIT

Ref	Part Number	Description	Qty	Serial Number
	B6881	KIT – MASSEY/CHALLENGER CONVERSION [496]	1	
1	133672	FRAME – AGCO TRANSITION LATERAL TILT C/W DECAL	1	
2	279746	SUPPORT – REEL SPEED SENSOR	1	
3	152736	SENSOR – SPEED, 3-WIRE (CHALLENGER/MASSEY)	1	
4	220572	HARNESS – WIRING REEL SPEED SENSOR	1	
5	123180	PIN – HAIR	8	
6	337143	GUIDE	8	
7	213084	PLUG – FLIGHTING SLOT	8	
8	337152	KIT – FINGER [497]	8	
	7642	PIN – SPRING 3/16 DIA X 1.5 LG		
A	184667	BOLT – RHSN M12 X 1.75 X 30-8.8-A3L		
B	136431	NUT – HEX FLG CTR LOC M12 X 1.75-10-A3L		
C	184714	WASHER – FLAT REG M12-300HV-A3L		
D	152730	BOLT – HEX HD TFL M12 X 1.75 X 35-10.9-AA1J		
E	21455	NUT – FLG (SER FACE) 1/4 NC GR 5 ZP		
F	21572	BOLT – HEX HD 1/4 NC X 0.625 LG GR 5 ZP		
G	252703	BOLT – HEX HD TFL M6 X 1 X 20 X SPCL-12.9-AA2L		
H	197263	NUT – TEE M6 X 1		

496. Kits available through Whole Goods only.
497. Includes solid finger (not sold separately), spring pin (MD #7642), guide (MD #337143), and instructions.

157 AGCO Gleaner Conversion Kit

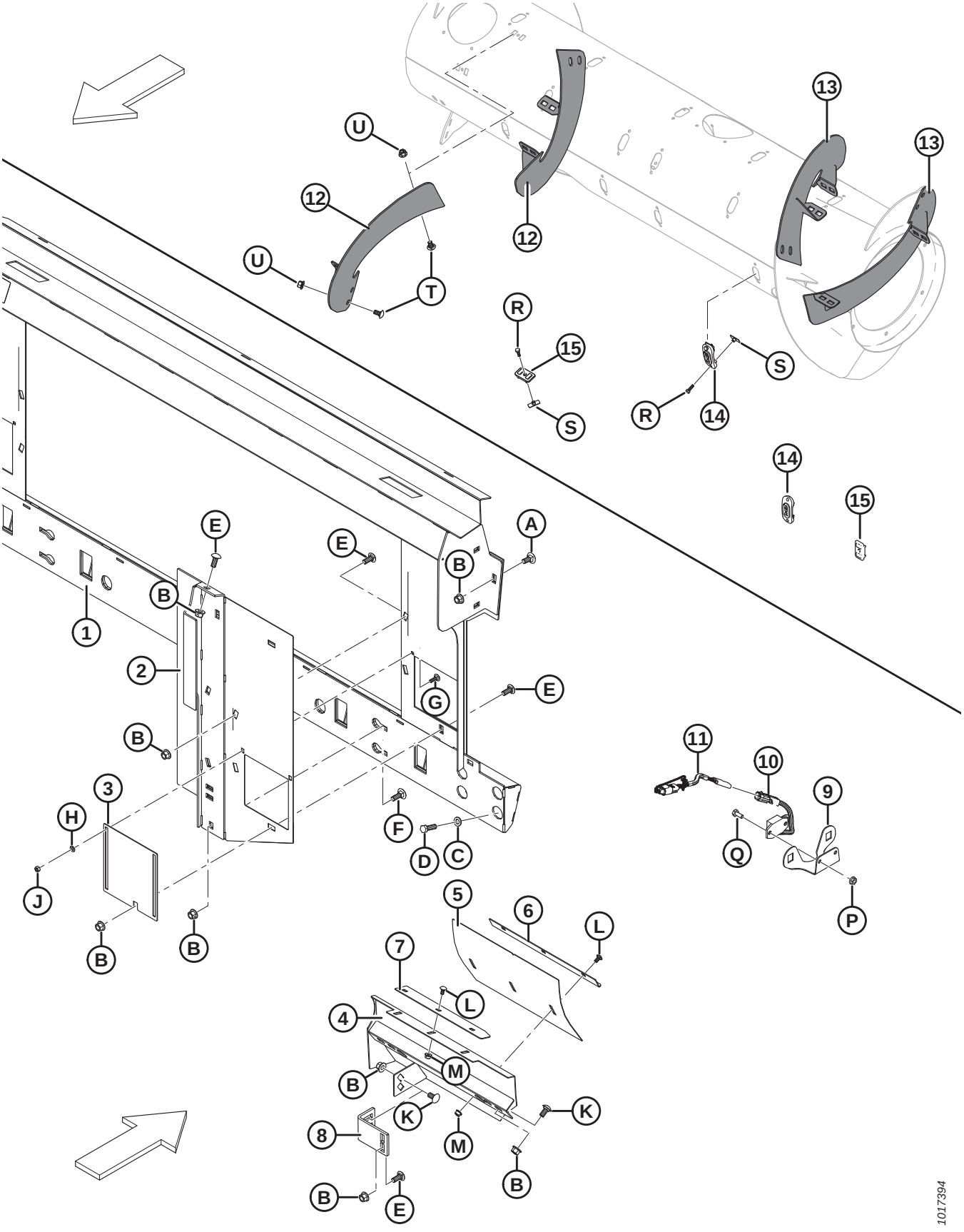

Ref	Part Number	Description	Qty	Serial Number
	B6958	KIT – GLEANER TRANSITION FRAME CONVERSION [498]		
1	245852	FRAME – GLEANER R/S C/W DECAL	1	
2	245815	FILLER – LH WELDMENT	1	
	245816	FILLER – RH WELDMENT	1	
3	245763	DOOR – ACCESS	2	
4	213833	DEFLECTOR – WELDT LH GLEANER	1	
	213834	DEFLECTOR – WELDT RH GLEANER	1	
5	213843	DEFLECTOR – ADJUSTING PANEL	2	
6	213844	ANGLE – STRIPPER	2	
7	213845	STRIPPER	2	
8	276289	FILLER BRACKET	2	
9	279746	SUPPORT – REEL SPEED SENSOR	1	
10	184440	SENSOR – SPEED, 2-WIRE (GLEANER)	1	
11	220572	HARNESS – WIRING REEL SPEED SENSOR	1	
12	287890	FLIGHTING, RTD – RH, LONG (HIWEAR)	2	
13	287889	FLIGHTING, RTD – LH, LONG (HIWEAR)	2	
14	187137	PLUG	12	
15	213084	PLUG – FLIGHTING SLOT	4	
A	184667	BOLT – RHSN M12 X 1.75 X 30-8.8-A3L		
B	50186	NUT – FLG LK SM FACE DT 1/2-13 UNC-GR5-AA1J		
C	184714	WASHER – FLAT REG M12-300HV-A3L		
D	152730	BOLT – HEX HD TFL M12 X 1.75 X 35-10.9-AA1J		
E	21868	BOLT – RHSSN 1/2-13 X 1.0 GR5 AA1J		
F	21471	BOLT – RHSN 1/2-13 X 1.25 GR5 AA1J		
G	21282	BOLT – RHSN 5/16-18 X 1-GR5-AA1J		
H	184572	WASHER – USS FLAT 1/4 IN. NOM		
J	18589	NUT – HEX 5/16-18 UNC GR 5 ZP		
K	152439	BOLT – RHSSN M12 X 1.75 X 25-8.8-A3L		
L	191489	BOLT – RHSSN TFL M8 X 1.25 X 16-8.8-A2L		
M	135337	NUT – HEX FLG CTR LOC M8 X 1.25-8-A2L		
P	21455	NUT – FLG (SER FACE) 1/4 NC GR 5 ZP		
Q	21572	BOLT – HEX HD 1/4 NC X 0.625 LG GR 5 ZP		
R	252703	BOLT – HEX HD TFL M6 X 1 X 20 X SPCL-12.9-AA2L		
S	197263	NUT – TEE M6 X 1		
T	184657	BOLT – RHSSN M10 X 1.5 X 20-8.8-A3L		
U	135799	NUT – HEX FLG CTR LOC M10 X 1.5-10-A3L		

498. Kits available through Whole Goods only.

158 AGCO IDEAL™ Conversion Kit

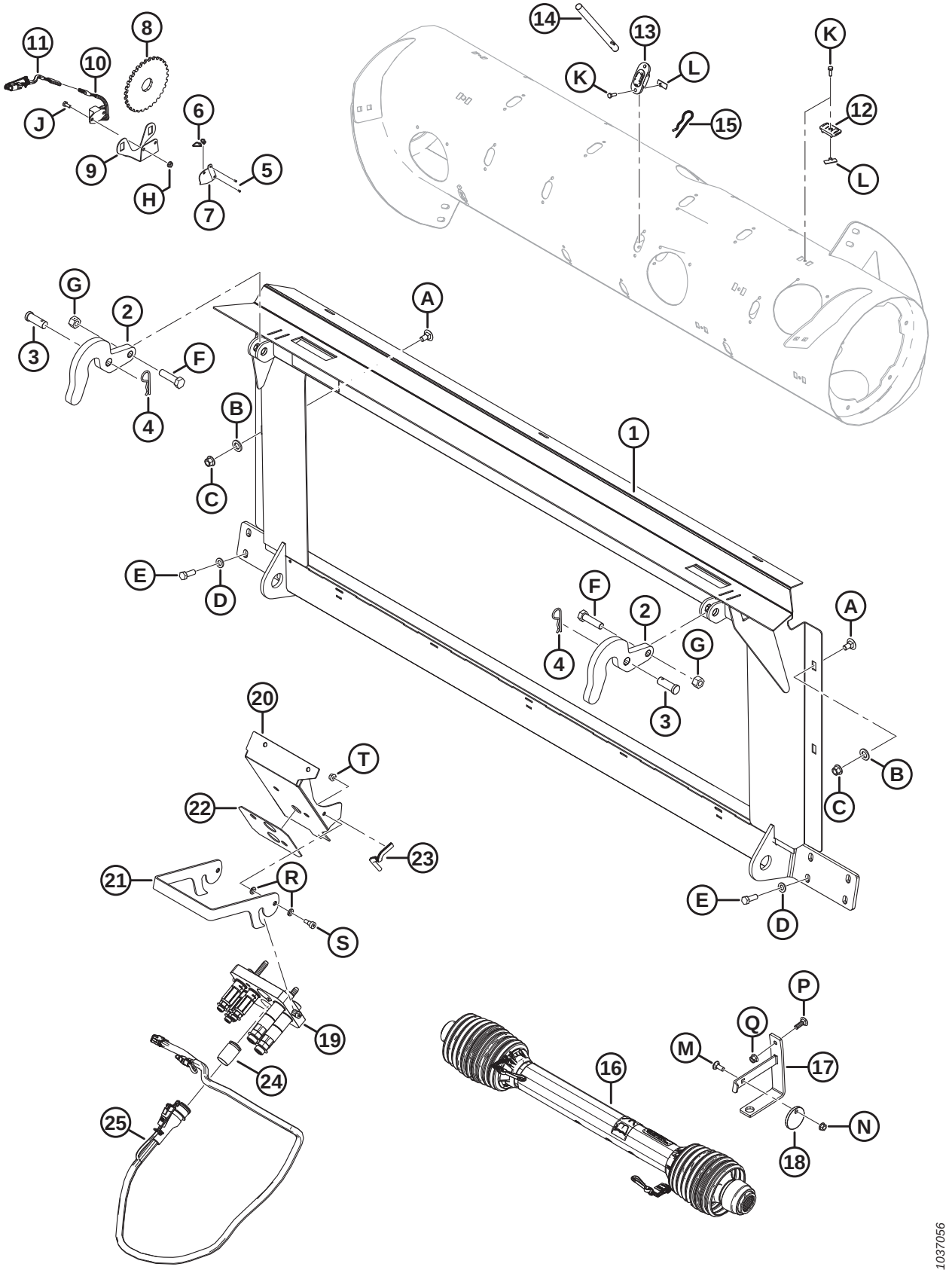

Ref	Part Number	Description	Qty	Serial Number
	B6882	KIT – AGCO IDEAL 7/8/9 CONVERSION [499]		
1	314678	FRAME – IDEAL TRANSITION W/ DECAL	1	
2	301451	SUPPORT – HOOK	2	
3	158080	PIN – CLEVIS	2	
4	13125	PIN – HAIR	2	
5	14338	RIVET – BLIND 1/8 X .125	2	
6	16661	FASTENER – CABLE TIE, BLACK	2	
7	164131	SHIELD – REEL SPEED SENSOR HARNESS	1	
8	133997	DISC – REEL SPEED SENSOR	1	
9	279746	SUPPORT – REEL SPEED SENSOR	1	
10	152736	SENSOR – SPEED, AGCO (3-WIRE)	1	
11	220572	HARNESS – WIRING AGCO REEL SPEED SENSOR	1	
12	213084	PLUG – FLIGHTING SLOT	8	
13	337143	GUIDE	8	
14	337152	KIT – FINGER [500]	8	
	7642	PIN – SPRING 3/16 DIA X 1.5 LG		
15	123180	PIN – HAIR	8	
16	314306	DRIVELINE – 1 3/4-20 SPL IDEAL [501]	1	
17	133166	BRACKET – DRIVELINE HANGER-WELDT	1	
18	133165	DISC – LOCK, DRIVELINE	1	
19	335008	COUPLING – MULTI, AGCO 5-POS	1	
	294394	KIT – COUPLER PLATE ASSY, AGCO		
	279011	KIT – COUPLER, 3/8 C/W 3/8 IN. FITTING		
	279012	KIT – COUPLER, 9/16 C/W 5/8 IN. FITTING		
	279034	SEAL – 3/8 COUPLER		
	279035	SEAL – 9/16 COUPLER		
	184461	FITTING – ADAPTER HYD	2	
	44210	O-RING – #10 ORB		
	135867	O-RING – #10 ORFS		
20	335059	BRACKET – AGCO IDEAL COUPLER	1	
21	337980	LATCH – MULTICOUPLER	1	
22	302030	PAD – RUBBER	1	
23	42074	MOULDING	1	
24	129148	PLUG – RUBBER	1	
25	311707	HARNESS – FM100 COMPLETION, IDEAL	1	
A	135903	BOLT – RHSN M12 X 1.75 X 25-8.8-AA1J		
B	184717	WASHER – FLAT REG M16-200HV-AA1J		
C	136431	NUT – HEX FLG CTR LOC M12 X 1.75-10		
D	184714	WASHER – FLAT REG M12-300HV		

499. Kits available through Whole Goods only.
500. Includes solid finger (not sold separately), spring pin (MD #7642), guide (MD #337143), and instructions.
501. For service parts, refer to Section *111 Input Driveline and Support, page 339*.

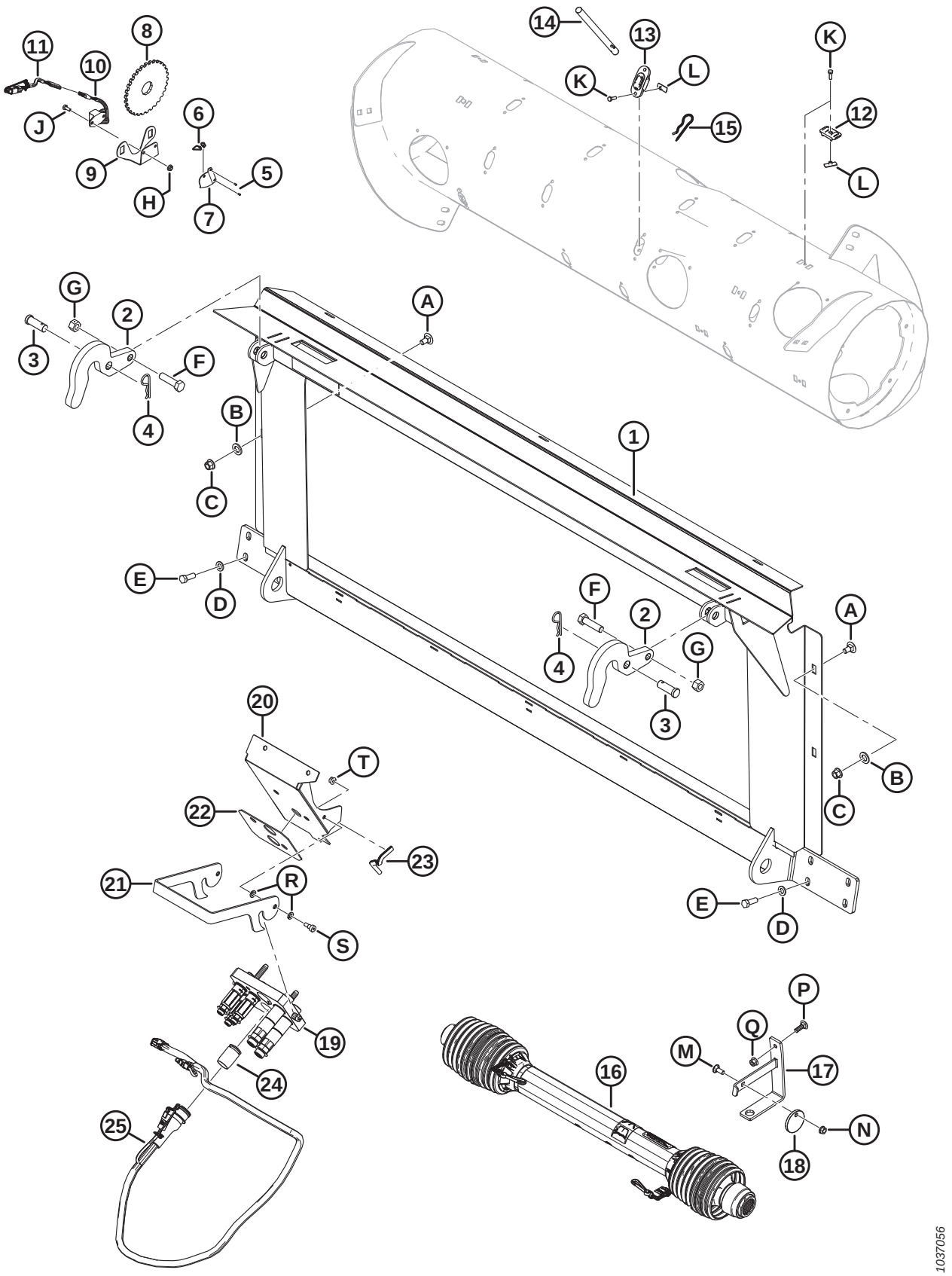
1037056

Ref	Part Number	Description	Qty	Serial Number
E	152730	BOLT – HEX HD TFL M12 X 1.75 X 35-10.9-AA1J		
F	136141	BOLT – HEX HD M16 X 2 X 60-8.8-AA1J		
G	136476	NUT – HEX CTR LOC M16 X 2-8		
H	21455	NUT – FLG (SER FACE) 1/4 NC-GR5-AA1J		
J	21572	BOLT – HEX HD 1/4-20 X 0.625 GR5-AA1J		
K	252703	BOLT – HEX HD TFL M6 X 1 X 20 X SPCL-12.9-AA2L		
L	197263	NUT – TEE M6 X 1		
M	19965	BOLT – RHSN 3/8-16 X 1-GR5-AA1J		
N	30228	NUT – FLG DT SM FACE 3/8-16 UNC-GR5-AA1J		
P	184662	BOLT – RHSN TFL M10 X 1.5 X 30-8.8-AA1J		
Q	135799	NUT – HEX FLG CTR LOC M10 X 1.5-10		
R	30632	WASHER – LOCK SPRING M10		
S	135894	SCREW – HEX SOC HD SHLDR M10		
T	135337	NUT – HEX FLG CTR LK M8 X 1.25-8-AA1J		

159 Auger Dent Repair Kit

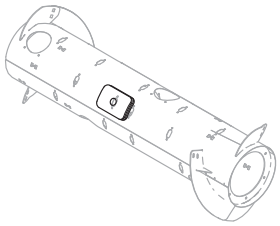

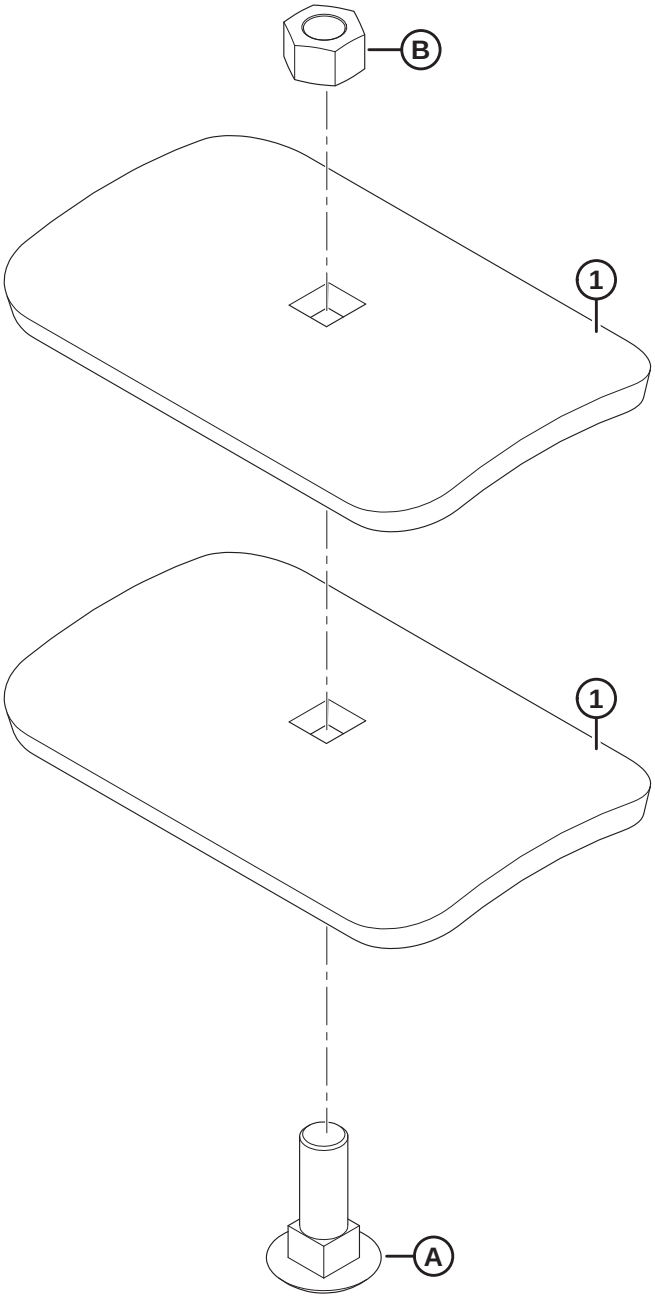

1023786

AUGER DENT REPAIR KIT

Ref	Part Number	Description	Qty	Serial Number
	237563	KIT – AUGER DENT REPAIR [502]		
1	237556	SUPPORT	2	
A	197154	BOLT – RHSN M16 X 2 X 50-10.9-A3L		
B	184699	NUT – HEX M16 X 2-8-A3L		

502. Includes two supports (MD #237556), bolt (MD #197154), nut (MD #184699), and instructions.

160 Auger Patch Kit

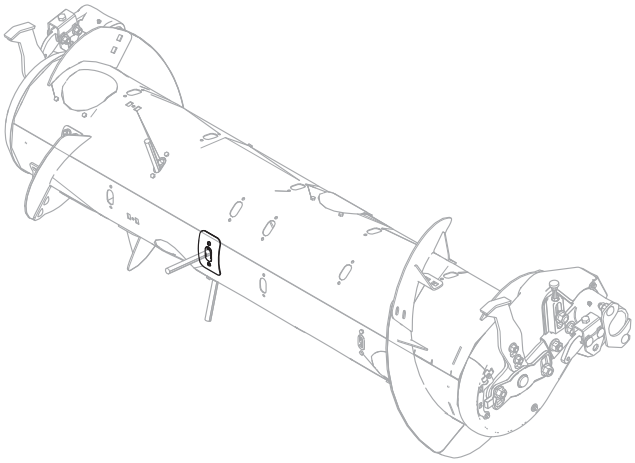

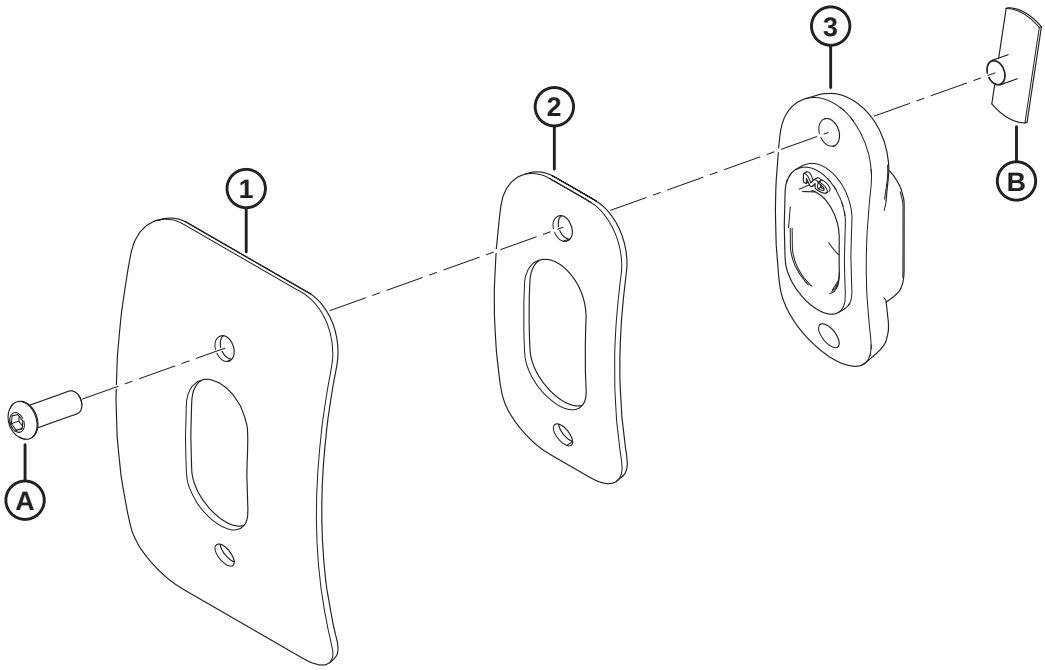

1033677

AUGER PATCH KIT

Ref	Part Number	Description	Qty	Serial Number
	335464	KIT – RTD REPAIR [503]		
1	NSS	BAND	1	
2	NSS	BAND – RTD REPAIR	1	
3	337143	GUIDE	1	
A	123084	SCREW – HEX SOCKET BUTTON HEAD		
B	123202	NUT – TEE		

503. Kit is used to repair auger damage around an auger finger. Kit includes repair bands (not sold separately), one guide (MD #337143), two screws (MD #123084), two tee nuts (MD #123202), and instructions.

161 John Deere Conversion Kits

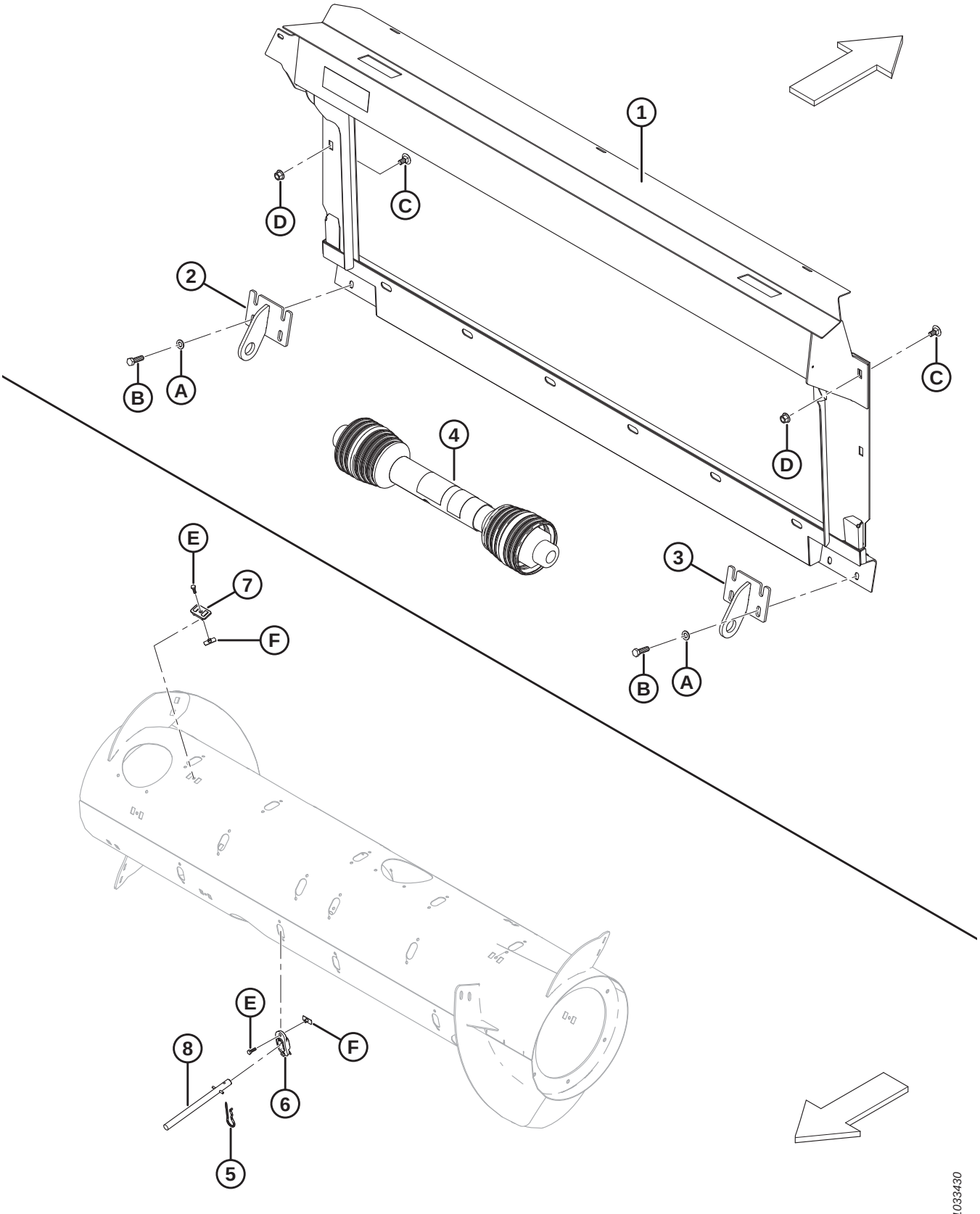

Ref	Part Number	Description	Qty	Serial Number
	B6887	KIT – JD LEVEL LAND CONVERSION [504]		
1	294514	FRAME – JD WELDT LEVEL LAND	1	
2	151941	BRACKET – LEFT WELDT	1	
3	151942	BRACKET – RIGHT WELDT	1	
4	187550	21T DRIVELINE – JD WIDEBODY WALKER MACHINES-9650/9660, 9660 WTS, AND T9670 [505]	1	
5	123180	PIN – HAIR	8	
6	337143	GUIDE	8	
7	213084	PLUG – FLIGHTING SLOT	8	
8	337152	KIT – FINGER [506]	8	
	7642	PIN – SPRING 3/16 DIA X 1.5 LG		
	B6957	KIT – JD CONTOUR MASTER CONVERSION [504]		
1	**347301**	**ASSEMBLY – JD CM TRANS FRAME W/DECAL**	**1**	
2	245760	BRACKET – LEFT WELDT	1	
3	245761	BRACKET – RIGHT WELDT	1	
4	187553	21T DRIVELINE – JD STS/S SERIES (EXCEPT MODELS LISTED AT MD #187550), CLAAS, AND AGCO [505]	1	
A	184714	WASHER – FLAT REG M12-300HV-A3L		
B	184669	BOLT – HEX HD M12 X 1.75 X 40-8.8-A3L		
C	136625	BOLT – HEX SER FLG HD M12 X 1.75 X 25 X SPCL-100-AA1J		
D	136431	NUT – HEX FLG CTR LOC M12 X 1.75-10-A3L		
E	252703	BOLT – HEX HD TFL M6 X 1 X 20 X SPCL-12.9-AA2L [507]		
F	197263	NUT – TEE M6 X 1 [507]		

504. Kits available through Whole Goods only.
505. For service parts, refer to Section *111 Input Driveline and Support, page 339*.
506. Includes solid finger (not sold separately), spring pin (MD #7642), guide (MD #337143), and instructions.
507. Used in conversion kit MD #B6887 only.

162 Rostselmash Conversion Kit

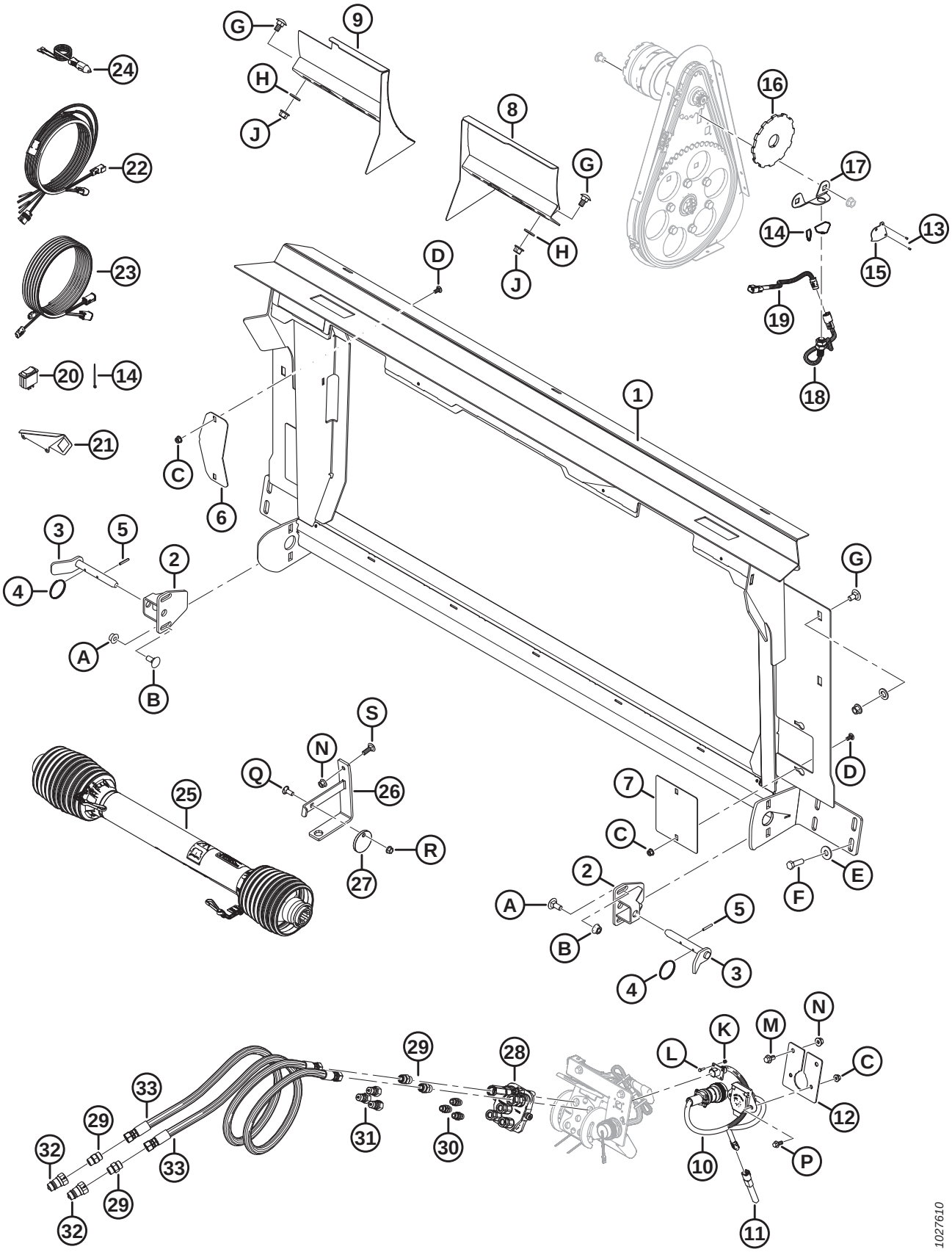

ROSTSELMASH CONVERSION KIT

Ref	Part Number	Description	Qty	Serial Number
	B6568	KIT – CASE TO ROSTSELMASH 760/780 CONV PKG [508]		
1	314684	FRAME – TRANSITION W/ DECAL	1	
2	301185	SUPPORT – LOCK WELDT	2	
3	301202	HANDLE – LOWER LOCK WELDT	2	
4	118137	RING	2	
5	13617	PIN – SPRING 3/16 DIA X 1.25 LG	2	
6	322113	PLATE – DRIVE COVER	1	
7	314627	PLATE – FILLER COVER	2	
8	301200	DEFLECTOR – RH WELDT	1	
9	301193	DEFLECTOR – LH WELDT	1	
10	300978	HARNESS – ADAPTER, CNH TO RSM	1	
11	300536	VOLTAGE REGULATOR – (+) 5 VDC	1	
12	314307	SUPPORT – CONNECTOR	1	
13	14338	RIVET – BLIND 1/8 X .125	2	
14	16661	FASTENER – CABLE TIE, BLACK	14	
15	164131	SHIELD – REEL SPEED SENSOR HARNESS	1	
16	304533	DISC – REEL SPEED SENSOR	1	
17	133781	SUPPORT – REEL SPEED SENSOR	1	
18	136167	SENSOR – SPEED	1	
19	304982	HARNESS – WIRING REEL SPEED SENSOR (CLAAS/LEXION)	1	
20	109064	SWITCH – ROCKER (HDR LIFT RELAY BYPASS)	1	
21	158377	SUPPORT – ROCKER SWITCH	1	
22	304210	HARNESS – CAB DRAPER CONTROL	1	
23	304211	HARNESS – CAB DRAPER EXTENSION	1	
24	220570	HARNESS – AUX PWR TO QUICK DISC	1	
25	301704	DRIVELINE – 38-8 SPLINE [509]	1	
26	133166	BRACKET – DRIVELINE HANGER-WELDT	1	
27	133165	DISC – LOCK, DRIVELINE	1	

508. Kit is used to convert from a Case configuration to a Rostselmash 760/780 configuration. Kit also requires a Dealer/ Customer sourced Rostselmash reel speed sensor. Includes all listed parts and instructions. Kits available through Whole Goods only.
509. For service parts, refer to Section *111 Input Driveline and Support, page 339*.

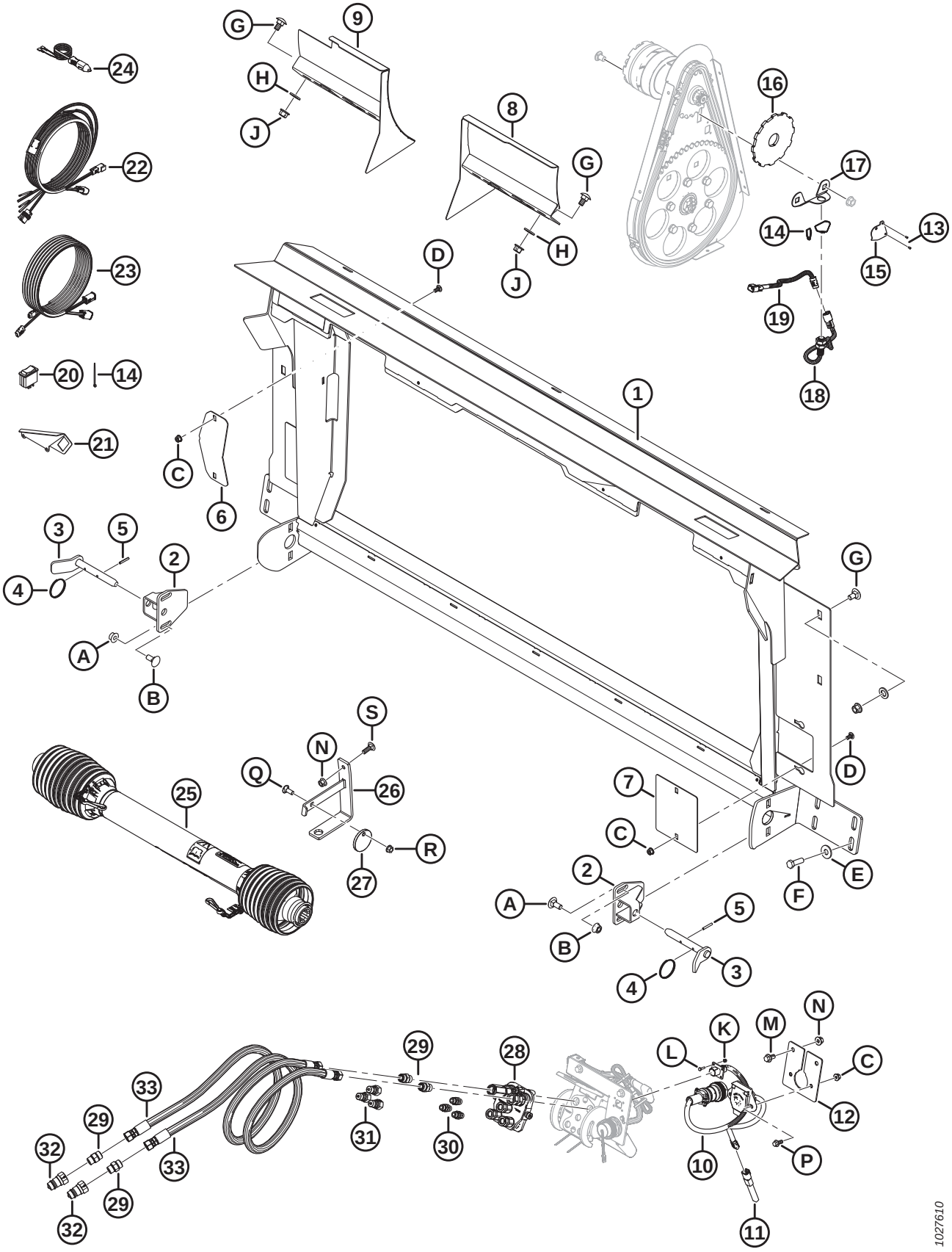
1027610

Ref	Part Number	Description	Qty	Serial Number
28	135238	COUPLING – MULTI LINK	1	
	111981	SEAL KIT – 1/4 IN. COUPLER		
	111982	SEAL KIT – 3/8 IN. COUPLER		
	111983	KIT – SCREW		
	111984	KIT – DOWEL		
	111985	COUPLER – 3/8 IN. (LONG)		
	111986	COUPLER – 1/4 IN.		
	294350	COUPLER – SHORT, 3/8 IN. (SHORT)		
29	135780	FITTING – ADAPTER	4	
	44209	O-RING – #8 ORB		
	135866	O-RING – #8 ORFS		
30	301763	FITTING – ADAPTER -6 ORB	3	
	50219	O-RING – #6 ORB		
31	301764	FITTING – COUPLING HYD	3	
32	301765	FITTING – COUPLING HYD	2	
33	301766	HOSE – HYDRUALIC	2	
A	184667	BOLT – RHSN M12 X 1.75 X 30-8.8-AA1J		
B	184697	NUT – HEX SER FLG M12 X 1.75-8-AA1J		
C	135337	NUT – HEX FLG CTR LK M8 X 1.25-8-AA1J		
D	191489	BOLT – RHSSN TFL M8 X 1.25 X 16-8.8-AA1J		
E	184589	WASHER – FLAT 9/16 X 1.375 AA1J		
F	184669	BOLT – HEX HD M12 X 1.75 X 40-8.8-AA1J		
G	135903	BOLT – RHSN M12 X 1.75 X 25-8.8-AA1J		
H	184717	WASHER – FLAT REG M16-200HV-AA1J		
J	136431	NUT – HEX FLG CTR LOC M12 X 1.75-10		
K	197320	NUT – HEX NYLOC M4 X 0.7-8-AA1J		
L	197319	BOLT – HEX HD TFL M4 X 0.7 X 16-8.8-AA1J		
M	152655	BOLT – HEX FLG HD M10 X 1.5 X 20-8.8-AA1J		
N	135799	NUT – HEX FLG CTR LOC M10 X 1.5-10		
P	136300	BOLT – HEX FLG HD TFL M8 X 1.25 X 20-8.8-AA3L		
Q	19965	BOLT – RHSN 3/8-16 X 1-GR5-AA1J		
R	30228	NUT – FLG DT 3/8 NC-GR5-AA1J		
S	184662	BOLT – RHSN TFL M10 X 1.5 X 30-8.8-AA1J		

163 Reel Speed Sensors

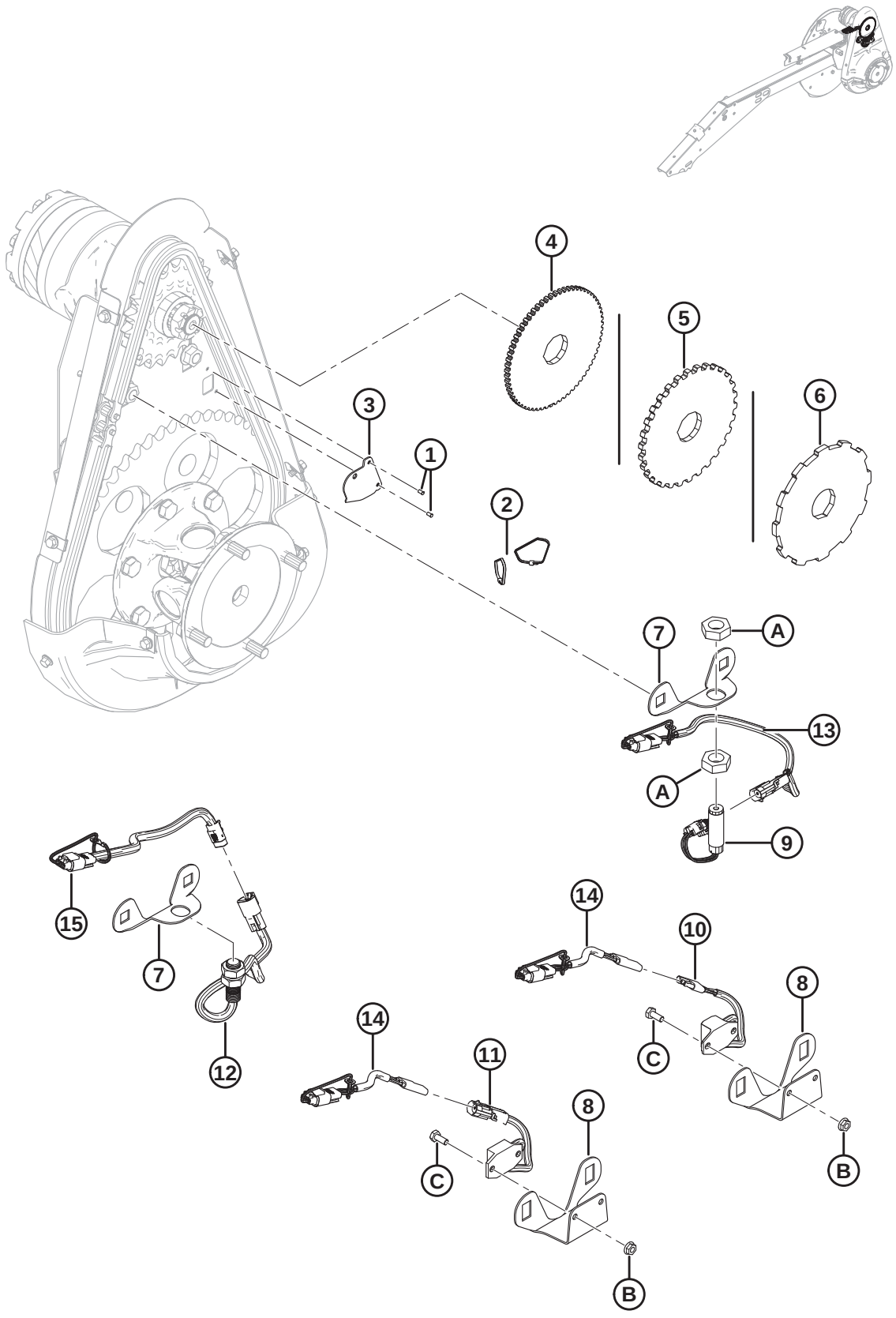

REEL SPEED SENSORS

Ref	Part Number	Description	Qty	Serial Number
1	14338	RIVET – BLIND 1/8 X .125	2	
2	16661	FASTENER – CABLE TIE (BLACK)	2	
3	164131	SHIELD – REEL SPEED SENSOR HARNESS	1	
4	133716	DISC – REEL SPEED SENSOR (JD)	1	
5	133997	DISC – REEL SPEED SENSOR (AGCO/GLEANER)	1	
6	304533	DISC – REEL SPEED SENSOR (CLAAS)	1	
7	133781	SUPPORT – REEL SPEED SENSOR (JD/CLAAS)	1	
8	279746	SUPPORT – REEL SPEED SENSOR (AGCO/GLEANER)	1	
9	184437	SENSOR – SPEED (JD)	1	
10	152736	SENSOR – SPEED, 3-WIRE (CHALLENGER/MASSEY)	1	
11	184440	SENSOR – SPEED, 2-WIRE (GLEANER)	1	
12	136167	SENSOR – SPEED (CLAAS)	1	
13	220571	HARNESS – WIRING REEL SPEED SENSOR (JD)	1	
14	220572	HARNESS – WIRING REEL SPEED SENSOR (CHALLENGER/MASSEY/GLEANER)	1	
15	304982	HARNESS – WIRING REEL SPEED SENSOR (CLAAS/LEXION)	1	
A	7674	NUT – HEX JAM 3/4-16 UNF GR 5 ZP		
B	21455	NUT – FLG (SER FACE) 1/4 NC GR 5 ZP		
C	21572	BOLT – HEX HD 1/4 NC X 0.625 LG GR 5 ZP		

164 (Option) Auger Flighting Kits

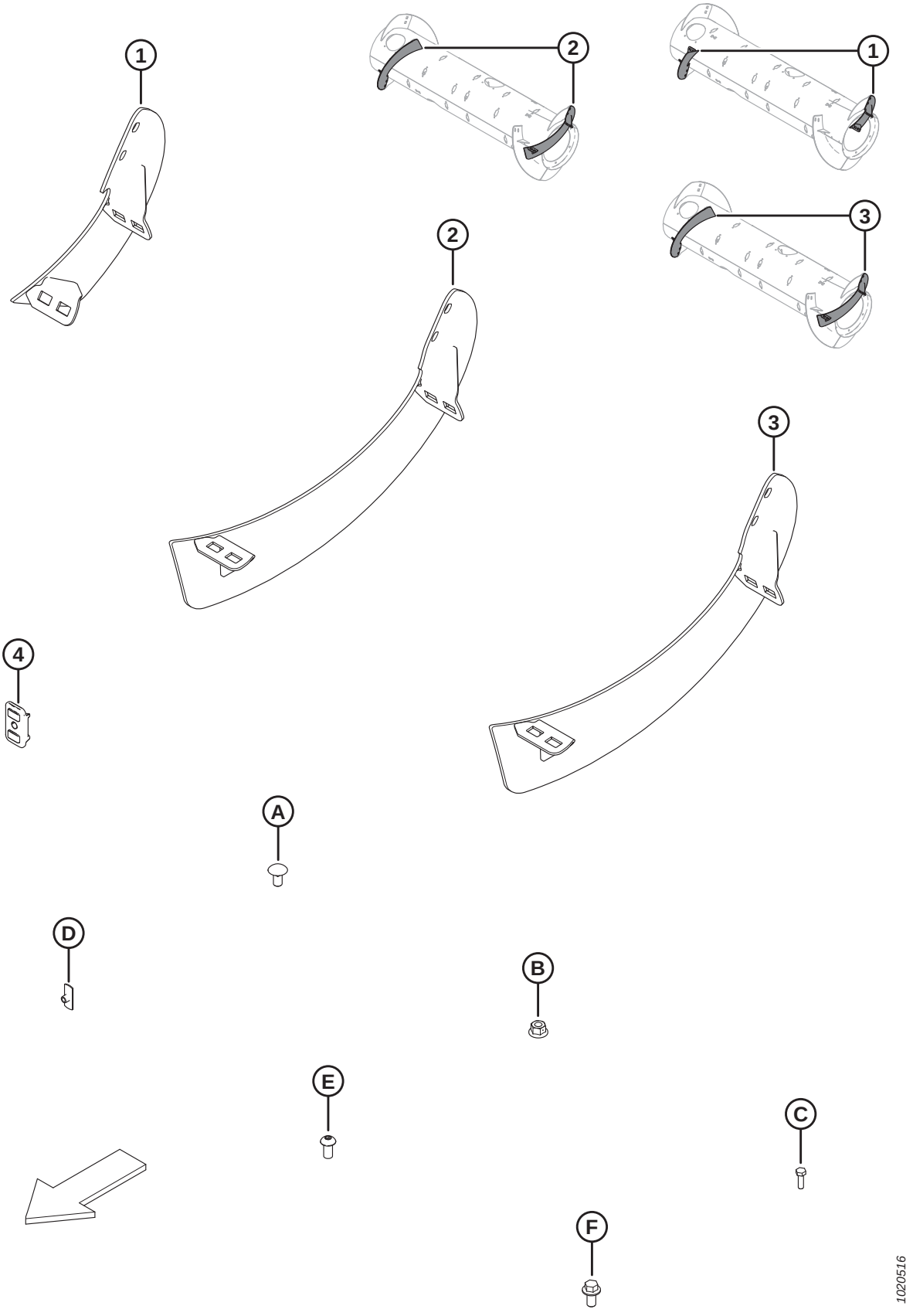

(OPTION) AUGER FLIGHTING KITS

NOTE:

Long flighting kits (MD #B6400 and 287032) are used to convert the auger to the optional Ultra Narrow configuration. Refer to your header operator's manual for more information.

Ref	Part Number	Description	Qty	Serial Number
	B6400	KIT – FM100 RTD, WEAR RESISTANT FLIGHT [510]		
	287031	KIT – FM100 RTD, MED FLIGHT [511]		
	287032	KIT – FM100 RTD, LONG FLIGHT [512]		
1	NSS	FLIGHTING, RTD – RH, MED [513]	1	
	NSS	FLIGHTING, RTD – LH, MED [514]	1	
	287887	FLIGHTING, RTD – RH, MED (HIWEAR)	1	
	287888	FLIGHTING, RTD – LH, MED (HIWEAR)	1	
2	NSS	FLIGHTING, RTD – RH, LONG [515]	1	
	NSS	FLIGHTING, RTD – LH, LONG [516]	1	
3	287890	FLIGHTING, RTD – RH, LONG (HIWEAR)	1	
	287889	FLIGHTING, RTD – LH, LONG (HIWEAR)	1	
4	213084	PLUG – FLIGHTING SLOT	2	
A	136178	BOLT – RHSN M10 X 1.5 X 20-8.8-A3L		
B	135799	NUT – HEX FLG CTR LOC M10 X 1.5-10-A3L		
C	252703	BOLT – HEX HD TFL M6 X 1 X 20 X SPCL-12.9-AA2L		
D	197263	NUT – TEE M6 X 1		
E	135723	SCREW – HEX SOC BTN HD M10 X 1.5 X 20-10.9-A3L		
F	152655	BOLT – HEX FLG HD M10 X 1.5 X 20-8.8-A3L		

510. Kit includes Long Flighting kit (MD #287032). Kits available through Whole Goods only.
511. Kit includes wear-resistant medium flighting, two plugs (MD #213084), hardware, and instructions.
512. Kit includes wear-resistant long flighting, two plugs (MD #213084), hardware, and instructions.
513. Service with medium right flighting (MD #287887).
514. Service with medium left flighting (MD #287888).
515. Service with long right flighting (MD #287890).
516. Service with long left flighting (MD #287889).

165 (Option) Dual Sensor Auto Header Height Control

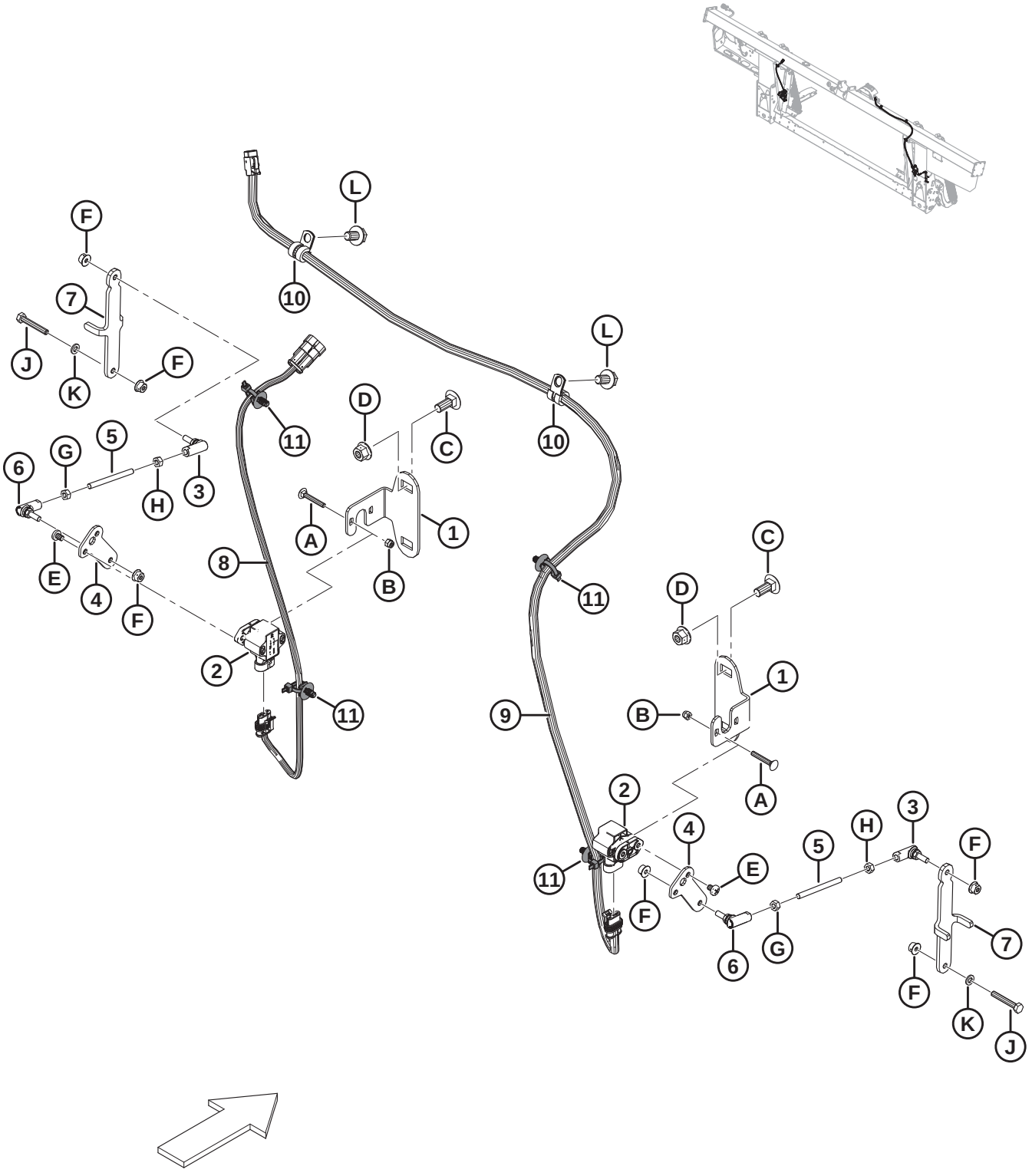

(OPTION) DUAL SENSOR AUTO HEADER HEIGHT CONTROL

Ref	Part Number	Description	Qty	Serial Number
	B6211	KIT – DUAL SENSOR AHHC [517]		
	248783	KIT – DUAL SENSOR AHHC [518]		
1	301865	BRACKET – AHHC SENSOR	2	
2	248643	ROTARY SENSOR – DUAL OUTPUT	2	
3	291485	BALL JOINT – LH THREAD	2	
4	248816	ARM – FLOAT SENSOR	2	
5	232650	ROD – THREADED	2	
6	291484	BALL JOINT – RH THREAD	2	
7	295179	BRACKET – SENSOR LINK	2	
8	276201	HARNESS – LH HEIGHT SENSOR	1	
9	276871	HARNESS – RH HEIGHT SENSOR	1	
10	136410	CLAMP – INSULATED 3/8 IN.	2	
11	136655	FASTENER – FIR TREE MT W/ TIE	4	
A	197229	BOLT – RHSN M5 X 0.8 X 35-4.6-A2L		
B	197230	NUT – HEX NYLOC M5 X 0.8-8-A2L		
C	135785	BOLT – RHSN M10 X 1.5 X 25-8.8-A3L		
D	135799	NUT – HEX FLG CTR LOC M10 X 1.5-10-A3L		
E	158704	SCREW – PAN HD M6 X 1 X 8-4.8-A2L		
F	152668	NUT – HEX FLG CTR LOC M6 X 1-8-A2L		
G	184683	NUT – HEX ISO 4032 M6 X 1-8-A2L		
H	136613	NUT – HEX LH ISO 4032 M6 X 1-8-AA2L		
J	135671	BOLT – HEX HD TFL M6 X 1 X 40-8.8-A2L		
K	184705	WASHER – FLAT M6-200HV-A2L		
L	136151	BOLT – HEX FLG HD TFL M10 X 1.5 X 16-8.8-A3L		

517. Includes Dual Sensor Auto Header Height Control kit (MD #248783). Kits available through Whole Goods only.
518. Includes all listed parts, hardware, and instructions.

166 (Option) FM100 Full Interface Filler – D1

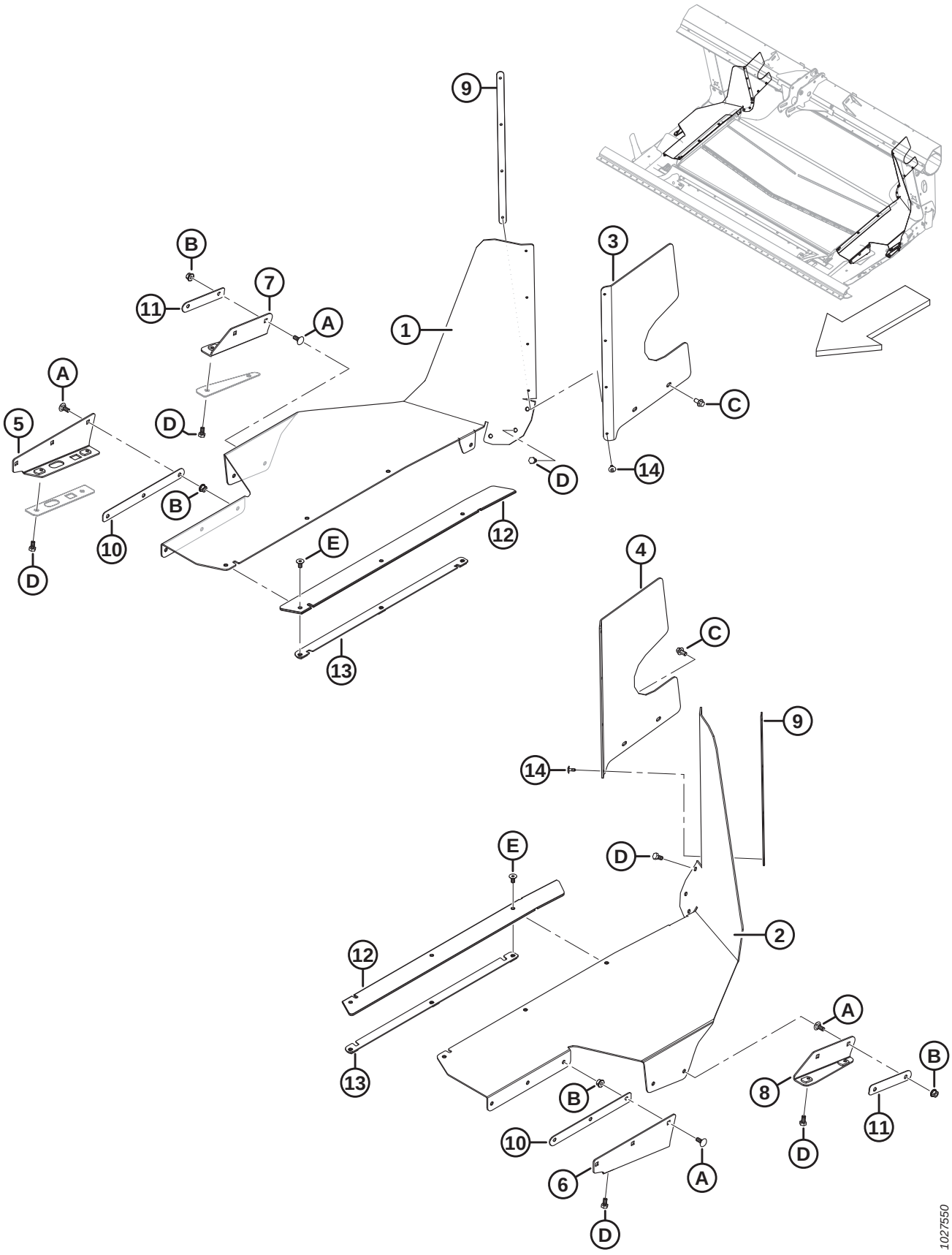

(OPTION) FM100 FULL INTERFACE FILLER – D1

Ref	Part Number	Description	Qty	Serial Number
	B6446	KIT – FM100 FULL INTERFACE FILLER D1 [519]		
1	295348	FILLER – SIDE DECK RH D1	1	
2	295349	FILLER – SIDE DECK LH D1	1	
3	213493	FILLER – RH REAR UPPER	1	
4	213492	FILLER – LH REAR UPPER	1	
5	295476	SUPPORT – FILLER RH WELDT D1	1	
6	295478	SUPPORT – FILLER LH WELDT D1	1	
7	295513	SUPPORT – FILLER RH WELDT D1	1	
8	295514	SUPPORT – FILLER LH WELDT D1	1	
9	276770	PLATE – FILLER RETAINER	2	
10	213295	PLATE – FILLER RETAINER	2	
11	295611	PLATE – FILLER RETAINER	2	
12	287719	FILLER – REINFORCEMENT	2	
13	301726	RETAINER – SIDE FILLER WELDT	2	
14	293053	RIVET – POP	8	
A	197171	BOLT – RHSN M8 X 1.25 X 20-8.8-A2L		
B	135337	NUT – HEX FLG CTR LOC M8 X 1.25-8-A2L		
C	136485	BOLT – HEX FLG HD TFL M8 X 1.25 X 16-8.8-A3L		
D	50139	BOLT – HEX HD TFL M8 X 1.25 X 16-8.8-A2L		
E	252542	SCREW – HEX SOC CSK HD TFL M8 X 1.25 X 16-10.9-AA2L		

519. European market area only. Provides additional sealing between float module and header. Kits available through Whole Goods only.

167 (Option) Hillside Extension

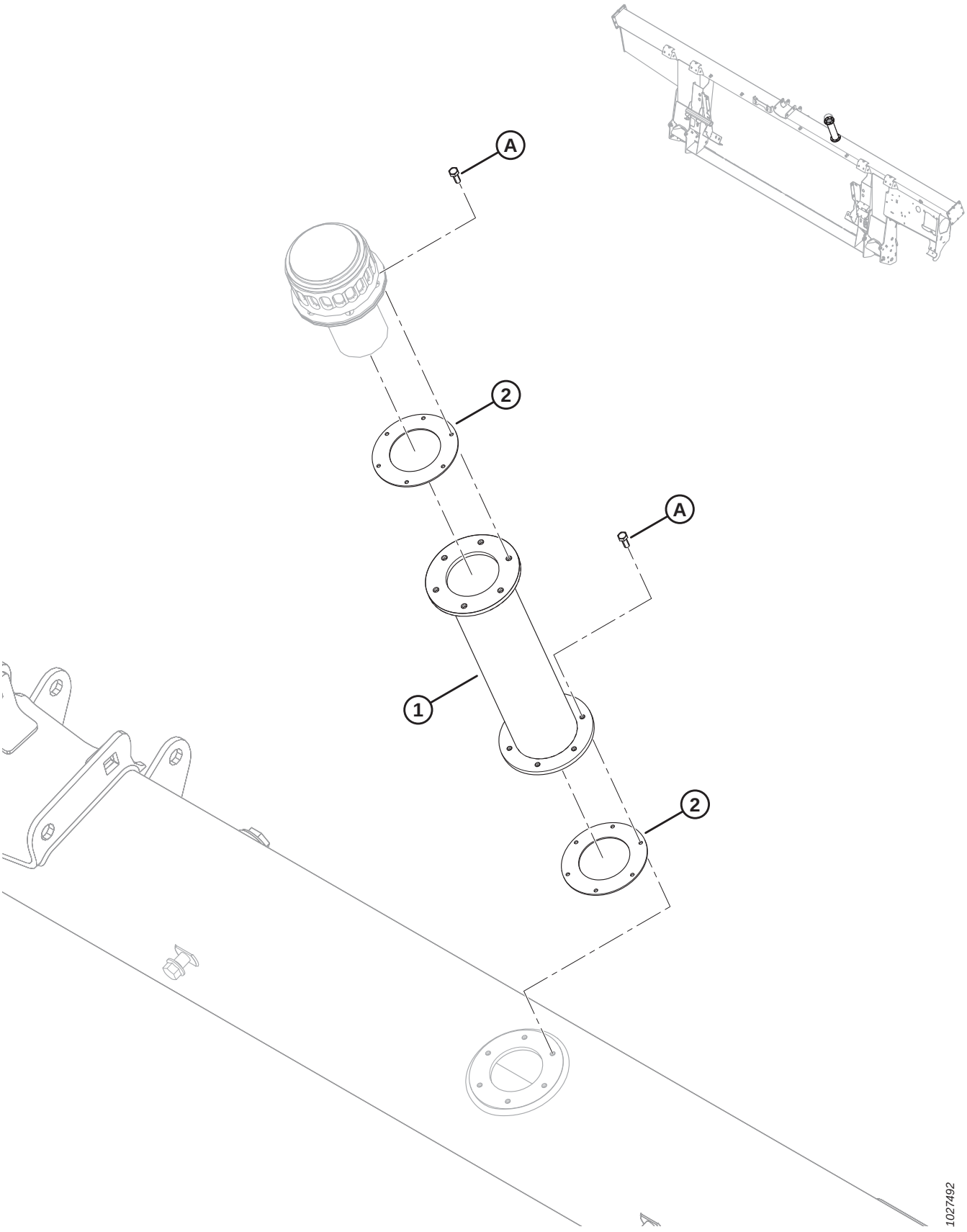

(OPTION) HILLSIDE EXTENSION

Ref	Part Number	Description	Qty	Serial Number
	B6057	KIT – HYDRAULIC RESERVOIR FILL EXTENSION [520]		
	312824	**KIT – HYDRAULIC RESERVOIR FILL EXTENSION** [521]		
1	NSS	HYD RESERVOIR FILL EXTENSION	1	
2	NSS	GASKET	2	
	166450	DECAL – WARNING, HOT SURFACE	2	
A	**320397**	**SCREW – HEX HD TFL M5 X 0.8 X 12-8.8-PLAIN (2022 AND LATER)** [522]		**421190–**
	135873	SCREW – MACH #10-32 X 0.5 IN. HEX **(2021 AND PRIOR)** [522]		**–421189**

520. Kit includes hydraulic reservoir fill extension (not sold separately), two gaskets (not sold separately), two decals (MD #166450), and twelve screws (MD #320397). Kits available through Whole Goods only.
521. Kit includes hydraulic reservoir fill extension (not sold separately), two gaskets (not sold separately), two decals (MD #166450), twelve screws (MD #320397), and instructions.
522. On model year 2021 and prior units, use imperial screw (MD #135873) to prevent cross threading a metric bolt into an imperial threaded hole.

168 (Option) In-Cab Side Draper Speed Control Kits

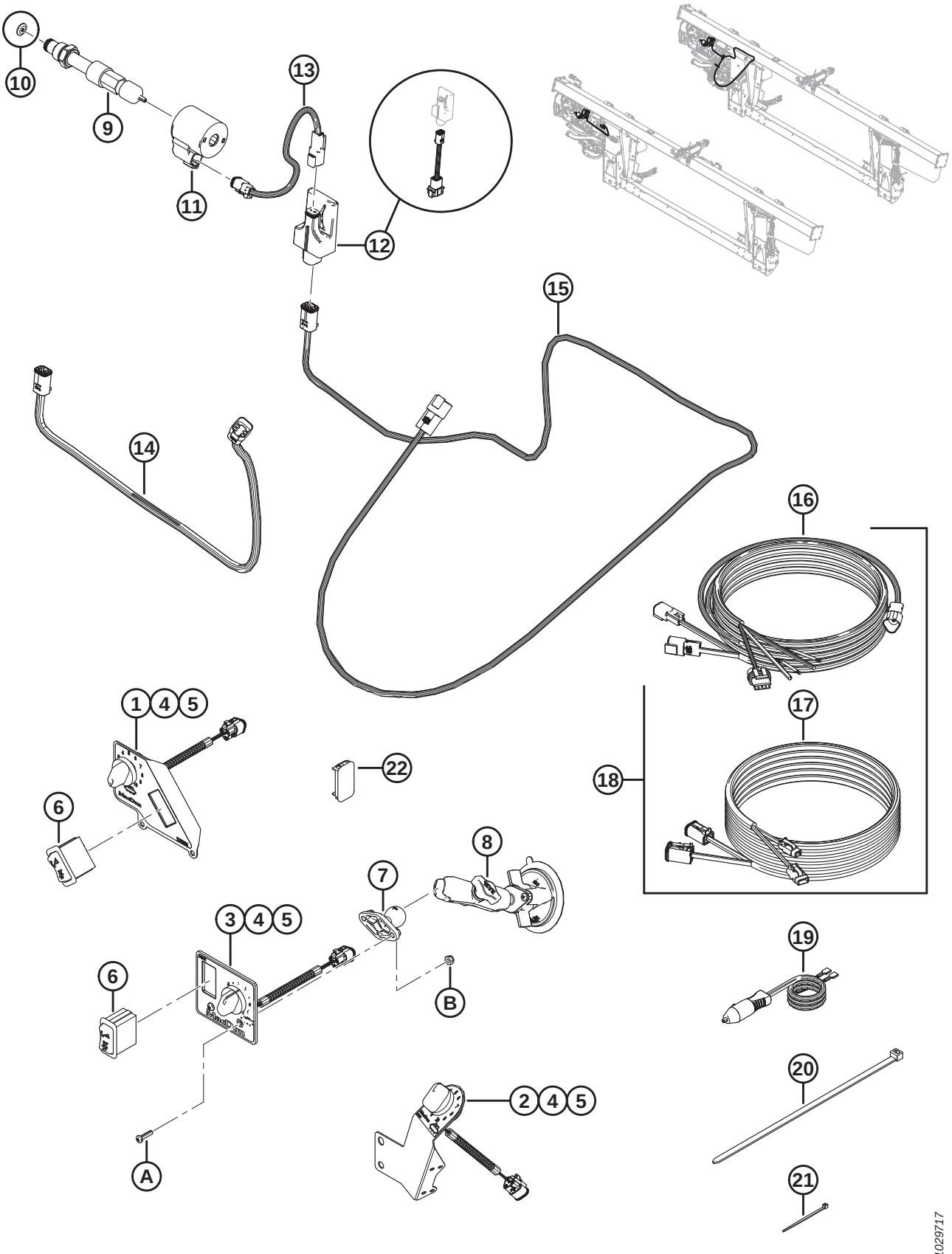

(OPTION) IN-CAB SIDE DRAPER SPEED CONTROL KITS

Ref	Part Number	Description	Qty B6701/B6702/B6703	Serial Number
	B6701	KIT – IN-CAB SIDE DRAPER SPEED CONTROL (JOHN DEERE) [523]	1/0/0	
	B6702	KIT – IN-CAB SIDE DRAPER SPEED CONTROL (CNH) [523]	0/1/0	
	B6703	KIT – IN-CAB SIDE DRAPER SPEED CONTROL (GENERIC) [523]	0/0/1	
1	287945	CONTROL PANEL – ICSDSC, JD [524]	1/0/0	
2	276671	CONTROL PANEL – ICSDSC, CNH [524]	0/1/0	
3	287944	CONTROL PANEL – ICSDSC, GENERIC [524]	0/0/1	
4	213459	POTENTIOMETER – 5K	1/1/1	
5	109773	KNOB – PLASTIC	1/1/1	
6	287797	SWITCH – ROCKER, TILT	1/0/1	
7	287749	BASE – BALL MOUNT	0/0/1	
8	287859	BASE – SUCTION CUP WITH ARM	0/0/1	
9	276631	VALVE – FLOW CONTROL [525]	1/1/1	
	220908	KIT – SEAL		
10	287227	ORIFICE PLATE – 0.18 IN. (2017 ONLY) [526]	1/1/1	–321189
11	209045	COIL – SOLENOID	1/1/1	
12	304377	KIT – VALVE DRIVER MODULE [527]	1/1/1	
	304376	HARNESS – VALVE DRIVER ADAPTER [528]	1/1/1	
13	213812	HARNESS – SOLENOID	1/1/1	
14	304254	HARNESS – VALVE DRIVER (CNH)	0/1/0	371190–
	213813	HARNESS – VALVE DRIVER (CNH) (2019 AND PRIOR) [529]	0/1/0	–371189
15	304370	HARNESS – VALVE DRIVER	1/0/1	371190–
	287894	HARNESS – VALVE DRIVER (2019 AND PRIOR) [529]	1/0/1	–371189
16	304210	HARNESS – CAB DRAPER CONTROL	0/1/1	346190–
17	304211	HARNESS – CAB DRAPER EXTENSION	0/1/1	346190–
18	304216	KIT – CAB DRAPER CONTROL HARNESS [530]	0/1/1	–346189
19	220570	HARNESS – AUX PWR TO QUICK DISC	1/1/1	
20	30753	FASTENER – CABLE TIE, BLACK, 305 MM LG	2/2/2	
21	16661	FASTENER – CABLE TIE, BLACK, 69 MM LG	15/15/15	

523. Kits available through Whole Goods only. Includes all listed parts and instructions. See parts list for quantities specific to kit.
524. Includes 5K potentiometer (MD #213459) and plastic knob (MD #109773).
525. Valve integrates orifice plate (MD #287227) into the valve cartridge assembly for model year 2018 . Model year 2017 had it as a separate part.
526. Serviceable part for model year 2017.
527. Includes valve driver module with loaded software (NSS) and adapter harness (MD #304376).
528. Valve driver adapter harness (MD #304376) used to connect valve driver module to model year 2019 and prior valve driver harnesses (MD #213813 and 287894).
529. Service part only for model year 2019 and prior units.
530. Kit is used to service model year 2018 and prior units with 2018 cab draper control harness (MD #213667). Includes cab draper control harness (MD #304210) and cab draper extension harness (MD #304211).

(OPTION) IN-CAB SIDE DRAPER SPEED CONTROL KITS

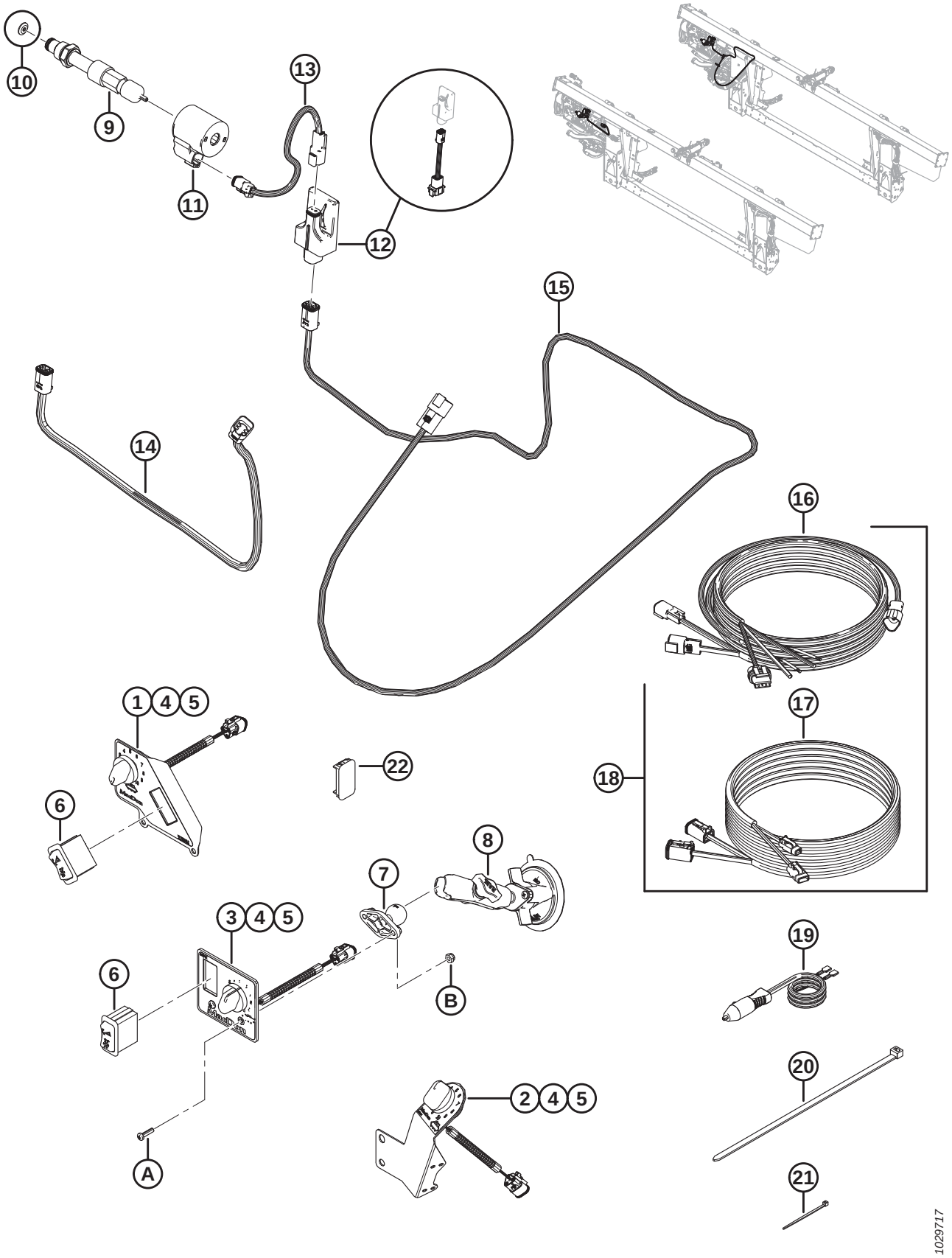

Ref	Part Number	Description	Qty B6701/B6702/B6703	Serial Number
22	287784	PLUG – PANEL [531]	0/0/1	
A	135161	SCREW – MACHINE, #10-32 UNF X 0.75 IN. [532]		
B	20012	NUT – NYLOC #10-32-GR5-AA3L [532]		

531. Supplied with Generic In-Cab Side Draper Speed Control kit (MD #B6703) to be installed in place of combine's non-functioning switch, after kit has been installed.
532. Service part only for Generic In-Cab Side Draper Speed Control kits (MD #B6703).

169 (Option) Stripper Bars

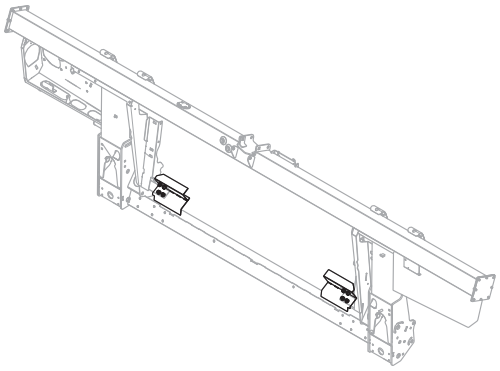

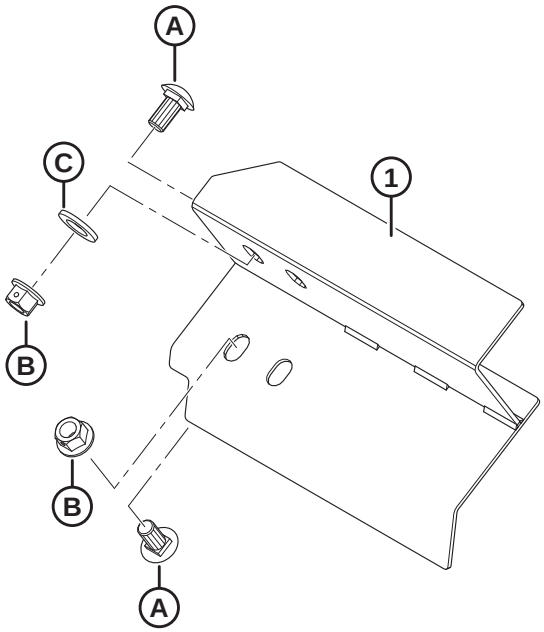

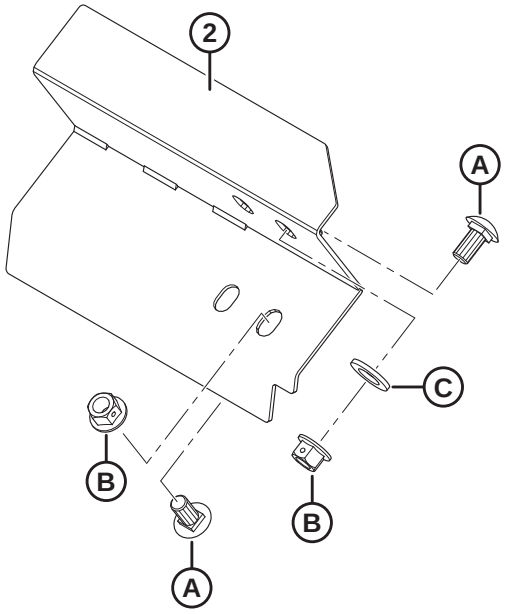

1023852

(OPTION) STRIPPER BARS

Ref	Part Number	Description	Qty	Serial Number
	B6042	KIT – STRIPPER BARS, 265 MM LG (WITHOUT CUTOUT) [533]		
	B6043	KIT – STRIPPER BARS, 265 MM LG (WITH CUTOUT) [533]		
	B6044	KIT – STRIPPER BARS, 325 MM LG [533]		
	B6045	KIT – STRIPPER BARS, 365 MM LG [533]		
	B6046	KIT – STRIPPER BARS, 403 MM LG [533]		
	B6213	KIT – STRIPPER BARS, 515 MM LG [533]		
1	213523	STRIPPER – WELDMENT, LEFT (265 MM LG W/O CUTOUT)	1	
	276899	STRIPPER – WELDMENT, LEFT (265 MM LG W/ CUTOUT) [534]	1	
	213573	STRIPPER – WELDMENT, LEFT (325 MM LG)	1	
	213567	STRIPPER – WELDMENT, LEFT (365 MM LG)	1	
	213561	STRIPPER – WELDMENT, LEFT (403 MM LG)	1	
	213579	STRIPPER – WELDMENT, LEFT (515 MM LG)	1	
2	213525	STRIPPER – WELDMENT, RIGHT (265 MM LG W/O CUTOUT)	1	
	276900	STRIPPER – WELDMENT, RIGHT (265 MM LG W/ CUTOUT) [534]	1	
	213574	STRIPPER – WELDMENT, RIGHT (325 MM LG)	1	
	213568	STRIPPER – WELDMENT, RIGHT (365 MM LG)	1	
	213562	STRIPPER – WELDMENT, RIGHT (403 MM LG)	1	
	213580	STRIPPER – WELDMENT, RIGHT (515 MM LG)	1	
A	135903	BOLT – RHSN M12 X 1.75 X 25-8.8-A3L		
B	136431	NUT – HEX FLG CTR LOC M12 X 1.75-10-A3L		
C	184717	WASHER – FLAT REG M16-200HV-AA1J		

533. Kits available through Whole Goods only.
534. For John Deere S6X0 Series combines.

170 (Option) Tilt Harness Kit

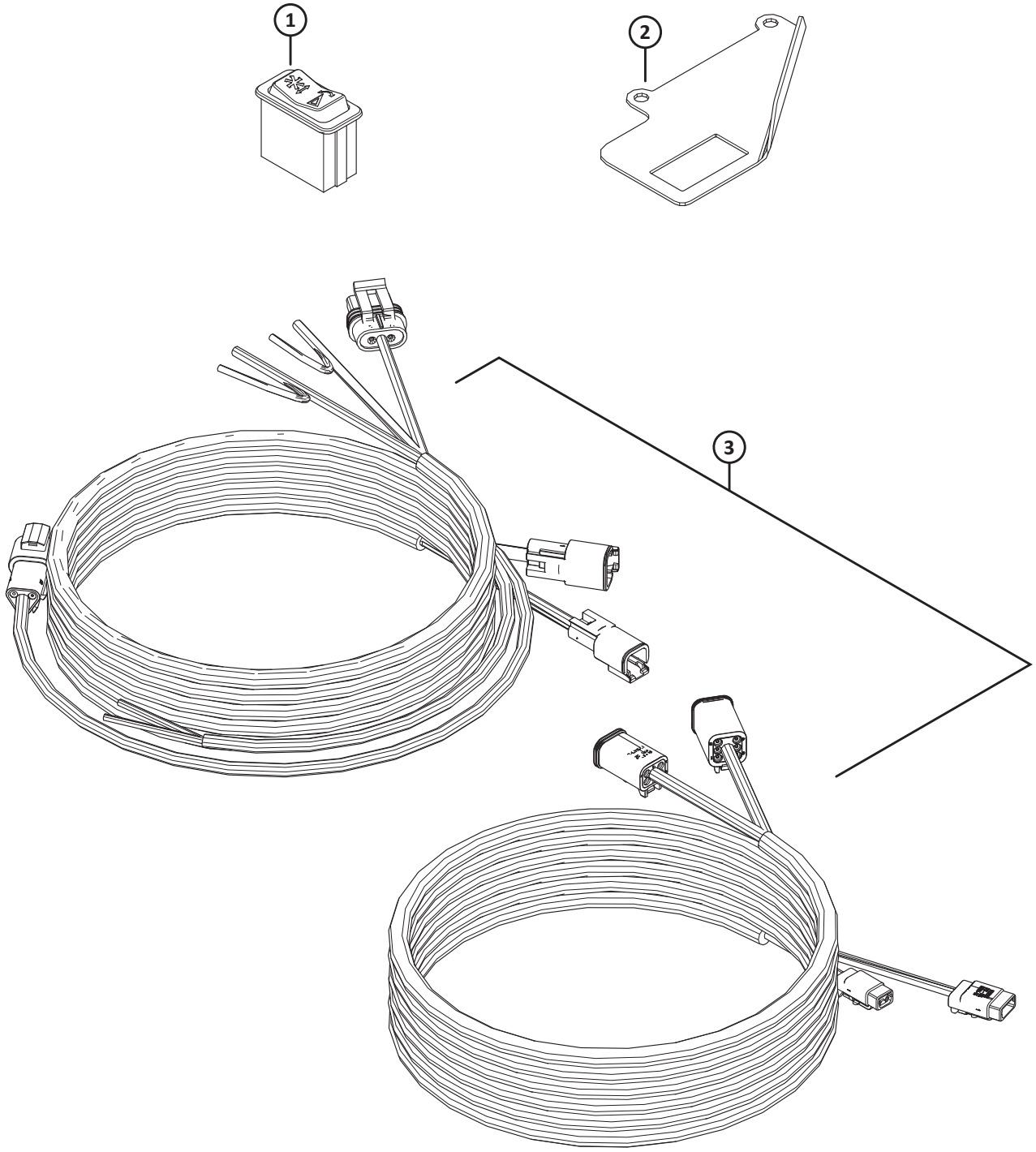

(OPTION) TILT HARNESS KIT

Ref	Part Number	Description	Qty	Serial Number
	335695	KIT – 1 SERIES TILT HARNESS [535]		
1	287797	SWITCH – ROCKER, TILT	1	
2	220734	SUPPORT – ROCKER SWITCH	1	
3	304216	KIT – CAB DRAPER CONTROL HARNESS [536]	1	
	304210	HARNESS – CAB DRAPER CONTROL		
	304211	HARNESS – CAB DRAPER EXTENSION		

535. Kit includes all listed parts.
536. Kit includes cab draper control harness (MD #304210) and cab draper extension harness (MD #304211).

Index

795 310
1709 362
2148 192
4761 ..... 56, 192
5512 ..... 114, 194, 196, 198, 320, 450
6647 ..... 4, 54, 206
6649 192
7642 ..... 2, 192, 302, 306, 410, 454, 458, 466
7674 ..... 180, 250, 254, 260, 262, 268, 274, 472
7900 ..... 192, 196, 198
8218 12
9213 310
9333 310
10254 56
13125 ..... 190, 380, 458
13298 52
13617 468
14338 ..... 6, 458, 468, 472
15903 152
16010 ..... 188, 192
16087 2
16235 114
16266 192
16661 ..... 360, 458, 468, 472, 482
16681 ..... 98, 104, 108
17958 80
18349 116
18523 ..... 134, 194
18525 56
18589 ..... 376, 456
18590 ..... 74, 294, 366
18591 ..... 114, 130, 194, 260
18592 ..... 118, 394
18596 ..... 130, 224, 230
18597 366
18598 ..... 6, 54, 74, 250, 312, 366
18599 ..... 48, 74, 100, 104, 114, 130, 194, 250, 320
18600 ..... 80, 116, 194, 320
18601 ..... 56, 194, 316, 362
18603 ..... 48, 60, 68
18604 ..... 72, 366
18605 ..... 114, 366
18607 ..... 98, 274
18608 362
18609 ..... 2, 116, 348, 362
18624 ..... 104, 110, 114, 166, 174
18626 ..... 116, 316
18635 ..... 130, 254, 260, 262, 268, 274
18636 320
18637 ..... 54, 74, 180, 228, 232, 244, 246, 250, 256, 260, 264, 268, 274, 320, 362, 450
18638 ..... 216, 222, 230, 240, 246, 250, 296, 312, 320
18639 320
18640 ..... 54, 326, 330, 334, 362, 450
18648 ..... 100, 104, 108, 110, 114, 116, 190, 196, 198, 316
18652 ..... 320, 384, 430
18654 ..... 4, 8, 12, 16, 18, 200
18664 ..... 100, 110
18666 ..... 48, 54, 118, 134
18669 ..... 86, 94, 134, 364
18670 ..... 8, 12, 186
18671 ..... 98, 104, 108, 114, 190, 310, 362
18688 ..... 8, 12, 118
18697 ..... 48, 54, 74, 100, 104, 110, 194, 222, 228, 230, 240, 244, 246
18720 ..... 326, 330, 334, 450
18723 ..... 4, 48, 186, 228, 234, 240, 244, 246, 276
18724 ..... 224, 232, 250, 260, 268, 276, 366
18725 ..... 98, 104, 108
18738 100
18768 ..... 234, 238, 240, 244, 246
18770 ..... 118, 182
18866 ..... 194, 196
18867 ..... 72, 362
18898 318
18916 ..... 194, 196, 198
18963 ..... 62, 66
19634 188
19927 190
19965 ..... 74, 134, 162, 216, 220, 222, 230, 238, 240, 246, 344, 460, 470
19966 ..... 74, 188, 202, 250
20012 484
20055 ..... 106, 112
20077 ..... 74, 228, 232, 244, 246, 256, 260, 274, 344
20078 ..... 126, 286
20312 ..... 116, 362
20535 ..... 6, 74
21006 48
21010 ..... 52, 190
21030 152
21055 ..... 6, 188, 194
21056 ..... 4, 130, 176, 194
21066 ..... 48, 54, 74, 194
21069 ..... 60, 62, 64, 66, 68, 160, 214, 218, 226, 238, 242
21102 ..... 168, 184, 366
21153 ..... 190, 196, 198
21194 ..... 48, 52
21218 128
21235 308
21264 ..... 54, 250, 364
21281 134
21282 ..... 376, 456
21301 288

INDEX

21354.....222, 230
21363..... 318
21376.....190, 196, 198
21383.....4, 48, 54, 86, 94, 168
21389.....54
21403..... 134
21404..... 188
21406.....50, 56
21425..... 318
21447.....122, 126
21452..... 50, 56, 100, 110, 334, 336
21455.....100, 110, 130, 184, 252, 454, 456, 460, 472
21456..... 320
21468.....12
21469.....86, 94
21471.....54, 74, 376, 456
21472..... 50, 56, 122, 126, 186, 250, 256, 260, 264, 268, 276, 294, 320, 402
21484.....116, 250
21489..... 130
21491.....4, 48, 54, 74, 100, 104, 110, 114, 224, 230, 240, 246, 250, 260, 276, 320, 330, 334
21522..... 320
21526..... 250
21540..... 194, 196, 198, 362
21558..... 188
21560..... 194
21561.....134, 252
21567.....4, 180, 252, 256, 260, 264, 268, 276
21568..... 184
21570.....260, 268, 276
21572.....100, 110, 454, 456, 460, 472
21573.....130, 184, 252
21575.....74, 102, 106, 110, 112, 114, 174, 180, 216, 222, 230, 240, 246, 296
21576.....130, 194
21577..... 196
21578.....194, 222, 230
21580..... 216, 220, 238, 254, 260, 262, 268, 274
21582.....80
21583..... 48, 54, 196
21589..... 114
21590..... 256, 260, 264, 268, 274
21591..... 194
21594..... 320
21599..... 194
21746..... 248
21760.....130, 216, 220, 228, 238, 244
21761..... 154
21763..... 6, 80, 120, 124, 128, 152, 184, 250, 284, 348, 370, 382, 386, 390, 396, 400, 416, 418, 426, 428, 432, 434, 438
21801..... 64, 66, 214, 218, 226, 236, 242
21810..... 214, 218, 222, 226, 230, 236, 242
21821..... 6, 100, 104, 110, 122, 126, 130, 260, 268, 276, 320
21830.....66
21843..... 158, 248, 260, 268, 274
21854.....216, 220, 222, 228, 230, 238, 244, 250, 260, 268, 276
21856.....400, 426
21858.....400, 426
21859.....52, 214, 222, 230, 234, 240, 246
21863..... 4, 6, 50, 54, 74, 76, 78, 80, 100, 110, 122, 126, 130, 160, 180, 186, 188, 196, 216, 220, 228, 238, 244, 250, 276, 366
21868.....194, 376, 456
21881.....258, 266, 272
21887.....190, 196, 198
21926..... 366
21941.....4, 16, 194
21947.....404, 442
21968.....100, 110
23163..... 372
23164..... 136
23165.....136, 372
23745..... 392
23950..... 150
23957..... 150
25991..... 150
26846..... 318
27647.....384, 430
29028..... 192
29934..... 426
30027..... 100, 104, 110, 114, 130
30034.....52
30035..... 100
30054..... 248, 258, 266, 272
30191.....326, 330, 334
30203..... 318
30209..... 100, 104, 114, 118
30228.....4, 6, 50, 54, 74, 76, 78, 80, 86, 94, 96, 100, 106, 112, 116, 122, 126, 130, 134, 158, 162, 168, 180, 186, 188, 194, 196, 202, 212, 216, 220, 222, 228, 230, 238, 240, 244, 246, 250, 256, 260, 264, 268, 274, 286, 294, 320, 344, 366, 384, 402, 430, 460, 470
30280..... 6, 152, 180, 188, 250, 264, 268, 274, 366, 396, 438
30282.....120, 124
30284.....120, 124
30299.....54
30307..... 250
30314.....60, 62, 254, 262, 274, 352
30316..... 372
30368..... 168
30375.....120, 124
30376..... 68, 216, 218, 226, 238, 242
30433.....254, 258

30441.....74, 118, 158, 194
30463..... 362
30504.....6, 180, 264, 268, 274
30505.....312, 316
30512..... 116
30514.....54
30515..... 168
30516.....192, 196, 198
30517.....190, 196, 198
30520..... 114, 190, 196, 198
30523.....84, 92
30548.....52
30549..... 118
30551.....248, 274
30556..... 158, 250, 258, 266, 272
30557..... 158
30610.....60, 68
30627.....234, 238, 240, 244, 246, 364
30628..... 292
30630.....336, 394
30632.....234, 238, 240, 244, 246, 386, 460
30636.....264, 268
30639.....80
30661.....214, 222, 230, 234, 240, 246
30669.....34, 46
30693..... 50, 54, 62, 66, 74, 250, 348
30695..... 158
30701..... 318
30702..... 318
30715..... 298
30716.....206, 208
30753..... 126, 128, 250, 350, 352, 404, 442, 482
30759.....256, 260, 276
30813..... 396, 400, 416, 430, 438
30819.....60, 62, 64, 66, 68
30824..... 116
30833..... 194
30873.....158, 214, 218, 226, 236, 242
30875..... 158
30922..... 194
30934.....218, 222, 226, 230, 234, 236, 240, 242, 246
30970.....64
30971.....152, 324, 328, 332, 334, 356
30981.....60, 62, 64, 66, 68, 158, 214, 218, 226, 238, 242
30999..... 446
31465..... 312
31774..... 100, 104, 110, 364
31889..... 62, 66, 346
32070.....136, 372
32247.....412, 436
32879..... 150
32880..... 150
33955.....22
34359.....8, 200
34980.....8, 18, 200
35618..... 192
35694..... 190
36651..... 372
36849..... 124
37167.....396, 438
39272..... 188
40095..... 340
40628..... 188
40701.....120, 124, 152, 382, 386, 396, 400, 414, 426, 428, 438
40702.....120, 124, 152, 348, 352, 382, 386, 396, 400, 414, 426, 428, 438
40703.....60, 62, 64, 66, 68, 152, 352, 414
40704.....60, 62, 64, 66, 68, 152, 352, 414
40915..... 102, 106, 112, 166, 174
41982.....190, 196, 198
42074..... 384, 386, 430, 458
42292.....370, 426
42589..... 382, 386, 396, 400, 414, 426, 428, 438
42592.....74
44209.....152, 326, 338, 352, 396, 438, 470
44210.....324, 328, 330, 336, 350, 356, 382, 386, 400, 414, 426, 458
44611..... 372
45427.....214, 222, 230, 240, 246, 250
47858.....52
48050..... 194
49227.....120, 126, 152, 348, 382, 386, 396, 400, 414, 426, 428, 438
49232.....384, 386, 396, 400, 426, 438
49306.....52, 214, 222, 230, 234, 240, 246
49341..... 116
50019..... 248, 258, 266, 272
50022.....80, 100, 120, 158
50050..... 216, 218, 226, 236, 242
50072..... 194
50076.....60, 62, 64, 66, 68
50083..... 308
50086.....60, 62, 64, 66, 68
50101..... 202
50102.....260, 268
50103.....80, 120, 124
50104.....68, 80, 158, 214, 218, 226, 236, 242
50119.....8, 200
50120.....8, 20, 200
50139.....298, 300, 478
50154..... 312
50155.....312, 344
50174.....190, 196, 198
50175.....226, 242
50178..... 384, 386, 396, 416, 438
50184.....84, 90
50186..... 48, 54, 74, 86, 94, 96, 100, 106, 110, 114, 116, 168, 174, 180, 182, 186, 194, 202, 234, 240, 246, 276, 376, 456

INDEX

50187 52
50188 54
50193 134
50197 194
50219 ..... 348, 356, 396, 400, 414, 426, 438, 470
50220 ..... 324, 328, 332, 338, 356
50223 ..... 326, 330, 334, 338, 352, 356
50225 ..... 6, 56, 116, 134, 188, 194, 196, 256, 260, 276, 392
50226 48
100456 ..... 188, 194, 260, 268, 276
100500 ..... 22, 362
100532 ..... 48, 52, 58
100706 58
100707 58
100708 58
100709 58
100710 58
100712 58
100714 58
100715 58
100716 58
100717 58
100718 58
100719 58
100720 58
100721 58
100722 58
100723 58
100726 58
100862 288
101007 ..... 190, 196, 198
101853 52
101897 ..... 74, 188, 228, 230, 244, 246
101898 ..... 76, 80, 100, 104, 110, 122, 134, 152, 166, 188, 194, 294
102264 ..... 2, 204
102509 ..... 48, 52
102629 58
102630 58
102636 ..... 54, 118, 194, 362
103096 58
103351 80
103562 ..... 4, 16, 194
103575 346
103738 ..... 98, 110, 120, 216, 220, 226, 238, 242, 250, 254, 258, 272, 350
103879 114
105066 ..... 86, 94
105069 ..... 100, 110
105135 ..... 86, 94
105136 ..... 86, 94, 96, 202
105141 ..... 86, 94
105364 114
106708 120
108172 ..... 234, 240, 246
108233 ..... 396, 400, 416, 430, 438
108268 ..... 64, 66, 68, 158, 214, 218, 226, 236, 242
109064 ..... 360, 468
109089 130
109613 368
109717 202
109773 482
109791 346
109843 136
111221 136
111528 348
111895 52
111978 ..... 248, 254, 258, 262, 266, 274
111981 ..... 152, 470
111982 ..... 152, 470
111983 ..... 152, 470
111984 ..... 152, 470
111985 ..... 152, 470
111986 ..... 152, 470
112129 54
112130 316
112184 ..... 214, 218, 236
112866 ..... 326, 330, 332
112867 332
112868 ..... 326, 330, 332, 334
112935 ..... 260, 268, 274
112968 52
113152 58
113153 58
113160 52
113161 52
113222 ..... 22, 362
113229 ..... 48, 52
113420 ..... 86, 94
113435 ..... 98, 104, 108, 114
113482 136
113536 184
113561 ..... 184, 188, 412, 436
113566 188
113814 4
113881 124
113937 22
114120 426
114140 426
114142 ..... 400, 426
114143 ..... 400, 426
114233 ..... 100, 110
115145 138
115146 ..... 138, 184, 258, 266
115147 ..... 138, 184, 258, 266
115148 184
115670 22
115672 ..... 330, 334
117015 194

INDEX

118011 288
118137 ..... 2, 100, 104, 110, 114, 166, 174, 188, 296, 468
118154 ..... 8, 12, 16, 18
118162 ..... 10, 14, 18
118185 288
118193 ..... 8, 12, 14, 18
118239 ..... 184, 188
118301 ..... 10, 18, 170, 172
118302 ..... 10, 14, 170, 172
118344 ..... 10, 14, 18, 170, 172
118345 ..... 10, 14, 18, 170, 172
118346 ..... 8, 10, 200
118347 ..... 8, 10, 200
118351 ..... 8, 10
118491 ..... 22, 26, 28, 36, 38
119282 204
119284 204
119285 204
119384 204
119392 204
119415 ..... 204, 210
119442 204
119446 204
119447 204
119454 204
119455 204
119457 ..... 204, 210
119460 204
119518 210
119519 210
119530 ..... 204, 210
119531 210
119543 204
119722 ..... 204, 208
119723 ..... 204, 208
119728 204
119729 204
119747 204
120009 72
120056 52
120057 52
120058 70
120127 2
120140 48
120141 48
120194 48
120232 54
120358 52
120359 52
120360 52
120364 52
120365 54
120366 52
120377 ..... 64, 66
120462 70
120552 ..... 120, 124
120558 ..... 8, 12, 16, 18
120568 80
120570 80
120573 ..... 62, 66
120574 ..... 62, 66
120575 ..... 62, 66
120577 ..... 62, 66
120639 ..... 8, 12, 16, 158
120754 52
120755 52
120812 52
120814 52
120832 22
120845 ..... 70, 158
120899 ..... 48, 54
120900 ..... 48, 54
120901 ..... 48, 54
120932 ..... 180, 254, 262, 266, 272
120933 ..... 180, 258, 272
120988 80
120996 124
123084 464
123180 ..... 302, 306, 410, 444, 454, 458, 466
123202 464
123306 70
123406 312
123598 124
123599 126
123620 124
123627 104
123660 2
123661 2
123662 78
123663 120
123670 98
123673 124
123676 120
123681 176
123682 176
123701 ..... 120, 124
123702 ..... 120, 124
123703 124
123751 2
123752 2
123937 78
123938 78
123939 78
123940 78
123948 70
123949 70
123978 348
124338 ..... 18, 172
124344 ..... 18, 172
124399 ..... 2, 296

INDEX

124775 200
124880 24
124881 24
125145 296
125146 296
125176 6
125229 250
125236 192
125256 190
125343 128
125363 2
125393 134
125418 ..... 4, 14
125433 116
125435 116
125530 ..... 48, 54
125553 152
125571 136
125572 136
125588 72
125589 72
125602 70
125607 70
125622 72
125654 362
125670 68
125672 68
125722 ..... 60, 68, 120, 124
125741 76
125742 76
125764 ..... 48, 54
129043 ..... 26, 28, 30, 32, 34, 36, 38, 40, 42, 44, 46
129148 ..... 390, 434, 458
129149 428
129297 ..... 8, 10, 14, 18
129299 ..... 28, 32, 34, 38, 42, 46
129313 136
129329 24
129481 414
129577 178
129578 178
129581 178
129582 178
129584 178
129589 178
129772 418
129773 418
129800 ..... 152, 396, 438
129801 ..... 152, 396, 438
129847 ..... 116, 182
129913 72
129965 418
129976 ..... 152, 396, 438
129977 ..... 152, 396, 438
130283 288
131391 136
131392 136
131393 136
132017 80
132033 ..... 48, 52
132096 72
132117 80
132248 ..... 180, 254, 262, 266, 272
132253 ..... 180, 258, 272
132265 2
132266 2
132269 2
132303 ..... 214, 222, 230, 240, 246
132404 ..... 8, 20, 200
132405 200
132415 52
132418 250
132420 2
132451 ..... 74, 158
132474 116
132475 116
132476 116
132531 72
132532 72
132607 ..... 70, 158, 308
132692 72
132773 ..... 180, 248, 254, 258, 262, 266, 272
132777 74
132852 ..... 136, 138
132867 80
132870 80
132871 80
132896 22
132897 22
132903 ..... 60, 64
132904 ..... 60, 64
132911 ..... 120, 124
132912 124
133047 364
133086 372
133138 ..... 412, 436
133165 ..... 344, 458, 468
133166 ..... 344, 458, 468
133241 394
133242 394
133372 288
133421 318
133439 ..... 412, 436
133537 372
133631 340
133632 340
133634 340
133637 340
133640 340
133641 340

133672 ..... 374, 454
133683 420
133716 472
133751 2
133781 ..... 468, 472
133877 306
133942 284
133980 374
133981 374
133992 ..... 192, 196
133997 ..... 458, 472
134002 6
134003 6
134010 ..... 130, 404, 426, 442
134011 ..... 130, 404, 426, 442
134053 ..... 404, 442
134438 4
134443 128
134741 ..... 128, 434
134746 ..... 370, 390, 404, 406, 418, 432, 434, 442
134948 432
134954 128
135015 152
135148 150
135157 ..... 6, 50, 74, 76, 96, 100, 110, 158, 202, 216, 220, 238, 312
135161 484
135182 62
135190 ..... 62, 66
135193 ..... 228, 244
135204 152
135205 152
135213 ..... 248, 254, 258, 262, 266, 272
135233 ..... 128, 166, 184, 250
135234 ..... 120, 124, 128
135235 ..... 258, 266, 272
135236 152
135237 152
135238 ..... 152, 470
135240 ..... 60, 68, 216, 218, 226, 236, 242
135241 248
135248 ..... 188, 216, 220, 228, 238, 244, 260, 268, 276, 366
135255 ..... 64, 66
135267 ..... 390, 434
135290 310
135305 366
135312 152
135319 288
135337 ..... 132, 216, 220, 238, 288, 292, 298, 376, 386, 400, 416, 456, 460, 470, 478
135340 4
135358 ..... 320, 450
135367 ..... 116, 276
135369 ..... 330, 334
135372 ..... 60, 62, 64, 66, 68
135373 152
135381 ..... 320, 450
135386 ..... 248, 254, 258, 262, 266, 274
135397 ..... 152, 396, 438
135400 ..... 324, 328
135401 338
135423 366
135434 ..... 158, 250
135443 ..... 120, 124, 128, 158, 216, 220, 226, 238, 242, 250, 274, 370
135444 ..... 124, 128, 216, 220, 226, 238, 242, 352, 382, 386, 396, 400, 416, 426, 428, 438
135448 134
135450 212
135474 152
135507 ..... 216, 220, 222, 228, 230, 238, 240, 244, 246, 256, 260, 276
135511 ..... 260, 268, 276
135540 248
135554 ..... 324, 326, 330, 332, 334, 338, 352, 356
135565 152
135566 152
135579 ..... 4, 206, 250
135587 356
135598 382
135612 64
135613 ..... 254, 258
135623 188
135626 ..... 24, 28, 32, 38, 42, 158, 288
135628 ..... 24, 158
135630 ..... 24, 288
135632 24
135647 ..... 226, 242
135655 392
135665 ..... 250, 274
135671 476
135685 ..... 68, 214, 218, 236, 248, 274
135691 326
135694 320
135704 188
135709 ..... 260, 268, 274, 418
135718 284
135723 ..... 378, 444, 474
135734 356
135737 118
135748 320
135775 356
135777 ..... 338, 352
135778 ..... 348, 426
135780 ..... 396, 438, 470
135785 ..... 206, 210, 234, 240, 246, 284, 292, 314, 316, 476
135786 ..... 324, 328, 332
135791 356

INDEX

135799 .....204, 210, 234, 240, 246, 284, 286, 288, 292, 298, 302, 312, 316, 320, 326, 330, 334, 344, 362, 374, 378, 380, 384, 388, 394, 396, 410, 412, 416, 426, 430, 436, 438, 444, 456, 460, 470, 474, 476
135800 354
135818 ..... 216, 220, 238, 370
135860 .....384, 386
135865 .....326, 330, 338, 348, 352, 356, 396, 400, 414, 426, 438
135866 .....334, 350, 352, 356, 396, 400, 414, 438, 470
135867 .....324, 328, 332, 336, 350, 356, 382, 386, 426, 458
135868 ..... 324, 328, 332, 352, 356
135873 .....284, 480
135890 334
135894 .....386, 460
135900 314
135901 .....324, 328, 332
135903 ..... 380, 458, 470, 486
135906 74
135917 414
135957 ..... 326, 330, 334, 356, 414
135963 .....216, 220, 238
135966 .....216, 220, 238
135995 .....348, 362
136024 ..... 326, 336, 338, 448
136036 .....290, 412, 436
136050 292
136089 .....324, 328, 336
136095 ..... 348, 356, 400, 414, 430
136106 328
136108 414
136110 .....334, 336, 354
136113 ..... 234, 240, 246, 298
136137 320
136141 .....380, 460
136151 .....346, 350, 364, 368, 426, 476
136167 .....468, 472
136178 .....378, 412, 426, 436, 444, 474
136181 382
136209 .....156, 384, 388, 398, 402, 416, 426, 430, 440
136231 298
136246 .....324, 328, 336
136248 288
136265 400
136266 .....384, 386
136291 312
136300 470
136303 356
136324 284
136325 .....348, 384, 386, 396, 400, 416, 438
136326 .....384, 386, 400
136337 352
136347 ..... 324, 328, 332, 356
136378 316
136410 ..... 120, 126, 128, 366, 476
136418 356
136431 .....166, 312, 320, 344, 374, 380, 392, 394, 412, 422, 424, 436, 454, 458, 466, 470, 486
136440 .....312, 320, 348
136441 312
136447 .....326, 330, 334
136455 320
136458 356
136476 .....380, 460
136485 .....300, 384, 386, 396, 402, 416, 426, 430, 438, 478
136503 414
136506 .....204, 412, 436
136519 414
136561 ..... 132, 312, 354, 394
136596 364
136604 132
136613 .....132, 366, 476
136625 .....374, 392, 412, 422, 424, 436, 466
136652 252
136654 248
136655 .....128, 370, 476
136684 352
136699 348
136704 364
136736 312
136741 400
136748 .....132, 408
136757 312
136759 .....264, 270, 306
136760 350
136766 .....324, 338
136773 132
136824 .....216, 220, 238
136841 314
136846 330
136868 184
136886 300
136952 ..... 216, 218, 226, 236, 242
137092 .....82, 92
137118 .....86, 94
137142 .....84, 90
137221 .....98, 104, 108
137277 .....84, 90
137285 .....82, 90
137291 ..... 98, 108
137315 .....98, 104, 108
137347 ..... 98, 108
137348 .....100, 110
137350 .....100, 110
137352 ..... 98, 108
137354 ..... 98, 108
137356 .....100, 110

INDEX

137375 ..... 98, 100, 104, 108, 110, 214, 218, 226, 236, 242
137415 88
137416 90
137421 82
137422 82
137451 104
137456 104
137476 ..... 98, 104, 108
137503 ..... 100, 110
137506 ..... 82, 90
137515 ..... 98, 108
137519 ..... 82, 92
137523 ..... 84, 92
137529 ..... 84, 92
137532 ..... 84, 92
137535 ..... 82, 90
137536 ..... 84, 90
137543 ..... 82, 90
137568 ..... 82, 88
137569 ..... 82, 90
137570 88
137571 90
137626 ..... 98, 104, 108, 114, 204
137642 82
137643 82
137650 82
137651 82
137691 108
137699 ..... 84, 92
137702 ..... 100, 112
137721 ..... 98, 108
137727 ..... 74, 130, 216, 220, 228, 238, 244
137753 ..... 100, 104, 110
137754 ..... 82, 92
137794 168
137795 168
137825 108
137826 108
137827 108
137909 86
137910 94
137911 86
137912 86
137913 94
137914 86
137915 94
137916 94
137917 94
137918 94
137924 168
137968 94
137969 94
137970 ..... 100, 110
137971 92
137980 ..... 82, 90
138086 184
138087 184
139003 58
139630 ..... 128, 184
139631 184
139632 184
139633 184
140135 ..... 8, 10, 14, 18
140225 372
140250 104
142777 340
143875 128
144321 192
144324 192
144374 190
144376 192
144378 ..... 190, 196, 198
144409 192
144415 ..... 188, 192
144425 190
144433 192
144471 190
144505 ..... 192, 292
144531 ..... 190, 196, 198
144577 190
144724 190
144739 190
144741 190
144742 190
144860 196
144873 190
144880 ..... 192, 196
144899 ..... 190, 196
144934 ..... 192, 196
144935 196
144956 192
144962 192
144966 ..... 192, 196
144968 190
144971 190
144976 190
144989 192
145106 70
145122 70
145148 70
145249 ..... 74, 158
145345 70
145357 70
145361 74
145384 52
145428 70
145461 116
145548 70
145558 80

INDEX

145593 70
145706 48
145840 72
148645 252
148798 166
150890 340
150891 340
151192 116
151551 294
151691 310
151793 310
151941 ..... 422, 424, 466
151942 ..... 422, 424, 466
152439 ..... 376, 392, 410, 456
152520 290
152655 ..... 284, 348, 354, 378, 384, 386, 398, 402, 416, 418, 430, 440, 444, 470, 474
152668 ..... 132, 252, 284, 300, 314, 364, 368, 408, 476
152730 ..... 312, 374, 376, 380, 454, 456, 460
152732 ..... 330, 426
152736 ..... 454, 458, 472
152863 156
153151 ..... 152, 396, 438
153933 ..... 404, 442
156037 318
156051 346
156501 ..... 192, 362
156574 362
156725 ..... 382, 386, 396, 400, 414, 426, 428, 438
156741 362
156743 ..... 306, 314, 364
156783 ..... 412, 436
156839 362
156843 366
156868 294
156948 392
156969 366
158080 ..... 380, 458
158217 136
158253 426
158377 ..... 360, 468
158704 ..... 366, 476
159020 292
159587 80
163184 ..... 414, 430
163598 ..... 384, 386, 396, 400, 416, 426, 430, 438
164009 6
164044 84
164045 84
164046 84
164061 ..... 100, 104, 110
164109 108
164126 ..... 100, 110
164131 ..... 458, 468, 472
164141 108
164213 ..... 98, 104, 108
164214 ..... 98, 104, 108
164215 114
164216 114
164750 ..... 98, 108
164754 96
164773 116
164780 114
164781 114
164800 ..... 116, 180
164815 ..... 98, 108
164817 ..... 98, 108
164821 104
164825 ..... 116, 180
164855 108
164858 110
164885 110
164887 ..... 98, 104
164894 90
164895 92
164930 ..... 98, 104
164933 ..... 98, 104, 108
164934 114
164945 ..... 98, 104, 114
164947 108
164948 108
164953 ..... 98, 104
164955 98
164958 96
164965 96
164967 96
164988 212
164993 212
164995 212
165103 ..... 248, 254, 258, 262, 266, 272
165168 134
165188 134
165209 ..... 8, 10
165218 372
165267 ..... 120, 124
165294 68
165297 68
165380 248
165386 134
165417 ..... 62, 66
165429 134
165524 ..... 6, 138
165588 134
165722 134
165727 134
165735 ..... 70, 158
165858 6
165973 138
166309 146
166450 480

INDEX

166466 136
170851 352
171068 184
171277 342
172133 134
172134 134
172142 128
172146 124
172155 116
172158 116
172175 124
172183 120
172184 120
172185 120
172186 120
172195 72
172196 72
172197 72
172198 72
172220 120
172221 120
172222 120
172223 120
172259 ..... 6, 74, 158
172340 ..... 214, 222, 230, 240, 246
172363 74
172507 ..... 222, 230
172511 ..... 222, 230
172558 312
172710 74
172809 52
172812 52
172875 176
172877 ..... 120, 124, 262, 268
172897 124
172899 128
172922 116
172948 138
172951 138
172978 ..... 120, 124
172981 120
172982 120
172983 120
172985 124
172986 120
172988 120
172993 ..... 120, 124
174035 222
174081 ..... 222, 230
174082 ..... 222, 230
174131 372
174149 124
174165 24
174168 ..... 226, 242
174176 ..... 230, 246
174215 48
174217 48
174238 248
174240 248
174242 248
174243 248
174256 68
174258 ..... 60, 68
174259 60
174260 68
174262 248
174263 248
174270 48
174299 68
174300 68
174304 ..... 48, 214, 218, 226, 236, 242
174318 248
174321 248
174322 248
174324 248
174333 116
174356 ..... 62, 66
174357 ..... 62, 66
174391 2
174400 2
174407 124
174408 124
174422 ..... 248, 258, 266, 272
174436 ..... 136, 372
174501 52
174502 52
174513 250
174514 250
174521 250
174528 162
174538 250
174547 248
174559 162
174560 162
174585 248
174586 250
174632 136
174684 136
174695 158
174697 158
174706 158
174707 158
174708 158
174709 158
174710 158
174714 70
174775 296
174816 362
174845 ..... 22, 30, 32, 40, 42
174849 ..... 82, 90

174857 22
174858 118
174883 250
174922 ..... 192, 196
174926 184
174992 ..... 48, 52
176009 116
180094 332
183506 308
183508 310
184372 136
184422 136
184437 472
184440 ..... 456, 472
184461 ..... 356, 386, 426, 458
184462 ..... 330, 400, 426
184463 ..... 350, 356, 400
184572 ..... 376, 456
184579 250
184589 ..... 224, 470
184648 ..... 292, 400
184649 298
184652 ..... 206, 208, 292, 416
184655 ..... 264, 268, 288
184657 ..... 284, 298, 302, 384, 386, 396, 410, 412, 416, 426, 430, 436, 438, 456
184661 326
184662 ..... 286, 312, 320, 326, 330, 334, 344, 362, 374, 380, 394, 460, 470
184667 ..... 320, 374, 376, 394, 454, 456, 470
184669 ..... 264, 268, 392, 412, 422, 424, 436, 466, 470
184674 ..... 264, 268
184675 ..... 306, 412, 436
184683 ..... 132, 366, 476
184688 284
184694 288
184695 312
184697 470
184699 462
184701 132
184705 ..... 132, 312, 368, 394, 476
184706 300
184709 ..... 206, 208, 292
184711 ..... 292, 326, 330, 414, 430
184712 364
184714 ..... 326, 330, 336, 338, 374, 376, 380, 392, 394, 412, 422, 424, 436, 454, 456, 458, 466
184717 ..... 320, 380, 458, 470, 486
184718 6
187006 392
187018 382
187031 382
187081 464
187112 284
187137 ..... 302, 378, 410, 444, 456
187252 ..... 324, 328, 332, 448
187428 310
187466 318
187476 318
187477 318
187478 318
187480 ..... 318, 450
187481 318
187482 318
187483 320
187484 318
187485 318
187486 318
187487 318
187492 318
187494 318
187495 318
187518 312
187520 318
187524 318
187550 ..... 340, 466
187551 340
187553 ..... 340, 466
187621 348
187637 348
187641 366
187653 366
187655 366
187658 366
187659 366
187660 348
187694 366
187696 318
187697 318
187698 318
187708 366
187730 348
187732 286
187918 ..... 324, 328, 332, 448
188467 194
190752 292
190866 414
191489 ..... 132, 376, 456, 470
191705 ..... 326, 338
193008 190
193009 192
193014 192
193016 192
193022 192
193031 ..... 190, 196, 198
193034 136
193057 ..... 188, 190
193058 188
193059 188
193183 188

193187 188
193188 188
193202 188
193211 194
193212 188
193214 ..... 190, 196
193215 ..... 190, 196
193216 192
193217 192
193240 184
193241 184
193242 184
193243 184
194033 ..... 326, 330, 334
194082 ..... 396, 414, 438
194521 372
197122 312
197154 462
197171 ..... 156, 292, 298, 478
197229 ..... 366, 476
197230 ..... 132, 366, 476
197263 ..... 302, 306, 378, 410, 444, 454, 456, 460, 466, 474
197319 470
197320 470
202991 ..... 262, 266
203547 128
209032 352
209045 482
212250 362
213084 ..... 302, 378, 410, 444, 454, 456, 458, 466, 474
213097 310
213098 310
213110 310
213112 310
213153 310
213167 352
213174 352
213182 ..... 396, 438
213184 ..... 396, 438
213204 ..... 396, 438
213205 ..... 396, 438
213211 ..... 404, 442
213234 294
213264 428
213281 382
213295 478
213307 348
213329 352
213340 298
213350 ..... 396, 400, 438
213354 ..... 396, 438
213363 348
213374 414
213418 286
213419 286
213420 310
213459 482
213492 ..... 300, 478
213493 ..... 300, 478
213523 486
213525 486
213546 308
213552 308
213554 308
213557 308
213561 486
213562 486
213567 486
213568 486
213573 486
213574 486
213579 486
213580 486
213592 ..... 392, 410
213593 ..... 392, 410
213605 306
213608 306
213613 ..... 392, 410
213614 ..... 392, 410
213649 308
213654 308
213656 306
213657 306
213659 308
213660 306
213679 308
213731 312
213733 312
213734 288
213743 352
213750 308
213764 284
213781 372
213783 372
213801 308
213802 308
213812 482
213813 482
213821 362
213824 418
213827 350
213828 350
213833 ..... 376, 456
213834 ..... 376, 456
213843 ..... 376, 456
213844 ..... 376, 456
213845 ..... 376, 456
213851 308
213857 310

INDEX

213859 308
213864 352
213965 ..... 382, 386, 396, 414, 428, 438
220009 ..... 48, 54
220010 ..... 48, 54
220011 ..... 48, 54
220012 ..... 48, 54
220013 ..... 48, 54
220084 136
220099 192
220100 10
220101 10
220102 8
220103 8
220107 6
220114 14
220115 14
220176 72
220181 70
220183 70
220184 70
220197 248
220236 136
220264 72
220317 310
220324 250
220326 188
220391 72
220412 80
220418 72
220491 80
220570 ..... 360, 468, 482
220571 472
220572 ..... 454, 456, 458, 472
220577 136
220635 72
220636 72
220637 72
220638 72
220639 72
220640 72
220641 ..... 72, 162
220642 72
220673 136
220675 124
220676 ..... 120, 124
220679 362
220701 54
220706 54
220734 ..... 360, 488
220766 342
220797 136
220798 136
220799 136
220807 148
220808 148
220809 148
220813 148
220814 148
220817 144
220818 144
220819 144
220823 144
220824 144
220831 146
220832 146
220833 146
220834 146
220835 148
220836 144
220841 158
220849 ..... 120, 124
220863 146
220868 146
220871 146
220876 148
220885 144
220908 482
220936 ..... 70, 158
220939 ..... 84, 90, 212
220941 ..... 84, 90, 212
220944 ..... 70, 158
220951 358
220959 ..... 414, 430
220960 358
220961 358
220963 358
220965 358
226673 54
231368 286
231389 ..... 318, 452
231448 316
231534 ..... 318, 452
231647 288
231765 292
231766 292
231799 298
231800 298
232147 52
232233 ..... 262, 266
232650 ..... 132, 366, 476
233371 ..... 234, 240, 246
233395 ..... 222, 230
233450 ..... 234, 240, 246
233513 ..... 234, 240, 246
233514 ..... 234, 238, 240, 244, 246
233519 ..... 234, 240, 246
233625 ..... 234, 238, 240, 244, 246
237316 ..... 312, 412, 436
237556 462

237563 462
240010 292
240012 292
240013 292
240101 284
240254 292
240264 292
240418 298
240455 362
244671 192
244722 190
244727 184
244748 192
244760 188
245023 70
245025 70
245027 70
245029 70
245031 70
245033 70
245035 70
245037 70
245039 70
245041 70
245042 70
245083 ..... 82, 92
245084 ..... 82, 90
245114 78
245115 78
245122 288
245159 414
245160 358
245199 ..... 100, 104, 110
245246 ..... 412, 436
245266 88
245267 90
245272 94
245273 94
245276 94
245277 94
245316 288
245362 166
245396 134
245397 134
245428 142
245432 142
245433 142
245438 142
245439 142
245441 142
245443 142
245450 202
245476 136
245477 136
245620 318
245671 116
245677 2
245678 2
245753 352
245760 ..... 424, 466
245761 ..... 424, 466
245763 ..... 376, 456
245815 ..... 376, 456
245816 ..... 376, 456
245852 ..... 376, 456
245915 ..... 254, 258, 262, 266, 272
245926 174
245928 ..... 254, 262, 274
245931 ..... 254, 260, 262, 268, 274
245936 ..... 254, 262, 274
245943 48
245946 ..... 260, 268, 274
245955 ..... 258, 266, 274
245956 ..... 254, 260, 262, 268, 274
245964 80
245965 80
245966 316
245992 116
245993 116
248089 ..... 324, 336
248096 306
248117 306
248144 310
248145 306
248232 310
248261 362
248285 308
248348 316
248349 316
248388 310
248407 318
248408 318
248538 306
248643 ..... 132, 366, 476
248756 284
248757 284
248783 476
248816 476
248850 320
248914 292
248960 ..... 382, 428
252076 ..... 330, 334
252179 ..... 204, 208
252187 312
252188 312
252198 362
252208 ..... 326, 330, 332
252210 446
252272 288
252288 312

252296 ..... 248, 254, 258, 262, 266, 274
252305 194
252314 250
252368 ..... 260, 268, 274
252399 ..... 258, 266, 272
252423 58
252537 250
252541 ..... 252, 264, 270
252542 ..... 300, 478
252554 352
252564 362
252578 248
252638 312
252639 312
252640 ..... 326, 330, 334
252641 ..... 330, 334
252642 ..... 326, 336
252650 382
252655 ..... 396, 438
252662 356
252681 334
252687 ..... 86, 94
252691 312
252692 348
252693 416
252694 ..... 396, 438
252701 ..... 288, 312
252703 ..... 302, 306, 378, 410, 444, 454, 456, 460, 466, 474
252752 48
252753 52
252794 ..... 216, 220, 226, 238, 242
252795 ..... 216, 220, 226, 238, 242
252993 392
252996 372
253092 110
253164 6
253290 114
253297 6
253298 6
253299 6
253412 116
253446 ..... 214, 218, 226, 236, 242
253477 ..... 256, 260, 264, 268, 274
253499 2
253500 184
253503 90
253514 94
253515 94
253517 54
253552 ..... 4, 14
253570 ..... 254, 258, 272
253582 ..... 254, 258, 262, 266, 272
253601 6
253602 6
253624 6
253627 6
253668 ..... 254, 258, 272
253678 272
253680 272
253681 272
253696 272
253702 ..... 254, 262, 274
253703 ..... 260, 268, 274
253704 ..... 254, 262, 274
253705 ..... 260, 268, 274
253708 ..... 254, 272
253709 ..... 258, 272
253722 ..... 214, 218, 236
253728 136
253815 ..... 120, 124
253839 88
254044 66
254047 66
254089 132
254095 132
254096 132
254109 ..... 60, 68
254175 184
254179 128
254180 128
254181 128
254219 128
254220 128
254248 ..... 214, 218, 236
255004 6
255014 140
255019 6
255021 140
255041 6
255115 140
255116 140
255117 140
255131 140
255133 140
255211 64
255259 140
255260 140
255282 116
255311 66
255316 140
255317 140
255318 140
255344 128
255410 ..... 70, 158
255416 70
255417 70
255426 128
255431 158
255442 2

255460 ..... 260, 268, 274
255461 ..... 258, 266, 272
255462 ..... 258, 266, 272
255465 ..... 278, 280
255471 ..... 258, 266, 272
255497 ..... 278, 280
255506 ..... 62, 66
255509 274
255510 274
255544 ..... 278, 280
255545 ..... 278, 280
255546 280
255547 280
255554 280
255555 280
255556 280
255557 280
255558 ..... 278, 280
255559 ..... 278, 280
255560 280
255561 280
255562 ..... 278, 280
255563 ..... 278, 280
255564 280
255565 280
255567 280
255568 280
255569 280
255570 280
255573 278
255574 278
255576 278
255577 278
255579 278
255580 278
255582 278
255583 278
255678 6
255679 6
255712 88
255716 88
255735 88
255738 88
255746 88
255749 88
255788 116
255791 180
255829 ..... 214, 218, 226, 236, 242
255831 ..... 116, 182
255845 182
255866 ..... 60, 64
255883 ..... 214, 218, 222, 226, 230, 236, 240, 242, 246
255905 88
255908 88
255927 154
255928 154
255929 154
255930 154
255947 278
258107 434
258150 2
258199 6
258200 6
258253 184
258262 184
273078 ..... 98, 108
273258 ..... 98, 108
273259 ..... 98, 108
273265 ..... 84, 90
273304 ..... 100, 106, 112
273347 ..... 84, 90
273524 ..... 84, 90
273536 ..... 84, 92
274414 184
276029 316
276030 316
276033 346
276034 346
276043 366
276044 366
276057 366
276062 298
276117 298
276118 310
276140 310
276141 310
276149 318
276180 310
276183 312
276201 476
276206 308
276258 310
276259 372
276265 306
276281 366
276284 ..... 382, 386, 396, 400, 414, 426, 428, 438
276285 ..... 382, 386, 396, 400, 414, 426, 428, 438
276289 ..... 376, 456
276298 366
276301 300
276302 300
276326 372
276352 ..... 324, 328, 332, 450
276353 ..... 318, 450
276381 366
276560 346
276566 344
276567 352
276630 418
276631 482

276671 482
276679 318
276680 320
276759 408
276770 478
276806 418
276811 318
276812 318
276839 306
276859 ..... 324, 328, 332, 450
276863 366
276871 476
276899 486
276900 486
279001 ..... 258, 266, 272
279003 52
279011 ..... 382, 386, 428, 458
279012 ..... 382, 386, 428, 458
279013 ..... 382, 386, 428
279014 428
279017 ..... 260, 268, 274
279034 ..... 382, 386, 428, 458
279035 ..... 382, 386, 428, 458
279065 188
279081 320
279085 136
279144 250
279156 248
279157 248
279158 248
279159 248
279228 ..... 414, 430
279261 ..... 214, 218, 236
279310 24
279312 24
279314 24
279316 24
279398 ..... 26, 28, 36, 38
279399 ..... 26, 28, 38
279400 26
279401 26
279402 26
279403 26
279404 28
279405 ..... 30, 32, 40, 42
279406 ..... 30, 32, 42
279407 30
279408 30
279409 30
279410 30
279411 32
279412 ..... 36, 38
279413 36
279414 36
279415 36
279416 36
279417 36
279418 36
279419 38
279420 38
279421 38
279422 38
279423 38
279424 38
279425 40
279426 40
279427 40
279428 ..... 40, 42
279429 40
279430 40
279431 40
279432 40
279433 40
279434 42
279435 42
279436 42
279437 42
279468 22
279485 248
279493 392
279494 248
279498 248
279499 248
279528 136
279575 ..... 8, 16, 154, 200
279636 156
279641 ..... 22, 30, 32, 40, 42
279642 ..... 22, 26, 28, 36, 38
279689 318
279700 ..... 84, 92
279715 ..... 226, 242
279716 ..... 214, 218, 236
279717 ..... 214, 218, 236
279718 428
279737 382
279746 ..... 454, 456, 458, 472
279775 ..... 226, 242
279798 ..... 254, 258, 272
279834 ..... 226, 242
279848 24
279850 24
279851 24
279876 156
279925 ..... 226, 242
279926 ..... 230, 246
279966 ..... 216, 218, 238
279979 ..... 98, 104
279996 24
279997 24
279999 24

INDEX

283002 ..... 214, 218, 226, 236, 242
283215 418
283613 370
287031 474
287032 474
287193 358
287227 482
287272 346
287312 428
287344 414
287449 348
287450 348
287451 348
287456 414
287460 414
287461 414
287462 414
287465 414
287466 358
287467 358
287468 358
287469 358
287470 358
287471 358
287472 358
287473 358
287537 164
287587 288
287613 358
287701 362
287702 372
287705 372
287719 478
287749 482
287760 286
287768 292
287771 ..... 356, 358
287775 298
287776 298
287784 484
287797 ..... 482, 488
287814 340
287859 482
287860 428
287861 ..... 382, 386, 426, 428
287862 ..... 382, 386, 428
287863 ..... 382, 386, 428
287864 414
287865 414
287866 414
287870 414
287878 382
287879 ..... 382, 386
287883 288
287885 288
287887 ..... 302, 444, 474
287888 ..... 302, 444, 474
287889 ..... 302, 378, 410, 444, 456, 474
287890 ..... 302, 378, 410, 444, 456, 474
287894 482
287907 352
287908 352
287909 352
287910 352
287911 352
287912 350
287913 350
287914 318
287939 292
287944 482
287945 482
291484 ..... 132, 366, 476
291485 ..... 132, 366, 476
293053 ..... 300, 478
293054 300
294036 192
294037 192
294065 110
294091 192
294094 192
294097 428
294098 382
294112 48
294161 214
294163 214
294220 214
294221 ..... 218, 236
294222 ..... 218, 236
294223 ..... 218, 236
294224 ..... 226, 242
294225 ..... 226, 242
294226 ..... 218, 236
294263 ..... 216, 218, 226, 238, 242
294350 ..... 152, 470
294385 52
294392 184
294393 ..... 250, 258, 266
294394 ..... 386, 458
294424 ..... 218, 226, 236, 242
294425 ..... 222, 230, 240, 246
294426 214
294427 214
294435 214
294436 222
294437 222
294438 222
294460 14
294508 ..... 254, 258
294514 ..... 422, 424, 466
294515 226

294516 218
294517 218
294518 230
294519 218
294598 ..... 166, 174
294599 ..... 166, 174
294601 ..... 166, 174
294607 ..... 120, 126
294631 ..... 100, 104, 110
294634 ..... 98, 104, 110
294650 2
294662 2
294663 2
294664 2
294671 2
294672 2
294677 ..... 214, 222, 230, 240, 246
294681 2
294682 ..... 218, 222, 226, 230
294791 40
294792 40
294793 42
294794 42
294795 30
294796 30
294797 32
294807 188
294813 136
294815 188
294832 ..... 326, 336, 338
294833 ..... 324, 328, 336
294858 74
294859 74
294874 128
294890 324
294938 352
294947 ..... 22, 34, 44, 46
294949 346
294985 ..... 254, 258
294995 ..... 260, 268
294996 68
295013 408
295139 ..... 326, 336
295140 ..... 326, 338
295179 476
295211 292
295212 292
295213 292
295215 292
295216 292
295242 324
295261 298
295348 478
295349 478
295401 408
295476 478
295478 478
295513 478
295514 478
295542 298
295611 478
295703 446
295710 420
295927 352
295981 284
295998 ..... 324, 328, 332, 448
296554 ..... 214, 222, 240
296556 ..... 214, 218, 236
300536 468
300978 468
301104 420
301126 298
301127 298
301185 468
301193 468
301200 468
301202 468
301369 142
301441 310
301451 ..... 380, 458
301495 148
301496 144
301497 146
301513 362
301629 ..... 412, 436
301663 318
301693 ..... 396, 404, 438, 442
301704 ..... 340, 468
301726 478
301763 470
301764 470
301765 470
301766 470
301805 316
301806 316
301807 316
301810 310
301865 476
301902 320
301912 310
301955 310
301992 310
301993 310
301994 310
301996 340
301997 342
302030 ..... 386, 458
302204 ..... 136, 372
304017 ..... 100, 104
304018 110

304019 114
304021 202
304034 362
304035 362
304040 298
304111 360
304124 140
304125 140
304126 140
304127 140
304128 140
304129 140
304130 140
304131 140
304132 140
304133 140
304134 140
304135 140
304139 140
304140 140
304141 140
304142 140
304143 140
304144 140
304160 300
304161 300
304210 ..... 360, 468, 482, 488
304211 ..... 360, 468, 482, 488
304216 ..... 360, 482, 488
304222 116
304228 116
304254 482
304257 76
304258 76
304304 6
304314 116
304320 ..... 62, 66
304322 ..... 62, 66
304325 284
304370 482
304376 482
304377 482
304382 292
304390 128
304391 128
304392 128
304393 128
304394 128
304395 128
304454 288
304494 302
304514 308
304520 308
304521 310
304533 ..... 468, 472
304576 390
304601 6
304602 6
304611 282
304612 282
304614 282
304615 282
304616 282
304617 282
304618 282
304619 282
304620 282
304621 282
304622 282
304623 282
304624 282
304625 282
304668 346
304674 366
304748 288
304775 300
304779 300
304783 70
304786 300
304800 450
304865 136
304926 292
304927 292
304931 310
304954 ..... 84, 92
304955 ..... 84, 90, 92
304982 ..... 468, 472
304985 ..... 14, 18, 172
304986 ..... 14, 18, 172
304987 ..... 14, 18, 172
304988 ..... 14, 18, 172
304989 ..... 14, 18, 172
304990 ..... 10, 170
304991 ..... 10, 170
304992 ..... 10, 170
304993 ..... 10, 170
308015 344
308056 312
308124 344
308133 310
308134 308
308187 310
308642 306
308850 308
308859 312
308871 302
311466 ..... 324, 338
311491 348
311615 ..... 84, 92
311617 ..... 84, 90

INDEX

311620 ..... 98, 108
311707 ..... 390, 458
311750 348
311859 362
312706 284
312824 480
312908 372
313873 134
313875 134
314306 ..... 340, 458
314307 468
314627 468
314653 342
314656 340
314657 340
314658 342
314678 ..... 380, 458
314684 468
320116 ..... 328, 332
320237 314
320284 ..... 414, 430
320360 352
320397 284
320414 328
320415 328
320417 332
320438 332
322113 468
322145 362
322198 342
322199 342
322202 342
322203 342
322205 342
322207 342
322208 342
322209 342
322210 342
322211 342
322212 342
322234 342
322257 342
322258 342
322259 342
322692 400
322695 400
322739 400
322742 400
322744 400
322748 406
322751 400
322752 400
322783 394
322862 394
326217 324
326218 ..... 324, 328
326222 332
326231 ..... 336, 354
326237 332
326240 352
326242 352
326243 352
326286 328
326292 328
326293 330
326294 330
326296 332
326297 334
326298 334
326299 336
326300 338
328356 ..... 412, 436
328372 394
328381 394
328500 312
328582 ..... 412, 436
335008 ..... 386, 458
335059 ..... 386, 458
335171 288
335173 288
335242 ..... 302, 306, 308
335244 302
335245 302
335270 394
335286 286
335301 2
335326 24
335336 236
335337 240
335341 414
335342 430
335354 312
335446 324
335447 324
335464 464
335478 236
335479 36
335480 240
335483 36
335484 36
335485 38
335486 38
335487 38
335488 26
335489 26
335490 26
335491 26
335492 28
335508 44
335509 44

335510 44
335511 44
335512 46
335513 34
335514 34
335515 34
335516 34
335519 44
335520 44
335521 46
335522 44
335523 44
335525 44
335526 44
335527 44
335528 46
335529 44
335530 34
335531 34
335532 ..... 44, 46
335533 ..... 34, 44, 46
335534 ..... 34, 44, 46
335535 34
335536 34
335589 ..... 222, 230, 234
335592 ..... 222, 230, 240, 246
335598 246
335600 242
335608 134
335610 234
335615 ..... 234, 240, 246
335622 ..... 234, 240
335625 ..... 234, 240, 246
335637 288
335686 240
335695 488
335707 236
335719 ..... 218, 226, 236, 242
335743 362
335752 2
335759 ..... 262, 266
335760 ..... 262, 266
335779 ..... 262, 266
335784 ..... 262, 266
335785 ..... 262, 266
335810 ..... 262, 266
335864 262
335866 266
335867 ..... 262, 266
335869 ..... 254, 258
337043 ..... 412, 436
337143 ..... 302, 306, 410, 444, 454, 458, 466
337152 ..... 302, 306, 410, 444, 454, 458, 466
337163 426
337168 432
337173 426
337174 426
337175 426
337177 426
337178 426
337206 306
337311 ..... 412, 436
337941 376
337943 376
337980 ..... 386, 458
339588 332
347077 ..... 412, 436
347301 ..... 424, 466
347339 288
347487 288
347565 288
347569 ..... 412, 436
347691 292
347692 292
357233 444
357234 444

B

B4831 168
B4838 ..... 8, 10, 14, 18
B4839 ..... 8, 10, 14, 18
B4840 ..... 8, 10, 14, 18
B4841 ..... 8, 10, 14, 18
B4865 ..... 8, 10, 14, 18
B4963 134
B5010 ..... 14, 18, 200
B5011 ..... 14, 18, 200
B5012 ..... 14, 18, 200
B5013 ..... 14, 18, 200
B5084 178
B5085 178
B5114 ..... 8, 14, 18
B5224 190
B5407 162
B5605 180
B5609 176
B5615 134
B5655 82
B5656 82
B5657 88
B5674 88
B5747 152
B5825 212
B5826 212
B5937 82
B5938 88
B5940 82
B6042 486
B6043 486

B6044..... 486
B6045..... 486
B6046..... 486
B6057..... 480
B6137..... 272
B6138..... 272
B6145..... 188
B6154..... 158
B6158..... 180
B6179..... 198
B6191..... 450
B6192..... 450
B6193..... 448
B6194..... 448
B6195..... 452
B6203..... 294
B6211..... 476
B6212..... 164
B6213..... 486
B6255..... 280
B6256..... 280
B6257..... 280
B6258..... 280
B6264..... 278
B6265..... 278
B6266..... 278
B6267..... 278
B6344..... 88
B6345..... 88
B6347..... 88
B6376..... 156
B6400..... 474
B6401..... 182
B6410..... 254, 258, 262, 266
B6411..... 154
B6421..... 408
B6446..... 478
B6449..... 190
B6450..... 298
B6461..... 214
B6568..... 468
B6590..... 166
B6591..... 174
B6595..... 340
B6596..... 340
B6600..... 308
B6606..... 184
B6607..... 184
B6634..... 202
B6701..... 482
B6702..... 482
B6703..... 482
B6849..... 394
B6881..... 454
B6882..... 458
B6886..... 410
B6887..... 466
B6957..... 466
B6958..... 456
B6959..... 392
B6960..... 412
B6961..... 436
B6962..... 424
B6963..... 424
B6964..... 376
B6965..... 374
B6966..... 380
B7269..... 204
B7273..... 208
B7282..... 210
B7283..... 210
B7284..... 210
B7285..... 210
B7343..... 444
B7344..... 444
B7345..... 444
B9009..... 236
B9010..... 236
B9011..... 236
B9030..... 422
B9044..... 214
B9045..... 236
B9046..... 236
B9047..... 236
B9048..... 262
B9049..... 242
B9050..... 242
B9051..... 266
B9053..... 134

C

C1986..... 196
C2082..... 204
C2083..... 204
C2084..... 204
C2085..... 204

MacDon

CUSTOMERS
MacDon.com

DEALERS
Portal.MacDon.com

Trademarks of products are the marks of their respective manufacturers and/or distributors.

Printed in Canada