MacDon

C Series
Corn Header

Parts Manual - Export

1.371.421.GB

Translation of Original Instruction

The harvesting specialists.

TABLE OF CONTENTS

INPUT DRIVE..... 1
OUTER DRIVE → 2015..... 2
OUTER DRIVE (2016→)..... 2/A
OUTER DRIVE (2019→)..... 2/B
INPUT GEARBOX..... 3
GATHERING CHAIN ADJUSTER 4
SNAPPING UNIT GEARBOX (FLUTED ROLL) 5/A
FRAME ASSEMBLY - RIGID..... 6
FRAME ASSEMBLY- FOLDING..... 7
AUGER ASSEMBLY - RIGID..... 8
AUGER ASSEMBLY 4+2R, 4+2x2R, 5+2R, 5+2x2R..... 9
AUGER ASSEMBLY 6+2x3R..... 10
SNAPPING UNIT (FLUTED ROLL) 11/A
SNAPPING ROLL (FLUTED ROLL) 12
STALK CHOPPER..... 13/A
SNAPPING UNIT DRIVE - RIGID..... 14/A
SNAPPING UNIT DRIVE - RIGID..... 14/B
SNAPPING UNIT DRIVE - FOLDING..... 15/A
SNAPPING UNIT DRIVE - FOLDING 5+2R , 5+2x2R..... 15/B
SNAPPING UNIT DRIVE - EIGHT ROW FOLDING MODEL, GLEANER 15/C
DRIVE-SHIELDS - RIGID..... 16/A
DRIVE-SHIELDS - RIGID..... 16/B
DRIVE-SHIELDS - FOLDING..... 17/A
ELECTRIC & HYDRAULIC SNAPPING PLATE ADJUSTER..... ..... 18/A
SNAPPING PLATE ADJUSTING RODS..... 19/A
SIDE-SHIELDS …… 20
PLASTIC CENTRAL DIVIDERS - (20", 22") 2014.->..... 21/B
PLASTIC CENTRAL DIVIDERS - (30", 28", 32") 2011.->..... 21/A
PLASTIC CENTRAL DIVIDERS - (38"/ 96,5 CM)…..... 21/C
PLASTIC OUTER DIVIDERS..... 22/A
PLASTIC HINGED DIVIDERS - (30", 32",28")..... 23/A
PLASTIC HINGED DIVIDERS - 60 CM..... 23/B
HYDRAULIC FOLDING → 2015…… 24/A
HYDRAULIC FOLDING 2016 →…… 24/A1
HYDRAULIC FOLDING 2016 →…… 24/A2
HYDRAULIC FOLDING 2016 →…… 24/A3
HYDRAULIC FOLDING 2016 →…… 24/A4
HYDRAULIC RIGID…… 24/B
MOUNTING KIT: NEW HOLLAND (2010 -2015 FOLDING; 2011 -2015 FIXED)..... 25/A
MOUNTING KIT: NEW HOLLAND CNH CX, CR, TR, TX, TC, TF, CASE AFX (2016→)..... 25/B
MOUNTING KIT: LEXION..... 26
MOUNTING KIT: JD -> 2018..... 27
MOUNTING KIT: JD 2019-> 27/A
HYDRAULIC MULTI-COUPLER KITS : LEXION..... 28
HYDRAULIC MULTI-COUPLER KIT: JD 29/A
HYDRAULIC MULTI-COUPLER KIT: AGCO 29/B
HYDRAULIC MULTI-COUPLER KIT: IDEAL 29/C
DECALS - WARNING..... 31
PLASTIC CENTRAL DIVIDERS - (70cm~28")..... 33
PLASTIC HINGED DIVIDERS - (70cm~28")..... 34
MOUNTING KIT: CASE IH 1600 & 2000 SERIES …… 35
MOUNTING KIT: CD, Mega, Medion..... 36
MOUNTING KIT: MF 8680, Gleaner C, 8780, 9690, 9790..... 37
MOUNTING KIT: MF 32-40..... 38
MOUNTING KIT: MF 8570..... 39
MOUNTING KIT: DON 1500B..... 40
MOUNTING KIT: DON 1500M, ACROS..... 41
AUTOMATIC HEADER HEIGHT CONTROL (AHHC)..... 42
STUBBLE STOMPER ->2017..... 43/A
STUBBLE STOMPER 2018->..... 43/B
SUNFLOWER KIT..... 44
TALL AND DIVIDER (TED)..... 45
MOUNTING KIT: FIAT LAVERDA..... 46
SNAPPING KNIFE ROLL…… 47

SNAPPING UNIT GEARBOX FOR KNIFE ROLLS..... 48
SNAPPING UNIT WITH KNIFE ROLLS..... 49
MOUNTING KIT: TORUM-740..... 50
MOUNTING KIT: GLEANER-"R/S"..... 51
MOUNTING KIT: VECTOP..... 52
SNAPINNG PLATE INDICATOR..... 54
ROTARY END DIVIDER (RED)..... 55
ROTARY END DIVIDER (RED) HYDRAULIC -> 2015 56
ROTARY END DIVIDER (RED) HYDRAULIC 2016-> 56/A
SAVER NET..... 57
HYDRAULIC MULTI-COUPLER KIT: NH 2002→..... 58/A
HYDRAULIC KIT: NH → 2001 (TORUM, ACROS, VECTOR, DON, MF 32-40, MF 7274/7278 CEREA)..... 58/B
HYDRAULIC KIT: IHC 59
HYDRAULIC KIT: CD, MEGA, KZSZ-7, KZSZ-10K, KZSZ-1218 60
HYDRAULIC KIT: JD 2000, 2017 → 61/A
LIGHTING..... 62
HYDRAULIC MULTI-COUPLING KIT: DEUTZ FAHR 63
MOUNTING KIT: DEUTZ FAHR ->2017..... 64
SHIPPING ACCESSORIES..... 65
MOUNTING KIT: POLESYE, K3C-7, 1218, GS 12; K3C 10K; SKIF 290-330..... 66
MOUNTING KIT: DEUTZ FAHR 2018->..... 67
MOUNTING KIT: LIDA 1300..... 68
EXTENSION DRIVE 4+2R/70 CM & 5+2R/60 CM 69
EXTENSION DRIVE 4+2X2R/70 CM & 5+2X2R/60 CM 70
MOUNTING KIT: IDEAL 71

TORQUE VALUES FOR FASTENERS

TABLE OF CONTENTS
(in alphabetical order)

AUGER ASSEMBLY - RIGID..... 8
AUGER ASSEMBLY 4+2R, 4+2x2R, 5+2R, 5+2x2R..... 9
AUGER ASSEMBLY 6+2x3R..... 10
AUTOMATIC HEADER HEIGHT CONTROL (AHHC)..... 42
DECALS - WARNING..... 31
DRIVE-SHIELDS - FOLDING..... 17/A
DRIVE-SHIELDS - RIGID..... 16/A
DRIVE-SHIELDS - RIGID..... 16/B
ELECTRIC & HYDRAULIC SNAPPING PLATE ADJUSTER..... ..... 18/A
EXTENSION DRIVE 4+2R/70 CM & 5+2R/60 CM ……. 69
EXTENSION DRIVE 4+2X2R/70 CM & 5+2X2R/60 CM ……. 70
FRAME ASSEMBLY - RIGID..... 6
FRAME ASSEMBLY- FOLDING..... 7
GATHERING CHAIN ADJUSTER 4
HYDRAULIC FOLDING → 2015…… 24/A
HYDRAULIC FOLDING 2016 →…… 24/A1
HYDRAULIC FOLDING 2016 →…… 24/A2
HYDRAULIC FOLDING 2016 →…… 24/A3
HYDRAULIC FOLDING 2016 →…… 24/A4
HYDRAULIC KIT: CD, MEGA, KZSZ-7, KZSZ-10K, KZSZ-1218 ……60
HYDRAULIC MULTI-COUPLER KIT: DEUTZ FAHR 63
HYDRAULIC MULTI-COUPLER KIT: NH 2002→……58/A
HYDRAULIC KIT: IHC …… 59
HYDRAULIC KIT: JD 2000, 2017 → ……. 61/A
HYDRAULIC KIT: NH → 2001 (TORUM, ACROS, VECTOR, DON, MF 32-40,MF 7274/7278 CEREA)…… 58/B
HYDRAULIC RIGID…… 24/B
INPUT DRIVE..... 1
INPUT GEARBOX..... 3
LEXION MULTI-COUPLER KITS..... 28
LIGHTING …… 62
MOUNTING KIT: CASE IH 1600 &2000 SERIES..... 35
MOUNTING KIT: CD, Mega, Medion..... 36
MOUNTING KIT: DEUTZ FAHR -> 2017..... 64
MOUNTING KIT: DEUTZ FAHR 2018->……. 67
MOUNTING KIT: DON 1500B..... 40
MOUNTING KIT: DON 1500M, ACROS..... 41
MOUNTING KIT: FIAT LAVERDA..... 46
MOUNTING KIT: GLEANER "R/S"…… 51
MOUNTING KIT: IDEAL…… 71
MOUNTING KIT: JD -> 2018 27
MOUNTING KIT: JD 2019->..... 27/A
MOUNTING KIT: LEXION..... 26
MOUNTING KIT: LIDA 1300……..... 68
MOUNTING KIT: MF 32-40..... 38
MOUNTING KIT: MF 8570..... 39
MOUNTING KIT: MF 8680, Gleaner C, 8780, 9690, 9790..... 37
MOUNTING KIT: NEW HOLLAND (2010 -2015 FOLDING; 2011 -2015 FIXED)..... 25/A
MOUNTING KIT: NEW HOLLAND CNH CX, CR, TR, TX, TC, TF, CASE AFX (2016→)..... 25/B
MOUNTING KIT: POLESYE, K3C-7, 1218, GS 12; K3C 10K; SKIF 290-330..... 66
MOUNTING KIT: TORUM - 740…… 50
MOUNTING KIT: VECTOP…… 52
MULTI-COUPLER KIT: AGCO 29/B
MULTI-COUPLER KIT: IDEAL 29/C
MULTI-COUPLER KIT: JD 29/A
OUTER DRIVE → 2015..... 2
OUTER DRIVE (2016→)..... 2/A
OUTER DRIVE (2019→)..... 2/B
PLASTIC CENTRAL DIVIDERS - (20", 22") 2014.->..... 21/B
PLASTIC CENTRAL DIVIDERS - (30", 28", 32") 2011. ->..... 21/A
PLASTIC CENTRAL DIVIDERS - (38"/ 96,5 CM) 21/C
PLASTIC CENTRAL DIVIDERS - (70cm~28")..... 33
PLASTIC HINGED DIVIDERS - (28",30", 32")..... 23/A
PLASTIC HINGED DIVIDERS - (60 CM)..... 23/B
PLASTIC HINGED DIVIDERS - (70cm~28")..... 34

PLASTIC OUTER DIVIDERS..... 22/A
ROTARY END DIVIDER (RED)..... 55
ROTARY END DIVIDER (RED) HYDRAULIC -> 2015 56
ROTARY END DIVIDER (RED) HYDRAULIC 2016-> 56/A
SAVER NET 57
SHIPPING ACCESSORIES..... 65
SIDE-SHIELDS 20
SNAPPING KNIFE ROLL..... 47
SNAPPING PLATE ADJUSTING RODS..... 19/A
SNAPPING PLATE IDICATOR..... 54
SNAPPING ROLL (FLUTED ROLL) 12
SNAPPING UNIT DRIVE - FOLDING..... 15/A
SNAPPING UNIT DRIVE - FOLDING 5+2R , 5+2x2R..... 15/B
SNAPPING UNIT DRIVE - EIGHT ROW FOLDING MODEL, GLEANER..... 15/C
SNAPPING UNIT DRIVE - RIGID..... 14/A
SNAPPING UNIT DRIVE - RIGID..... 14/B
SNAPPING UNIT GEARBOX (FLUTED ROLL) 5/A
SNAPPING UNIT GEARBOX FOR KNIFE ROLLS..... 48
SNAPPING UNIT (FLUTED ROLL) 11/A
SNAPPING UNIT WITH KNIFE ROLLS..... 49
STALK CHOPPER..... 13/A
SUNFLOWER KIT..... 44
STUBBLE STOMPER ->2017 ..... 43/A
STUBBLE STOMPER 2018->..... 43/B
TALL AND DIVIDER (TED)..... 45

TORQUE VALUES FOR FASTENERS

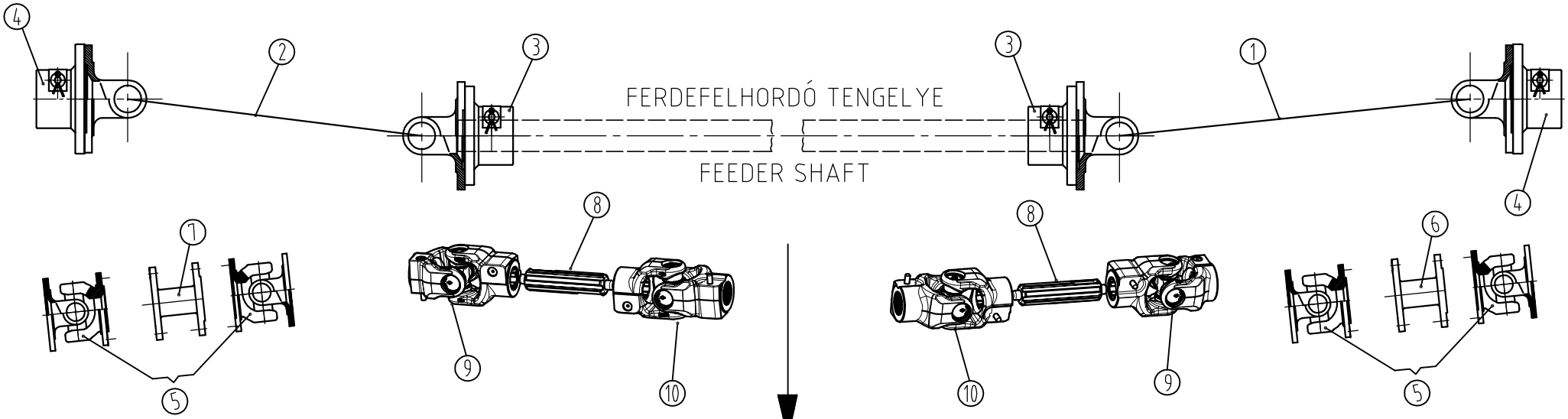

Kombájn típus Type of combine	1/min RPM
Agco,MF8780,9690, 9790 fixed	617
Agco, Gleaner R, C, MF8680,9690,9790, variable	608-975
Case-IH 1400-2300 series	500
Case AFX variable	460-690
Claas, Cat Lexion fixed	761
Claas, Cat Lexion variable	508-737
JD fixed	520

Kombájn típus Type of combine	1/min RPM
JD variable	520-785
MF 8570 fixed	475
NH CR variable	402-575
NH TR variable	465-593
NH CS, CSX, CX TX 2003->TC 2003->	585
NH TC-TX->2002, TF76	433
NH TX 32-36, TF 42-46	500
FIAT	553
FAHR	475
MF32-40	375
MF7270	617
Don, Vector, Acros Torum	520

2017

INPUT DRIVE

Type of header	Ref.	Description	CLAAS LEXION 440-460, 480, 540-560, 580,600,640-670,770,780 760 ->2011 TUCANO 340, 440-450,470,480	CLAAS LEXION 405-430, 470, 510-530, 570 620,630,740,750, 760 2012-> TUCANO 320-330, 430	CLAAS MEGA, CD, MEDION	NH CX, CS, CSX, CR970-980, Case AFX	NEW H. CX, CS, CSX, CR970-980 Case AFX 7020, 8020 2017-től	NH CR 920-940-960 Case AFX 5088-6088-7088 TC 5070	NH CR 920-940-960 Case AFX 5088-6088-7088 TC 5070 2017-től	NH TX	CASE IH (IHC) 1000-2000	JD 2050, 2250,2350,WTS 9500, STS, C, S, W 540-550, T 550-560	JD 2060, 2260,2366LTWTS 9600, CTS, W 640-660, T 660-670	MF 8780, 9000	MF 32-40, 7274-78 (CEREA '05)	MF 7274-78 (2006->) ACTIVA, BETA, CHALLEN-GER	DON 1500M TORUM 740	DON 1500B	VECTOR 1200M, VECTOR 420	Gleaner R/S/N	Fiat Laverda	Fahr	K3C-7, POLESYE 1218, GS14	LIDA 1300	IDEAL
6R-70cm	1	PTO drive shaft - LH	1.373.693	1.373.693	1.373.699	1.373.699	1.373.693	1.373.699	1.373.693	1.373.699	1.373.703	1.373.692	1.373.692	1.373.690	1.373.699	1.373.690	-	-	1.373.708	-	1.373.697	1.372.596	-	-	-
	2	PTO drive shaft - RH	1.373.693	1.373.693	1.373.699	1.373.699	1.373.693	1.373.699	1.373.693	1.373.699	1.373.703	1.373.692	1.373.692	1.373.690	1.373.699	1.373.690	-	-	1.373.708	-	1.373.697	1.372.596	-	-	-
6R-76,2cm 8R-50cm 8R-56cm	1	PTO drive shaft - LH	1.373.693	1.373.693	1.373.699	1.373.699	1.373.693	1.373.699	1.373.693	1.373.699	1.373.703	1.373.692	1.373.692	1.373.692	1.373.699	1.373.692	1.373.707	-	1.373.708	1.373.694	1.373.697	1.372.596	-	-	1.372.602
	2	PTO drive shaft - RH	1.373.693	1.373.693	1.373.699	1.373.699	1.373.693	1.373.699	1.373.693	1.373.699	1.373.703	1.373.692	1.373.692	1.373.692	1.373.699	1.373.692	1.373.707	-	1.373.708	1.373.692	1.373.697	1.372.596	-	-	1.372.602
8R-70cm	1	PTO drive shaft - LH	1.373.694	1.373.694	1.373.700	1.373.700	1.373.694	1.373.700	1.373.694	-	1.373.704	1.373.694	1.373.694	1.373.694	-	-	1.373.709	1.373.700	1.373.709	-	1.373.700	1.373.700	1.373.700	-	-
	2	PTO drive shaft - RH	1.373.694	1.373.694	1.373.700	1.373.700	1.373.694	1.373.700	1.373.694	-	1.373.704	1.373.694	1.373.694	1.373.694	-	-	1.373.709	1.373.700	1.373.709	-	1.373.700	1.373.700	1.373.700	-	-
8R-76,2-96,5cm	1	PTO drive shaft - LH	1.373.694	1.373.694	1.373.700	1.373.700	1.373.694	1.373.700	1.373.694	-	1.373.704	1.373.694	1.373.694	1.373.694	-	1.373.694	-	-	1.373.709	1.373.695	1.373.700	1.373.700	-	-	1.372.605
	2	PTO drive shaft - RH	1.373.694	1.373.694	1.373.700	1.373.700	1.373.694	1.373.700	1.373.694	-	1.373.704	1.373.694	1.373.694	1.373.694	-	1.373.694	-	-	1.373.709	1.373.694	1.373.700	1.373.700	-	-	1.372.605
12R 50- 70-76,2 cm 16R 76,2	1	PTO drive shaft - LH	1.373.694	1.373.694	1.373.700	1.373.700	1.373.694	1.373.700	1.373.694	-	1.373.704	1.373.694	1.373.694	1.373.694	-	1.373.694	1.373.709	-	-	-	-	-	-	-	1.372.605
	2	PTO drive shaft - RH	1.373.694	1.373.694	1.373.700	1.373.700	1.373.694	1.373.700	1.373.694	-	1.373.704	1.373.694	1.373.694	1.373.694	-	1.373.694	1.373.709	-	-	-	-	-	-	-	1.372.605
4+2R, 4+2x2R 76,2 cm interior drive	1	PTO drive shaft - LH	1.355.695	1.355.701	1.355.697	1.355.695	1.355.695	1.355.706	1.355.701	1.355.702	1.355.707	1.372.652	-	1.319.154	1.355.690	1.355.693	-	-	-	-	1.355.693	-	-	1.355.706	1.372.878
	1*	PTO drive shaft - LH	-	-	-	-	-	-	-	-	-	1.372.280	-	-	-	-	-	-	-	-	-	-	-	-	-
	2	PTO drive shaft - RH	1.355.698	1.355.709	1.355.702	1.355.695	1.355.695	1.355.706	1.355.701	1.355.693	1.355.707	1.372.652	-	1.319.154	1.355.690	1.355.698	-	-	-	-	1.355.702	-	-	1.372.017	1.372.879
	2*	PTO drive shaft - RH	-	-	-	-	-	-	-	-	-	1.372.280	-	-	-	-	-	-	-	-	-	-	-	-	-
	3	Hub assy	1.375.417	-	-	1.375.415	1.375.417	-	-	-	-	-	-	1.375.417	1.375.415	1.375.417	-	-	-	-	1.375.415	-	-	-	-
	4	Hub assy	-	-	-	-	-	-	-	1.375.415	-	-	-	1.375.415	1.375.415	-	-	-	-	-	-	-	-	-	-
	5	Double joint coupling	-	-	-	-	-	-	-	-	-	-	-	-	-	-	-	-	-	-	-	-	-	-	-
	6	Spacer-LH	-	-	-	-	-	-	-	-	-	-	-	-	-	-	-	-	-	-	-	-	-	-	-
	7	Spacer -RH	-	-	-	-	-	-	-	-	-	-	-	-	-	-	-	-	-	-	-	-	-	-	-
	8	Shaft	-	-	-	-	-	-	-	-	-	-	1.372.650	-	-	-	-	-	-	-	-	-	-	-	-
	9	Yoke - 21spline	-	-	-	-	-	-	-	-	-	-	1.372.648	-	-	-	-	-	-	-	-	-	-	-	-
	10	Yoke - 6 spline	-	-	-	-	-	-	-	-	-	-	1.372.649	-	-	-	-	-	-	-	-	-	-	-	-
	8*	Shaft	-	-	-	-	-	-	-	-	-	-	1.372.276	-	-	-	-	-	-	-	-	-	-	-	-
	9*	Yoke - 21spline	-	-	-	-	-	-	-	-	-	-	1.372.362	-	-	-	-	-	-	-	-	-	-	-	-
	10*	Yoke - 6 spline	-	-	-	-	-	-	-	-	-	-	1.372.361	-	-	-	-	-	-	-	-	-	-	-	-
4+2R, 4+2x2R 70cm interior drive	1	PTO drive shaft - LH	-	1.372.280	1.319.154	-	-	1.372.284	1.372.280	-	-	1.372.280	-	-	-	-	-	-	-	-	-	-	-	-	-
	2	PTO drive shaft - RH	1.319.154	1.355.698	1.315.983	-	-	1.372.284	1.372.280	-	-	1.372.280	-	-	-	-	-	-	-	-	-	-	-	-	-
	3	Hub assy	1.375.417	-	1.375.415	-	-	-	-	-	-	-	-	-	-	-	-	-	-	-	-	-	-	-	-
	4	Hub assy	1.375.415	-	1.375.415	-	-	-	-	-	-	-	-	-	-	-	-	-	-	-	-	-	-	-	-
	5	Double joint coupling	1.313.536	-	-	-	-	-	-	-	-	-	-	-	-	-	-	-	-	-	-	-	-	-	-
	6	Spacer	1.327.903	-	-	-	-	-	-	-	-	-	-	-	-	-	-	-	-	-	-	-	-	-	-
	8*	Shaft	-	-	-	-	-	-	-	-	-	-	1.372.276	-	-	-	-	-	-	-	-	-	-	-	-
	9*	Yoke - 21spline	-	-	-	-	-	-	-	-	-	-	1.372.362	-	-	-	-	-	-	-	-	-	-	-	-
	10*	Yoke - 6 spline	-	-	-	-	-	-	-	-	-	-	1.372.361	-	-	-	-	-	-	-	-	-	-	-	-
4+2R 70-76,2 cm exterior drive	1	PTO drive shaft - LH	1.373.693	-	1.373.699	1.373.699	1.373.693	1.373.699	1.373.693	1.373.699	1.373.703	1.373.692	1.373.692	1.373.692	1.373.699	1.373.692	-	-	1.373.708	1.373.694	1.373.697	1.372.596	-	-	1.372.602
	2	PTO drive shaft - RH	1.373.693	-	1.373.699	1.373.699	1.373.693	1.373.699	1.373.693	1.373.699	1.373.703	1.373.692	1.373.692	1.373.692	1.373.699	1.373.692	-	-	1.373.708	1.373.692	1.373.697	1.372.596	-	-	1.372.602
4+2x2R 76,2 cm exterior drive	1	PTO drive shaft - LH	1.373.694	1.373.694	-	1.373.700	1.373.694	1.373.700	1.373.694	1.373.700	1.373.704	1.373.694	1.373.694	1.373.694	-	1.373.694	-	-	1.373.709	1.373.695	1.373.700	1.373.700	-	-	1.372.605
	2	PTO drive shaft - RH	1.373.694	1.373.694	-	1.373.700	1.373.694	1.373.700	1.373.694	1.373.700	1.373.704	1.373.694	1.373.694	1.373.694	-	1.373.694	-	-	1.373.709	1.373.694	1.373.700	1.373.700	-	-	1.372.605
4+2x2R 80 cm interior drive	1	PTO drive shaft - LH	1.355.701	1.355.709	1.355.706	1.355.702	1.355.701	1.372.017	1.355.709	1.355.702	1.373.702	1.372.016	1.319.154	1.355.693	-	-	-	-	-	-	-	-	-	-	-
	2	PTO drive shaft - RH	1.355.701	1.355.709	1.372.017	1.355.702	1.355.701	1.372.017	1.355.709	1.355.702	1.373.702	1.355.701	1.315.983	1.355.693	-	-	-	-	-	-	-	-	-	-	-
	3	Hub assy	-	-	-	-	-	-	-	-	-	-	1.375.417	1.375.417	-	-	-	-	-	-	-	-	-	-	-
	4	Hub assy	-	-	-	-	-	-	-	-	-	-	1.375.415	-	-	-	-	-	-	-	-	-	-	-	-
4+2R 80 cm exterior drive	1	PTO drive shaft - LH	-	-	-	-	-	-	-	-	-	-	-	-	-	-	-	-	-	-	-	1.373.699	-	-	-
	2	PTO drive shaft - RH	-	-	-	-	-	-	-	-	-	-	-	-	-	-	-	-	-	-	-	1.373.699	-	-	-
5+2, 5+2x2 R 60cm interior drive	1	PTO drive shaft - LH	1.355.698	-	-	1.319.154	1.319.154	-	-	-	-	-	-	-	-	-	-	-	-	-	-	-	-	-	-
	2	PTO drive shaft - RH	1.355.701	-	-	1.319.154	1.319.154	-	-	-	-	-	-	-	-	-	-	-	-	-	-	-	-	-	-
	3	Hub assy	-	-	-	1.375.415	1.375.417	-	-	-	-	-	-	-	-	-	-	-	-	-	-	-	-	-	-
	4	Hub assy	-	-	-	1.375.415	1.375.415	-	-	-	-	-	-	-	-	-	-	-	-	-	-	-	-	-	-
5+2x2 R 76,2 cm interior drive	1	PTO drive shaft - LH	-	-	-	1.373.697	1.373.691	-	-	-	-	1.373.691	1.373.691	-	-	-	-	-	-	-	-	-	-	-	-
	2	PTO drive shaft - RH	-	-	-	1.373.697	1.373.691	-	-	-	-	1.373.691	1.373.691	-	-	-	-	-	-	-	-	-	-	-	-
6+2x3R 70 cm interior drive	1	PTO drive shaft - LH	-	-	-	-	-	-	-	-	-	-	-	-	-	-	-	-	-	-	-	-	-	-	1.372.602
	2	PTO drive shaft - RH	-	-	-	-	-	-	-	-	-	-	-	-	-	-	-	-	-	-	-	-	-	-	1.372.602
6+2x3R 76,2 cm interior drive	1	PTO drive shaft - LH	1.373.693	1.373.693	-	1.373.699	1.373.693	1.373.699	1.373.693	-	1.373.703	1.373.692	1.373.692	1.373.692	-	-	-	-	-	1.373.694	-	-	-	-	1.372.603
	2	PTO drive shaft - RH	1.373.693	1.373.693	-	1.373.699	1.373.693	1.373.699	1.373.693	-	1.373.703	1.373.692	1.373.692	1.373.692	-	-	-	-	-	1.373.692	-	-	-	-	1.372.603
12R -56 cm	1	PTO drive shaft - LH	1.373.693	1.373.693	-	1.373.699	1.373.693	1.373.699	1.373.693	-	1.373.703	1.373.692	1.373.692	1.373.692	-	1.373.692	-	-	-	1.373.694	-	-	-	-	1.372.602
	2	PTO drive shaft - RH	1.373.693	1.373.693	-	1.373.699	1.373.693	1.373.699	1.373.693	-	1.373.703	1.373.692	1.373.692	1.373.692	-	1.373.692	-	-	-	1.373.692	-	-	-	-	1.372.603

Note:*For Corn Heads mounted to JD combines (except Hill Master) with lateral tilt function only.

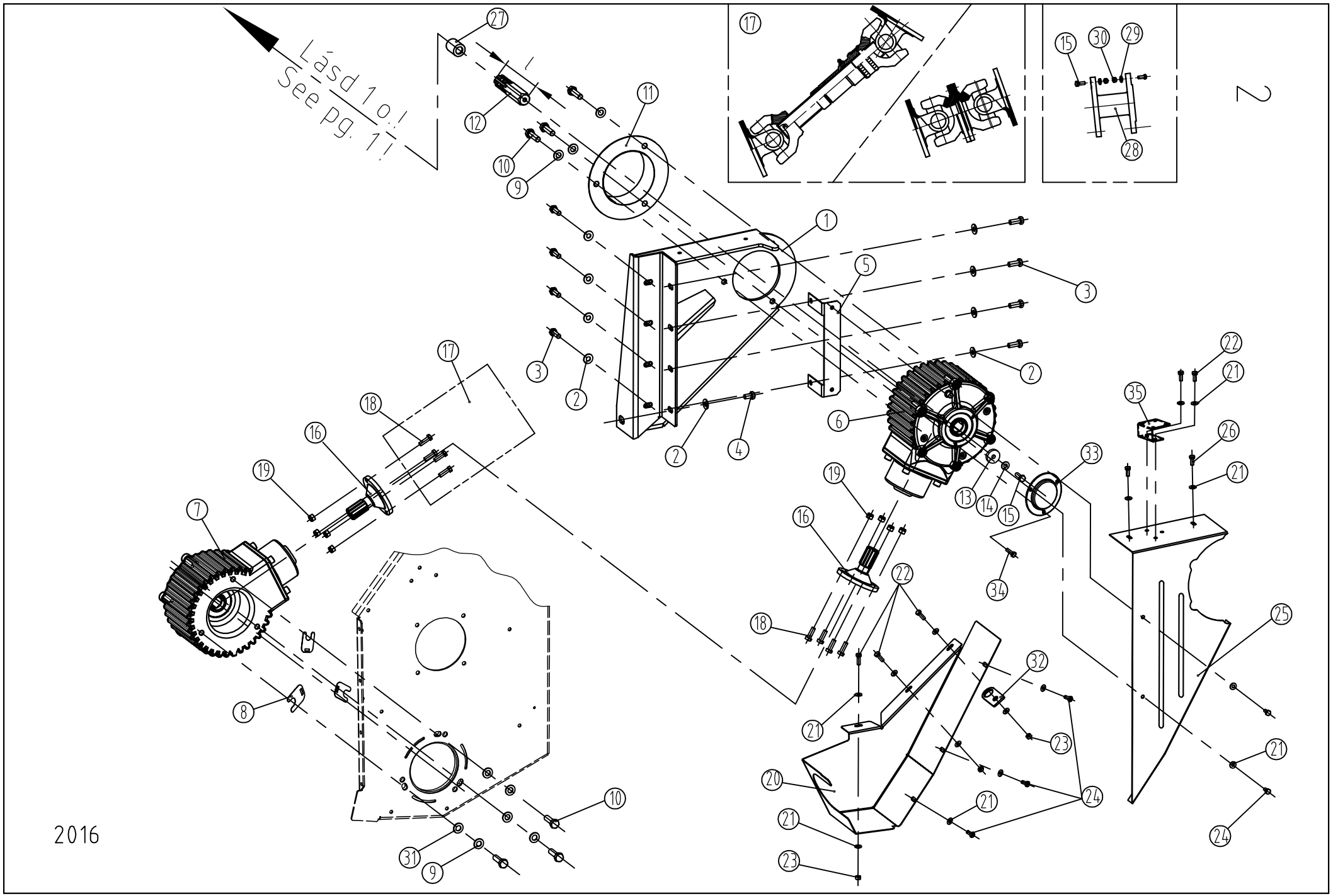
Lásd 10./
See pg. 11
2016
2

DRIVE → 2015

Ref.	Part Number	Description		CLAAS	JD, Case IH, MF 8780-9000 DON1500, Vector,PCM, Torum-740	MF 8570	MF 32-42	NH, AFX	Fiat Laverda	NH-TX
1.	1.378.128	Console - LH	2010→	1	-	-	1	-	-	-
1.	1.378.129	Console - RH	2010→	1	-	-	1	-	-	-
1.	1.378.136	Console - LH	2010→	-	-	-	-	1	-	1
1.	1.378.137	Console - RH	2010→	-	-	-	-	1	-	1
1.	1.378.144	Console - LH	2010→	-	-	-	-	-	1	-
1.	1.378.145	Console - RH	2010→	-	-	-	-	-	1	-
1.	1.378.140	Console - LH	2010→	-	1	1	-	-	-	-
1.	1.378.141	Console - RH	2010→	-	1	1	-	-	-	-
2.	91623938961	Spring washer - A12		18	18	18	18	18	18	18
3.	79412003066	Hex bolt M12x30 - DIN933/8.8		16	16	16	16	16	16	16
4.	79412002066	Hex bolt M12x20 - DIN933/8.8		2	2	2	2	2	2	2
5.	1.376.446	Angle		2	2	2	2	2	2	2
6.	1.376.070	Input gearbox		-	2	-	2	2	2	2
6.	1.376.068	Input gearbox		2	-	-	-	-	-	-
6.	1.376.069	Input gearbox		-	-	2	-	-	-	-
7.	1.376.069	Output gearbox		2	2	-	-	2	2	-
7.	1.376.068	Output gearbox		-	-	2	2	-	-	2
8.	1.376.752	Shim		10	10	10	10	10	10	10
9.	91623939061	Spring washer - A14		12	12	12	12	12	12	12
10.	79414004566	Hex bolt M14x45 - DIN933/8.8		12	12	12	12	12	12	12
11.	1.376.436	Safety tube		2	2	2	2	2	2	2
12.	1.375.973	Input shaft (l=155)		2	2	2	2	2	2	2
12.	1.377.105	Input shaft (l=205) **(see note below!)**	2008→	2	2	2	2	2	2	2
13.	1.376.444	Washer		2	2	2	2	2	2	2
14.	91623938861	Spring washer- A10		2	2	2	2	2	2	2
15.	79410003066	Hex bolt M10X30 DIN933/8.8		18	22	22	18	28	18	28
16.	1.375.974	Shaft		4	4	4	4	4	4	4
17.	1.313.536	Double joint coupling		-	2	2	-	2	-	2
17.	1.355.710	PTO drive shaft	2008→	2	-	-	2	-	-	-
17.	1.356.529	PTO drive shaft		-	-	-	-	-	2	-
18.	1.376.445	Hex bolt - M10x30		-	4	4	-	8	-	8
19.	70710000066	M10 DIN980/8.8 Hex nut		16	24	20	16	34	16	34
20.	1.378.150	Shield - LH	2010→	1	-	-	1	-	-	-
20.	1.378.151	Shield - RH	2010→	1	-	-	1	-	-	-
20.	1.378.166	Shield - LH	2010→	-	-	-	-	1	-	1
20.	1.378.167	Shield - RH	2010→	-	-	-	-	1	-	1
20.	1.378.170	Shield - LH	2010→	-	-	-	-	-	1	-
20.	1.378.171	Shield - RH	2010→	-	-	-	-	-	1	-
20.	1.378.156	Shield - LH	2010→	-	1	1	-	-	-	-
20.	1.378.157	Shield - RH	2010→	-	1	1	-	-	-	-
20.	1.379.396	Shield - LH	2014→ 12R50cm	1	-	-	1	-	-	-
20.	1.379.397	Shield - RH	2014→ 12R50cm	1	-	-	1	-	-	-
20.	1.379.392	Shield - LH	2014→ 8R50-56cm;12R50cm	-	1	1	-	-	-	-
20.	1.379.391	Shield - RH	2014→ 8R50-56cm;12R50cm	-	1	1	-	-	-	-
20.	1.379.061	Shield - LH	2014→ 12R56cm;16R76,2cm	1	-	-	1	-	-	-
20.	1.379.062	Shield - RH	2014→ 12R56cm;16R76,2cm	1	-	-	1	-	-	-
20.	1.378.985	Shield - LH	2014→ 12R56cm;16R76,2cm	-	1	1	-	-	-	-
20.	1.378.997	Shield - RH	2014→ 12R56cm;16R76,2cm	-	1	1	-	-	-	-
21.	91623938761	Spring washer - A8		26	22	22	26	24	28	24
22.	79408002566	Hex bolt M8x25 - DIN933/8.8		6	4	4	6	6	6	6
23.	73508000066	Hex nut M8 - DIN934		6	4	4	6	4	6	4
24.	79408001666	Hex bolt M8x16 - DIN933/8.8		10	8	8	10	8	8	8
25.	1.378.148	Shield - LH	2010→	1	-	-	1	-	-	-
25.	1.378.149	Shield - RH	2010→	1	-	-	1	-	-	-
25.	1.378.164	Shield - LH	2010→	-	-	-	-	1	-	1
25.	1.378.165	Shield - RH	2010→	-	-	-	-	1	-	1
25.	1.378.168	Shield - LH	2010→	-	-	-	-		1	-
25.	1.378.169	Shield - RH	2010→	-	-	-	-	-	1	-
25.	1.378.154	Shield - LH	2010→	-	1	1	-	-	-	-
25.	1.378.155	Shield - RH	2010→	-	1	1	-	-	-	-
25.	1.379.063	Shield - LH	2014→ 12R56cm;16R76,2cm	1	-	-	1	-	-	-
25.	1.379.064	Shield - RH	2014→ 12R56cm;16R76,2cm	1	-	-	1	-	-	-
25.	1.378.987	Shield - LH	2014→ 12R56cm;16R76,2cm	-	1	1	-	-	-	-
25.	1.378.999	Shield - RH	2014→ 12R56cm;16R76,2cm	-	1	1	-	-	-	-
26.	79408002066	Hex bolt M8x20 - DIN933/8.8		4	6	6	4	6	4	6
27.	1.377.106	Spacer **(see note below!)**	2008→	-	2	2	-	2	-	2
28.	1.319.873	Distance piece	2010 - 2015.	-	-	-	-	2	-	2
29.	72210000060	Spring washer M10 - DIN128/A	2010→	-	-	-	-	16	-	16
30.	73510000066	Hex nut M10 - DIN934	2010→	-	-	-	-	16	-	16
31.	1.378.760	Washer	2012→	6	6	6	6	6	6	6
32.	1.379.146	Loop	2013→	2	2	2	2	2	2	2
33.	1.379.634	Cover	2014→	2	2	2	2	2	2	2
33.	1.372.314	Cover	2016→	2	2	2	2	2	2	2
34.	79406001066	Hex bolt M6x10 - DIN933/8.8	2014→	6	6	6	6	6	6	6
35.	1.372.315	Holder	2016→	-	-	-	-	1	-	1

Note: Quantities are not depend on the type of corn head.
Application of item 8 is depends on the backlash of the gears.
For item 12 & 27: 1.377.105 and 1.377.106 in case of folding machines with exterior drive only.
For item 31: for fix and folding machines with exterior drive only.
For item 35: for 70 cm folding machines only.

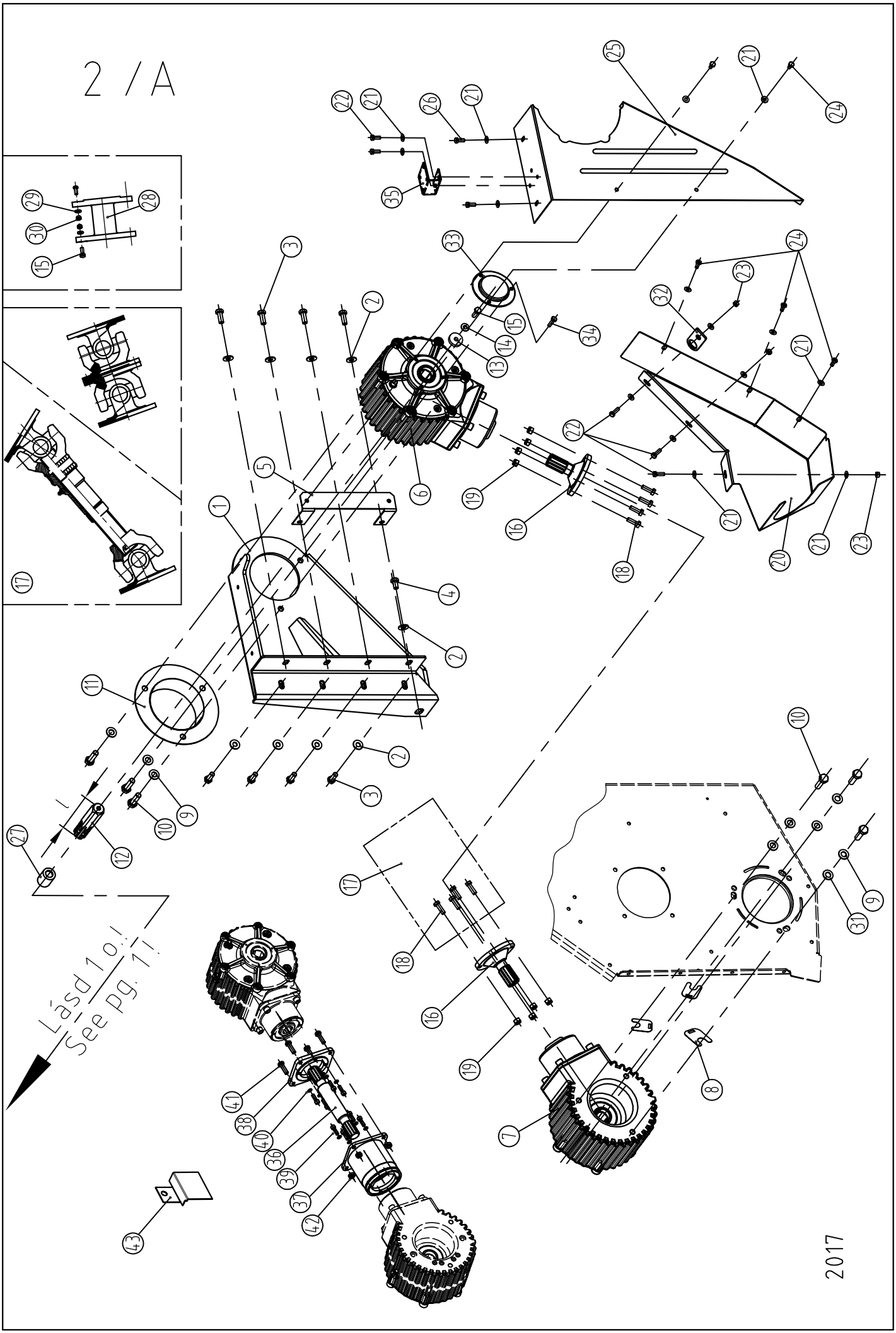
2 / A
Lásd 10.!
See pg. 11.
2017

DRIVE (2016 →)

Ref.	Part Number	Description		CLAAS	JD direct, Case 1000-2000, AGCO direct DON1500, Vector,PCM, Torum-740	AGCO variátor	JD variátor	MF 8570	MF 32-42	Fiat Laverda	CNH	CNH 4+2; 4+2x2R	NH TX	JD 2060, 2260 INT	FAHR
1.	1.378.128	Console - LH		1	-	-	-	-	1	-	-	-	-	-	1
1.	1.378.129	Console - RH		1	-	-	-	-	1	-	-	-	-	-	1
1.	1.378.144	Console - LH		-	-	-	-	-	-	1	-	-	-	-	-
1.	1.378.145	Console - RH		-	-	-	-	-	-	1	-	-	-	-	-
1.	1.378.140	Console - LH		-	1	1	1	1	-	-	1	-	-	-	-
1.	1.378.141	Console - RH		-	1	1	1	1	-	-	1	-	-	-	-
1.	1.372.245	Console - LH		-	-	-	-	-	-	-	-	1	1	-	-
1.	1.372.246	Console - RH		-	-	-	-	-	-	-	-	1	1	-	-
1.	1.373.675	Console - LH		-	-	-	-	-	-	-	-	-	-	1	-
1.	1.373.676	Console - RH		-	-	-	-	-	-	-	-	-	-	1	-
2.	91623938961	Spring washer - A12		16	16	16	16	16	16	16	16	16	16	6	16
3.	79412003066	Hex bolt M12x30 - DIN933/8.8		16	16	16	16	16	16	16	16	16	16	6	16
4.	79412002066	Hex bolt M12x20 - DIN933/8.8		2	2	2	2	2	2	2	2	2	2	-	2
5.	1.376.446	Angle	→2015	2	2	2	2	2	2	2	2	2	2	-	2
6.	1.376.070	Input gearbox 27/11		-	2	-	-	-	-	2	-	-	-	-	-
6.	1.376.068	Input gearbox 27/15		2	-	-	2	-	-	-	-	-	-	-	-
6.	1.376.069	Input gearbox 27/12		-	-	-	-	2	2	-	2	2	2	-	2
6.	1.373.898	Input gearbox 27/18		-	-	2	-	-	-	-	-	-	-	-	-
6.	1.372.444	Input gearbox 27/11		-	-	-	-	-	-	-	-	-	-	2	-
7.	1.376.069	Output gearbox 27/12		2	2	2	2	-	-	2	2	2	-	-	-
7.	1.376.068	Output gearbox 27/15		-	-	-	-	2	-	-	-	-	-	-	2
7.	1.373.898	Output gearbox 27/18		-	-	-	-	-	2	-	-	-	2	-	-
7.	1.372.443	Output gearbox 27/12		-	-	-	-	-	-	-	-	-	-	2	-
8.	1.376.752	Shim		10	10	10	10	10	10	10	10	10	10	10	10
9.	91623939061	Spring washer - A14		12	12	12	12	12	12	12	12	12	12	12	12
10.	79414004566	Hex bolt M14x45 - DIN933/8.8		12	12	12	12	12	12	12	12	12	12	12	12
11.	1.376.436	Safety tube		2	2	2	2	2	2	2	2	2	2	2	2
12.	1.375.973	Input shaft (l=155)		2	2	2	2	2	2	2	2	2	2	2	2
12.	1.377.105	Input shaft (l=205) **(see note below!)**		2	2	2	2	2	2	2	2	2	2	2	2
12.*	1.372.371	Imput shaft (l=139,5) **(see note below!)**		-	2	-	2	-	-	-	-	-	-	-	-
13.	1.376.444	Washer		2	2	2	2	2	2	2	2	2	2	2	2
14.	91623938861	Spring washer- A10		2	2	2	2	2	2	2	2	2	2	2	2
15.	79410003066	Hex bolt M10X30 DIN933/8.8		18	22	22	22	22	18	18	22	28	28	2	18
16.	1.375.974	Shaft		4	4	4	4	4	4	4	4	4	4	-	4
17.	1.313.536	Double joint coupling		-	2	2	2	2	-	-	2	2	2	-	-
17.	1.355.710	PTO drive shaft		2	-	-	-	-	2	-	-	-	-	-	2
17.	1.356.529	PTO drive shaft		-	-	-	-	-	-	2	-	-	-	-	-
18.	1.376.445	Hex bolt - M10x30		-	4	4	4	4	-	-	4	8	8	-	-
19.	70710000066	M10 DIN980/8.8 Hex nut		16	24	24	24	20	16	16	24	34	34	-	16
20.	1.372.248	Shield - LH		-	-	-	-	-	-	-	-	1	1	-	-
20.	1.372.251	Shield - RH		-	-	-	-	-	-	-	-	1	1	-	-
20.	1.372.040	Shield - LH		-	-	-	-	-	-	1	-	-	-	-	-
20.	1.372.041	Shield - RH		-	-	-	-	-	-	1	-	-	-	-	-
20.	1.379.396	Shield - LH	6-8R, 12R50cm, 4+2R, 4+2x2R	1	-	-	-	-	1	-	-	-	-	-	1
20.	1.379.397	Shield - RH	6-8R, 12R50cm, 4+2R, 4+2x2R	1	-	-	-	-	1	-	-	-	-	-	1
20.	1.379.392	Shield - LH	6- 8R;12R50cm, 4+2R, 4+2x2R	-	1	1	1	1	-	-	1	-	-	-	-
20.	1.379.391	Shield - RH	6- 8R;12R50cm, 4+2R, 4+2x2R	-	1	1	1	1	-	-	1	-	-	-	-
20.	1.379.060	Shield - LH	12R56-76,2cm;16R70-76,2cm	1	-	-	-	-	1	-	-	-	-	-	1
20.	1.379.062	Shield - RH	12R56-76,2cm;16R70-76,2cm	1	-	-	-	-	1	-	-	-	-	-	1
20.	1.378.985	Shield - LH	12R56-76,2cm;16R70-76,2cm	-	1	1	1	-	-	-	1	-	-	-	-
20.	1.378.997	Shield - RH	12R56-76,2cm;16R70-76,2cm	-	1	1	1	-	-	-	1	-	-	-	-
20.	1.372.441	Shield - LH		-	-	-	-	-	-	-	-	-	-	1	-
20.	1.372.442	Shield - RH		-	-	-	-	-	-	-	-	-	-	1	-
21.	91623938761	Spring washer - A8		26	22	22	22	22	26	28	22	24	24	12	26
22.	79408002566	Hex bolt M8x25 - DIN933/8.8		6	4	4	4	4	6	6	4	6	6	8	6
23.	73508000066	Hex nut M8 - DIN934		6	4	4	4	4	6	6	4	4	4	8	6
24.	79408001666	Hex bolt M8x16 - DIN933/8.8		10	8	8	8	8	10	8	8	8	8	8	10
25.	1.372.247	Shield - LH		-	-	-	-	-	-	-	-	1	1	-	-
25.	1.372.250	Shield - RH		-	-	-	-	-	-	-	-	1	1	-	-
25.	1.378.148	Shield - LH	6-8 R,12R50cm, 4+2, 4+2x2R	1	-	-	-	-	1	-	-	-	-	-	1
25.	1.378.149	Shield - RH	6-8 R,12R50cm, 4+2, 4+2x2R	1	-	-	-	-	1	-	-	-	-	-	1
25.	1.378.168	Shield - LH		-	-	-	-	-	-	1	-	-	-	-	-
25.	1.378.169	Shield - RH		-	-	-	-	-	-	1	-	-	-	-	-
25.	1.378.154	Shield - LH	6-8 R,12R50cm, 4+2, 4+2x2R	-	1	1	1	1	-	-	1	-	-	-	-

Note: Quantities are not depend on the type of corn head.
Application of item 8 is depends on the backlash of the gears.
For item 12 & 27: 1.377.105 and 1.377.106 in case of folding machines with exterior drive only.
For item 35: for 70 cm folding machines only.

* For 4+2R & 4+2x2R Corn Heads with interior drive mounted to JD combines (except Hill Master) with lateral tilt function only.

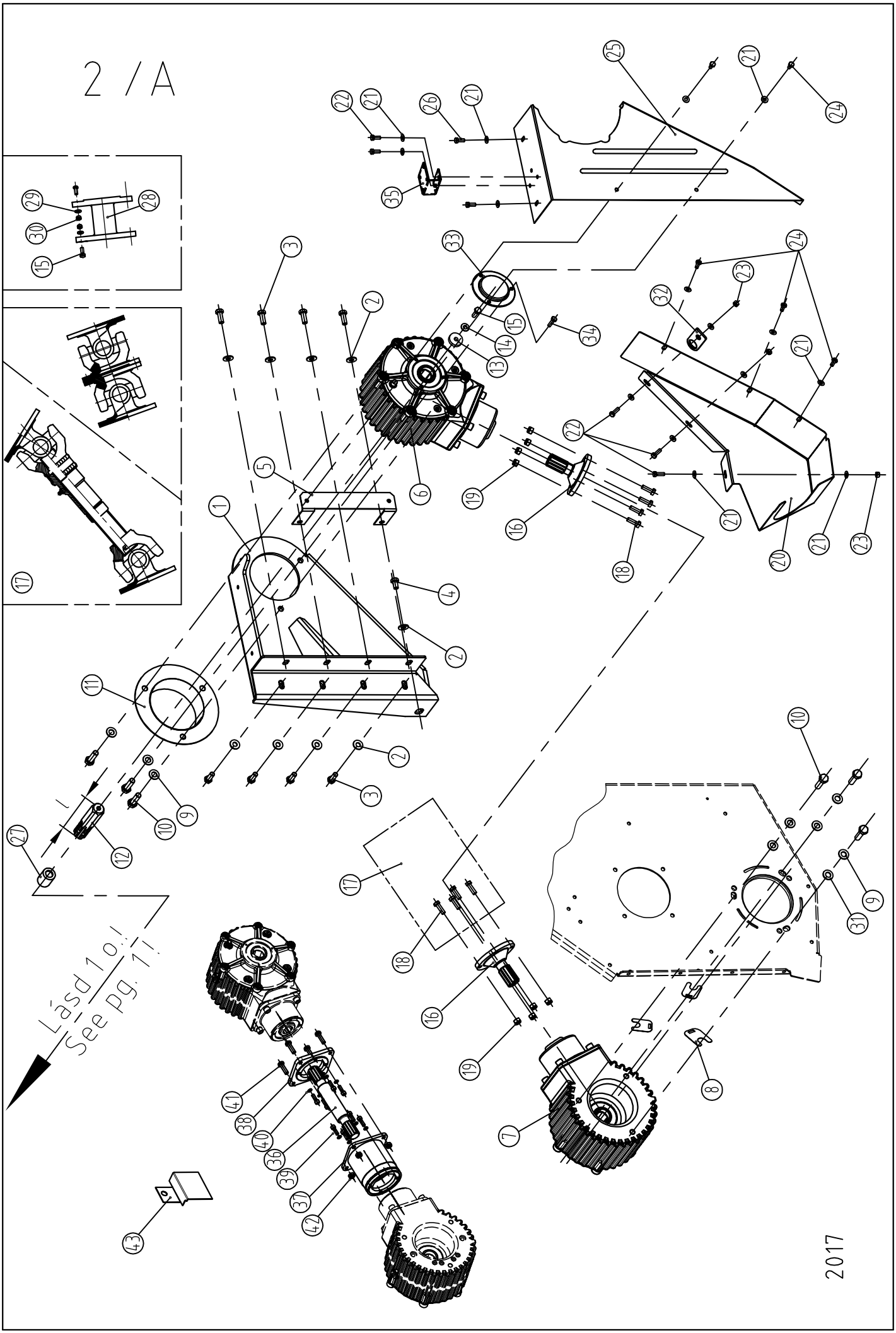
2 / A
Lásd 10.!
See pg. 11.
2017

DRIVE (2016 →)

Ref.	Part Number	Description		CLAAS	JD direct, Case 1000-2000, AGCO direct DON1500, Vector,PCM, Torum-740	AGCO variátor	JD variátor	MF 8570	MF 32-42	Fiat Laverda	CNH	CNH 4+2; 4+2x2R	NH TX	JD 2060, 2260 INT	FAHR
25.	1.378.155	Shield - RH	6-8 R,12R50cm, 4+2, 4+2x2R	-	1	1	1	1	-	-	1	-	-	-	-
25.	1.379.063	Shield - LH	12R56-76,2 cm;16R70-76,2cm	1	-	-	-	-	1	-	-	-	-	-	1
25.	1.379.064	Shield - RH	12R56-76,2 cm;16R70-76,2cm	1	-	-	-	-	1	-	-	-	-	-	1
25.	1.378.987	Shield - LH	12R56-76,2cm;16R70-76,2cm	-	1	1	1	-	-	-	1	-	-	-	-
25.	1.378.999	Shield - RH	12R56-76,2cm;16R70-76,2cm	-	1	1	1	-	-	-	1	-	-	-	-
25.	1.373.677	Shield - LH		-	-	-	-	-	-	-	-	-	-	1	-
25.	1.373.678	Shield - RH		-	-	-	-	-	-	-	-	-	-	1	-
26.	79408002066	Hex bolt M8x20 - DIN933/8.8		4	6	6	6	6	4	4	6	6	6	4	4
27.	1.377.106	Spacer **(see note below!)**		-	2	2	2	2	2	-	2	2	2	-	2
28.	1.327.806	Distance piece		-	-	-	-	-	-	-	-	2	2	-	-
29.	72210000060	Spring washer M10 - DIN128/A		-	-	-	-	-	-	-	-	16	16	-	-
30.	73510000066	Hex nut M10 - DIN934		-	-	-	-	-	-	-	-	16	16	-	-
31.	1.378.760	Washer		6	6	6	6	6	6	6	6	6	6	6	6
32.	1.379.146	Loop		2	2	2	2	2	2	2	2	2	2	2	2
33.	1.372.314	Cover		-	2	2	2	2	2	2	2	2	2	2	2
34.	79406001066	Hex bolt M6x10 - DIN933/8.8		6	6	6	6	6	6	6	6	6	6	6	6
35.	1.372.315	Holder		-	1	1	1	-	-	-	1	1	1	-	-
36.	1.373.656	Shaft		-	-	-	-	-	-	-	-	-	-	2	-
37.	1.372.435	Connecting assy.		-	-	-	-	-	-	-	-	-	-	2	-
38.	1.372.439	Plate		-	-	-	-	-	-	-	-	-	-	2	-
39.	80208002563	Hex socket head cap bolt M8x25 - DIN912/10.9		-	-	-	-	-	-	-	-	-	-	8	-
40.	71808000060	Spring washer M8 - DIN7980		-	-	-	-	-	-	-	-	-	-	8	-
41.	79410003566	Hex bolt M10X35 DIN933/8.8		-	-	-	-	-	-	-	-	-	-	4	-
42.	74910000066	Hex nut - plastic insert M10 - DIN985		-	-	-	-	-	-	-	-	-	-	4	-
43.	1.373.681	Cover plate - LH		-	-	-	-	-	-	-	-	-	-	1	-
43.	1.373.682	Cover plate - RH		-	-	-	-	-	-	-	-	-	-	1	-
-	1.372.709	Gearbox Bracket kit left (items 1-3,9-10,13-15,17-23,25-26,33-34)	6-8 R,12R50cm, 4+2, 4+2x2R	-	1	1	1	1	-	-	1	-	-	-	-
-	1.372.710	Gearbox Bracket kit right (items 1-3,9-10,13-15,17-23,25-26,33-34)	6-8 R,12R50cm, 4+2, 4+2x2R	-	1	1	1	1	-	-	1	-	-	-	-
-	1.372.717	Gearbox Bracket kit left, right (items 1-3,9-10,13-15,18-23,25-26,28,33-34)	4+2R, 4+2x2R	-	-	-	-	-	-	-	-	1	1	-	-
-	1.372.711	Gearbox Bracket kit left (items 1-3,9-10,13-15,17-23,25-26,33-34)	12R56-76,2cm;16R70-76,2cm	-	1	1	1	-	-	-	1	-	-	-	-
-	1.372.712	Gearbox Bracket kit right (items 1-3,9-10,13-15,17-23,25-26,33-34)	12R56-76,2cm;16R70-76,2cm	-	1	1	1	-	-	-	1	-	-	-	-
-	1.372.713	Gearbox Bracket kit left (LEXION group) (items 1-3,9-10,13-15,17-23,25-26,33-34)	6-8 R,12R50cm, 4+2, 4+2x2R	1	-	-	-	-	1	-	-	-	-	-	1
-	1.372.714	Gearbox Bracket kit right (LEXION group) (items 1-3,9-10,13-15,17-23,25-26,33-34)	6-8 R,12R50cm, 4+2, 4+2x2R	1	-	-	-	-	1	-	-	-	-	-	1
-	1.372.715	Gearbox Bracket kit left (LEXION group) (items 1-3,9-10,13-15,17-23,25-26,33-34)	12R56-76,2 cm;16R70-76,2cm	1	-	-	-	-	1	-	-	-	-	-	1
-	1.372.716	Gearbox Bracket kit right (LEXION group) (items 1-3,9-10,13-15,17-23,25-26,33-34)	12R56-76,2 cm;16R70-76,2cm	1	-	-	-	-	1	-	-	-	-	-	1

Note: Quantities are not depend on the type of corn head.
Application of item 8 is depends on the backlash of the gears.
For item 12 & 27: 1.377.105 and 1.377.106 in case of folding machines with exterior drive only.
For item 35: for 70 cm folding machines only.

* For 4+2R & 4+2x2R Corn Heads with interior drive mounted to JD combines (except Hill Master) with lateral tilt function only.

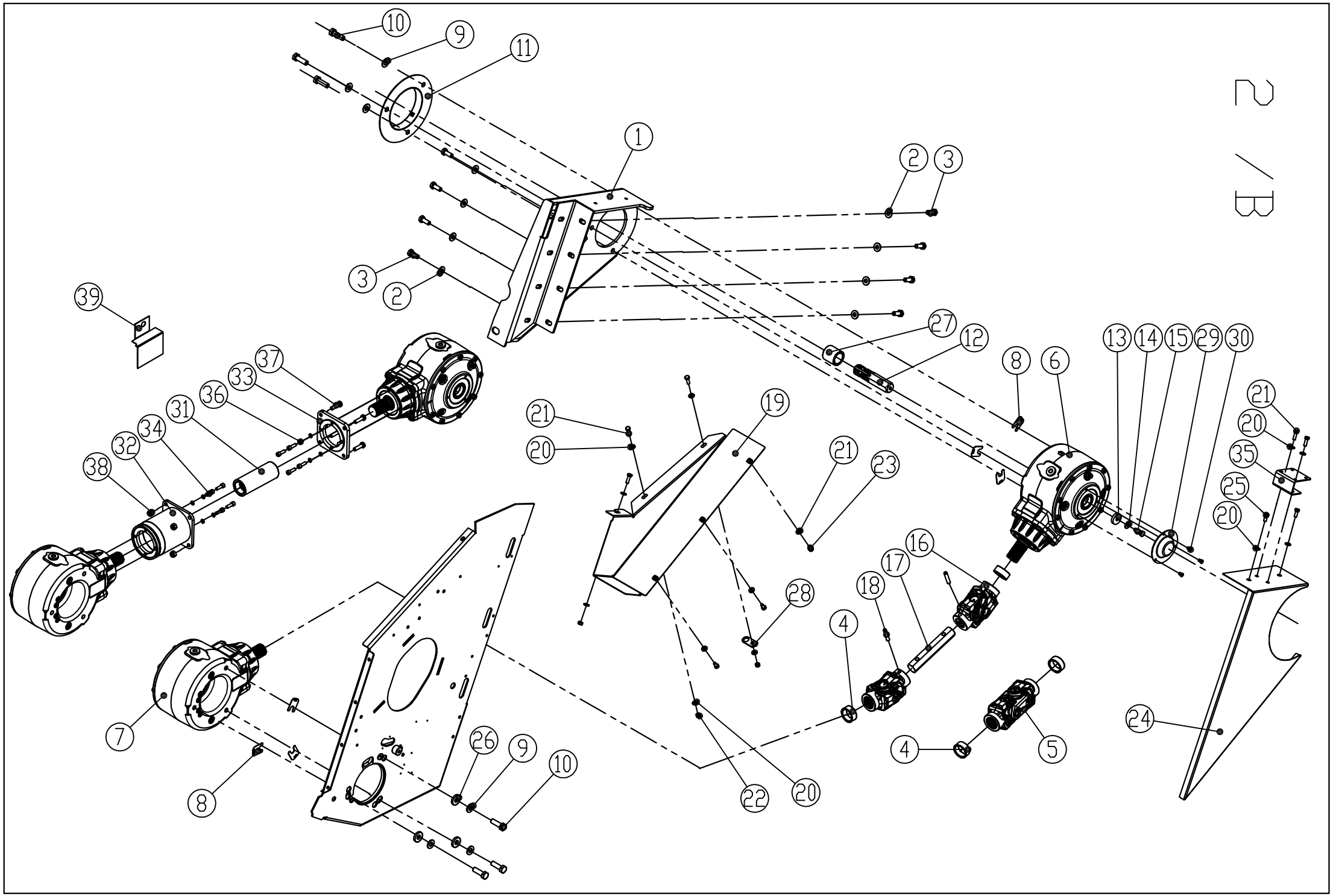
10
9
11
1
2
3
3
2
39
37
33
36
31
34
32
38
27
12
8
6
13
14
15
29
30
21
20
35
25
20
19
21
20
21
23
28
16
17
18
4
4
5
24
7
8
26
9
10
22
20

DRIVE (2016 →)

Ref.	Part Number	Description		CLAAS	JD direct, Case 1000-2000, AGCO direct DON1500, Vector,PCM, Torum-740	AGCO variátor	JD variátor	MF 8570	MF 32-42	Fiat Laverda	CNH	CNH 4+2; 4+2x2R	NH TX ->2001	JD 2060, 2260 INT	FAHR
1.	1.378.128	Console - LH		1	-	-	-	-	1	-	-	-	-	-	1
1.	1.378.129	Console - RH		1	-	-	-	-	1	-	-	-	-	-	1
1.	1.378.144	Console - LH		-	-	-	-	-	-	1	-	-	-	-	-
1.	1.378.145	Console - RH		-	-	-	-	-	-	1	-	-	-	-	-
1.	1.378.140	Console - LH		-	1	1	1	1	-	-	1	-	-	-	-
1.	1.378.141	Console - RH		-	1	1	1	1	-	-	1	-	-	-	-
1.	1.372.245	Console - LH		-	-	-	-	-	-	-	-	1	1	-	-
1.	1.372.246	Console - RH		-	-	-	-	-	-	-	-	1	1	-	-
1.	1.373.675	Console - LH		-	-	-	-	-	-	-	-	-	-	1	-
1.	1.373.676	Console - RH		-	-	-	-	-	-	-	-	-	-	1	-
2.	91623938961	Spring washer - A12		16	16	16	16	16	16	16	16	16	16	6	16
3.	79412003066	Hex bolt M12x30 - DIN933/8.8		16	16	16	16	16	16	16	16	16	16	6	16
4.	1.372.543	Spacer		4	4	4	4	4	4	4	4	4	4	-	4
5.	1.372.479	Double joint coupling		-	2	2	2	2	-	-	2	-	-	-	-
5.	1.372.540	Double joint coupling		-	-	-	-	-	-	-	-	2	2	-	-
6.	1.372.475	Input gearbox		-	2	-	-	-	-	2	-	-	-	2	-
6.	1.372.477	Input gearbox		2	-	-	2	-	-	-	-	-	-	-	-
6.	1.372.476	Input gearbox		-	-	-	-	2	2	-	2	2	2	-	2
6.	1.372.478	Input gearbox		-	-	2	-	-	-	-	-	-	-	-	-
7.	1.372.476	Output gearbox		2	2	2	2	-	-	2	2	2	-	2	-
7.	1.372.477	Output gearbox		-	-	-	-	2	-	-	-	-	-	-	2
7.	1.372.478	Output gearbox		-	-	-	-	-	2	-	-	-	2	-	-
8.	1.376.752	Shim		10	10	10	10	10	10	10	10	10	10	10	10
9.	91623939061	Spring washer - A14		12	12	12	12	12	12	12	12	12	12	12	12
10.	79414004566	Hex bolt M14x45 - DIN933/8.8		6	6	6	6	6	6	6	6	6	6	6	6
11.	1.376.436	Safety tube		2	2	2	2	2	2	2	2	2	2	2	2
12.	1.375.973	Input shaft (l=155)		2	2	2	2	2	2	2	2	2	2	2	2
12.	1.377.105	Input shaft (l=205) **(see note below!)**		2	2	2	2	2	2	2	2	-	2	2	2
12.*	1.372.371	Imput shaft (l=139,5) **(see note below!)**		-	2	-	2	-	-	-	2	-	2	-	-
13.	1.376.444	Washer		2	2	2	2	2	2	2	2	2	2	2	2
14.	91623938861	Spring washer- A10		2	2	2	2	2	2	2	2	2	2	2	2
15.	79410003066	Hex bolt M10X30 DIN933/8.8		2	2	2	2	2	2	2	2	2	2	2	2
16.	1.372.481	Joint coupling		4	-	-	-	-	4	4	-	-	-	-	4
17.	1.372.514	Shaft		2	-	-	-	-	2	-	-	-	-	-	2
17.	1.372.663	Shaft		-	-	-	-	-	-	2	-	-	-	-	-
18.	73010005000	Spring pin 10x50 - DIN1481		4	-	-	-	-	4	4	-	-	-	-	4
19.	1.372.248	Shield - LH		-	-	-	-	-	-	-	-	1	1	-	-
19.	1.372.251	Shield - RH		-	-	-	-	-	-	-	-	1	1	-	-
19.	1.372.040	Shield - LH		-	-	-	-	-	-	1	-	-	-	-	-
19.	1.372.041	Shield - RH		-	-	-	-	-	-	1	-	-	-	-	-
19.	1.379.396	Shield - LH	6-8R, 12R50cm, 4+2R, 4+2x2R	1	-	-	-	-	1	-	-	-	-	-	1
19.	1.379.397	Shield - RH	6-8R, 12R50cm, 4+2R, 4+2x2R	1	-	-	-	-	1	-	-	-	-	-	1
19.	1.379.392	Shield - LH	6- 8R;12R50cm, 4+2R, 4+2x2R	-	1	1	1	1	-	-	1	-	-	-	-
19.	1.379.391	Shield - RH	6- 8R;12R50cm, 4+2R, 4+2x2R	-	1	1	1	1	-	-	1	-	-	-	-
19.	1.379.060	Shield - LH	12R56-76,2cm;16R70-76,2cm	1	-	-	-	-	1	-	-	-	-	-	1
19.	1.379.062	Shield - RH	12R56-76,2cm;16R70-76,2cm	1	-	-	-	-	1	-	-	-	-	-	1
19.	1.378.985	Shield - LH	12R56-76,2cm;16R70-76,2cm	-	1	1	1	-	-	-	1	-	-	-	-
19.	1.378.997	Shield - RH	12R56-76,2cm;16R70-76,2cm	-	1	1	1	-	-	-	1	-	-	-	-
19.	1.372.441	Shield - LH		-	-	-	-	-	-	-	-	-	-	1	-
19.	1.372.442	Shield - RH		-	-	-	-	-	-	-	-	-	-	1	-
20.	91623938761	Spring washer - A8		26	22	22	22	22	26	28	22	24	24	12	26
21.	79408002566	Hex bolt M8x25 - DIN933/8.8		6	4	4	4	4	6	6	4	6	6	8	6
22.	73508000066	Hex nut M8 - DIN934		6	4	4	4	4	6	6	4	4	4	8	6
23.	79408001666	Hex bolt M8x16 - DIN933/8.8		10	8	8	8	8	10	8	8	8	8	8	10
24.	1.372.541	Shield - LH		-	-	-	-	-	-	-	-	1	1	-	-
24.	1.372.542	Shield - RH		-	-	-	-	-	-	-	-	1	1	-	-
24.	1.372.516	Shield - LH	6-8 R,12R50cm, 4+2, 4+2x2R	1	-	-	-	-	1	-	-	-	-	-	1
24.	1.372.517	Shield - RH	6-8 R,12R50cm, 4+2, 4+2x2R	1	-	-	-	-	1	-	-	-	-	-	1
24.	1.372.654	Shield - LH		-	-	-	-	-	-	1	-	-	-	-	-
24.	1.372.655	Shield - RH		-	-	-	-	-	-	1	-	-	-	-	-
24.	1.372.518	Shield - LH	6-8 R,12R50cm, 4+2, 4+2x2R	-	1	1	1	1	-	-	1	-	-	-	-
24.	1.372.519	Shield - RH	6-8 R,12R50cm, 4+2, 4+2x2R	-	1	1	1	1	-	-	1	-	-	-	-
24.	1.372.559	Shield - LH	12R56-76,2 cm;16R70-76,2cm	1	-	-	-	-	1	-	-	-	-	-	1
24.	1.372.560	Shield - RH	12R56-76,2 cm;16R70-76,2cm	1	-	-	-	-	1	-	-	-	-	-	1
24.	1.372.557	Shield - LH	12R56-76,2cm;16R70-76,2cm	-	1	1	1	-	-	-	1	-	-	-	-
24.	1.372.558	Shield - RH	12R56-76,2cm;16R70-76,2cm	-	1	1	1	-	-	-	1	-	-	-	-
24.	1.372.657	Shield - LH		-	-	-	-	-	-	-	-	-	-	1	-
24.	1.372.658	Shield - RH		-	-	-	-	-	-	-	-	-	-	1	-
25.	79408002066	Hex bolt M8x20 - DIN933/8.8		4	6	6	6	6	4	4	6	6	6	4	4
26.	1.378.760	Washer		6	6	6	6	6	6	6	6	6	6	6	6
27.	1.377.106	Spacer **(see note below!)**		-	2	2	2	2	2	-	2	2	2	-	2
28.	1.379.146	Loop		2	2	2	2	2	2	2	2	2	2	2	2
29.	1.372.597	Cover		2	2	2	2	2	2	2	2	2	2	2	2
30.	79406001066	Hex bolt M6x10 - DIN933/8.8		6	6	6	6	6	6	6	6	6	6	6	6
31.	1.372.659	Shaft		-	-	-	-	-	-	-	-	-	-	2	-
32.	1.372.661	Connecting assy.		-	-	-	-	-	-	-	-	-	-	2	-
33.	1.372.439	Plate		-	-	-	-	-	-	-	-	-	-	2	-
34.	80208002563	Hex socket head cap bolt M8x25 - DIN912/10.9		-	-	-	-	-	-	-	-	-	-	16	-
35.	1.372.315	Holder		-	1	1	1	-	-	-	1	1	1	-	-
36.	71808000060	Spring washer M8 - DIN7980		-	-	-	-	-	-	-	-	-	-	16	-
37.	79410003566	Hex bolt M10X35 DIN933/8.8		-	-	-	-	-	-	-	-	-	-	8	-
38.	74910000066	Hex nut - plastic insert M10 - DIN985		-	-	-	-	-	-	-	-	-	-	8	-
39.	1.373.681	Cover plate - LH		-	-	-	-	-	-	-	-	-	-	1	-
39.	1.373.682	Cover plate - RH		-	-	-	-	-	-	-	-	-	-	1	-

Note: Quantities are not depend on the type of corn head.
Application of item 8 is depends on the backlash of the gears.
For item 12 & 27: 1.377.105 and 1.377.106 in case of folding machines with exterior drive only.
For item 35: for 70 cm folding machines only.

* For 4+2R & 4+2X2R Corn Heads interior drive mounted to JD combines (except Hill Master) with lateral tilt function only.

3

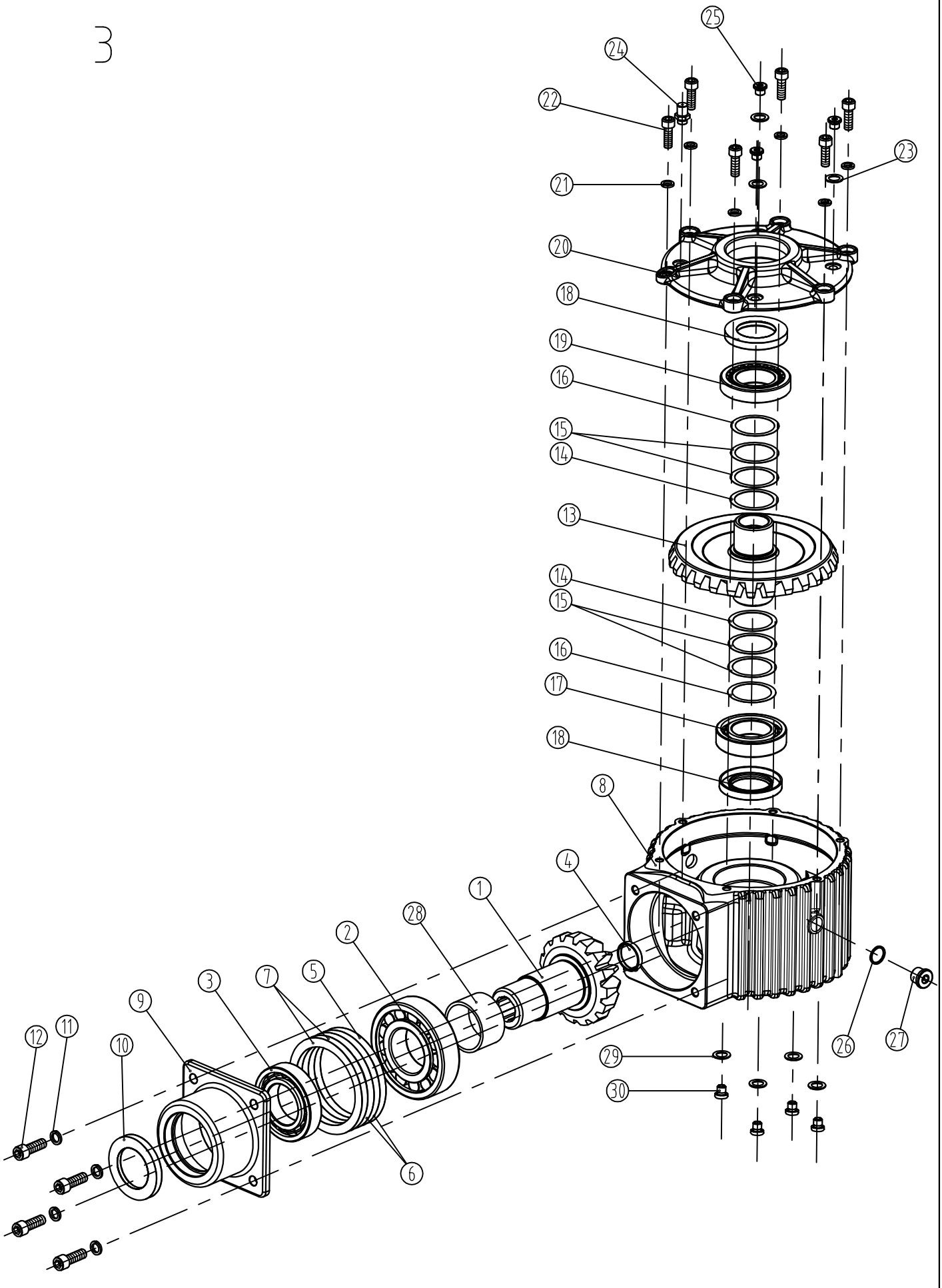
25
24
22
23
21
20
18
19
16
15
14
13
14
15
16
17
18
8
4
1
28
2
3
7
5
9
12
11
10
6
29
30
26
27

2020

INPUT GEARBOX

Ref.	Part Number	Description	All models
1.	1.376.073	Drive pinion 15T	2
1.	1.376.077	Drive pinion 12T	2
1.	1.376.075	Drive pinion 11T	2
1.	1.373.870	Drive pinion 18T	2
2.	87000131262	Bearing NUP312	4
3.	87010621114	Bearing 6211-2RS	4
4.	85803800700	Closing cup (38x7)	4
5.	71610513001	Shim 105x130x0.1 - DIN988	4
6.	71610513002	Shim 105x130x0.2 - DIN988	8
7.	71610513005	Shim 105x130x0.5 - DIN988	8
8.	1.376.071	Gearbox housing	4
9.	1.376.079	Bearing housing	4
9.	1.372.434*	Bearing housing	4
10.	85805508500	Seal 55x85x10	4
11.	71812000060	Spring washer M12 - DIN7980	16
12.	80212035063	Hex socket head cap bolt M12x35 - DIN912/10.9	16
13.	1.376.074	Bevel-gear 27T (gearbox: 1.376.068)	2
13.	1.376.078	Bevel-gear 27T (gearbox: 1.376.069)	2
13.	1.376.076	Bevel-gear 27T (gearbox: 1.376.070)	2
13.	1.373.871	Bevel-gear 27T (gearbox: 1.373.898)	2
14.	71650062010	Shim 50x62x0.1 - DIN988	8
15.	71650062020	Shim 50x62x0.2 - DIN988	16
16.	71650062050	Shim 50x62x0.5 - DIN988	8
17.	87000621010	Bearing 6210	4
18.	85805080100	Seal 50x80x10	8
19.	87013021001	Bearing 30210 - DIN720	4
20.	1.376.072	Cover	4
21.	71810000060	Spring washer M10 - DIN7980	24
22.	80310003063	Hex socket head cap bolt M10x30 - DIN6912/10.9	24
23.	05200001200	Copper washer M12 - DIN7603	20
24.	1.309.247	Breather	4
25.	1.376.783 - M12x1.5	Closing screw	20
26.	05200200024	Copper washer 20x24x1.5 - DIN7603	8
27.	79202001560	Closing screw M20x1.5 - DIN908	8
28.	1.377.265	Spacer	4
29.	05200000800	Copper washer 8x12x1 - DIN7603	16
30.	79200800160	Closing screw M8x1 - DIN908	16
	1.376.068	Gearbox 27-15	2
	1.376.069	Gearbox 27-12	2
	1.376.070	Gearbox 27-11	2
	1.373.898	Gearbox 27-18	2
	1.372.443	Gearbox 27-12	2
	1.372.444	Gearbox 27-11	2

Note: Application of item 1 and 13 depends on the type of combine.
Application of shims depends on the backlash of the gears.
Items marked with * are needed for 1.372.443 1.372.444 only!

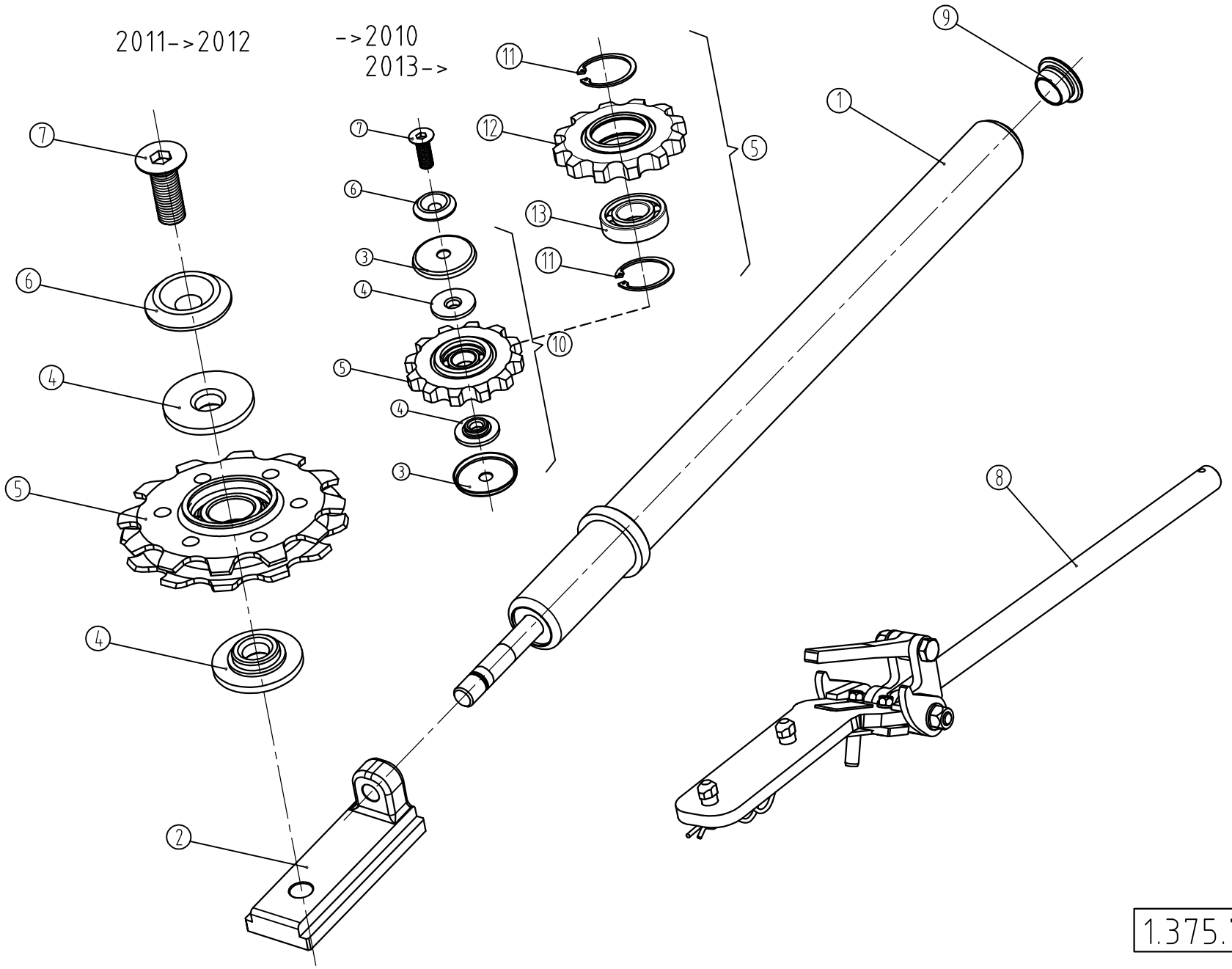

2020

1.375.755

GATHERING CHAIN ADJUSTER

Ref.	Part Number	Description		6 row	7 row	8 row	9 row	12 row	16 row
1.	1.375.756	Compressed coiled spring		12	14	16	18	24	32
2.	1.375.760	Slide		12	14	16	18	24	32
3.	1.375.761	Labyrinth	→2010, 2013→	24	28	32	36	48	64
4.	1.375.762	Spacer	→2010	24	28	32	36	48	64
4.	1.378.503	Spacer	2011, 2012	24	28	32	36	48	64
4.	1.379.082	Bushing	2013→	24	28	32	36	48	64
5.	1.375.757	Sprocket (with bearing) z=12, t=30	→2010	12	14	16	18	24	32
5.	1.378.502	Sprocket (with bearing) z=12, t=30	2011, 2012	12	14	16	18	24	32
5.	1.379.081	Sprocket assy (items 11-13)	2013→	12	14	16	18	24	32
6.	1.375.758	Washer		12	14	16	18	24	32
7.	80414005063	Hex socket countersunk-head bolt M14x50 - DIN7991/10.9		12	14	16	18	24	32
8.	2.403.473	Gathering chain installation instrument		1	1	1	1	1	1
8.	2.405.227	Gathering chain installation instrument	2013→	1	1	1	1	1	1
9.	1.377.268	Plug		12	14	16	18	24	32
10.	1.379.153	Sprocket pre-assy. (items 3, 4 and 5)		12	14	16	18	24	32
11.	70100005201	Retaining ring - internal 52x2 - DIN472		24	28	32	36	48	64
12.	1.379.080	Sprocket		12	14	16	18	24	32
13.	87001620514	Bearing 6205 2 rs - DIN625		12	14	16	18	24	32
	1.375.755	Gathering chain compressed coiled spring assy (items 1, 2, 3, 4, 5, 6,7, 9)		12	14	16	18	24	32

5/A

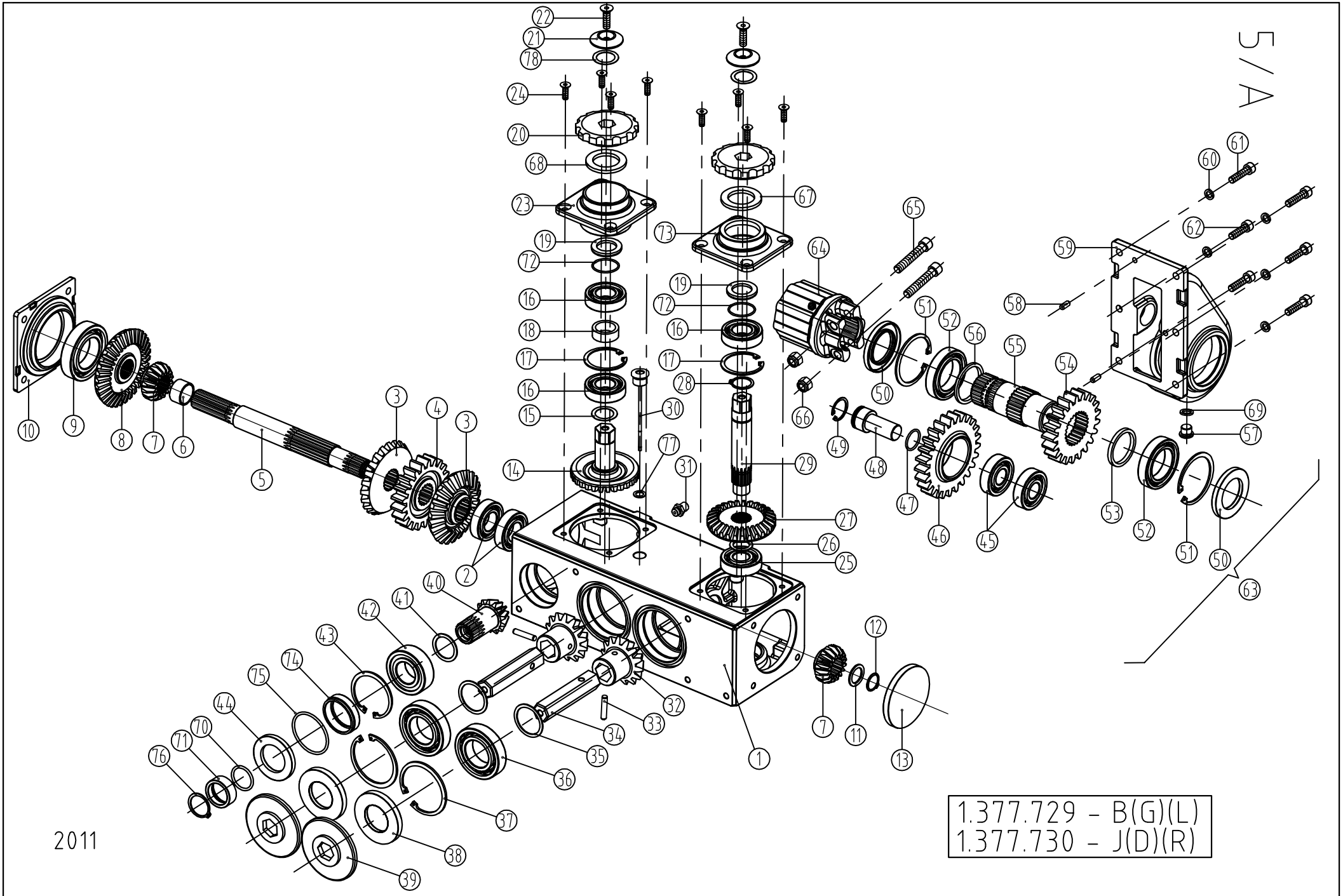

2011

1.377.729 - B(G)(L)
1.377.730 - J(D)(R)

SNAPPING UNIT GEARBOX

Ref.	Part Number	Description		6 row	8 row	9 row	12 row
1.	1.375.722	Gearbox housing		6	8	9	12
2.	87000620511	Bearing 6206 - DIN625		12	16	18	24
3.	1.375.691	Bevel gear 23T		12	16	18	24
4.	1.375.693	Cyl. gear 21T		6	8	9	12
5.	1.375.706	Shaft		6	8	9	12
6.	1.375.754	Spacer		6	8	9	12
7.	1.375.689	Bevel gear 16T		12	16	18	24
8.	1.375.688	Bevel gear 33T	→2010	6	8	9	12
8.	1.378.507	Bevel gear 33T	2011→	6	8	9	12
9.	87000621010	Bearing 6210 - DIN625	→2010	6	8	9	12
9.	87000421010	Bearing 4210 - DIN625	2011→	6	8	9	12
10.	1.375.710	Bearing housing		6	8	9	12
11.	71625035200	Shim 25x35x2 - DIN988		6	8	9	12
12.	70200002501	Retaining ring - external 25x1.2 - DIN471		6	8	9	12
13.	85801001000	Seal 100x10		6	8	9	12
14.	1.377.733	Bevel gear 29T		6	8	9	12
15.	71630042050	Shim 30x42x0.5 - DIN988		12	16	18	24
15.	71630042020	Shim 30x42x0.2 - DIN988		12	16	18	24
15.	71630042010	Shim 30x42x0,1 - DIN988		6	8	9	12
16.	87001620614	Bearing 6206-2RS - DIN625		18	24	27	36
17.	70100006201	Retaining ring - internal 62x2 - DIN472		12	16	19	24
18.	1.375.703	Spacer		6	8	9	12
19.	1.377.734	Shim		6	8	9	12
20.	1.377.722	Sprocket z=12 t=30		12	16	18	24
21.	1.375.019	Washer		12	16	18	24
22.	80401003063	Hex socket countersunk-head bolt M10x30 - DIN7991/10.9		12	16	18	24
23.	1.375.712	Bearing housing - RH		6	8	9	12
24.	80400802563	Hex socket countersunk-head bolt M8x25 - DIN7991/10.9		48	64	72	96
25.	87010630510	Bearing 6305 - DIN625		6	8	9	12
26.	71625035050	Shim 25x35x0.5 - DIN988		12	16	18	24
26.	71625035020	Shim 25x35x0.2 - DIN988		12	16	18	24
26.	71625035010	Shim 25x35x0.1 - DIN988		6	8	9	12
27.	1.375.700	Bevel gear 29T		6	8	9	12
28.	70200003001	Retaining ring - external 30x1.5 - DIN471		6	8	9	12
29.	1.377.731	Shaft		6	8	9	12
30.	1.377.093	Dipstick		6	8	9	12
31.	1.309.247	Breather		6	8	9	12
32.	1.375.692	Bevel gear 14T		12	16	18	24
33.	73108004001	Groved pin 8x40 - DIN1473		12	16	18	24
34.	1.375.708	Hex shaft		12	16	18	24
35.	71645055050	Shim 45x55x0.5 - DIN988		24	32	36	48
35.	71645055020	Shim 45x55x0.2 - DIN988		24	32	36	48
35.	71645055010	Shim 45x55x0.1 - DIN988		12	16	18	24
36.	87001620910	Bearing 6209 - DIN625		12	16	18	24
37.	70100008501	Retaining ring - internal 85x3 - DIN472		12	16	18	24
38.	85804508501	Seal 45x85x10 - DIN3760-AS		12	16	18	24
39.	1.375.836	Cover piece		12	16	18	24
40.	1.375.687	Bevel gear 13T		6	8	9	12
41.	71635045050	Shim 35x45x0.5 - DIN988		12	16	18	24
41.	71635045020	Shim 35x45x0.2 - DIN988		12	16	18	24
41.	71635045010	Shim 35x45x0.1 - DIN988		6	8	9	12
42.	87001420710	Bearing 4207 - DIN625		6	8	9	12
43.	70100007201	Retaining ring - internal 72x2.5 - DIN472		6	8	9	12
44.	85804506208	Seal 45x62x8 - DIN3760-AS		6	8	9	12
45.	87010630510	Bearing 6305 - DIN625		12	16	18	24
46.	1.375.694	Cyl. gear 25T		6	8	9	12
47.	30x2.65 - DIN3771	O-ring 30x2.65 - DIN3771		6	8	9	12
48.	1.375.696	Shaft		6	8	9	12
49.	70100003501	Retaining ring - internal 35x1.5 - DIN472		6	8	9	12
50.	85805008008	Seal 50x80x8 - DIN3760-AS		12	16	18	24
51.	70100008001	Retaining ring - internal 80x2.5 - DIN472		12	16	18	24
52.	87001601010	Bearing 6010 - DIN625		12	16	18	24
53.	1.375.697	Spacer		6	8	9	12

Note: application of shims depends on the backlash of the gears.

5/A

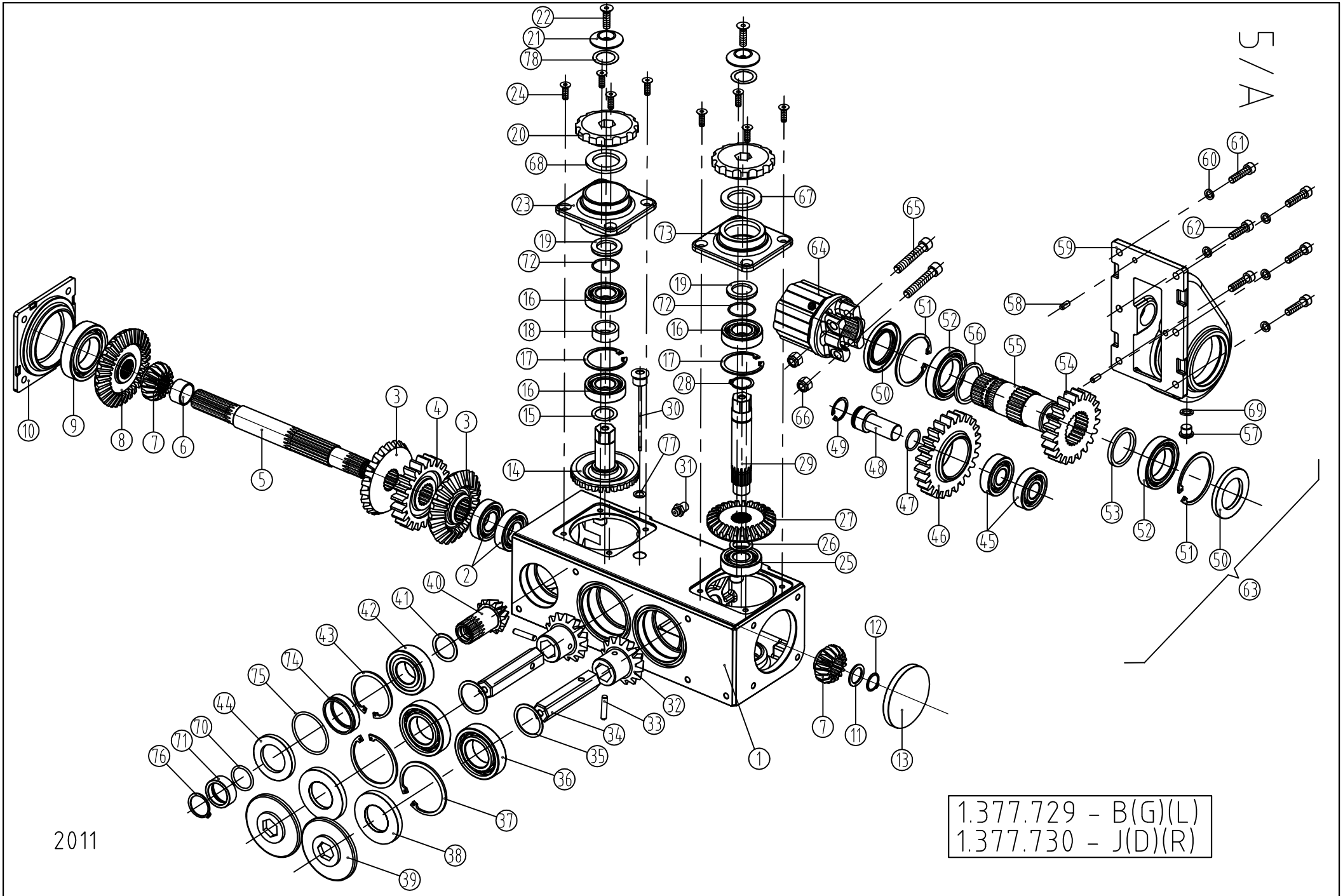

2011

1.377.729 - B(G)(L)
1.377.730 - J(D)(R)

SNAPPING UNIT GEARBOX

Ref.	Part Number	Description		6 row	8 row	9 row	12 row
54.	1.375.695	Cyl. gear 21T		6	8	9	12
55.	1.375.699	Shaft		6	8	9	12
56.	1.375.698	Spacer		6	8	9	12
57.	79201601560	Closing screw M16x1.5 - DIN908		6	8	9	12
58.	1.375.746	Dowel pin		12	16	18	24
59.	1.375.723	Gearbox housing		6	8	9	12
60.	71810000060	Spring washer M10 - DIN7980		36	48	54	72
61.	80210004063	Hex socket head cap bolt M10x40 - DIN912/10.9		30	40	45	60
62.	80210003563	Hex socket head cap bolt M10x35 - DIN912/10.9		6	8	9	12
63.	1.375.955	Gearbox assy - LH		6	8	9	12
63.	1.375.717	Gearbox assy - RH		6	8	9	12
64.	1.375.025	Safety clutch (Walterscheid)	→2016	6	8	9	12
64.	1.373.387	Safety clutch (Walterscheid) EK 33B	2017→	6	8	9	12
65.	80212006566	Hex socket head cap bolt M12x65 - DIN912/8.8	→2016	12	16	18	24
66.	74901200066	Hex nut - plastic insert M12 - DIN982	→2016	12	16	18	24
67.	85804055007	Seal 40x55x7 - DIN3760-AS		6	8	9	12
68.	85804006207	Seal 40x62x7 - DIN3760-AS		6	8	9	12
69.	05200001600	Copper washer M16 - DIN7603		6	8	9	12
70.	63003503500	O-ring 35x3.5		6	8	9	12
71.	1.375.744	Spacer		6	8	9	12
72.	63003030010	O-ring 30x3		12	16	18	24
73.	1.377.732	Bearing housing - LH		6	8	9	12
74.	1.377.775	Guide ring		6	8	9	12
75.	63007151500	O-ring 71.5x1.5	→2014	6	8	9	12
76.	70200003501	Retaining ring - external 35x1.5 - DIN471		6	8	9	12
77.	05200200024	Copper washer 20x24 - DIN7603		6	8	9	12
78.	71619026020	Shim 19x26x0,2- DIN988	2011→	12	16	18	24
78.	71619026050	Shim 19x26x0,5-DIN988	2011→	12	16	18	24
78.	71619026120	Shim 19x26x1,2-DIN988	2011→	12	16	18	24

Note: application of shims depends on the backlash of the gears.

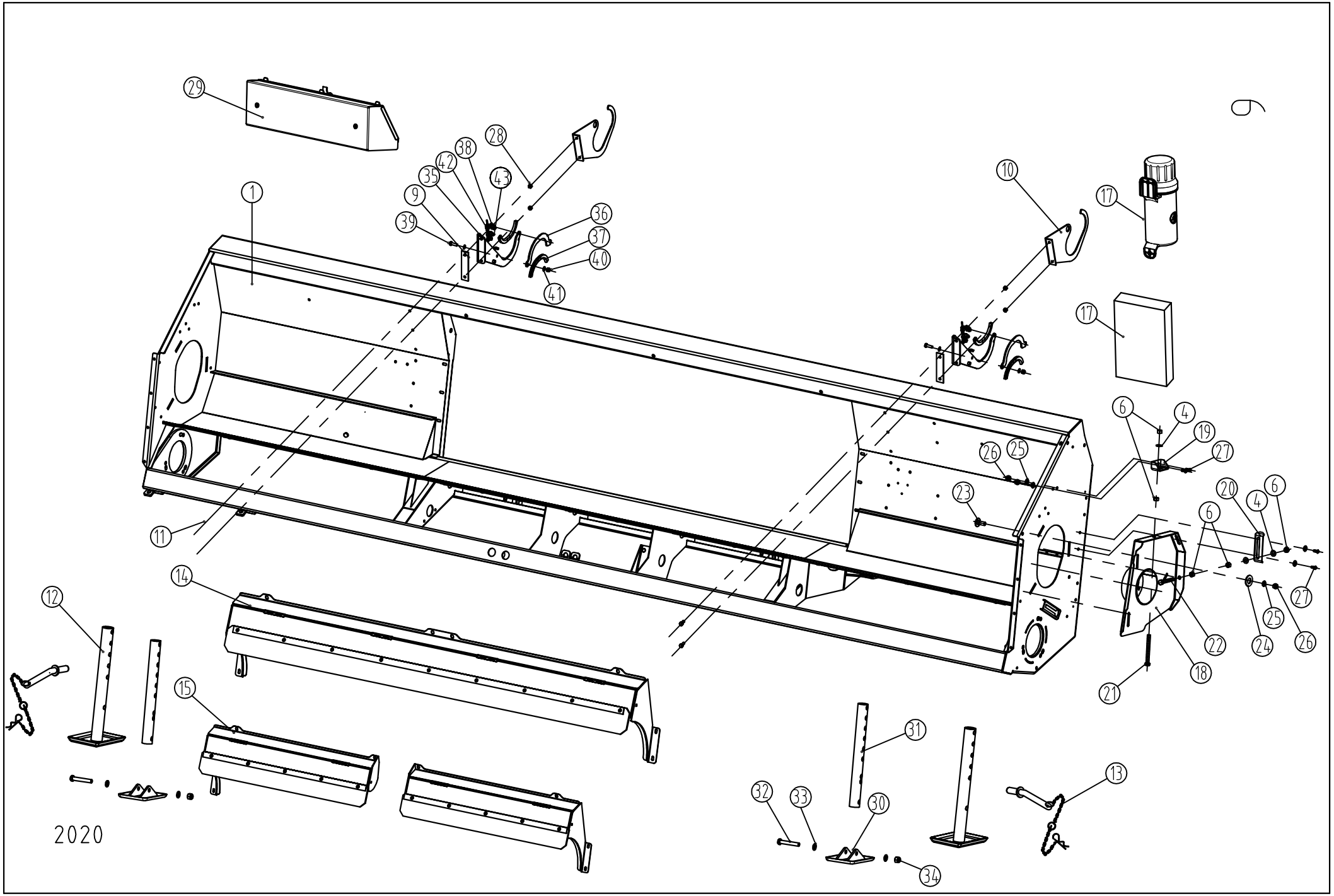
29
28
38
42
35
43
9
39
1
36
37
40
41
10
17
17
6
4
19
27
26
25
23
20
4
6
6
27
25
24
26
22
18
21
11
14
12
15
31
32
33
30
34
13
2020

FRAME ASSEMBLY - RIGID

Ref.	Part Number	Description		6R 70cm	6R 76.2cm	8R 50cm	8R 56cm	8R 70cm	8R 76.2cm	8 sor 96.5cm	12R 50cm	12R 56cm	12R 70cm	12R 76.2cm	16R 76.2cm
1.	1.377.544	Frame assy	→2010	1	-	-	-	-	-	-	-	-	-	-	-
1.	1.378.443	Frame assy	2011-2015	1	-	-	-	-	-	-	-	-	-	-	-
1.	1.379.155	Frame assy	2016→	1	-	-	-	-	-	-	-	-	-	-	-
1.	1.376.122	Frame assy	→2010	-	1	-	-	-	-	-	-	-	-	-	-
1.	1.378.444	Frame assy	2011-2015	-	1	-	-	-	-	-	-	-	-	-	-
1.	1.379.156	Frame assy	2016→	-	1	-	-	-	-	-	-	-	-	-	-
1.	1.373.100	Frame assy	2015→	-	-	1	-	-	-	-	-	-	-	-	-
1.	1.373.070	Frame assy	2015→	-	-	-	1	-	-	-	-	-	-	-	-
1.	1.376.123	Frame assy	→2010	-	-	-	-	1	-	-	-	-	-	-	-
1.	1.378.531	Frame assy	2011-2015	-	-	-	-	1	-	-	-	-	-	-	-
1.	1.379.157	Frame assy	2016→	-	-	-	-	1	-	-	-	-	-	-	-
1.	1.376.124	Frame assy	→2010	-	-	-	-	-	1	-	-	-	-	-	-
1.	1.378.532	Frame assy	2011-2015	-	-	-	-	-	1	-	-	-	-	-	-
1.	1.379.158	Frame assy	2016→	-	-	-	-	-	1	-	-	-	-	-	-
1.	1.372.718	Frame assy		-	-	-	-	-	-	1	-	-	-	-	-
1.	1.379.650	Frame assy	2014→	-	-	-	-	-	-	-	1	-	-	-	-
1.	1.379.600	Frame assy	2014→	-	-	-	-	-	-	-	-	1	-	-	-
1.	1.376.125	Frame assy	→2010	-	-	-	-	-	-	-	-	-	1	-	-
1.	1.378.533	Frame assy	2011-2015	-	-	-	-	-	-	-	-	-	1	-	-
1.	1.379.159	Frame assy	2016→	-	-	-	-	-	-	-	-	-	1	-	-
1.	1.376.126	Frame assy	→2010	-	-	-	-	-	-	-	-	-	-	1	-
1.	1.378.534	Frame assy	2011-2015	-	-	-	-	-	-	-	-	-	-	1	-
1.	1.378.900	Frame assy	2016→	-	-	-	-	-	-	-	-	-	-	1	-
1.	1.378.866	Frame assy	2013→	-	-	-	-	-	-	-	-	-	-	-	1
2.	1.376.491	Insert assy	→2010	1	1	1	1	1	1	1	1	1	1	1	1
3.	79312015066	Hex bolt M12x150 - DIN931/8.8	→2010	3	3	3	3	3	3	3	3	3	3	3	3
4.	71412000060	Washer M12 - DIN125 - 200HV	→2010	9	9	9	9	9	9	9	9	9	9	9	9
5.	91623938961	Spring washer - A12	→2010	3	3	3	3	3	3	3	3	3	3	3	3
6.	73512000066	Hex nut M12 - DIN934	→2010	13	13	13	13	13	13	13	13	13	13	13	13
7.	91623939161	Spring washer- A16	→2010	2	2	2	2	2	2	2	2	2	2	2	2
8.	79416003566	Hex bolt M16x35 - DIN933/8.8	→2010	2	2	2	2	2	2	2	2	2	2	2	2
9.	1.322.037	Plate		2	2	2	2	2	2	2	2	2	2	2	2
10.	1.354.037 *	PTO shaft support	→2019	2	2	2	2	2	2	2	2	2	2	2	2
11.	79408002066	Hex bolt M8x20 - DIN933/8.8		4	4	4	4	4	4	4	4	4	4	4	4
12.	1.352.495 *	Parking stand assy.	→2019	2	2	2	2	2	2	2	2	2	2	2	2
12.	1.372.872	Parking stand assy. (items 31-34)	2020→	2	2	2	2	2	2	2	2	2	2	2	2
13.	1.378.446	Pin assembly		2	2	2	2	2	2	2	2	2	2	2	2
14.	1.377.000	Hood assy	→2008	-	1	-	-	1	1	-	-	-	-	-	-
14.	1.377.470	Hood assy	2009-2010	1	1	-	-	1	1	-	-	-	-	-	-
14.	1.378.685	Hood assy	2011-2015	1	1	-	-	1	1	-	-	-	-	-	-
14.	1.379.440	Hood assy	2015→	1	1	1	1	1	1	-	1	-	-	-	-
15.	1.377.409	Hood assy - LH	→2008	-	-	-	-	-	-	-	-	-	1	1	-
15.	1.377.478	Hood assy - LH	2009	-	-	-	-	-	-	-	-	-	1	1	-
15.	1.378.689	Hood assy - LH	2011-2014	-	-	-	-	-	-	-	-	-	1	1	-
15.	1.378.988	Hood assy - LH	2014→	-	-	-	-	-	-	1	-	1	1	1	1
15.	1.377.410	Hood assy - RH	→2008	-	-	-	-	-	-	-	-	-	1	1	-
15.	1.377.479	Hood assy - RH	2009	-	-	-	-	-	-	-	-	-	1	1	-
15.	1.378.690	Hood assy - RH	2011-2014	-	-	-	-	-	-	-	-	-	1	1	-
15.	1.378.989	Hood assy - RH	2014→	-	-	-	-	-	-	1	-	1	1	1	1
16.	1.377.005	Supporting angle	→2008	-	3	3	3	3	3	3	3	3	3	3	3
17.	1.329.720	Storage container	2008→	1	1	1	1	1	1	1	1	1	1	1	1
17.	1.373.751	Storage container	2017→	1	1	1	1	1	1	1	1	1	1	1	1
18.	1.377.453	Bracket welded - LH	2009→	1	1	1	1	1	1	1	1	1	1	1	1
18.	1.377.454	Bracket welded - RH	2009→	1	1	1	1	1	1	1	1	1	1	1	1
19.	1.377.460	Bracket - LH	2009→	1	1	1	1	1	1	1	1	1	1	1	1
20.	1.377.461	Bracket - RH	2009→	1	1	1	1	1	1	1	1	1	1	1	1
21.	79412012066	Hex bolt M12x120 - DIN933/8.8	2009→	2	2	2	2	2	2	2	2	2	2	2	2
22.	79412009066	Hex bolt M12x90 - DIN933/8.8	2009→	2	2	2	2	2	2	2	2	2	2	2	2
23.	76308002066	Carriage bolt M8x20 - DIN603/8.8	2009→	6	6	6	6	6	6	6	6	6	6	6	6
24.	1.314.099	Washer	2009→	6	6	6	6	6	6	6	6	6	6	6	6
25.	91623938761	Spring washer A8	2009→	14	14	14	14	14	14	14	14	14	14	14	14
26.	73508000066	Hex nut M8 - DIN934	2009→	14	14	14	14	14	14	14	14	14	14	14	14
27.	78200802063	Hex socket button-head torx bolt M8x20-ISO7380/10.9	2009→	8	8	8	8	8	8	8	8	8	8	8	8
28.	70708000066	Lock nut M8 - DIN980		4	4	4	4	4	4	4	4	4	4	4	4
29.	1.379.246	Toolbox		1	1	1	1	1	1	1	1	1	1	1	1
30.	1.372.873	Stand	2020→	2	2	2	2	2	2	2	2	2	2	2	2
31.	1.372.874	Support tube	2020→	2	2	2	2	2	2	2	2	2	2	2	2
32.	79316010066	Hex head screw - M16X100 DIN 933	2020→	2	2	2	2	2	2	2	2	2	2	2	2
33.	71416000060	Washer M16 - DIN125 - 200HV	2020→	4	4	4	4	4	4	4	4	4	4	4	4
34.	74901600066	Hex nut - plastic insert M16 - DIN 982	2020→	2	2	2	2	2	2	2	2	2	2	2	2
35.	1.372.907	PTO shaft support	2020→	2	2	2	2	2	2	2	2	2	2	2	2
36.	1.372.908	Locking plate	2020→	2	2	2	2	2	2	2	2	2	2	2	2
37.	96720070601	Rubber protector - 155 mm	2020→	4	4	4	4	4	4	4	4	4	4	4	4
38.	96716002720	Lynch pin 6x27 DIN1382	2020→	2	2	2	2	2	2	2	2	2	2	2	2
39.	79408002566	Hex bolt M8x25 - DIN933/8.8	2020→	2	2	2	2	2	2	2	2	2	2	2	2
40.	74908000066	Hex nut - plastic insert M8 - DIN982	2020→	2	2	2	2	2	2	2	2	2	2	2	2
41.	71408000060	Washer M8 - DIN125 - 200HV	2020→	4	4	4	4	4	4	4	4	4	4	4	4
42.	84500000016	Chain	2020→	2	2	2	2	2	2	2	2	2	2	2	2
43.	67210000011	Key ring d=25	2020→	2	2	2	2	2	2	2	2	2	2	2	2

Note: Items 2 - 8 are not needed for New Holland adaptation.
2016-> : only for machines with higher serial number than xxxxx16xxx
* Order items 35-43 (1.372.906) instead of item 10.
* Order new item (1.372.872) instead of item 12.

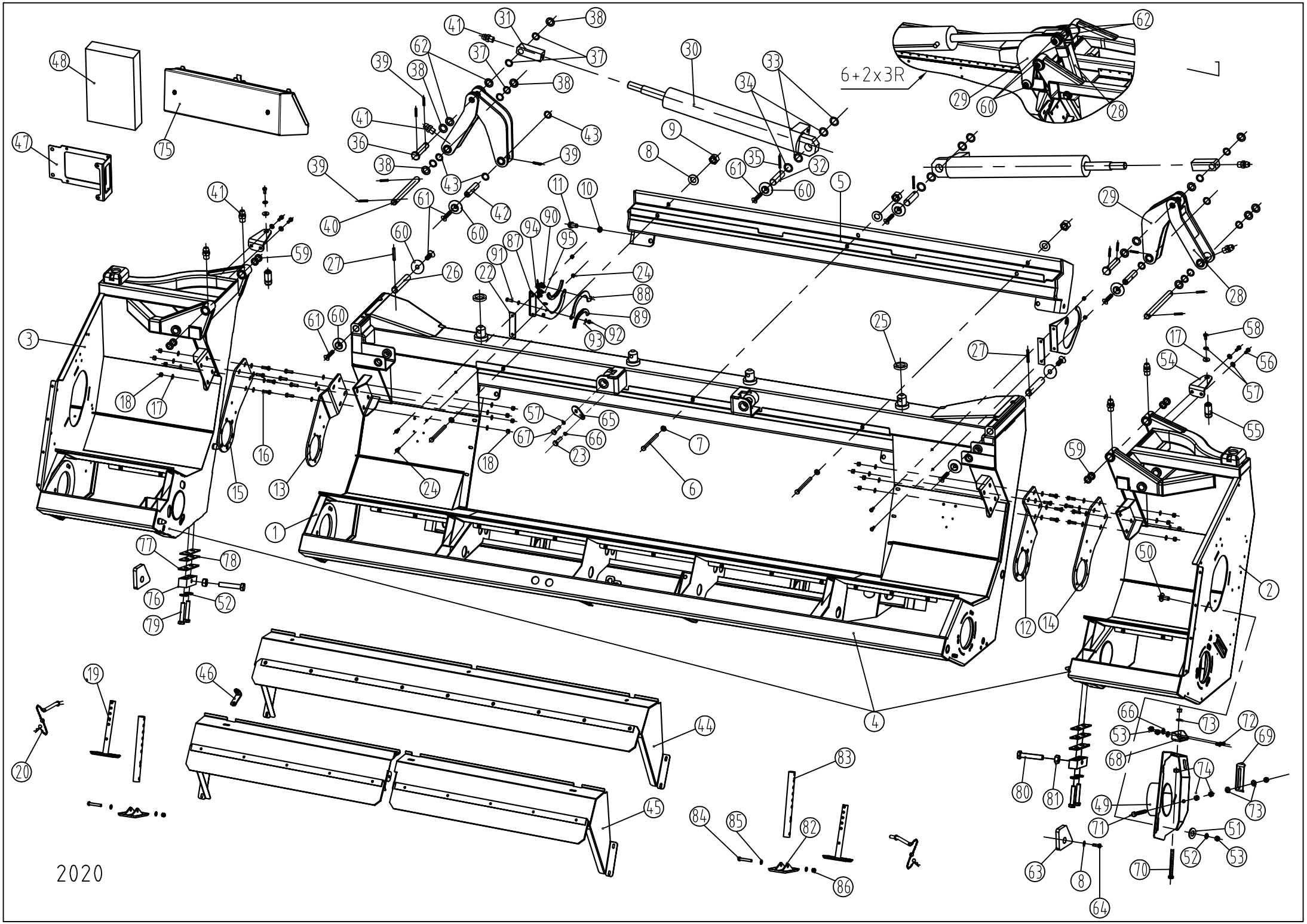
6+2x3R
2020

FRAME ASSEMBLY - FOLDING

Ref.	Part Number	Description		4+2R 76.2cm	4+2R 70cm	4+2R 80cm	4+2x2R 70cm	4+2x2R 76.2cm	4+2x2R 80cm	5+2R 60 cm	5+2x2R 60 cm	5+2x2R 76.2cm	6+2x3R 70cm	6+2x3R 76.2cm
1.	1.376.292	Central frame assy	→2009	1	-	-	-	1	-	-	-	-	-	-
1.	1.377.905	Central frame assy	2010-2015	1	-	-	-	1	-	-	-	-	-	-
1.	1.373.662	Central frame assy	2016→	1	-	-		1	-	-	-	-	-	-
1.	1.377.108	Central frame assy	→2014	-	1	-	-	-	-	-	-	-	-	-
1.	1.379.956	Central frame assy	2015→	-	1	-	1	-	-	-	-	-	-	-
1	1.373.511	Central frame assy		-	-	1	-	-	1	-	-	-	-	-
1.	1.376.633	Central frame assy	→2009	-	-	-	-	-	-	-	-	-	-	1
1.	1.378.179	Central frame assy	2010-2015	-	-	-	-	-	-	-	-	-	-	1
1.	1.373.778	Central frame assy	2016→	-	-	-	-	-	-	-	-	-	-	1
1.	1.377.489	Central frame assy	→2009	-	-	-	-	-	-	-	-	1	-	-
1.	1.378.076	Central frame assy	2010→	-	-	-	-	-	-	-	-	1	-	-
1.	1.373.827	Central frame assy		-	-	-	-	-	-	-	-	-	1	-
1.	1.373.434	Central frame assy		-	-	-	-	-	-	1	1	-	-	-
2.	1.376.293	Extension frame assy - LH	→2008	1	1	-	-	-	-	-	-	-	-	-
2.	1.377.595	Extension frame assy - LH	→2009	1	1	-	-	-	-	-	-	-	-	-
2.	1.378.105	Extension frame assy - LH	2010-2015	1	-	-	-	-	-	-	-	-	-	-
2.	1.379.957	Extension frame assy - LH	2015→	-	1	-	-	-	-	-	-	-	-	-
2.	1.379.957	Extension frame assy - LH	2016→	1	-	1	-	-	-	1	-	-	-	-
2.	1.373.355	Extension frame assy - LH		-	-	-	1	-	-	-	-	-	-	-
2.	1.376.295	Extension frame assy - LH	→2008	-	-	-	-	1	-	-	-	-	-	-
2.	1.377.626	Extension frame assy - LH	→2009	-	-	-	-	1	-	-	-	1	-	-
2.	1.377.991	Extension frame assy - LH	2010-2015	-	-	-	-	1	-	-	-	1	-	-
2.	1.373.512	Extension frame assy - LH	2016→	-	-	-	-	1	1	-	-	-	-	-
2.	1.376.634	Extension frame assy - LH	→2009	-	-	-	-	-	-	-	-	-	-	1
2.	1.378.226	Extension frame assy - LH	2010-2015	-	-	-	-	-	-	-	-	-	-	1
2.	1.373.779	Extension frame assy - LH	2016→	-	-	-	-	-	-	-	-	-	-	1
2.	1.373.828	Extension frame assy - LH		-	-	-	-	-	-	-	-	-	1	-
2.	1.372.063	Extension frame assy - LH		-	-	-	-	-	-	-	1	-	-	-
3.	1.376.294	Extension frame assy - RH	→2008	1	1	-	-	-	-	-	-	-	-	-
3.	1.377.596	Extension frame assy - RH	→2009	1	1	-	-	-	-	-	-	-	-	-
3.	1.378.106	Extension frame assy - RH	2010-2015	1	-	-	-	-	-	-	-	-	-	-
3.	1.379.958	Extension frame assy - RH	2015→	-	1	-	-	-	-	-	-	-	-	-
3.	1.379.958	Extension frame assy - RH	2016→	1	-	1	-	-	-	-	-	-	-	-
3.	1.373.356	Extension frame assy - RH		-	-	-	1	-	-	-	-	-	-	-
3.	1.376.296	Extension frame assy - RH	→2008	-	-	-	-	1	-	-	-	-	-	-
3.	1.377.627	Extension frame assy - RH	→2009	-	-	-	-	1	-	-	-	1	-	-
3.	1.377.992	Extension frame assy - RH	2010-2015	-	-	-	-	1	-	-	-	1	-	-
3.	1.373.513	Extension frame assy - RH	2016→	-	-	-	-	1	1	-	-	-	-	-
3.	1.376.635	Extension frame assy - RH	→2009	-	-	-	-	-	-	-	-	-	-	1
3.	1.378.227	Extension frame assy - RH	2010→	-	-	-	-	-	-	-	-	-	-	1
3.	1.373.780	Extension frame assy - RH	2016→	-	-	-	-	-	-	-	-	-	-	1
3.	1.373.829	Extension frame assy - RH		-	-	-	-	-	-	-	-	-	1	-
3.	1.372.057	Extension frame assy - RH		-	-	-	-	-	-	1	-	-	-	-
3.	1.372.064	Extension frame assy - RH		-	-	-	-	-	-	-	1	-	-	-
4.	1.376.484	Frame assy - complete	→2009	1	-	-	-	-	-	-	-	-	-	-
4.	1.378.098	Frame assy - complete	2010-2015	1	-	-	-	-	-	-	-	-	-	-
4.	1.373.663	Frame assy - complete	2016→	1	-	-		-	-	-	-	-	-	-
4.	1.377.181	Frame assy - complete	→2014	-	1	-	-	-	-	-	-	-	-	-
4.	1.379.955	Frame assy - complete	2015→	-	1	-	-	-	-	-	-	-	-	-
4.	1.373.724	Frame assy - complete	2016→	-	-	1	-	-	-	-	-	-	-	-
4.	1.373.354	Frame assy - complete		-	-	-	1	-	-	-	-	-	-	-
4.	1.376.485	Frame assy - complete	→2009	-	-	-	-	1	-	-	-	-	-	-
4.	1.378.100	Frame assy - complete	2010-2015	-	-	-	-	1	-	-	-	-	-	-
4.	1.373.664	Frame assy - complete	2016→	-	-	-	-	1	-	-	-	-	-	-
4.	1.373.510	Frame assy - complete		-		-	-	-	1	-	-	-	-	-
4.	1.377.488	Frame assy - complete	→2009	-	-	-	-	-	-	-	-	1	-	-
4.	1.378.173	Frame assy - complete	2010→	-	-	-	-	-	-	-	-	1	-	-
4.	1.376.629	Frame assy - complete	→2009	-	-	-	-	-	-	-	-	-	-	1
4.	1.378.199	Frame assy - complete	2010-2015	-	-	-	-	-	-	-	-	-	-	1
4.	1.373.825	Frame assy - complete	2016→	-	-	-	-	-	-	-	-	-	-	1
4.	1.373.826	Frame assy - complete		-	-	-	-	-	-	-	-	-	1	-
4.	1.373.433	Frame assy - complete		-	-	-	-	-	-	1	-	-	-	-
4.	1.372.062	Frame assy - complete		-	-	-	-	-	-	-	1	-	-	-
5.	1.376.491	Insert assy	→2009	1	1	1	1	1	1	1	1	1	1	1
6.	79312015066	Hex bolt M12x150 - DIN931/8.8	→2009	3	3	3	3	3	3	3	3	3	3	3
7.	71412000060	Washer M12 - DIN125 - 200HV	→2009	3	3	6	3	3	3	3	3	3	3	3
8.	91623938961	Spring washer- A12	→2009	5	5	5	5	5	5	5	5	5	5	5
9.	73512000066	Hex nut M12 - DIN934	→2009	3	3	3	3	3	3	3	3	3	3	3
10.	91623939161	Spring washer- A16	→2009	2	2	2	2	2	2	2	2	2	2	2
11.	79416003566	Hex bolt M16x35 - DIN933/8.8	→2009	2	2	2	2	2	2	2	2	2	2	2
12.	1.376.371	Console - LH		1	1	1	1	1	1	1	1	1	1	1
13.	1.376.372	Console - RH		1	1	1	1	1	1	1	1	1	1	1
14.	1.376.373	Console - LH		1	1	1	1	1	1	1	1	1	1	1
15.	1.376.374	Console - RH		1	1	1	1	1	1	1	1	1	1	1
16.	79410003066	Hex bolt M10x30 - DIN933/8.8		16	16	16	16	16	16	16	16	16	16	16
17.	96702375920	Washer - M10		34	34	34	34	34	34	34	34	34	34	34
18.	70710000066	Lock nut M10 - DIN980		16	16	16	16	16	16	16	16	16	16	16

Note: Items 5 - 11 are not needed for New Holland adaptation.
Items 54 - 58 are needed only for exterior drive with lower position.
Application of shims if necessary.
2016-> : only for machines with higher serial number than xxxxx16xxx
* Order items 87-95 (1.372.906) instead of item 21.
* Order new item (1.372.872) instead of item 19.

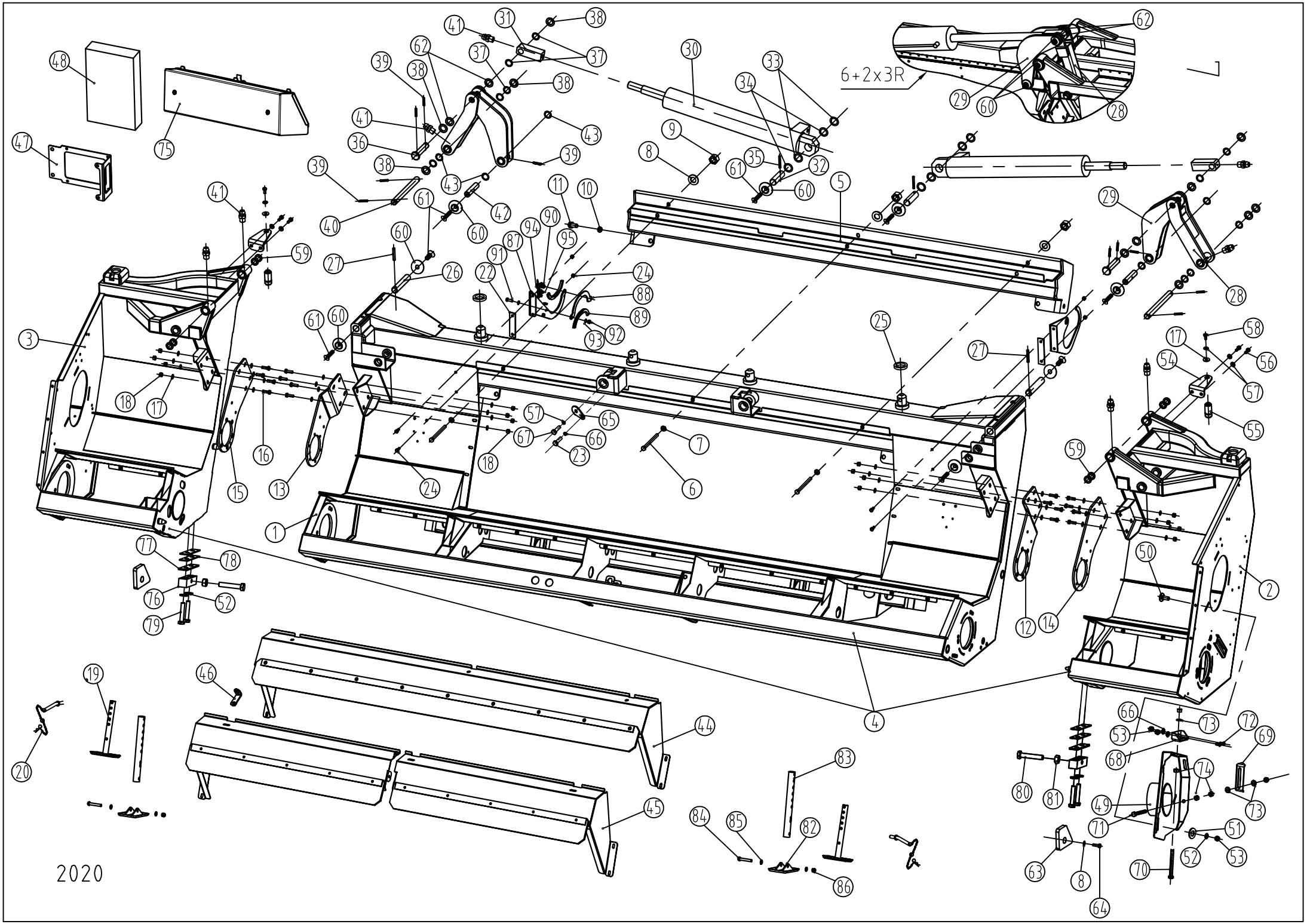
6+2x3R
2020

FRAME ASSEMBLY - FOLDING

Ref.	Part Number	Description		4+2R 76.2cm	4+2R 70cm	4+2R 80cm	4+2x2R 70cm	4+2x2R 76.2cm	4+2x2R 80cm	5+2R 60 cm	5+2x2R 60 cm	5+2x2R 76.2cm	6+2x3R 70cm	6+2x3R 76.2cm
19.	1.372.872	Support assy (items 82-86)	2020→	2	2	2	2	2	2	2	2	2	2	2
19.	1.352.495	Support assy	→2019	2	2	2	2	2	2	2	2	2	2	2
19.	1.377.171	Support assy	→2014	-	2		-	-	-	-	-	-	-	-
20.	1.378.446	Pin assembly		2	2	2	2	2	2	2	2	2	2	2
21.	1.354.037	PTO shaft support	→2019	-	-	-	-	-	-	-	-	2	2	2
22.	1.322.037	Flat		-	-	-	-	-	-	-	-	2	2	2
23.	79408002066	Hex bolt M8x20 - DIN933/8.8		-	-	-	-	-	-	-	-	4	4	4
24.	70708000066	Lock nut M8 - DIN980		-	-	-	-	-	-	-	-	4	4	4
25.	1.376.448	Rubber washer		2	2	2	2	2	2	2	2	2	2	2
26.	1.376.561	Pin l=150	→2009	4	4	4	4	4	4	4	4	4	4	4
26.	1.378.126	Pin l=472	2010→	2	2	2	2	2	2	2	2	2	2	2
27.	73010006001	Spring pin 10x60 - DIN1481	→2009	4	4	4	4	4	4	4	4	4	4	4
27.	73006006001	Spring pin 6x60 - DIN1481	→2009	4	4	4	4	4	4	4	4	4	4	4
28.	1.376.385	Arm		2	2	2	-	-	-	-	-	-	-	-
28.	1.375.138	Arm		-	-	-	2	2	2	2	2	2	2	2
29.	1.376.382	Arm		2	2	2	-	-	-	-	-	-	-	-
29.	1.375.134	Arm		-	-	-	2	2	2	2	2	2	-	-
29.	1.378.409	Arm - LH		-	-	-	-	-	-	-	-	-	1	1
29.	1.378.410	Arm - RH		-	-	-	-	-	-	-	-	-	1	1
30.	1.376.278	Hydraulic cylinder		2	2	2	-	-	-	-	-	-		-
30.	1.375.144	Hydraulic cylinder		-	-	-	2	2	2	2	2	2	2	2
30.	1.378.415	Hydraulic cylinder	2011→	-	-	-	-	-	-	-	-	-	2	2
31.	1.376.573	Fitting		2	2	2	2	2	2	2	2	2	-	-
31.	1.375.180	Fitting	→2008	-	-	-	2	2	2	2	2	-	2	2
31.	1.378.475	Fitting	2011→	-	-	-	-	-	-	-	-	-	2	2
32.	1.375.182	Pin	→2009	2	2	2	2	2	2	2	2	2	2	2
32.	1.378.389	Pin	2010→	2	2	2	2	2	2	2	2	2	2	2
32.	1.375.182	Pin	2011→	2	2	2	2	2	2	2	2	2	2	2
33.	71630042050	Shim 30x42x0.5 - DIN988		4	4	4	4	4	4	4	4	4	4	4
34.	71630042100	Shim 30x42x1 - DIN988		4	4	4	4	4	4	4	4	4	4	4
35.	73008006001	Spring pin 8x60 - DIN1481		2	2	2	2	2	2	2	2	2	2	2
36.	1.375.192	Pin	→2007, 2018->	2	-	-	2	2	2	2	2	-	2	2
36.	1.377.100	Pin	2008-2017	2	2	2	2	2	2	2	2	2	2	2
36.	1.378.411	Pin	2011→	-	-	-	-	-	-	-	-	-	2	2
37.	71625035100	Shim 25x35x1 - DIN988		8	8	8	8	8	8	8	8	8	8	8
38.	1.375.181	Washer	→2017	6	6	6	6	6	6	6	6	6	6	4
38.	71400240060	Washer M24 - DIN125 - 200HV	2018→	8	8	8	8	8	8	8	8	8	8	6
39.	73008004006	Spring pin 8x40 - DIN1481		10	10	10	10	10	10	10	10	10	10	8
40.	1.376.565	Pin		2	2	2	2	2	2	2	2	2	2	2
41.	70006001062	Grease nipple M6x1		8	8	8	8	8	8	8	8	8	8	8
42.	1.376.564	Pin		2	2	2	2	2	2	2	2	2	-	-
42.	1.378.403	Pin	2011→	-	-	-	-	-	-	-	-	-	2	2
43.	71625035050	Shim 25x35x0.5 - DIN988		8	8	8	8	8	8	8	8	8	8	8
44.	1.377.000	Hood assy	→2008	1	1	1	-	1	-	-	-	-	-	-
44.	1.377.470	Hood assy	→2009	1	1	1	-	1	-	-	-	1	-	-
44.	1.378.282	Hood assy	2010	1	1	1	-	1	-	-	-	1	-	-
44.	1.378.685	Hood assy	2011-2015	1	1	1	-	1	-	-	-	1	-	-
44.	1.379.440	Hood assy	2015→	1	1	1	1	1	1	1	1	-	-	-
45.	1.377.409	Hood assy - LH	→2008	-	-	-	-	-	-	-	-	-	1	1
45.	1.377.478	Hood assy - LH	→2009	-	-	-	-	-	-	-	-	-	1	1
45.	1.378.286	Hood assy - LH	2010	-	-	-	-	-	-	-	-	-	1	1
45.	1.378.689	Hood assy - LH	2011-2014	-	-	-	-	-	-	-	-	-	1	1
45.	1.372.231	Hood assy - LH	2016→	-	-	-	-	-	-	-	-	-	1	1
45.	1.377.410	Hood assy - RH	→2008	-	-	-	-	-	-	-	-	-	1	1
45.	1.377.479	Hood assy - RH	→2009	-	-	-	-	-	-	-	-	-	1	1
45.	1.378.287	Hood assy - RH	2010	-	-	-	-	-	-	-	-	-	1	1
45.	1.378.690	Hood assy - RH	2011-2014	-	-	-	-	-	-	-	-	-	1	1
45.	1.372.232	Hood assy - RH	2016→	-	-	-	-	-	-	-	-	-	1	1
46.	1.377.005	Supporting angle	→2008	3	3	3	3	3	3	-	-	-	3	3
47.	1.377.222	Bracket	2008→	1	1	-	-	-	-	-	-	-	-	-
47.	1.379.141	Bracket	2013→	1	-	-	-	1	-	-	-	-	-	-
48.	1.329.720	Storage container	2008-2016	1	1	1	1	1	1	1	1	1	1	1
48.	1.373.751	Storage container	2017→	1	1	1	1	1	1	1	1	1	1	1
49.	1.377.453	Bracket welded - LH	2009→	1	1	1	1	1	1	1	1	1	1	1
49.	1.377.454	Bracket welded - RH	2009→	1	1	1	1	1	1	1	1	1	1	1
50.	76308002066	Carriage bolt M8x20 - DIN603/8.8	2009→	6	6	6	6	6	6	6	6	6	6	6
51.	1.314.099	Washer	2009→	6	6	6	6	6	6	6	6	6	6	6
52.	91623938761	Spring washer A8	2009→	10	10	10	10	10	10	10	10	10	10	10
53.	73508000066	Hex nut M8 - DIN934	2009→	14	14	14	14	14	14	14	14	14	14	14
54.	1.377.102	Holder- JD,MF,CNH, Gleaner		2	2	2	2	2	2	2	2	-	-	-
54.	1.379.299	Holder - Lexion		2	2	2	2	2	2	2	2	-	-	-
55.	1.319.455	Pin - JD,MF, Gleaner, Lexion		2	2	2	2	2	2	2	2	-	-	-
55.	1.318.338	Pin - CNH		2	2	2	2	2	2	2	2	-	-	-
55.	1.373.742	Pin - IHC		2	2	2	2	2	2	2	2	-	-	-

Note: Items 5 - 11 are not needed for New Holland adaptation.
Items 54 - 58 are needed only for exterior drive with lower position.
Application of shims if necessary.
2016-> : only for machines with higher serial number than xxxxx16xxx
* Order items 87-95 (1.372.906) instead of item 21.
* Order new item (1.372.872) instead of item 19.

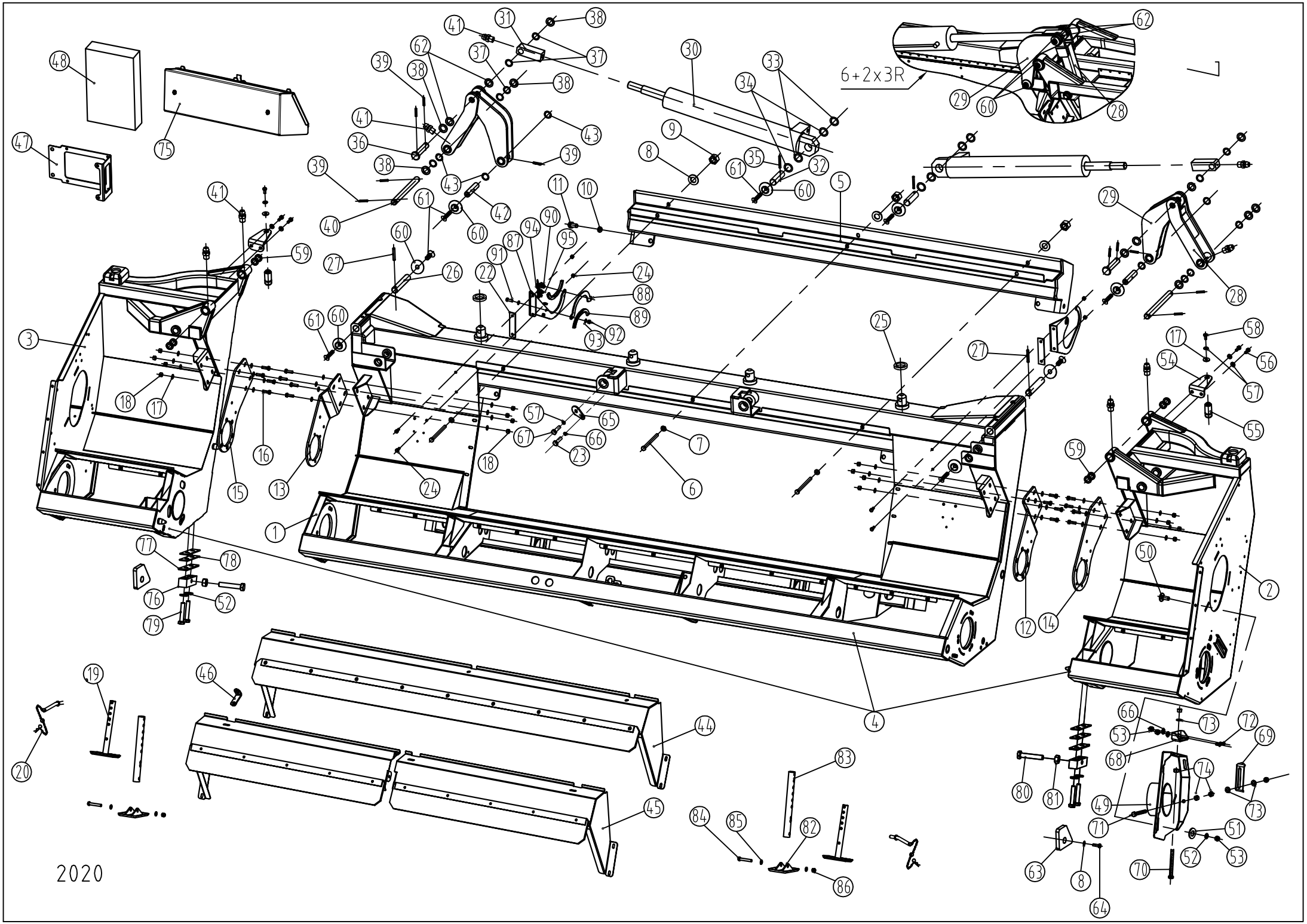
6+2x3R
2020

FRAME ASSEMBLY - FOLDING

Ref.	Part Number	Description		4+2R 76.2cm	4+2R 70cm	4+2R 80cm	4+2x2R 70cm	4+2x2R 76.2cm	4+2x2R 80cm	5+2R 60 cm	5+2x2R 60 cm	5+2x2R 76.2cm	6+2x3R 70cm	6+2x3R 76.2cm
56.	79410002566	Hex bolt M10x25 - DIN933/8.8		4	4	4	4	4	4	4	4	-	-	-
57.	91623938861	Spring washer A10		6	8	8	8	6	6	6	6	-	-	-
58.	79410002066	Hex bolt M10x20 - DIN933/8.8		2	2	2	2	2	2	2	2	-	-	-
59.	97909349340	Bushing 40x44x30	2010→	8	8	8	8	8	8	8	8	8	8	8
60.	1.375.019	Washer	2010→	6	6	6	6	6	6	6	6	6	12	12
61.	80401002563	TORX socket countersunk-head bolt M10x25 - DIN7991/10.9	2010→	6	6	6	6	6	6	6	6	6	12	12
-	Loctite 243	Threadlocking agent												
62.	1.378.407	Spacer	2011→	-	-	-	-	-	-	-	-	-	4	4
63.	1.378.679	Plate	2011→	2	2	2	2	2	2	2	2	2	2	2
64.	79412004566	Hex bolt M 12x45 - DIN933/8.8	2011→	2	2	2	2	2	2	2	2	2	2	2
65.	1.373.586	Retainer		-	2	-	2	-	-	2	2	-	-	-
66.	91623938761	Spring washer A8		8	10	8	10	8	8	10	10	8	8	8
67.	79410002066	Hex bolt M 10x20 - DIN933/8.8		-	2	-	2	-	-	2	2	-	-	-
68.	1.377.460	Bracket - LH	2016→	2	2	2	2	2	2	2	2	2	2	2
69.	1.377.461	Bracket - RH	2016→	2	2	2	2	2	2	2	2	2	2	2
70.	79412012066	Hex bolt M12x120 - DIN933/8.8	2016→	4	4	4	4	4	4	4	4	4	4	4
71.	79412009066	Hex bolt M12x90 - DIN933/8.8	2016→	4	4	4	4	4	4	4	4	4	4	4
72.	78200802063	Hex socket button-head torx bolt M8x20-ISO7380/10.9	2016→	8	8	8	8	8	8	8	8	8	8	8
73.	71412000060	Washer M12 - DIN125 - 200HV	2016→	6	6	6	6	6	6	6	6	6	6	6
74.	73512000066	Hex nut M12 - DIN934	2016→	10	10	10	10	10	10	10	10	10	10	10
75.	1.379.246	Toolbox		1	1	1	1	1	1	1	1	1	1	1
76.	1.372.537	Stand		2	2	2	2	2	2	2	2	2	2	2
77.	1.372.538	Shim 3 mm		2	2	2	2	2	2	2	2	2	2	2
78.	1.372.539	Shim 2 mm		4	4	4	4	4	4	4	4	4	4	4
79.	79408004566	Hex bolt M8x45 - DIN933/8.8		4	4	4	4	4	4	4	4	4	4	4
80.	79410005566	Hex bolt M10x55 - DIN933/8.8		2	2	2	2	2	2	2	2	2	2	2
81.	73510000066	Hex nut M10 - DIN934		2	2	2	2	2	2	2	2	2	2	2
82.	1.372.873	Stand	2020→	2	2	2	2	2	2	2	2	2	2	2
83.	1.372.874	Support tube	2020→	2	2	2	2	2	2	2	2	2	2	2
84.	79316010066	Hex head screw - M16X100 DIN 933	2020→	2	2	2	2	2	2	2	2	2	2	2
85.	71416000060	Washer M16 - DIN125 - 200HV	2020→	4	4	4	4	4	4	4	4	4	4	4
86.	74901600066	Hex nut - plastic insert M16 - DIN 982	2020→	2	2	2	2	2	2	2	2	2	2	2
87.	1.372.907	PTO shaft support	2020→	-	-	-	-	-	-	-	-	2	2	2
88.	1.372.908	Locking plate	2020→	-	-	-	-	-	-	-	-	2	2	2
89.	96720070601	Rubber protector - 155 mm	2020→	-	-	-	-	-	-	-	-	4	4	4
90.	96716002720	Lynch pin 6x27 DIN1382	2020→	-	-	-	-	-	-	-	-	2	2	2
91.	79408002566	Hex bolt M8x25 - DIN933/8.8	2020→	-	-	-	-	-	-	-	-	2	2	2
92.	74908000066	Hex nut - plastic insert M8 - DIN982	2020→	-	-	-	-	-	-	-	-	2	2	2
93.	71408000060	Washer M8 - DIN125 - 200HV	2020→	-	-	-	-	-	-	-	-	4	4	4
94.	84500000016	Chain	2020→	-	-	-	-	-	-	-	-	2	2	2
95.	67210000011	Key ring d=25	2020→	-	-	-	-	-	-	-	-	2	2	2

Note: Items 5 - 11 are not needed for New Holland adaptation.
Items 54 - 58 are needed only for exterior drive with lower position.
Application of shims if necessary.
2016-> : only for machines with higher serial number than xxxxx16xxx
* Order items 87-95 (1.372.906) instead of item 21.
* Order new item (1.372.872) instead of item 19.

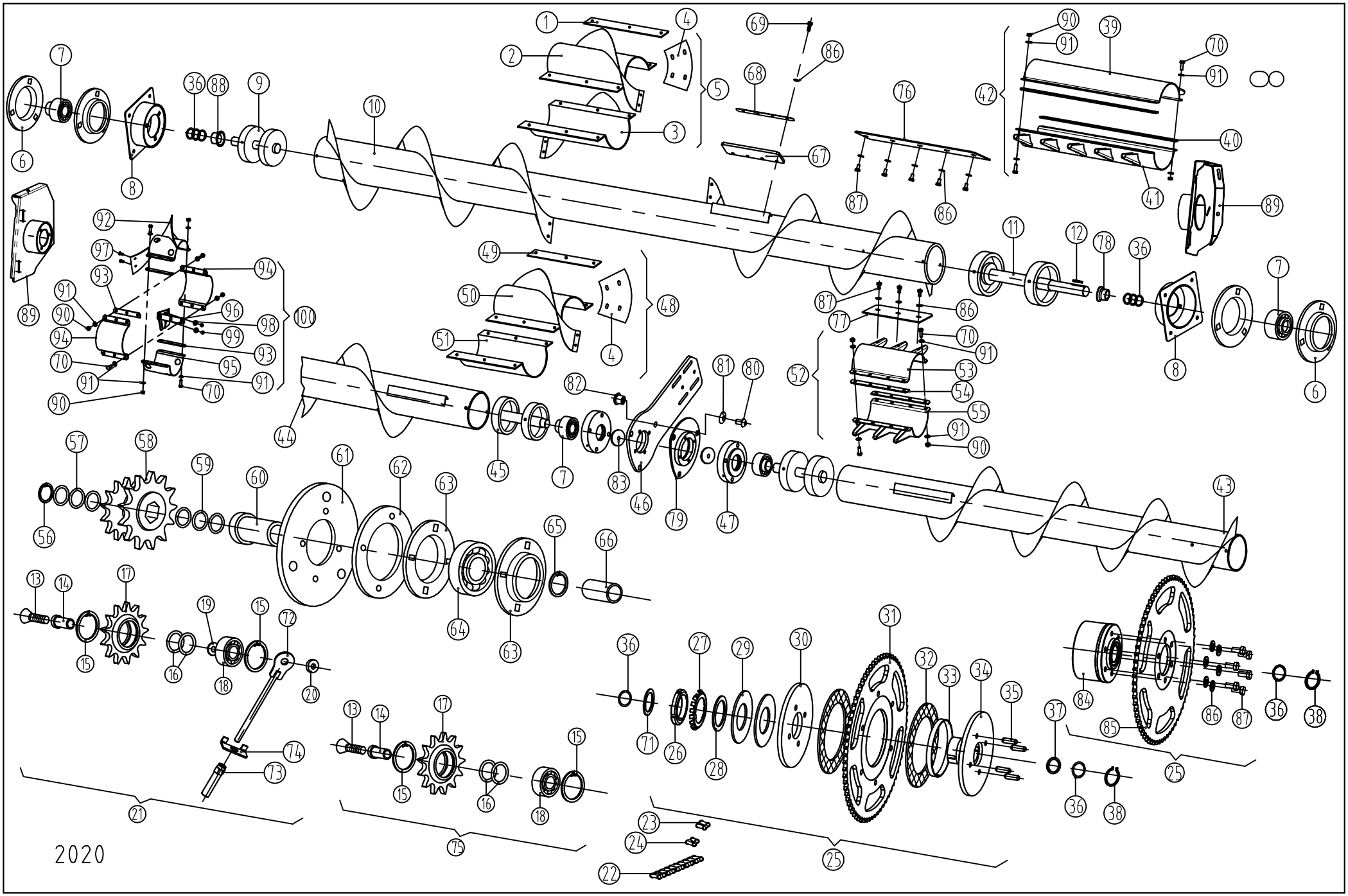
2020

AUGER ASSEMBLY - RIGID

Ref.	Part Number	Description		6 row 70cm	6 row 76.2cm	8 row 50cm	8 row 56cm	8 row 70cm	8 row 76.2cm	8 row 96.5cm	12 row 50cm	12 row 56cm	12 row 70cm	12 row 76.2cm	16 row 76.2cm
1.	1.315.408	Strap		2	2	2	2	2	2	-	2	-	-	-	-
2.	1.353.171	Auger flight extension-LH - 22" pitch	→2007	-	1	1	1	1	1	-	1	-	-	-	-
2.	1.355.448	Auger flight extension-LH - 22" pitch	2008→	1	1	1	1	1	1	-	1	-	-	-	-
3.	1.353.172	Auger flight extension-RH - 22" pitch	→2007	-	1	1	1	1	1	-	1	-	-	-	-
3.	1.355.449	Auger flight extension-RH - 22" pitch	2008→	1	1	1	1	1	1	-	1	-	-	-	-
4.	1.353.560	Plate	→2007	-	2	2	2	2	2	-	2	2	2	2	2
5.	1.353.218	Auger flight extension kit/1+2+3+4/-22"pitch	→2007	-	1	-	-	1	1	-	1	-	-	-	-
5.	1.355.452	Auger flight extension kit/1+2+3+4/-22"pitch	2008→	1	1	1	1	1	1	-	1	-	-	-	-
6.	616.068.0	Bearing housing		4	4	4	4	4	4	4	4	4	4	4	4
7.	87000003556	Y bearing /RAE35 NPPB/238.207		2	2	2	2	2	2	4	2	4	4	4	4
8.	1.375.203	Bracket **(2009→ see pg. 6 item 18)**	→2008	-	2	-	-	2	2	2	2	2	2	2	2
9.	1.318.122	Auger shaft assy		1	1	1	1	1	1	-	1	-	-	-	-
10.	1.376.214	Auger assy - 22" pitch		-	1	-	-	-	-	-	-	-	-	-	-
10.	1.376.215	Auger assy - 22" pitch		-	-	-	-	-	1	-	-	-	-	-	-
10.	1.373.121	Auger assy - 22" pitch	2015→	-	-	1	-	-	-	-	-	-	-	-	-
10.	1.373.088	Auger assy - 22" pitch	2015→	-	-	-	1	-	-	-	-	-	-	-	-
10.	1.376.229	Auger assy - 22" pitch		-	-	-	-	1	-	-	-	-	-	-	-
10.	1.376.228	Auger assy - 22" pitch		1	-	-	-	-	-	-	-	-	-	-	-
10.	1.379.674	Auger assy - 22" pitch	2014→	-	-	-	-	-	-	-	1	-	-	-	-
11.	1.351.349	Auger shaft assy		1	1	1	1	1	1	2	1	2	2	2	2
12.	84210084000	Key B10x8x40		1	1	1	1	1	1	2	1	2	2	2	2
13.	80401004063	Hex socket countersunk-head bolt M10x40 - DIN7991/10.9		2	2	2	2	2	2	4	2	4	4	4	4
14.	1.375.968	Shaft		2	2	2	2	2	2	4	2	4	4	4	4
15.	70100004701	Retaining ring - internal 47x1.75 - DIN472		4	4	4	4	4	4	8	4	8	8	8	8
16.	1.315.070	Shim	→2014	4	4	4	4	4	4	8	4	8	8	8	8
16.	1.373.045	Spacer	2015→	2	2	2	2	2	2	4	2	4	4	4	4
16.	1.373.046	Shim	2015-2018	2	2	2	2	2	2	4	2	4	4	4	4
17.	1.309.052	Idler sprocket 16T		2	2	2	2	2	2	4	2	4	4	4	4
18.	87001620414	Bearing 6204 - 2RS		2	2	2	2	2	2	4	2	4	4	4	4
19.	1.301.433	Washer		1	1	1	1	1	1	2	1	2	2	2	2
20.	1.375.969	Tapped insert		1	1	1	1	1	1	2	1	2	2	2	2
21.	1.376.233	Chain adjuster assy	→2010	1	1	1	1	1	1	2	1	2	2	2	2
21.	1.378.521	Chain adjuster assy	2011→	1	1	1	1	1	1	2	1	2	2	2	2
22.	1.376.238	Chain		1	1	1	1	1	1	2	1	2	2	2	2
22.	1.378.523	Chain 105 pitches	2011→	1	1	1	1	1	1	2	1	2	2	2	2
23.	1.320.493	Connector link		1	1	1	1	1	1	2	1	2	2	2	2
24.	1.320.492	Half link		1	1	1	1	1	1	2	1	2	2	2	2
24.	1.320.492	Half link	2011→	-	-	-	-	-	-	-	-	-	-	-	-
25.	1.376.232	Sprocket assy - 70T	→2014	1	1	1	1	1	1	2	1	2	2	2	2
25.	1.377.272	Sprocket assy - 70T	2015→	1	1	1	1	1	1	2	1	2	2	2	2
26.	86700001100	Bearing nut - KM11		1	1	1	1	1	1	2	1	2	2	2	2
27.	86801100000	Retainer ring - MB-11		1	1	1	1	1	1	2	1	2	2	2	2
28.	1.375.430	Washer		1	1	1	1	1	1	2	1	2	2	2	2
29.	96700000112	Disk spring B112 - DIN2093		2	2	2	2	2	2	4	2	4	4	4	4
30.	1.375.428	Plate		1	1	1	1	1	1	2	1	2	2	2	2
31.	1.375.431	Sprocket 70T (5/8)		1	1	1	1	1	1	2	1	2	2	2	2
32.	25553201007	Friction disk		2	2	2	2	2	2	4	2	4	4	4	4
33.	1.310.780	Ring		1	1	1	1	1	1	2	1	2	2	2	2
34.	1.375.429	Hub		1	1	1	1	1	1	2	1	2	2	2	2
35.	1.376.020	Pin		4	4	4	4	4	4	8	4	8	8	8	8
36.	1.309.011	Shim		10	10	10	10	10	10	20	10	20	20	20	20
37.	1.320.540	Shim	→2014	1	1	1	1	1	1	2	1	2	2	2	2
38.	70200003501	Retaining ring - external 35x1.5 - DIN471		1	1	1	1	1	1	2	1	2	2	2	2
39.	1.304.770	Auger finger		1	1	1	1	1	1	-	1	-	-	-	-
40.	1.304.876	Strap		2	2	2	2	2	2	-	2	-	-	-	-
41.	1.304.769	Auger finger		1	1	1	1	1	1	-	1	-	-	-	-
42.	1.304.935	Spike tooth kit		1	1	1	1	1	1	-	1	-	-	-	-
43.	1.376.216	Auger - LH wing		-	-	-	-	-	-	-	-	-	-	1	-
43.	1.376.230	Auger - LH wing		-	-	-	-	-	-	-	-	-	1	-	-
43.	1.379.636	Auger - LH wing	2014→	-	-	-	-	-	-	-	-	1	-	-	-
43.	1.379.084	Auger - LH wing	2013→	-	-	-	-	-	-	-	-	-	-	-	1
43.	1.372.749	Auger - LH wing		-	-	-	-	-	-	1	-	-	-	-	-
44.	1.376.217	Auger - RH wing		-	-	-	-	-	-	-	-	-	-	1	-
44.	1.376.231	Auger - RH wing		-	-	-	-	-	-	-	-	-	1	-	-
44.	1.379.637	Auger - RH wing	2014→	-	-	-	-	-	-	-	-	1	-	-	-
44.	1.379.087	Auger - RH wing	2013→	-	-	-	-	-	-	-	-	-	-	-	1
44.	1.372.750	Auger - RH wing		-	-	-	-	-	-	1	-	-	-	-	-
45.	1.304.893	Auger shaft assy		-	-	-	-	-	-	2	-	2	2	2	2
46.	1.376.241	Console	→2013	-	-	-	-	-	-	1	-	1	1	1	1
46.	1.379.543	Console	2014→	-	-	-	-	-	-	1	-	1	1	1	1
47.	676.304	Bearing housing		-	-	-	-	-	-	2	-	2	2	2	2
48.	1.353.572	Auger flight extension kit - pitch 22"	→2007	-	-	-	-	-	-	-	-	1	1	1	1
48.	1.355.468	Auger flight extension kit - pitch 22"	2008→	-	-	-	-	-	-	-	-	1	1	1	1
49.	1.353.573	Strap		-	-	-	-	-	-	-	-	4	4	4	4
50.	1.353.567	Auger flight extension-LH - pitch 22"	→2007	-	-	-	-	-	-	-	-	1	1	1	1
50.	1.355.464	Auger flight extension-LH - pitch 22"	2008→	-	-	-	-	-	-	-	-	1	1	1	1
50.	1.353.568	Auger flight extension-RH - pitch 22"	→2007	-	-	-	-	-	-	-	-	1	1	1	1
50.	1.355.465	Auger flight extension-RH - pitch 22"	2008→	-	-	-	-	-	-	-	-	1	1	1	1
51.	1.353.571	Support plate		-	-	-	-	-	-	-	-	2	2	2	2

Note: Application of shims if necessary.
Application of items 67-70 depends on the combine open.
Parts marked with * are optional.

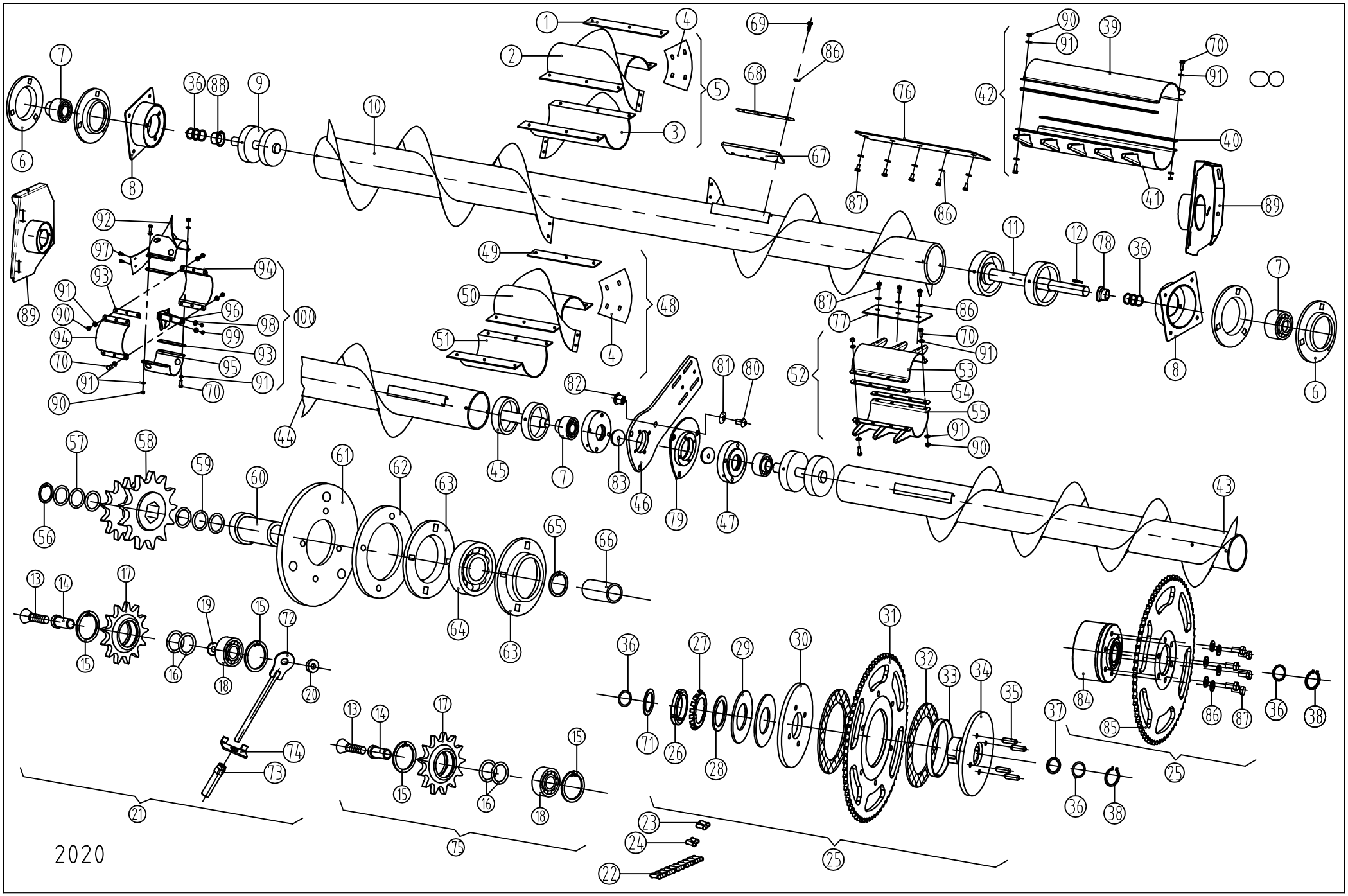
2020

AUGER ASSEMBLY - RIGID

Ref.	Part Number	Description		6 row 70cm	6 row 76.2cm	8 row 50cm	8 row 56cm	8 row 70cm	8 row 76.2cm	8 row 96.5cm	12 row 50cm	12 row 56cm	12 row 70cm	12 row 76.2cm	16 row 76.2cm
52.	1.353.578	Spike tooth kit	→2013	-	-	-	-	-	-	1	-	1	1	1	1
52.	1.379.629	Spike tooth kit	2014→	-	-	-	-	-	-	1	-	1	1	1	1
53.	1.353.576	Auger finger	→2013	-	-	-	-	-	-	2	-	2	2	2	2
53.	1.379.550	Auger finger	2014→	-	-	-	-	-	-	2	-	2	2	2	2
54.	1.353.577	Strap	→2013	-	-	-	-	-	-	4	-	4	4	4	4
54.	1.379.560	Strap	2014→	-	-	-	-	-	-	4	-	4	4	4	4
55.	1.353.575	Auger finger	→2013	-	-	-	-	-	-	2	-	2	2	2	2
55.	1.379.550	Auger finger	2014→	-	-	-	-	-	-	2	-	2	2	2	2
56.	70200003201	Retaining ring - external 32x1.5 - DIN471		1	1	1	1	1	1	2	1	2	2	2	2
57.	71632045100	Shim 32x45x1 - DIN988		3	3	3	3	3	3	6	3	6	6	6	6
58.*	1.351.355	Sprocket 16T	→2009	1	1	1	1	1	1	2	1	2	2	2	2
58.	1.351.178	Sprocket 18T	→2009	1	1	1	1	1	1	2	1	2	2	2	2
58.*	1.353.616	Sprocket 20T	→2009	1	1	1	1	1	1	2	1	2	2	2	2
58.	1.377.687	Sprocket 16T / 14T	2010→	1	1	1	1	1	1	2	1	2	2	2	2
58.*	1.377.583	Sprocket 18T / 16T	2010→	1	1	1	1	1	1	2	1	2	2	2	2
58.*	1.379.642	Sprocket 20T / 18T	2010→	1	1	1	1	1	1	2	1	2	2	2	2
59.	71637047100	Shim 37x47x1 - DIN988		3	3	3	3	3	3	6	3	6	6	6	6
60.	1.375.967	Shaft		-	-	-	-	-	-	2	-	2	2	2	2
61.	1.375.966	Disk plate		-	-	-	-	-	-	2	-	2	2	2	2
62.	1.375.965	Washer		-	-	-	-	-	-	2	-	2	2	2	2
63.	87300008516	Bearing housing - PF85		-	-	-	-	-	-	2	-	2	2	2	2
64.	87030620914	Y bearing 1726209-2RS1 SKF		-	-	-	-	-	-	2	-	2	2	2	2
65.	70200004501	Retaining ring - external 45x1.75 - DIN471		-	-	-	-	-	-	2	-	2	2	2	2
66.	1.354.565	Spacer (l=76)		1	1	1	1	1	1	-	1	-	-	-	-
67.	1.377.725	Rubber plate	2010-2019.	2	2	2	2	2	2	2	2	2	2	2	2
67.	1.372.944	Rubber plate	2020→	2	2	2	2	2	2	2	2	2	2	2	2
68.	1.377.726	Strap	2010→	2	2	2	2	2	2	2	2	2	2	2	2
69.	79410002566	Hex bolt M10x25 - DIN933/8.8	2010→	8	8	8	8	8	8	8	8	8	8	8	8
70.	79410003066	Hex bolt M10x30 - DIN933/8.8	2010→	12	12	12	12	12	12	40	12	16	16	16	16
71.	1.308.407	Spacer (l=12.5)	2010-2014	1	1	1	1	1	1	2	1	2	2	2	2
72.	1.378.449	Adjuster arm	2011→	1	1	1	1	1	1	2	1	2	2	2	2
73.	1.378.448	Adjuster nut	2011→	1	1	1	1	1	1	2	1	2	2	2	2
74.	1.378.453	Retainer	2011→	1	1	1	1	1	1	2	1	2	2	2	2
75.	1.378.524	Idler sprocket assy	2011→	1	1	1	1	1	1	2	1	2	2	2	2
76.	1.308.132	Cover plate	2011→	2	2	2	2	2	2	-	2	-	-	-	-
77.	1.356.455	Cover plate	→2013	-	-	-	-	-	-	4	-	4	4	4	4
77.	1.379.561	Cover plate	2014→	-	-	-	-	-	-	4	-	4	4	4	4
78.	1.379.476	Thrust sleeve	2014→	1	1	1	1	1	1	1	1	1	1	1	1
79.	1.379.485	Disc welded	2014→	-	-	-	-	-	-	1	-	1	1	1	1
80.	81110001668	Hex socket button-head bolt M10x16	2014→	-	-	-	-	-	-	3	-	3	3	3	3
81.	1.379.488	Washer	2014→	-	-	-	-	-	-	3	-	3	3	3	3
82.	1.379.487	Nut	2014→	-	-	-	-	-	-	3	-	3	3	3	3
83.	665.840.0	Washer	2014→	-	-	-	-	-	-	2	-	2	2	2	2
84.	1.377.164	Safety clutch (Walterscheid)		1	1	1	1	1	1	1	1	1	1	1	1
85.	1.377.271	Sprocket		1	1	1	1	1	1	1	1	1	1	1	1
86.	91623938861	Spring washer A10		24	24	24	24	24	24	24	24	26	26	26	26
87.	79410002066	Hex bolt M10x20 - DIN933/8.8		16	16	16	16	16	16	18	16	18	18	18	18
88.	1.379.476	Thrust sleeve	2015→	-	-	-	-	-	-	1	-	1	1	1	1
88.	96701320540	Spacer	2015-2018.	1	1	1	1	1	1	-	1	-	-	-	-
89.	1.377.453	Bracket welded - LH		1	1	1	1	1	1	1	1	1	1	1	1
89.	1.377.454	Bracket welded - RH		1	1	1	1	1	1	1	1	1	1	1	1
90.	70710000066	M10 DIN980/8.8 Hex nut		12	12	12	12	12	12	40	12	16	16	16	16
91.	71410000060	Washer M10 - DIN125		24	24	24	24	24	24	80	24	32	32	32	32
92.	1.372.927	Auger flight extension-LH - pitch 22"		-	-	-	-	-	-	1	-	-	-	-	-
92.	1.372.928	Auger flight extension-RH - pitch 22"		-	-	-	-	-	-	1	-	-	-	-	-
93.	1.372.926	Strap		-	-	-	-	-	-	6	-	-	-	-	-
94.	1.372.939	Support plate		-	-	-	-	-	-	4	-	-	-	-	-
95.	1.372.920	Support plate - LH		-	-	-	-	-	-	1	-	-	-	-	-
95.	1.372.921	Support plate - RH		-	-	-	-	-	-	1	-	-	-	-	-
96.	1.372.924	Locking plate - LH		-	-	-	-	-	-	1	-	-	-	-	-
96.	1.372.925	Locking plate - RH		-	-	-	-	-	-	1	-	-	-	-	-
97.	78200802563	Hex socket button-head torx bolt M8x25-ISO7380/10.9		-	-	-	-	-	-	4	-	-	-	-	-
98.	1.314.099	Washer		-	-	-	-	-	-	4	-	-	-	-	-
99.	73508000066	Hex nut M8 - DIN934		-	-	-	-	-	-	4	-	-	-	-	-
100.	1.372.929	Auger flight extension kit - pitch 22"		-	-	-	-	-	-	1	-	-	-	-	-

Note: Application of shims if necessary.
Application of items 67-70 depends on the combine open.
Parts marked with * are optional.

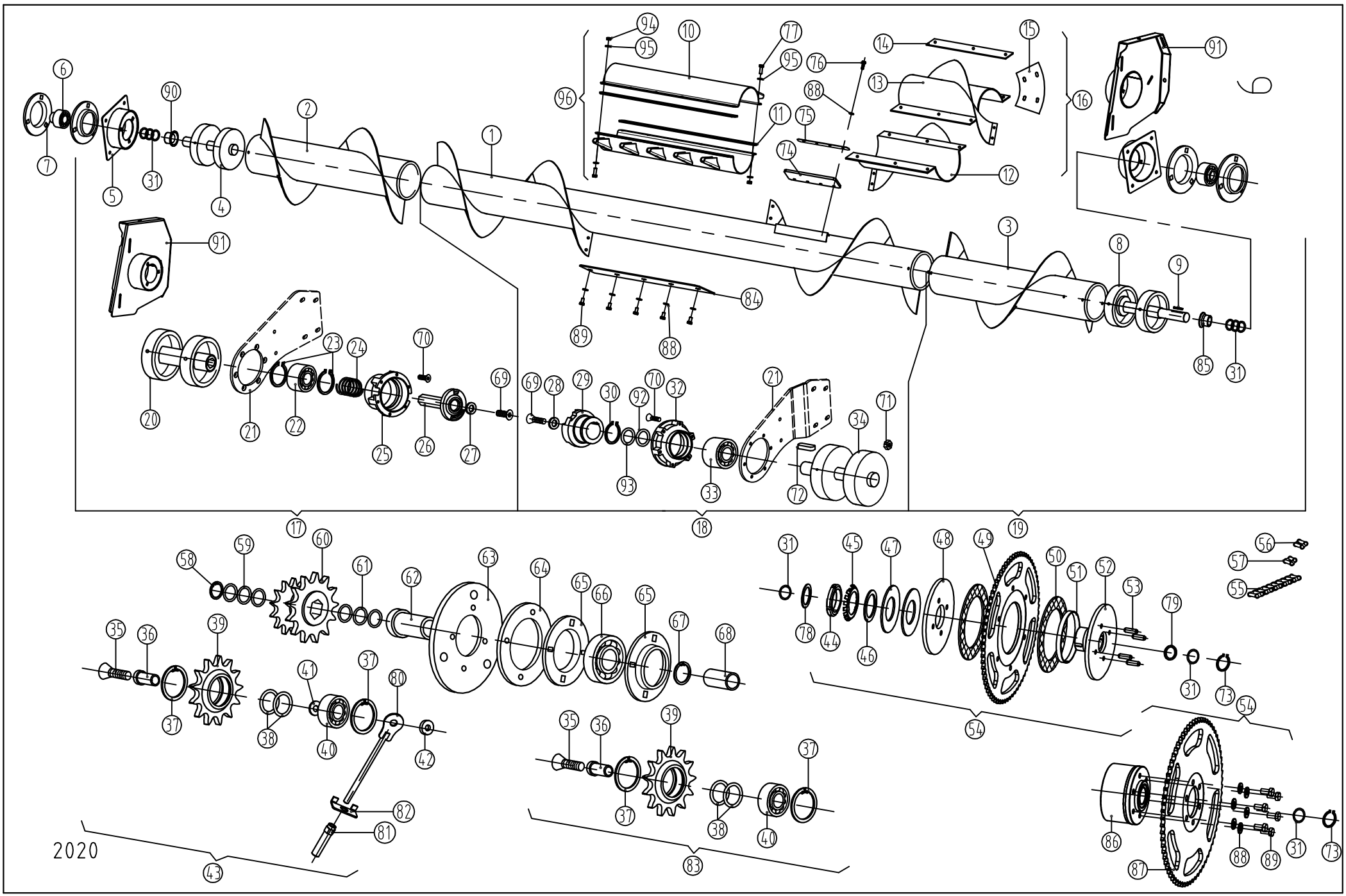
2020

AUGER ASSEMBLY - 4+2R, 4+2x2R, 5+2R, 5+2x2R

Ref.	Part Number	Description		4+2R 70cm	4+2R 76.2cm	4+2R 80cm	4+2x2R 70cm	4+2x2R 76.2cm	4+2x2R 80cm	5+2R 60cm	5+2x2R 60cm	5+2x2R 76.2cm
1.	1.375.913	Auger - central -22" pitch		-	1	-	-	1	-	-	-	-
1.	1.377.119	Auger - central -22" pitch		1	-	-	1	-	-	-	-	-
1.	1.373.555	Auger - central -22" pitch	2015→	-	-	1	-	-	1	-	-	-
1.	1.377.504	Auger - central -22" pitch		-	-	-	-	-	-	-	-	1
1.	1.372.107	Auger - central -22" pitch		-	-	-	-	-	-	1	1	-
2.	1.376.321	Auger - RH wing - 22" pitch		1	1	1	-	-	-	-	-	-
2.	1.373.465	Auger - RH wing - 22" pitch	2015→	-	-	-	1	-	-	-	-	-
2.	1.376.323	Auger - RH wing - 22" pitch		-	-	-	-	1	1	-	-	1
2.	1.372.116	Auger - RH wing - 22" pitch		-	-	-	-	-	-	1	-	-
2.	1.372.114	Auger - RH wing - 22" pitch		-	-	-	-	-	-	-	1	-
3.	1.376.320	Auger - LH wing - 22 "pitch		1	1	1	-	-	-	1	-	-
3.	1.373.464	Auger - LH wing - 22 "pitch	2015→	-	-	-	1	-	-	-	-	-
3.	1.376.322	Auger - LH wing - 22 "pitch		-	-	-	-	1	1	-	-	1
3.	1.372.111	Auger - LH wing - 22 "pitch		-	-	-	-	-	-	-	1	-
4.	1.318.122	Auger shaft assy		1	1	1	1	1	1	1	1	1
5.	1.375.203	Bracket **(2009→ see pg. 6 item 18)**	→2008	2	2	2	2	2	2	2	2	2
6.	87000003556	Y-bearing /RAE35 NPPB/ 238.207		2	2	2	2	2	2	2	2	2
7.	616.068.0	Bearing housing		4	4	4	4	4	4	4	4	4
8.	1.351.349	Auger shaft assy		1	1	1	1	1	1	1	1	1
9.	84210084000	Key B10x8x40		1	1	1	1	1	1	1	1	1
10.	1.304.769	Auger finger - LH		1	1	1	1	1	1	1	1	1
10.	1.304.770	Auger finger - RH		1	1	1	1	1	1	1	1	1
11.	1.304.876	Strap		4	4	2	4	4	2	2	2	4
12.	1.353.172	Support plate - RH	→2007	1	1	1	1	1	1	1	1	1
12.	1.355.449	Support plate - RH	2008→	1	1	1	1	1	1	1	1	1
13.	1.353.171	Support plate - LH	→2007	1	1	1	1	1	1	1	1	1
13.	1.355.448	Support plate - LH	2008→	1	1	1	1	1	1	1	1	1
14.	1.315.408	Strap		4	4	4	4	4	4	4	4	4
15.	1.353.560	Plate	→2007	2	2	2	2	2	2	2	2	2
16.	1.353.218	Auger flight extension kit - 22"pitch	→2007	1	1	1	1	1	1	1	1	1
16.	1.355.452	Auger flight extension kit - 22"pitch	2008→	1	1	1	1	1	1	1	1	1
17.	1.376.363	Auger assy - RH wing - 22"pitch		1	1	1	-	-	-	-	-	-
17.	1.373.463	Auger assy - RH wing - 22"pitch	2015→	-	-	-	1	-	-	-	-	-
17.	1.376.369	Auger assy - RH wing - 22"pitch		-	-	-	-	1	1	-	-	1
17.	1.372.131	Auger assy - RH wing - 22"pitch		-	-	-	-	-	-	1	-	-
17.	1.372.129	Auger assy - RH wing - 22"pitch		-	-	-	-	-	-	-	1	-
18.	1.377.183	Auger assy - central - 22"pitch		1	-	-	1	-	-	-	-	-
18.	1.376.365	Auger assy - central - 22"pitch		-	1	-	-	1	-	-	-	-
18.	1.373.559	Auger assy - central - 22"pitch	2015→	-	-	1	-	-	1	-	-	-
18.	1.377.503	Auger assy - central - 22"pitch		-	-	-	-	-	-	-	-	1
18.	1.372.127	Auger assy - central - 22"pitch		-	-	-	-	-	-	1	1	-
19.	1.376.364	Auger assy - LH wing - 22"pitch		1	1	1	-	-	-	1	-	-
19.	1.373.462	Auger assy - LH wing - 22"pitch	2015→	-	-	-	1	-	-	-	-	
19.	1.376.370	Auger assy - LH wing - 22"pitch		-	-	-	-	1	1	-	-	1
19.	1.372.128	Auger assy - LH wing - 22"pitch		-	-	-	-	-	-	-	1	-
20.	1.328.479	Auger shaft assy		2	2	2	2	2	2	1		2
21.	1.376.371	Console - central frame - LH		1	1	1	1	1	1	1	1	1
21.	1.376.372	Console - central frame - RH		1	1	1	1	1	1	1	1	1
21.	1.376.373	Console - wing LH		1	1	1	1	1	1	1	1	1
21.	1.376.374	Console - wing RH		1	1	1	1	1	1	1	1	1
22.	1.309.259	Bearing - 172 6211-2RS		2	2	2	2	2	2	2	2	2
23.	70200005501	Retaining ring -for shaft 55x2 - DIN471		4	4	4	4	4	4	4	4	4
24.	1.308.932	Spring		2	2	2	2	2	2	2	2	2
25.	1.353.179	Bearing housing		2	2	2	2	2	2	2	2	2
26.	1.328.472	Jaw clutch - outer		2	2	2	2	2	2	2	2	2
27.	1.328.492	Washer		2	2	2	2	2	2	2	2	2
28.	1.308.948	Washer		2	2	2	2	2	2	2	2	2
29.	1.328.473	Jaw cluch - inner		2	2	2	2	2	2	2	2	2
30.	70200004001	Retaining ring -for shaft 40x1.75 - DIN471		2	2	2	2	2	2	2	2	2
31.	1.309.011	Shim		6	6	6	6	6	6	6	6	6
32.	1.353.178	Bearing housing		2	2	2	2	2	2	2	2	2
33.	87000140059	Y-bearing /RAE40 NPPB/		2	2	2	2	2	2	2	2	2
34.	1.308.414	Auger shaft assy		2	2	2	2	2	2	2	2	2
35.	80401004063	Hex socket countersunk-head bolt M10x40 - DIN7991/10.9		1	1	1	1	1	1	1	1	1
36.	1.375.968	Shaft		1	1	1	1	1	1	1	1	1
37.	70100004701	Retaining ring - internal 47x1.75 - DIN472		3	3	3	3	3	3	3	3	3

Note: items 62-67 are only for interior drive, item 68 is only for exterior drive.
Application of shims as necessary.
Application of items 74-77 depends on the combine open.
Parts marked with * are optional.

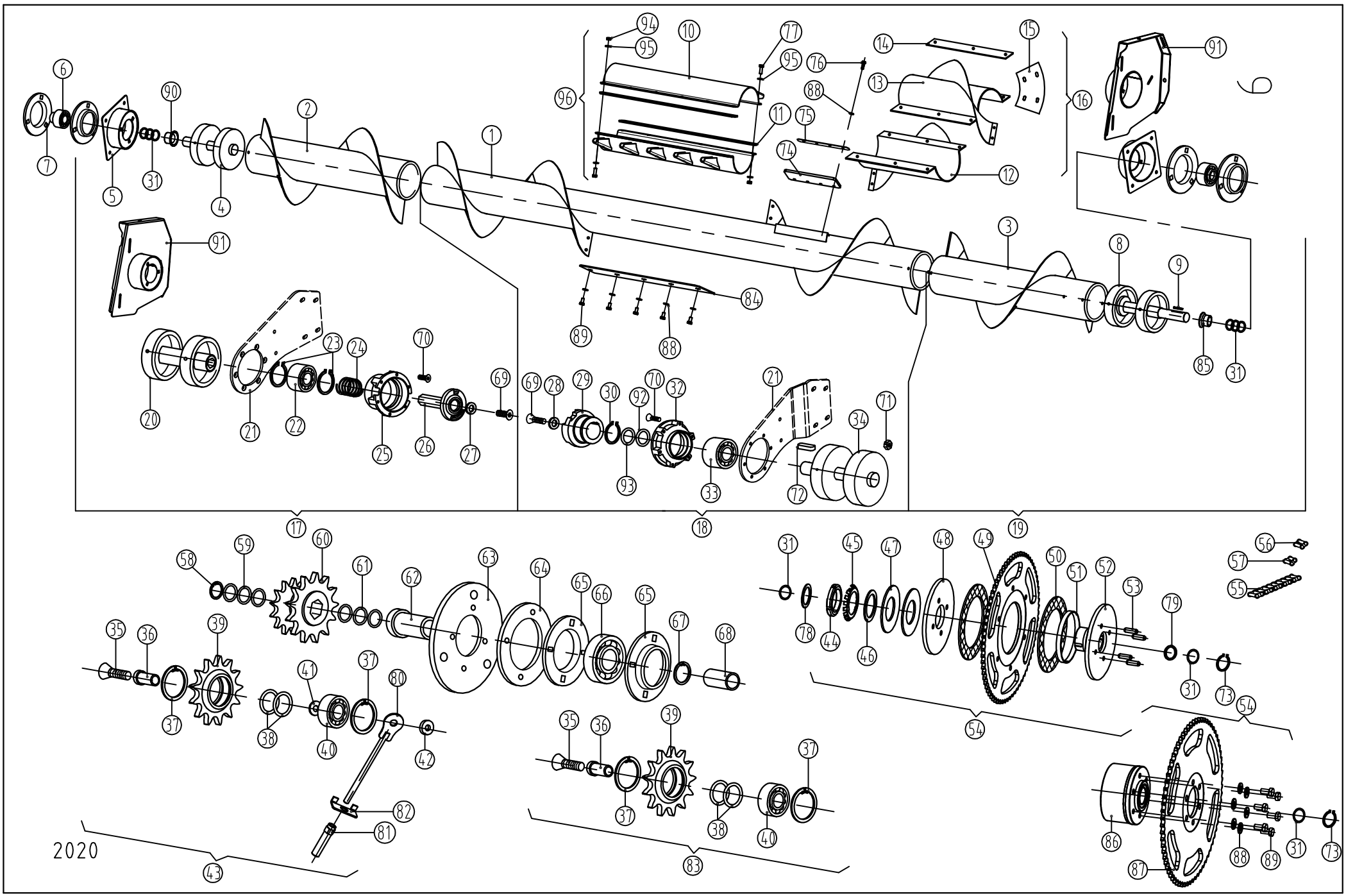
2020

AUGER ASSEMBLY - 4+2R, 4+2x2R, 5+2R, 5+2x2R

Ref.	Part Number	Description		4+2R 70cm	4+2R 76.2cm	4+2R 80cm	4+2x2R 70cm	4+2x2R 76.2cm	4+2x2R 80cm	5+2R 60cm	5+2x2R 60cm	5+2x2R 76.2cm
38.	1.315.070	Shim	→2014	4	4	4	4	4	4	4	4	4
38.	1.373.045	Spacer	2015→	4	4	4	4	4	4	4	4	4
38.	1.373.046	Shim	2015-2018	4	4	4	4	4	4	4	4	4
39.	1.309.052	Idler sprocket 16T		1	1	1	1	1	1	1	1	1
40.	87001620414	Bearing 6204-2RS		1	1	1	1	1	1	1	1	1
41.	1.301.433	Washer		2	2	1	1	1	1	1	1	2
42.	1.375.969	Tapped insert		1	1	1	1	1	1	1	1	1
43.	1.376.233	Chain adjuster assy	→2010	1	1	1	1	1	1	1	1	1
43.	1.378.521	Chain adjuster assy	2011→	1	1	1	1	1	1	1	1	1
44.	86700001100	Bearing nut - KM11	→2014	1	1	1	1	1	1	1	1	1
45.	86801100000	Retainer ring - MB-11	→2014	1	1	1	1	1	1	1	1	1
46.	1.375.430	Washer	→2014	1	1	1	1	1	1	1	1	1
47.	96700000112	Disk spring B112 - DIN2093	→2014	2	2	2	2	2	2	2	2	2
48.	1.375.428	Plate	→2014	1	1	1	1	1	1	1	1	1
49.	1.375.431	Sprocket 70T (5/8)	→2014	1	1	1	1	1	1	1	1	1
50.	25553201007	Friction disk	→2014	2	2	2	2	2	2	2	2	2
51.	1.310.780	Ring	→2014	1	1	1	1	1	1	1	1	1
52.	1.375.429	Hub	→2014	1	1	1	1	1	1	1	1	1
53.	1.376.020	Pin	→2014	4	4	4	4	4	4	4	4	4
54.	1.376.232	Sprocket assy - 70T	→2014	1	1	1	1	1	1	1	1	1
54.	1.377.272	Sprocket assy - 70T	2015→	1	1	1	1	1	1	1	1	1
55.	1.376.238	Chain		1	1	1	1	1	1	1	1	1
55.	1.378.523	Chain 105 pitches	2011→	1	1	1	1	1	1	1	1	1
56.	1.320.493	Connector link		1	1	1	1	1	1	1	1	1
57.	1.320.492	Half link		1	1	1	1	1	1	1	1	1
57.	1.320.492	Half link	2011→	-	-	-	-	-	-	-	-	-
58.	70200003201	Retaining ring - internal 32x1.5 - DIN471		1	1	1	1	1	1	1	1	1
59.	71632045100	Shim 32x45x1 - DIN988		3	3	3	3	3	3	3	3	3
60.*	1.351.355	Sprocket 16T	→2009	1	1	1	1	1	1	1	1	1
60.	1.351.178	Sprocket 18T	→2009	1	1	1	1	1	1	1	1	1
60.*	1.353.616	Sprocket 20T	→2009	1	1	1	1	1	1	1	1	1
60.	1.377.687	Sprocket 16T / 14T	2010→	1	1	1	1	1	1	1	1	1
60.*	1.377.583	Sprocket 18T / 16T	2010→	1	1	1	1	1	1	1	1	1
60.*	1.379.642	Sprocket 20T / 18T	2010→	1	1	1	1	1	1	1	1	1
61.	71637047100	Shim 37x47x1 - DIN988		3	3	3	3	3	3	3	3	3
62.	1.375.967	Shaft (see note below)		2	2	2	1	1	1	1	1	1
63.	1.375.966	Plate (see note below)		2	2	2	1	1	1	1	1	1
64.	1.375.965	Washer (see note below)		2	2	2	1	1	1	1	1	1
65.	87300008516	Bearing housing (see note below)- PF85		4	4	4	2	2	2	2	2	2
66.	87030620914	Y-bearing 1726209-2RS1 SKF (see note below)		2	2	2	1	1	1	1	1	1
67.	70200004501	Retaining ring - internal (see note below) 45x1.75 - DIN471		2	2	2	1	1	1	1	1	1
68.	1.354.565	Spacer (l=76) (see note below)		1	1	1	1	1	1	1	1	1
69.	80400803563	Hex socket countersunk-head bolt M8x35 - DIN7991 T50 10.9		4	4	4	4	4	4	4	4	4
70.	80400804063	Hex socket countersunk-head bolt M8x40 - DIN7991 IP 8.8		24	24	24	24	24	24	24	24	24
71.	73508000066	Hex nut M8 - DIN934		24	24	24	24	24	24	24	24	24
72.	84208074000	Key 8x7x40		2	2	2	2	2	2	2	2	2
73.	70200003501	Retaining ring - external 35x1.5 - DIN471		1	1	1	1	1	1	1	1	1
74.	1.377.725	Rubber plate	2010-2019.	2	2	2	2	2	2	2	2	2
74.	1.372.944	Rubber plate	2020→	2	2	2	2	2	2	2	2	2
75.	1.377.726	Strap	2010→	2	2	2	2	2	2	2	2	2
76.	79410002566	Hex bolt M10x25 - DIN933/8.8	2010→	8	8	8	8	8	8	8	8	8
77.	79410003066	Hex bolt M10x30 - DIN933/8.8	2010→	12	12	12	12	12	12	12	12	12
78.	1.308.407	Spacer (l=12.5)	2010-2014.	1	1	1	1	1	1	1	1	1
79.	1.320.540	Shim (l=5)	→2014	1	1	1	1	1	1	1	1	1
80.	1.378.449	Adjuster arm	2011→	1	1	1	1	1	1	1	1	1
81.	1.378.448	Adjuster nut	2011→	1	1	1	1	1	1	1	1	1
82.	1.378.453	Retainer	2011→	1	1	1	1	1	1	1	1	1
83.	1.378.524	Idler sprocket assy	2011→	1	1	1	1	1	1	1	1	1
84.	1.308.132	Cover plate	2011→	2	2	2	2	2	2	2	2	2
85.	1.379.476	Thrust sleeve	2014→	1	1	1	1	1	1	1	1	1
86.	1.377.164	Safety clutch (Walterscheid)		1	1	1	1	1	1	1	1	1
87.	1.377.271	Sprocket		1	1	1	1	1	1	1	1	1
88.	91623938861	Spring washer A10		24	24	24	24	24	24	24	24	24
89.	79410002066	Hex bolt M10x20 - DIN933/8.8		16	16	16	16	16	16	16	16	16
90.	96701320540	Spacer	2015→	1	1	1	1	1	1	1	1	1
91.	1.377.453	Bracket welded - LH		1	1	1	1	1	1	1	1	1

Note: items 62-67 are only for interior drive, item 68 is only for exterior drive.
Application of shims as necessary.
Application of items 74-77 depends on the combine open.
Parts marked with * are optional.

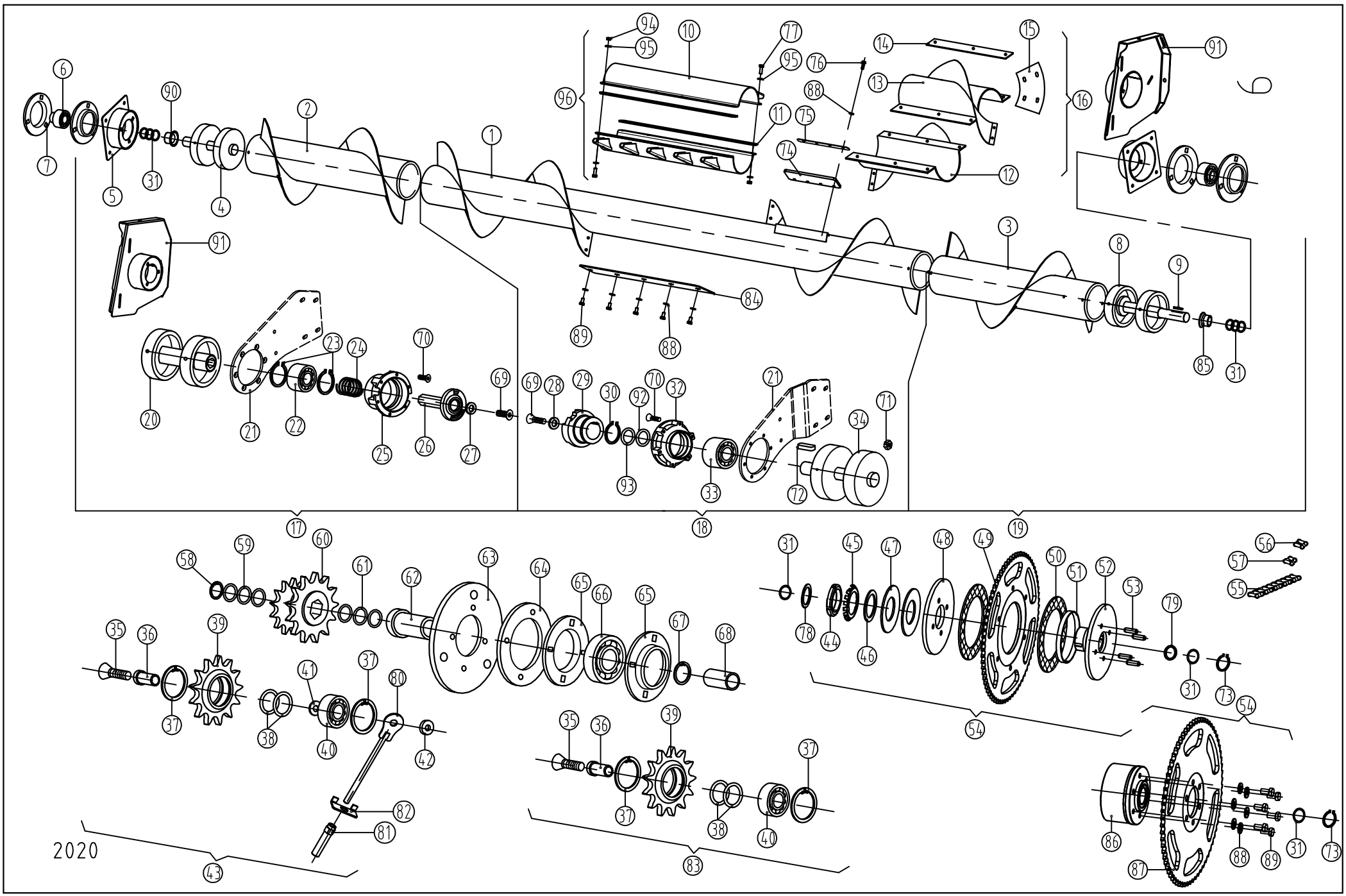
2020

AUGER ASSEMBLY - 4+2R, 4+2x2R, 5+2R, 5+2x2R

Ref.	Part Number	Description		4+2R 70cm	4+2R 76.2cm	4+2R 80cm	4+2x2R 70cm	4+2x2R 76.2cm	4+2x2R 80cm	5+2R 60cm	5+2x2R 60cm	5+2x2R 76.2cm
91.	1.377.454	Bracket welded - RH		1	1	1	1	1	1	1	1	1
92.	71630042100	Shim 30x42x1 - DIN988	2019→	6	6	6	6	6	6	6	6	6
93.	71630042050	Shim 30x42x0,5 - DIN988	2019→	2	2	2	2	2	2	2	2	2
94.	70710000066	M10 DIN980/8.8 Hex nut		12	12	12	12	12	12	12	12	12
95.	71410000060	Washer M10 - DIN125		24	24	24	24	24	24	24	24	24
96.	1.304.935	Spike tooth kit		1	1	1	1	1	1	1	1	1

Note: items 62-67 are only for interior drive, item 68 is only for exterior drive.
Application of shims as necessary.
Application of items 74-77 depends on the combine open.
Parts marked with * are optional.

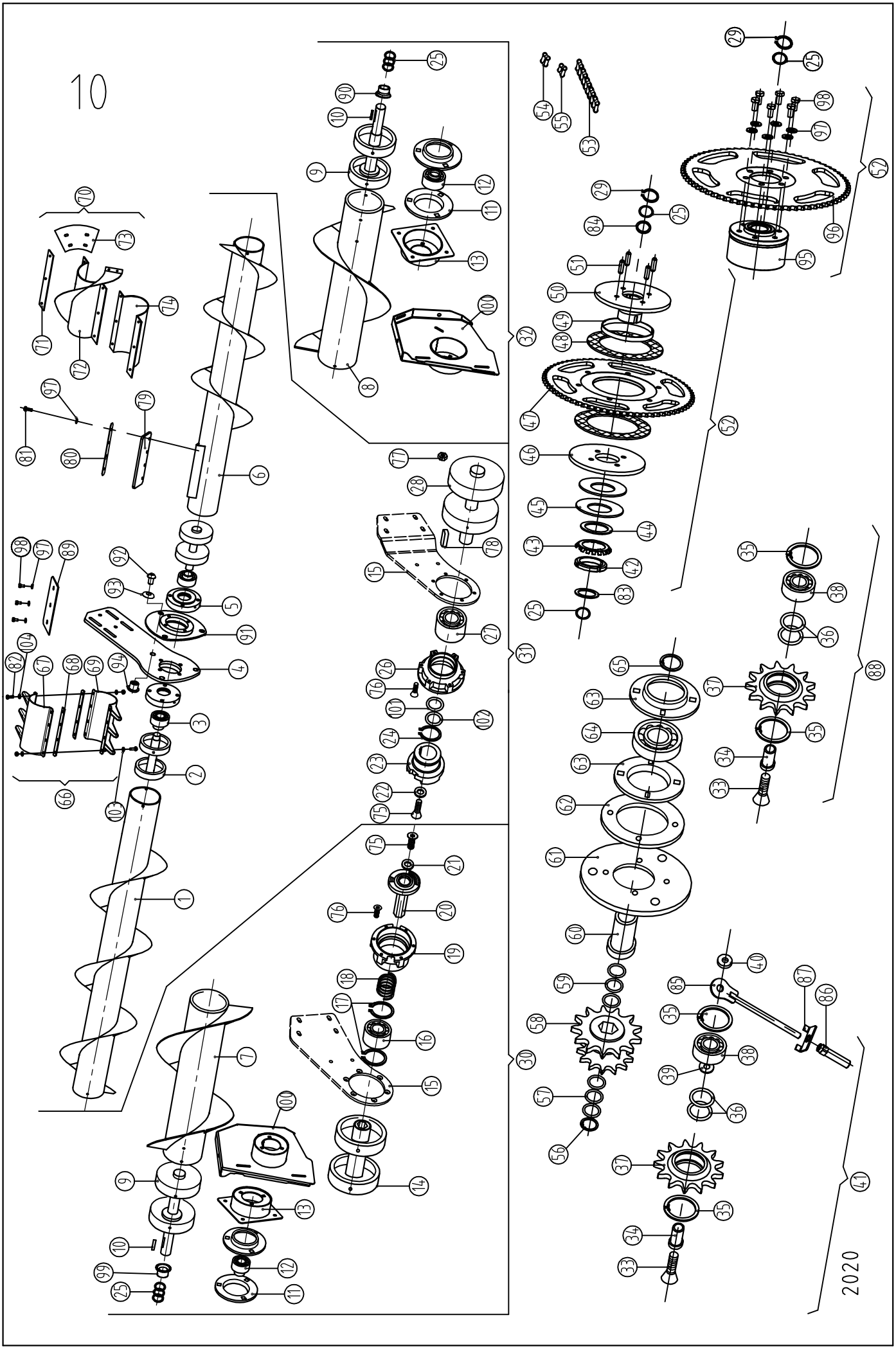
10
2020

AUGER ASSEMBLY - 6+2x3R

Ref.	Part Number	Description		6+2x3R 70 cm	6+2x3R 76.2cm
1.	1.376.379	Auger - central RH -22"pitch		-	1
1.	1.373.878	Auger - central RH -22"pitch		1	-
2.	1.304.893	Auger shaft assy		2	2
3.	87000003556	Y-Bearing /RAE35 NPPB/		2	2
4.	1.376.241	Console	→2013	1	1
4.	1.379.543	Console	2014→	1	1
5.	676.304	Bearing housing		2	2
6.	1.376.380	Auger central LH - 22"pitch		-	1
6.	1.373.877	Auger central LH - 22"pitch		1	-
7.	1.376.326	Auger - RH wing - 22"pitch		-	1
7.	1.373.885	Auger - RH wing - 22"pitch		1	-
8.	1.376.325	Auger - LH wing - 22"pitch		-	1
8.	1.373.884	Auger - LH wing - 22"pitch		1	1
9.	1.351.349	Auger shaft assy		2	2
10.	84210084000	Key B10x8x30 v. 10x8x40		2	2
11.	616.068.0	Bearing housing		4	4
12.	87000003556	Y-bearing /RAE35 NPPB/		2	2
13.	1.375.203	Bracket **(2009→ see pg. 6 item 18)**	→2008	2	2
14.	1.328.479	Auger shaft assy		2	2
15.	1.376.371	Console - central frame LH		1	1
15.	1.376.372	Console - central frame RH		1	1
15.	1.376.373	Console - wing LH		1	1
15.	1.376.374	Console - wing RH		1	1
16.	1.309.259	Bearing - 172 6211-2RS		2	2
17.	70200005501	Retaining ring -for shaft 55x2 - DIN471		4	4
18.	1.308.932	Spring		2	2
19.	1.353.179	Bearing housing		2	2
20.	1.328.472	Jaw clutch - outer		2	2
21.	1.328.492	Washer		2	2
22.	1.308.948	Washer		2	2
23.	1.328.473	Jaw cluch - inner		2	2
24.	70200004001	Retaining ring -for shaft 40x1.75 - DIN471		2	2
25.	1.309.011	Shim		6	6
26.	1.353.178	Bearing housing		2	2
27.	87000140059	Y-bearing RAE40 NPPB		2	2
28.	1.308.414	Auger shaft assy		2	2
29.	70200003501	Retaining ring - for shaft 35x1.5 - DIN471		2	2
30.	1.376.377	Auger assy - RH wing - 22"pitch		-	1
30.	1.373.883	Auger assy - RH wing - 22"pitch		1	-
31.	1.376.324	Auger assy - central pair - 22"pitch		-	1
31.	1.373.876	Auger assy - central pair - 22"pitch		1	-
32.	1.376.378	Auger assy - LH wing - 22"pitch		-	1
32.	1.373.882	Auger assy - LH wing - 22"pitch		1	-
33.	80401004063	Hex socket countersunk-head bolt M10x40 - DIN7991/10.9		2	2
34.	1.375.968	Shaft		2	2
35.	70100004701	Retaining ring - internal 47x1.75 - DIN472		4	4
36.	1.315.070	Shim	→2014	6	6
36.	1.373.045	Spacer	2015→	4	4
36.	1.373.046	Shim	2015-2018	4	4
37.	1.309.052	Idler sprocket 16T		2	2
38.	87001620414	Bearing 6204-2RS		2	2
39.	1.301.433	Washer		2	2
40.	1.375.969	Tapped insert		2	2

Note: Application of shims if necessary.
Application of items 79-82 depends on the combine open.
Parts marked with * are optional.

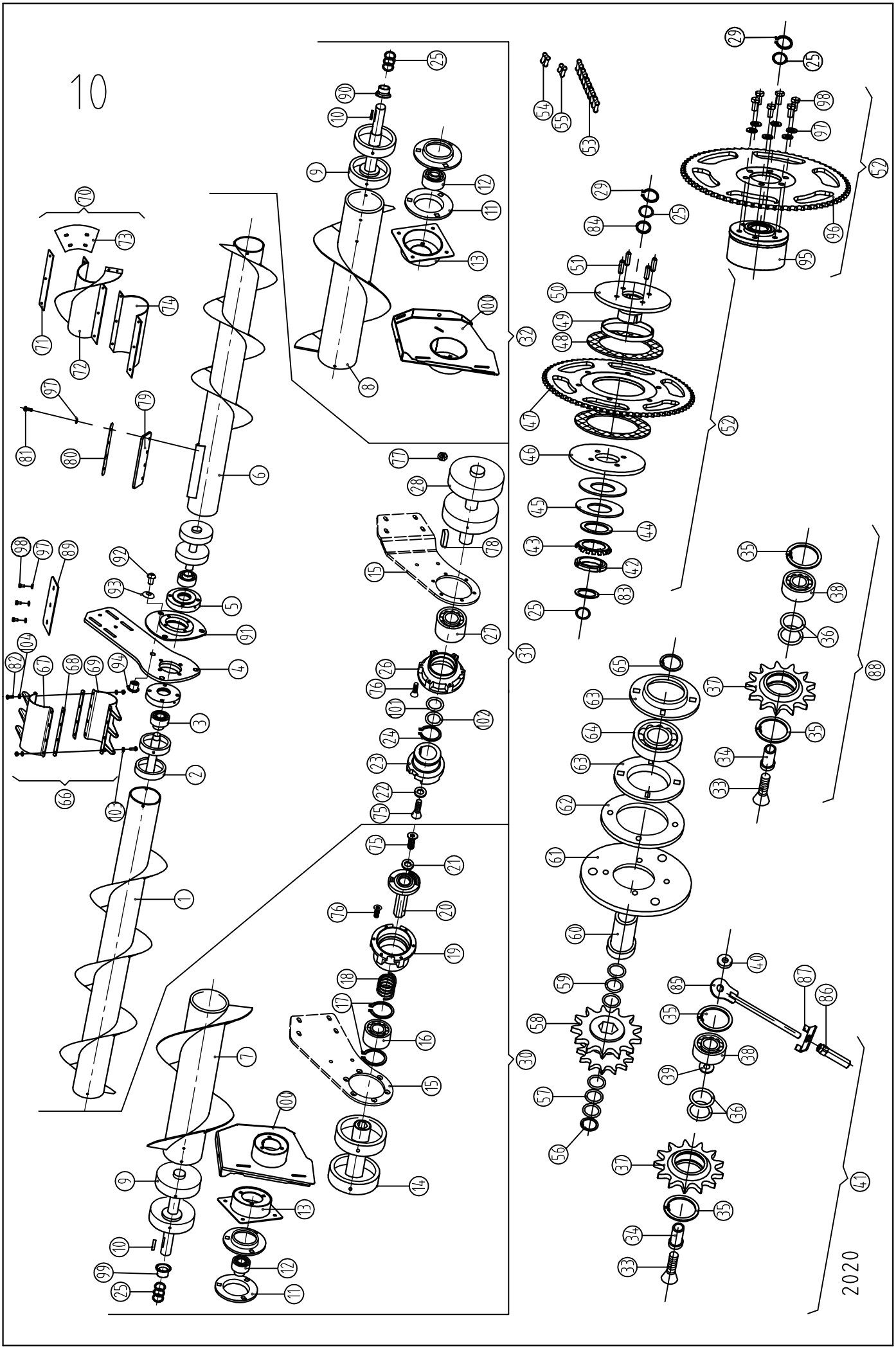
10
2020

AUGER ASSEMBLY - 6+2x3R

Ref.	Part Number	Description		6+2x3R 70 cm	6+2x3R 76.2cm
41.	1.376.233	Chain adjuster assy	→2010	2	2
41.	1.378.521	Chain adjuster assy	2011→	2	2
42.	86700001100	Bearing nut - KM11		2	2
43.	86801100000	Retainer ring - MB-11		2	2
44.	1.375.430	Washer		2	2
45.	96700000112	Disk spring B112 - DIN2093		4	4
46.	1.375.428	Plate		2	2
47.	1.375.431	Sprocket 70T (5/8)		2	2
48.	25553201007	Friction disk		4	4
49.	1.310.780	Ring		2	2
50.	1.375.429	Hub		2	2
51.	1.376.020	Pin		8	8
52.	1.376.232	Sprocket assy - 70T	→2014	2	2
52.	1.377.272	Sprocket assy - 70T	2015→	2	2
53.	1.376.238	Chain		2	2
53.	1.378.523	Chain 105 pitches	2011→	2	2
54.	1.320.493	Connector link		2	2
55.	1.320.492	Half link		2	2
55.	1.320.492	Half link	2011→	-	-
56.	70200003201	Retaining ring - external 32x1.5 - DIN471		2	2
57.	71632045100	Shim 32x45x1 - DIN988		6	6
58.*	1.351.355	Sprocket 16T	→2009	2	2
58.	1.351.178	Sprocket 18T	→2009	2	2
58.*	1.353.616	Sprocket 20T	→2009	2	2
58.	1.377.687	Sprocket 16T / 14T	2010→	2	2
58.*	1.377.583	Sprocket 18T / 16T	2010→	2	2
58.*	1.379.642	Sprocket 20T / 18T	2010→	2	2
59.	71637047100	Shim 37x47x1 - DIN988		6	6
60.	1.375.967	Shaft		2	2
61.	1.375.966	Plate		2	2
62.	1.375.965	Washer		2	2
63.	87300008516	Bearing housing - PF85		2	2
64.	87030620914	Y bearing 1726209-2RS1 SKF		2	2
65.	70200004501	Retaining ring - for shaft 45x1.75 - DIN471		2	2
66.	1.353.578	Spike tooth kit	→2013	1	1
66.	1.379.629	Spike tooth kit	2014→	1	1
67.	1.353.576	Auger finger	→2013	2	2
67.	1.379.550	Auger finger	2014→	2	2
68.	1.353.577	Strap	→2013	4	4
68.	1.379.560	Strap	2014→	4	4
69.	1.353.575	Auger finger	→2013	2	2
69.	1.379.550	Auger finger	2014→	2	2
70.	1.353.572	Auger flight extension kit - pitch 22"	→2007	1	1
70.	1.355.468	Auger flight extension kit - pitch 22"	2008→	1	1
71.	1.353.573	Strap		4	4
72.	1.353.567	Auger flight extension-LH - pitch 22"	→2007	2	2
72.	1.355.464	Auger flight extension-LH - pitch 22"	2008→	2	2
72.	1.353.568	Auger flight extension-RH - pitch 22"	→2007	2	2
72.	1.355.465	Auger flight extension-RH - pitch 22"	2008→	2	2
73.	1.353.560	Plate	→2007	2	2
74.	1.353.571	Support plate		2	2
75.	80400803563	Hex socket countersunk-head bolt M8x35 - DIN7991 T50 10.9		4	4
76.	80400804063	Hex socket countersunk-head bolt M8x40 - DIN7991 IP 8.8		24	24

Note: Application of shims if necessary.
Application of items 79-82 depends on the combine open.
Parts marked with * are optional.

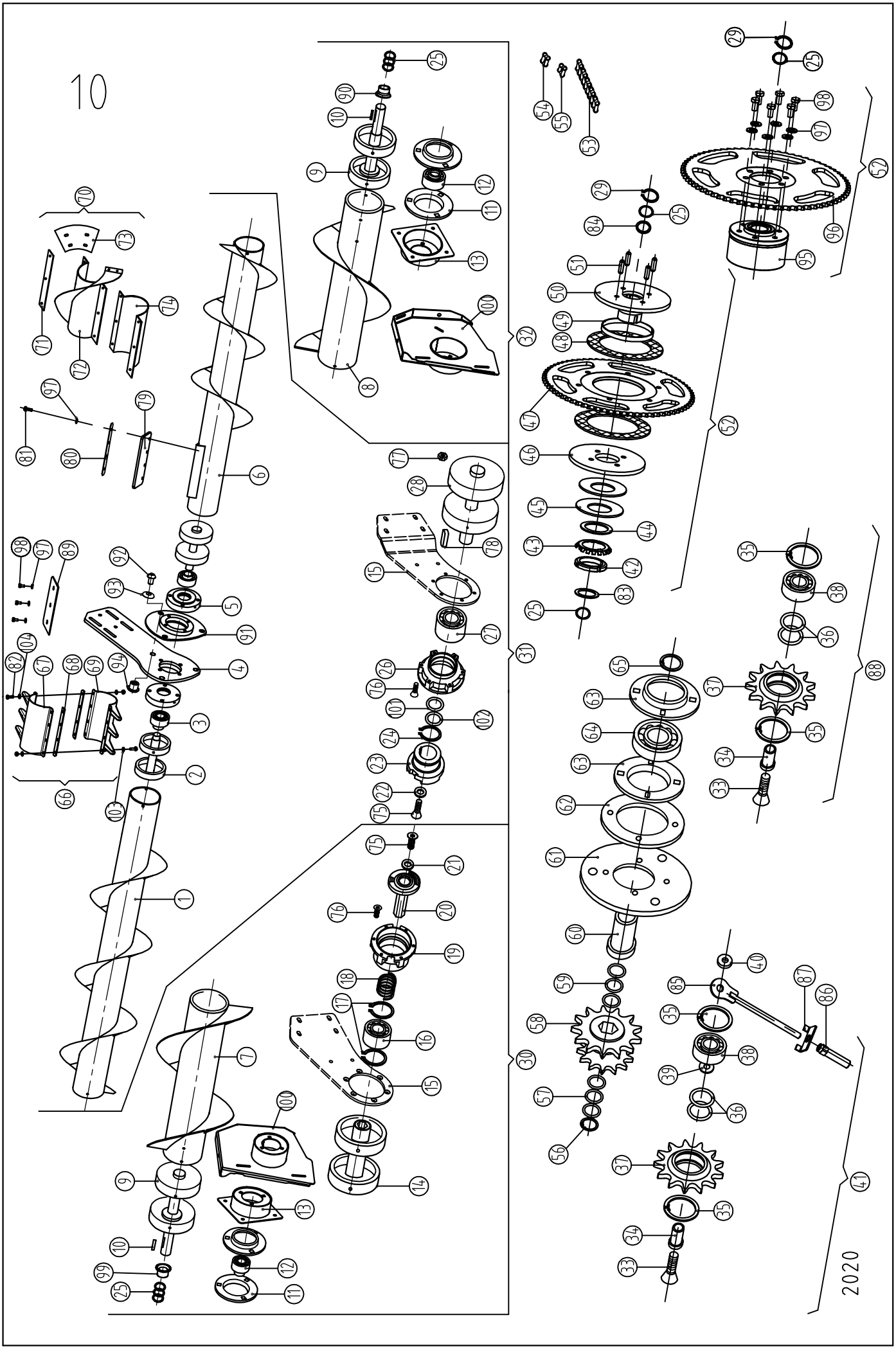
10
2020

AUGER ASSEMBLY - 6+2x3R

Ref.	Part Number	Description		6+2x3R 70 cm	6+2x3R 76.2cm
77.	73508000066	Hex nut M8 - DIN934		12	12
78.	84208074000	Key 8x7x40		2	2
79.	1.377.725	Rubber plate	2010-2019.	2	2
79.	1.372.944	Rubber plate	2020→	2	2
80.	1.377.726	Strap	2010→	2	2
81.	79410002566	Hex bolt M10x25 - DIN933/8.8	2010→	8	8
82.	79410003066	Hex bolt M10x30 - DIN933/8.8	2010→	16	16
83.	1.308.407	Spacer (l=12.5)	2010→	2	2
84.	1.320.540	Shim (l=5)	→2014	2	2
85.	1.378.449	Adjuster arm	2011→	2	2
86.	1.378.448	Adjuster nut	2011→	2	2
87.	1.378.453	Retainer	2011→	2	2
88.	1.378.524	Idler sprocket assy	2011→	2	2
89.	1.356.455	Cover plate	→2013	2	2
89.	1.379.561	Cover plate	2014→	4	4
90.	1.379.476	Thrust sleeve	2014→	1	1
91.	1.379.485	Disc welded	2014→	1	1
92.	81110001668	Hex socket button-head bolt M10x16	2014→	3	3
93.	1.379.488	Washer	2014→	3	3
94.	1.379.487	Nut	2014→	3	3
95.	1.377.164	Safety clutch (Walterscheid)		1	1
96.	1.377.271	Sprocket		1	1
97.	91623938861	Spring washer A10		26	26
98.	79410002066	Hex bolt M10x20 - DIN933/8.8		18	18
99.	96701320540	Spacer	2015→	1	1
100.	1.377.453	Bracket welded - LH		1	1
100.	1.377.454	Bracket welded - RH		1	1
101.	71630042100	Shim 30x42x1 - DIN988	2019→	6	6
102.	71630042050	Shim 30x42x0,5 - DIN988	2019→	2	2
103.	70710000066	M10 DIN980/8.8 Hex nut		16	16
104.	71410000060	Washer M10 - DIN125		32	32

Note: Application of shims if necessary.
Application of items 79-82 depends on the combine open.
Parts marked with * are optional.

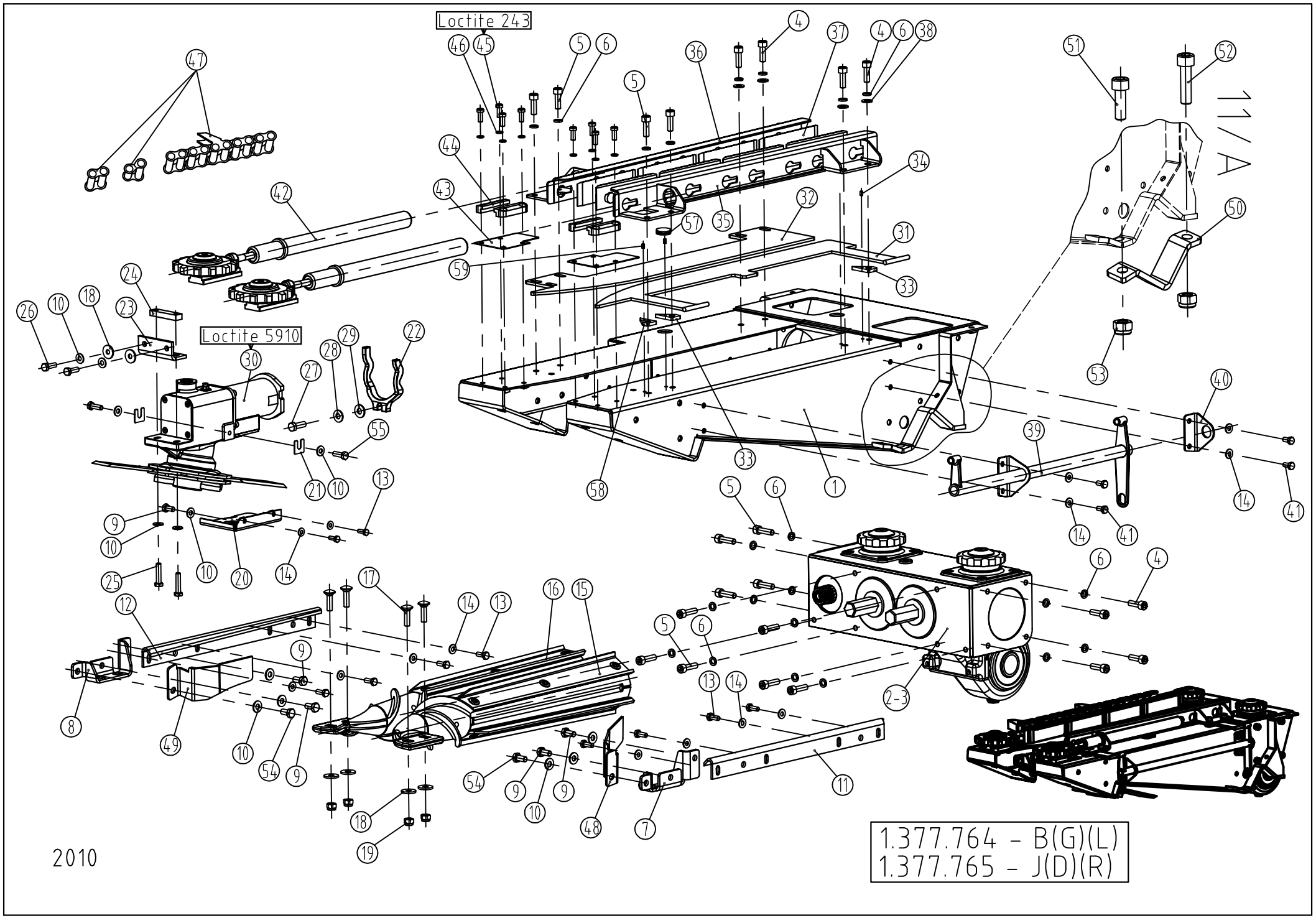
Loctite 243
Loctite 5910
11/A
1.377.764 - B(G)(L)
1.377.765 - J(D)(R)
2010

SNAPPING UNIT

Ref.	Part Number	Description		6 row	8 row	9 row	12 row
1.	1.377.754	Frame assy		6	8	9	12
2.	1.377.730	Gearbox - RH		3	4	4	6
3.	1.377.729	Gearbox - LH		3	4	4	6
4.	80210003063	Hex socket head cap bolt M10x30 - DIN912/10.9		48	64	72	96
5.	80210003563	Hex socket head cap bolt M10x35 - DIN912/10.9		84	112	126	168
6.	71810000060	Spring washer M10 - DIN7980		132	176	198	264
7.	1.375.800	Support - LH		6	8	9	12
8.	1.375.801	Support - RH		6	8	9	12
9.	79410002066	Hex bolt M10x20 - DIN933/8.8		30	40	45	60
10.	91623938861	Spring washer		78	104	117	156
11.	1.377.396	Clearing knife - LH		6	8	9	12
12.	1.377.397	Clearing knife - RH		6	8	9	12
13.	79408001866	Hex bolt M8x18 - DIN933/8.8		60	80	90	120
14.	91623938761	Spring washer		84	112	126	168
15.	1.377.394	Snapping roll - LH		6	8	9	12
16.	1.377.395	Snapping roll - RH		6	8	9	12
-	ARALUB HLP-2	Lubricating grease					
17.	76310003566	Carriage bolt M10x35 - DIN603/8.8		24	32	36	48
18.	96702375920	Washer		36	48	54	72
19.	70710000066	Lock nut M10 - DIN980		24	32	36	48
20.	1.377.793	Cover plate		6	8	9	12
21.	1.377.990	Shimming plate		24	32	36	48
22.	1.377.788	Fixing fork		6	8	9	12
23.	1.377.791	Angle		6	8	9	12
24.	1.378.178	Flat		6	8	9	12
25.	79410004566	Hex bolt M10x45 - DIN933/8.8		12	16	18	24
26.	79410003063	Hex bolt M10x30 - DIN933/8.8		12	16	18	24
27.	79412003566	Hex bolt M12x35 - DIN933/8.8		6	8	9	12
28.	91623938961	Spring washer		6	8	9	12
29.	1.377.251	Washer		6	8	9	12
30.	1.377.762	Stalk chopper assy		6	8	9	12
-	Loctite 5910	RTV silicone					
31.	1.375.819	Snapping plate - LH	→2010	6	8	9	12
31.	1.378.472	Snapping plate - LH	2011→	6	8	9	12
32.	1.375.822	Snapping plate - RH	→2010	6	8	9	12
32.	1.378.474	Snapping plate - RH	2011→	6	8	9	12
33.	1.376.067	Washer		12	16	18	24
34.	73005000801	Spring pin 5x8		12	16	18	24
35.	1.377.983	Chain guide - LH		6	8	9	12
36.	1.377.984	Chain guide - RH		6	8	9	12
37.	1.377.088	Inset		48	64	72	96
38.	71410000060	Washer M10 - DIN125		24	32	36	48
39.	1.375.813	Crank-arm assy		6	8	9	12
40.	1.377.989	Console		6	8	9	12
41.	79408001666	Hex bolt M8x16 - DIN933/8.8		24	32	36	48
42.	1.375.755	Chain adjuster assy		12	16	18	24
43.	1.375.832	Shimming plate		12	16	18	24
44.	1.375.833	Guide		24	32	36	48
45.	80308002062	Hex socket head cap bolt M8x20 - DIN6912/12.9		48	64	72	96
-	Loctite 243	Threadlocking agent					
46.	71808000060	Spring washer M8 - DIN7980	→2013	48	64	72	96
47.	1.326.221	Gathering chain (t=30mm, 36 pitches)		12	16	18	24
47.	84553333520	Offset link-30mm pitch (repairs only)		12	16	18	24
47.	84530000000	Connector link-30mm pitch (repairs only)		12	16	18	24
48.	1.377.398	Deflector plate - LH		6	8	9	12
49.	1.377.399	Deflector plate - RH		6	8	9	12
50.	1.375.947	Clamping bracket		12	16	18	24
51.	80214004566	Hex socket head cap bolt M14x45 - DIN912/8.8		12	16	18	24
52.	80214006566	Hex socket head cap bolt M14x65 - DIN912/8.8		12	16	18	24
53.	74901400066	Hex nut - plastic insert M14 - DIN982/8.		24	32	36	48
54.	79410002566	Hex bolt M10x25 - DIN933/8.8		12	16	18	24
55.	79410003063	Hex bolt M10x30 - DIN933/10.9		12	16	18	24
56.	96700000003	Rubber plug *		6	8	9	12
57.	1.373.740	Washer		6	8	9	12
58.	73005001601	Spring pin 5x16		6	8	9	12

Note: The items marked with * are only valid for machines without a chopper!

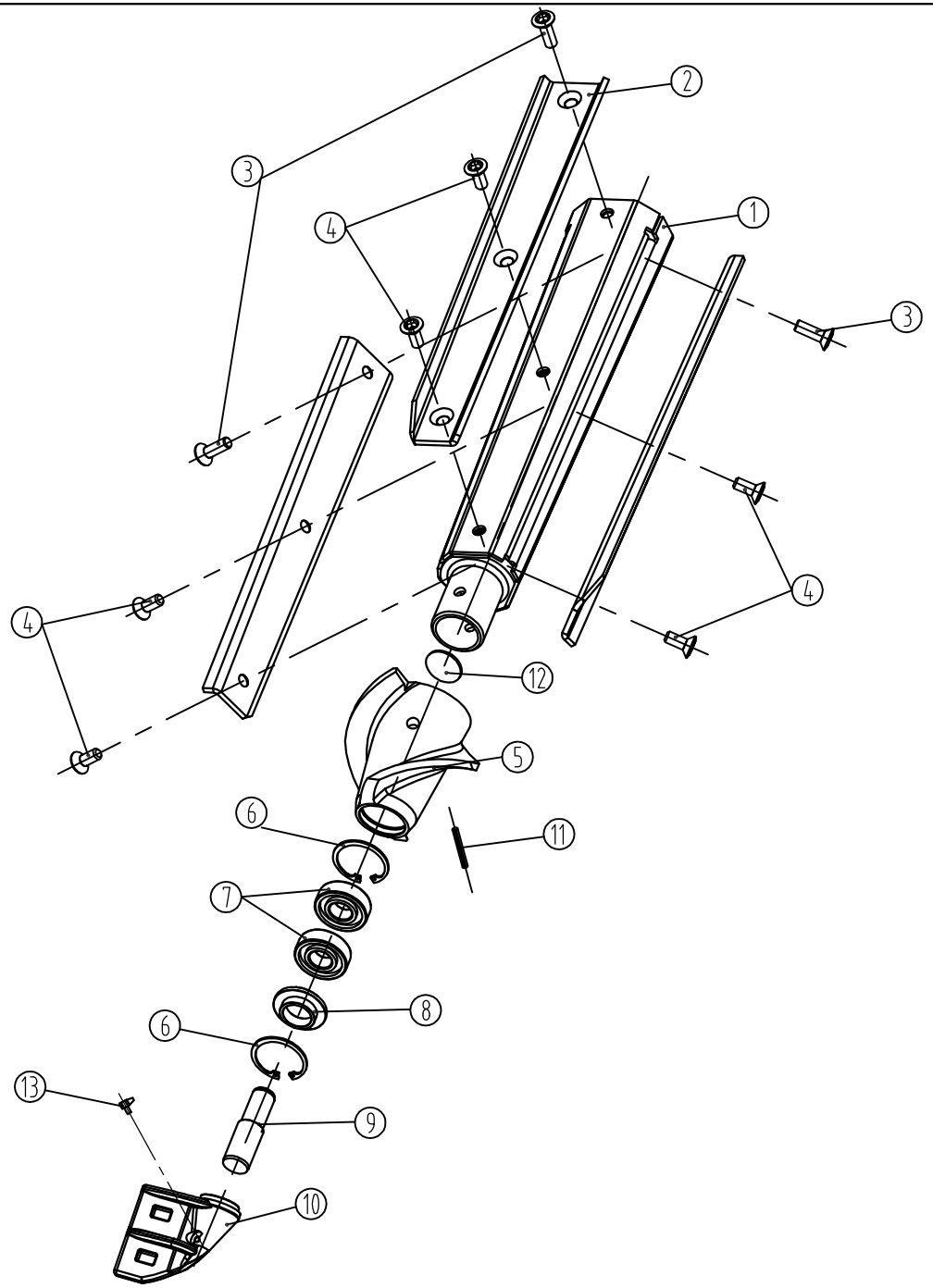

1.377.394 - LH
1.377.395 - RH

2013

12

SNAPPING ROLL

Ref.	Part Number	Description		6 row	8 row	9 row	12 row
1.	1.377.735	Snapping roll body		12	16	18	24
2.	1.377.258	Snapping roll flute - LH		12	16	18	24
2.	1.378.428	Snapping roll flute - LH	2011→	12	16	18	24
2.	1.377.407	Snapping roll flute - Central		12	16	18	24
2.	1.378.430	Snapping roll flute - Central	2011→	12	16	18	24
2.	1.377.406	Snapping roll flute - RH		12	16	18	24
2.	1.378.429	Snapping roll flute - RH	2011→	12	16	18	24
3.	80401003063	Hex socket ctrsunk head bolt M10x30 - DIN7991/10.9		36	48	54	72
4.	80401002563	Hex socket ctrsunk head bolt M10x25 - DIN7991/10.9		72	96	108	144
5.	1.377.299	Auger - LH		6	8	9	12
5.	1.377.300	Auger - RH		6	8	9	12
6.	70100004001	Retaining ring - internal 40x1.75 - DIN472		24	32	36	48
7.	87000420314	Bearing 4203 - DIN625		24	32	36	48
8.	1.377.392	Spacer		12	16	18	24
9.	1.377.393	Shaft		12	16	18	24
10.	1.377.297	Bearing housing - LH		6	8	9	12
10.	1.377.298	Bearing housing - RH		6	8	9	12
11.	73010007001	Spring pin 10x70 - DIN1481	→2010	12	16	18	24
11.	73006007001	Spring pin 6x70 - DIN1481	→2010	12	16	18	24
11	73100106501	Pin 10x65 - DIN28739	2011→	12	16	18	24
12.	85804000700	Seal 40x7 NBR	2010→	12	16	18	24
13.	70006011860	Grease fitting 6x1x180° - DIN71412	2011→	12	16	18	24

13/A

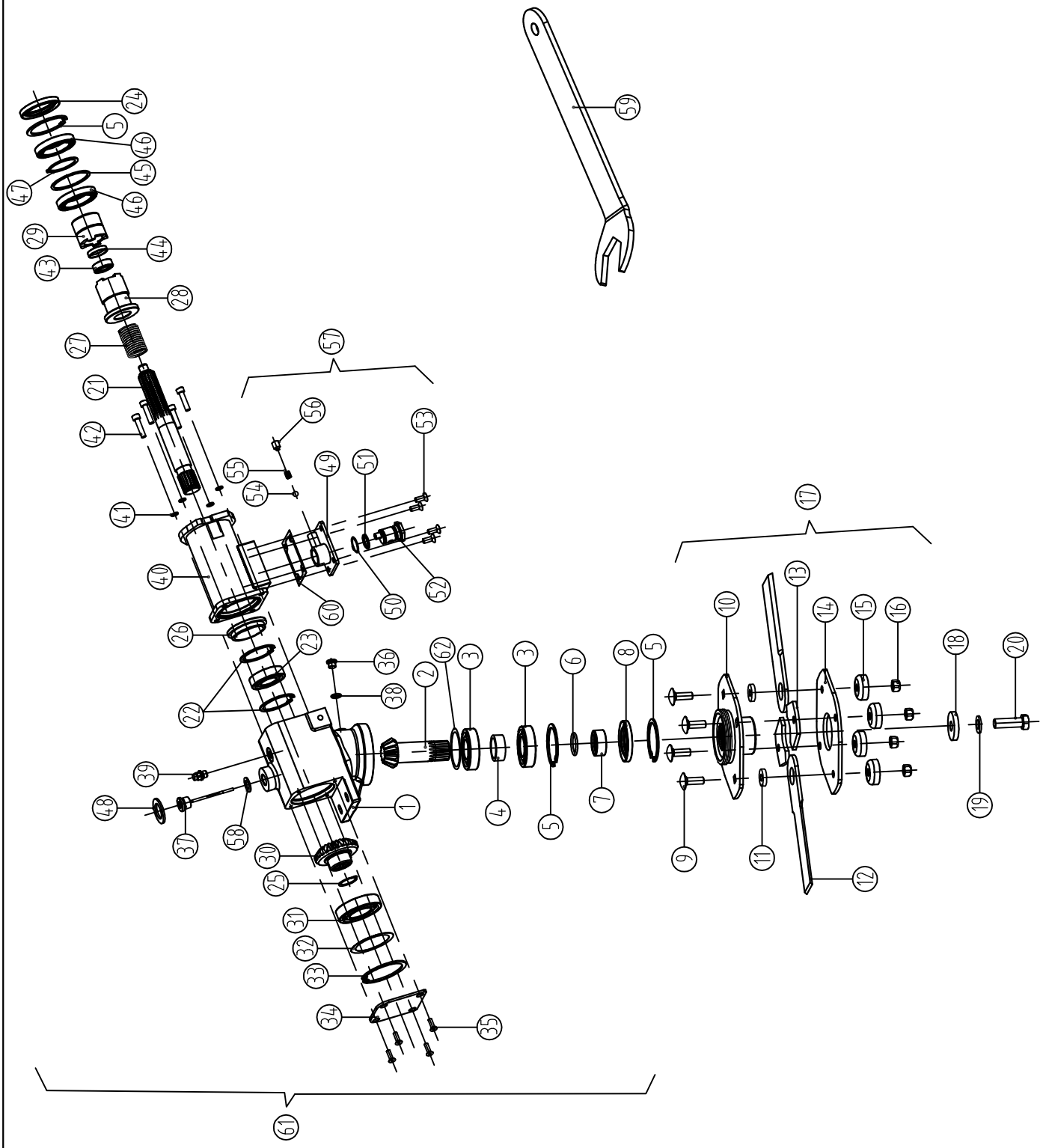
24
5
46
45
47
46
29
44
43
28
27
57
21
56
42
53
55
49
51
54
41
17
40
50
52
60
26
23
36
62
2
3
3
6
8
5
10
13
14
15
16
18
20
22
38
39
48
37
58
1
4
5
7
9
11
12
19
30
25
31
32
33
34
35
61
59

2019

STALK CHOPPER (2010→)

Ref.	Part Number	Description		6 row 70-76,2 cm	7 row 60 cm	8 row 50-56 cm	8 row 70-76,2 cm	9 row 60;76,2 cm	12 row 50-56 cm	12 row 70-76,2 cm	16 row 70-76,2 cm
1.	1.377.763	Gearbox housing		6	7	8	8	9	12	12	16
2.	1.375.702	Bevel gear 13T		6	7	8	8	9	12	12	16
3.	87001620710	Bearing 6207 - DIN625		12	14	16	16	18	24	24	32
4.	1.377.769	Spacer		6	7	8	8	9	12	12	16
5.	70100007201	Retaining ring - internal 72x2.5 - DIN472		18	21	24	24	27	36	36	48
6.	63003503500	O-ring 35X3.5 - DIN3771		6	7	8	8	9	12	12	16
7.	1.375.744	Spacer		6	7	8	8	9	12	12	16
8.	85804572081	Seal 45x72x8 - DIN3760-AS		6	7	8	8	9	12	12	16
9.	1.377.799	Carriage bolt		24	28	32	32	36	48	48	64
-	Loctite 243	Threadlocking agent									
10.	1.377.767	Knife support		6	7	4	8	9	6	12	16
10.	1.379.687 *	Knife support		-	-	4	-	-	6	-	-
11.	1.355.038	Bushing		12	14	16	16	18	24	24	32
12.	1.353.038	Knife		12	14	16	16	18	24	24	32
13.	1.378.347	Spacer		12	14	16	16	18	24	24	32
14.	1.378.344	Knife support plate - bottom		6	7	8	8	9	12	12	16
15.	1.355.039	Cap		24	28	32	32	36	48	48	64
16.	70712012563	Nut hex M12x1.25 - DIN980		24	28	32	32	36	48	48	64
17.	1.377.766	Knife assy		6	7	4	8	9	6	12	16
17.	1.379.686 *	Knife assy		-	-	4	-	-	6	-	-
18.	1.375.752	Washer		6	7	8	8	9	12	12	16
19.	91623939161	Spring washer		6	7	8	8	9	12	12	16
20.	79316155066	Hex bolt M16x1.5x50 - DIN960/8.8		6	7	8	8	9	12	12	16
-	Loctite 243	Threadlocking agent									
21.	1.377.777	Shaft		6	7	8	8	9	12	12	16
22.	70100006201	Retaining ring - internal 62x2 - DIN472		12	14	16	16	18	24	24	32
23.	87000620611	Bearing 6206 - DIN625		6	7	8	8	9	12	12	16
24.	85805007208	Seal 50x72x8 - DIN3760-AS		6	7	8	8	9	12	12	16
25.	70200003001	Retaining ring - external 30x1.5 - DIN471		12	14	16	16	18	24	24	32
26.	1.377.776	Disk		6	7	8	8	9	12	12	16
27.	1.377.781	Spring		6	7	8	8	9	12	12	16
28.	1.377.778	Clutch half - I		6	7	8	8	9	12	12	16
29.	1.377.779	Clutch half - II		6	7	8	8	9	12	12	16
30.	1.375.701	Bevel gear 24T		6	7	8	8	9	12	12	16
31.	87001620810	Bearing 6208 - DIN625		6	7	8	8	9	12	12	16
32.	71663080050	Shim 63x80x0.5		12	14	16	16	18	24	24	32
32.	71663080020	Shim 63x80x0.2		12	14	16	16	18	24	24	32
32.	71663080010	Shim 63x80x0.1		6	7	8	8	9	12	12	16
33.	70100008001	Retaining ring - internal 80x2.5 - DIN472		6	7	8	8	9	12	12	16
34.	1.375.743	Cover plate		6	7	8	8	9	12	12	16
-	Loctite 5910	RTV silicone									
35.	80400602063	TORX socket countersunk-head bolt M6x20 - DIN7991/10.9		24	28	32	32	36	48	48	64
-	Loctite 243	Threadlocking agent									
36.	1.376.783	Closing screw		6	7	8	8	9	12	12	16
37.	1.377.095	Dipstick		6	7	8	8	9	12	12	16
38.	05200001200	Copper washer 12x16 - DIN7603		6	7	8	8	9	12	12	16
39.	1.309.247	Breather		6	7	8	8	9	12	12	16
40.	1.377.770	Housing		6	7	8	8	9	12	12	16
-	Loctite 5910	RTV silicone									
41.	71808000060	Spring washer M8 - DIN7980		24	28	32	32	36	48	48	64
42	80208003066	Hex socket head cap bolt M8x30 - DIN912		24	28	32	32	36	48	48	64
43.	87010620214	Bearing 6202 - DIN625		6	7	8	8	9	12	12	16
-	Loctite 603	Retaining compound									
44.	85803500700	Cup 35x7		6	7	8	8	9	12	12	16
45.	1.377.780	Spacer		6	7	8	8	9	12	12	16
46.	87006191014	Bearing 61910 - DIN625		12	14	16	16	18	24	24	32
47.	70200005001	Retaining ring - external 50x2 - DIN471		6	7	8	8	9	12	12	16
48.	1.377.986	Seal		6	7	8	8	9	12	12	16
49.	1.377.783	Switch housing		6	7	8	8	9	12	12	16
50.	70200002501	Retaining ring - external 25x1.2 - DIN471		6	7	8	8	9	12	12	16
51.	63002003009	O-ring 20x3		6	7	8	8	9	12	12	16

Note: Application of the shims depends on the backlash of the gears.

The items marked with * are used at every second snapping unit from the right in case of 20" and 22" machines!

13/A

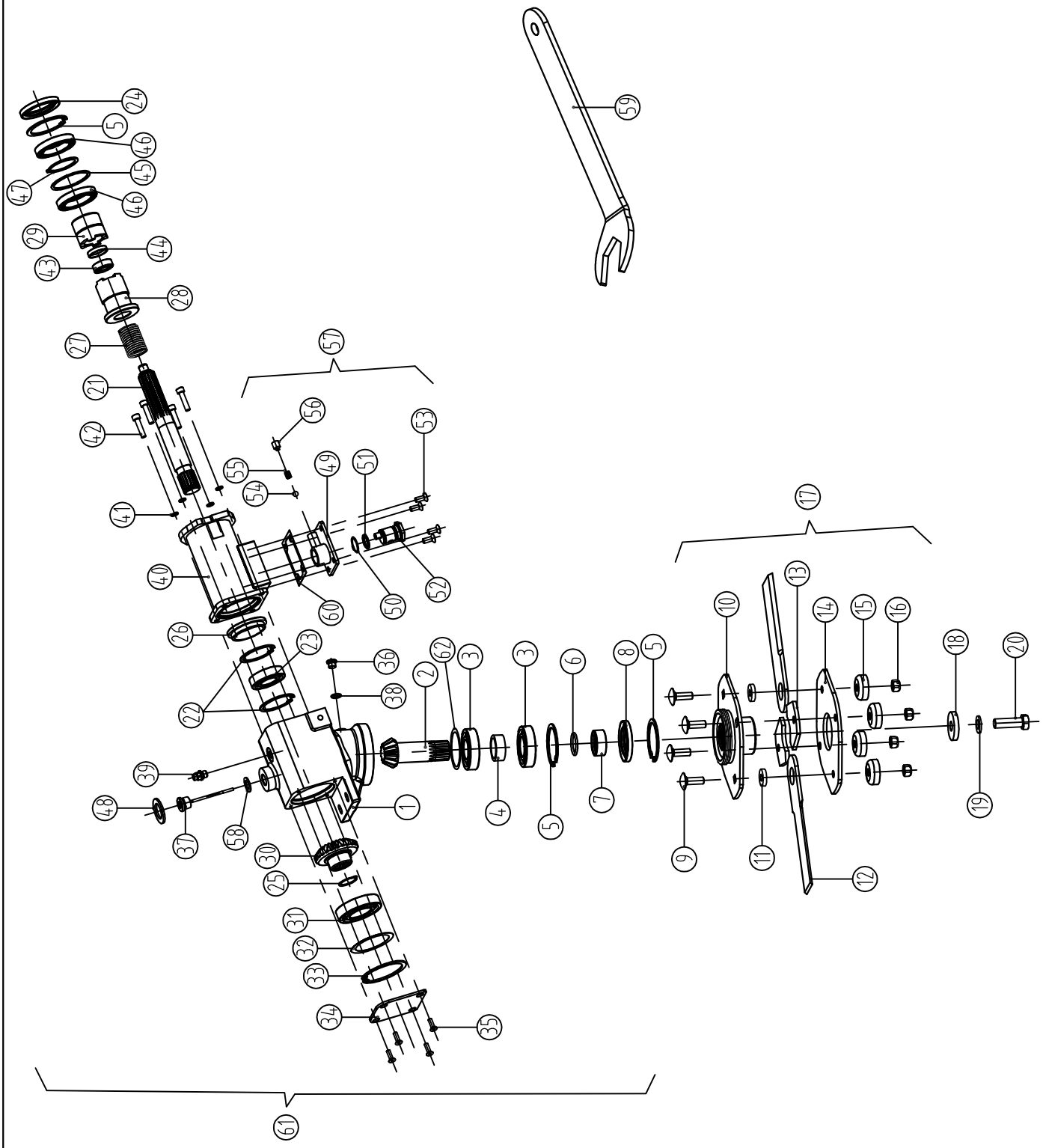
24
5
46
45
47
46
29
44
43
28
27
57
21
56
42
53
55
49
51
54
41
17
40
50
52
60
26
23
36
62
2
3
3
6
8
5
10
13
14
15
16
18
20
22
38
39
48
37
58
1
4
5
7
9
11
12
19
30
25
31
32
33
34
35
61
59

2019

STALK CHOPPER (2010→)

Ref.	Part Number	Description		6 row 70-76,2 cm	7 row 60 cm	8 row 50-56 cm	8 row 70-76,2 cm	9 row 60;76,2 cm	12 row 50-56 cm	12 row 70-76,2 cm	16 row 70-76,2 cm
52.	1.377.787	Disengaging pin		6	7	8	8	9	12	12	16
53.	80400802063	Hex socket countersunk-head bolt M8x20 - DIN7991/8.8		24	28	32	32	36	48	48	64
54.	85609000000	Bearing ball		6	7	8	8	9	12	12	16
55.	1.327.689	Spring		6	7	8	8	9	12	12	16
56.	1.327.690	Set screw		6	7	8	8	9	12	12	16
-	Loctite 243	Threadlocking agent									
57.	1.377.782	Switch assy		6	7	8	8	9	12	12	16
-	Loctite 5910	RTV silicone									
58.	05200200024	Copper washer 20x24 - DIN7603		6	7	8	8	9	12	12	16
59.	1.378.697	Wrench	2011→	1	1	1	1	1	1	1	1
60.	1.379.298	Gasket	2013 -2016.	6	7	8	8	9	12	12	16
61.	1.379.465	Chopper gearbox ass.		6	7	8	8	9	12	12	16
62.	716056072030	Shim 56x72x0.3	2018→	6	7	8	8	9	12	12	16
	1.377.762	Stalk chopper assy. (items 17,18,19,20 and 61)		6	7	4	8	9	6	12	16
	1.379.707 *	Stalk chopper assy. (items 17,18,19,20 and 61)		-	-	4	-	-	6	-	-

Note: Application of the shims depends on the backlash of the gears.

The items marked with * are used at every second snapping unit from the right in case of 20" and 22" machines!

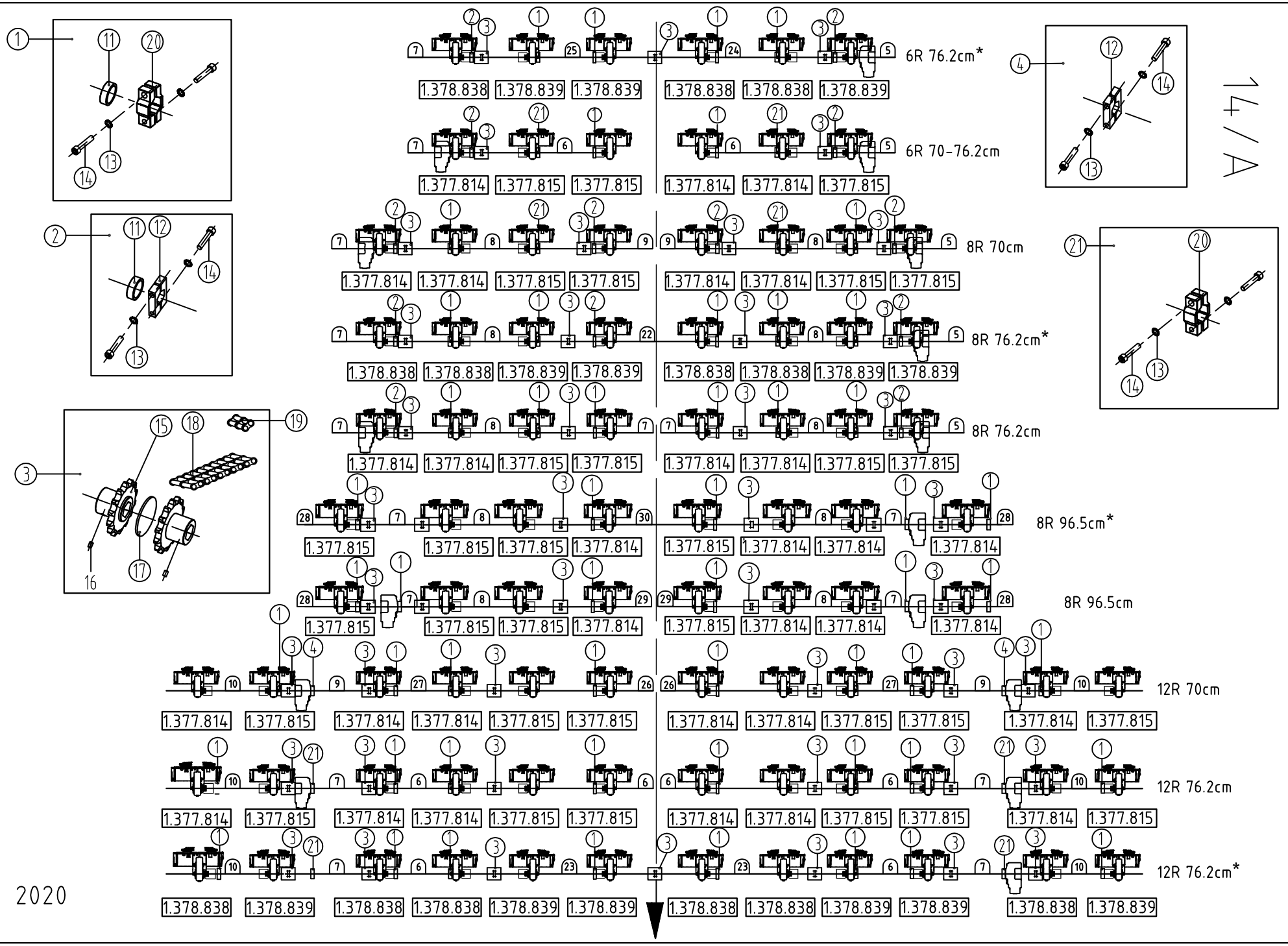
6R 76.2cm*
1.378.838 1.378.839 1.378.839 1.378.838 1.378.838 1.378.839
6R 70-76.2cm
1.377.814 1.377.815 1.377.815 1.377.814 1.377.814 1.377.815
8R 70cm
1.377.814 1.377.814 1.377.815 1.377.815 1.377.814 1.377.814 1.377.815 1.377.815
8R 76.2cm*
1.378.838 1.378.838 1.378.839 1.378.839 1.378.838 1.378.838 1.378.839 1.378.839
8R 76.2cm
1.377.814 1.377.814 1.377.815 1.377.815 1.377.814 1.377.814 1.377.815 1.377.815
8R 96.5cm*
1.377.815 1.377.815 1.377.815 1.377.814 1.377.815 1.377.814 1.377.814 1.377.814
8R 96.5cm
1.377.815 1.377.815 1.377.815 1.377.814 1.377.815 1.377.814 1.377.814 1.377.814
12R 70cm
1.377.814 1.377.815 1.377.814 1.377.814 1.377.815 1.377.815 1.377.814 1.377.814 1.377.815 1.377.815 1.377.814 1.377.815
12R 76.2cm
1.377.814 1.377.815 1.377.814 1.377.814 1.377.815 1.377.815 1.377.814 1.377.814 1.377.815 1.377.815 1.377.814 1.377.815
12R 76.2cm*
1.378.838 1.378.839 1.378.838 1.378.838 1.378.839 1.378.839 1.378.838 1.378.838 1.378.839 1.378.839 1.378.838 1.378.839
14/A
2020

SNAPPING UNIT DRIVE

Ref.	Part Number	Description		6R +chop 70cm	6R 76.2cm	6R +chop 76.2cm	8R +chop 70cm	8R 76.2cm	8R +chop 76.2cm	8R 96.5cm	8R +chop 96.5cm	12R +chop 70cm	12R 76.2cm	12R +chop 76.2cm
5.	1.376.517	Hexagonal shaft l=548		1	1	1	1	1	1	-	-	-	-	-
6.	1.376.502	Hexagonal shaft l=1220		2	-	2	-	-	-	-	-	-	2	4
7.	1.376.503	Hexagonal shaft l=480		1	1	1	1	1	3	2	2	-	2	2
8.	1.376.504	Hexagonal shaft l=1582		-	-	-	2	2	2	2	2	-	-	-
9.	1.376.505	Hexagonal shaft l=340		-	-	-	2	-	-	-	-	2	-	-
10.	1.376.501	Hexagonal shaft l=1214		-	-	-	-	-	-	-	-	2	2	2
11.	1.376.490	Spacer		6	6	6	8	8	8	5	6	8	8	8
12.	1.351.164	Clamp - half piece only		4	4	4	8	4	4	-	-	4	-	-
13.	72210000060	Spring washer M10 - DIN128/A		12	12	12	16	16	16	10	12	20	24	24
14.	80210004066	Bolt - socket head M10x40 - DIN912/8.8		12	12	12	16	16	16	10	12	20	24	24
15.	1.354.663	Sprocket		4	4	4	8	8	8	12	12	12	12	12
16.	80108001266	Set screw M8x12 - DIN916/8.8		4	4	4	8	8	8	12	12	12	12	12
17.	1.354.660	Disk		2	2	2	4	4	4	6	6	6	6	6
18.	1.355.403	Duplex chain t=1"		2	2	2	4	4	4	6	6	6	6	6
19.	84501000032	Connecting link t=1"		2	2	2	4	4	4	6	6	6	6	6
20.	1.355.909	Clamp - half piece only	2008→	8	8	8	8	12	12	10	12	16	20	20
22.	1.379.071	Hexagonal shaft l=1636	2013→	-	-	-	-	1	-	-	-	-	-	-
23.	1.378.400	Hexagonal shaft l=1560	2013→	-	-	-	-	-	-	-	-	-	2	-
24.	1.379.706	Hexagonal shaft l=1826	2014→	-	1	-	-	-	-	-	-	-	-	-
25.	1.377.809	Hexagonal shaft l=1350	2014→2015	-	1	-	-	-	-	-	-	-	-	-
25.	1.373.890	Hexagonal shaft l=1436	2016→	-	1	-	-	-	-	-	-	-	-	-
26.	1.376.506	Hexagonal shaft l=960		-	-	-	-	-	-	-	-	2	-	-
27.	1.377.810	Hexagonal shaft l=1260		-	-	-	-	-	-	-	-	2	-	-
28.	1.377.813	Hexagonal shaft l=588		-	-	-	-	-	-	2	2	-	-	-
29.	1.379.587	Hexagonal shaft l=600		-	-	-	-	-	-	-	2	-	-	-
30.	1.372.764	Hexagonal shaft l=2047		-	-	-	-	-	-	1	-	-	-	-

Note: item 1 includes items 11, 13, 14, 20
item 2 includes items 11, 12, 13, 14
item 3 includes items 15, 16, 17, 18, 19
item 4 includes items 12, 13, 14
item 21 includes items 13, 14, 20

Note: Models marked with * are non chopper headers!

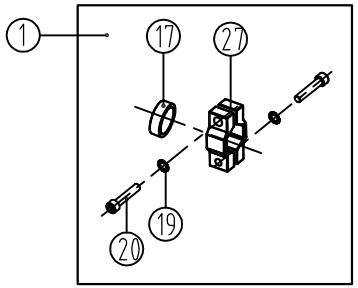

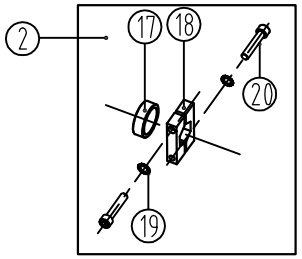

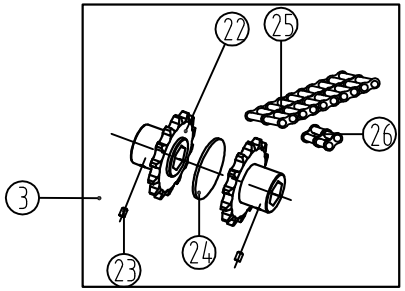

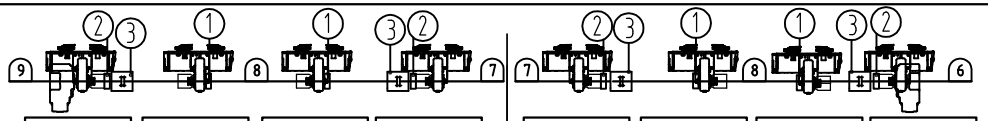

8R 50.8cm

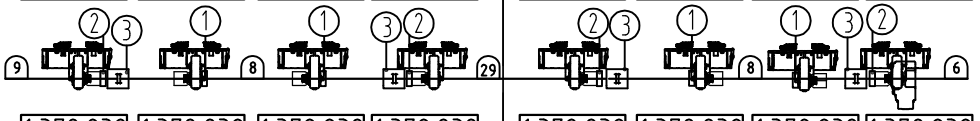

8R 50.8cm*

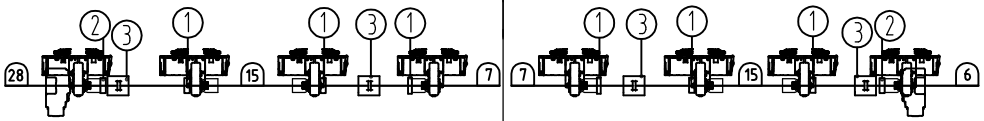

8R 55.8cm

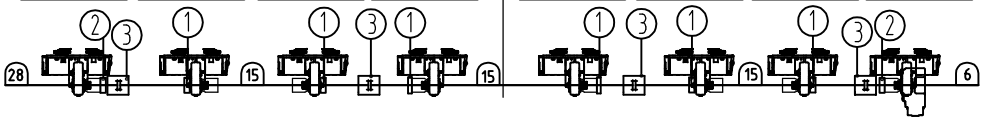

8R 55.8cm*

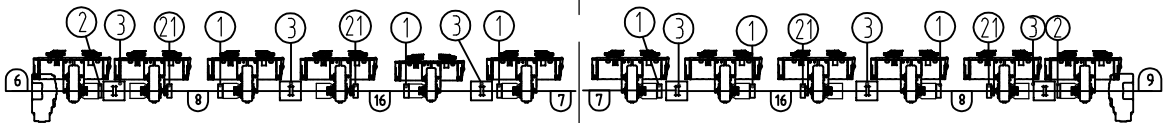

12R 50,8cm

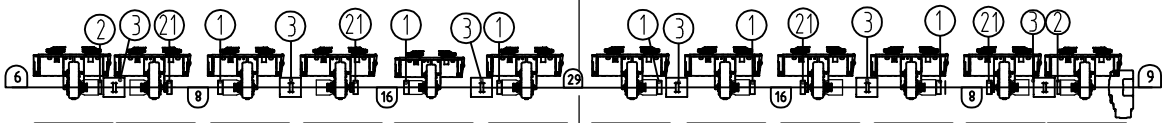

12R 50,8cm*

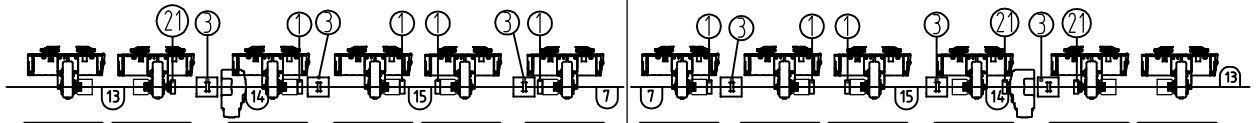

12R 55,8cm

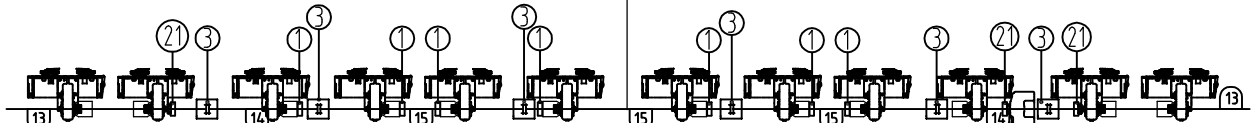

12R 55,8cm*

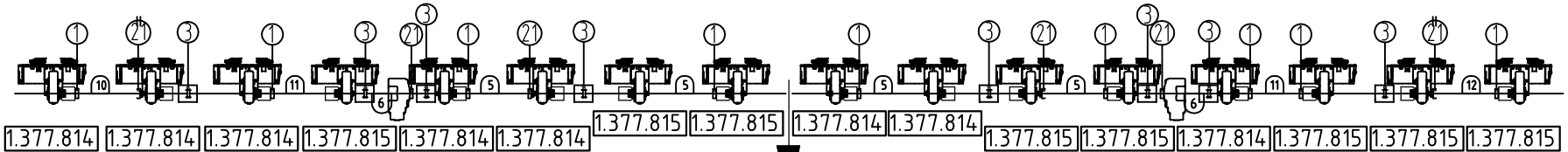

16R 76.2cm

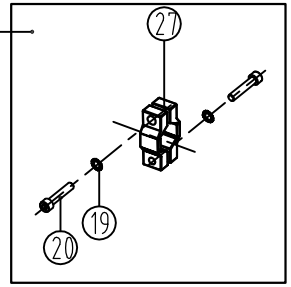

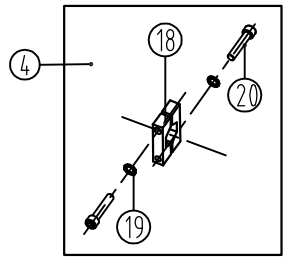

2019

SNAPPING UNIT DRIVE

Ref.	Part Number	Description		8 row 50 cm	8 row +chop 50 cm	8 row 56 cm	8 row +chop 56 cm	12 row 50cm	12 row +chop 50cm	12 row 56cm	12 row +chop 56cm	16 row +chop 76,2cm
5.	1.376.502	Hexagonal shaft l=1220		-	-	-	-	-	-	-	-	4
6.	1.376.503	Hexagonal shaft l=480		1	1	1	1	1	1	-	-	2
7.	1.376.505	Hexagonal shaft l=340		-	2	-	2	-	2	-	2	-
8.	1.376.506	Hexagonal shaft l=960		2	2	-	-	2	2	-	-	-
9.	1.376.517	Hexagonal shaft l=548		1	1	-	-	1	1	-	-	-
10.	1.377.809	Hexagonal shaft l=1350		-	-	-	-	-	-	-	-	1
11.	1.377.811	Hexagonal shaft l=1360		-	-	-	-	-	-	-	-	2
12.	1.379.096	Hexagonal shaft l=1385		-	-	-	-	-	-	-	-	1
13.	1.379.586	Hexagonal shaft l=1093		-	-	-	-	-	-	2	2	-
14.	1.379.587	Hexagonal shaft l=600		-	-	-	-	-	-	2	2	-
15.	1.379.588	Hexagonal shaft l=1114		-	-	3	2	-	-	3	2	-
16.	1.379.589	Hexagonal shaft l=1030		-	-	-	-	2	2	-	-	-
17.	1.376.490	Spacer		8	8	8	8	12	12	10	10	12
18.	1.351.164	Clamp - half piece only		-	-	-	-	4	4	-	-	-
19.	72210000060	Spring washer M10-DIN128/A		16	16	16	16	24	24	20	20	28
20.	80210004066	Bolt - socket head M10x40 - DIN912/8.8		16	16	16	16	24	24	20	20	28
22.	1.354.663	Sprocket		-	-	8	8	12	12	12	12	16
22.	1.376.519	Sprocket		8	8	-	-	-	-	-	-	-
23.	80108001266	Set screw M8x12 - DIN916/8.8		8	8	8	8	12	12	12	12	16
24.	1.354.660	Disk		4	4	4	4	6	6	6	6	8
25.	1.355.403	Duplex chain t=1"		4	4	4	4	6	6	6	6	8
26.	84501000032	Connecting link t=1"		4	4	4	4	6	6	6	6	8
27.	1.355.909	Clamp - half piece only		16	16	16	16	20	20	20	20	28
28.	1.378.399	Hexagonal shaft l=579		-	-	1	1	-	-	-	-	-
29.	1.377.125	Hexagonal shaft l=1065		1	-	-	-	1	-	-	-	-

Note: item 1 includes items 17, 19, 20, 27
item 2 includes items 17, 18, 19, 20
item 3 includes items 22, 23, 24, 25, 26
item 4 includes items 18, 19, 20
item 21 includes items 19, 20, 27

Note: Models marked with * are non chopper headers!

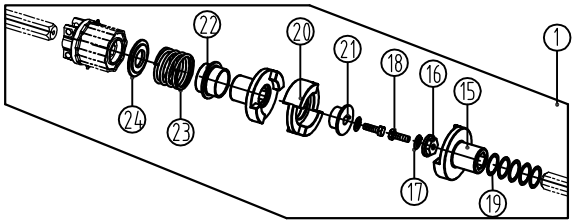

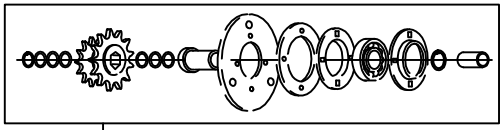

Lásd 9. o. 58-68 tételek
See pg. 9 items 58-68

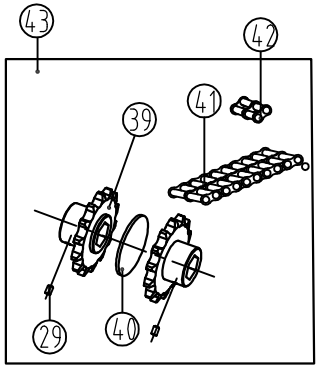

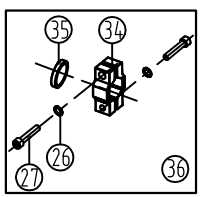

4+2R 70 cm / INT

1.377.814 1.377.814 1.377.815 | 1.377.814 1.377.815 1.377.815

4+2R 76.2-80cm / INT

1.377.814 1.377.815 1.377.815 | 1.377.814 1.377.814 1.377.815

4+2R 70-76.2-80cm / EXT

1.377.814 1.377.815 1.377.815 | 1.377.814 1.377.814 1.377.815

4+2x2R-76.2-80 / INT

1.377.814 1.377.814 1.377.815 1.377.815 | 1.377.814 1.377.814 1.377.815 1.377.815

4+2x2R-70 / INT

1.377.814 1.377.814 1.377.815 1.377.815 | 1.377.814 1.377.814 1.377.815 1.377.815

4+2x2R-70-76.2 -80/ EXT

1.377.814 1.377.814 1.377.815 1.377.815 | 1.377.814 1.377.814 1.377.815 1.377.815

5+2x2R-76.2 / INT

1.377.814 1.377.814 1.377.815 1.377.814 1.377.814 1.377.815 1.377.814 | 1.377.815 1.377.815

6+2x3R
70 / INT

1.377.814 1.377.814 1.377.814 1.377.814 1.377.815 1.377.815 | 1.377.814 1.377.814 1.377.815 1.377.815 1.377.815 1.377.815

6+2x3R
76.2 / INT

1.377.814 1.377.814 1.377.814 1.377.815 1.377.815 1.377.815 | 1.377.814 1.377.814 1.377.814 1.377.815 1.377.815 1.377.815

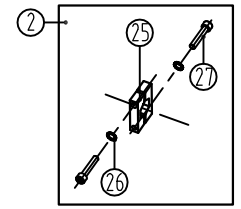

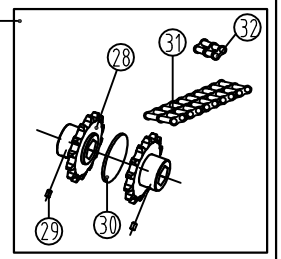

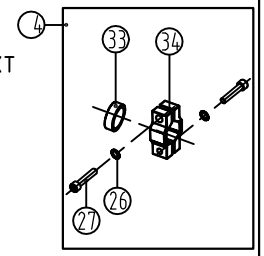

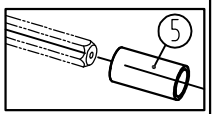

2017

SNAPPING UNIT DRIVE - FOLDING MODELS

Ref.	Part Number	Description		4+2R 70cm INT.	4+2R 70cm EXT.	4+2R 76,2cm INT.	4+2R 76,2cm EXT.	4+2 R 80cm INT.	4+2 R 80cm EXT.	4+2X2R 70cm INT.	4+2X2R 70cm EXT.	4+2X2R 76,2-80cm INT.	4+2X2R 76,2cm EXT.	4+2X2R 80cm EXT.	5+2X2R 76,2cm INT.	6+2x3R 70 cm INT.	6+2x3R 76,2cm INT.
5.	1.376.562	Spacer (l=231)		-	-	-	2	-	-	-	-	-	2	-	-	-	-
5.	1.377.123	Spacer (l=169)		-	2	-	-	-	-	-	2	-	-	-	-	-	-
5.	1.373.623	Spacer (l=269)	2015→	-	-	-	-	-	2	-	-	-	-	2	-	-	-
6.	1.377.812	Hexagonal shaft l=588		1	1	1	1	1	1	-	-	-	-	-	-	-	-
7.	1.376.516	Hexagonal shaft l=223		-	-	2	-	2	-	2	-	2	-	-	2	2	2
8.	1.376.506	Hexagonal shaft l=960		-	-	2	-	2	-	2	-	2	-	-	-	-	-
9.	1.376.503	Hexagonal shaft l=480		-	-	-	-	-	-	-	-	-	-	-	-	2	2
9.	1.376.517	Hexagonal shaft l=548		-	1	-	1	-	1	-	-	-	-	-	-	-	-
9.	1.377.813	Hexagonal shaft l=588		1	-	1	-	1	-	-	-	-	-	-	-	-	-
9.	1.377.508	Hexagonal shaft l=1720		-	-	-	-	-	-	-	-	-	-	-	1	-	-
10.	1.376.502	Hexagonal shaft l=1220		-	-	-	2	-	2	-	-	-	2	2	2	-	-
10.	1.377.125	Hexagonal shaft l=1065		-	2	-	-	-	-	-	2	-	-	-	-	-	-
10.	1.377.125	Hexagonal shaft l=1065	→2014	2	-	-	-	-	-	-	-	-	-	-	-	-	-
11.	1.377.809	Hexagonal shaft l=1350		-	-	-	-	-	-	-	-	1	1	1	1	-	-
11.	1.373.478	Hexagonal shaft l=1288	2015→	-	-	-	-	-	-	1	1	-	-	-	-	-	-
12.	1.378.398	Hexagonal shaft l=544		-	-	-	-	-	-	-	-	-	-	-	-	1	1
13.	1.378.399	Hexagonal shaft l=579		-	-	-	-	-	-	-	-	-	-	-	-	1	1
14.	1.379.588	Hexagonal shaft l=1114		-	-	-	-	-	-	-	-	-	-	-	-	2	-
14.	1.377.048	Hexagonal shaft l=1320		-	-	-	-	-	-	-	-	-	-	-	-	-	2
15.	1.377.808	Clutch half		4	4	4	4	4	4	4	4	4	4	4	4	4	4
16.	1.377.806	Inset		2	2	2	2	2	2	2	2	2	2	2	2	2	2
17.	71701000060	External tab washer		4	4	4	4	4	4	4	4	4	4	4	4	4	4
18.	79410003066	Hex bolt M10x30 - DIN933/8.8		4	4	4	4	4	4	4	4	4	4	4	4	4	4
19.	71637047100	Shim 37x47x1 - DIN988		10	-	10	-	10	-	10	-	10	-	-	10	10	10
20.	1.377.804	Inset		2	2	2	2	2	2	2	2	2	2	2	2	2	2
21.	1.377.805	Inset		2	2	2	2	2	2	2	2	2	2	2	2	2	2
22.	1.377.807	Spacer (l=44)		2	2	2	2	2	2	2	2	2	2	2	2	2	2
23.	1.351.215	Spring		2	2	2	2	2	2	2	2	2	2	2	2	2	2
24.	1.351.163	Disk		2	2	2	2	2	2	2	2	2	2	2	2	2	2
25.	1.351.164	Clamp - half piece only		-	4	4	4	4	4	4	4	4	-	-	4	4	4
26.	72210000060	Spring washer M10 - DIN128/A		14	12	18	12	12	12	14	16	20	16	16	20	28	28
27.	80210004066	Bolt - socket head M10x40 - DIN912/8.8		14	12	18	12	12	12	14	16	20	16	16	20	28	28
28.	1.376.519	Sprocket		-	-	4	-	4	-	4	-	4	-	-	4	8	8
29.	80108001266	Set screw M8x12 - DIN916/8.8		-	-	4	-	4	-	4	-	4	-	-	4	12	12
30.	1.354.660	Disk		-	-	2	-	2	-	2	-	2	-	-	2	4	4
31.	1.355.403	Duplex chain t=1"		-	-	2	-	2	-	2	-	2	-	-	2	4	4
32.	84501000032	Connecting link t=1"		-	-	2	-	2	-	2	-	2	-	-	2	4	4
33.	1.376.490	Spacer (l=15)		3	3	7	5	7	5	8	8	8	8	8	8	12	12
34.	1.355.909	Clamp - half piece only		14	8	14	8	14	8	16	16	16	16	16	16	24	24

Note: item 1 includes items 15-24 (1.378.427)
item 2 includes items 25-27
item 3 includes items 28-32
item 4 includes items 26, 27, 33, 34
item 36 includes items 26, 27, 34, 35

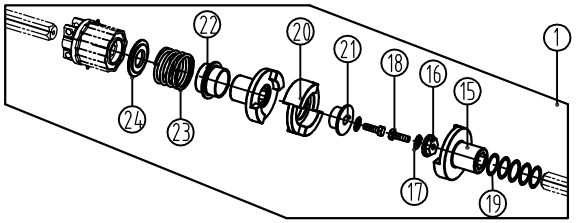

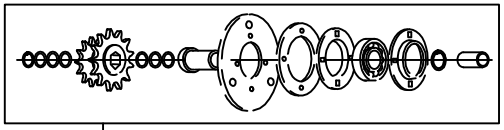

Lásd 9. o. 58-68 tételek
See pg. 9 items 58-68

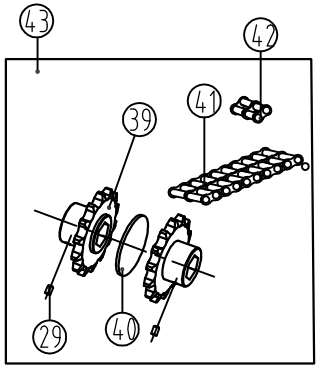

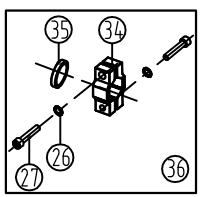

4+2R 70 cm / INT

1.377.814 1.377.814 1.377.815 | 1.377.814 1.377.815 1.377.815

4+2R 76.2-80cm / INT

1.377.814 1.377.815 1.377.815 | 1.377.814 1.377.814 1.377.815

4+2R 70-76.2-80cm / EXT

1.377.814 1.377.815 1.377.815 | 1.377.814 1.377.814 1.377.815

4+2x2R-76.2-80 / INT

1.377.814 1.377.814 1.377.815 1.377.815 | 1.377.814 1.377.814 1.377.815 1.377.815

4+2x2R-70 / INT

1.377.814 1.377.814 1.377.815 1.377.815 | 1.377.814 1.377.814 1.377.815 1.377.815

4+2x2R-70-76.2 -80/ EXT

1.377.814 1.377.814 1.377.815 1.377.815 | 1.377.814 1.377.814 1.377.815 1.377.815

5+2x2R-76.2 / INT

1.377.814 1.377.814 1.377.815 1.377.814 1.377.814 1.377.815 1.377.814 | 1.377.815 1.377.815

6+2x3R
70 / INT

1.377.814 1.377.814 1.377.814 1.377.814 1.377.815 1.377.815 | 1.377.814 1.377.814 1.377.815 1.377.815 1.377.815 1.377.815

6+2x3R
76.2 / INT

1.377.814 1.377.814 1.377.814 1.377.815 1.377.815 1.377.815 | 1.377.814 1.377.814 1.377.814 1.377.815 1.377.815 1.377.815

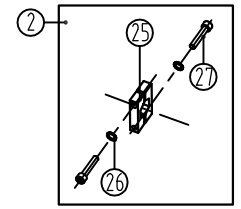

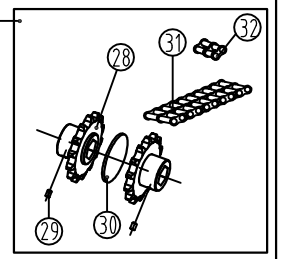

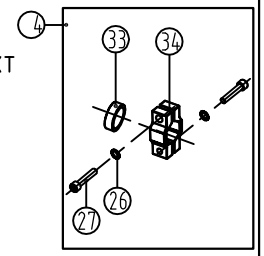

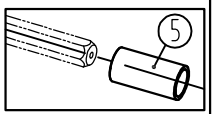

2017

SNAPPING UNIT DRIVE - FOLDING MODELS

Ref.	Part Number	Description		4+2R 70cm INT.	4+2R 70cm EXT.	4+2R 76,2cm INT.	4+2R 76,2cm EXT.	4+2 R 80cm INT.	4+2 R 80cm EXT.	4+2X2R 70cm INT.	4+2X2R 70cm EXT.	4+2X2R 76,2-80cm INT.	4+2X2R 76,2cm EXT.	4+2X2R 80cm EXT.	5+2X2R 76,2cm INT.	6+2x3R 70 cm INT.	6+2x3R 76,2cm INT.
35.	1.377.676	Spacer (l=5)	→2014	2	-	-	-	-	-	-	-	-	-	-	-	-	-
35.	1.377.676	Spacer (l=5)		-	2	-	-	-	-	-	-	-	-	-	-	-	-
37.	1.377.810	Hexagonal shaft l=1260		-	-	-	-	-	-	1	1	1	1	1	-	-	-
38.	1.373.890	Hexagonal shaft l=1436		-	-	-	-	-	-	-	-	-	-	-	-	2	-
38.	1.378.400	Hexagonal shaft l=1360	→2009	-	-	-	-	-	-	-	-	-	-	-	-	-	1
38.	1.378.400	Hexagonal shaft l=1560	2010→	-	-	-	-	-	-	-	-	-	-	-	-	-	2
39.	1.378.897	Sprocket	2012.→	-	-	-	-	-	-	-	-	-	-	-	-	4	4
40.	1.378.896	Disk	2012.→	-	-	-	-	-	-	-	-	-	-	-	-	2	2
41.	1.300.200	Duplex chain t=3/4"	2012.→	-	-	-	-	-	-	-	-	-	-	-	-	2	2
42.	84503400010	Connecting link t=3/4"	2012.→	-	-	-	-	-	-	-	-	-	-	-	-	2	2

Note: item 1 includes items 15-24 (1.378.427)
item 2 includes items 25-27
item 3 includes items 28-32
item 4 includes items 26, 27, 33, 34
item 36 includes items 26, 27, 34, 35

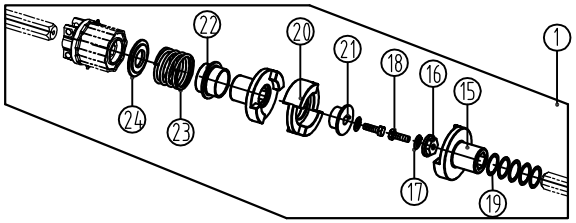

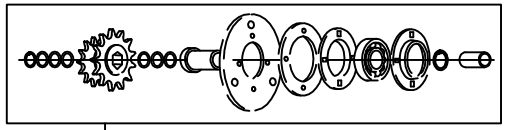

Lásd 9. o. 58-68 tételek
See pg. 9 items 58-68

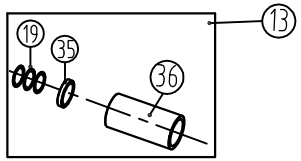

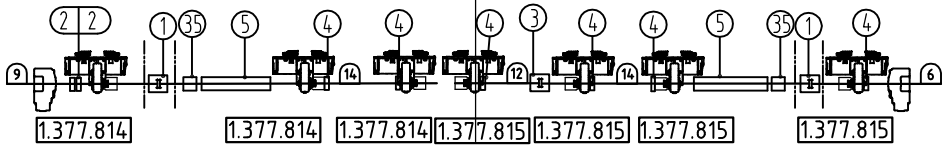

5+2R-60/ EXT

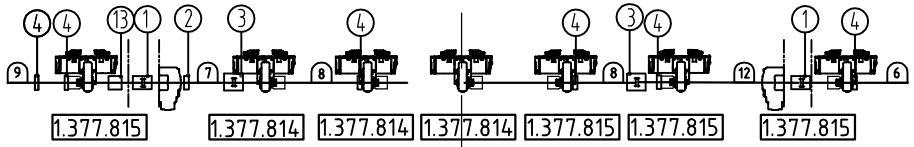

5+2R-60 / INT

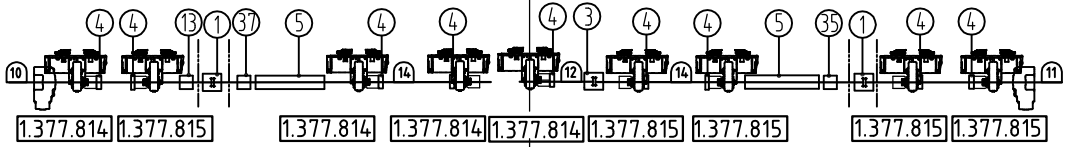

5+2x2R-60/ EXT

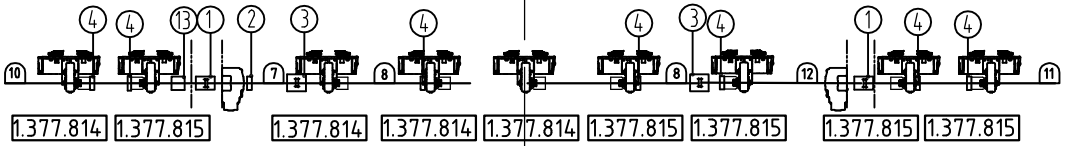

5+2x2R-60 / INT

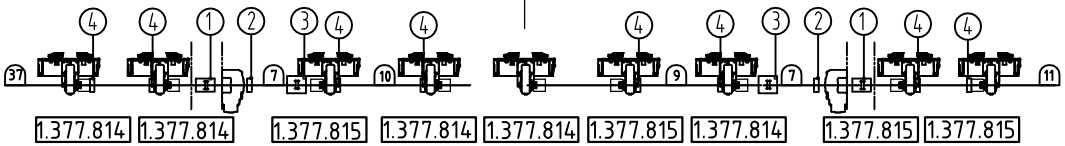

5+2x2R-76.2 / INT

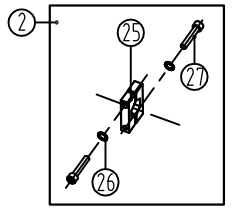

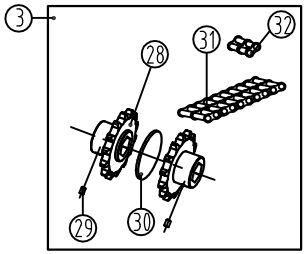

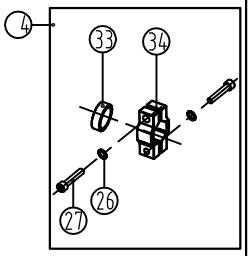

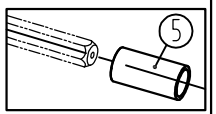

2018

SNAPPING UNIT DRIVE - FOLDING MODELS 5+2R, 5+2x2R

Ref.	Part Number	Description		5+2R 60cm INT.	5+2R 60cm EXT.	5+2X2R 60cm INT.	5+2X2R 60cm EXT.	5+2X2R 76,2cm INT.
5.	1.377.123	Spacer (l=169)		-	2	-	2	-
6.	1.377.812	Hexagonal shaft l=588		1	1	-	-	-
7.	1.376.516	Hexagonal shaft l=223		-	-	1	-	2
8.	1.376.506	Hexagonal shaft l=960		2	-	2	-	-
9.	1.376.517	Hexagonal shaft l=548		1	1	-	-	-
9.	1.377.508	Hexagonal shaft l=1720		-	-	-	-	1
10.	1.376.502	Hexagonal shaft l=1220		-	-	-	-	2
10.	1.377.125	Hexagonal shaft l=1065		-	-	1	2	-
11.	1.377.809	Hexagonal shaft l=1350		-	-	-	-	1
11.	1.372.192	Hexagonal shaft l=1188		-	-	1	1	-
12.	1.378.398	Hexagonal shaft l=544		1	1	1	1	-
14.	1.379.588	Hexagonal shaft l=1114		-	2	-	2	-
15.	1.377.808	Clutch half		4	4	4	4	4
16.	1.377.806	Inset		2	2	2	2	2
17.	71701000060	External tab washer		4	4	4	4	4
18.	79410003066	Hex bolt M10x30 - DIN933/8.8		4	4	4	4	4
19.	71637047100	Shim 37x47x1 - DIN988		10	10	10	10	10
20.	1.377.804	Inset		2	2	2	2	2
21.	1.377.805	Inset		2	2	2	2	2
22.	1.377.807	Spacer (l=44)		2	2	2	2	2
23.	1.351.215	Spring		2	2	2	2	2
24.	1.351.163	Disk		2	2	2	2	2
25.	1.351.164	Clamp - half piece only		2	4	4	-	4
26.	72210000060	Spring washer M10 - DIN128/A		14	16	14	18	20
27.	80210004066	Bolt - socket head M10x40 - DIN912/8.8		14	16	14	18	20
28.	1.376.519	Sprocket		4	2	4	2	4
29.	80108001266	Set screw M8x12 - DIN916/8.8		4	2	4	2	4
30.	1.354.660	Disk		2	1	2	1	2
31.	1.355.403	Duplex chain t=1"		2	1	2	1	2
32.	84501000032	Connecting link t=1"		2	1	2	1	2
33.	1.376.490	Spacer (l=15)		6	6	7	9	8
34.	1.355.909	Clamp - half piece only		12	12	14	18	16
35.	1.377.676	Spacer (l=5)		1	2	1	2	-
36.	1.354.565	Spacer (l=76)		1	-	1	1	-
37.	1.354.076	Spacer (l=40)			-	-	1	-

Note: item 1 includes items 15-24 (1.378.427)
item 2 includes items 25-27
item 3 includes items 28-32
item 4 includes items 26, 27, 33, 34
item 13 includes items 19, 35, 36

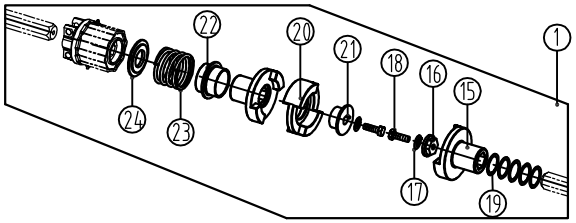

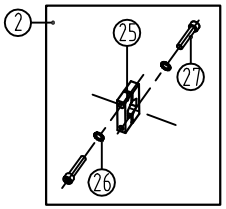

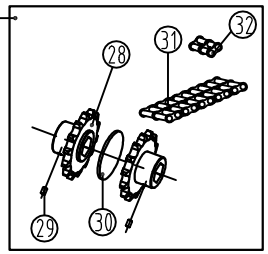

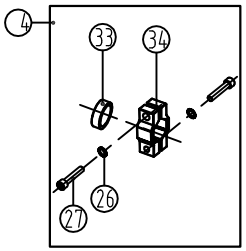

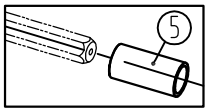

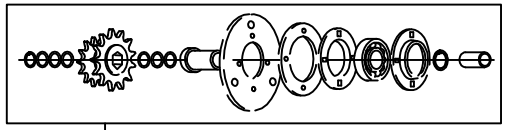

Lásd 9. o. 58-68 tételek
See pg. 9 items 58-68

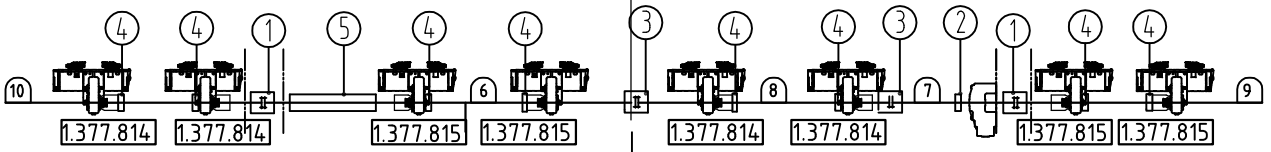

4+2x2R-76.2 Special Gleaner/INT

2020

SNAPPING UNIT DRIVE - EIGHT ROW FOLDING MODEL, GLEANER

Ref.	Part Number	Description		4+2X2R 76,2cm INT.
5.	1.376.562	Spacer (l=169)		1
6.	1.379.419	Hexagonal shaft l=1700		1
7.	1.376.516	Hexagonal shaft l=223		1
8.	1.372.934	Hexagonal shaft l=1523		1
9.	1.377.809	Hexagonal shaft l=1350		1
10.	1.377.810	Hexagonal shaft l=1260		1
15.	1.377.808	Clutch half		4
16.	1.377.806	Inset		2
17.	71701000060	External tab washer		4
18.	79410003066	Hex bolt M10x30 - DIN933/8.8		4
19.	71637047100	Shim 37x47x1 - DIN988		10
20.	1.377.804	Inset		2
21.	1.377.805	Inset		2
22.	1.377.807	Spacer (l=44)		2
23.	1.351.215	Spring		2
24.	1.351.163	Disk		2
25.	1.351.164	Clamp - half piece only		2
26.	72210000060	Spring washer M10 - DIN128/A		20
27.	80210004066	Bolt - socket head M10x40 - DIN912/8.8		20
28.	1.376.519	Sprocket		2
29.	80108001266	Set screw M8x12 - DIN916/8.8		2
30.	1.354.660	Disk		1
31.	1.355.403	Duplex chain t=1"		1
32.	84501000032	Connecting link t=1"		1
33.	1.376.490	Spacer (l=15)		8
34.	1.355.909	Clamp - half piece only		16

Note: item 1 includes items 15-24 (1.378.427)
item 2 includes items 25-27
item 2 includes items 25-27
item 3 includes items 28-32
item 4 includes items 26, 27, 33, 34

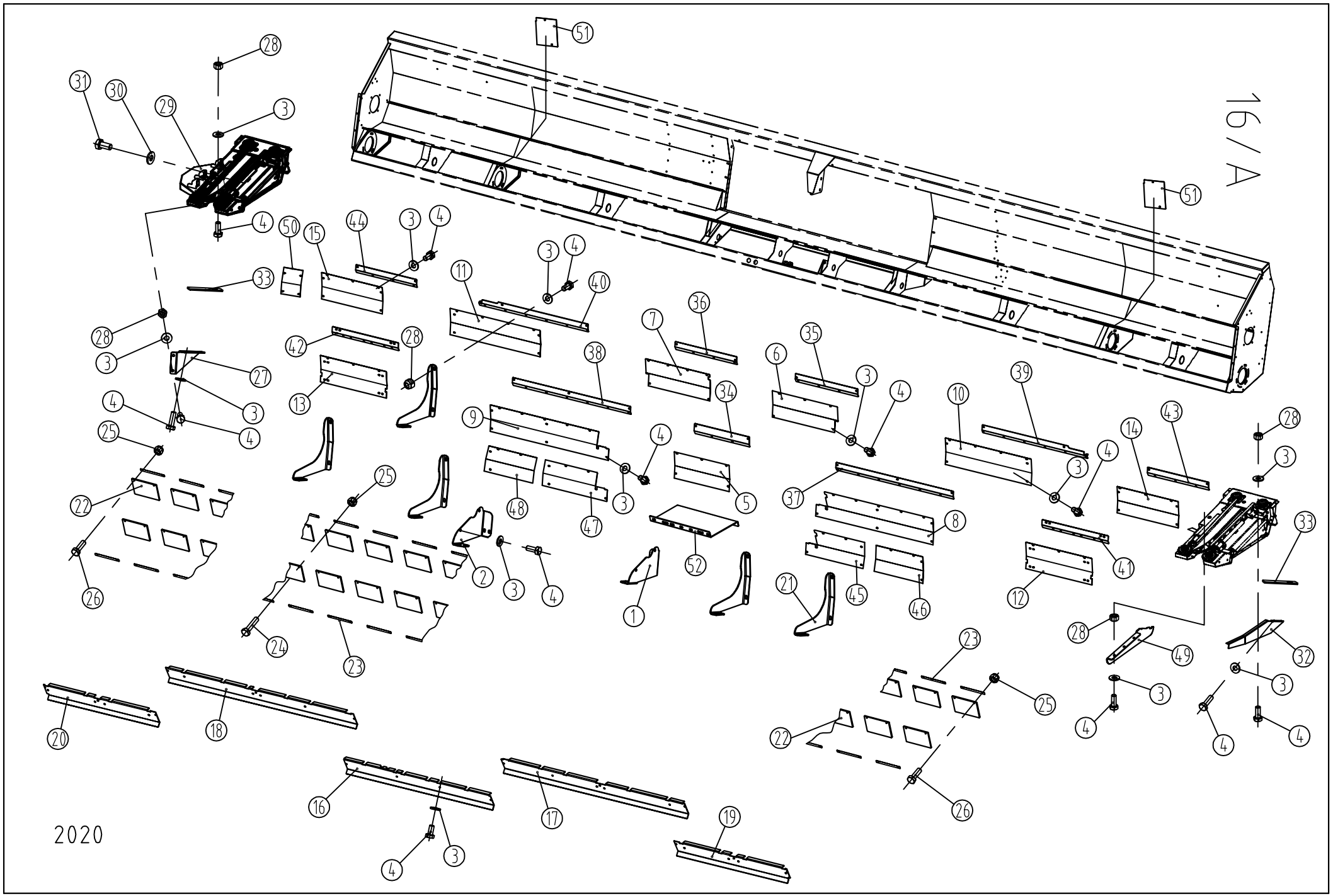
16/A
2020

DRIVE-SHIELDS - RIGID (2010→)

Ref.	Part Number	Description		6R 70cm	6R 76.2cm	8R 70cm	8R 76.2cm	8R 96.5cm	12R 70 cm	12R 76.2cm
1.	1.377.364	Bracket - LH	→2015	1	1	1	1	1	1	1
2.	1.377.365	Bracket - RH	→2015	1	1	1	1	1	1	1
3.	91623938761	Spring washer - A8		124	124	168	168	156	257	257
4.	79408002066	Hex bolt -M8x20 - DIN933/8.8		81	81	107	107	98	164	164
5.	1.378.296	Shield - back (l=536)	→2015	1	1	1	1	-	1	1
5.	1.378.972	Shield - back (l=1572)	2016→	1	1	1	1	-	1	1
5.	1.372.767	Shield - back (l=1808)		-	-	-	-	1	-	-
6.	1.378.297	Shield - back (l=635)	→2015	1	1	1	1	-	1	1
7.	1.378.298	Shield - back (l=627)	→2015	1	1	1	1	-	1	1
8.	1.378.360	Shield - back (l=934)	→2015	1	-	-	-	-	-	-
8.	1.373.157	Shield - back (l=1197)	2016→	1	-	-	-	-	-	-
8.	1.378.299	Shield - back (l=1089)	→2015	-	1	-	-	-	-	-
8.	1.379.423	Shield - back (l=1352)	2016→	-	1	-	-	-	-	-
8.	1.378.301	Shield - back (l=1143)	→2015	-	-	1	1	-	-	-
8.	1.373.169	Shield - back (l=1897)	2016→	-	-	1	-	-	-	-
8.	1.379.748	Shield - back (l=2114)	2016→	-	-	-	1	-	-	-
9.	1.378.361	Shield - back (l=977)	→2015	1	-	-	-	-	-	-
9.	1.373.158	Shield - back (l=1232)	2016→	1	-	-	-	-	-	-
9.	1.378.300	Shield - back (l=1132)	→2015	-	1	-	-	-	-	-
9.	1.379.424	Shield - back (l=1387)	2016→	-	1	-	-	-	-	-
9.	1.378.302	Shield - back (l=1151)	→2015	-	-	1	1	-	-	-
9.	1.373.170	Shield - back (l=1932)	2016→	-	-	1	-	-	-	-
9.	1.379.749	Shield - back (l=2149)	2016→	-	-	-	1	-	-	-
10.	1.378.307	Shield - back (l=837)	→2015	-	-	-	-	-	-	1
10.	1.378.969	Shield - back (l=1427)	2016→	-	-	-	-	-	-	1
10.	1.378.799	Shield - back (l=588)	→2015	-	-	-	-	-	1	-
10.	1.373.139	Shield - back (l=2062)	2016→	-	-	-	-	-	1	-
10.	1.372.768	Shield - back (l=2017)		-	-	-	-	1	-	-
11.	1.378.308	Shield - back (l=877)	→2015	-	-	-	-	-	-	1
11.	1.378.975	Shield - back (l=1427)	2016→	-	-	-	-	-	-	1
11.	1.378.791	Shield - back (l=623)	→2015	-	-	-	-	-	1	-
11.	1.373.141	Shield - back (l=2097)	2016→	-	-	-	-	-	1	-
11.	1.372.769	Shield - back (l=2017)		-	-	-	-	1	-	-
12.	1.378.305	Shield - back (l=644)	→2015	-	-	-	1	-	-	1
12.	1.378.964	Shield - back (l=882)	2016→	-	-	-	-	-	-	1
12.	1.378.800	Shield - back (l=556)	→2015	-	-	-	-	-	1	-
12.	1.373.140	Shield - back (l=1232)	2016→	-	-	-	-	-	1	-
12.	1.372.770	Shield - back (l=679)		-	-	-	-	1	-	-
13.	1.378.306	Shield - back (l=679)	→2015	-	-	-	1	-	-	-
13.	1.378.305	Shield - back (l=644)	→2015	-	-	-	-	-	-	1
13.	1.378.970	Shield - back (l=882)	2016→	-	-	-	-	-	-	1
13.	1.378.793	Shield - back (l=521)	→2015	-	-	-	-	-	1	-
13.	1.373.142	Shield - back (l=1232)	2016→	-	-	-	-	-	1	-
13.	1.372.771	Shield - back (l=714)		-	-	-	-	1	-	-
14.	1.378.303	Shield - back (l=427)	→2015	-	-	1	-	-	-	-
14.	1.378.309	Shield - back (l=597)	→2015	-	-	-	-	-	-	1
14.	1.378.963	Shield - back (l=1324)	2016→	-	-	-	-	-	-	1
14.	1.378.802	Shield - back (l=595)	→2015	-	-	-	-	-	1	-
15.	1.378.304	Shield - back (l=462)	→2015	-	-	1	-	-	-	-
15.	1.378.310	Shield - back (l=592)	→2015	-	-	-	-	-	-	1
15.	1.378.971	Shield - back (l=1359)	2016→	-	-	-	-	-	-	1
15.	1.378.796	Shield - back (l=628)	→2015	-	-	-	-	-	1	-
16.	1.377.341	Shield - bottom (l=1758)	→2015	1	-	1	-	-	1	-
16.	1.373.143	Shield - bottom (l=1577)	2016→	1	-	1	-	-	1	-

Note: the items marked with * are only valid for machines with chopper!
The items marked with ** are only valid for machines without a chopper!
2016-> : only for machines with higher serial number than xxxxx16xxx

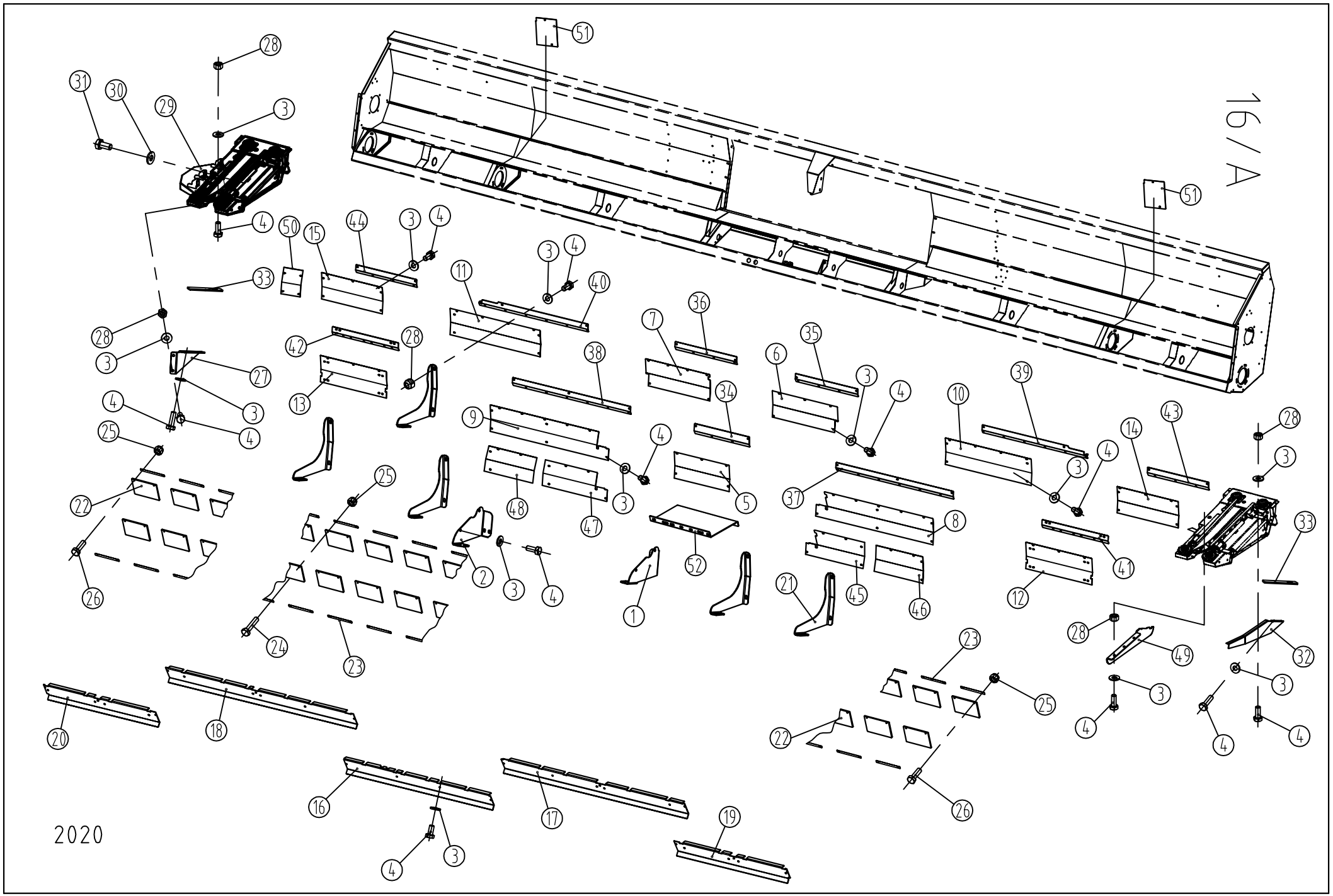
16/A
2020

DRIVE-SHIELDS - RIGID (2010→)

Ref.	Part Number	Description		6R 70cm	6R 76.2cm	8R 70cm	8R 76.2cm	8R 96.5cm	12R 70 cm	12R 76.2cm
16.	1.377.338	Shield - bottom (l=1758)	→2015	-	1	-	1	-	-	1
16.	1.378.978	Shield - bottom (l=1577)	2016→	-	1	-	1	-	-	1
16.	1.372.745	Shield - bottom (l=1813)		-	-	-	-	1	-	-
17.	1.377.346	Shield - bottom (l=2205)	→2015	-	-	-	-	-	-	1
17.	1.378.979	Shield - bottom (l=1423)	2016→	-	-	-	-	-	-	1
17.	1.378.805	Shield - bottom (l=1959)	→2015	-	-	-	-	-	1	-
17.	1.373.146	Shield - bottom (l=1321)	2016→	-	-	-	-	-	1	-
17.	1.372.765	Shield - bottom (l=2719)		-	-	-	-	1	-	-
18.	1.377.347	Shield - bottom (l=2253)	→2015	-	-	-	-	-	-	1
18.	1.378.977	Shield - bottom (l=1427)	2016→	-	-	-	-	-	-	1
18.	1.378.804	Shield - bottom (l=2002)	→2015	-	-	-	-	-	1	-
18.	1.373.144	Shield - bottom (l=1355)	2016→	-	-	-	-	-	1	-
18.	1.372.766	Shield - bottom (l=2757)		-	-	-	-	1	-	-
19.	1.377.558	Shield - bottom (l=1116)	→2015	1	-	-	-	-	-	-
19.	1.373.156	Shield - bottom (l=1209)	2016→	1	-	-	-	-	-	-
19.	1.377.339	Shield - bottom (l=1271)	→2015	-	1	-	-	-	-	-
19.	1.379.422	Shield - bottom (l=1364)	2016→	-	1	-	-	-	-	-
19.	1.377.342	Shield - bottom (l=1816)	→2015	-	-	1	-	-	-	-
19.	1.373.168	Shield - bottom (l=1909)	2016→	-	-	1	-	-	-	-
19.	1.377.344	Shield - bottom (l=2033)	→2015	-	-	-	1	-	-	-
19.	1.379.750	Shield - bottom (l=2126)	2016→	-	-	-	1	-	-	-
19.	1.377.348	Shield - bottom (l=1350)	→2015	-	-	-	-	-	-	1
19.	1.378.980	Shield - bottom (l=2225)	2016→	-	-	-	-	-	-	1
19.	1.378.806	Shield - bottom (l=1255)	→2015	-	-	-	-	-	1	-
19.	1.373.147	Shield - bottom (l=1986)	2016→	-	-	-	-	-	1	-
20.	1.377.559	Shield - bottom (l=1159)	→2015	1	-	-	-	-	-	-
20.	1.373.155	Shield - bottom (l=1247)	2016→	1	-	-	-	-	-	-
20.	1.377.340	Shield - bottom (l=1314)	→2015	-	1	-	-	-	-	-
20.	1.379.421	Shield - bottom (l=1402)	2016→	-	1	-	-	-	-	-
20.	1.377.343	Shield - bottom (l=1859)	→2015	-	-	1	-	-	-	-
20.	1.373.167	Shield - bottom (l=1947)	2016→	-	-	1	-	-	-	-
20.	1.377.345	Shield - bottom (l=2076)	→2015	-	-	-	1	-	-	-
20.	1.379.751	Shield - bottom (l=2164)	2016→	-	-	-	1	-	-	-
20.	1.377.349	Shield - bottom (l=1345)	→2015	-	-	-	-	-	-	1
20.	1.378.976	Shield - bottom (l=2259)	2016→	-	-	-	-	-	-	1
20.	1.378.807	Shield - bottom (l=1255)	→2015	-	-	-	-	-	1	-
20.	1.373.145	Shield - bottom (l=1990)	2016→	-	-	-	-	-	1	-
21.	1.377.362	Stiffener - LH	→2015	2	2	4	4	4	6	6
21.	1.377.363	Stiffener - RH	→2015	2	2	4	4	4	6	6
21.	1.378.973	Stiffener - LH	2016→	2	2	3	3	2	3	4
21.	1.378.974	Stiffener - RH	2016→	2	2	3	3	2	3	4
22.*	1.376.131	Rubber plate		20	20	28	28	36	40	44
23.*	1.376.127	Flat		20	20	28	28	36	40	44
24.*	79408003566	Hex bolt-M8x35 - DIN933/8.8		19	19	27	27	35	39	43
25.*	74900800066	Hex nut - plastic insert M8 - DIN982		21	21	29	29	35	41	45
26.*	79408002566	Hex bolt-M8x25 - DIN933/8.8		2	2	2	2	2	2	2
27.*	1.376.599	Stiffener		1	1	1	1	1	1	1
28.	73508000066	Hex nut - M8 - DIN934		53	53	71	71	76	105	105
29.*	1.376.007	Knife-shield	→2012	1	1	1	1	1	1	1
29.*	1.379.099	Knife-shield	2013→	1	1	1	1	1	1	1
30.*	91623938861	Spring washer- A10		6	6	6	6	6	6	6
31.*	79410002066	Hex bolt -M10x20 - DIN933/8.8		6	6	6	6	6	6	6
32.*	1.376.600	Side-shield		1	1	1	1	1	1	1
33.	1.377.372	Spacer		2	2	2	2	2	2	2

Note: the items marked with * are only valid for machines with chopper!
The items marked with ** are only valid for machines without a chopper!
2016-> : only for machines with higher serial number than xxxxx16xxx

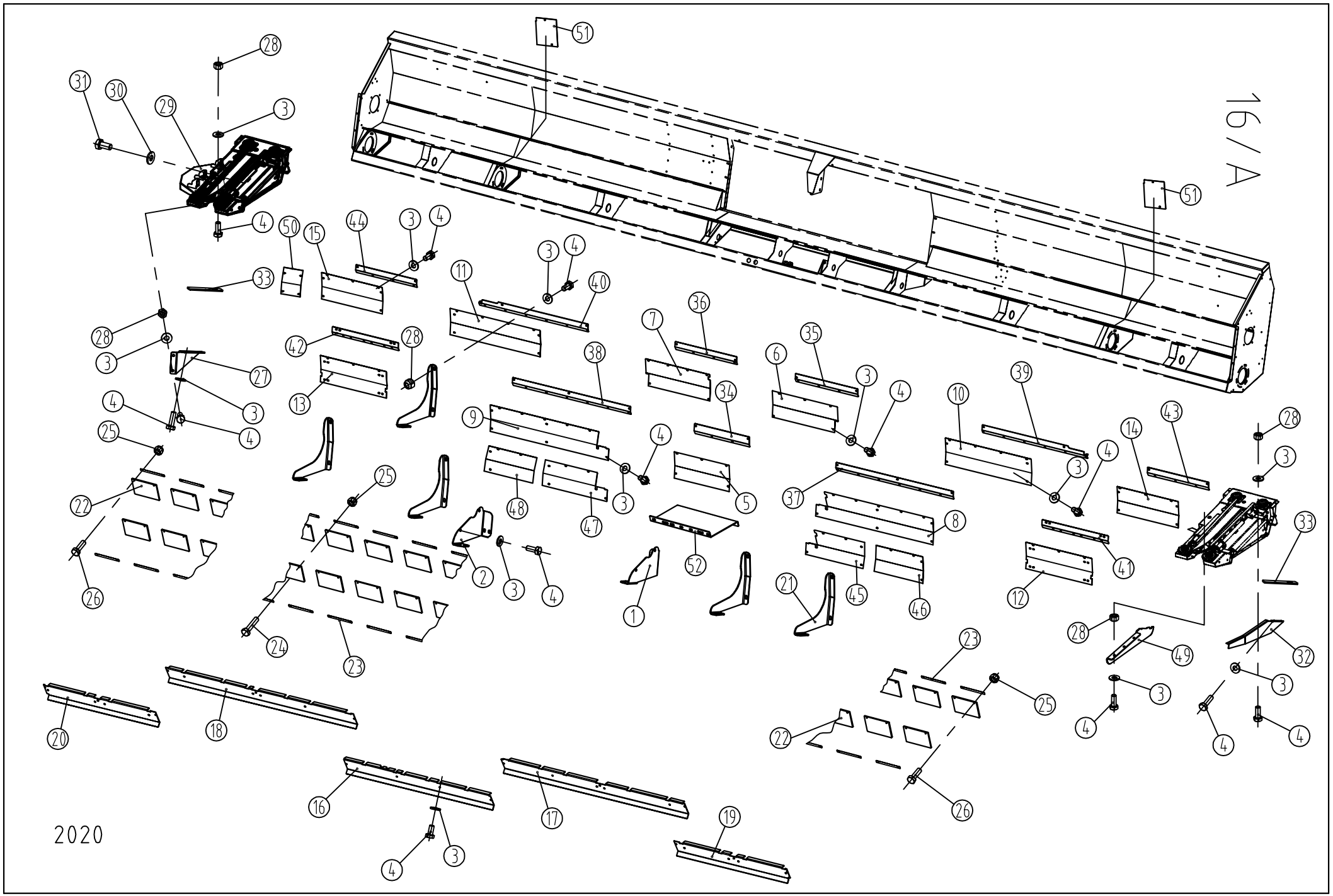
16/A
2020

DRIVE-SHIELDS - RIGID (2010→)

Ref.	Part Number	Description		6R 70cm	6R 76.2cm	8R 70cm	8R 76.2cm	8R 96.5cm	12R 70 cm	12R 76.2cm
34.	1.377.864	Stiffener plate (l=536)		1	1	1	1	-	1	1
35.	1.377.865	Stiffener plate (l=608)		1	1	1	1	-	1	1
36.	1.377.866	Stiffener plate (l=600)		1	1	1	1	-	1	1
37.	1.377.871	Stiffener plate (l=1143)		-	-	1	1	-	-	-
37.	1.378.764	Stiffener plate (l=1175)	2011→	-	-	-	-	-	1	1
37.	1.377.869	Stiffener plate (l=1120)		1	-	-	-	-	-	-
37.	1.377.867	Stiffener plate (l=1275)		-	1	-	-	-	-	-
38.	1.377.872	Stiffener plate (l=1151)		-	-	1	1	-	-	-
38.	1.377.872	Stiffener plate (l=1151)	2010.	-	-	-	-	-	-	1
38.	1.378.765	Stiffener plate (l=1183)	2011→	-	-	-	-	-	1	1
38.	1.377.870	Stiffener plate (l=1163)		1	-	-	-	-	-	-
38.	1.377.868	Stiffener plate (l=1318)		-	1	-	-	-	-	-
39.	1.377.877	Stiffener plate (l=774)		-	-	-	-	-	-	1
39.	1.378.798	Stiffener plate (l=1023)	2011→	-	-	-	-	-	1	-
40.	1.377.878	Stiffener plate (l=1063)		-	-	-	-	-	-	1
40.	1.378.792	Stiffener plate (l=809)	2011→	-	-	-	-	-	1	-
41.	1.377.875	Stiffener plate (l=644)		-	-	-	-	-	-	1
41.	1.377.876	Stiffener plate (l=865)		-	-	-	1	-	-	-
41.	1.378.801	Stiffener plate (l=556)	2011→	-	-	-	-	-	1	-
42.	1.377.875	Stiffener plate (l=644)		-	-	-	-	-	-	1
42.	1.378.060	Stiffener plate (l=830)		-	-	-	1	-	-	-
42.	1.378.795	Stiffener plate (l=521)	2011→	-	-	-	-	-	1	-
43.	1.377.879	Stiffener plate (l=597)		-	-	-	-	-	-	1
43.	1.377.873	Stiffener plate (l=613)		-	-	1	-	-	-	-
43.	1.378.803	Stiffener plate (l=595)	2011→	-	-	-	-	-	1	-
44.	1.377.880	Stiffener plate (l=592)		-	-	-	-	-	-	1
44.	1.377.874	Stiffener plate (l=648)		-	-	1	-	-	-	-
44.	1.378.797	Stiffener plate (l=628)	2011→	-	-	-	-	-	1	-
45.	1.378.340	Stiffener plate (l=520)		-	-	-	-	-	1	1
46.	1.378.751	Stiffener plate (l=621)		-	-	-	-	-	1	1
47.	1.378.341	Stiffener plate (l=527)		-	-	-	-	-	1	1
48.	1.378.752	Stiffener plate (l=621)		-	-	-	-	-	1	1
49.*	1.379.534	Deflector plate	2014→	5	5	7	7	11	11	11
50.**	1.379.708	Shield	2015→	1	1	1	1	1	1	1
51.**	1.373.619	Shield	2016→	1	1	1	1	-	-	-
51.**	1.372.684	Shield		-	-	-	-	1	1	1
52.**	1.372.937	Shield	2020→	1	1	1	1	1	1	1

Note: the items marked with * are only valid for machines with chopper!
The items marked with ** are only valid for machines without a chopper!
2016-> : only for machines with higher serial number than xxxxx16xxx

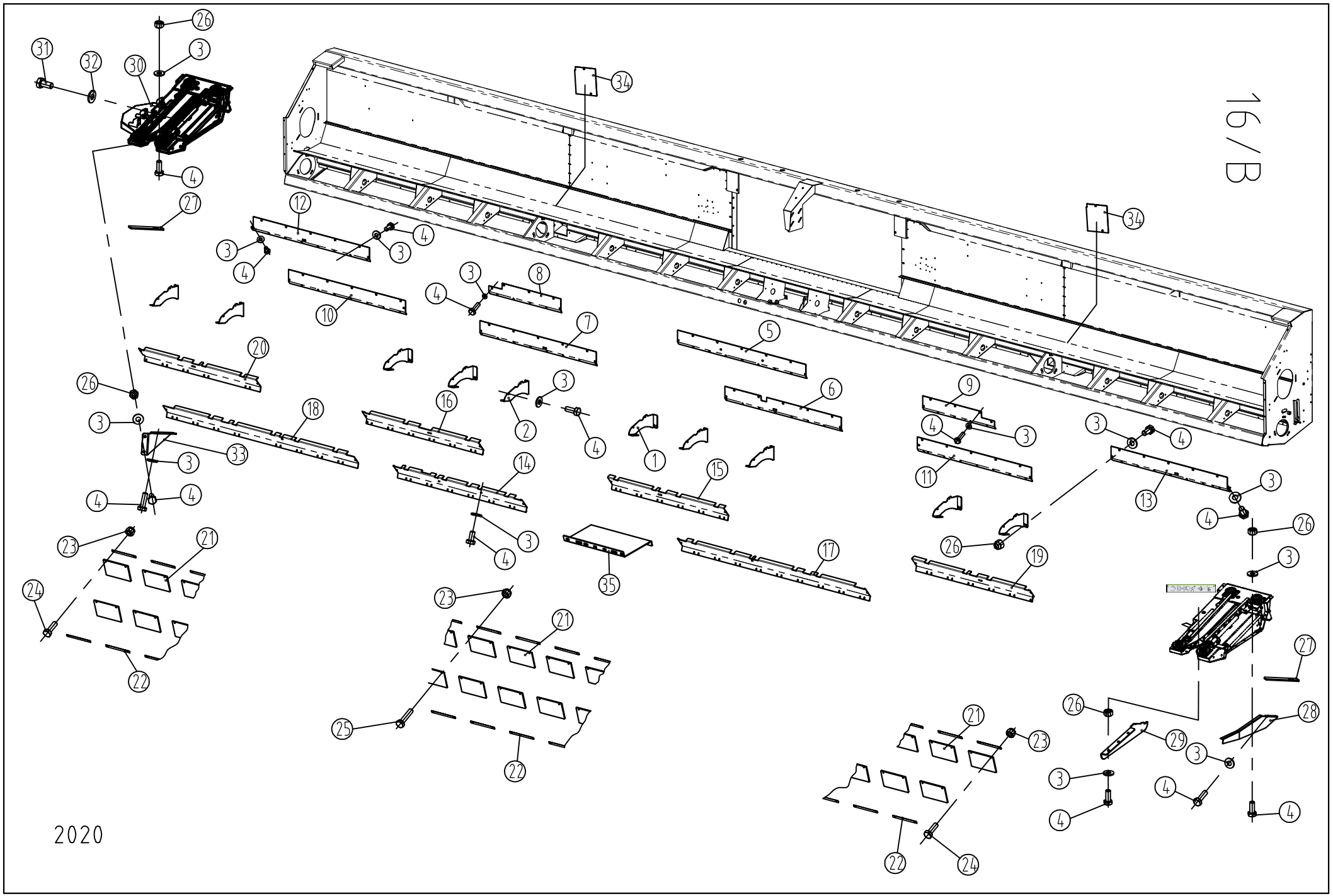
16/B
2020

DRIVE-SHIELDS - RIGID (2014→)

Ref.	Part Number	Description		8R 50cm	8R 56cm	12R 50cm	12R 56cm	16R 76,2cm
1.	1.378.973	Bracket - LH		2	2	3	2	5
2.	1.378.974	Bracket - RH		2	2	3	2	5
3.	91623938761	Spring washer - A8		130	130	164	174	277
4.	79408002066	Hex bolt M8x20 - DIN933/8.8		77	78	96	104	172
5.	1.378.972	Shield - back (l=1572)		-	-	-	-	1
5.	1.379.644	Shield - back (l=1397)		1	-	1	-	-
5.	1.379.590	Shield - back (l=1498)		-	1	-	1	-
6.	1.378.969	Shield - back (l=1427)		-	-	-	-	1
6.	1.379.645	Shield - back (l=2328)		-	-	1	-	-
6.	1.379.591	Shield - back (l=1312)		-	1	-	1	-
6.	1.373.113	Shield - back (l=1483,5)		1	-	-	-	-
7.	1.378.975	Shield - back (l=1427)		-	-	-	-	1
7.	1.379.646	Shield - back (l=2364)		-	-	1	-	-
7.	1.379.592	Shield - back (l=1438,5)		-	1	-	1	-
7.	1.373.114	Shield - back (l=1348)		1	-	-	-	-
8.	1.378.970	Shield - back (l=882)		-	-	-	-	1
8.	1.379.594	Shield - back (l=1106)		-	-	-	1	-
9.	1.378.964	Shield - back (l=882)		-	-	-	-	1
9.	1.379.593	Shield - back (l=1106)		-	-	-	1	-
10.	1.379.035	Shield - back (l=1434)		-	-	-	-	1
11.	1.379.034	Shield - back (l=1399)		-	-	-	-	1
12.	1.379.036	Shield - back (l=1447)		-	-	-	-	1
13.	1.379.037	Shield - back (l=1447)		-	-	-	-	1
14.	1.378.978	Shield - bottom (l=1577)		-	-	-	-	1
14.	1.379.647	Shield - bottom (l=1398)		1	-	1	-	-
14.	1.379.595	Shield - bottom l=1498)		-	1	-	1	-
15.	1.378.979	Shield - bottom (l=1423)		-	-	-	-	1
15.	1.379.648	Shield - bottom (l=2344)		-	-	1	-	-
15.	1.379.596	Shield - bottom (l=853)		-	-	-	1	-
15.	1.373.115	Shield - bottom (l=1328)		1	-	-	-	-
15.	1.373.082	Shield - bottom (l=1496)		-	1	-	-	-
16.	1.378.977	Shield - bottom (l=1427)		-	-	-	-	1
16.	1.379.649	Shield - bottom (l=2379)		-	-	1	-	-
16.	1.379.597	Shield - bottom (l=793)		-	-	-	1	-
16.	1.373.116	Shield - bottom (l=1363)		1	-	-	-	-
16.	1.373.083	Shield - bottom (l=1451)		-	1	-	-	-
17.	1.379.041	Shield - bottom (l=2301)		-	-	-	-	1
17.	1.379.598	Shield - bottom (l=1758,5)		-	-	-	1	-
18.	1.379.042	Shield - bottom (l=2343)		-	-	-	-	1
18.	1.379.599	Shield - bottom (l=1773,5)		-	-	-	1	-
19.	1.379.038	Shield - bottom (l=1446)		-	-	-	-	1
20.	1.379.043	Shield - bottom (l=1438)		-	-	-	-	1
21.*	1.376.131	Rubber plate		20	21	30	33	60
22.*	1.376127	Flat		20	21	30	33	60
23.*	74908000066	Hex nut - plastic insert M8 - DIN982		21	22	31	34	63
24.*	79408002566	Hex bolt M8x25 - DIN933/8.8		2	2	2	2	4
25.*	79408003566	Hex bolt M8x35 - DIN933/8.8		19	20	29	32	59
26.*	73508000066	Hex nut M8 - DIN934		61	62	76	80	158
27.*	1.377.372	Spacer		2	2	2	2	2
28.*	1.376.600	Side-shield		1	1	1	1	1
29.*	1.379.534	Deflector plate		-	-	-	-	15
29.*	1.379.535	Deflector plate		7	7	11	11	-
30.*	1.379.099	Knife-shield		1	1	1	1	1
31.*	79410002066	Hex bolt M10x20 - DIN933/8.8		6	6	6	6	6
32.*	91623938861	Spring washer - A10		6	6	6	6	6
33.*	1.376.599	Stiffener		1	1	1	1	1
34.**	1.373.619	Shield		1	1	-	1	-
34.**	1.372.684	Shield		-	-	1	-	1
35.**	1.372.937	Shield	2020→	1	1	1	1	1

Note: the items marked with * are only valid for machines with chopper!
The items marked with ** are only valid for machines without a chopper!

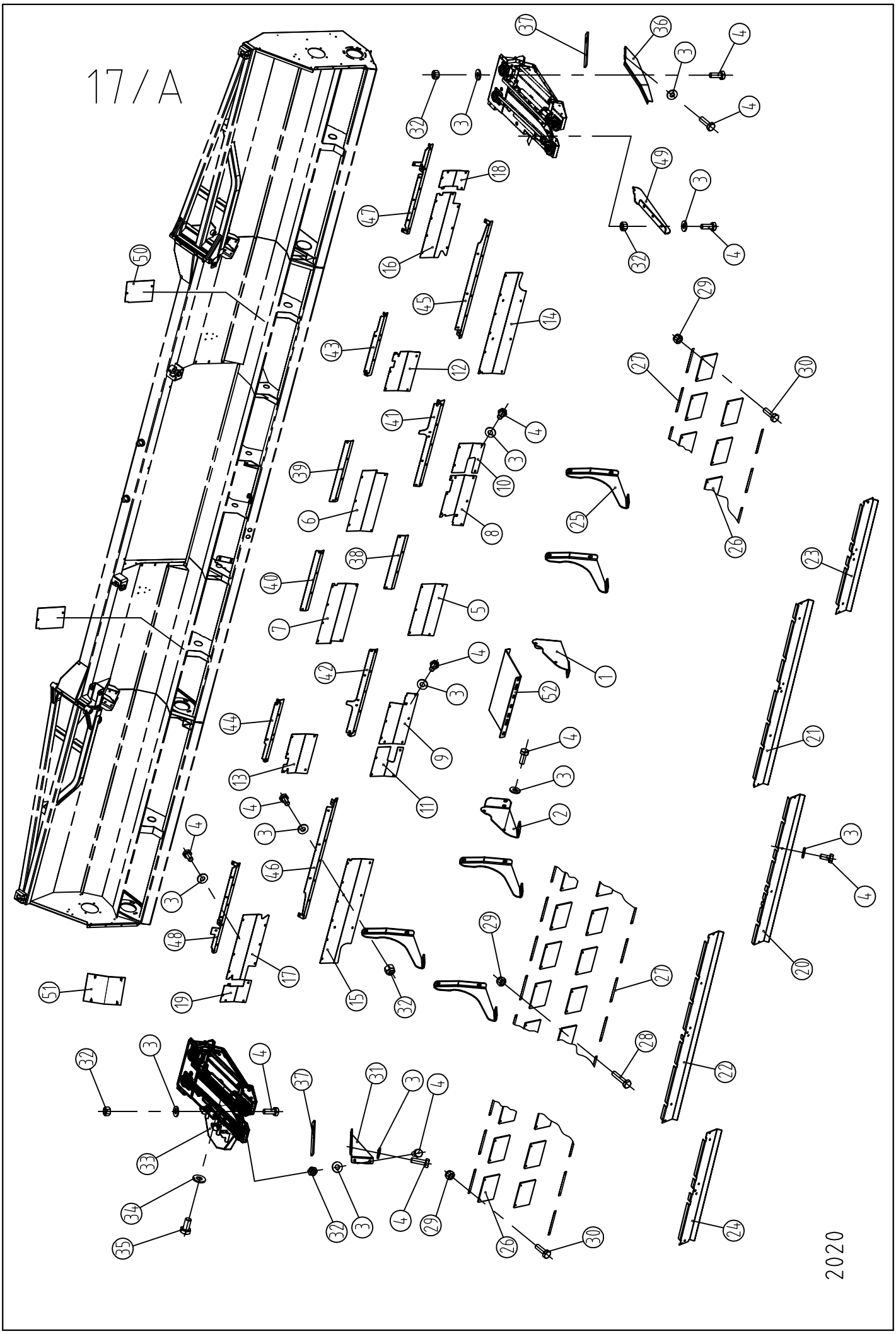
17 / A
2020

DRIVE-SHIELDS - FOLDING (2010→)

Ref.	Part Number	Description		4+2R 70cm	4+2R 76.2cm	4+2 R 80cm	5+2R 60cm	4+2x2R 70cm	4+2x2R 76.2cm	4+2x2R 80cm	5+2x2R 60cm	5+2x2R 76.2cm	6+2x3R 70 cm	6+2x3R 76.2cm
1.	1.377.364	Bracket - LH		-	-	-	-	-	-	-	-	1	-	-
1.	1.377.364	Bracket - LH	→2014	1	1	-	-	-	1	-	-	-	1	1
1.	1.378.973	Bracket - LH	2015→	1	1	1	1	1	1	1	1	-	1	1
2.	1.377.365	Bracket - RH		-	-	-	-	-	-	-	-	1	-	-
2.	1.377.365	Bracket - RH	→2014	1	1	-	-	-	1	-	-	-	1	1
2.	1.378.974	Bracket - RH	2015→	1	1	1	1	1	1	1	1	-	1	1
3.	91623938761	Spring washer - A8		115	155	120	116	146	199	152	138	228	282	282
4.	79408002066	Hex bolt M8x20 - DIN933/8.8		74	100	85	86	94	129	97	102	146	188	188
5.	1.378.296	Shield - back (l=536)	→2015	-	1	-	-	-	1	-	-	-	-	1
5.	1.373.810	Shield - back (l=1764)	2016→	-	1	-	-	-	1	-	-	-	-	-
5.	1.378.296	Shield - back (l=536)	→2014	1	-	-	-	-	-	-	-	-	-	-
5.	1.373.293	Shield - back (l=1578)	2015→	1	-	-	-	1	-	-	-	-	-	-
5.	1.378.353	Shield - back (l=367)		-	-	-	-	-	-	-	-	1	-	-
5.	1.373.544	Shield - back (l=1878)	2015→	-	-	1	-	-	-	1	-	-	-	-
5.	1.372.185	Shield - back (l=1578)		-	-	-	1	-	-	-	1	-	-	-
5.	1.373.957	Shield - back (l=2124)	2016→	-	-	-	-	-	-	-	-	-	-	1
5.	1.373.976	Shield - back (l=1478)		-	-	-	-	-	-	-	-	-	1	-
6.	1.378.297	Shield - back (l=635)		-	-	-	-	-	-	-	-	1	-	-
6.	1.378.297	Shield - back (l=635)	→2014	1	1	-	-	-	1	-	-	-	-	1
7.	1.378.298	Shield - back (l=627)	→2014	1	1	-	-	-	1	-	-	-	-	1
7.	1.378.354	Shield - back (l=796)		-	-	-	-	-	-	-	-	1	-	-
8.	1.378.315	Shield - back (l=538)	→2015	-	1	-	-	-	1	-	-	-	-	-
8.	1.373.811	Shield - back (l=729)	2016→	-	1	-	-	-	1	-	-	-	-	-
8.	1.378.340	Shield - back (l=520)	→2015	-	-	-	-	-	-	-	-	-	-	1
8.	1.373.958	Shield - back (l=1311)	2016→	-	-	-	-	-	-	-	-	-	-	1
8.	1.373.978	Shield - back (l=1419)		-	-	-	-	-	-	-	-	-	1	-
9.	1.378.316	Shield - back (l=546)	→2015	-	1	-	-	-	1	-	-	-	-	-
9.	1.373.812	Shield - back (l=729)	2016→	-	1	-	-	-	1	-	-	-	-	-
9.	1.378.341	Shield - back (l=527.5)	→2015	-	-	-	-	-	-	-	-	-	-	1
9.	1.373.959	Shield - back (l=1311)	2016→	-	-	-	-	-	-	-	-	-	-	1
9.	1.373.977	Shield - back (l=1417)		-	-	-	-	-	-	-	-	-	1	-
10.	1.378.321	Shield - back (l=306)	→2015	-	-	-	-	-	-	-	-	-	-	1
11.	1.378.322	Shield - back (l=306.5)	→2015	-	-	-	-	-	-	-	-	-	-	1
12.	1.378.323	Shield - back (l=408)	→2015	-	-	-	-	-	-	-	-	-	-	1
12.	1.378.334	Shield - back (l=939)	→2015	-	-	-	-	-	-	-	-	1	-	-
12.	1.378.311	Shield - back (l=383)	→2014	1	-	-	-	-	-	-	-	-	-	-
12.	1.373.294	Shield - back (l=667)	2015→	1	-	-	-	1	-	-	-	-	-	-
12.	1.373.545	Shield - back (l=767)	2015→	-	-	1	-	-	-	1	-	-	-	-
12.	1.372.186	Shield - back (l=717)		-	-	-	1	-	-	-	1	-	-	-
13.	1.378.324	Shield - back (l=408)	→2015	-	-	-	-	-	-	-	-	-	-	1
13.	1.378.335	Shield - back (l=907)		-	-	-	-	-	-	-	-	1	-	-
13.	1.378.312	Shield - back (l=391)	→2014	1	-	-	-	-	-	-	-	-	-	-
13.	1.373.295	Shield - back (l=667)	2015→	1	-	-	-	1	-	-	-	-	-	-
13.	1.373.546	Shield - back (l=767)	2015→	-	-	1	-	-	-	1	-	-	-	-
13.	1.372.187	Shield - back (l=752)		-	-	-	1	-	-	-	1	-	-	-
14.	1.378.317	Shield - back (l=537)		-	-	-	-	-	1	-	-	1	-	-
14.	1.378.325	Shield - back (l=1055)	→2015	-	-	-	-	-	-	-	-	-	-	1
14.	1.373.960	Shield - back (l=1125)	2016→	-	-	-	-	-	-	-	-	-	-	1
14.	1.373.472	Shield - back (l=612)	2015→	-	-	-	-	1	-	1	-	-	-	-
14.	1.373.979	Shield - back (l=1001)		-	-	-	-	-	-	-	-	-	1	-
14.	1.372.188	Shield - back (l=532,5)		-	-	-	-	-	-	-	1	-	-	-
15.	1.378.318	Shield - back (l=537)		-	-	-	-	-	1	-	-	1	-	-
15.	1.378.326	Shield - back (l=1090)	→2015	-	-	-	-	-	-	-	-	-	-	1
15.	1.373.961	Shield - back (l=1160)	2016→	-	-	-	-	-	-	-	-	-	-	1
15.	1.373.474	Shield - back (l=612)	2015→	-	-	-	-	1	-	1	-	-	-	-
15.	1.373.980	Shield - back (l=1036)		-	-	-	-	-	-	-	-	-	1	-
15.	1.372.189	Shield - back (l=532,5)		-	-	-	-	-	-	-	1	-	-	-
16.	1.378.327	Shield - back (l=681)	→2015	-	-	-	-	-	-	-	-	-	-	1
16.	1.373.962	Shield - back (l=909)	2016→	-	-	-	-	-	-	-	-	-	-	1
16.	1.378.319	Shield - back (l=437)		-	-	-	-	-	1	-	-	1	-	-
16.	1.378.313	Shield - back (l=276)	→2015	-	1	-	-	-	-	-	-	-	-	-
16.	1.378.313	Shield - back (l=276)	→2014	1	-	-	-	-	-	-	-	-	-	-
16.	1.373.296	Shield - back (l=512)	2016→	1	1	1	1	-	-	-	-	-	-	-
16.	1.373.473	Shield - back (l=633)	2015→	-	-	-	-	1	-	-	-	-	-	-
16.	1.373.542	Shield - back (l=660)	2015→	-	-	-	-	-	-	1	-	-	-	-
16.	1.373.981	Shield - back (l=909)		-	-	-	-	-	-	-	-	-	1	-
16.	1.372.190	Shield - back (l=577,5)		-	-	-	-	-	-	-	1	-	-	-
17.	1.378.328	Shield - back (l=681)	→2015	-	-	-	-	-	-	-	-	-	-	1
17.	1.373.995	Shield - back (l=909)	2016→	-	-	-	-	-	-	-	-	-	-	1
17.	1.378.320	Shield - back (l=472)		-	-	-	-	-	1	-	-	1	-	-

Note: the items marked with * are only valid for machines with chopper! The items marked with ** are only valid for machines without a chopper!
2016-> : only for machines with higher serial number than xxxxx16xxx

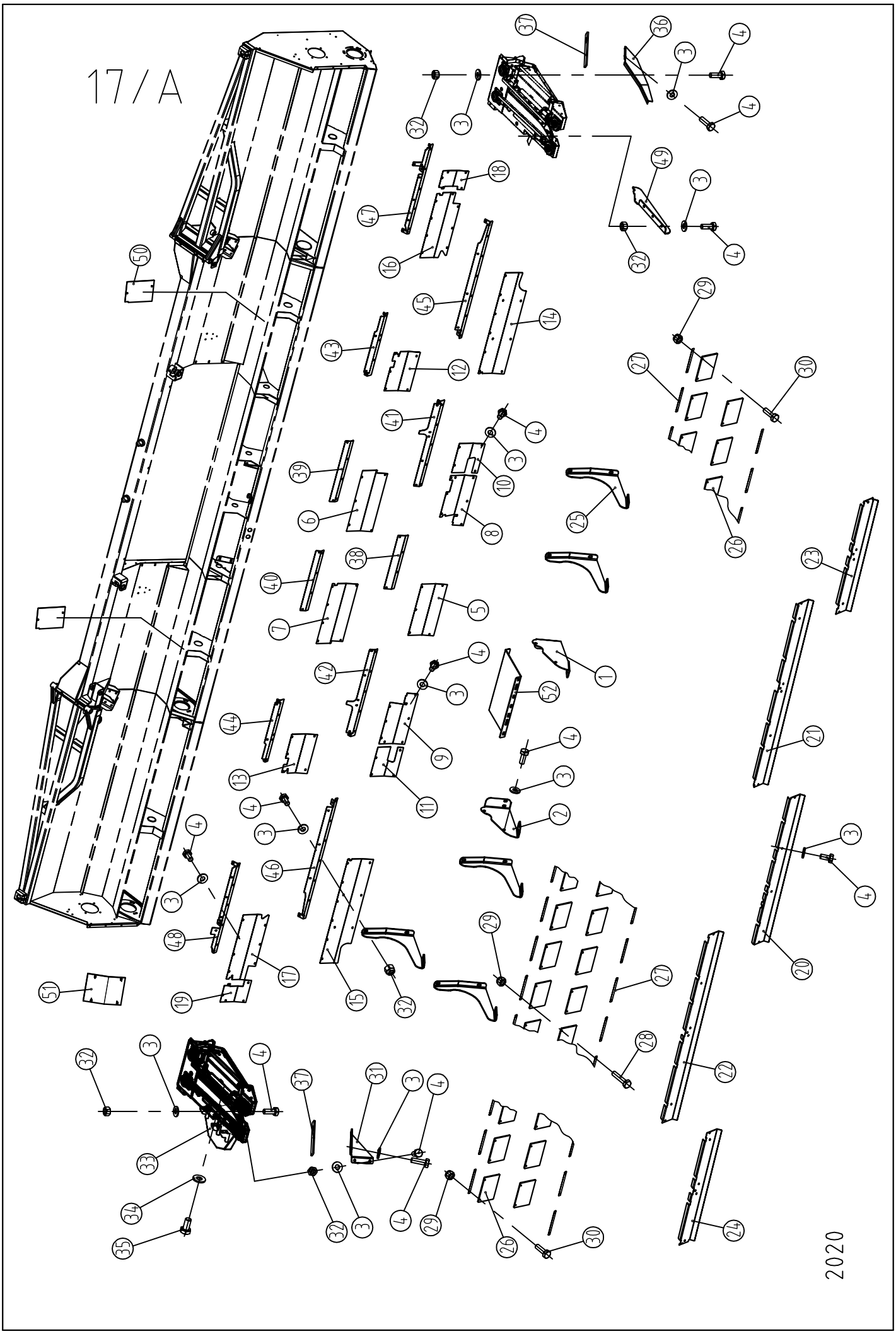
17 / A
2020

DRIVE-SHIELDS - FOLDING (2010→)

Ref.	Part Number	Description		4+2R 70cm	4+2R 76.2cm	4+2 R 80cm	5+2R 60cm	4+2x2R 70cm	4+2x2R 76.2cm	4+2x2R 80cm	5+2x2R 60cm	5+2x2R 76.2cm	6+2x3R 70 cm	6+2x3R 76.2cm
17.	1.378.314	Shield - back (l=311)	→2015	-	1	-	-	-	-	-	-	-	-	-
17.	1.378.314	Shield - back (l=311)	→2014	1	-	-	-	-	-	-	-	-	-	-
17.	1.373.297	Shield - back (l=549)	2016→	1	1	1	-	-	-	-	-	-	-	-
17.	1.372.218	Shield - back (l=512)		-	-	-	1	-	-	-	-	-	-	-
17.	1.373.475	Shield - back (l=633)	2015→	-	-	-	-	1	-	-	-	-	-	-
17.	1.373.543	Shield - back (l=695)	2015→	-	-	-	-	-	-	1	-	-	-	-
17.	1.373.996	Shield - back (l=909)		-	-	-	-	-	-	-	-	-	1	-
17.	1.372.191	Shield - back (l=577,5)		-	-	-	-	-	-	-	1	-	-	-
18.	1.378.224	Shield - back (l=195)	→2015	1	1	-	-	-	1	-	-	-	-	1
18.	1.378.224	Shield - back (l=195)		-	-	-	-	-	-	-	-	1	-	1
19.	1.378.225	Shield - back (l=230)	→2015	1	1	-	-	-	1	-	-	-	-	1
19.	1.378.225	Shield - back (l=230)		-	-	-	-	-	-	-	-	1	-	-
20.	1.377.338	Shield - bottom (l=1758)	→2015	-	1	-	-	-	1	-	-	-	-	1
20.	1.373.847	Shield - bottom (l=1763)	2016→	-	1	-	-	-	1	-	-	-	-	-
20.	1.377.341	Shield - bottom (l=1758)	→2014	1	-	-	-	-	-	-	-	-	-	-
20.	1.373.302	Shield - bottom (l=1577)	2015→	1	-	-	-	1	-	-	-	-	-	-
20.	1.373.547	Shield - bottom (l=1883)	2015→	-	-	1	-	-	-	1	-	-	-	-
20.	1.372.180	Shield - bottom (l=1577)		-	-	-	1	-	-	-	1	-	-	-
20.	1.377.515	Shield - bottom (l=1758)		-	-	-	-	-	-	-	-	1	-	-
20.	1.373.963	Shield - bottom (l=2123)	2016→	-	-	-	-	-	-	-	-	-	-	1
20.	1.373.982	Shield - bottom (l=1470)		-	-	-	-	-	-	-	-	-	1	-
21.	1.377.354	Shield - bottom (l=728)	→2015	-	1	-	-	-	1	-	-	-	-	-
21.	1.373.814	Shield - bottom (l=717)	2016→	-	1	-	-	-	1	-	-	-	-	-
21.	1.377.356	Shield - bottom (l=1490)	→2015	-	-	-	-	-	-	-	-	-	-	1
21.	1.373.965	Shield - bottom (l=1311)	2016→	-	-	-	-	-	-	-	-	-	-	1
21.	1.377.350	Shield - bottom (l=573)	→2014	1	-	-	-	-	-	-	-	-	-	-
21.	1.373.299	Shield - bottom (l=666)	2015→	1	-	-	-	1	-	-	-	-	-	-
21.	1.373.549	Shield - bottom (l=761,5)	2015→	-	-	1	-	-	-	1	-	-	-	-
21.	1.372.182	Shield - bottom (l=716)		-	-	-	1	-	-	-	1	-	-	-
21.	1.377.516	Shield - bottom (l=1129)		-	-	-	-	-	-	-	-	1	-	-
21.	1.373.983	Shield - bottom (l=1421)		-	-	-	-	-	-	-	-	-	1	-
22.	1.377.355	Shield - bottom (l=736)	→2015	-	1	-	-	-	1	-	-	-	-	-
22.	1.373.813	Shield - bottom (l=731)	2016→	-	1	-	-	-	1	-	-	-	-	-
22.	1.377.357	Shield - bottom (l=1498)	→2015	-	-	-	-	-	-	-	-	-	-	1
22.	1.373.964	Shield - bottom (l=1311)	2016→	-	-	-	-	-	-	-	-	-	-	1
22.	1.377.351	Shield - bottom (l=581)	→2014	1	-	-	-	-	-	-	-	-	-	-
22.	1.373.298	Shield - bottom (l=669)	2015→	1	-	-	-	1	-	-	-	-	-	-
22.	1.373.548	Shield - bottom (l=767,5)	2015→	-	-	1	-	-	-	1	-	-	-	-
22.	1.372.181	Shield - bottom (l=754)		-	-	-	1	-	-	-	1	-	-	-
22.	1.377.517	Shield - bottom (l=1097)		-	-	-	-	-	-	-	-	1	-	-
22.	1.373.984	Shield - bottom (l=1421)		-	-	-	-	-	-	-	-	-	1	-
23.	1.377.688	Shield - bottom (l=539)	→2015	-	1	-	-	-	-	-	-	-	-	-
23.	1.377.688	Shield - bottom (l=539)	→2014	1	-	-	-	-	-	-	-	-	-	-
23.	1.373.300	Shield - bottom (l=541)	2016→	1	1	1	1	-	-	-	-	-	-	-
23.	1.373.470	Shield - bottom (l=1241)	2015→	-	-	-	-	1	-	-	-	-	-	-
23.	1.377.700	Shield - bottom (l=1301)		-	-	-	-	-	1	-	-	1	-	-
23.	1.373.550	Shield - bottom (l=1303)	2015→	-	-	-	-	-	-	1	-	-	-	-
23.	1.372.183	Shield - bottom (l=1141)		-	-	-	-	-	-	-	1	-	-	-
23.	1.378.348	Shield - bottom (l=2048)	→2015	-	-	-	-	-	-	-	-	-	-	1
23.	1.373.967	Shield - bottom (l=2065)	2016→	-	-	-	-	-	-	-	-	-	-	1
23.	1.373.986	Shield - bottom (l=1941)		-	-	-	-	-	-	-	-	-	1	-
24.	1.377.689	Shield - bottom (l=574)	→2015	-	1	-	-	-	-	-	-	-		-
24.	1.377.689	Shield - bottom (l=574)	→2014	1	-	-	-	-	-	-	-	-	-	-
24.	1.373.301	Shield - bottom (l=576)	2016→	1	1	1	-	-	-	-	-	-	-	-
24.	1.372.217	Shield - bottom (l=541)		-	-	-	1	-	-	-	-	-	-	-
24.	1.373.471	Shield - bottom (l=1276)	2015→	-	-	-	-	1	-	-	-	-	-	-
24.	1.377.701	Shield - bottom (l=1336)		-	-	-	-	-	1	-	-	1	-	-
24.	1.373.551	Shield - bottom (l=1338)	2015→	-	-	-	-	-	-	1	-	-	-	-
24.	1.372.184	Shield - bottom (l=1141)		-	-	-	-	-	-	-	1	-	-	-
24.	1.378.349	Shield - bottom (l=2083)	→2015	-	-	-	-	-	-	-	-	-	-	1
24.	1.373.966	Shield - bottom (l=2100)	2016→	-	-	-	-	-	-	-	-	-	-	1
24.	1.373.985	Shield - bottom (l=1976)		-	-	-	-	-	-	-	-	-	1	-
25.	1.377.362	Stiffener - LH		-	-	-	-	-	-	-	-	8	-	-
25.	1.377.363	Stiffener - RH		-	-	-	-	-	-	-	-	7	-	-
25.	1.377.362	Stiffener - LH	→2014	4	4	-	-	-	6	-	-	-	6	6
25.	1.377.363	Stiffener - RH	→2014	4	4	-	-	-	6	-	-	-	5	5
26.*	1.376.131	Rubber plate		21	23	23	21	27	29	29	27	32	43	43
27.*	1.376.127	Flat		21	23	23	21	27	29	29	27	32	43	43
28.*	79408003566	Hex bolt M8x35 - DIN933/8.8		20	24	20	18	24	26	26	26	27	38	38

Note: the items marked with * are only valid for machines with chopper! The items marked with ** are only valid for machines without a chopper!
2016-> : only for machines with higher serial number than xxxxx16xxx

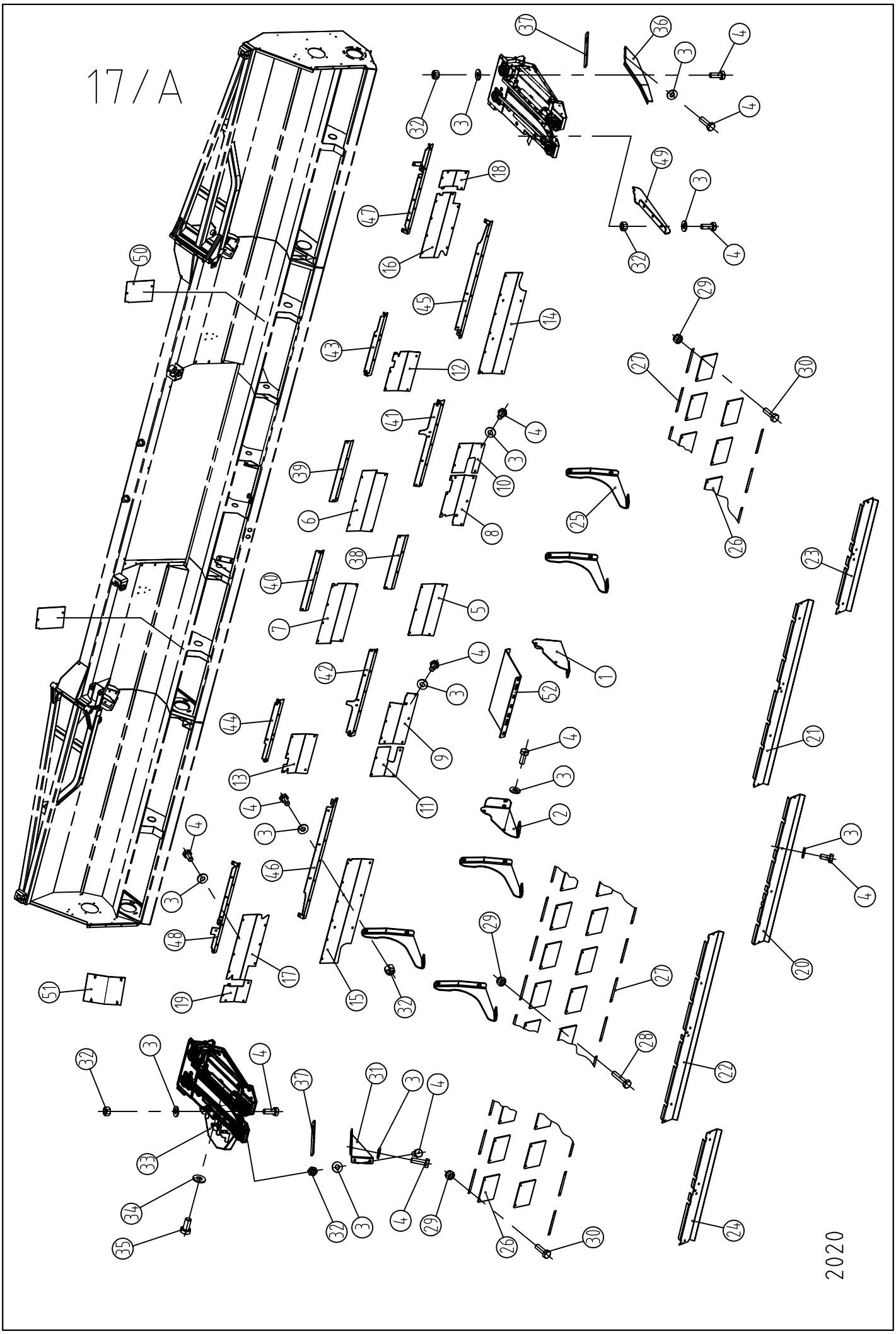
17 / A
2020

DRIVE-SHIELDS - FOLDING (2010→)

Ref.	Part Number	Description		4+2R 70cm	4+2R 76.2cm	4+2 R 80cm	5+2R 60cm	4+2x2R 70cm	4+2x2R 76.2cm	4+2x2R 80cm	5+2x2R 60cm	5+2x2R 76.2cm	6+2x3R 70 cm	6+2x3R 76.2cm
29.*	74908000066	Hex nut - plastic insert M8 - DIN982		30	30	26	24	30	36	32	32	39	48	48
30.*	79408003566	Hex bolt M8x25 - DIN933/8.8		10	6	6	6	6	10	6	6	12	10	10
31.*	1.376.599	Stiffener		1	1	1	1	1	1	1	1	1	1	1
32.	73508000066	Hex nut M8 - DIN934		66	66	55	50	68	83	71	70	94	112	112
33.*	1.376.007	Knife-shield	→2012	1	1	-	-	-	1	-	-	1	1	1
33.*	1.379.099	Knife-shield	2013→	1	1	1	1	1	1	1	1	1	1	1
34.*	91623938861	Spring washer - A10		6	6	6	6	6	6	6	6	6	6	6
35.*	79410002066	Hex bolt M10x20 - DIN933/8.8		6	6	6	6	6	6	6	6	6	6	6
36.*	1.376.600	Side-shield		1	1	1	1	1	1	1	1	1	1	1
37.*	1.377.372	Spacer		2	2	2	2	2	2	2	2	2	2	2
38.	1.377.864	Stiffener plate (l=536)		-	1	-	-	-	1	-	-	-	-	1
38.	1.377.864	Stiffener plate (l=536)	→2014	1	-	-	-	-	-	-	-	-	-	-
38.	1.378.355	Stiffener plate (l=367)		-	-	-	-	-	-	-	-	1	-	-
39.	1.377.865	Stiffener plate (l=608)		-	1	-	-	-	1	-	-	1	-	1
39.	1.377.865	Stiffener plate (l=608)	→2014	1	-	-	-	-	-	-	-	-	-	-
40.	1.377.866	Stiffener plate (l=600)		-	1	-	-	-	1	-	-	-	-	1
40.	1.377.866	Stiffener plate (l=600)	→2014	1	-	-	-	-	-	-	-	-	-	-
40.	1.378.356	Stiffener plate (l=769)		-	-	-	-	-	-	-	-	1	-	-
41.	1.378.342	Stiffener plate (l=860)		-	-	-	-	-	-	-	-	-	-	1
42.	1.378.343	Stiffener plate (l=867.5)		-	-	-	-	-	-	-	-	-	-	1
43.	1.378.345	Stiffener plate (l=624)		-	-	-	-	-	-	-	-	-	-	1
43.	1.377.885	Stiffener plate (l=724)		-	1	-	-	-	1	-	-	-	-	-
43.	1.377.891	Stiffener plate (l=1125)		-	-	-	-	-	-	-	-	1	-	-
43.	1.377.881	Stiffener plate (l=569)	→2014	1	-	-	-	-	-	-	-	-	-	-
44.	1.378.346	Stiffener plate (l=624.5)		-	-	-	-	-	-	-	-	-	-	1
44.	1.377.886	Stiffener plate (l=732)		-	1	-	-	-	1	-	-	-	-	-
44.	1.377.892	Stiffener plate (l=1093)		-	-	-	-	-	-	-	-	1	-	-
44.	1.377.882	Stiffener plate (l=577)	→2014	1	-	-	-	-	-	-	-	-	-	-
45.	1.378.338	Stiffener plate (l=1172)		-	-	-	-	-	-	-	-	-	-	1
46.	1.378.339	Stiffener plate (l=1207)		-	-	-	-	-	-	-	-	-	-	1
47.	1.378.350	Stiffener plate (l=897)		-	-	-	-	-	-	-	-	-	-	1
47.	1.378.336	Stiffener plate (l=1309)		-	-	-	-	-	1	-	-	1	-	-
47.	1.377.883	Stiffener plate (l=547)		-	1	-	-	-	-	-	-	-	-	-
47.	1.377.883	Stiffener plate (l=547)	→2014	1	-	-	-	-	-	-	-	-	-	-
48.	1.378.351	Stiffener plate (l=897)		-	-	-	-	-	-	-	-	-	-	1
48.	1.378.337	Stiffener plate (l=1344)		-	-	-	-	-	1	-	-	1	-	-
48.	1.377.884	Stiffener plate (l=582)		-	1	-	-	-	-	-	-	-	-	-
48.	1.377.884	Stiffener plate (l=582)	→2014	1	-	-	-	-	-	-	-	-	-	-
49.*	1.379.534	Deflector plate	2014→	5	5	5	-	7	7	7	-	8	11	11
49.*	1.379.535	Deflector plate		-	-	-	6	-	-	-	8	-	-	-
50.	1.373.619	Shield - back	2015→	2	2	2	2	2	2	2	2	-	-	-
51.**	1.379.708	Shield	2015→	1	1	1	1	1	1	1	1	1	1	1
52.**	1.372.937	Shield	2020→	1	1	1	1	1	1	1	1	1	1	1

Note: the items marked with * are only valid for machines with chopper! The items marked with ** are only valid for machines without a chopper!
2016-> : only for machines with higher serial number than xxxxx16xxx

Elektromos törölécállító
Electric snapping plate adjuster.

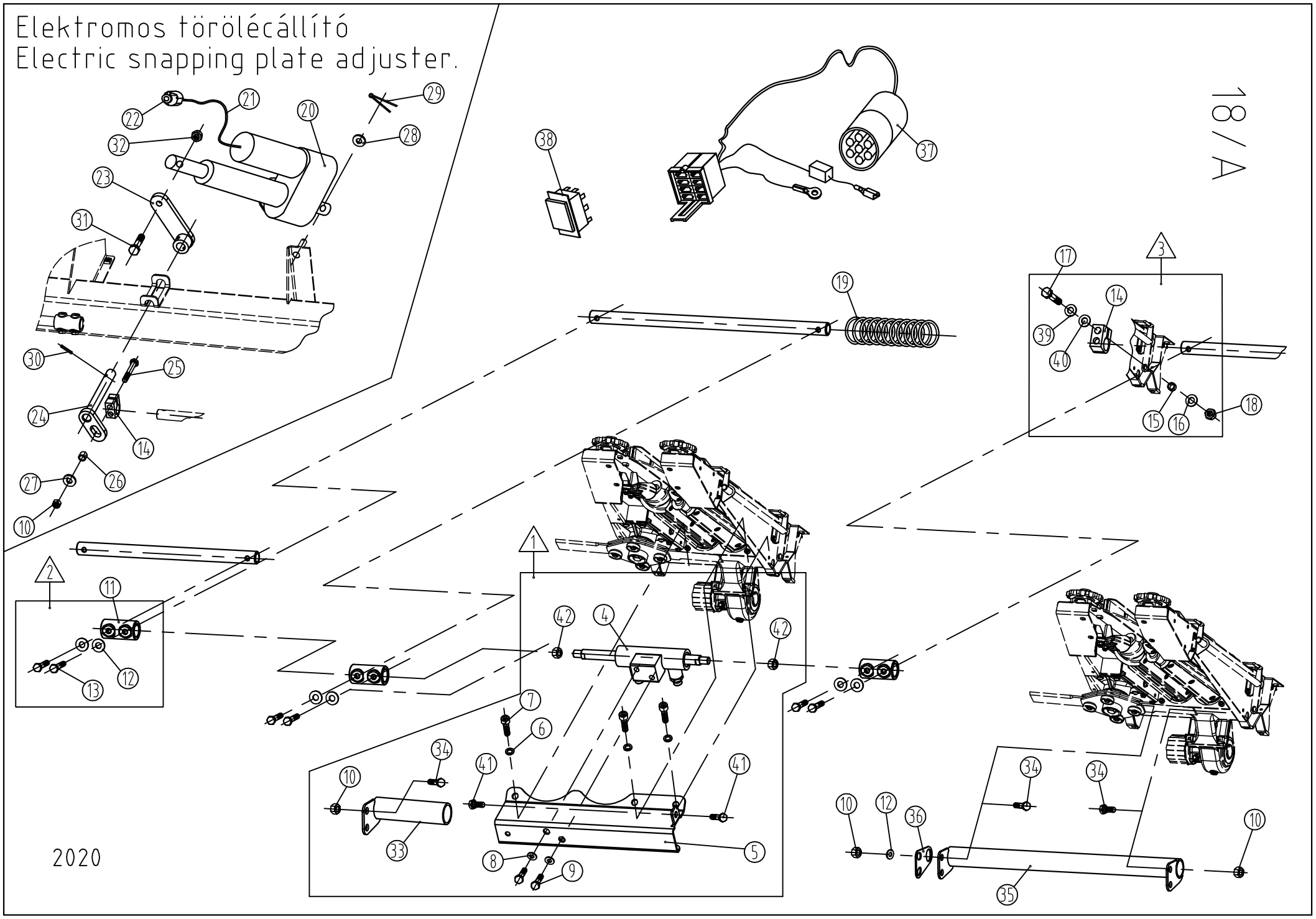

ELECTRIC & HYDRAULIC SNAPPING PLATE ADJUSTER (2010→)

Ref.	Part Number	Description		6R 70-76.2cm	8R 50-56cm	8R 70-76.2-96,5cm	12R 50-56cm	12R 70-76.2cm	16R 76.2cm	4+2R 70-76.2-80cm	4+2x2R 70-76.2-80cm	5+2R 60cm	5+2x2R 60-76.2cm	6+2x3R 70-76.2cm
4.	1.376.104	Hydraulic cylinder	→2015	1	1	1	1	1	1	1	1	1	1	1
4.	1.373.725	Hydraulic cylinder	2016→	1	1	1	1	1	1	1	1	1	1	1
5.	1.377.839	Cylinder console	→2015	1	1	1	1	1	1	1	1	1	1	1
5.	1.373.730	Cylinder console	2016→	1	1	1	1	1	1	1	1	1	1	1
6.	71810000060	Spring washer M10 - DIN7980 **(see note below!)**		3	3	3	3	3	3	3	3	3	3	3
7.	80210003563	Hex socket head cap bolt M10x35 - DIN912/10.9 **(see note below!)**		3	3	3	3	3	3	3	3	3	3	3
8.	91623938861	Spring washer- A10		2	2	2	2	2	2	2	2	2	2	2
9.	79410001666	Hex bolt -M10x16 - DIN933/8.8		2	2	2	2	2	2	2	2	2	2	2
10.	74910000066	Hex nut - plastic insert M10 - DIN985	→2019	25	32	33	48	49	65	25	33	24	37	49
11.	1.376.105	Bridge-piece		5	7	7	11	11	15	3	5	4	6	9
12.	91623938761	Spring washer - A8		30	42	42	66	66	90	26	38	32	44	62
13.	79408004066	Hex bolt M8x40 - DIN933/8.8		10	14	14	22	22	30	6	10	8	12	18
14.	1.308.195	Clamp		7	8	9	12	13	17	7	9	8	10	13
15.	1.376.006	Bushing	→2014	6	8	8	12	12	16	6	8	8	9	12
15.	1.373.648	Bushing	2015→	6	8	8	12	12	16	6	8	8	9	12
16.	71410000060	Washer M10 - DIN125		6	8	8	12	12	16	6	8	8	9	12
17.	79410006066	Hex bolt M10x60 - DIN933/8.8		6	8	8	12	12	16	6	8	8	9	12
18.	70710000066	Lock nut M10 - DIN980		6	8	8	12	12	16	6	8	8	9	12
19.	1.375.772	Spring		-	-	-	-	-	-	2	2	2	2	2
20.	1.308.899	Electric actuator D12 20A 804		1	-	1	-	1	1	1	1	1	1	1
21.	1.310.553	Wire - 1.2m		1	-	1	-	1	1	1	1	1	1	1
22.	1.310.551	Connector (12V, 25A)		1	-	1	-	1	1	1	1	1	1	1
23.	1.376.000	Arm		1	-	1	-	1	1	1	1	1	1	1
24.	1.376.003	Shaft		1	-	1	-	1	1	1	1	1	1	1
25.	79410007066	Hex bolt M10x70 - DIN933/8.8		1	-	1	-	1	1	1	1	1	1	1
26.	1.328.607	Bushing		1	-	1	-	1	1	1	1	1	1	1
27.	1.375.497	Washer		1	-	1	-	1	1	1	1	1	1	1
28.	71412000060	Washer M12 - DIN125		1	-	1	-	1	1	1	1	1	1	1
29.	72404002860	Split pin 4x28 - DIN94		1	-	1	-	1	1	1	1	1	1	1
30.	73008003601	Spring pin 8x36 - DIN1481		1	-	1	-	1	1	1	1	1	1	1
30.	73005003601	Spring pin 5x36 - DIN1481		1	-	1	-	1	1	1	1	1	1	1
31.	79412005566	Hex bolt M12x55 - DIN933/8.8		1	-	1	-	1	1	1	1	1	1	1
32.	74912000066	Hex nut - plastic insert M12 - DIN985		1	-	1	-	1	1	1	1	1	1	1
33.	1.377.837	Shield	→2015	1	1	1	1	1	1	1	1	1	1	1
34.	79410002066	Hex bolt M10x20 - DIN933/8.8	→2019	24	32	32	48	48	64	24	32	24	36	48
34.	79408001666	Hex bolt M8x16 - DIN933/8.8	2020→	24	32	32	48	48	64	24	32	24	36	48
35.	1.377.834	Shield		5	7	7	11	11	15	5	7	6	8	11
36.	1.377.861	Cover plate	→2011	5	7	7	11	11	15	5	7	6	8	11
37.	1.321.932	Harness		1	1	1	1	1	1	1	1	1	1	1
38.	1.310.554	Switch		1	1	1	1	1	1	1	1	1	1	1
39.	714C1050060	Spherical Washer M10 DIN6319/C	2015→	6	8	8	12	12	16	6	8	8	9	12
40.	714D1050060	Spherical Washer M10 DIN6319/D	2015→	6	8	8	12	12	16	6	8	8	9	12
41.	79408002066	Hex bolt M8x20 - DIN933/8.8	→2019	2	2	2	2	2	2	2	2	2	2	2
42.	74914000066	Hex nut - plastic insert M14 - DIN985	→2019	2	2	2	2	2	2	2	2	2	2	2

Note: Item 6 and 7 are the same as item 6 and 5 pg. 49.
Use item 35 instead of item 5 and 33 on electric SPA machine.
Item 37 and 38: for combines without multclutch.
2016-> : only for machines with higher serial number than xxxxx16xxx

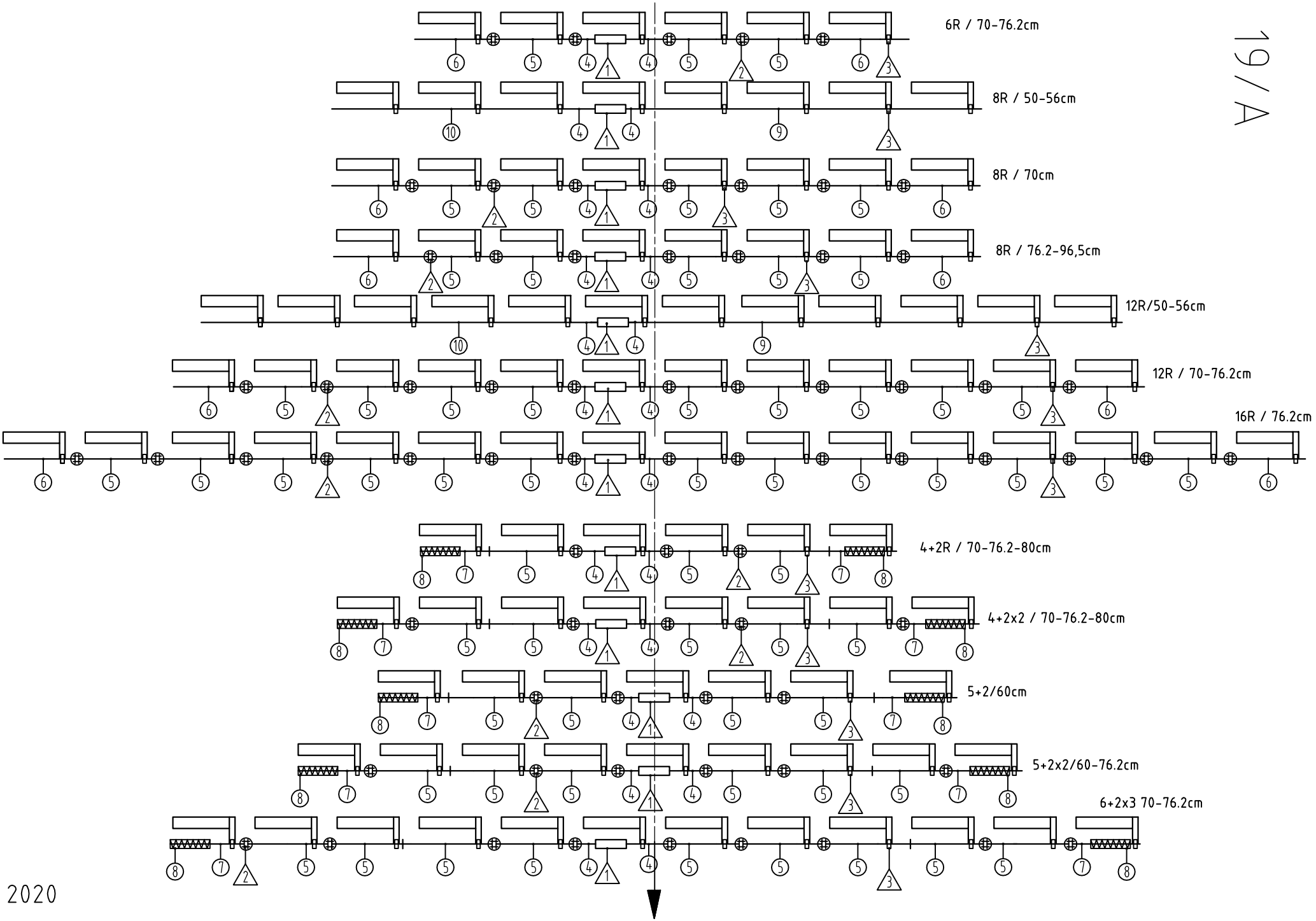
19 / A
6R / 70-76.2cm
8R / 50-56cm
8R / 70cm
8R / 76.2-96,5cm
12R/50-56cm
12R / 70-76.2cm
16R / 76.2cm
4+2R / 70-76.2-80cm
4+2x2 / 70-76.2-80cm
5+2/60cm
5+2x2/60-76.2cm
6+2x3 70-76.2cm
2020

ELECTRIC & HYDRAULIC SNAPPING PLATE ADJUSTER (2010→)

Ref.	Part Number	Description		6R 70cm	6R 76.2 cm	8R 50cm	8R 56cm	8R 70cm	8R 76.2 cm	8R 96,5 cm	12R 50cm	12R 56cm	12R 70cm	12R 76.2 cm	16R 76,2 cm	4+2R 70cm	4+2R 76.2cm	4+2R 80cm	4+2x2R 70cm	4+2x2R 76.2cm	4+2x2R 80cm	5+2R 60cm	5+2x2R 60cm	5+2x2R 76.2cm	6+2x3R 70cm	6+2x3R 76.2cm
1.	-	Hydraulic cylinder and accessories (items 4,5,6,7,8,9,41 & 42 on pg. 18/A)		1	1	1	1	1	1	1	1	1	1	1	1	1	1	1	1	1	1	1	1	1	1	1
1.	1.379.963	Rod - In case of electric adjustment only	→2015	1	1	-	-	1	1	1	-	-	1	1	1	1	1	1	1	1	1	1	1	1	1	1	1
1.	1.373.927	Rod - In case of electric adjustment only	2016→	1	1	-	-	1	1	1	-	-	1	1	1	1	1	1	1	1	1	1	1	1	1	1	1
2.	-	Bridge-piece and hardwares (items 11-13 on pg. 18/A)		5	5	-	-	7	7	7	-	-	11	11	15	3	3	3	5	5	5	4	6	6	9	9
3.	-	Clamp and hardwares (items 14-18 on pg. 18/A)		6	6	8	8	8	8	8	12	12	12	12	16	6	6	6	8	8	8	7	9	9	12	12
4.	1.377.842	Adjusting rod (l=241)	→2015	2	-	-	-	2	-	-	-	-	2	-	-	2	-	-	2	-	-	-	-	-	-	-
4.	1.373.909	Adjusting rod left (l=209)	2016→	1	-	-	-	1	-	-	-	-	1	-	-	1	-	-	1	-	-	-	-	-	1	-
4.	1.373.910	Adjusting rod right (l=209)	2016→	1	-	-	-	1	-	-	-	-	1	-	-	1	-	-	1	-	-	-	-	-	1	-
4.	1.377.843	Adjusting rod (l=272)	→2015	-	2	-	-	-	2	-	-	-	-	2	2	-	2	-	-	2	-	-	-	2	-	2
4.	1.372.195	Adjusting rod (l=201)		-	-	-	-	-	-	-	-	-	-	-	-	-	-	-	-	-	-	1	1	-	-	-
4.	1.372.196	Adjusting rod (l=201)		-	-	-	-	-	-	-	-	-	-	-	-	-	-	-	-	-	-	1	1	-	-	-
4.	1.373.732	Adjusting rod left (l=240)	2016→	-	1	-	-	-	1	-	-	-	-	1	1	-	1	-	-	1	-	-	-	1	-	1
4.	1.373.733	Adjusting rod right (l=240)	2016→	-	1	-	-	-	1	-	-	-	-	1	1	-	1	-	-	1	-	-	-	1	-	1
4.	1.373.557	Adjusting rod (l=291)	→2015	-	-	-	-	-	-	-	-	-	-	-	-	-	-	2	-	-	2	-	-	-	-	-
4.	1.373.911	Adjusting rod (l=259)	2016→	-	-	-	-	-	-	-	-	-	-	-	-	-	-	1	-	-	1	-	-	-	-	-
4.	1.373.912	Adjusting rod (l=259)	2016→	-	-	-	-	-	-	-	-	-	-	-	-	-	-	1	-	-	1	-	-	-	-	-
4.	1.373.920	Adjuster left	2016→	-	-	1	1	-	-	-	1	1	-	-	-	-	-	-	-	-	-	-	-	-	-	-
4.	1.373.919	Adjuster right	2016→	-	-	1	1	-	-	-	1	1	-	-	-	-	-	-	-	-	-	-	-	-	-	-
4.	1.372.755	Adjusting rod (l=384)		-	-	-	-	-	-	1	-	-	-	-	-	-	-	-	-	-	-	-	-	-	-	-
4.	1.372.756	Adjusting rod (l=384)		-	-	-	-	-	-	1	-	-	-	-	-	-	-	-	-	-	-	-	-	-	-	-
5.	1.377.844	Adjusting rod (l=698)		3	-	-	-	5	-	-	-	-	9	-	-	3	-	-	5	-	-	-	-	-	9	-
5.	1.377.845	Adjusting rod (l=760)		-	3	-	-	-	5	-	-	-	-	9	13	-	3	-	-	5	-	-	-	6	-	9
5.	1.373.556	Adjusting rod (l=798)		-	-	-	-	-	-	-	-	-	-	-	-	-	-	3	-	-	5	-	-	-	-	-
5.	1.372.194	Adjusting rod (l=598)		-	-	-	-	-	-	-	-	-	-	-	-	-	-	-	-	-	-	4	6	-	-	-
5.	1.372.759	Adjusting rod (l=963)		-	-	-	-	-	-	5	-	-	-	-	-	-	-	-	-	-	-	-	-	-	-	-
6.	1.377.852	Adjusting rod (l=623)		2	-	-	-	2	-	-	-	-	2	-	-	-	-	-	-	-	-	-	-	-	-	-
6.	1.377.853	Adjusting rod (l=654)		-	2	-	-	-	2	-	-	-	-	2	2	-	-	-	-	-	-	-	-	-	-	-
6.	1.372.758	Adjusting rod (l=756)		-	-	-	-	-	-	2	-	-	-	-	-	-	-	-	-	-	-	-	-	-	-	-
7.	1.377.846	Adjusting rod (l=605)		-	-	-	-	-	-	-	-	-	-	-	-	2	-	-	2	-	-	-	-	-	2	-
7.	1.377.847	Adjusting rod (l=636)		-	-	-	-	-	-	-	-	-	-	-	-	-	2	-	-	2	2	-	-	2	-	2
7.	1.373.992	Adjusting rod (l=655)		-	-	-	-	-	-	-	-	-	-	-	-	-	-	2	-	-	-	-	-	-	-	-
7.	1.372.198	Adjusting rod (l=125)		-	-	-	-	-	-	-	-	-	-	-	-	-	-	-	-	-	-	2	2	-	-	-
8.	1.375.772	Spring		-	-	-	-	-	-	-	-	-	-	-	-	2	2	2	2	2	2	2	2	2	2	2
9.	1.379.624	Adjusting rod (l=3520)	→2015	-	-	-	-	-	-	-	-	1	-	-	-	-	-	-	-	-	-	-	-	-	-	-
9.	1.373.923	Adjusting rod (l=3485)	2016→	-	-	-	-	-	-	-	-	1	-	-	-	-	-	-	-	-	-	-	-	-	-	-
9.	1.379.668	Adjusting rod (l=3215)	→2015	-	-	-	-	-	-	-	1	-	-	-	-	-	-	-	-	-	-	-	-	-	-	-
9.	1.373.928	Adjusting rod (l=3180)	2016→	-	-	-	-	-	-	-	1	-	-	-	-	-	-	-	-	-	-	-	-	-	-	-
9.	1.373.117	Adjusting rod (l=2199)	→2015	-	-	1	-	-	-	-	-	-	-	-	-	-	-	-	-	-	-	-	-	-	-	-
9.	1.373.937	Állító rúd (l=2164)	2016→	-	-	1	-	-	-	-	-	-	-	-	-	-	-	-	-	-	-	-	-	-	-	-
9.	1.373.084	Adjusting rod (l=2402)	→2015	-	-	-	1	-	-	-	-	-	-	-	-	-	-	-	-	-	-	-	-	-	-	-
9.	1.373.933	Adjusting rod (l=2367)	2016→	-	-	-	1	-	-	-	-	-	-	-	-	-	-	-	-	-	-	-	-	-	-	-
10.	1.379.625	Adjusting rod (l=2952)	→2015	-	-	-	-	-	-	-	-	1	-	-	-	-	-	-	-	-	-	-	-	-	-	-
10.	1.373.924	Adjusting rod (l=2917)	2016→	-	-	-	-	-	-	-	-	1	-	-	-	-	-	-	-	-	-	-	-	-	-	-
10.	1.379.669	Adjusting rod (l=2698)	→2015	-	-	-	-	-	-	-	1	-	-	-	-	-	-	-	-	-	-	-	-	-	-	-
10.	1.373.929	Adjusting rod (l=2663)	2016→	-	-	-	-	-	-	-	1	-	-	-	-	-	-	-	-	-	-	-	-	-	-	-
10.	1.373.118	Adjusting rod (l=1682)	→2015	-	-	1	-	-	-	-	-	-	-	-	-	-	-	-	-	-	-	-	-	-	-	-
10.	1.373.938	Adjusting rod (l=1647)	2016→	-	-	1	-	-	-	-	-	-	-	-	-	-	-	-	-	-	-	-	-	-	-	-
10.	1.373.085	Adjusting rod (l=1834)	→2015	-	-	-	1	-	-	-	-	-	-	-	-	-	-	-	-	-	-	-	-	-	-	-
10.	1.373.934	Adjusting rod (l=1799)	2016→	-	-	-	1	-	-	-	-	-	-	-	-	-	-	-	-	-	-	-	-	-	-	-

Note: The exploded view of items 1, 2 and 3 are shown on page 18.
Item 8 is the same as item 19 page 18/A.
2016-> : only for machines with higher serial number than xxxxx16xxx

20

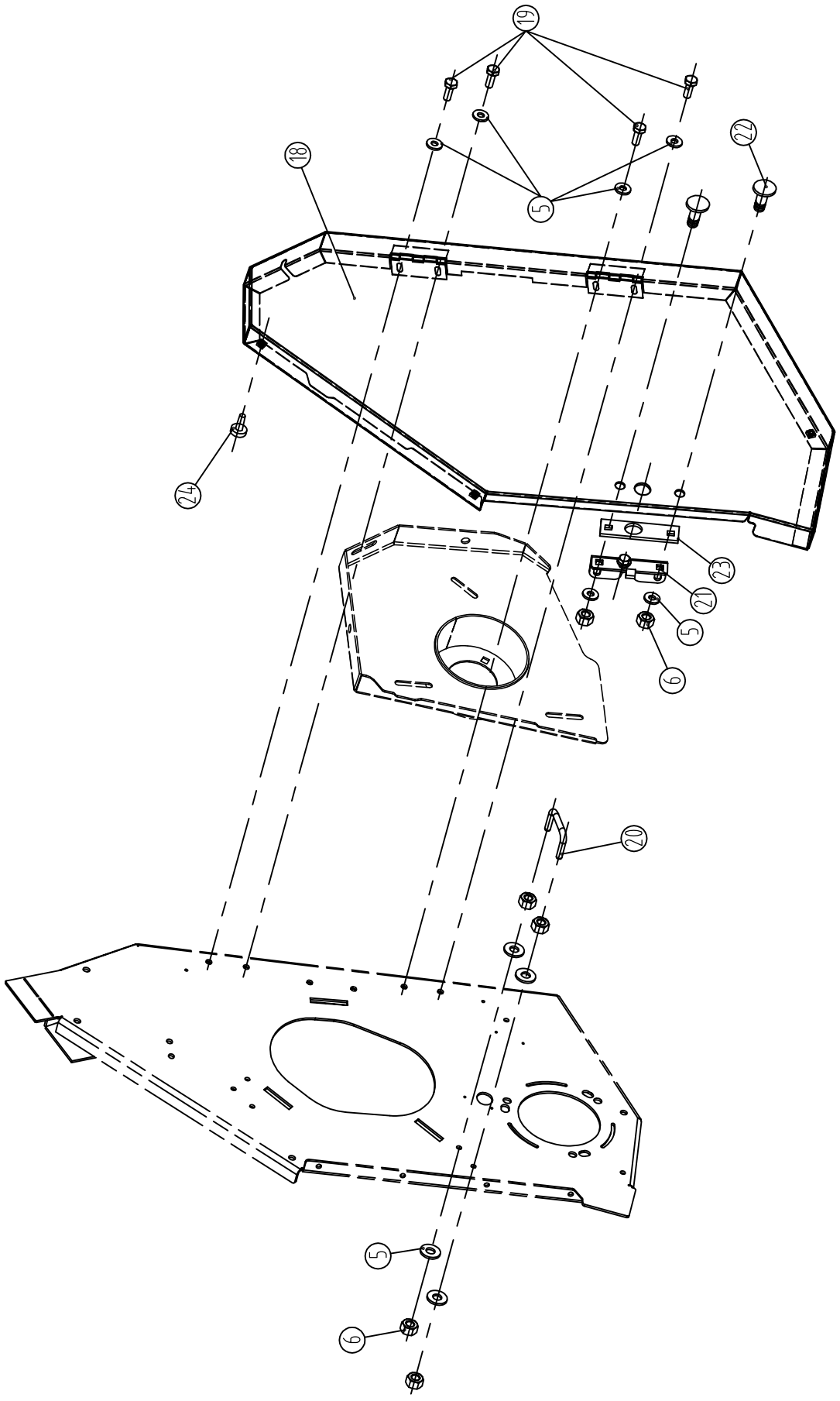

2013

SIDE-SHIELDS

Ref.	Part Number	Description		All models
1.	1.376.729	Tab	→2008	4
2.	91623938661	Spring washer	→2008	4
3.	79406001666	Hex bolt M6x16 - DIN933/8.8	→2008	4
4.	1.376.691	Console	→2008	1
5.	91623938761	Spring washer		20
6.	73508000066	Hex nut M8 - DIN934		12
7.	1.328.843	Brush		1
8.	1.328.844	Nipple		1
9.	1.315.431	Console		1
9.	1.328.835	Console		-
10.	96702375920	Washer		1
10.	1.314.099	Washer		-
11.	79410002566	Hex bolt M10x25 - DIN933/8.8		1
11.	79408002566	Hex bolt M8x25 - DIN933/8.8		-
12.	1.315.717	Tank		1
13.	1.323.420	Nipple		1
14.	54005007001	PVC tube		1
15.	1.328.831	Rotating fitting		-
16.	74912000066	Hex nut - plastic insert M12 - DIN985		-
17.	1.328.834	Counterbalance		-
18.	1.376.699 *	Side-shield - LH	→2009	1
18.	1.376.701 *	Side-shield - RH	→2009	1
18.	1.378.292	Side-shield - LH	2010→	1
18.	1.378.293	Side-shield - RH	2010→	1
19.	79408002066	Hex bolt M8x20 - DIN933/8.8		8
20.	1.378.390	Hook	2010→	2
21.	985AZ102725	Lock	2010→	2
22.	76308002066	Carriage bolt M8x20 - DIN603/8.8	2010→	4
23.	1.378.391	Spacer	2010→	2
24.	975PV615000	Rubber button	2011→	6

Note: Items 18. marked * are also used for rigid headers in 2010.

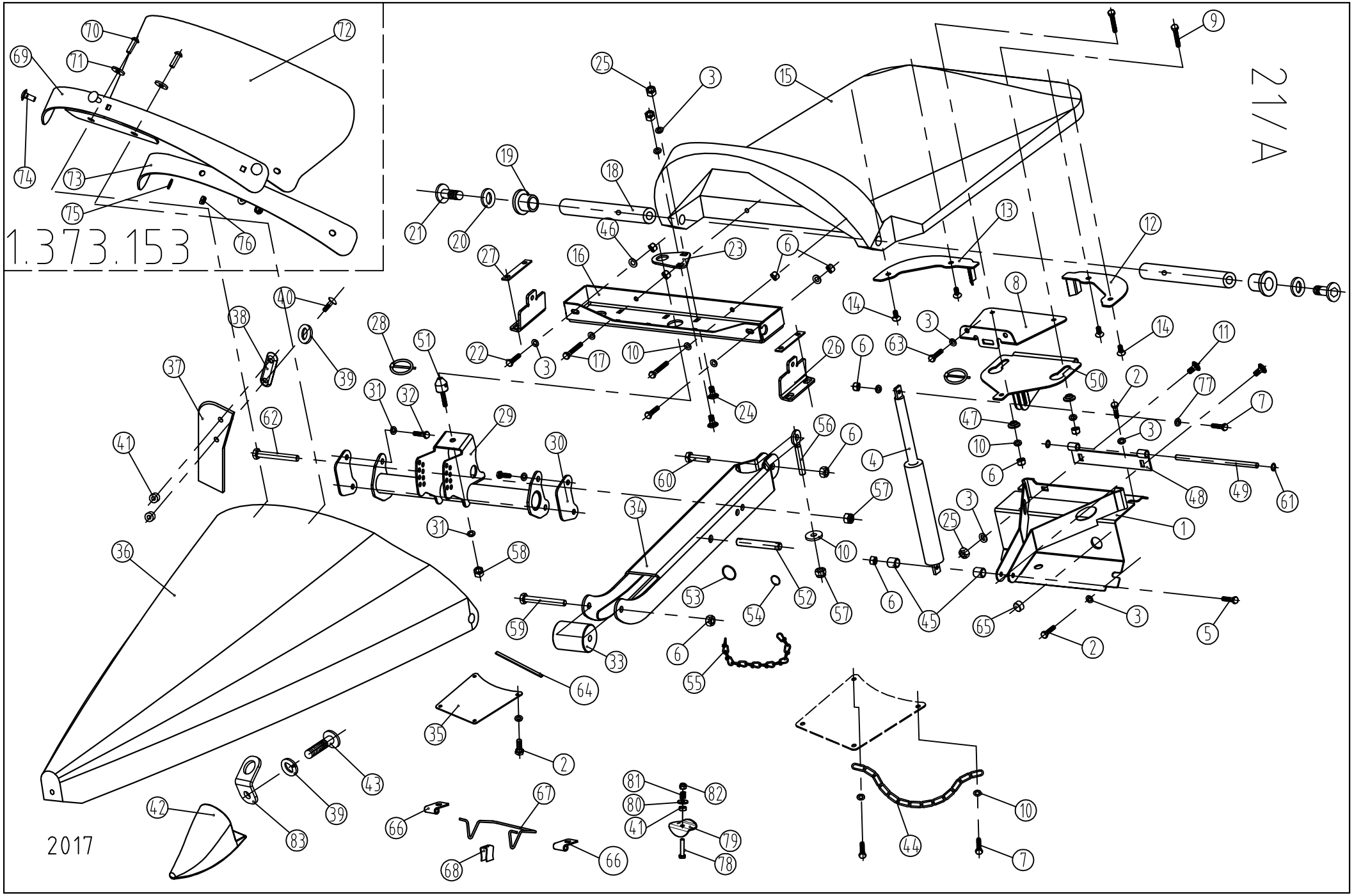
21/A
1.373.153
2017

PLASTIC CENTRAL DIVIDERS - (30"/76,2 cm 2010→), (28"/70 cm)(2011→), (32"/80 cm 2015→)

Ref.	Part Number	Description		6R	8R	12R	16R	4+2R 70-76,2cm	4+2R 80cm	5+2R	4+2x2R 70-76,2cm	4+2x2R 80cm	5+2x2R	6+2x3R
1.	1.377.738	Bracket		5	7	11	15	3	-	-	5	-	6	9
1.	*1.378.576	Bracket		5	7	11	15	3	-	-	5	-	6	9
1.	1.373.490	Bracket		-	-	-	-	-	3	-	-	5	-	-
1.	**1.372.003	Bracket		-	-	-	-	-	-	4	-	-	6	-
2.	79408002066	Hex bolt -M8x20 - DIN933/8.8		40	56	88	120	24	24	32	36	36	44	64
3.	91623938761	Spring washer- A8		80	112	176	240	46	46	64	80	80	96	144
4.	1.376.793	Gas spring 1000N		5	7	11	15	3	3	4	5	5	6	9
5.	79408004566	Hex bolt -M8x45 - DIN933/8.8		5	7	11	15	3	3	4	5	5	6	9
6.	70708000066	Lock nut - M8 - DIN980		50	70	110	150	30	30	40	50	50	60	90
7.	79408003566	Hex bolt M8x35 - DIN933/8.8		5	7	11	15	3	3	4	5	5	6	9
8.	1.377.748	Bracket		5	7	11	15	3	3	-	5	5	6	9
8.	*1.378.575	Bracket		5	7	11	15	3	3	4	5	-	6	9
9.	79308005066	Hex bolt M8x50 - DIN931/8.8		10	14	22	30	6	6	8	10	10	12	18
10.	1.314.099	Washer		55	77	121	165	33	33	44	55	55	66	99
11.	76308002066	Carriage bolt -M8x20 - DIN603/8.8		10	14	22	30	6	6	8	10	10	12	18
12.	1.377.465	Cleaning plate - LH		5	7	11	15	3	3	-	5	5	6	9
12.	**1.372.018	Cleaning plate - LH		-	-	-	-	-	-	4	-	-	6	-
13.	1.377.466	Cleaning plate - RH		5	7	11	15	3	3	-	5	5	6	9
13.	**1.372.019	Cleaning plate - RH		-	-	-	-	-	-	4	-	-	6	-
14.	80408001266	Hex socket countersunk-head bolt -M8x12 - DIN7991/8.8		20	28	44	60	12	12	16	20	20	24	36
15.	1.377.533	Rear divider white		5	7	11	15	3	-	-	5	2	6	9
15.	1.377.533.1	Rear divider CASE IH red		5	7	11	15	3	-	-	5	2	6	9
15.	1.377.533.2	Rear divider NH yellow		5	7	11	15	3	-	-	5	2	6	9
15.	1.377.533.3	Rear divider JD green		5	7	11	15	3	-	-	5	2	6	9
15.	1.377.533.4	Rear divider orange		5	7	11	15	3	-	-	5	2	6	9
15.	1.377.533.5	Rear divider Claas green		5	7	11	15	3	-	-	5	2	6	9
15.	1.377.533.6	Rear divider SDF green		5	7	11	15	3	-	-	5	2	6	9
15.	1.377.533.7	Rear divider AGCO red		5	7	11	15	3	-	-	5	2	6	9
15.	1.377.533.8	Rear divider Challenger yellow		5	7	11	15	3	-	-	5	2	6	9
15.	1.377.533.9	Rear divider GLEANER gray		5	7	11	15	3	-	-	5	2	6	9
15.	1.377.533.10	Rear divider chassis gray		5	7	11	15	3	-	-	5	2	6	9
15.	*1.376.700	Rear divider white		5	7	11	15	3	-	-	5	-	6	9
15.	*1.376.700.1	Rear divider CASE IH red		5	7	11	15	3	-	-	5	-	6	9
15.	*1.376.700.2	Rear divider NH yellow		5	7	11	15	3	-	-	5	-	6	9
15.	*1.376.700.3	Rear divider JD green		5	7	11	15	3	-	-	5	-	6	9
15.	*1.376.700.4	Rear divider orange		5	7	11	15	3	-	-	5	-	6	9
15.	*1.376.700.5	Rear divider Claas green		5	7	11	15	3	-	-	5	-	6	9
15.	*1.376.700.6	Rear divider SDF green		5	7	11	15	3	-	-	5	-	6	9
15.	*1.376.700.7	Rear divider AGCO red		5	7	11	15	3	-	-	5	-	6	9
15.	*1.376.700.8	Rear divider Challenger yellow		5	7	11	15	3	-	-	5	-	6	9
15.	*1.376.700.9	Rear divider GLEANER gray		5	7	11	15	3	-	-	5	-	6	9
15.	*1.376.700.10	Rear divider chassis gray		5	7	11	15	3	-	-	5	-	6	9
15.	1.379.509	Rear divider white		-	-	-	-	-	3	-	-	3	-	-
15.	1.379.509.1	Rear divider CASE IH red		-	-	-	-	-	3	-	-	3	-	-
15.	1.379.509.2	Rear divider NH yellow		-	-	-	-	-	3	-	-	3	-	-
15.	1.379.509.3	Rear divider JD green		-	-	-	-	-	3	-	-	3	-	-
15.	1.379.509.4	Rear divider orange		-	-	-	-	-	3	-	-	3	-	-
15.	1.379.509.5	Rear divider Claas green		-	-	-	-	-	3	-	-	3	-	-
15.	1.379.509.6	Rear divider SDF green		-	-	-	-	-	3	-	-	3	-	-
15.	1.379.509.7	Rear divider AGCO red		-	-	-	-	-	3	-	-	3	-	-
15.	1.379.509.8	Rear divider Challenger yellow		-	-	-	-	-	3	-	-	3	-	-
15.	1.379.509.9	Rear divider GLEANER gray		-	-	-	-	-	3	-	-	3	-	-
15.	1.379.509.10	Rear divider chassis gray		-	-	-	-	-	3	-	-	3	-	-
15.	**1.379.508	Rear divider white		-	-	-	-	-	-	4	-	-	6	-
15.	**1.379.508.1	Rear divider CASE IH red		-	-	-	-	-	-	4	-	-	6	-
15.	**1.379.508.2	Rear divider NH yellow		-	-	-	-	-	-	4	-	-	6	-
15.	**1.379.508.3	Rear divider JD green		-	-	-	-	-	-	4	-	-	6	-
15.	**1.379.508.4	Rear divider orange		-	-	-	-	-	-	4	-	-	6	-
15.	**1.379.508.5	Rear divider Claas green		-	-	-	-	-	-	4	-	-	6	-
15.	**1.379.508.6	Rear divider SDF green		-	-	-	-	-	-	4	-	-	6	-
15.	**1.379.508.7	Rear divider AGCO red		-	-	-	-	-	-	4	-	-	6	-
15.	**1.379.508.8	Rear divider Challenger yellow		-	-	-	-	-	-	4	-	-	6	-
15.	**1.379.508.9	Rear divider GLEANER gray		-	-	-	-	-	-	4	-	-	6	-
15.	**1.379.508.10	Rear divider chassis gray		-	-	-	-	-	-	4	-	-	6	-
16.	1.377.462	Support assy		5	7	11	15	3	-	-	5	2	6	9
16.	*1.378.574	Support assy		5	7	11	15	3	-	-	5	-	6	9
16.	**1.373.481	Support assy		-	-	-	-	-	-	4	-	-	6	-
16.	1.373.487	Support assy		-	-	-	-	-	3	-	-	3	-	-
17.	79308005566	Hex bolt M8x55 - DIN931/8.8		10	14	22	30	6	6	8	10	10	12	18
18.	1.353.461	Shaft		10	14	22	30	6	6	8	10	10	12	18
19.	1.353.462	Spacer		10	14	22	30	6	6	8	10	10	12	18
20.	91623938961	Spring washer - A12		10	14	22	30	6	6	8	10	10	12	18
21.	78212003563	Hex socket button-head torx bolt -M12x35 - ISO 7380/10.9		10	14	22	30	6	6	8	10	10	12	18

Note: Application of shims if necessary.
Parts, marked "*" are used for 28"/70 cm row space.
Parts, marked "**" are used for 60 cm row space.

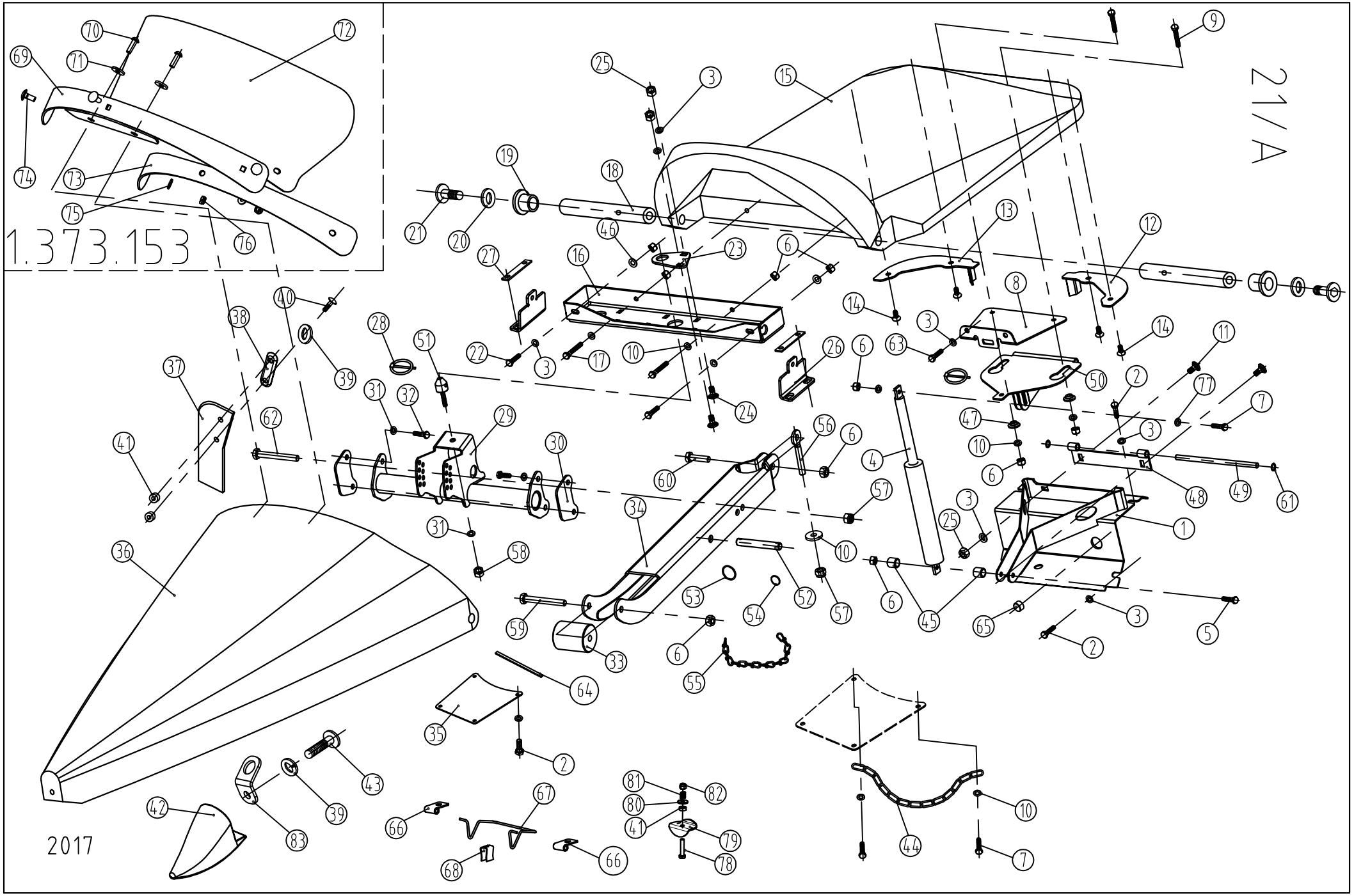
21/A
1.373.153
2017

PLASTIC CENTRAL DIVIDERS - (30"/76,2 cm 2010→), (28"/70 cm)(2011→), (32"/80 cm 2015→)

Ref.	Part Number	Description		6R	8R	12R	16R	4+2R 70-76,2cm	4+2R 80cm	5+2R	4+2x2R 70-76,2cm	4+2x2R 80cm	5+2x2R	6+2x3R
22.	79308004066	Hex bolt M8x40 - DIN931/8.8		10	14	22	30	6	6	8	10	10	12	18
23.	1.354.571	Plate		5	7	11	15	3	3	4	5	5	6	9
24.	76308002066	Carriage bolt -M8x20 - DIN603/8.8		10	14	22	30	6	6	8	10	10	12	18
25.	73508000066	Hex nut M8 - DIN934		20	28	44	60	12	6	4	10	10	24	36
26.	1.377.862	Support		10	14	22	30	6	6	8	10	10	12	18
27.	1.376.747	Flat		10	14	22	30	6	6	8	10	10	12	18
28.	967PSF30526	Lynch pin DIN11023		10	14	22	30	6	6	8	10	10	12	18
29.	1.377.855	Bracket		5	7	11	15	3	-	-	5	-	6	9
29.	*1.378.582	Bracket		5	7	11	15	3	-	-	5	-	6	9
29.	1.373.483	Bracket		-	-	-	-	-	3	-	-	5	-	-
29.	**1.372.001	Bracket		-	-	-	-	-	-	4	-	-	6	-
30.	1.375.957	Shim (1mm)		5	7	11	15	3	3	4	5	5	6	9
30.	1.375.958	Shim (2mm)		5	7	11	15	3	3	4	5	5	6	9
30.	1.372.888	Shim (5mm)		5	7	11	15	3	3	4	5	5	6	9
31.	91623938861	Spring washer - A10		25	35	55	75	15	15	20	25	25	30	45
32.	79410002566	Hex bolt M10x25 - DIN933/8.8		20	28	44	60	12	12	16	20	20	24	36
33.	1.377.902	Roll		5	7	11	15	3	3	4	5	5	6	9
34.	1.378.269	Arm assy		5	7	11	15	3	3	4	5	5	6	9
35.	1.354.667	Plate		5	7	11	15	3	3	4	5	5	6	9
36.	1.377.380	Central snout white		5	7	11	15	3	-	-	5	2	6	9
36.	1.377.380.1	Central snout CASE IH red		5	7	11	15	3	-	-	5	2	6	9
36.	1.377.380.2	Central snout NH yellow		5	7	11	15	3	-	-	5	2	6	9
36.	1.377.380.3	Central snout JD green		5	7	11	15	3	-	-	5	2	6	9
36.	1.377.380.4	Central snout orange		5	7	11	15	3	-	-	5	2	6	9
36.	1.377.380.5	Central snout Claas green		5	7	11	15	3	-	-	5	2	6	9
36.	1.377.380.6	Central snout SDF green		5	7	11	15	3	-	-	5	2	6	9
36.	1.377.380.7	Central snout AGCO red		5	7	11	15	3	-	-	5	2	6	9
36.	1.377.380.8	Central snout Challenger yellow		5	7	11	15	3	-	-	5	2	6	9
36.	1.377.380.9	Central snout GLEANER gray		5	7	11	15	3	-	-	5	2	6	9
36.	1.377.380.10	Central snout chassis gray		5	7	11	15	3	-	-	5	2	6	9
36.	*1.376.099	Central snout white		5	7	11	15	3	-	-	5	-	6	9
36.	*1.376.099.1	Central snout CASE IH red		5	7	11	15	3	-	-	5	-	6	9
36.	*1.376.099.2	Central snout NH yellow		5	7	11	15	3	-	-	5	-	6	9
36.	*1.376.099.3	Central snout JD green		5	7	11	15	3	-	-	5	-	6	9
36.	*1.376.099.4	Central snout orange		5	7	11	15	3	-	-	5	-	6	9
36.	*1.376.099.5	Central snout Claas green		5	7	11	15	3	-	-	5	-	6	9
36.	*1.376.099.6	Central snout SDF green		5	7	11	15	3	-	-	5	-	6	9
36.	*1.376.099.7	Central snout AGCO red		5	7	11	15	3	-	-	5	-	6	9
36.	*1.376.099.8	Central snout Challenger yellow		5	7	11	15	3	-	-	5	-	6	9
36.	*1.376.099.9	Central snout GLEANER gray		5	7	11	15	3	-	-	5	-	6	9
36.	*1.376.099.10	Central snout chassis gray		5	7	11	15	3	-	-	5	-	6	9
36.	1.376.097	Central snout white		-	-	-	-	-	3	-	-	3	-	-
36.	1.376.097.1	Central snout CASE IH red		-	-	-	-	-	3	-	-	3	-	-
36.	1.376.097.2	Central snout NH yellow		-	-	-	-	-	3	-	-	3	-	-
36.	1.376.097.3	Central snout JD green		-	-	-	-	-	3	-	-	3	-	-
36.	1.376.097.4	Central snout orange		-	-	-	-	-	3	-	-	3	-	-
36.	1.376.097.5	Central snout Claas green		-	-	-	-	-	3	-	-	3	-	-
36.	1.376.097.6	Central snout SDF green		-	-	-	-	-	3	-	-	3	-	-
36.	1.376.097.7	Central snout AGCO red		-	-	-	-	-	3	-	-	3	-	-
36.	1.376.097.8	Central snout Challenger yellow		-	-	-	-	-	3	-	-	3	-	-
36.	1.376.097.9	Central snout GLEANER gray		-	-	-	-	-	3	-	-	3	-	-
36.	1.376.097.10	Central snout chassis gray		-	-	-	-	-	3	-	-	3	-	-
36.	**1.373.508	Central snout white		-	-	-	-	-	-	4	-	-	6	-
36.	**1.373.508.1	Central snout CASE IH red		-	-	-	-	-	-	4	-	-	6	-
36.	**1.373.508.2	Central snout NH yellow		-	-	-	-	-	-	4	-	-	6	-
36.	**1.373.508.3	Central snout JD green		-	-	-	-	-	-	4	-	-	6	-
36.	**1.373.508.4	Central snout orange		-	-	-	-	-	-	4	-	-	6	-
36.	**1.373.508.5	Central snout Claas green		-	-	-	-	-	-	4	-	-	6	-
36.	**1.373.508.6	Central snout SDF green		-	-	-	-	-	-	4	-	-	6	-
36.	**1.373.508.7	Central snout AGCO red		-	-	-	-	-	-	4	-	-	6	-
36.	**1.373.508.8	Central snout Challenger yellow		-	-	-	-	-	-	4	-	-	6	-
36.	**1.373.508.9	Central snout GLEANER gray		-	-	-	-	-	-	4	-	-	6	-
36.	**1.373.508.10	Central snout chassis gray		-	-	-	-	-	-	4	-	-	6	-
37.	1.378.053	Rubber earsaver		10	14	22	30	6	6	-	10	10	12	18
37.	**1.379.499	Rubber earsaver		-	-	-	-	-	-	8	-	-	12	-
38.	1.329.164	Washer		10	14	22	30	6	6	8	10	10	12	18
39.	72208000060	Spring washer M8 - DIN 128/A		25	35	55	75	15	15	18	25	25	30	45
40.	78200802063	Hex socket button-head torx bolt M8x20 - ISO7380/10.9		20	28	44	60	12	12	16	20	20	24	36
41.	1.329.747	Spacer		25	35	55	75	15	15	18	25	25	30	45
42.	1.354.310	Skid shoe		5	7	11	15	3	3	4	5	5	6	9
43.	79308009063	Hex bolt M8x90 - DIN931/10.9		5	7	11	15	3	3	4	5	5	6	9
44.	1.379.914	Chain 4X32X15,2		-	-	-	-	-		2	2	2	2	4

Note: Application of shims if necessary.
Parts, marked "*" are used for 28"/70 cm row space.
Parts, marked "**" are used for 60 cm row space.

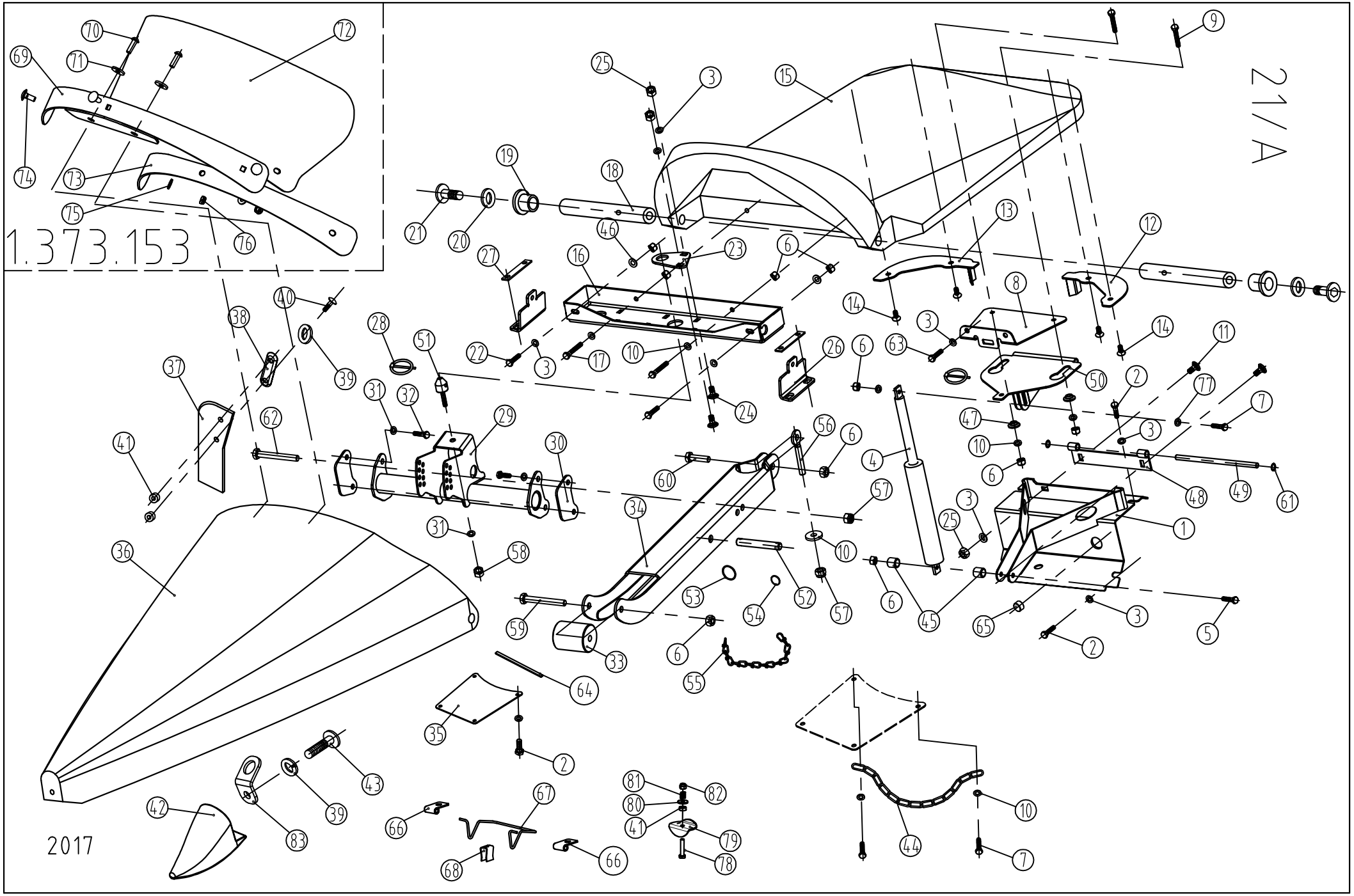
21/A
1.373.153
2017

PLASTIC CENTRAL DIVIDERS - (30"/76,2 cm 2010→), (28"/70 cm)(2011→), (32"/80 cm 2015→)

Ref.	Part Number	Description		6R	8R	12R	16R	4+2R 70-76,2cm	4+2R 80cm	5+2R	4+2x2R 70-76,2cm	4+2x2R 80cm	5+2x2R	6+2x3R
45.	993.454.0	Bushing		10	14	22	30	6	6	8	10	10	12	18
46.	1.314.099	Washer		10	14	22	30	6	6	4	10	10	12	18
47.	1.377.751	Washer		10	14	22	30	6	6	8	10	10	12	18
48.	1.377.741	Hinge		5	7	11	15	3	3	-	5	5	6	9
48.	*1.378.577	Hinge		5	7	11	15	3	-	-	5	-	6	9
										4				
49.	1.377.747	Shaft		5	7	11	15	3	3	-	5	5	6	9
49.	*1.378.578	Shaft		5	7	11	15	3	-	4	5	-	6	9
50.	1.377.744	Hinge		5	7	11	15	3	3	-	5	5	6	9
50.	*1.378.579	Hinge		5	7	11	15	3	-	-	5	-	6	9
50.	**1.372.020	Hinge		-	-	-	-	-	-	4	-	-	6	-
51.	1.310.009	Pin		5	7	11	15	3	3	4	5	5	6	9
52.	1.325.892	Pin	→2014	5	7	11	15	3	3	4	5	5	6	9
53.	1.325.440	Retainer ring	→2014	5	7	11	15	3	3	4	5	5	6	9
54.	67210000011	Ring	→2014	5	7	11	15	3	3	4	5	5	6	9
55.	1.379.913	Chain 2.2x31x10	→2014	5	7	11	15	3	3	4	5	5	6	9
56.	77208004560	Eye-bolt -M8x45 DIN44/LB		5	7	11	15	3	3	4	5	5	6	9
57.	74908000066	Hex nut - plastic insert M8 - DIN985		10	14	22	30	6	6	8	10	10	12	18
58.	70710000066	Lock nut - M10 - DIN980		5	7	11	15	3	3	4	5	5	6	9
59.	79408006566	Hex bolt M8x65 - DIN933/8.8		5	7	11	15	3	3	4	5	5	6	9
60.	79408003066	Hex bolt M8x30 - DIN933/8.8		5	7	11	15	3	3	4	5	5	6	9
61.	70110000001	Toothed washer		10	14	22	30	6	6	8	10	10	12	18
62.	79408008066	Hex bolt M8x80 - DIN933/8.8		10	14	22	30	6	6	8	10	10	12	18
63.	79408001666	Hex bolt M8x16 - DIN933/8.8		10	14	22	30	6	6	8	10	10	12	18
64.	96720070601	Rubber protector - 210 mm	2014.→	5	7	11	15	3	3	4	5	5	6	9
65.	96700000002	Rubber plug		5	7	11	15	3	3	4	5	5	6	9
66.	1.379.152	Hinge		10	14	22	30	6	6	8	10	10	12	18
67.	1.379.151	Spacer		5	7	11	15	3	3	4	5	5	6	9
68.	1.328.006	Spring clamp		5	7	11	15	3	3	4	5	5	6	9
69.	1.373.148	Bracket 28"-30"		4	6	10	14	4	4	5	6	6	7	10
70.	81108001663	Hex socket button-head bolt- M8x16 - ISO7380/10.9		8	12	20	28	8	8	10	12	12	14	20
71.	91623938861	Spring washer - A10		8	12	20	28	8	8	10	12	12	14	20
72.	1.373.152	Rubber earsaver	→2019	4	6	10	14	4	4	5	6	6	7	10
72.	1.372.945	Rubber earsaver	2020.→	4	6	10	14	4	4	5	6	6	7	10
73.	1.373.151	Plate		4	6	10	14	4	4	5	6	6	7	10
74.	76308002566	Carriage bolt M8x25 - DIN603/8.8		12	18	30	42	12	12	15	18	18	21	30
75.	91623938761	Spring washer - A8		12	18	30	42	12	12	15	18	18	21	30
76.	73508000066	Hex nut - M8 - DIN934/8		12	18	30	42	12	12	15	18	18	21	30
77.	71408000060	Washer M8 - DIN125 - 200HV		10	14	22	30	6	6	8	10	10	12	18
78.	79406003066	Hex bolt M6x30 - DIN933/8.8	2016→	5	7	11	15	3	3	4	5	5	6	9
79.	1.373.749	Retainer	2016→	5	7	11	15	3	3	4	5	5	6	9
80.	96702361800	Washer	2016→	5	7	11	15	3	3	4	5	5	6	9
81.	1.327.689	Spring	2016→	5	7	11	15	3	3	4	5	5	6	9
82.	74906000066	Hex nut - plastic insert M6 - DIN985	2016→	5	7	11	15	3	3	4	5	5	6	9
83.	1.372.352	Angle	2017→	5	7	11	15	3	3	4	5	5	6	9
	1.373.153	***Ear saver kit for 28"-30" (items 69 - 76)***	2015.→	***5***	***7***	***11***	***15***	***5***	***5***	***6***	***7***	***7***	***8***	***11***

Note: Application of shims if necessary.
Parts, marked "*" are used for 28"/70 cm row space.
Parts, marked "**" are used for 60 cm row space.

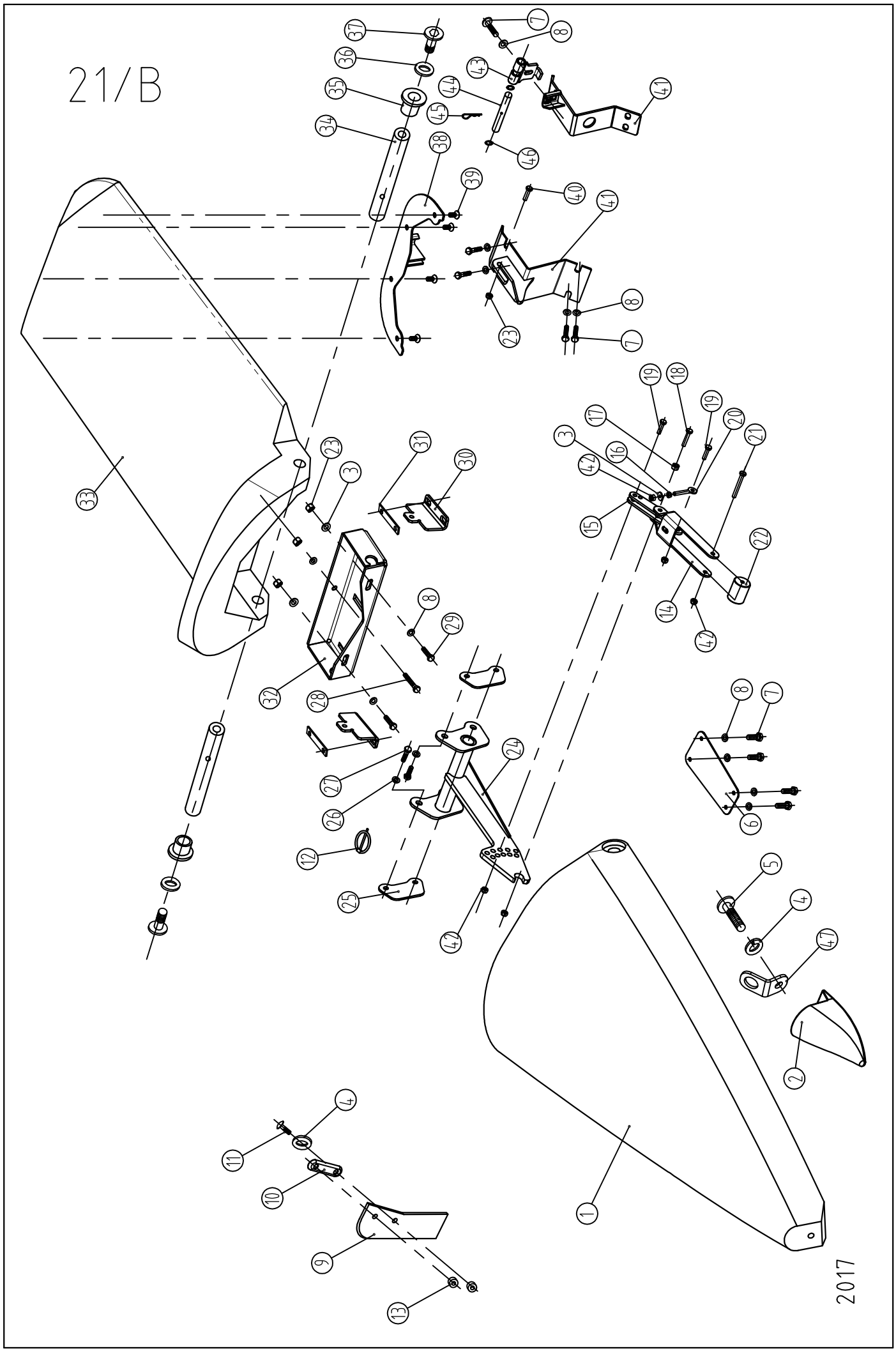
21/B
2017

PLASTIC CENTRAL DIVIDERS - (20";22" / 50;56 cm) (2014→)

Ref.	Part Number	Description		8R 50cm	8R 56cm	12R 50cm	12R 56cm
1.	1.379.502	Central snout white		-	7	-	11
1.	1.379.502.1	Central snout CASE IH red		-	7	-	11
1.	1.379.502.2	Central snout NH yellow		-	7	-	11
1.	1.379.502.3	Central snout JD green		-	7	-	11
1.	1.379.502.4	Central snout orange		-	7	-	11
1.	1.379.502.5	Central snout Claas green		-	7	-	11
1.	1.379.502.6	Central snout SDF green		-	7	-	11
1.	1.379.502.7	Central snout AGCO red		-	7	-	11
1.	1.379.502.8	Central snout Challenger yellow		-	7	-	11
1.	1.379.502.9	Central snout GLEANER gray		-	7	-	11
1.	1.379.502.10	Central snout chassis gray		-	7	-	11
1.	1.379.500	Central snout white		7	-	11	-
1.	1.379.500.1	Central snout CASE IH red		7	-	11	-
1.	1.379.500.2	Central snout NH yellow		7	-	11	-
1.	1.379.500.3	Central snout JD green		7	-	11	-
1.	1.379.500.4	Central snout orange		7	-	11	-
1.	1.379.500.5	Central snout Claas green		7	-	11	-
1.	1.379.500.6	Central snout SDF green		7	-	11	-
1.	1.379.500.7	Central snout AGCO red		7	-	11	-
1.	1.379.500.8	Central snout Challenger yellow		7	-	11	-
1.	1.379.500.9	Central snout GLEANER gray		7	-	11	-
1.	1.379.500.10	Central snout chassis gray		7	-	11	-
2.	1.354.310	Skid shoe		7	7	11	11
3.	1.314.099	Washer		21	21	33	33
4.	72208000060	Spring washer M8 - DIN 128/A		35	35	55	55
5.	79308009063	Hex bolt M8x90 - DIN931/10.9		7	7	11	11
6.	1.355.195	Plate		7	7	11	11
7.	79408002066	Hex bolt M8x20 - DIN933/8.8		42	35	66	55
8.	91623938761	Spring washer - A8		83	70	121	110
9.	1.379.499	Rubber earsaver		14	14	22	22
10.	1.329.164	Washer		14	14	22	22
11.	78200802063	Hex socket button-head torx bolt M8x20		28	28	44	44
12.	967PSF30526	Lynch pin DIN11023		14	14	22	22
13.	1.329.747	Spacer		28	28	44	44
14.	1.379.494	Arm assy		7	7	11	11
15.	1.379.495	Support		14	14	22	22
16.	73508000066	Hex nut - M8 - DIN934/8		7	7	11	11
17.	1.379.516	Bushing		7	7	11	11
18.	79408004066	Hex bolt M8x40 - DIN933/8.8		7	7	11	11
19.	79408003066	Hex bolt M8x30 - DIN933/8.8		14	14	22	22
20.	77208004560	Eye-bolt		7	7	11	11
21.	79308007066	Hex bolt M8x70 - DIN931/8.8		7	7	11	11
22.	1.377.902	Roll		7	7	11	11
23.	70708000066	Lock nut - M8 - DIN980		28	28	44	44
24.	1.379.701	Bracket		-	7	-	11
24.	1.379.496	Bracket		7	-	11	-
25.	1.375.957	Shim (1mm)		7	7	11	11
25.	1.375.958	Shim (2mm)		7	7	11	11
25.	1.372.888	Shim (5mm)		7	7	11	11
26.	91623938861	Spring washer - A10		28	28	44	44
27.	79410002566	Hex bolt - M10x25 - DIN933/8.8		28	28	44	44
28.	79308005566	Hex bolt - M8x55 - DIN931/8.8		7	7	11	11
29.	79308004066	Hex bolt - M8x40 - DIN931/8.8		14	14	22	22
30.	1.377.862	Support		14	14	22	22
31.	1.376.747	Flat		14	14	22	22
32.	1.379.490	Support assy		-	7	-	11
32.	1.379.489	Support assy		7	-	11	-

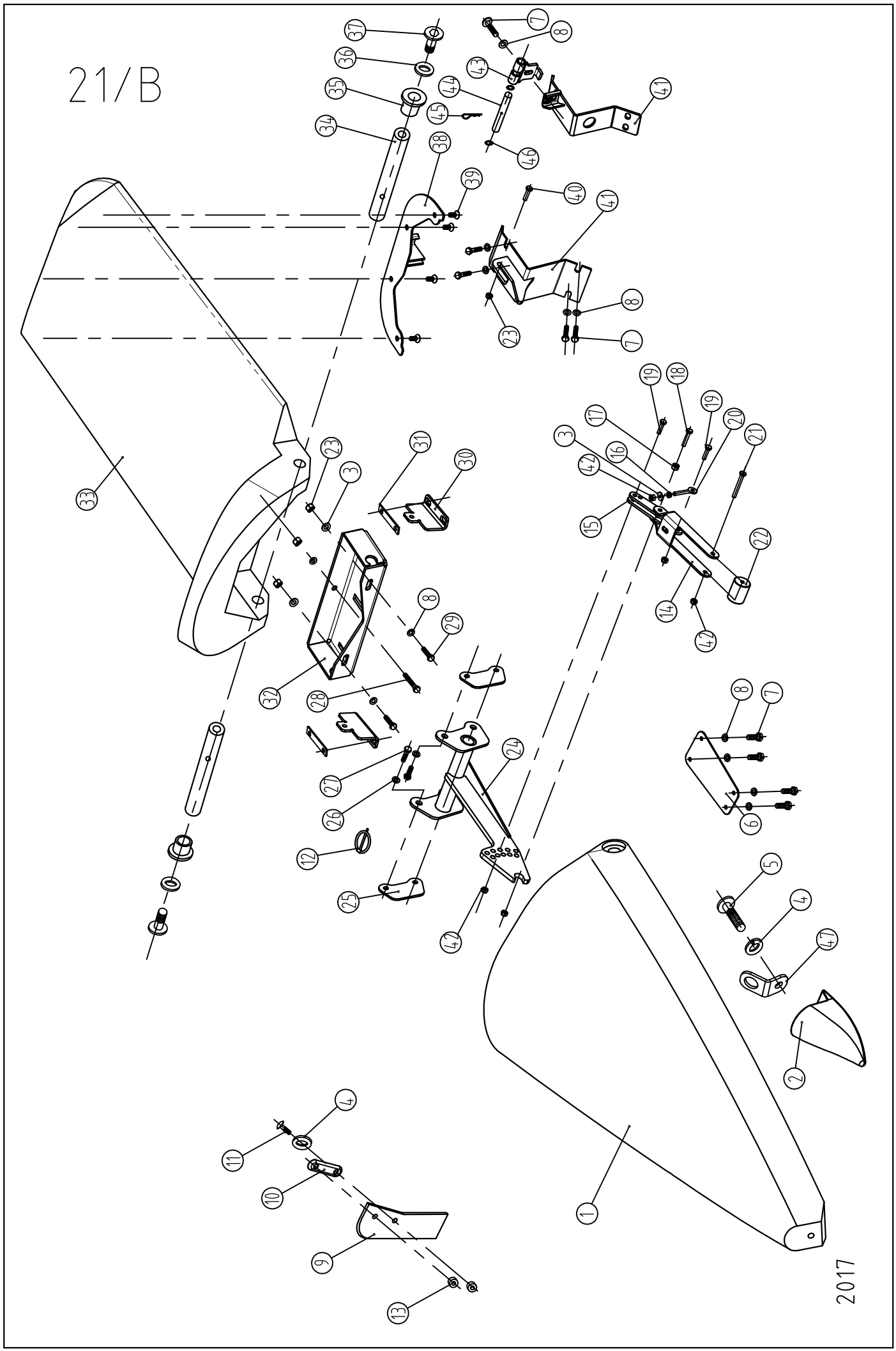
21/B
2017

PLASTIC CENTRAL DIVIDERS - (20";22" / 50;56 cm) (2014→)

Ref.	Part Number	Description		8R 50cm	8R 56cm	12R 50cm	12R 56cm
33.	1.379.503	Rear divider white		-	7	-	11
33.	1.379.503.1	Rear divider CASE IH red		-	7	-	11
33.	1.379.503.2	Rear divider NH yellow		-	7	-	11
33.	1.379.503.3	Rear divider JD green		-	7	-	11
33.	1.379.503.4	Rear divider orange		-	7	-	11
33.	1.379.503.5	Rear divider Claas green		-	7	-	11
33.	1.379.503.6	Rear divider SDF green		-	7	-	11
33.	1.379.503.7	Rear divider AGCO red		-	7	-	11
33.	1.379.503.8	Rear divider Challenger yellow		-	7	-	11
33.	1.379.503.9	Rear divider GLEANER gray		-	7	-	11
33.	1.379.503.10	Rear divider chassis gray		-	7	-	11
33.	1.379.501	Rear divider white		7	-	11	-
33.	1.379.501.1	Rear divider CASE IH red		7	-	11	-
33.	1.379.501.2	Rear divider NH yellow		7	-	11	-
33.	1.379.501.3	Rear divider JD green		7	-	11	-
33.	1.379.501.4	Rear divider orange		7	-	11	-
33.	1.379.501.5	Rear divider Claas green		7	-	11	-
33.	1.379.501.6	Rear divider SDF green		7	-	11	-
33.	1.379.501.7	Rear divider AGCO red		7	-	11	-
33.	1.379.501.8	Rear divider Challenger yellow		7	-	11	-
33.	1.379.501.9	Rear divider GLEANER gray		7	-	11	-
33.	1.379.501.10	Rear divider chassis gray		7	-	11	-
34.	1.353.461	Shaft		14	14	22	22
35.	1.353.462	Spacer		14	14	22	22
36.	91623938961	Spring washer - A12		14	14	22	22
37.	78212003563	Hex socket button - head torx bolt M12x35 - ISO 7380/10.9		14	14	22	22
38.	1.379.704	Bracket		-	7	-	11
38.	1.379.513	Bracket		7	-	11	-
39.	80400802063	Hex socket countersunk-head bolt -M8x20 - DIN7991/8.8		28	28	44	44
40.	79408002566	Hex bolt -M8x25 - DIN933/8.8		7	7	11	11
41.	1.379.702	Bracket		-	7	-	11
41.	1.379.510	Bracket		7	-	11	-
42.	74908000066	Hex nut - plastic insert M8		35	35	55	55
43.	1.379.887	Hinge weld.		7	-	11	-
44.	1.379.889	Shaft		7	-	11	-
45.	72402001660	Cotter pin 2x16		7	-	11	-
46.	70110000001	Toother washer		14	-	22	-
47.	1.372.352	Angle	2017→	7	7	11	11

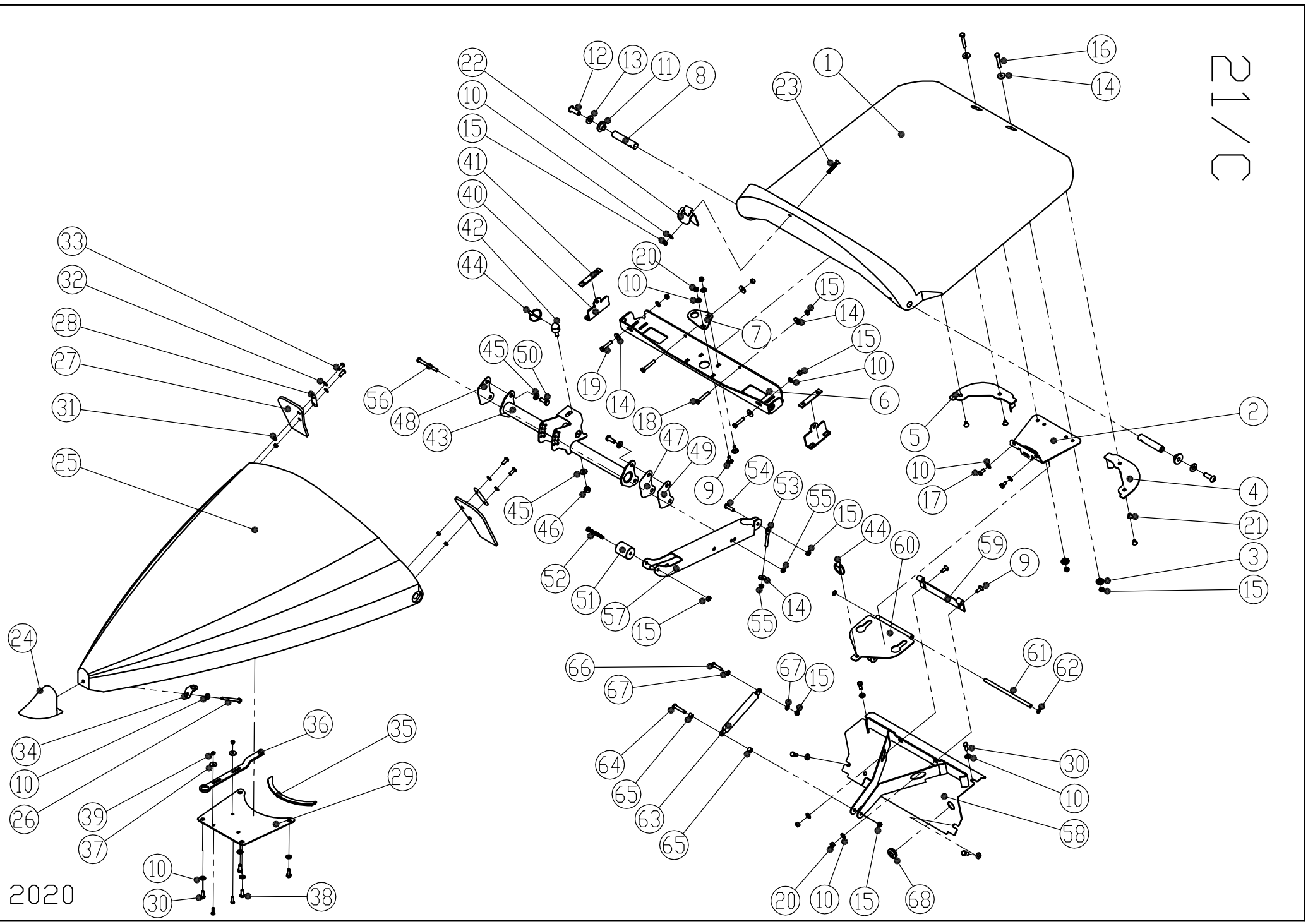
1
2
3
4
5
6
7
8
9
10
11
12
13
14
15
16
17
18
19
20
21
22
23
24
25
26
27
28
29
30
31
32
33
34
35
36
37
38
39
40
41
42
43
44
45
46
47
48
49
50
51
52
53
54
55
56
57
58
59
60
61
62
63
64
65
66
67
68

2020

21/C

PLASTIC CENTRAL DIVIDERS - (38" / 96,5 cm)

Ref.	Part Number	Description		8R 96,5cm
1.	1.373.507	Rear divider white		7
1.	1.373.507.1	Rear divider CASE IH red		7
1.	1.373.507.2	Rear divider NH yellow		7
1.	1.373.507.3	Rear divider JD green		7
1.	1.373.507.4	Rear divider orange		7
1.	1.373.507.5	Rear divider Claas green		7
1.	1.373.507.6	Rear divider SDF green		7
1.	1.373.507.7	Rear divider AGCO red		7
1.	1.373.507.8	Rear divider Challenger yellow		7
1.	1.373.507.9	Rear divider GLEANER gray		7
1.	1.373.507.10	Rear divider chassis gray		7
2.	1.377.748	Plate		7
3.	1.377.751	Washer		14
4.	1.377.465	Bracket left		7
5.	1.377.466	Bracket right		7
6.	1.372.696	Support		7
7.	1.354.571	Plate		7
8.	1.353.461	Shaft		14
9.	76308002066	Carriage bolt M8x20 - DIN603/8.8		28
10.	91623938761	Spring washer - A8		90
11.	1.353.462	Spacer		14
12.	78212003563	Hex socket button - head torx bolt M12x35 - ISO 7380/10.9		14
13.	91623938961	Spring washer - A12		14
14.	96701314099	Washer M8		43
15.	70708000066	Lock nut - M8 - DIN980		58
16.	79308005066	Hex bolt M8x50 - DIN931/8.8		14
17.	79408001666	Hex bolt -M8x16 - DIN933/8.8		14
18.	79308005566	Hex bolt - M8x55 - DIN931/8.8		14
19.	79308004066	Hex bolt - M8x40 - DIN931/8.8		14
20.	73508000066	Hex nut M8 - DIN934		16
21.	80400801266	Hex socket countersunk-head bolt -M8x12 - DIN7991/8.8		28
22.	1.372.816	Retainer		7
23.	80408005063	Hex socket countersunk-head bolt -M8x50 - DIN7991/8.8		7
24.	1.354.310	Skid shoe		7
25.	1.373.506	Central snout white		7
25.	1.373.506.1	Central snout CASE IH red		7
25.	1.373.506.2	Central snout NH yellow		7
25.	1.373.506.3	Central snout JD green		7
25.	1.373.506.4	Central snout orange		7
25.	1.373.506.5	Central snout Claas green		7
25.	1.373.506.6	Central snout SDF green		7
25.	1.373.506.7	Central snout AGCO red		7
25.	1.373.506.8	Central snout Challenger yellow		7
25.	1.373.506.9	Central snout GLEANER gray		7
25.	1.373.506.10	Central snout chassis gray		7
26.	79308009063	Hex bolt M8x90 - DIN931/10.9		7
27.	1.378.053	Rubber earsaver		14
28.	1.329.164	Washer		14
29.	1.354.667	Plate		7
30.	79408002066	Hex bolt M8x20 - DIN933/8.8		32
31.	1.329.747	Spacer		28
32.	72208000060	Spring washer M8 - DIN 128/A		28
33.	78200802063	Hex socket button-head torx bolt M8x20		28

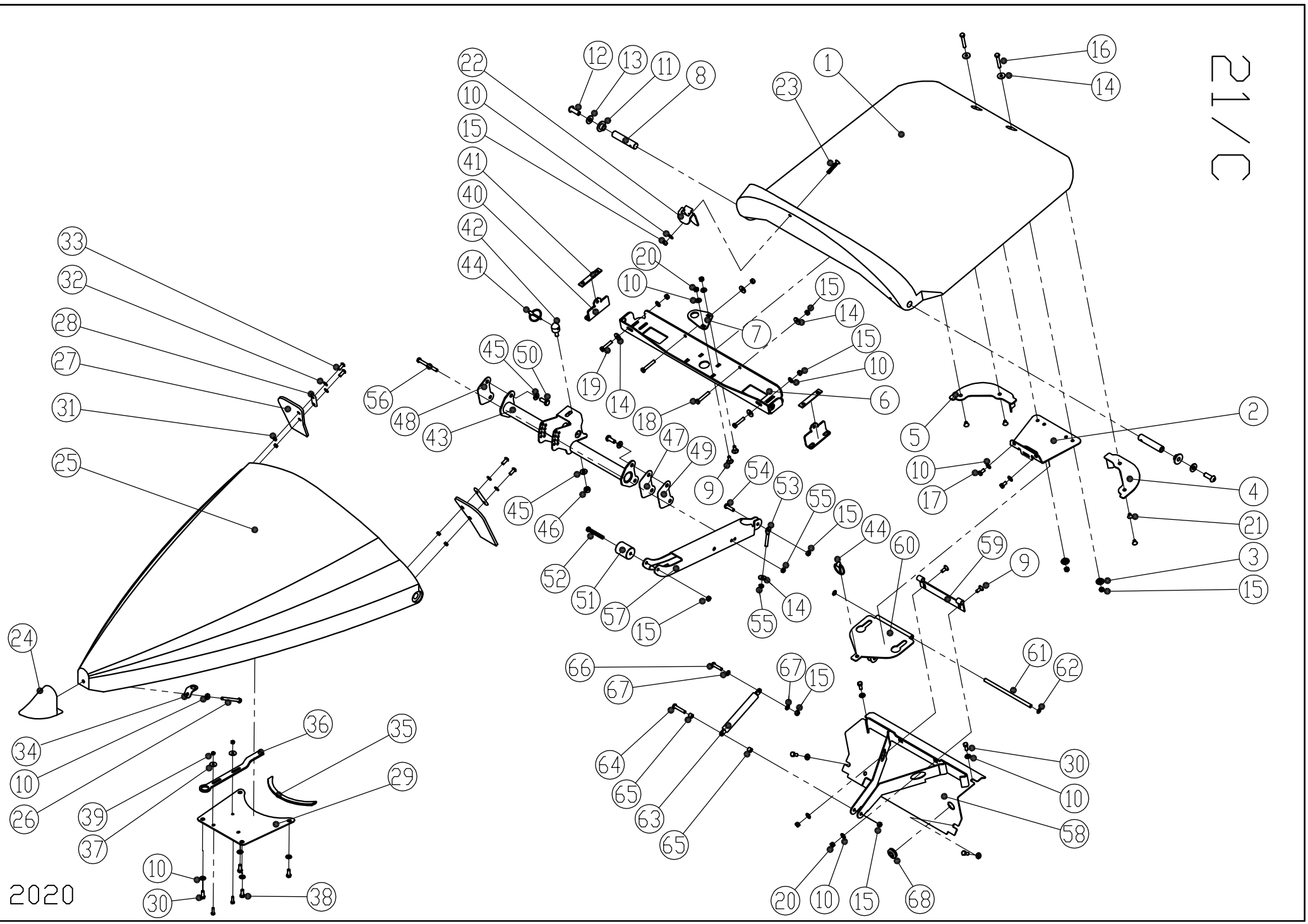
1
2
3
4
5
6
7
8
9
10
11
12
13
14
15
16
17
18
19
20
21
22
23
24
25
26
27
28
29
30
31
32
33
34
35
36
37
38
39
40
41
42
43
44
45
46
47
48
49
50
51
52
53
54
55
56
57
58
59
60
61
62
63
64
65
66
67
68

2020

PLASTIC CENTRAL DIVIDERS - (38" / 96,5 cm)

Ref.	Part Number	Description		8R 96,5cm
34.	1.372.352	Angle		7
35.	96720070601	Rubber protector - 210 mm		7
36.	1.372.893	Retainer		7
37.	96702361800	Washer		14
38.	79406002066	Hex bolt M6x20 - DIN933/8.8		14
39.	74906000066	Hex nut - plastic insert M6 - DIN985		14
40.	1.377.862	Bracket		14
41.	1.376.747	Washer		14
42.	1.310.009	Pin		7
43.	1.372.694	Bracket		7
44.	967PSF30526	Lynch pin DIN11023		14
45.	91623938861	Spring washer - A10		30
46.	70710000066	Lock nut - M10 - DIN980		7
47.	1.375.957	Shim (1mm)		7
48.	1.375.958	Shim (2mm)		7
49.	1.372.888	Shim (5mm)		7
50.	79410002566	Hex bolt M10x25 - DIN933/8.8		28
51.	1.377.902	Roll		7
52.	79408006566	Hex bolt M8x65 - DIN933/8.8		7
53.	77208004560	Eye-bolt -M8x45 DIN44/LB		7
54.	79408003066	Hex bolt M8x30 - DIN933/8.8		7
55.	74908000066	Hex nut - plastic insert M8 - DIN985		14
56.	79408008066	Hex bolt M8x80 - DIN933/8.8		7
57.	1.378.259	Arm assy		7
58.	1.372.692	Bracket		7
59.	1.377.741	Hinge		7
60.	1.377.744	Hinge		7
61.	1.377.747	Shaft		7
62.	70110000001	Toothed washer		14
63.	1.372.915	Gas spring 1400N		7
64.	79408004566	Hex bolt M8x45 - DIN933/8.8		7
65.	993.454.0	Bushing		14
66.	79408003566	Hex bolt M8x35 - DIN933/8.8		7
67.	71408000060	Washer M8 - DIN125 - 200HV		14
68.	96700000002	Rubber plug		7

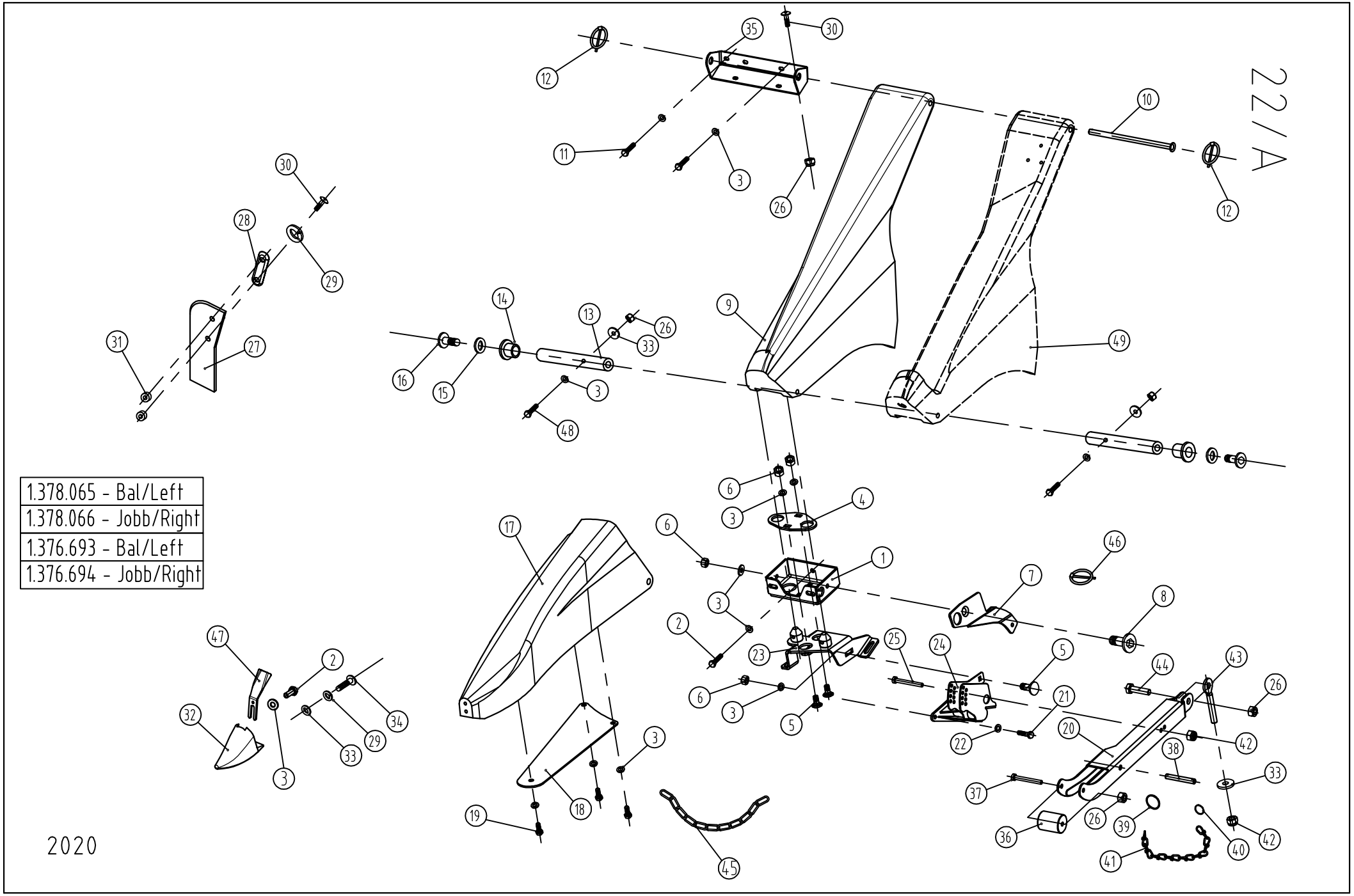
1.378.065 - Bal/Left
1.378.066 - Jobb/Right
1.376.693 - Bal/Left
1.376.694 - Jobb/Right

2020

PLASTIC OUTER DIVIDERS (2010→)

Ref.	Part Number	Description		All models
1.	1.376.662	Support assy		2
2.	79408002066	Hex bolt M8x20 - DIN933/8.8		4
3.	91623938761	Spring washer A8		26
4.	1.376.663	Plate		2
5.	76308002066	Carriage bolt M8x20 - DIN603/8.8		6
6.	73508000066	Hex nut M8 - DIN934		8
7.	1.377.967	Bracket - LH	→2015.	1
7.	1.377.968	Bracket - RH	→2015.	1
7.	1.373.767	Bracket - LH	2016→	1
7.	1.373.768	Bracket - RH	2016→	1
8.	80400802063	Hex socket countersunk-head bolt- M8x20 - DIN7991/10.9		2
9.	1.376.095	Outer divider - LH white		1
9.	1.376.095.1	Outer divider - LH CASE IH red		1
9.	1.376.095.2	Outer divider - LH NH yellow		1
9.	1.376.095.3	Outer divider - LH JD green		1
9.	1.376.095.4	Outer divider - LH orange		1
9.	1.376.095.5	Outer divider - LH Claas green		1
9.	1.376.095.6	Outer divider - LH SDF green		1
9.	1.376.095.7	Outer divider - LH AGCO red		1
9.	1.376.095.8	Outer divider - LH Challenger yellow		1
9.	1.376.095.9	Outer divider - LH GLEANER gray		1
9.	1.376.095.10	Outer divider - LH chassis gray		1
9.	1.376.096	Outer divider - RH white		1
9.	1.376.096.1	Outer divider - RH CASE IH red		1
9.	1.376.096.2	Outer divider - RH NH yellow		1
9.	1.376.096.3	Outer divider - RH JD green		1
9.	1.376.096.4	Outer divider - RH orange		1
9.	1.376.096.5	Outer divider - RH Claas green		1
9.	1.376.096.6	Outer divider - RH SDF green		1
9.	1.376.096.7	Outer divider - RH AGCO red		1
9.	1.376.096.8	Outer divider - RH Challenger yellow		1
9.	1.376.096.9	Outer divider - RH GLEANER gray		1
9.	1.376.096.10	Outer divider - RH chassis gray		1
10.	1.377.087	Hollow shaft	→2017	2
10.	1.372.566	Hollow shaft	2018→	2
11.	81108002563	Hex socket button-head bolt M8x25 ISO7380/10.9		4
12.	967PSF30526	Lynch pin 4.5 DIN11023		4
13.	1.353.461	Shaft		3
13.	1.376.677	Shaft - RH **(see note below!)**		1
14.	1.353.462	Spacer		4
15.	91623938961	Spring washer A12		4
16.	78212003563	Hex socket button-head torx bolt -M12x35 - ISO 7380/10.9		4
17.	1.371.093	Outer snout - LH white		1
17.	1.371.093.1	Outer snout - LH CASE IH red		1
17.	1.371.093.2	Outer snout - LH NH yellow		1
17.	1.371.093.3	Outer snout - LH JD green		1
17.	1.371.093.4	Outer snout - LH orange		1
17.	1.371.093.5	Outer snout - LH Claas green		1
17.	1.371.093.6	Outer snout - LH SDF green		1
17.	1.371.093.7	Outer snout - LH AGCO red		1
17.	1.371.093.8	Outer snout - LH Challenger yellow		1
17.	1.371.093.9	Outer snout - LH GLEANER gray		1
17.	1.371.093.10	Outer snout - LH chassis gray		1
17.	1.371.094	Outer snout - RH white		1
17.	1.371.094.1	Outer snout - RH CASE IH red		1
17.	1.371.094.2	Outer snout - RH NH yellow		1
17.	1.371.094.3	Outer snout - RH JD green		1
17.	1.371.094.4	Outer snout - RH orange		1
17.	1.371.094.5	Outer snout - RH Claas green		1
17.	1.371.094.6	Outer snout - RH SDF green		1

Note: 1.376.677 item 13 only for the RH outer divider !
1.376.721 and 1.376.722 item 35 are only for 6-row rigid models
* In case of Rotary divider

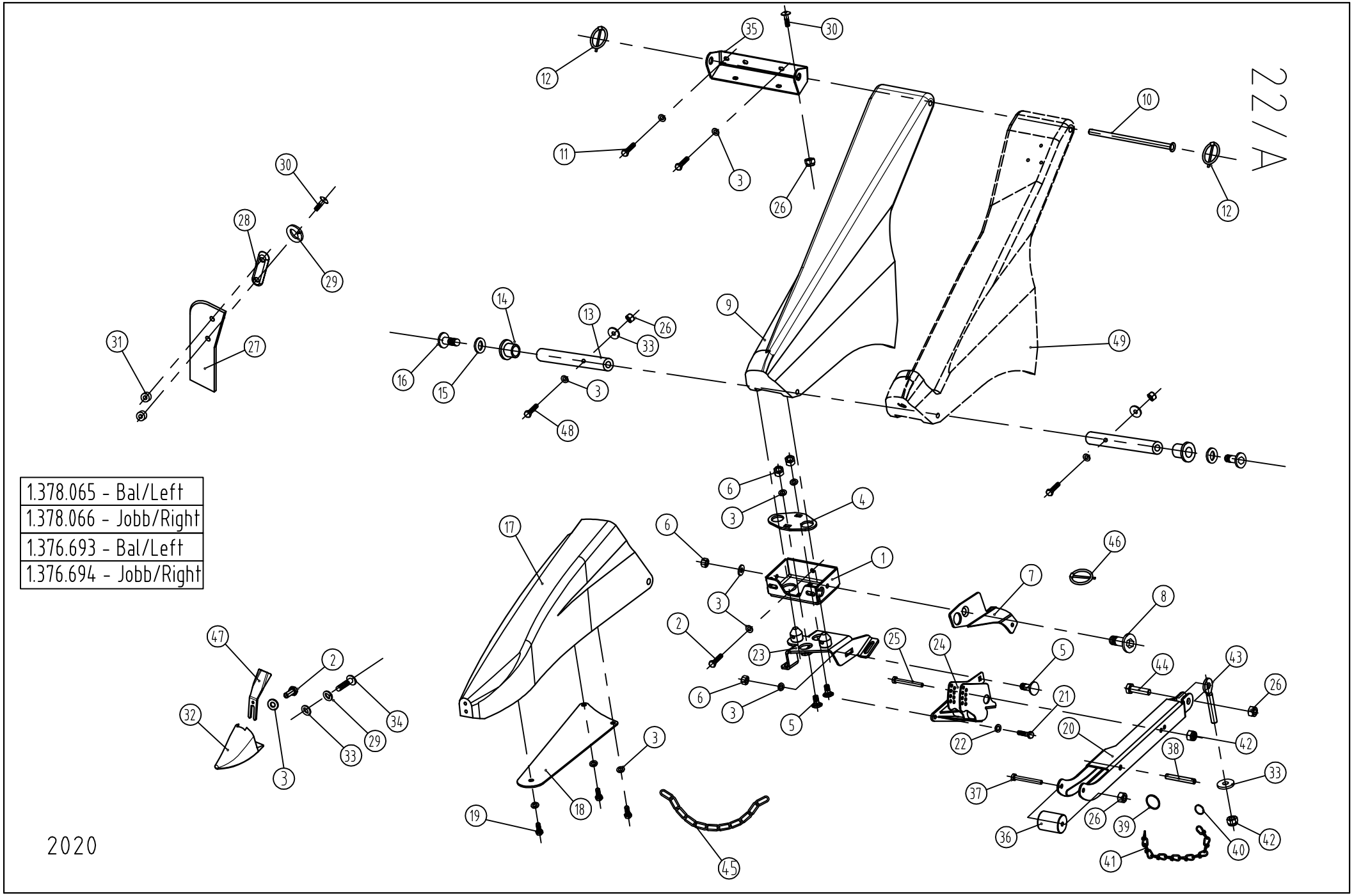
1.378.065 - Bal/Left
1.378.066 - Jobb/Right
1.376.693 - Bal/Left
1.376.694 - Jobb/Right

2020

PLASTIC OUTER DIVIDERS (2010→)

Ref.	Part Number	Description		All models
17.	1.371.094.7	Outer snout - RH AGCO red		1
17.	1.371.094.8	Outer snout - RH Challenger yellow		1
17.	1.371.094.9	Outer snout - RH GLEANER gray		1
17.	1.371.094.10	Outer snout - RH chassis gray		1
18.	1.376.676	Plate		2
19.	79408001666	Hex bolt -M8x16 - DIN933/8.8		6
20.	1.377.975	Bracket - LH	→2019.	1
20.	1.377.976	Bracket - RH	→2019.	1
20.	1.372.861	Bracket - LH	2020.→	1
20.	1.372.862	Bracket - RH	2020.→	1
21.	79410002566	Hex bolt -M10x25 - DIN933/8.8		6
22.	91623938861	Spring washer A10		6
23.	1.377.969	Support assy - LH	→2015.	1
23.	1.377.970	Support assy - RH	→2015.	1
23.	1.373.772	Support assy - LH	2016→	1
23.	1.373.773	Support assy - RH	2016→	1
24.	1.377.960	Arm assy - LH		1
24.	1.377.961	Arm assy - RH		1
25.	79408006066	Hex bolt -M8x60 - DIN933/8.8		2
26.	70708000066	Lock nut VM8 DIN980		12
27.	1.329.163	Rubber earsaver		2
28.	1.329.164	Washer		2
29.	72208000060	Spring washer -M8 - DIN 128/A		4
30.	78200802063	Hex socket button-head torx bolt M8x20 ISO7380/10.9		8
31.	1.329.747	Spacer		4
32.	1.354.310	Skid shoe	→2015	2
32.	1.373.997	Skid shoe	2016→	2
33.	1.314.099	Washer		8
34.	79308010063	Hex bolt -M8x100 - DIN931/10.9		2
35.	1.377.086	Console		2
35.	1.376.721	Console - LH **(see note below!)**	→2010	1
35.	1.376.722	Console - RH **(see note below!)**	→2010	1
36.	1.377.902	Roll		2
37.	79408006566	Hex bolt -M8x65 - DIN933/8.8		2
38.	1.325.892	Pin	→2014	2
39.	1.325.440	Retainer ring	→2014	2
40.	67210000011	Ring	→2014	2
41.	1.379.913	Chain 2.2x31x10	→2014	2
42.	74908000066	Hex nut - plastic insert M8 - DIN985		4
43.	77208004560	Eye-bolt -M8x45 DIN44/LB		2
44.	79408003066	Hex bolt -M8x30 - DIN933/8.8		2
45.*	1.379.914	Chain 4x32x15.2		2
46.	96716002720	Lynch pin 6x27 DIN1382	2016→	2
47.	1.373.998	Cover plate	2016→	2
48.	79308004066	Hex bolt M8x40 - DIN931/8.8		4
49.		Outer divider for RED - **See items 21. on page 55.!**		
	1.378.065	Outer divider assy - LH white (items 1- 16, 20-26, 30, 33, 35 -37, 42-44, and 46)		1
	1.378.065.1	Outer divider assy - LH CASE IH red (items 1- 16, 20-26, 30, 33, 35 -37, 42-44, and 46)		1
	1.378.065.2	Outer divider assy - LH NH yellow (items 1- 16, 20-26, 30, 33, 35 -37, 42-44, and 46)		1
	1.378.065.3	Outer divider assy - LH - JD green (items 1- 16, 20-26, 30, 33, 35 -37, 42-44, and 46)		1
	1.378.065.4	Outer divider assy - LH orange (items 1- 16, 20-26, 30, 33, 35 -37, 42-44, and 46)		1
	1.378.065.5	Outer divider assy - LH CLAAS green (items 1- 16, 20-26, 30, 33, 35 -37, 42-44, and 46)		1
	1.378.065.6	Outer divider assy - LH SDF green (items 1- 16, 20-26, 30, 33, 35 -37, 42-44, and 46)		1
	1.378.065.7	Outer divider assy - LH AGCO red (items 1- 16, 20-26, 30, 33, 35 -37, 42-44, and 46)		1
	1.378.065.8	Outer divider assy - LH Challenger yellow (items 1- 16, 20-26, 30, 33, 35 -37, 42-44, and 46)		1
	1.378.065.9	Outer divider assy - LH GLEANER gray (items 1- 16, 20-26, 30, 33, 35 -37, 42-44, and 46)		1
	1.378.065.10	Outer divider assy - LH chassis gray (items 1- 16, 20-26, 30, 33, 35 -37, 42-44, and 46)		1
	1.378.066	Outer divider assy - RH white (items 1- 16, 20-26, 30, 33, 35 -37, 42-44, and 46)		1
	1.378.066.1	Outer divider assy - RH CASE IH red (items 1- 16, 20-26, 30, 33, 35 -37, 42-44, and 46)		1
	1.378.066.2	Outer divider assy - RH NH yellow (items 1- 16, 20-26, 30, 33, 35 -37, 42-44, and 46)		1
	1.378.066.3	Outer divider assy - RH - JD green (items 1- 16, 20-26, 30, 33, 35 -37, 42-44, and 46)		1
	1.378.066.4	Outer divider assy - RH orange (items 1- 16, 20-26, 30, 33, 35 -37, 42-44, and 46)		1

Note: 1.376.677 item 13 only for the RH outer divider !
1.376.721 and 1.376.722 item 35 are only for 6-row rigid models
* In case of Rotary divider

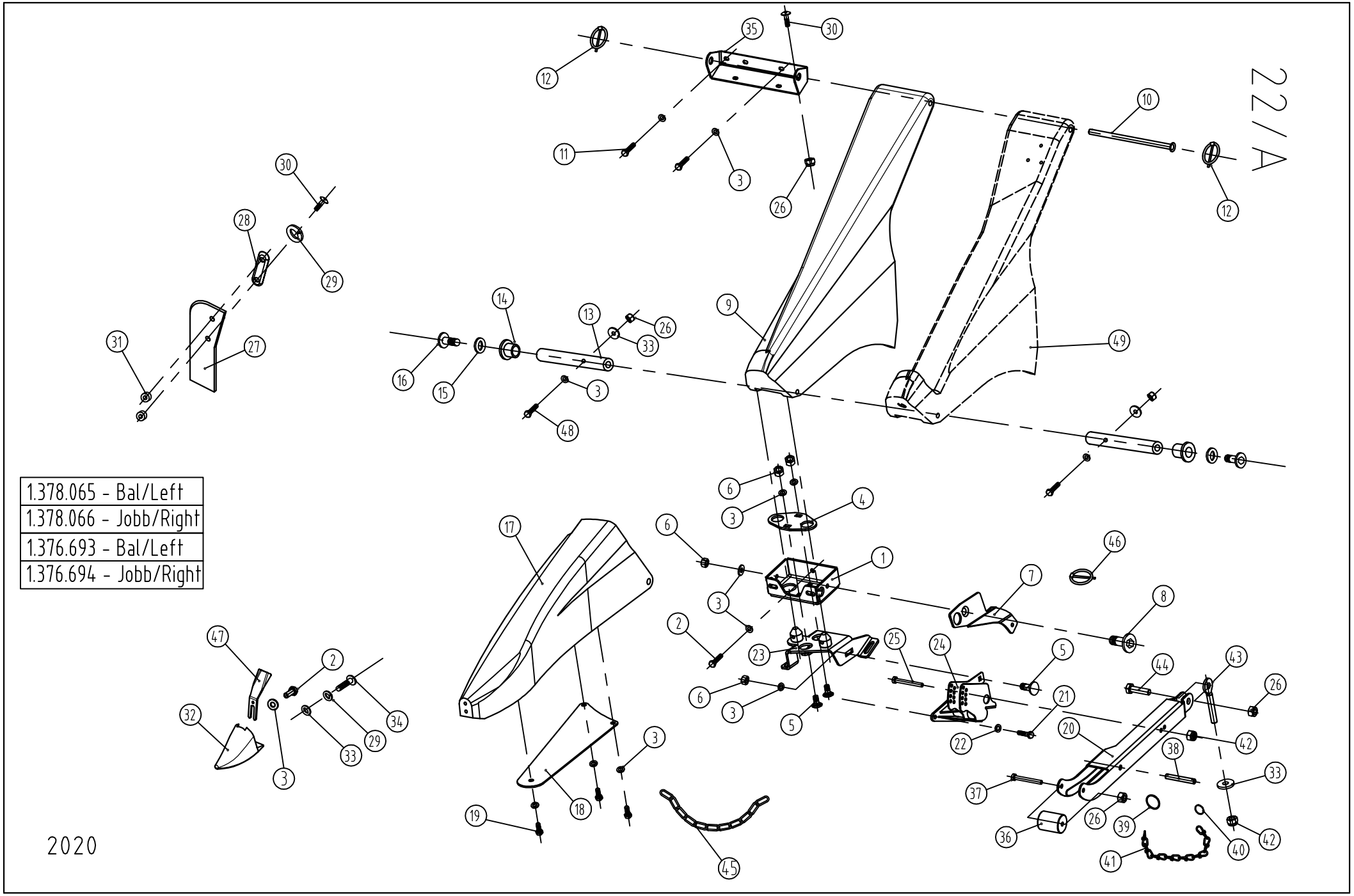
1.378.065 - Bal/Left
1.378.066 - Jobb/Right
1.376.693 - Bal/Left
1.376.694 - Jobb/Right

2020

PLASTIC OUTER DIVIDERS (2010→)

Ref.	Part Number	Description		All models
	1.378.066.5	Outer divider assy - RH CLAAS green (items 1- 16, 20-26, 30, 33, 35 -37, 42-44, and 46)		1
	1.378.066.6	Outer divider assy - RH SDF green (items 1- 16, 20-26, 30, 33, 35 -37, 42-44, and 46)		1
	1.378.066.7	Outer divider assy - RH AGCO red (items 1- 16, 20-26, 30, 33, 35 -37, 42-44, and 46)		1
	1.378.066.8	Outer divider assy - RH Challenger yellow (items 1- 16, 20-26, 30, 33, 35 -37, 42-44, and 46)		1
	1.378.066.9	Outer divider assy - RH GLEANER gray (items 1- 16, 20-26, 30, 33, 35 -37, 42-44, and 46)		1
	1.378.066.10	Outer divider assy - RH chassis gray (items 1- 16, 20-26, 30, 33, 35 -37, 42-44, and 46)		1
	1.376.693	Outer snout assy - LH white (items 3, 17-19, 27-34)		1
	1.376.693.1	Outer snout assy - LH CASE IH red (items 3, 17-19, 27-34)		1
	1.376.693.2	Outer snout assy - LH NH yellow (items 3, 17-19, 27-34)		1
	1.376.693.3	Outer snout assy - LH - JD green (items 3, 17-19, 27-34)		1
	1.376.693.4	Outer snout assy - LH orange (items 3, 17-19, 27-34)		1
	1.376.693.5	Outer snout assy - LH CLAAS green (items 3, 17-19, 27-34)		1
	1.376.693.6	Outer snout assy - LH SDF green (items 3, 17-19, 27-34)		1
	1.376.693.7	Outer snout assy - LH AGCO red (items 3, 17-19, 27-34)		1
	1.376.693.8	Outer snout assy - LH Challenger yellow (items 3, 17-19, 27-34)		1
	1.376.693.9	Outer snout assy - LH GLEANER gray (items 3, 17-19, 27-34)		1
	1.376.693.10	Outer snout assy - LH chassis gray (items 3, 17-19, 27-34)		1
	1.376.694	Outer snout assy - RH white (items 3, 17-19, 27-34)		1
	1.376.694.1	Outer snout assy - RH CASE IH red (items 3, 17-19, 27-34)		1
	1.376.694.2	Outer snout assy - RH NH yellow (items 3, 17-19, 27-34)		1
	1.376.694.3	Outer snout assy - RH - JD green (items 3, 17-19, 27-34)		1
	1.376.694.4	Outer snout assy - RH orange (items 3, 17-19, 27-34)		1
	1.376.694.5	Outer snout assy - RH CLAAS green (items 3, 17-19, 27-34)		1
	1.376.694.6	Outer snout assy - RH SDF green (items 3, 17-19, 27-34)		1
	1.376.694.7	Outer snout assy - RH AGCO red (items 3, 17-19, 27-34)		1
	1.376.694.8	Outer snout assy - RH Challenger yellow (items 3, 17-19, 27-34)		1
	1.376.694.9	Outer snout assy - RH GLEANER gray (items 3, 17-19, 27-34)		1
	1.376.694.10	Outer snout assy - RH chassis gray (items 3, 17-19, 27-34)		1

Note: 1.376.677 item 13 only for the RH outer divider !
1.376.721 and 1.376.722 item 35 are only for 6-row rigid models
* In case of Rotary divider

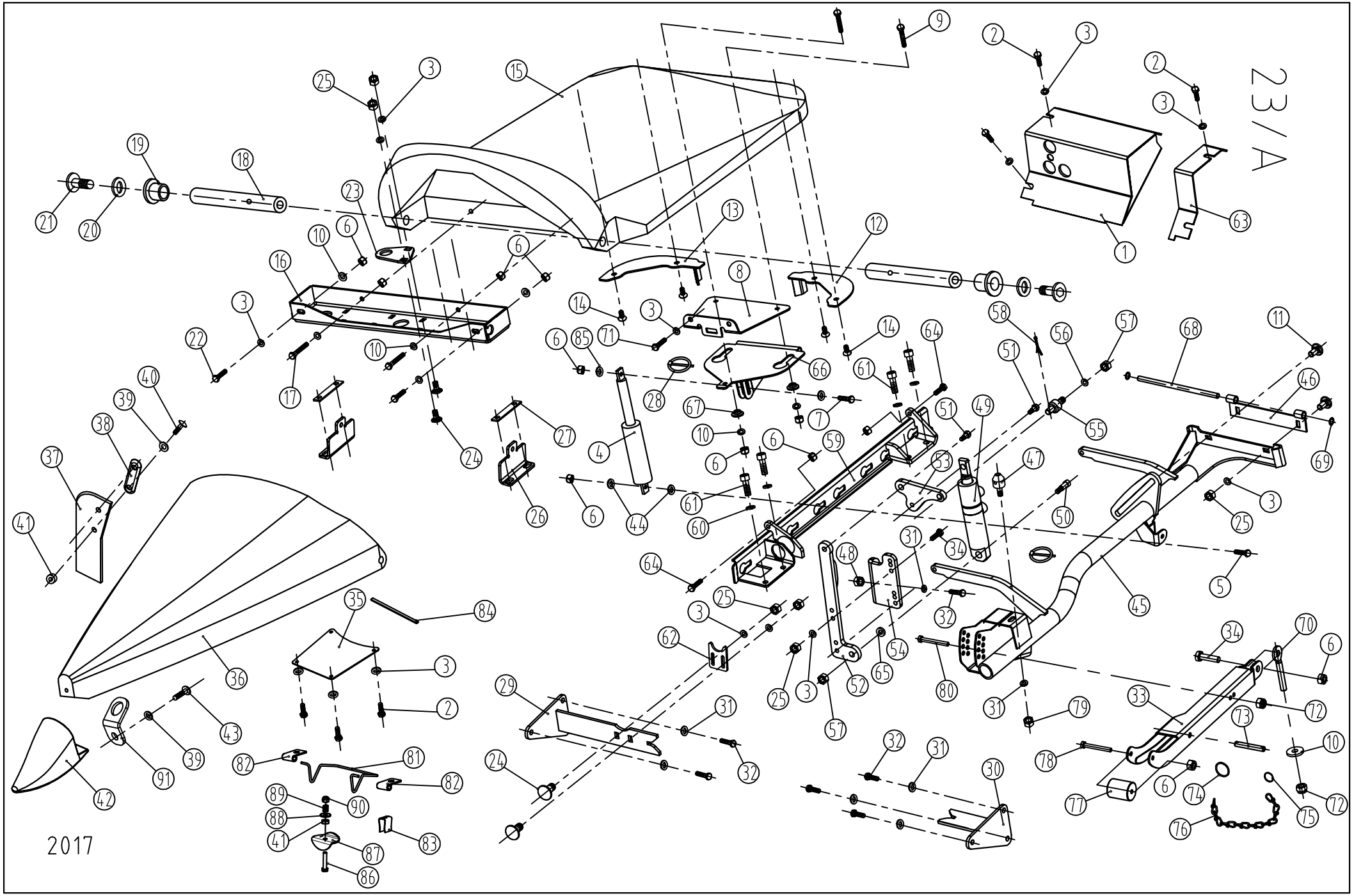
23/A
2017

PLASTIC HINGED DIVIDERS - folding models (30"/76,2cm 2010→), (28"/70cm 2015→), (32"/80 cm 2015→)

Ref.	Part Number	Description		4+2R	4+2x2R	6+2x3R
1.	1.376.039	Bracket - LH	→2015	1	1	1
1.	1.376.041	Bracket - LH	2016→	1	1	1
1.	1.376.040	Bracket - RH	→2015	1	1	1
1.	1.376.042	Bracket - RH	2016→	1	1	1
1.	*1.377.199	Bracket - LH	→2015	1	1	1
1.	*1.377.201	Bracket - LH	2016→	1	1	1
1.	*1.377.200	Bracket - RH	→2015	1	1	1
1.	*1.377.202	Bracket - RH	2016→	1	1	1
1.	**1.373.590	Bracket - LH	→2015	1	1	1
1.	**1.373.592	Bracket - LH	2016→	1	1	1
1.	**1.373.591	Bracket - RH	→2015	1	1	1
1.	**1.373.593	Bracket - RH	2016→	1	1	1
2.	79408002066	Hex bolt M8x20 - DIN933/8.8		16	16	16
3.	91623938761	Spring washer - A8		40	40	40
4.	1.376.793	Gas spring 1000N		2	2	2
5.	79408004566	Hex bolt M8x45 - DIN933/8.8		2	2	2
6.	70708000066	Lock nut - DIN980 - M8		24	24	24
7.	79408003566	Hex bolt M8x35 - DIN933/8.8		2	2	2
8.	1.377.748	Bracket		2	2	2
8.	*1.378.575	Bracket		2	2	2
9.	79308005066	Hex bolt M8x50 - DIN931/8.8		4	4	4
10.	1.314.099	Washer		14	14	14
11.	76308002066	Carriage bolt M8x20 - DIN603/8.8		8	8	8
12.	1.377.465	Cleaning plate - LH		2	2	2
13.	1.377.466	Cleaning plate - RH		2	2	2
14.	80408001266	Hex socket countersunk-head bolt M8x12 - DIN7991/8.8		8	8	8
15.	1.377.534	Rear divider white		2	2	2
15.	1.377.534.1	Rear divider CASE IH red		2	2	2
15.	1.377.534.2	Rear divider NH yellow		2	2	2
15.	1.377.534.3	Rear divider JD green		2	2	2
15.	1.377.534.4	Rear divider orange		2	2	2
15.	1.377.534.5	Rear divider Claas green		2	2	2
15.	1.377.534.6	Rear divider SDF green		2	2	2
15.	1.377.534.7	Rear divider AGCO red		2	2	2
15.	1.377.534.8	Rear divider Challenger yellow		2	2	2
15.	1.377.534.9	Rear divider GLEANER gray		2	2	2
15.	1.377.534.10	Rear divider chassis gray		2	2	2
15.	*1.379.507	Rear divider white		2	2	2
15.	*1.379.507.1	Rear divider CASE IH red		2	2	2
15.	*1.379.507.2	Rear divider NH yellow		2	2	2
15.	*1.379.507.3	Rear divider JD green		2	2	2
15.	*1.379.507.4	Rear divider orange		2	2	2
15.	*1.379.507.5	Rear divider Claas green		2	2	2
15.	*1.379.507.6	Rear divider SDF green		2	2	2
15.	*1.379.507.7	Rear divider AGCO red		2	2	2
15.	*1.379.507.8	Rear divider Challenger yellow		2	2	2
15.	*1.379.507.9	Rear divider GLEANER gray		2	2	2
15.	*1.379.507.10	Rear divider chassis gray		2	2	2
15.	**1.379.509	Rear divider white		2	2	2
15.	**1.379.509.1	Rear divider CASE IH red		2	2	2
15.	**1.379.509.2	Rear divider NH yellow		2	2	2
15.	**1.379.509.3	Rear divider JD green		2	2	2
15.	**1.379.509.4	Rear divider orange		2	2	2
15.	**1.379.509.5	Rear divider Claas green		2	2	2
15.	**1.379.509.6	Rear divider SDF green		2	2	2

Note: Item 60 and 61 are the same as item 6 and 4 pg. 11/A.
Parts, marked "*" are used only for 28"/70 cm row space,
Parts, marked "**" are used only for 80 cm row space

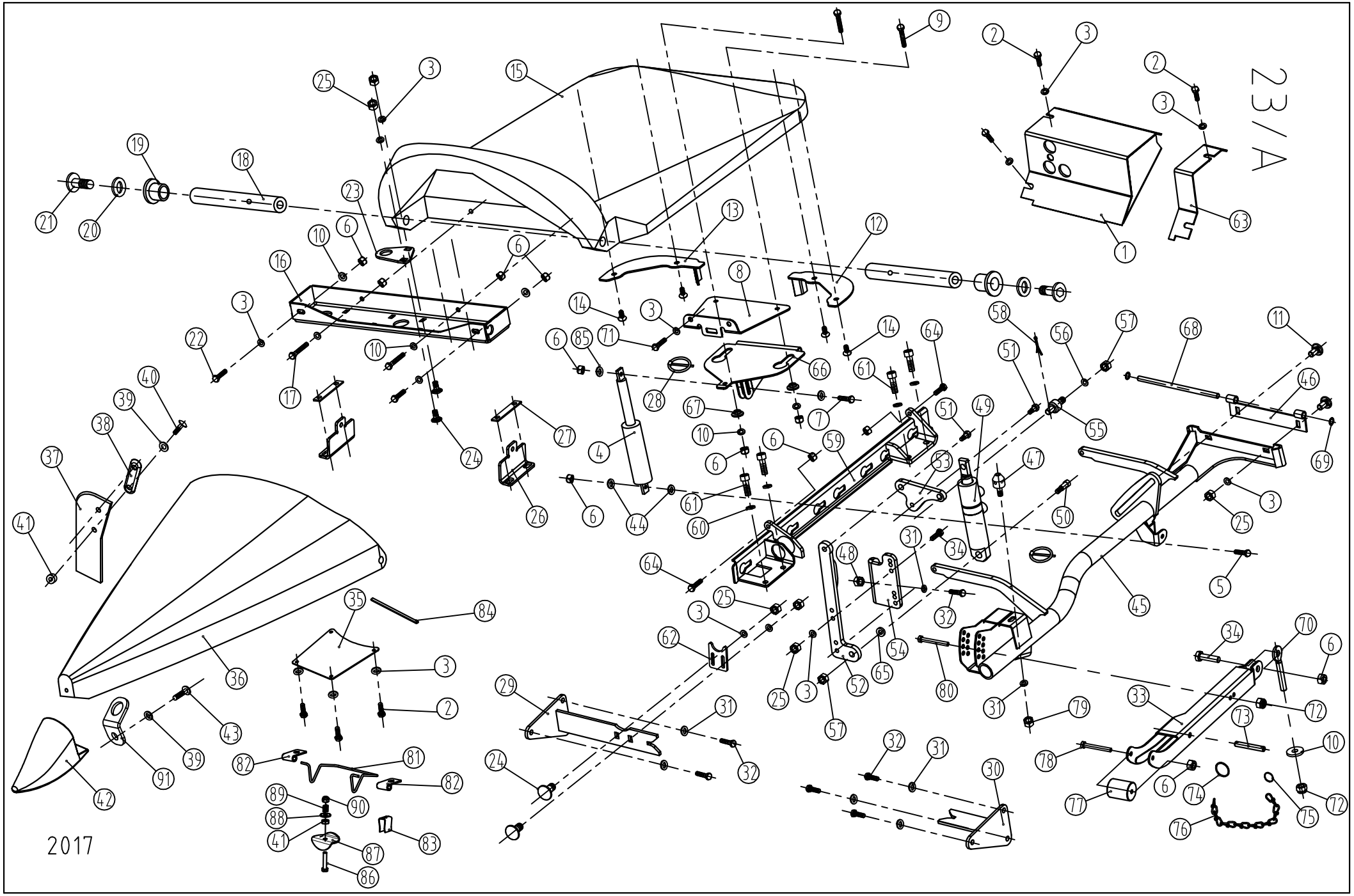
23/A
2017

PLASTIC HINGED DIVIDERS - folding models (30"/76,2cm 2010→), (28"/70cm 2015→), (32"/80 cm 2015→)

Ref.	Part Number	Description		4+2R	4+2x2R	6+2x3R
15.	**1.379.509.7	Rear divider AGCO red		2	2	2
15.	**1.379.509.8	Rear divider Challenger yellow		2	2	2
15.	**1.379.509.9	Rear divider GLEANER gray		2	2	2
15.	**1.379.509.10	Rear divider chassis gray		2	2	2
16.	1.377.462	Support assy		2	2	2
16.	*1.378.574	Support assy		2	2	2
16.	**1.373.487	Support assy		2	2	2
17.	79308005566	Hex bolt M8x55 - DIN931/8.8		4	4	4
18.	1.353.461	Shaft		4	4	4
19.	1.353.462	Spacer		4	4	4
20.	91623938961	Spring washer - A12		4	4	4
21.	78212003563	Hex socket button-head torx bolt M12x35 - ISO 7380/10.9		4	4	4
22.	79308004066	Hex bolt M8x40 - DIN931/8.8		4	4	4
23.	1.354.571	Plate		2	2	2
24.	76308002566	Carriage bolt M8x25 - DIN603/8.8		4	4	4
25.	73508000066	Hex nut M8 - DIN934		16	16	16
26.	1.377.862	Support		4	4	4
27.	1.376.747	Flat		4	4	4
28.	967PSF30526	Lynch pin DIN11023		4	4	4
29.	1.377.023	Support - LH		1	1	1
29.	*1.377.213	Support - LH		1	1	1
29.	**1.373.612	Support - LH		1	1	1
29.	1.377.024	Support - RH		1	1	1
29.	*1.377.214	Support - RH		1	1	1
29.	**1.373.613	Support - RH		1	1	1
30.	1.377.025	Support - LH		1	1	1
30.	*1.377.215	Support - LH		1	1	1
30.	**1.373.614	Support - LH		1	1	1
30.	1.377.026	Support - RH		1	1	1
30.	*1.377.216	Support - RH		1	1	1
30.	**1.373.615	Support - RH		1	1	1
31.	91623938861	Spring washer - A10		19	19	19
32.	79410002566	Hex bolt M10x25 - DIN933/8.8		17	17	17
33.	1.377.975	Arm assy LH - to the RH of header	→2019.	1	1	1
33.	1.377.976	Arm assy RH - to the LH of header	→2019.	1	1	1
33.	1.372.861	Arm assy LH - to the RH of header	2020.→	1	1	1
33.	1.372.862	Arm assy RH - to the LH of header	2020.→	1	1	1
34.	79408003066	Hex bolt M8x30 - DIN933/8.8		6	6	6
35.	1.354.667	Plate		2	2	2
36.	1.377.380	Central snout white		2	2	2
36.	1.377.380.1	Central snout CASE IH red		2	2	2
36.	1.377.380.2	Central snout NH yellow		2	2	2
36.	1.377.380.3	Central snout JD green		2	2	2
36.	1.377.380.4	Central snout orange		2	2	2
36.	1.377.380.5	Central snout Claas green		2	2	2
36.	1.377.380.6	Central snout SDF green		2	2	2
36.	1.377.380.7	Central snout AGCO red		2	2	2
36.	1.377.380.8	Central snout Challenger yellow		2	2	2
36.	1.377.380.9	Central snout GLEANER gray		2	2	2
36.	1.377.380.10	Central snout chassis gray		2	2	2
36.	*1.376.099	Central snout white		2	2	2
36.	*1.376.099.1	Central snout CASE IH red		2	2	2
36.	*1.376.099.2	Central snout NH yellow		2	2	2
36.	*1.376.099.3	Central snout JD green		2	2	2

Note: Item 60 and 61 are the same as item 6 and 4 pg. 11/A.
Parts, marked "*" are used only for 28"/70 cm row space,
Parts, marked "**" are used only for 80 cm row space

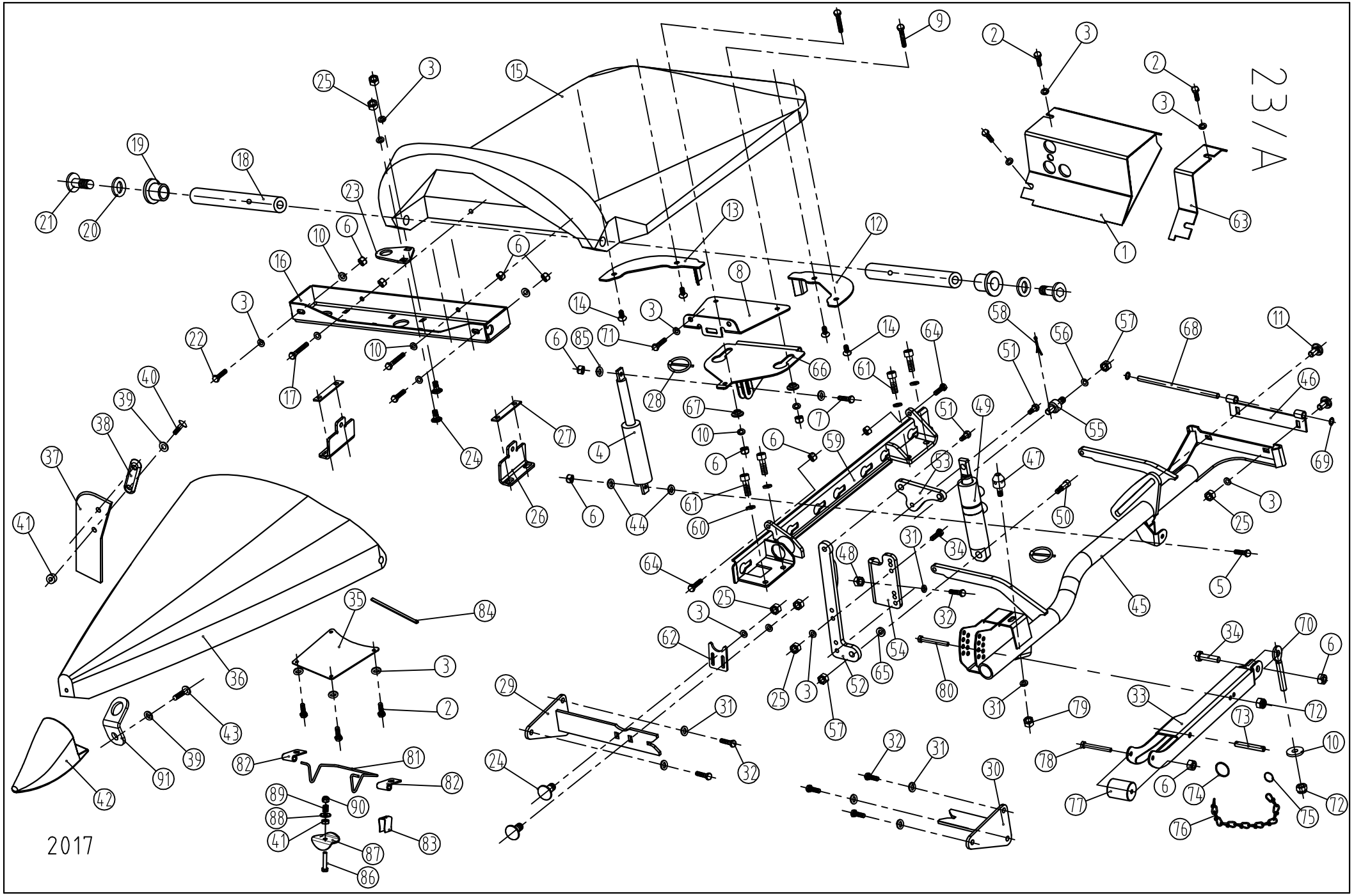
23/A
2017

PLASTIC HINGED DIVIDERS - folding models (30"/76,2cm 2010→), (28"/70cm 2015→), (32"/80 cm 2015→)

Ref.	Part Number	Description		4+2R	4+2x2R	6+2x3R
36.	*1.376.099.4	Central snout orange		2	2	2
36.	*1.376.099.5	Central snout Claas green		2	2	2
36.	*1.376.099.6	Central snout SDF green		2	2	2
36.	*1.376.099.7	Central snout AGCO red		2	2	2
36.	*1.376.099.8	Central snout Challenger yellow		2	2	2
36.	*1.376.099.9	Central snout GLEANER gray		2	2	2
36.	*1.376.099.10	Central snout chassis gray		2	2	2
36.	**1.376.097	Central snout white		2	2	2
36.	**1.376.097.1	Central snout CASE IH red		2	2	2
36.	**1.376.097.2	Central snout NH yellow		2	2	2
36.	**1.376.097.3	Central snout JD green		2	2	2
36.	**1.376.097.4	Central snout orange		2	2	2
36.	**1.376.097.5	Central snout Claas green		2	2	2
36.	**1.376.097.6	Central snout SDF green		2	2	2
36.	**1.376.097.7	Central snout AGCO red		2	2	2
36.	**1.376.097.8	Central snout Challenger yellow		2	2	2
36.	**1.376.097.9	Central snout GLEANER gray		2	2	2
36.	**1.376.097.10	Central snout chassis gray		2	2	2
37.	1.378.053	Rubber earsaver		4	4	4
38.	1.329.164	Shim		4	4	4
39.	72208000060	Spring washer M8 - DIN 128/A		10	10	10
40.	78200802063	Hex socket button-head torx bolt M8x20 - ISO7380/10.9		8	8	8
41.	1.329.747	Spacer		9	9	9
42.	1.354.310	Skid shoe		2	2	2
43.	79308009063	Hex bolt M8x90 - DIN931/10.9		2	2	2
44.	993.454.0	Bushing		4	4	4
45.	1.378.048	Hinged frame - LH		1	1	1
45.	*1.373.336	Hinged frame - LH		1	1	1
45.	**1.373.595	Hinged frame - LH		1	1	1
45.	1.378.049	Hinged frame - RH		1	1	1
45.	*1.373.337	Hinged frame - RH		1	1	1
45.	**1.373.596	Hinged frame - RH		1	1	1
46.	1.377.741	Hinge		2	2	2
47.	1.310.009	Support pin		2	2	2
48.	73510000066	Hex nut M10 - DIN934		2	2	2
49.	1.354.397	Hydraulic cylinder		2	2	2
50.	1.354.382	Bolt - M12		2	2	2
51.	1.354.381	Bolt - M10		4	4	4
52.	1.377.018	Console - LH		1	1	1
52.	1.377.013	Console - RH		1	1	1
53.	1.377.019	Arm		2	2	2
54.	1.377.020	Console - LH		1	1	1
54.	1.377.015	Console - RH		1	1	1
55.	1.329.744	Tapped shaft		2	2	2
56.	71412000060	Washer M12 - DIN125 - 200HV		2	2	2
57.	70712000066	Lock nut - DIN980 - M12		4	4	4
58.	72402502560	Split pin 2.5x25 - DIN94		2	2	2
59.	1.378.056	Chain guide - LH		1	1	1
59.	1.378.057	Chain guide - RH		1	1	1
60.	71810000060	Spring washer M10 - DIN7980		8	8	8
61.	80210003063	Hex socket head cap bolt M10x30 - DIN912/10.9		8	8	8
62.	1.377.022	Plate		2	2	2
63.	1.376.043	Cover plate - LH		1	1	1
63.	1.376.044	Cover plate - RH		1	1	1

Note: Item 60 and 61 are the same as item 6 and 4 pg. 11/A.
Parts, marked "*" are used only for 28"/70 cm row space,
Parts, marked "**" are used only for 80 cm row space

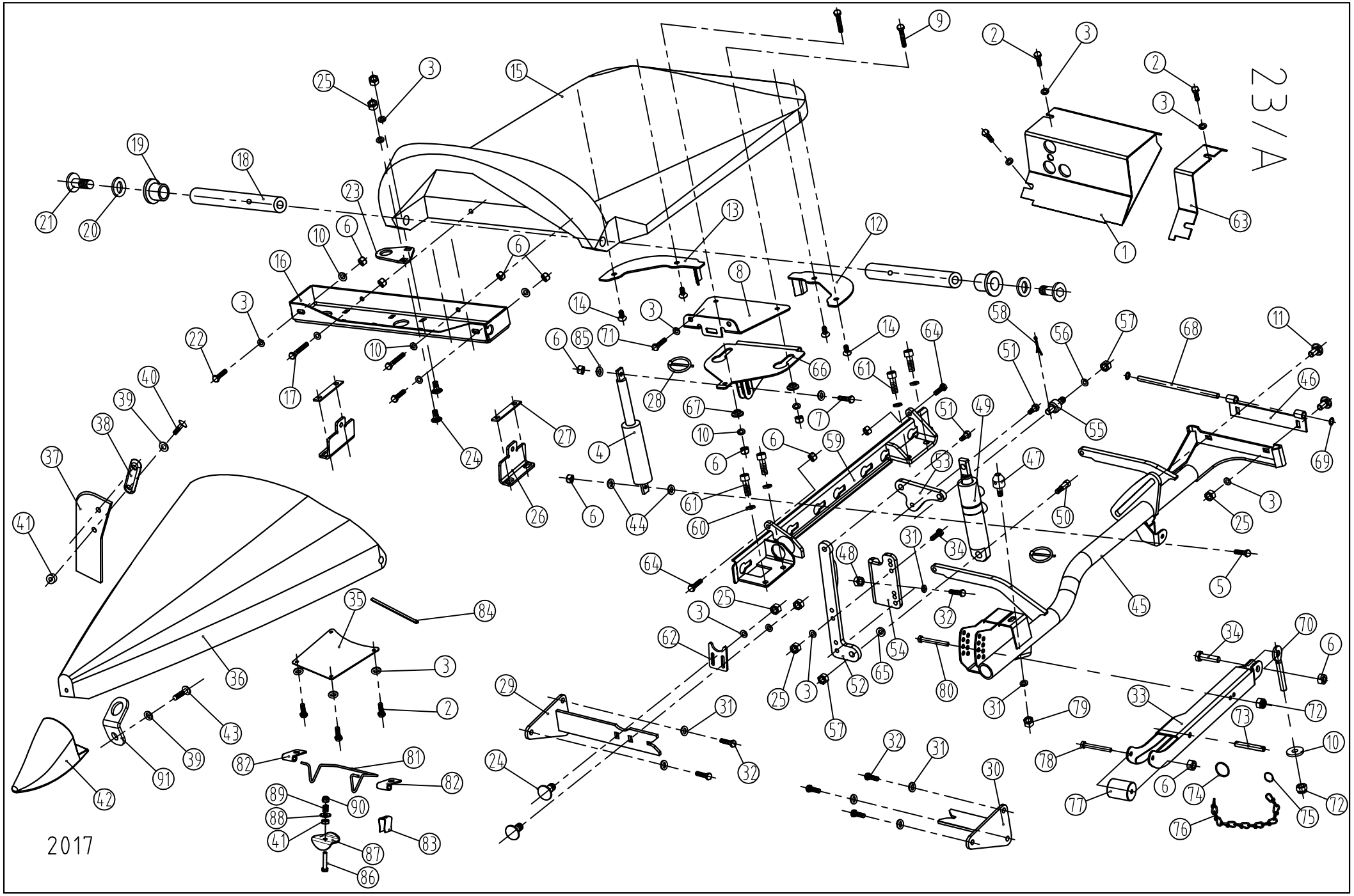
23/A
2017

PLASTIC HINGED DIVIDERS - folding models (30"/76,2cm 2010→), (28"/70cm 2015→), (32"/80 cm 2015→)

Ref.	Part Number	Description		4+2R	4+2x2R	6+2x3R
64.	79408003063	Hex bolt M8x30 - DIN933/10.9		4	4	4
65.	1.329.746	Spacer		2	2	2
66.	1.377.744	Hinge		2	2	2
66.	*1.373.339	Hinge - LH		1	1	1
66.	*1.373.341	Hinge - RH		1	1	1
67.	1.377.751	Washer		4	4	4
68.	1.377.747	Shaft		2	2	2
69.	70110000001	Toothed washer		4	4	4
70.	77208004560	Eye-bolt -M8x45 DIN44/LB		2	2	2
71.	79408001666	Hex bolt M8x16 - DIN933/8.8		4	4	4
72.	74908000066	Hex nut - plastic insert M8 - DIN985		4	4	4
73.	1.325.892	Pin		2	2	2
74.	1.325.440	Retainer ring		2	2	2
75.	67210000011	Ring		2	2	2
76.	1.379.913	Chain 2.2x31x10	→2011	2	2	2
76.	1.379.914	4x32x15,2 Band chain	2012→	-	2	4
77.	1.377.902	Roll		2	2	2
78.	79408006566	Hex bolt M8x65 - DIN933/8.8		2	2	2
79.	70710000066	Lock nut - M10 - DIN980		2	2	2
80.	79408006066	Hex bolt M8x60 - DIN933/8.8		2	2	2
81.	1.379.151	Spacing	2013→	1	1	1
82.	1.379.152	Plate	2013→	2	2	2
83.	1.328.006	Spring clamp	2013→2015	1	1	1
84.	96720070601	Rubber protector	2014→	2	2	2
85.	71408000060	Washer M8 - DIN125 - 200HV		4	4	4
86.	79406003066	Hex bolt M6x30 - DIN933/8.8	2016→	1	1	1
87.	1.373.749	Retainer	2016→	1	1	1
88.	96702361800	Washer	2016→	1	1	1
89.	1.327.689	Spring	2016→	1	1	1
90.	74906000066	Hex nut - plastic insert M6 - DIN985	2016→	1	1	1
91.	1.372.352	Loop	2017→	2	2	2

Note: Item 60 and 61 are the same as item 6 and 4 pg. 11/A.
Parts, marked "*" are used only for 28"/70 cm row space,
Parts, marked "**" are used only for 80 cm row space

23/B

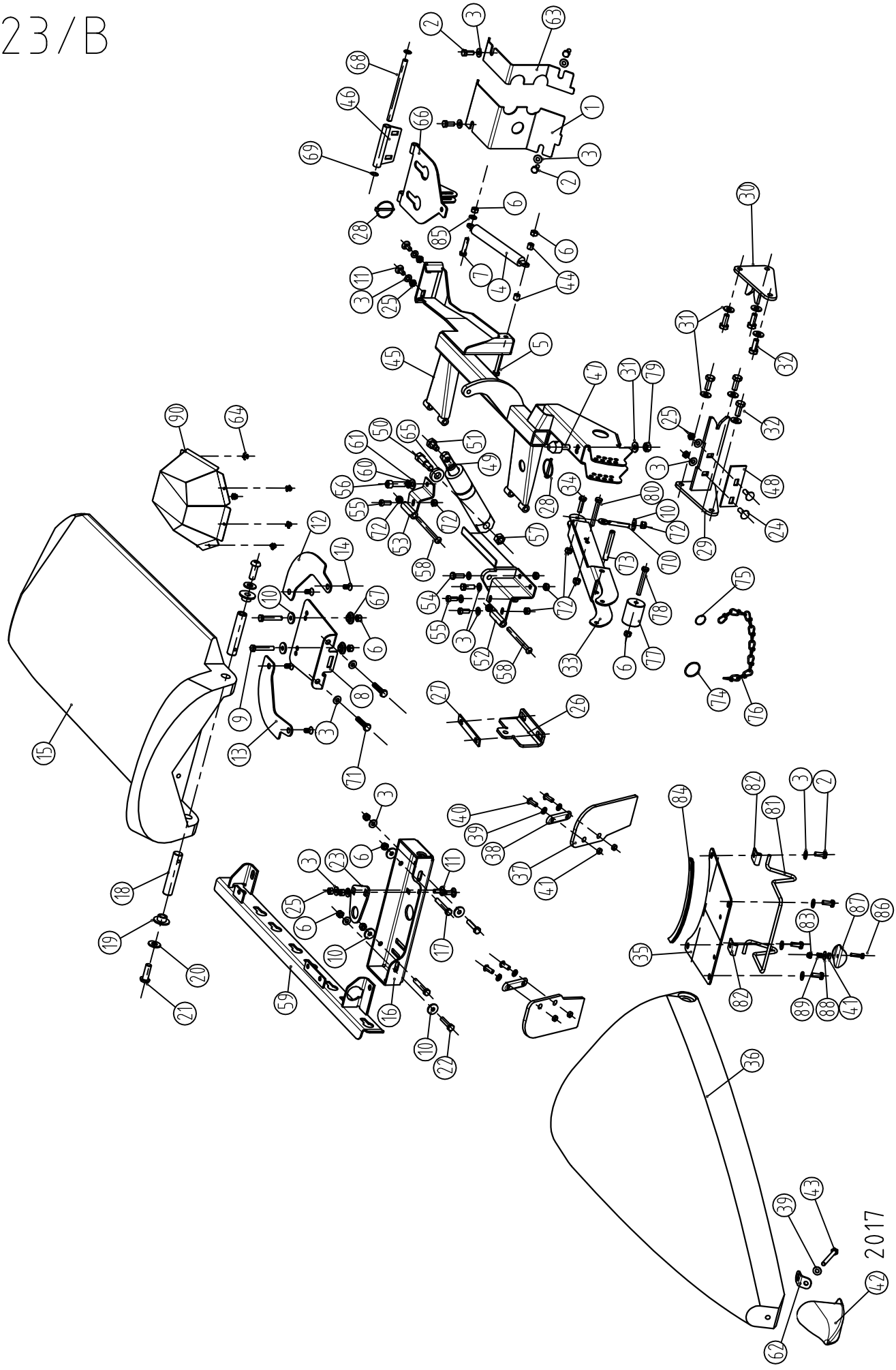

© 2017

PLASTIC HINGED DIVIDERS - folding models - 60 CM

Ref.	Part Number	Description		5+2R	5+2x2R
1.	1.373.950	Bracket - LH		1	1
1.	1.373.951	Bracket - RH		1	1
2.	79408002066	Hex bolt M8x20 - DIN933/8.8		16	16
3.	91623938761	Spring washer - A8		30	30
4.	1.376.793	Gas spring 1000N		2	2
5.	79408004566	Hex bolt M8x45 - DIN933/8.8		2	2
6.	70708000066	Lock nut - DIN980 - M8		20	20
7.	79408003566	Hex bolt M8x35 - DIN933/8.8		2	2
8.	1.378.575	Bracket		2	2
9.	79308005066	Hex bolt M8x50 - DIN931/8.8		4	4
10.	1.314.099	Washer		14	14
11.	76308002066	Carriage bolt M8x20 - DIN603/8.8		8	8
12.	1.372.018	Cleaning plate - LH		2	2
13.	1.372.019	Cleaning plate - RH		2	2
14.	80408001266	Hex socket countersunk-head bolt M8x12 - DIN7991/8.8		8	8
15.	1.372.082	Rear divider LH - white		1	1
15.	1.372.082.1	Rear divider LH - CASE IH red		1	1
15.	1.372.082.2	Rear divider LH - NH yellow		1	1
15.	1.372.082.3	Rear divider LH - JD green		1	1
15.	1.372.082.4	Rear divider LH - orange		1	1
15.	1.372.082.5	Rear divider LH - Claas green		1	1
15.	1.372.082.6	Rear divider LH - SDF green		1	1
15.	1.372.082.7	Outer divider - LH AGCO red		1	1
15.	1.372.082.8	Outer divider - LH Challenger yellow		1	1
15.	1.372.082.9	Outer divider - LH GLEANER gray		1	1
15.	1.372.082.10	Outer divider - LH chassis gray		1	1
15.	1.372.083	Rear divider RH - white		1	1
15.	1.372.083.1	Rear divider RH - CASE IH red		1	1
15.	1.372.083.2	Rear divider RH - NH yellow		1	1
15.	1.372.083.3	Rear divider RH - JD green		1	1
15.	1.372.083.4	Rear divider RH - orange		1	1
15.	1.372.083.5	Rear divider RH - Claas green		1	1
15.	1.372.083.6	Rear divider RH - SDF green		1	1
15.	1.372.083.7	Outer divider - RH AGCO red		1	1
15.	1.372.083.8	Outer divider - RH Challenger yellow		1	1
15.	1.372.083.9	Outer divider - RH GLEANER gray		1	1
15.	1.372.083.10	Outer divider - RH chassis gray		1	1
16.	1.373.481	Support assy		2	2
17.	79308005566	Hex bolt M8x55 - DIN931/8.8		4	4
18.	1.353.461	Shaft		4	4
19.	1.353.462	Spacer		4	4
20.	91623938961	Spring washer - A12		4	4
21.	78212003563	Hex socket button-head torx bolt M12x35 - ISO 7380/10.9		4	4
22.	79308004066	Hex bolt M8x40 - DIN931/8.8		4	4
23.	1.354.571	Plate		2	2
24.	76308002566	Carriage bolt M8x25 - DIN603/8.8		4	4
25.	73508000066	Hex nut M8 - DIN934		10	10
26.	1.377.862	Support		4	4
27.	1.376.747	Flat		4	4
28.	967PSF30526	Lynch pin DIN11023		4	4
29.	1.372.148	Support - LH		1	1
29.	1.372.149	Support - RH		1	1
30.	1.372.151	Support - LH		1	1
30.	1.372.152	Support - RH		1	1
31.	91623938861	Spring washer - A10		14	14

Note: Item 60 and 61 are the same as item 6 and 38 pg. 11/A.

23/B

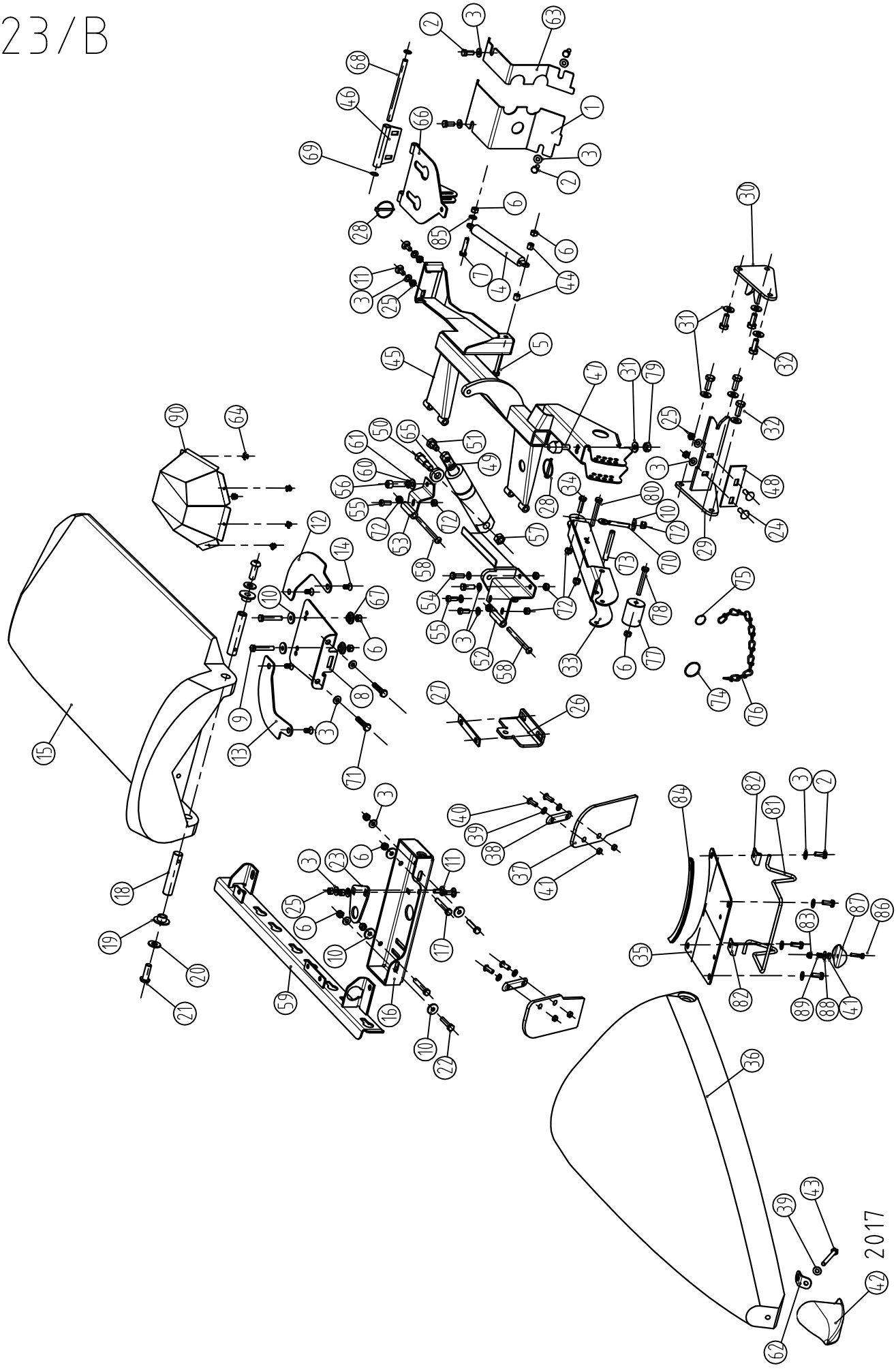

© 2017

PLASTIC HINGED DIVIDERS - folding models - 60 CM

Ref.	Part Number	Description		5+2R	5+2x2R
32.	79410002566	Hex bolt M10x25 - DIN933/8.8		12	12
33.	1.377.975	Arm assy LH - to the RH of header	→2019.	1	1
33.	1.377.976	Arm assy RH - to the LH of header	→2019.	1	1
33.	1.372.861	Arm assy LH - to the RH of header	2020.→	1	1
33.	1.372.862	Arm assy RH - to the LH of header	2020.→	1	1
34.	79408003066	Hex bolt M8x30 - DIN933/8.8		2	2
35.	1.354.667	Plate		2	2
36.	1.373.508	Central snout white		2	2
36.	1.373.508.1	Central snout CASE IH red		2	2
36.	1.373.508.2	Central snout NH yellow		2	2
36.	1.373.508.3	Central snout JD green		2	2
36.	1.373.508.4	Central snout orange		2	2
36.	1.373.508.5	Central snout Claas green		2	2
36.	1.373.508.6	Central snout SDF green		2	2
36.	1.373.508.7	Central snout AGCO red		2	2
36.	1.373.508.8	Central snout Challenger yellow		2	2
36.	1.373.508.9	Central snout GLEANER gray		2	2
36.	1.373.508.10	Central snout chassis gray		2	2
37.	1.379.499	Rubber earsaver		4	4
38.	1.329.164	Shim		4	4
39.	72208000060	Spring washer M8 - DIN 128/A		9	9
40.	78200802063	Hex socket button-head torx bolt M8x20 - ISO7380/10.9		8	8
41.	1.329.747	Spacer		10	10
42.	1.354.310	Skid shoe		2	2
43.	79308009063	Hex bolt M8x90 - DIN931/10.9		2	2
44.	993.454.0	Bushing		4	4
45.	1.372.092	Hinged frame - LH		1	1
45.	1.372.093	Hinged frame - RH		1	1
46.	1.372.022	Hinge		2	2
47.	1.310.009	Support pin		2	2
48.	1.372.154	Support		2	2
49.	1.354.397	Hydraulic cylinder		2	2
50.	1.354.382	Bolt - M12		2	2
51.	1.354.381	Bolt - M10		2	2
52.	1.372.142	Pivot holder front - LH		1	1
52.	1.372.143	Pivot holder front - RH		1	1
53.	1.372.136	Pivot holder rear - LH		1	1
53.	1.372.137	Pivot holder rear - RH		1	1
54.	79408002566	Hex bolt M8x25 - DIN933/8.8		4	4
55.	80308002062	Hex socket head cap bolt M8x20 - DIN6912/12.9		4	4
56.	80210003563	Hex socket head cap bolt M10x35 - DIN912/10.9		2	2
57.	70712000066	Lock nut - DIN980 - M12		2	2
58.	81108010063	Hex socket button-head bolt- M8x100 - ISO7380/10.9		4	4
59.	1.372.164	Chain guide - LH		1	1
59.	1.372.165	Chain guide - RH		1	1
60.	71810000060	Spring washer M10 - DIN7980		2	2
61.	71410000060	Washer M10 - DIN125 - 200HV		2	2
91.	1.372.352	Loop		2	2
63.	1.373.665	Cover plate - LH		1	1
63.	1.373.666	Cover plate - RH		1	1
64.	84348001401	POP rivet 4,8x14		10	10
65.	1.329.746	Spacer		2	2
66.	1.372.020	Hinge		2	2
67.	1.377.751	Washer		4	4
68.	1.378.578	Shaft		2	2

Note: Item 60 and 61 are the same as item 6 and 38 pg. 11/A.

23/B

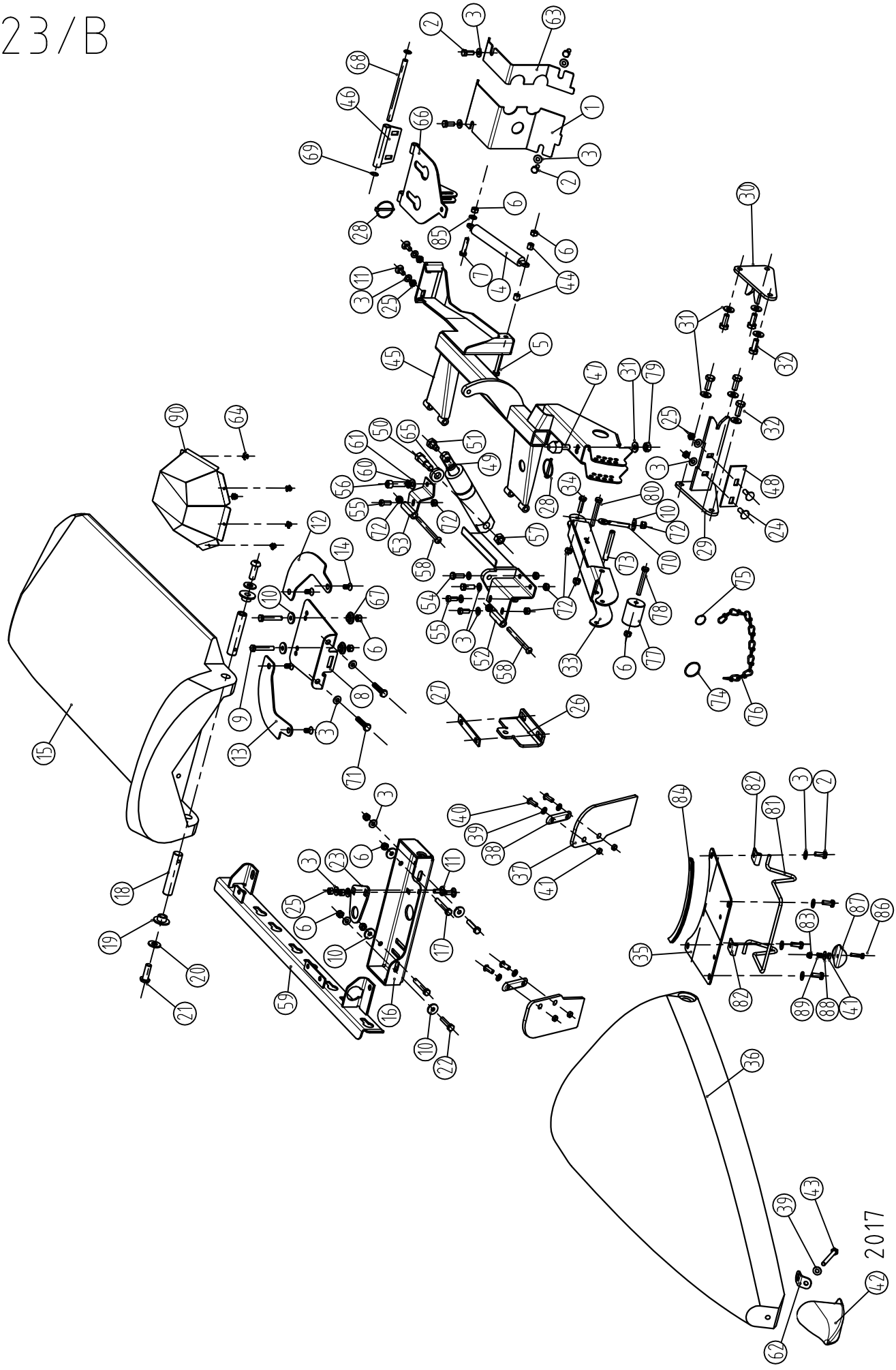

© 2017

PLASTIC HINGED DIVIDERS - folding models - 60 CM

Ref.	Part Number	Description		5+2R	5+2x2R
69.	70110000001	Toothed washer		4	4
70.	77208004560	Eye-bolt -M8x45 DIN44/LB		2	2
71.	79408001666	Hex bolt M8x16 - DIN933/8.8		4	4
72.	74908000066	Hex nut - plastic insert M8 - DIN985		4	4
73.	1.325.892	Pin		2	2
74.	1.325.440	Retainer ring		2	2
75.	67210000011	Ring		2	2
76.	1.379.914	4x32x15,2 Band chain		2	2
77.	1.377.902	Roll		2	2
78.	79408006566	Hex bolt M8x65 - DIN933/8.8		2	2
79.	70710000066	Lock nut - M10 - DIN980		2	2
80.	79408006066	Hex bolt M8x60 - DIN933/8.8		2	2
81.	1.379.151	Spacing		2	2
82.	1.379.152	Plate		4	4
83.	74906000066	Hex nut - plastic insert M6 - DIN985		2	2
84.	96720070601	Rubber protector		2	2
85.	71408000060	Washer M8 - DIN125 - 200HV		4	4
86.	79406003066	Hex bolt M6x30 - DIN933/8.8		2	2
87.	1.373.749	Retainer		2	2
88.	96702361800	Washer		2	2
89.	1.327.689	Spring		2	2
90.	1.372.084	Cover		2	2

Note: Item 60 and 61 are the same as item 6 and 38 pg. 11/A.

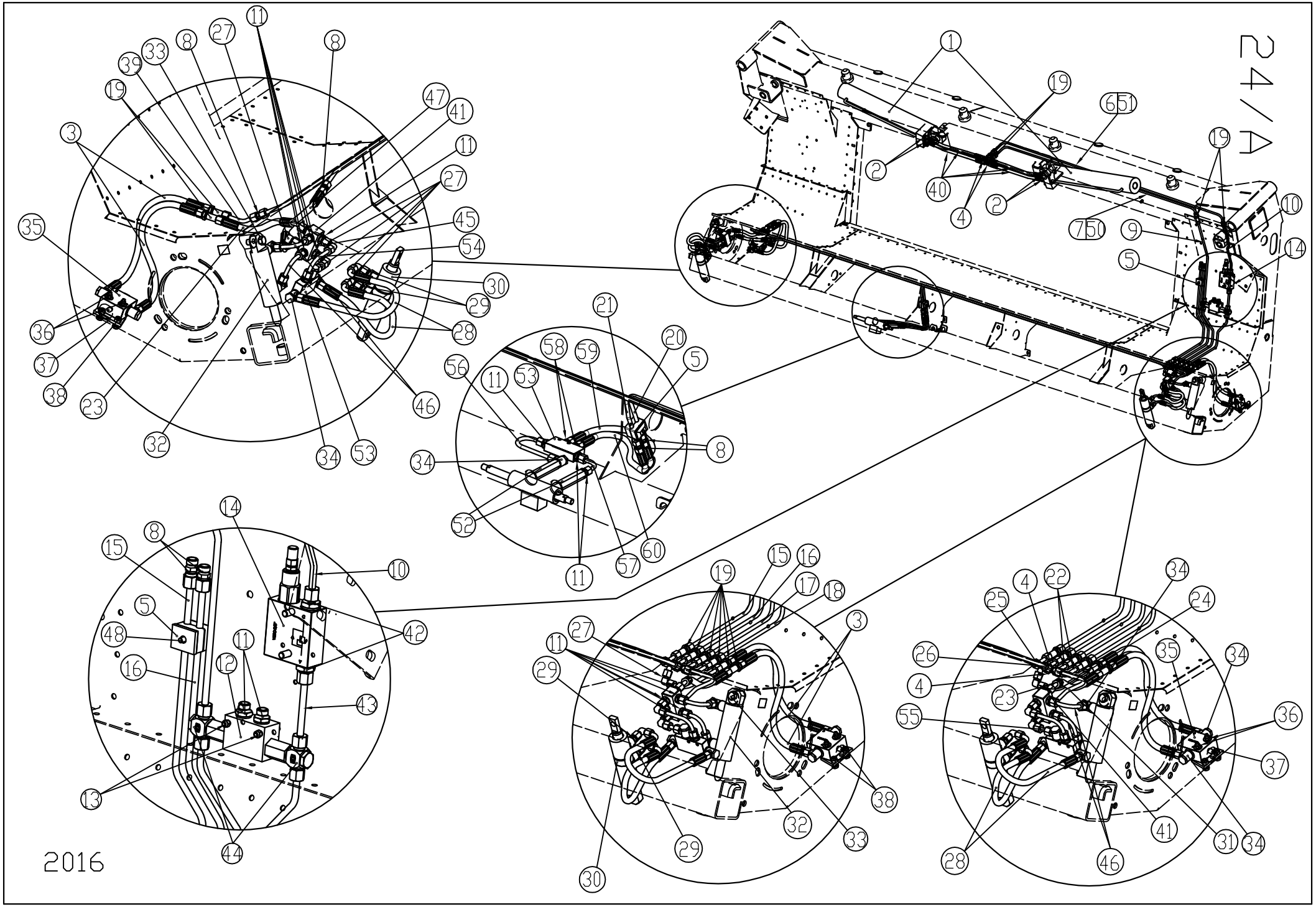
24/A
2016

24/A

HYDRAULIC FOLDING → 2015

Ref.	Part Number	Description		4+2 R 76.2cm	4+2x2 R 76.2cm	5+2x2 R 76.2cm	6+2x3 R 76.2cm
1.	1.376.278	Hydraulic cylinder		2	-	-	-
1.	1.375.144	Hydraulic cylinder		-	2	2	-
1.	1.378.415	Hydraulic cylinder		-	-	-	2
2.	1.310.514	Fitting (1 mm hole)		4	4	4	4
2.*	1.355.481	Fitting (0,7 mm hole)		4	4	4	4
3.	1.376.796	Hydraulic hose 1SNDN6-400		4	4	4	-
3.	1.352.896	Hydraulic hose 1SNDN6-450		-	-	-	4
4.	1.354.511	T-form - T8PL	→2011	4	4	4	4
4.	1.354.511	T-form - T8PL	2012→	2	2	2	2
5.	1.377.061	Clamp		2	2	2	2
6.	1.378.373	Hydraulic tube		1	1	-	-
6.	1.378.379	Hydraulic tube L=74		-	-	1	1
6.	1.378.376	Hydraulic tube L=1840		-	-	-	1
6.	1.378.380	Hydraulic tube L=1078		-	-	1	-
7.	1.378.372	Hydraulic tube		1	1	-	-
7.	1.378.379	Hydraulic tube L=74		-	-	1	1
7.	1.378.376	Hydraulic tube L=1840		-	-	-	1
7.	1.378.380	Hydraulic tube L=1078		-	-	1	-
8.	1.377.062	Fitting - M14X1.5		6	6	6	6
9.	1.378.374	Hydraulic tube	→2011	1	1	1	1
9.	1.378.845	Hydraulic tube	2012→	1	1	1	1
10.	1.378.618	Hydraulic tube	→2011	1	1	1	1
10.	1.378.846	Hydraulic tube	2012→	1	1	1	1
11.	1.375.669	Fitting - GE8PLR-ED	→2015	16	16	16	16
11.	1.375.669	Fitting - GE8PLR-ED	2016→	19	19	19	19
12.	1.314.508	Dual controlled check valve KEV - 6	→2011	1	1	1	1
12.	1.378.837	Dual controlled check valve FDP 1/4	2012→	1	1	1	1
13.	79406004066	Hex bolt M6x40		2	2	2	2
	74906000066	Hex nut - plastic insert M6 - DIN985		2	2	2	2
14.	96703800001	Pressure limit valve C. VS2 3/8"		1	1	1	1
15.	1.377.065	Hydraulic tube		1	1	1	-
15.	1.378.638	Hydraulic tube		-	-	-	1
16.	1.377.066	Hydraulic tube		1	1	1	-
16.	1.378.637	Hydraulic tube		-	-	-	1
17.	1.377.063	Hydraulic tube	→2011	1	1	1	-
17.	1.378.842	Hydraulic tube	2012→	1	1	1	-
17.	1.378.632	Hydraulic tube	→2011	-	-	-	1
17.	1.378.854	Hydraulic tube	2012→	-	-	-	1
18.	1.377.064	Hydraulic tube	→2011	1	1	1	-
18.	1.377.843	Hydraulic tube	2012→	1	1	1	-
18.	1.378.632	Hydraulic tube	→2011	-	-	-	1
18.	1.378.857	Hydraulic tube	2012→	-	-	-	1
19.	1.308.783	Fitting - bulkhead HYP 160-8-575 SV8		12	12	12	12
20.	1.377.072	Hydraulic tube L=1501,5		1	1	1	1
21.	1.377.073	Hydraulic tube L=1531,5		1	1	1	1
22.	1.377.074	Hydraulic tube		2	2	2	2
23.	1.378.619	Hydraulic hose 1SNDN6-262		2	2	2	-
23.	1.378.639	Hydraulic hose 1SNDN6-320		-	-	-	2
24.	1.378.614	Hydraulic tube		1	1	-	-
24.	1.378.647	Hydraulic tube		-	-	1	-
24.	1.378.648	Hydraulic tube		-	-	-	1
25.	1.378.615	Hydraulic tube		1	1	-	-
25.	1.378.643	Hydraulic tube		-	-	1	-
25.	1.378.644	Hydraulic tube		-	-	-	1
26.	1.378.616	Hydraulic tube		1	1	-	-
26.	1.378.641	Hydraulic tube		-	-	1	-
26.	1.378.642	Hydraulic tube		-	-	-	1

Note: * Loose parts

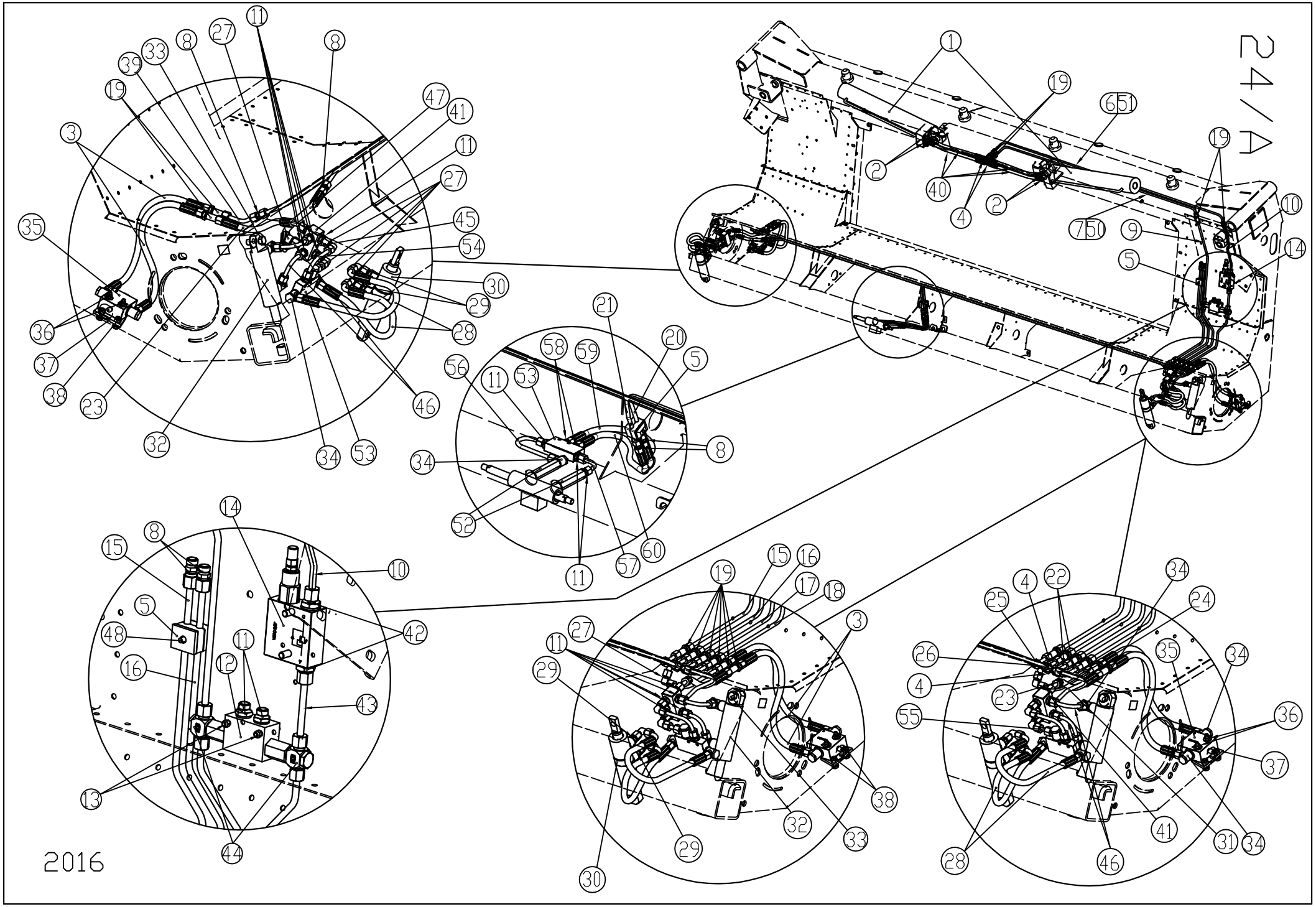
24/A
2016

24/A

HYDRAULIC FOLDING → 2015

Ref.	Part Number	Description		4+2 R 76.2cm	4+2x2 R 76.2cm	5+2x2 R 76.2cm	6+2x3 R 76.2cm
27.	1.314.510	Fitting - 90deg. EVW 8 PL		10	10	10	10
28.	1.377.089	Hydraulic hose 1SNDN6-355	→2013	4	4	4	4
28.	1.379.477	Hydraulic hose 1SNDN6-410	2014→	4	4	4	4
29.	1.309.601	Fitting - GE-8-PSM-ED		4	4	4	4
29.*	1.310.514	Fitting		4	4	4	4
30.	1.354.397	Hydraulic cylinder		2	2	2	2
31.	1.378.613	Hydraulic tube		1	1	-	-
31.	1.378.645	Hydraulic tube		-	-	1	-
31.	1.378.646	Hydraulic tube		-	-	-	1
32.	1.356.118	Hydraulic cylinder		2	2	2	2
33.	1.377.593	Bolt		2	2	2	2
34.	1.314.509	Fitting - SVWE8PL	→2015	14	14	14	14
34.	1.314.509	Fitting - SVWE8PL	2016→	15	15	15	15
35.	1.378.526	Endswitch VFCA -1401		2	2	2	2
36.	79406005066	Hex bolt M6x50		4	4	4	4
	96702361800	Washer		4	4	4	4
	74900600066	Hex nut - plastic insert M6		4	4	4	4
37.	1.378.530	Plate		2	2	2	2
38.	79408002066	Hex bolt M8x20		4	4	4	4
	74900800066	Hex nut - plastic insert M8		4	4	4	4
39.	1.377.076	Hydraulic tube		1	1	1	1
40.	1.330.772	Hydraulic hose 1SNDN6-375		4	4	4	4
41.	1.378.522	Divider		2	2	2	2
42.	1.353.318	Fitting - M14X1.5 /G3/8		2	2	2	2
43.	1.378.617	Hydraulic tube	→2011	1	1	-	-
43.	1.378.844	Hydraulic tube	2012→	1	1	-	-
44.	1.378.836	T-form - TH-8-PLR	2012→	2	2	2	2
45.	80208001666	Hex socket head cap bolt M8x16 DIN912/8.8		2	2	2	2
	71808000060	Spring washer M8 DIN7980		2	2	2	2
46.	1.378.612	Hydraulic tube		4	4	4	4
47.	1.330.757	Hydraulic hose 1SNDN6-200		1	1	1	1
48.	79406004566	Hex bolt M6x45		2	2	2	2
49.	1.376.795	Hydraulic hose 1SNDN6-290		1	1	1	1
50.	1.378.381	Hydraulic tube L=655		-	-	1	-
50.	1.378.377	Hydraulic tube L=294		-	-	-	1
51.	1.378.382	Hydraulic tube L=832		-	-	1	-
51.	1.378.378	Hydraulic tube L=471		-	-	-	1
52.	1.378.696	Fitting - GE8PLR-ED	2012→	2	2	2	2
53.	1.379.458	Dual controlled check valve FPDLE 1/4 GS	→2015	2	2	2	2
53.	1.379.458	Dual controlled check valve FPDLE 1/4 GS	2016→	3	3	3	3
54.	1.379.457	Hydraulic tube		2	2	2	2
55.	1.379.456	Hydraulic tube L=45		2	2	2	2
56.	1.373.449	Hydraulic tube	2016→	1	1	1	1
57.	1.373.991	Hydraulic tube	2016→	1	1	1	1
58.	1.379.776	Orifice DIA 0,5		2	2	2	2
59.	1.373.488	Hydraulic hose 1SNDN6-535	2016→	1	1	1	1
60.	1.373.585	Hydraulic hose 1SNDN6-470	2016→	1	1	1	1

Note: * Loose parts

24/A1

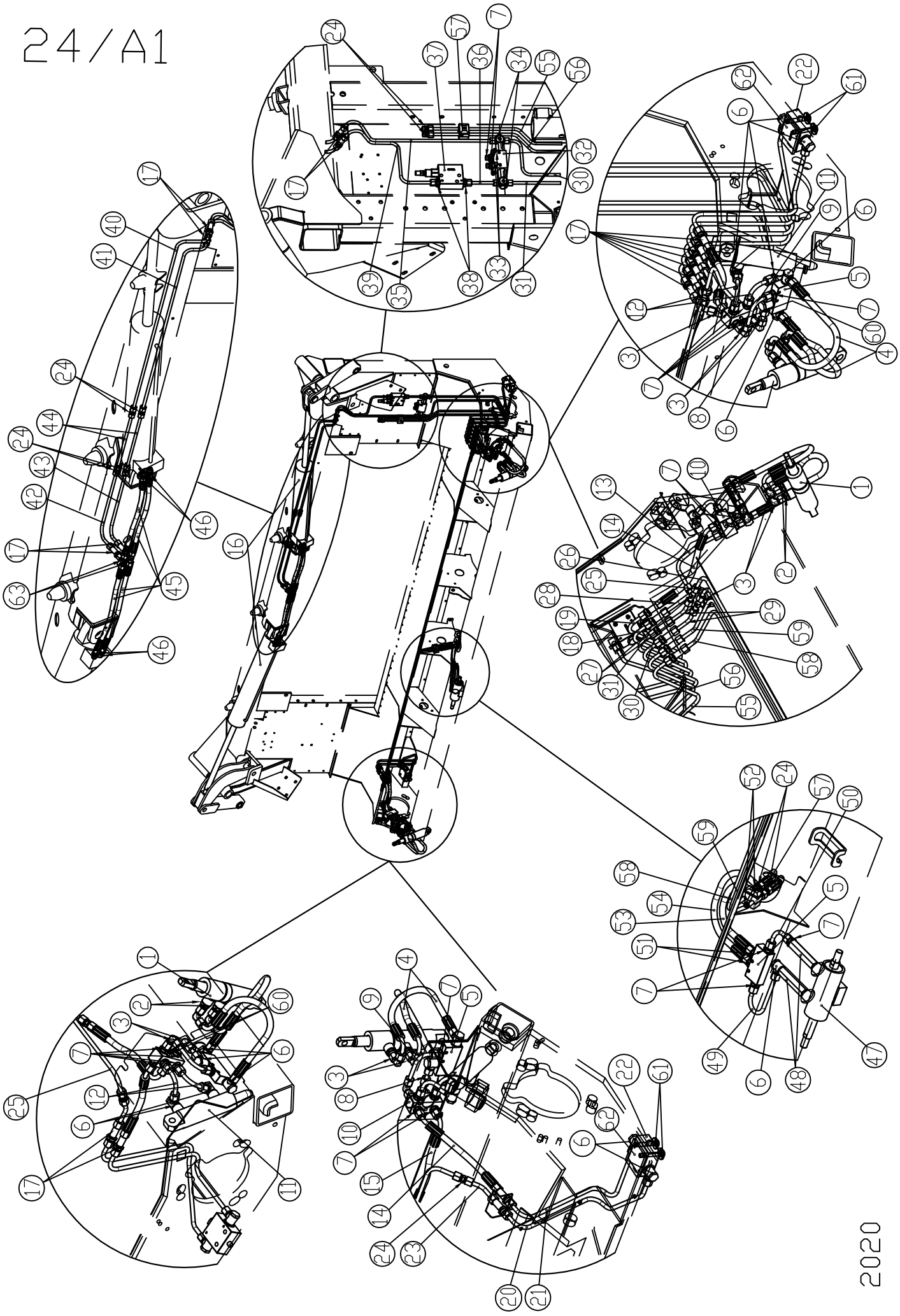

2020

24/A1

HYDRAULIC FOLDING 2016 →

Ref.	Part Number	Description		4+2 R 76.2cm	4+2x2 R 76.2cm
1.	1.354.397	Hydraulic cylinder		2	2
2.	1.309.601	Fitting - GE-8-PSM-ED		4	4
2.*	1.310.514	Fitting - 1 mm hole		4	4
3.	1.314.510	Fitting - 90deg. EVW 8 PL		10	10
4.	1.379.477	Hydraulic hose - 1SNDN6-410		4	4
5.	1.379.458	Dual controlled check valve - FPDLE 1/4 GS		3	3
6.	1.314.509	Fitting - SVWE 8 PL		15	15
7.	1.375.669	Fitting - GE8PLR-ED		21	21
8.	1.379.456	Hydraulic tube - (L=45)		2	2
9.	1.379.457	Hydraulic tube		2	2
10.	1.378.522	Divider		2	2
11.	1.356.118	Hydraulic cylinder		2	2
12.	1.378.612	Hydraulic tube		4	4
13.	1.378.613	Hydraulic tube		1	1
14.	1.378.619	Hydraulic hose - 1SNDN6-262		2	2
15.	1.330.757	Hydraulic hose - 1SNDN6-200		1	1
16.	1.376.278	Hydraulic cylinder		2	-
16.	1.375.144	Hydraulic cylinder		-	2
17.	1.308.783	Fitting - bulkhead - HYP 160-8-575 SV8		12	12
18.	1.373.577	Hydraulic tube		1	1
19.	1.373.313	Hydraulic tube		1	1
20.	1.373.315	Hydraulic tube		1	1
21.	1.373.314	Hydraulic tube		1	1
22.	1.378.526	Endswitch - VFCA - 1401		2	2
23.	1.377.076	Hydraulic tube		1	1
24.	1.377.062	Fitting - M14X1.5		9	9
25.	1.375.615	Hydraulic tube		1	1
26.	1.378.616	Hydraulic tube		1	1
27.	1.354.511	T-form - T8PL		2	2
28.	1.378.614	Hydraulic tube		1	1
29.	1.377.074	Hydraulic tube		2	2
30.	1.373.775	Hydraulic tube		1	1
31.	1.373.774	Hydraulic tube		1	1
32.	1.378.837	Dual controlled check valve - FDP 1/4		1	1
33.	79406004066	Hex bolt - M6X40		2	2
	74906000066	Hex nut - plastic insert - M6 - DIN982		2	2
34.	1.378.836	T-form - TH-8-PLR		2	2
35.	1.373.583	Hydraulic tube		1	1
36.	1.378.844	Hydraulic tube		1	1
37.	96703800001	Pressure limit valve - C. VS2 3/8"		1	1
38.	1.353.318	Fitting - M14X1.5 G3/8		2	2
39.	1.373.584	Hydraulic tube		1	1
40.	1.373.328	Hydraulic tube		1	1
41.	1.373.330	Hydraulic tube		1	1
42.	1.373.329	Hydraulic tube		1	1
43.	1.373.331	Hydraulic tube		1	1
44.	1.372.268	Hydraulic tube		2	2
45.	1.330.772	Hydraulic hose - 1SNDN6-375		4	4
46.	1.310.514	Fitting - 1 mm hole		4	4
46.*	1.355.481	Fitting - 0,7 mm hole		4	4

Note: * Loose parts

24/A1

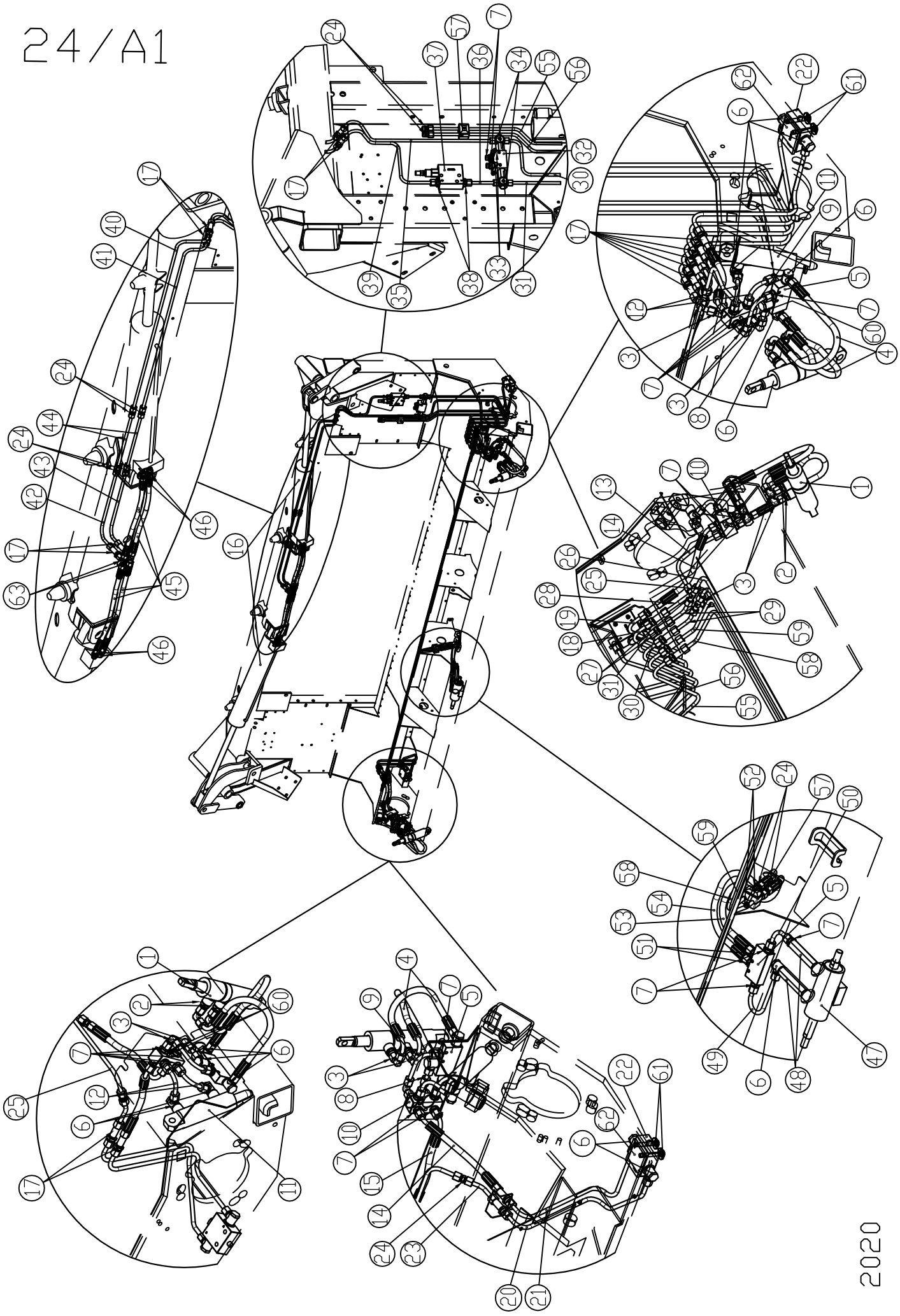

2020

24/A1

HYDRAULIC FOLDING 2016 →

Ref.	Part Number	Description		4+2 R 76.2cm	4+2x2 R 76.2cm
47.	1.373.725	Hydraulic cylinder		1	1
48.	1.378.696	Fitting - GE8PLR-ED		2	2
49.	1.373.449	Hydraulic tube		1	1
50.	1.373.991	Hydraulic tube		1	1
51.	1.379.776	Orifice DIA 0,5		2	2
52.	79406005066	Hex bolt - M6X50 - DIN933		2	2
	74906000066	Hex nut - plastic insert - M6 - DIN982		2	2
53.	1.373.585	Hydraulic hose - 1SNDN6-470		1	1
54.	1.373.488	Hydraulic hose - 1SNDN6-535		1	1
55.	1.373.777	Hydraulic tube		1	1
56.	1.373.776	Hydraulic tube		1	1
57.	1.377.061	Clamp		2	2
58.	1.377.072	Hydraulic tube - (L=1501,5)		1	1
59.	1.377.073	Hydraulic tube - (L=1531,5)		1	1
60.	80208001666	Hex socket head cap bolt - M8X16 - DIN912/8.8		2	2
	71808000060	Spring washer - M8 - DIN7980		2	2
61.	79408005066	Hex bolt - M8X50 - DIN933/8.8		4	4
	96702378160	Washer - M8 - DIN9021		4	4
62.	1.373.327	Washer		2	2
63.	1.314.511	T-form - EVT 8 PL		2	2

Note: * Loose parts

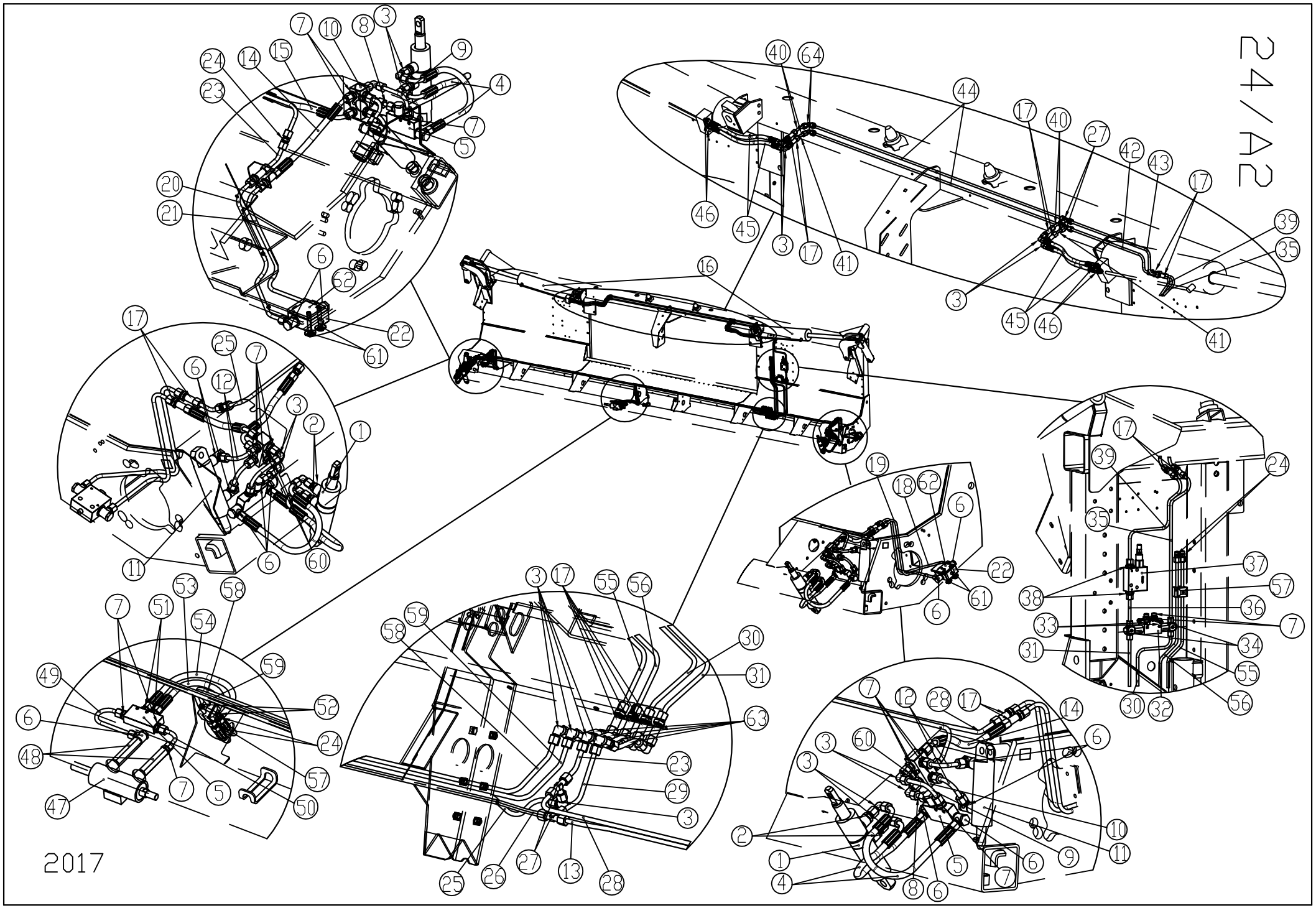
24/42
2017

24/A2

HYDRAULIC FOLDING 2016 →

Ref.	Part Number	Description		6+2x3 R 70cm	6+2x3 R 76.2cm
1.	1.354.397	Hydraulic cylinder		2	2
2.	1.309.601	Fitting - GE-8-PSM-ED		4	4
2.*	1.310.514	Fitting - 1 mm hole		4	4
3.	1.314.510	Fitting - 90deg. EVW 8 PL		18	18
4.	1.379.477	Hydraulic hose - 1SNDN6-410		4	4
5.	1.379.458	Dual controlled check valve - FPDLE 1/4 GS		3	3
6.	1.314.509	Fitting - SVWE 8 PL		15	15
7.	1.375.669	Fitting - GE8PLR-ED		21	21
8.	1.379.456	Hydraulic tube - (L=45)		2	2
9.	1.379.457	Hydraulic tube		2	2
10.	1.378.522	Divider		2	2
11.	1.356.118	Hydraulic cylinder		2	2
12.	1.378.612	Hydraulic tube		4	4
13.	1.373.901	Hydraulic tube		1	1
14.	1.378.639	Hydraulic hose - 1SNDN6-320		2	2
15.	1.330.757	Hydraulic hose - 1SNDN6-200		1	1
16.	1.378.415	Hydraulic cylinder		2	2
17.	1.308.783	Fitting - bulkhead - HYP 160-8-575 SV8		16	16
18.	1.373.577	Hydraulic tube		1	1
19.	1.373.313	Hydraulic tube		1	1
20.	1.373.315	Hydraulic tube		1	1
21.	1.373.314	Hydraulic tube		1	1
22.	1.378.526	Endswitch - VFCA - 1401		2	2
23.	1.377.076	Hydraulic tube		2	1
24.	1.377.062	Fitting - M14X1.5		8	8
25.	1.373.917	Hydraulic tube		-	1
25.	1.373.903	Hydraulic tube		1	-
26.	1.373.900	Hydraulic tube		1	1
27.	1.354.511	T-form - T8PL		2	2
28.	1.373.902	Hydraulic tube		1	1
29.	1.373.899	Hydraulic tube		1	1
30.	1.373.908	Hydraulic tube		1	1
31.	1.373.907	Hydraulic tube		1	1
32.	1.378.837	Dual controlled check valve - FDP 1/4		1	1
33.	79406004066	Hex bolt - M6X40		2	2
	74906000066	Hex nut - plastic insert - M6 - DIN982		2	2
34.	1.378.836	T-form - TH-8-PLR		2	2
35.	1.373.583	Hydraulic tube		1	1
36.	1.378.844	Hydraulic tube		1	1
37.	96703800001	Pressure limit valve - C. VS2 3/8"		1	1
38.	1.353.318	Fitting - M14X1.5 G3/8		2	2
39.	1.373.584	Hydraulic tube		1	1
40.	1.373.970	Hydraulic tube		4	2
41.	1.373.971	Hydraulic tube		-	2
42.	1.373.974	Hydraulic tube		1	1
43.	1.373.973	Hydraulic tube		1	1
44.	1.373.975	Hydraulic tube		2	2
45.	1.330.772	Hydraulic hose - 1SNDN6-375		4	4
46.	1.310.514	Fitting - 1 mm hole		4	4
46.*	1.355.481	Fitting - 0,7 mm hole		4	4

Note: * Loose parts

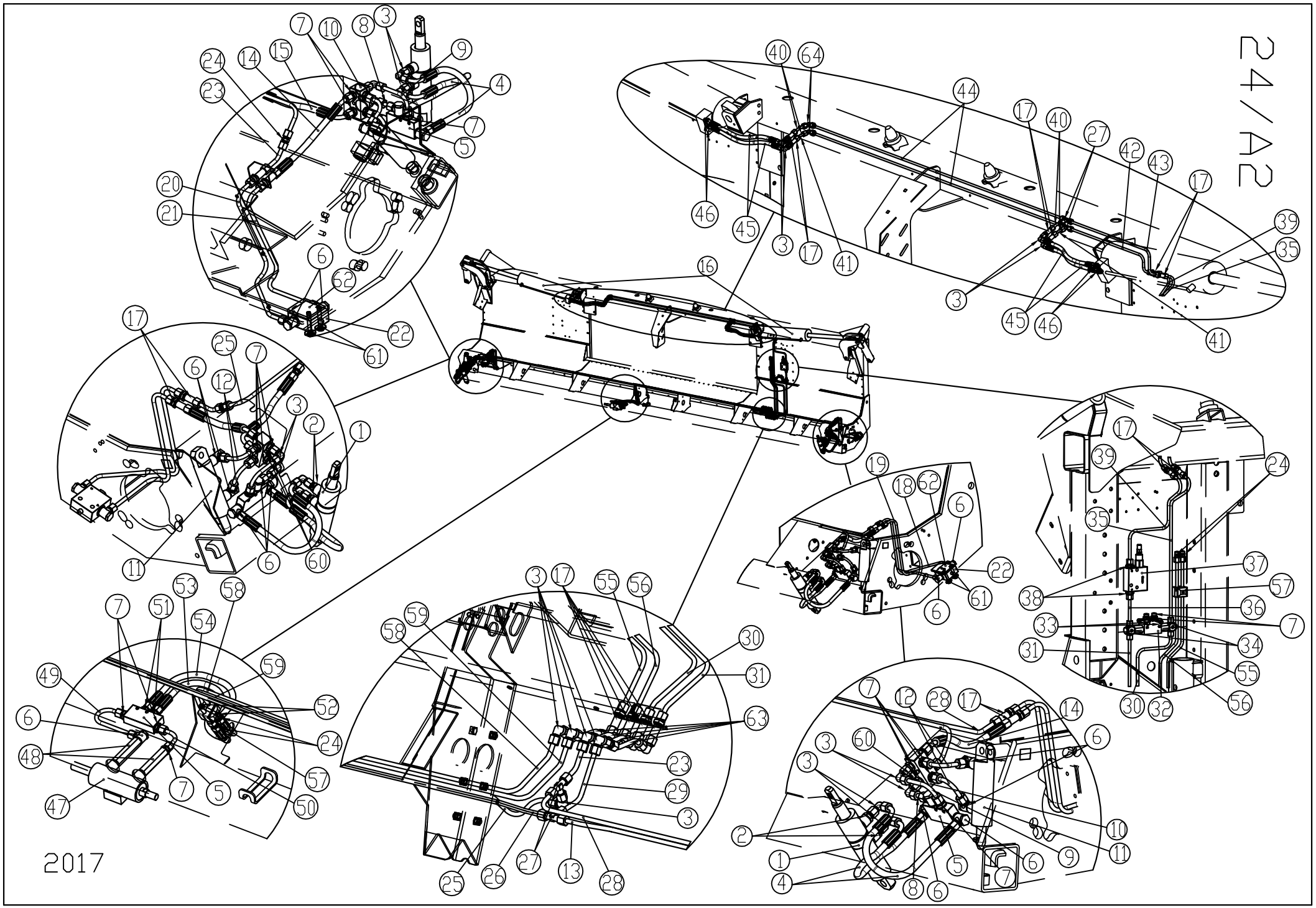
24/42
2017

24/A2

HYDRAULIC FOLDING 2016 →

Ref.	Part Number	Description		6+2x3 R 70cm	6+2x3 R 76.2cm
47.	1.373.725	Hydraulic cylinder		1	1
48.	1.378.696	Fitting - GE8PLR-ED		2	2
49.	1.373.449	Hydraulic tube		1	1
50.	1.373.991	Hydraulic tube		1	1
51.	1.379.776	Orifice DIA 0,5		2	2
52.	79406005066	Hex bolt - M6X50 - DIN933		2	2
	74906000066	Hex nut - plastic insert - M6 - DIN982		2	2
53.	1.373.585	Hydraulic hose - 1SNDN6-470		1	1
54.	1.373.488	Hydraulic hose - 1SNDN6-535		1	1
55.	1.379.065	Hydraulic tube - (L=609,7)		1	1
56.	1.379.066	Hydraulic tube - (L=610,7)		1	1
57.	1.377.061	Clamp		2	2
58.	1.377.072	Hydraulic tube - (L=1501,5)		-	1
58.	1.373.304	Hydraulic tube		1	-
59.	1.377.073	Hydraulic tube - (L=1531,5)		-	1
59.	1.373.305	Hydraulic tube		1	-
60.	80208001666	Hex socket head cap bolt - M8X16 - DIN912/8.8		2	2
	71808000060	Spring washer - M8 - DIN7980		2	2
61.	79408005066	Hex bolt - M8X50 - DIN933/8.8		4	4
	96702378160	Washer - M8 - DIN9021		4	4
62.	1.373.327	Washer		2	2
63.	1.379.067	Hydraulic tube		2	2
64.	1.377.021	Fitting - M14x1.5		2	2

Note: * Loose parts

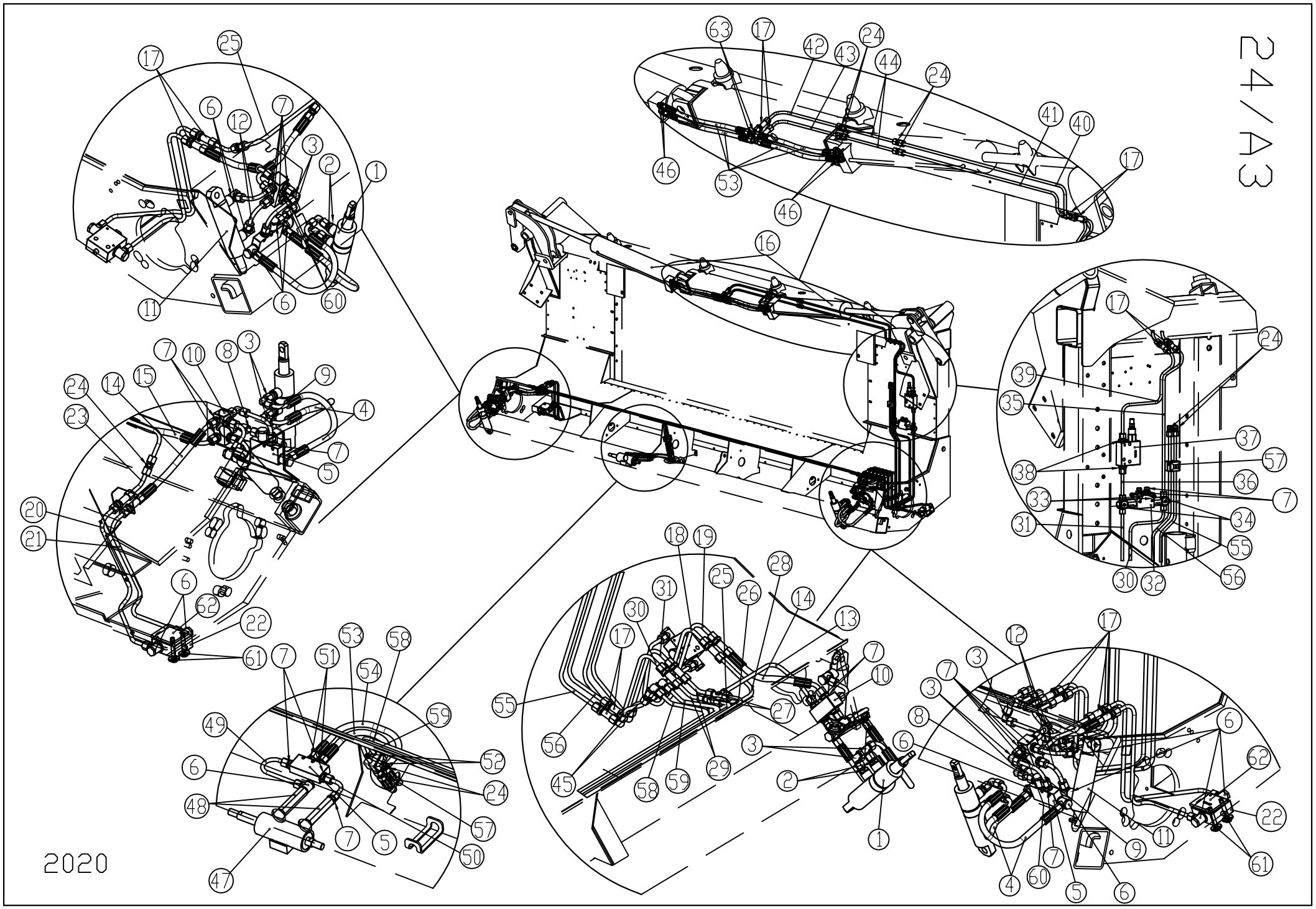
24/A3
2020

24/A3

HYDRAULIC FOLDING 2016 →

Ref.	Part Number	Description		4+2 R 80cm	4+2x2 R 80cm
1.	1.354.397	Hydraulic cylinder		2	2
2.	1.309.601	Fitting - GE-8-PSM-ED		4	4
2.*	1.310.514	Fitting - 1 mm hole		4	4
3.	1.314.510	Fitting - 90deg. EVW 8 PL		14	14
4.	1.379.477	Hydraulic hose - 1SNDN6-410		4	4
5.	1.379.458	Dual controlled check valve - FPDLE 1/4 GS		3	3
6.	1.314.509	Fitting - SVWE 8 PL		15	15
7.	1.375.669	Fitting - GE8PLR-ED		19	19
8.	1.379.456	Hydraulic tube - (L=45)		2	2
9.	1.379.457	Hydraulic tube		2	2
10.	1.378.522	Divider		2	2
11.	1.356.118	Hydraulic cylinder		2	2
12.	1.378.612	Hydraulic tube		4	4
13.	1.373.576	Hydraulic tube		1	1
14.	1.378.619	Hydraulic hose - 1SNDN6-262		1	1
15.	1.330.757	Hydraulic hose - 1SNDN6-200		1	1
16.	1.376.278	Hydraulic cylinder		2	-
16.	1.375.144	Hydraulic cylinder		-	2
17.	1.308.783	Fitting - bulkhead - HYP 160-8-575 SV8		12	12
18.	1.373.577	Hydraulic tube		1	1
19.	1.373.313	Hydraulic tube		1	1
20.	1.373.315	Hydraulic tube		1	1
21.	1.373.314	Hydraulic tube		1	1
22.	1.378.526	Endswitch - VFCA - 1401		2	2
23.	1.377.076	Hydraulic tube		1	1
24.	1.377.062	Fitting - M14X1.5		12	12
25.	1.373.578	Hydraulic tube		1	1
26.	1.373.579	Hydraulic tube		1	1
27.	1.354.511	T-form - T8PL		2	2
28.	1.373.580	Hydraulic tube		1	1
29.	1.377.074	Hydraulic tube		1	1
30.	1.373.582	Hydraulic tube		1	1
31.	1.373.581	Hydraulic tube		1	1
32.	1.378.837	Dual controlled check valve - FDP 1/4		1	1
33.	79406004066	Hex bolt - M6X40		2	2
	74906000066	Hex nut - plastic insert - M6 - DIN982		2	2
34.	1.378.836	T-form - TH-8-PLR		2	2
35.	1.373.583	Hydraulic tube		1	1
36.	1.378.844	Hydraulic tube		1	1
37.	96703800001	Pressure limit valve - C. VS2 3/8"		1	1
38.	1.353.318	Fitting - M14X1.5 G3/8		2	2
39.	1.373.584	Hydraulic tube		1	1
40.	1.373.328	Hydraulic tube		1	1
41.	1.373.330	Hydraulic tube		1	1
42.	1.373.329	Hydraulic tube		1	1
43.	1.373.331	Hydraulic tube		1	1
44.	1.372.268	Hydraulic tube		2	2
45.	1.379.067	Hydraulic tube		2	2
46.	1.310.514	Fitting - 1 mm hole		4	4
46.*	1.355.481	Fitting - 0,7 mm hole		4	4

Note: * Loose parts

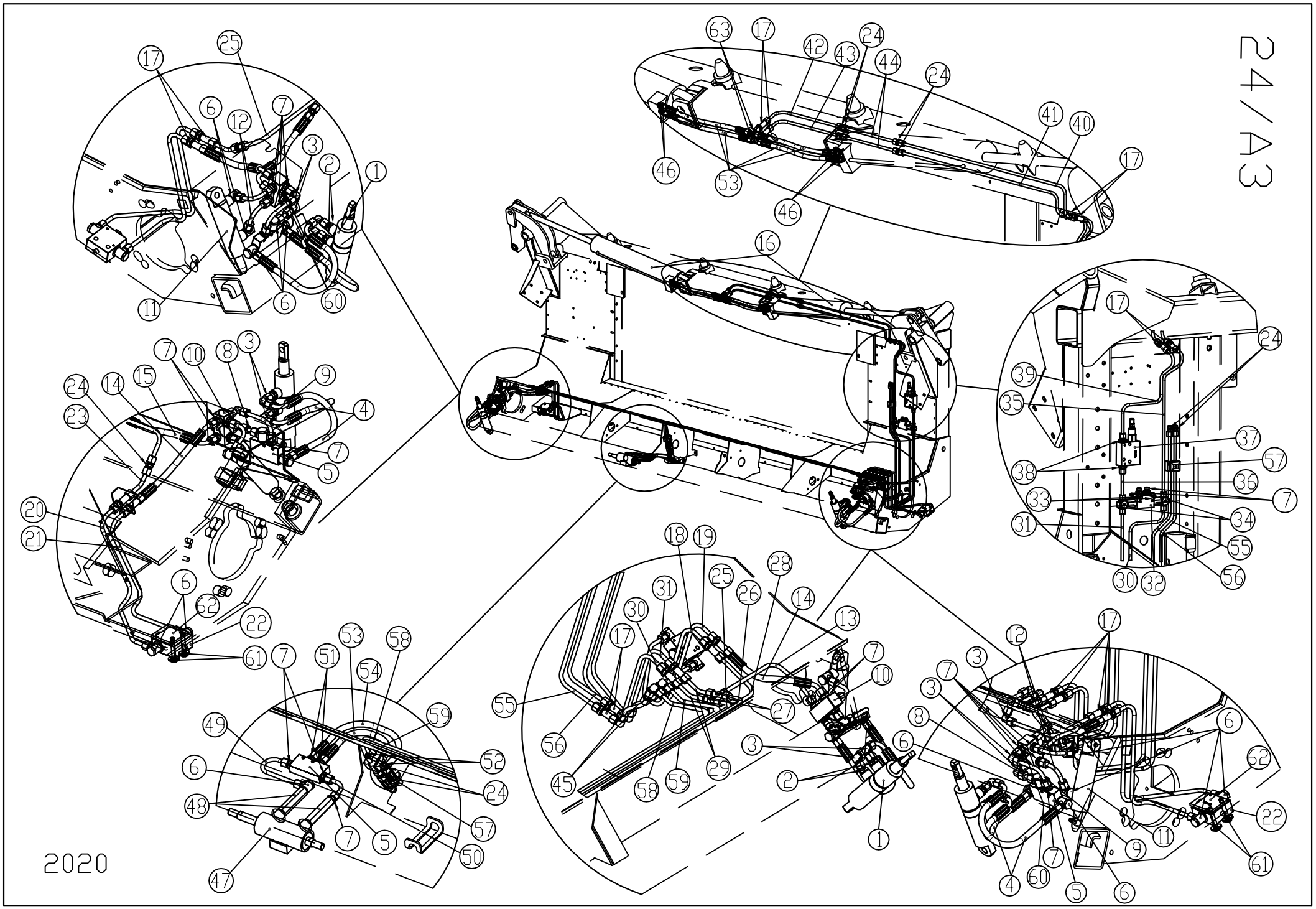
24/A3
2020

24/A3

HYDRAULIC FOLDING 2016 →

Ref.	Part Number	Description		4+2 R 80cm	4+2x2 R 80cm
47.	1.373.725	Hydraulic cylinder		1	1
48.	1.378.696	Fitting - GE8PLR-ED		2	2
49.	1.373.449	Hydraulic tube		1	1
50.	1.373.991	Hydraulic tube		1	1
51.	1.379.776	Orifice DIA 0,5		2	2
52.	79406005066	Hex bolt - M6X50 - DIN933		2	2
	74906000066	Hex nut - plastic insert - M6 - DIN982		2	2
53.	1.373.585	Hydraulic hose - 1SNDN6-470		5	5
54.	1.373.488	Hydraulic hose - 1SNDN6-535		1	1
55.	1.379.065	Hydraulic tube - (L=609,7)		1	1
56.	1.379.066	Hydraulic tube - (L=610,7)		1	1
57.	1.377.061	Clamp		2	2
58.	1.377.072	Hydraulic tube - (L=1501,5)		1	1
59.	1.377.073	Hydraulic tube - (L=1531,5)		1	1
60.	80208001666	Hex socket head cap bolt - M8X16 - DIN912/8.8		2	2
	71808000060	Spring washer - M8 - DIN7980		2	2
61.	79408005066	Hex bolt - M8X50 - DIN933/8.8		4	4
	96702378160	Washer - M8 - DIN9021		4	4
62.	1.373.327	Washer		2	2
63.	1.314.511	T-form - EVT 8 PL		2	2

Note: * Loose parts

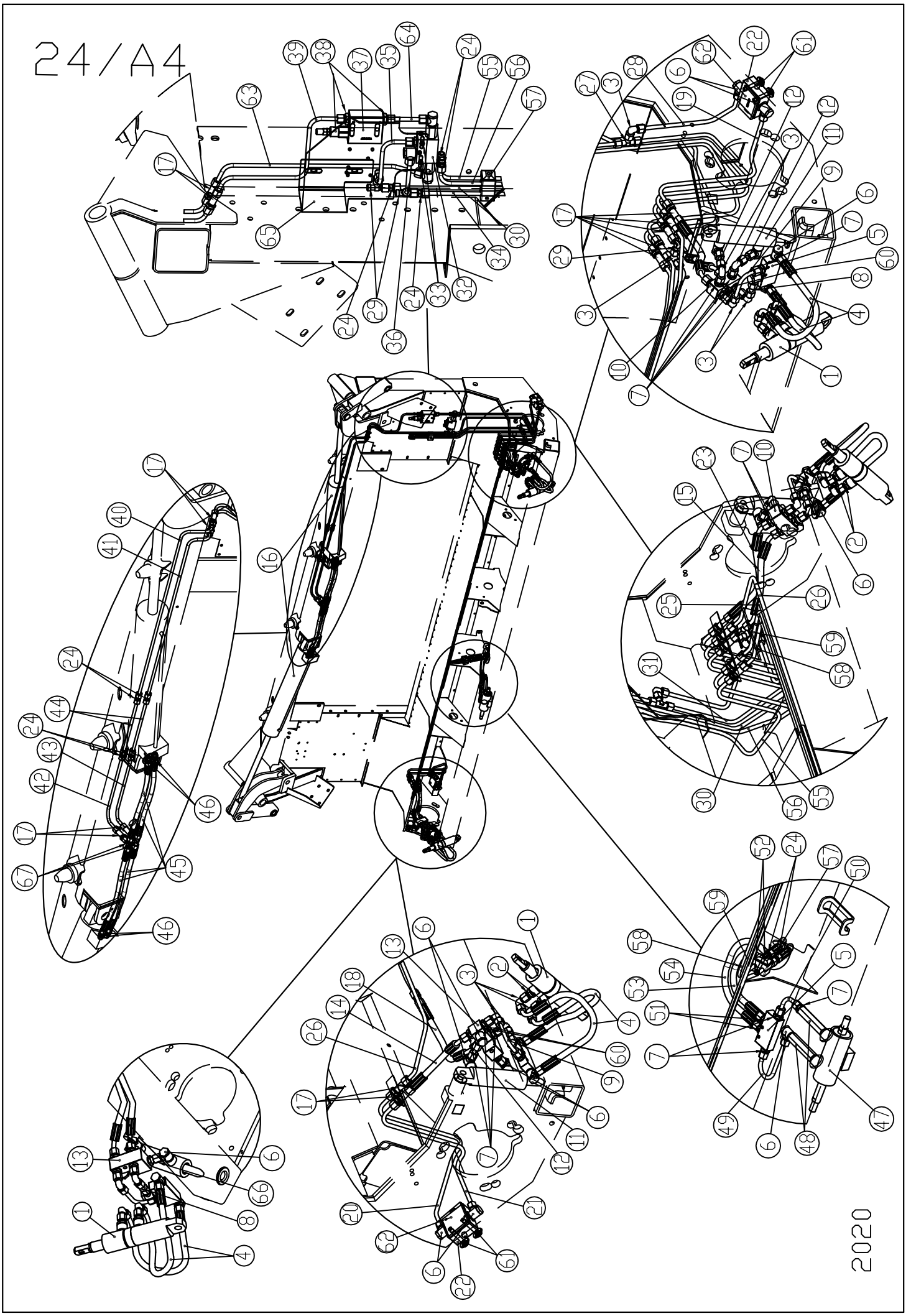
24/A4
2020

24/A4

HYDRAULIC FOLDING 2016 →

Ref.	Part Number	Description		4+2 R 70m	4+2x2 R 70cm
1.	1.354.397	Hydraulic cylinder		2	2
2.	1.309.601	Fitting - GE-8-PSM-ED		4	4
2.*	1.310.514	Fitting - 1 mm hole		4	4
3.	1.314.510	Fitting - 90deg. EVW 8 PL		13	13
4.	1.379.477	Hydraulic hose - 1SNDN6-410		4	4
5.	1.379.458	Dual controlled check valve - FPDLE 1/4 GS		3	3
6.	1.314.509	Fitting - SVWE 8 PL		19	19
7.	1.375.669	Fitting - GE8PLR-ED		18	18
8.	1.379.456	Hydraulic tube - (L=45)		2	2
9.	1.379.457	Hydraulic tube		2	2
10.	1.378.522	Divider		1	1
11.	1.356.118	Hydraulic cylinder		2	2
12.	1.373.326	Hydraulic tube		3	3
13.	1.373.311	Divider		1	1
14.	1.378.619	Hydraulic hose - 1SNDN6-320 M14x1.5/45		1	1
15.	1.373.310	Hydraulic hose - 1SNDN6-232 M14x1.5		1	1
16.	1.376.278	Hydraulic cylinder		2	-
16.	1.375.144	Hydraulic cylinder		-	2
17.	1.308.783	Fitting - bulkhead - HYP 160-8-575 SV8		11	11
18.	1.373.308	Hydraulic hose - 1SNDN6-299 M14x1.5/45		1	1
19.	1.373.313	Hydraulic tube		1	1
20.	1.373.315	Hydraulic tube		1	1
21.	1.373.314	Hydraulic tube		1	1
22.	1.378.526	Endswitch - VFCA - 1401		2	2
23.	1.373.309	Hydraulic hose - 1SNDN6-276 M14x1.5/45		1	1
24.	1.377.062	Fitting - M14X1.5		11	11
25.	1.373.306	Hydraulic tube		1	1
26.	1.373.307	Hydraulic tube		1	1
27.	1.354.511	T-form - T8PL		1	1
28.	1.373.312	Hydraulic tube		1	1
29.	1.329.316	T-form - EL8PL		3	3
30.	1.373.318	Hydraulic tube		1	1
31.	1.373.319	Hydraulic tube		1	1
32.	1.378.837	Dual controlled check valve - FDP 1/4		1	1
33.	79406004066	Hex bolt - M6X40		2	2
	74906000066	Hex nut - plastic insert - M6 - DIN982		2	2
34.	1.373.320	Hydraulic tube		1	1
35.	1.373.325	Hydraulic tube		1	1
36.	1.373.323	Hydraulic tube		1	1
37.	96703800001	Pressure limit valve - C. VS2 3/8"		1	1
38.	1.353.318	Fitting - M14X1.5 G3/8		2	2
39.	1.373.324	Hydraulic tube		1	1
40.	1.373.328	Hydraulic tube		1	1
41.	1.373.330	Hydraulic tube		1	1
42.	1.373.329	Hydraulic tube		1	1
43.	1.373.331	Hydraulic tube		1	1
44.	1.372.268	Hydraulic tube		2	2
45.	1.373.332	Hydraulic hose - 1SNDN6-220 M14x1.5		4	4
46.	1.310.514	Fitting - 1 mm hole		4	4
46.*	1.355.481	Fitting - 0,7 mm hole		4	4

Note: * Loose parts

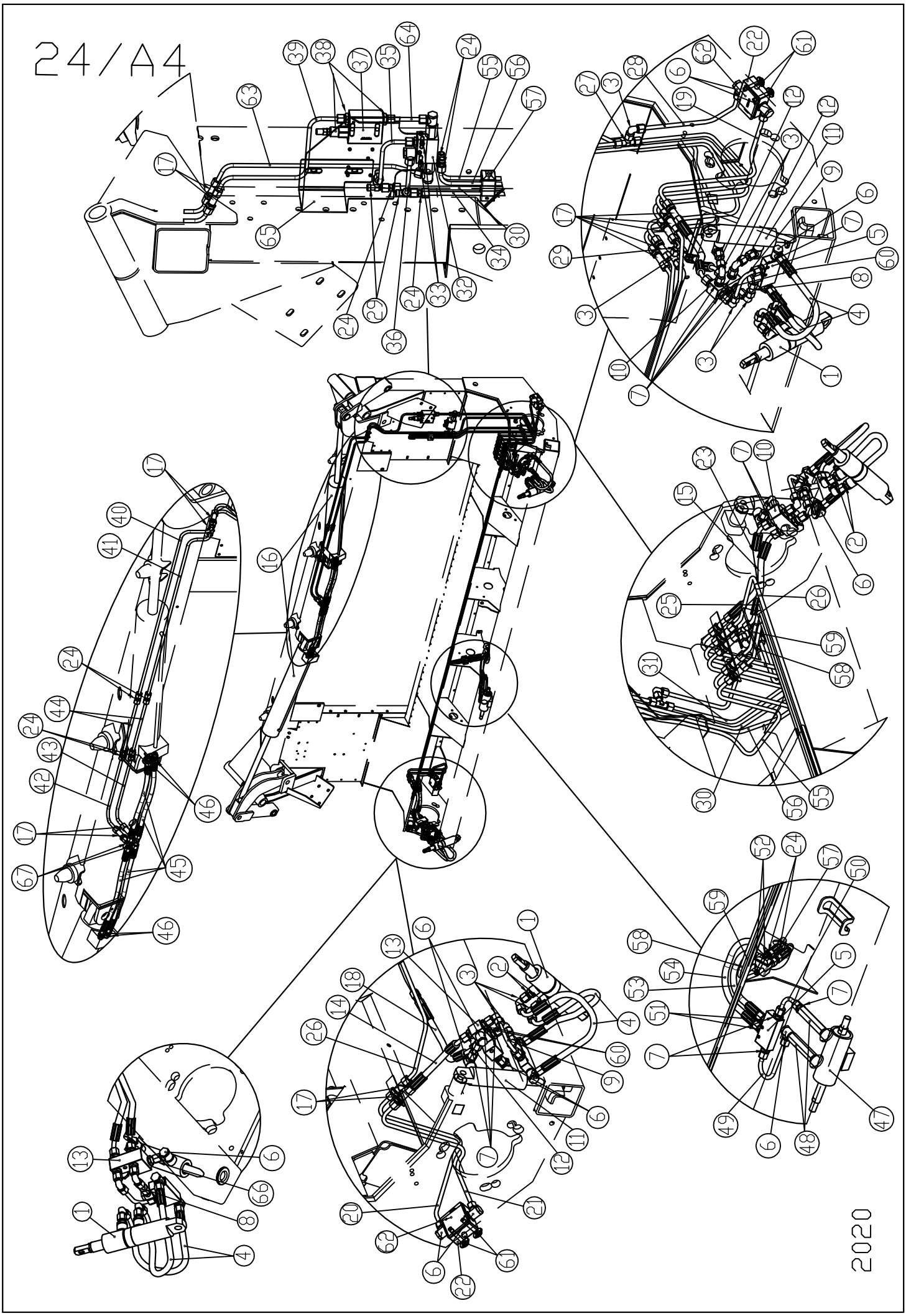
24/A4
2020

24/A4

HYDRAULIC FOLDING 2016 →

Ref.	Part Number	Description		4+2 R 70m	4+2x2 R 70cm
47.	1.373.725	Hydraulic cylinder		1	1
48.	1.378.696	Fitting - GE8PLR-ED		2	2
49.	1.373.449	Hydraulic tube		1	1
50.	1.373.991	Hydraulic tube		1	1
51.	1.379.776	Orifice DIA 0,5		2	2
52.	79406005066	Hex bolt - M6X50 - DIN933		3	3
	74906000066	Hex nut - plastic insert - M6 - DIN982		3	3
53.	1.373.585	Hydraulic hose - 1SNDN6-470		1	1
54.	1.373.488	Hydraulic hose - 1SNDN6-535		1	1
55.	1.373.316	Hydraulic tube		1	1
56.	1.373.317	Hydraulic tube		1	1
57.	1.377.061	Clamp		3	3
58.	1.373.304	Hydraulic tube		1	1
59.	1.373.305	Hydraulic tube		1	1
60.	80208001666	Hex socket head cap bolt - M8X16 - DIN912/8.8		2	2
	71808000060	Spring washer - M8 - DIN7980		2	2
61.	79408005066	Hex bolt - M8X50 - DIN933/8.8		4	4
	96702378160	Washer - M8 - DIN9021		4	4
62.	1.373.327	Washer		2	2
63.	1.373.321	Hydraulic tube		1	1
64.	1.373.322	Hydraulic tube		1	1
65.	1.373.618	Support plate		1	1
66.	1.355.187	Fitting - EGE-8-LR-ED		1	1
67.	1.314.511	T-form - EVT 8 PL		2	2

Note: * Loose parts

24/B

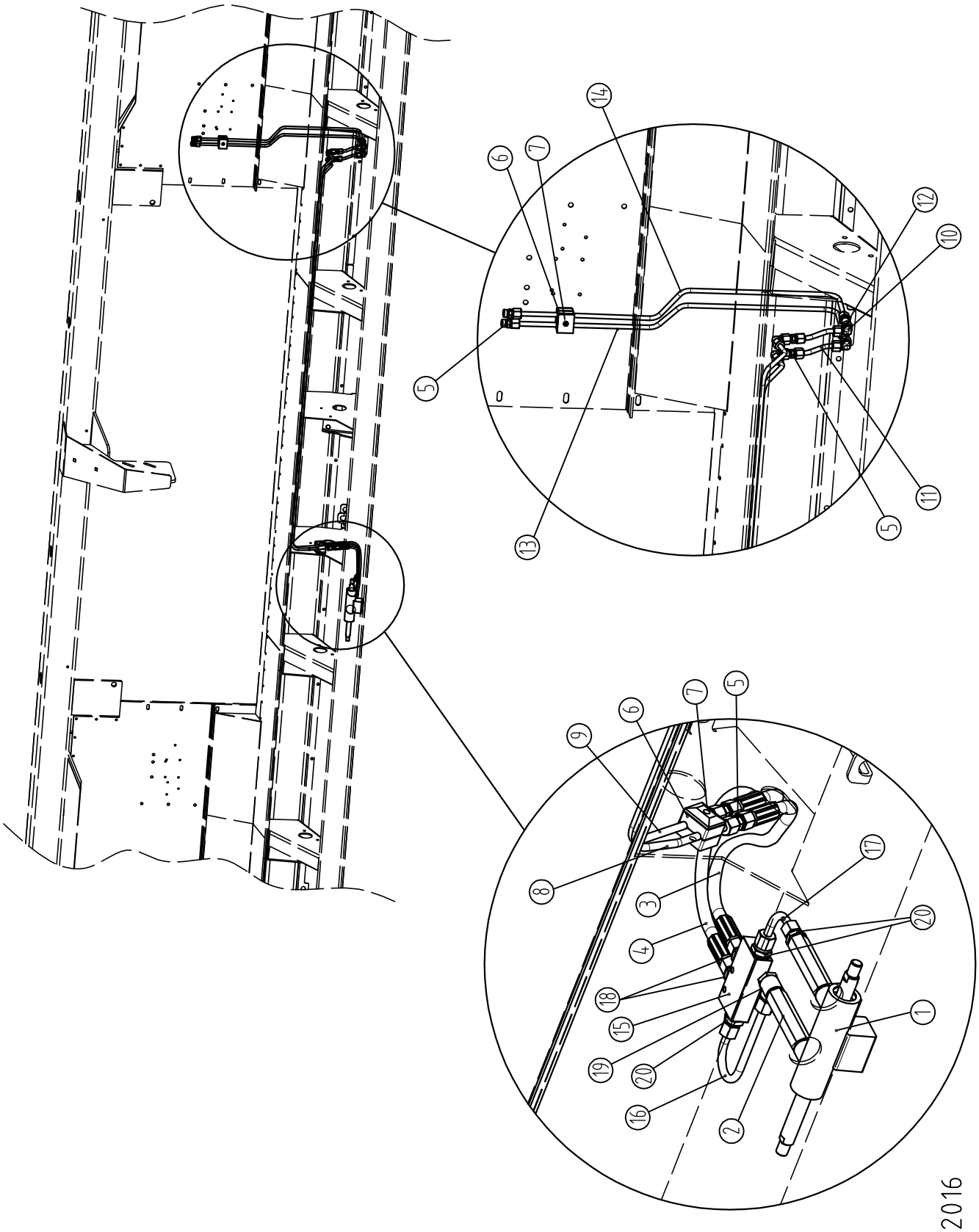

2016

HYDRAULIC RIGID (2014→)

Ref.	Part Number		6 R 70 - 76,2 cm	8 R 70 - 76,2 cm	8R 96,5 cm	12 R 70 -76,2 cm	8 R 50 - 56 cm	12 R 50 - 56 cm	16 R
1.	1.376.104	→2015	1	1	1	1	1	1	1
1.	1.373.725	2016→	1	1	1	1	1	1	1
2.	1.378.696	2012→	2	2	2	2	2	2	2
3.	1.376.795	→2015	1	1	1	1	1	1	1
3.	1.373.585	2016→	1	1	1	1	1	1	1
4.	1.330.772	→2015	1	1	1	1	1	1	1
4.	1.373.488	2016→	1	1	1	1	1	1	1
5.	1.377.062		4	4	4	4	6	6	6
6.	1.377.061		2	2	2	2	2	2	2
7.	79406005066		2	2	2	2	2	2	2
-	74900600066		2	2	2	2	2	2	2
8.	1.377.073		1	1	-	1	-	-	1
8.	1.372.762		-	-	1	-	-	-	-
8.	1.379.679		-	-	-	-	1	1	-
9.	1.377.072		1	1	-	1	-	-	1
9.	1.372.761		-	-	1	-	-	-	-
9.	1.379.678		-	-	-	-	1	1	-
10.	1.314.510		-	-	-	-	4	4	4
11.	1.379.067		-	-	2	-	2	2	2
12.	1.308.783		2	2	2	2	2	2	2
13.	1.379.065	2016→	1	1	1	1	1	1	1
13.	1.377.065	→2015	1	1	1	-	-	-	-
13.	1.378.637	→2015	-	-	-	1	-	-	-
14.	1.379.066	2016→	1	1	1	1	1	1	1
14.	1.377.066	→2015	1	1	1	-	-	-	-
14.	1.378.638	→2015	-	-	-	1	-	-	-
15.	1.379.458	2016→	1	1	1	1	1	1	1
16.	1.373.449	2016→	1	1	1	1	1	1	1
17.	1.373.991	2016→	1	1	1	1	1	1	1
18.	1.379.776		2	2	2	2	2	2	2
19.	1.314.509	2016→	1	1	1	1	1	1	1
20.	1.375.669	2016→	3	3	3	3	3	3	3

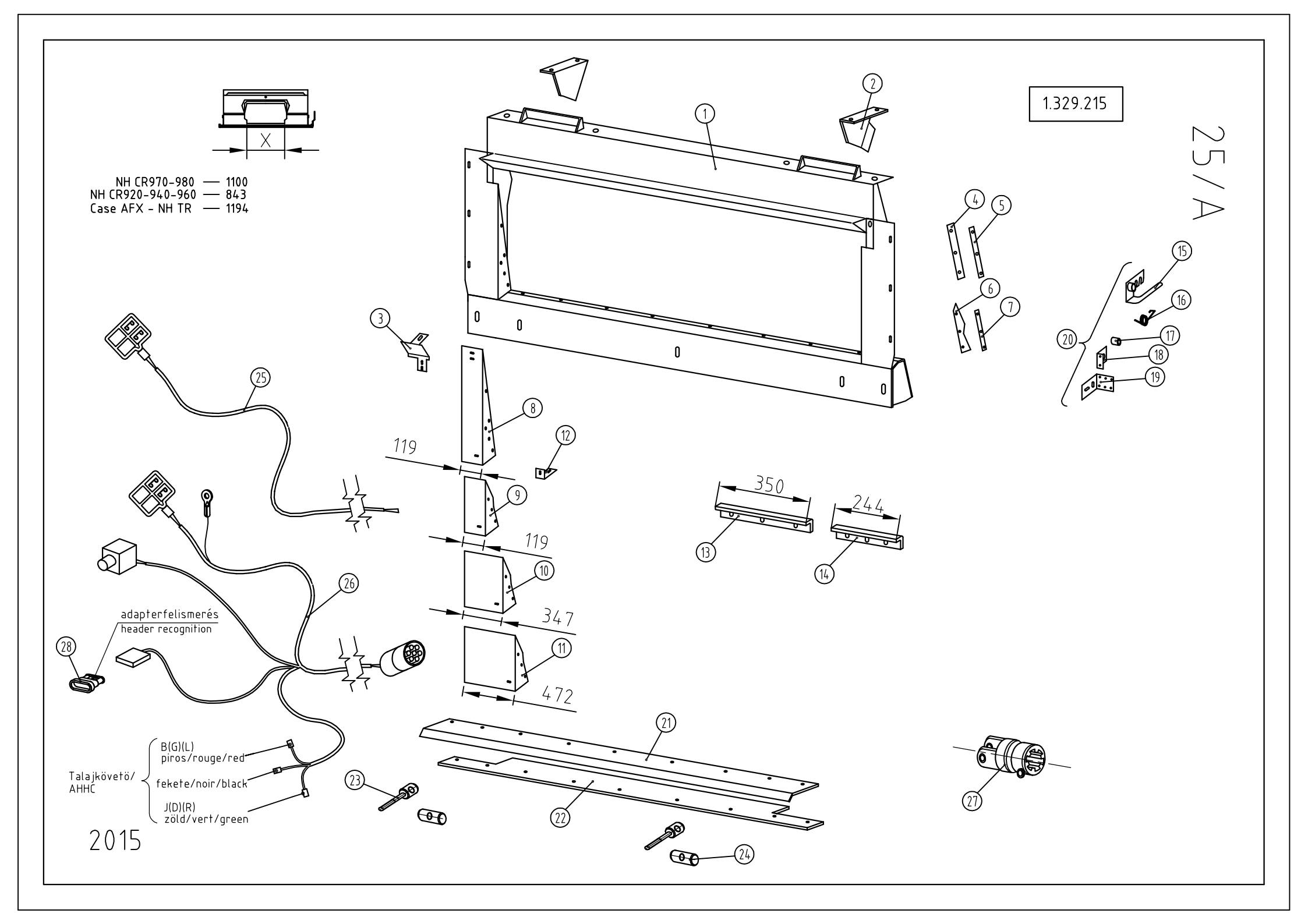
1.329.215
25/A
X
NH CR970-980 — 1100
NH CR920-940-960 — 843
Case AFX - NH TR — 1194
1
2
3
4
5
6
7
8
9
10
11
12
13
14
15
16
17
18
19
20
21
22
23
24
25
26
27
28
119
119
347
472
350
244
adapterfelismerés
header recognition
Talajkövetö/
AHHC
B(G)(L)
piros/rouge/red
fekete/noir/black
J(D)(R)
zöld/vert/green
2015

MOUNTING KIT: CNH CX, CR, TR, CASE AFX (2010-2015. FOLDING; FIXED 2011-2015)

Ref.	Part Number	Description		6-8R	12-16R
1.	1.329.216	Frame assy		1	1
2.	1.326.285	Inlet - left NH TR		1	1
2.	1.326.286	Inlet - right NH TR		1	1
3.	1.329.238	Inlet - left for NH TR		1	1
3.	1.329.239	Inlet - right for NH TR		1	1
4.	1.328.547	Rubber plate	→2019	2	2
4.	1.372.947	Rubber plate	2020→	2	2
5.	1.328.548	Flat iron		2	2
6.	1.329.254	Rubber plate	→2019	2	2
6.	1.372.948	Rubber plate	2020→	2	2
7.	1.329.255	Flat iron		2	2
8.	1.329.236	Inlet - left l=119 for NH TR		1	1
8.	1.329.237	Inlet - right l=119 for NH TR		1	1
9.	1.329.240	Inlet - left l=119 for NH AFX		1	1
9.	1.329.241	Inlet - right l=119 for NH AFX		1	1
10.	1.329.242	Inlet - left l=347 for NH CR970-980		1	1
10.	1.329.243	Inlet - right l=347 for NH CR970-980		1	1
11.	1.329.244	Inlet - left l=472 for NH CR920-940-960		1	1
11.	1.329.245	Inlet - right l=472 for NH CR920-940-960		1	1
12.	1.329.235	Support		2	2
13.	1.329.294	Angle - for NH TR		-	-
13.	1.329.294	Angle - for AFX		-	-
13.	1.329.294	Angle - for NH CR970-980	→2013	1	1
13.	1.379.632	Angle - for NH CR970-980	2014→	1	1
13.	1.329.294	Angle - for NH CR920-940-960	→2013	2	2
13.	1.379.632	Angle - for NH CR920-940-960	2014→	2	2
14.	1.329.295	Angle - for NH TR	→2013	2	2
14.	1.379.631	Angle - for NH TR	2014→	2	2
14.	1.329.295	Angle - for AFX	→2013	2	2
14.	1.379.631	Angle - for AFX	2014→	2	2
14.	1.329.295	Angle - for NH CR970-980		-	-
14.	1.329.295	Angle - for NH CR920-940-960	→2013	2	2
14.	1.379.631	Angle - for NH CR920-940-960	2014→	2	2
15.	1.329.247	Arm assy		1	1
16.	1.329.253	Spring		1	1
17.	1.329.250	Bushing		1	1
18.	1.329.251	Support plate		1	1
19.	1.329.296	Support		1	1
20.	1.329.246	Support assy NH (items 15-19.)		1	1
21.	1.329.233	Flat iron		1	1
22.	1.329.234	Rubber plate	→2019	1	1
22.	1.372.949	Rubber plate	2020→	1	1
23.	1.327.601	Retainer - for NH TR only		2	2
24.	1.327.536	Pin - for NH TR only		2	2
25.	1.327.638	Wire		1	1
26.	1.353.422	Wire CASE AFX, NH CR (see note below!)		1	1
26.	1.353.561	Wire CASE AFX, NH CR (see note below!)		1	1
27.	1.327.663	Yoke - 6spline (P400)		2	2
27.	1.327.488	Yoke - 6spline (P500)	2016-2017.	-	2
28.	1.332.458	Header recognizer	2014→	1	1
	1.329.215	Mounting kit (items 1- 22.)		1	1

Note for item: 26.- 1.353.422 is for those machines which have hydraulic snapping plate adjustment
26.- 1.353.561 is for those machines which have electric snapping plate adjustment

1.379.308

25/B

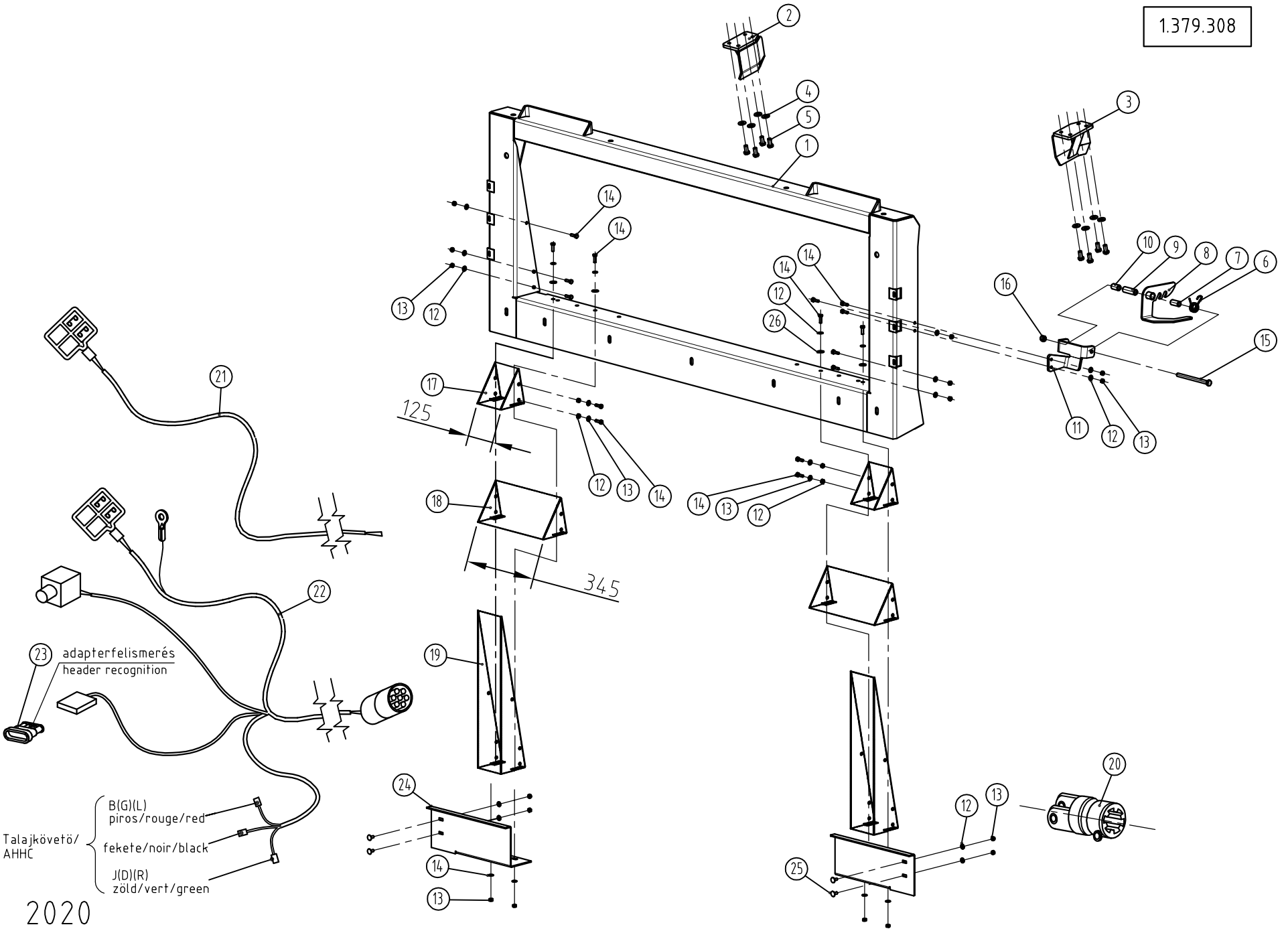
adapterfelismerés
header recognition
Talajkövető/
AHHC
B(G)(L)
piros/rouge/red
fekete/noir/black
J(D)(R)
zöld/vert/green
125
345
2020

MOUNTING KIT: CNH CX, CR, TR, TX, TC, TF, CASE AFX (2016→)

Ref.	Part Number	Description		6-8 R	12-16 R
1.	1.379.307	Frame assy		1	1
2.	1.376.548	Inlet - right NH TX 62,64,66,68 ; TC 56,59 ; TF 76 → 2002		1	1
3.	1.376.547	Inlet - left NH TX 62,64,66,68 ; TC 56,59 ; TF 76 → 2002		1	1
4.	91623938861	Spring washer-A10		8	8
5.	79410002566	Hex bolt M10x25		8	8
6.	1.329.253	Spring		1	1
7.	1.329.250	Bushing		1	1
8.	1.329.247	Arm assy		1	1
9.	1.376.541	Spacer		1	1
10.	1.376.542	Spacer		1	1
11.	1.372.283	Support		1	1
12.	91623938761	Spring washer - A8		18	18
13.	73508000066	Hex nut - M8		18	18
14.	79408002566	Hex bolt M8x25		18	18
15.	79312016066	Hex bolt M12x160		1	1
16.	74901200066	Lock nut - plastic insert M12		1	1
17.	1.379.322	Inlet l=125		2	2
18.	1.379.323	Inlet l=345		2	2
19.	1.372.282	Inlet NH TX 62,64,66,68 ; TC 56,59 ; TF 76 → 2002		2	2
20.	1.327.663	Yoke - 6spline (P400)		2	2
20.	1.327.488	Yoke - 6spline (P500)	2016-2017.	-	2
20.*	1.327.662	Yoke - 21spline (P400)		2	2
21.	1.327.638	Wire		1	1
22.	1.353.422	Wire CASE AFX, NH CR (see note below!)		1	1
22.	1.353.561	Wire CASE AFX, NH CR (see note below!)		1	1
23.	1.332.458	Header recognizer		1	1
24.	1.372.940	Inlet l=162.5 - LH	2020→	1	1
24.	1.372.941	Inlet l=162.5 - RH	2020→	1	1
25.	76308002566	Carriage bolt M8x25 - DIN603/8.8		4	4
26.	1.314.099	Washer		4	4
-	1.379.308	Mounting kit (items 1,2,3,4,5,6,7,8,9,10,11,12,13,14,15,16,17,18,19)		1	1
-	1.372.680	Window Frame Completion Bundle (items 1, 4 - 18)		1	1

Note for item: 22.- 1.353.422 is for those machines which have hydraulic snapping plate adjustment,
22.- 1.353.561 is for those machines which have electric snapping plate adjustment.
* For combines manufactured during or after 2017.

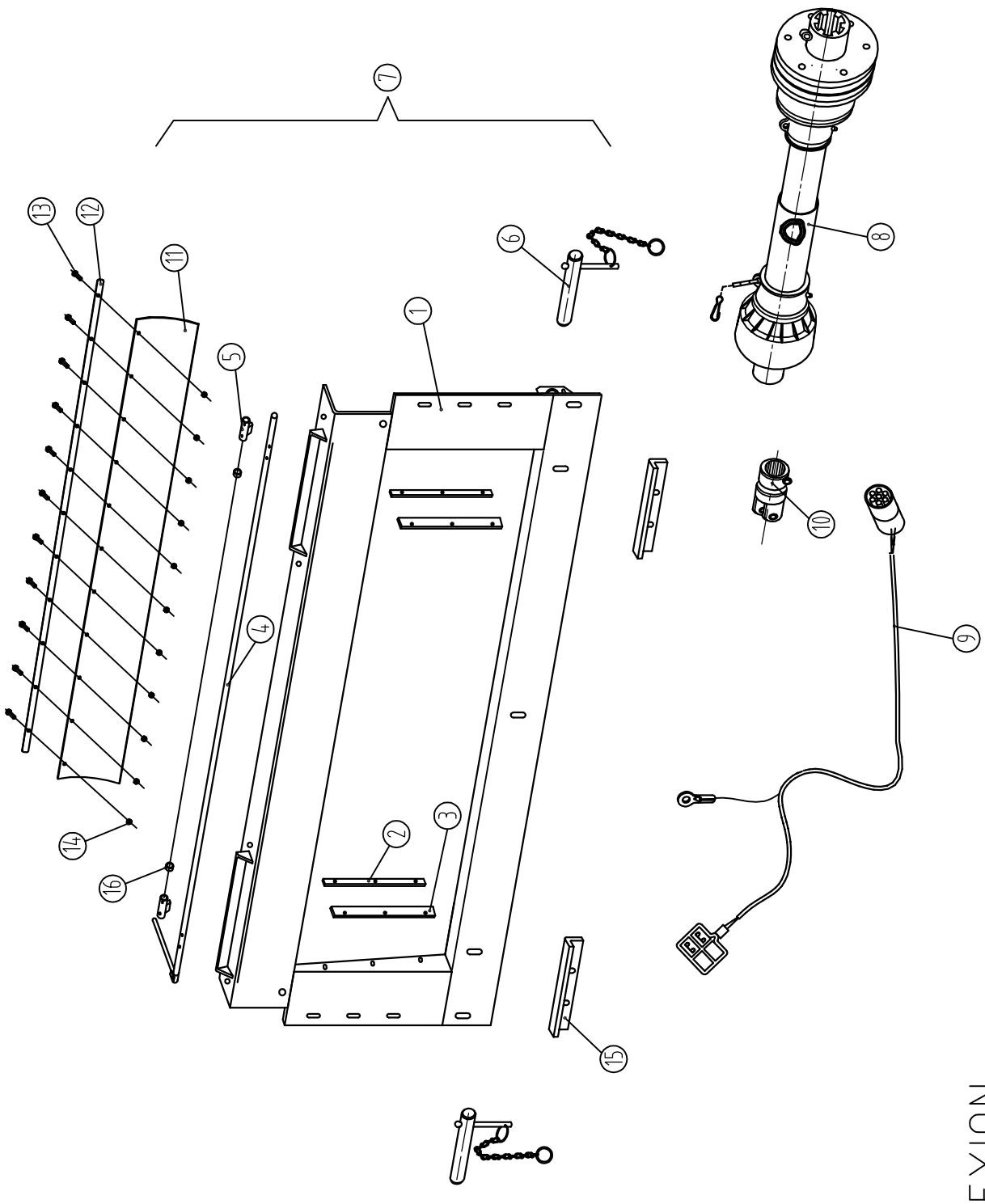

CLAAS LEXION
2020

MOUNTING KIT: LEXION

Ref.	Part Number	Description		6-8R	12-16R
1	1.329.485	Filler welded		1	1
2	1.320.280	Flat iron		2	2
3	1.328.539	Rubber plate	→2019	2	2
3	1.372.950	Rubber plate	2020→	2	2
4	1.329.500	Fixture welded		1	1
5	1.329.501	Fixture		2	2
6	1.329.498	Safety-pin		2	2
7	1.329.484	Window Frame Completion Bundle (items 1,2,3,4,5,6,11,12,13,14,15)		1	1
8	-	PTO drive shaft		See page 1!	See page 1!
9	1.354.171	Wire		1	1
10.	1.327.662	Yoke - 21spline (P400)		2	2
10.	1.327.486	Yoke - 21spline (P500)	2016-2017.	-	2
11.	1.332.478	Rubber plate	2014-2019	1	1
11.	1.372.951	Rubber plate	2020→	1	1
12.	1.332.479	Flat iron	2014→	1	1
13.	79408002566	Hex bolt M8x25 DIN933/8.8	2014→	11	11
14.	74908000066	Hex nut - plastic insert	2014→	11	11
15.	1.379.635	Angle	2014→	2	2
16.	1.309.255	Bushing	2020→	2	2

1.329.386
1.372.259 *

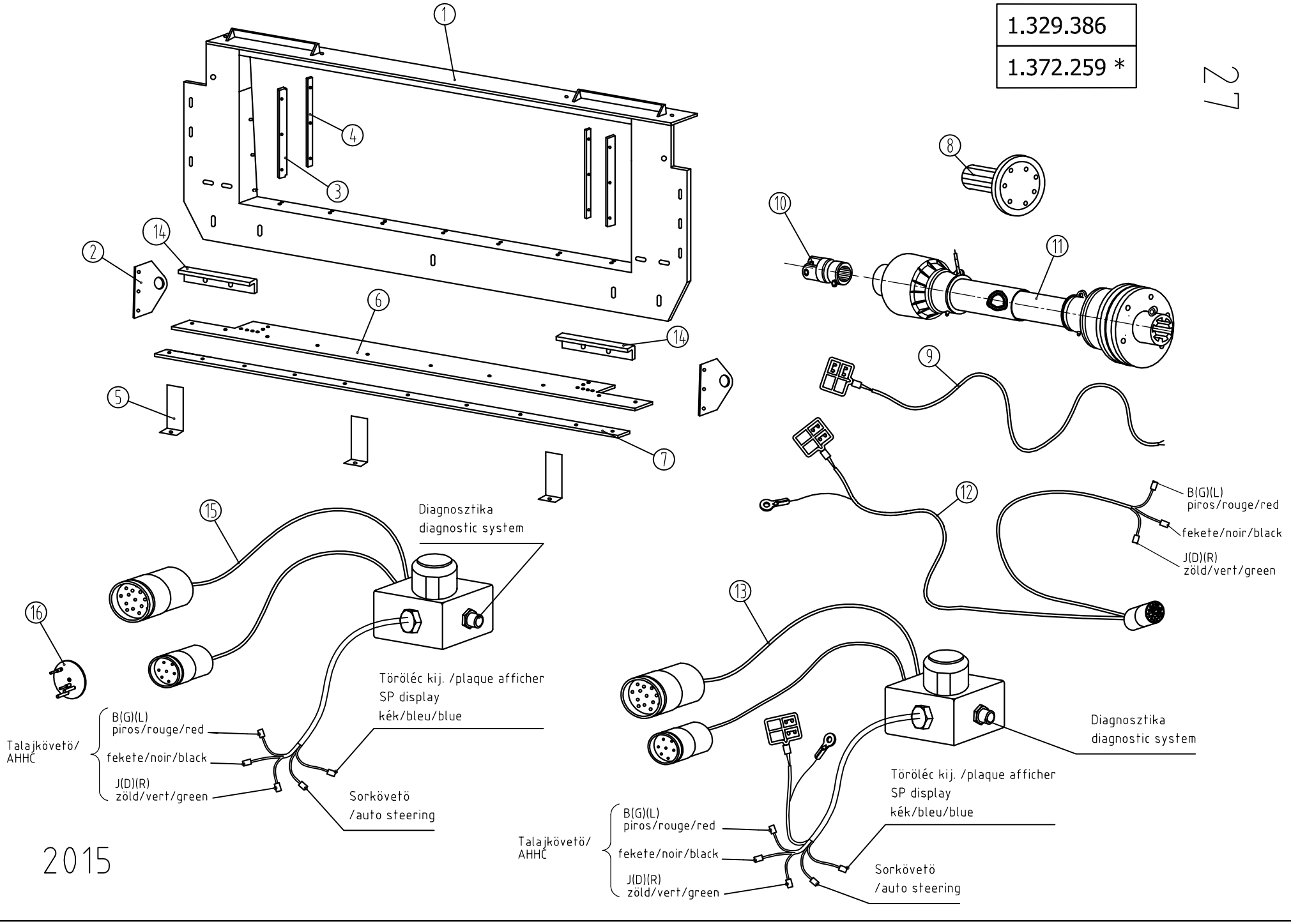

2015

MOUNTING KIT: JD -> 2018

Ref.	Part Number	Description		6-8R	12-16R
1.	1.329.387	Frame assy	→2018	1	1
1.	1.372.260 *	Frame assy	2017-2018.	1	1
1.	1.372.260	Frame assy	2019→	1	1
2.	1.329.398	Retainer		2	2
3.	1.328.539	Rubber plate	→2019	2	2
3.	1.372.950	Rubber plate	2020→	2	2
4.	1.320.280	Flat iron		2	2
5.	1.329.397	Filler		3	3
6.	1.320.828	Rubber plate	→2019	1	1
6.	1.372.952	Rubber plate	2020→	1	1
7.	1.329.400	Plate		1	1
8.	1.321.225	Shaft assy - 21 spline JD pre "60" series		2	2
9.	1.327.638	Wire JD pre "60" series		1	1
10.	1.327.662	Yoke - 21spline (P400)		2	2
10.	1.327.486	Yoke - 21spline (P500)	2016-2017.	-	2
11.	-	PTO drive shaft		See page 1!	See page 1!
12.	1.353.562	Harness JD "60" series (see note below!)		1	1
13.	1.353.559	Harness JD "60" series (see note below!)		1	1
14.	1.379.635	Angle	2014-2018.	2	2
14.	1.372.273 *	Angle left l=221	2017-2018.	1	1
14.	1.372.274 *	Angle right l=141	2017-2018.	1	1
14.	1.372.273	Angle left l=221	2019→	1	1
14.	1.372.274	Angle right l=141	2019→	1	1
15.	1.327.062	Harness (only for folding machines, see note below!)		1	1
16.	1.327.066	Jumper (only for rigid machines, see note below!)		1	1
	1.329.386	Mounting kit (items 1,2,3,4,5,6,7,14)		1	1
	1.372.259*	Mounting kit (items 1,2,3,4,5,6,7,14)	2017-2018.	1	1

Note for item: 12.- 1.353.562 is for those machines which have hydraulic snapping plate adjustment, for US only
Note for item: 13.- 1.353.559 is for those machines which have electric snapping plate adjustment, for US only
*For 4+2 & 4+2x2 Corn Heads with internal drive, mounted to JD combines (except Hill Master) with lateral tilt function only.
15-16. for EU only

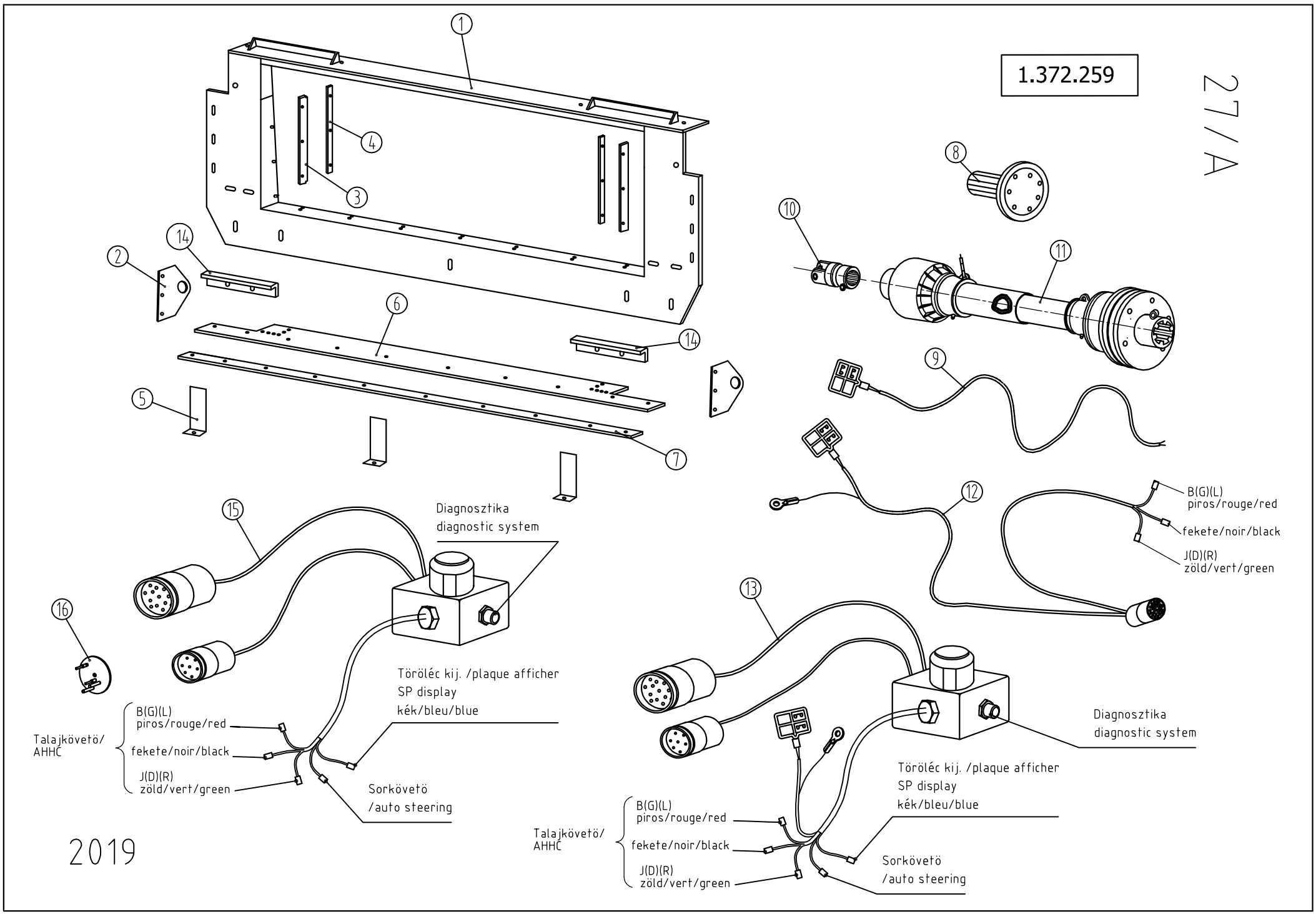
1.372.259
27/A
1
2
3
4
5
6
7
8
9
10
11
12
13
14
15
16
Diagnosztika
diagnostic system
Töröléc kij. /plaque afficher
SP display
kék/bleu/blue
Sorkövető
/auto steering
Talajkövető/
AHHC
B(G)(L)
piros/rouge/red
fekete/noir/black
J(D)(R)
zöld/vert/green
2019

27/A

MOUNTING KIT: JD 2019->

Ref.	Part Number	Description		6-8R	12-16R
1.	1.372.260	Frame assy		1	1
2.	1.329.398	Retainer		2	2
3.	1.328.539	Rubber plate	→2019	2	2
3.	1.372.950	Rubber plate	2020→	2	2
4.	1.320.280	Flat iron		2	2
5.	1.329.397	Filler		3	3
6.	1.320.828	Rubber plate	→2019	1	1
6.	1.372.952	Rubber plate	2020→	1	1
7.	1.329.400	Plate		1	1
8.	1.321.225	Shaft assy - 21 spline JD pre "60" series		2	2
9.	1.327.638	Wire JD pre "60" series		1	1
10.	1.327.662	Yoke - 21spline (P400)		2	2
10.	1.327.486	Yoke - 21spline (P500)	2016-2017.	-	2
11.	-	PTO drive shaft		See page 1!	See page 1!
12.	1.353.562	Harness JD "60" series (see note below!)		1	1
13.	1.353.559	Harness JD "60" series (see note below!)		1	1
14.	1.372.273	Angle left l=221		1	1
14.	1.372.274	Angle left l=141		1	1
15.	1.327.062	Harness (only for folding machines, see note below!)		1	1
16.	1.327.066	Jumper (only for rigid machines, see note below!)		1	1
	1.372.259	Window Frame Completion Bundle (items 1,2,3,4,5,6,7,14)		1	1

Note for item: 12.- 1.353.562 is for those machines which have hydraulic snapping plate adjustment, for US only
Note for item: 13.- 1.353.559 is for those machines which have electric snapping plate adjustment, for US only
#15-16 for EU only

Fix vázú csőtörő hidraulikus törőlécállítással
Fixed corn heads with hydr. SPA

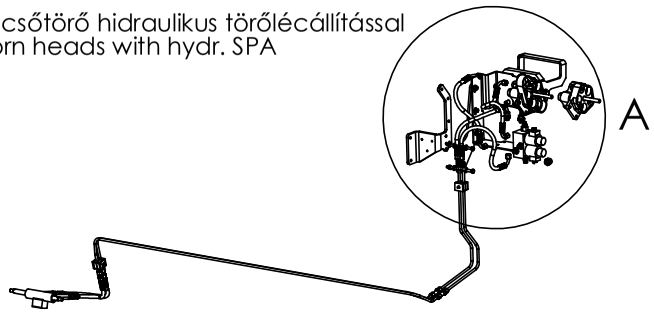

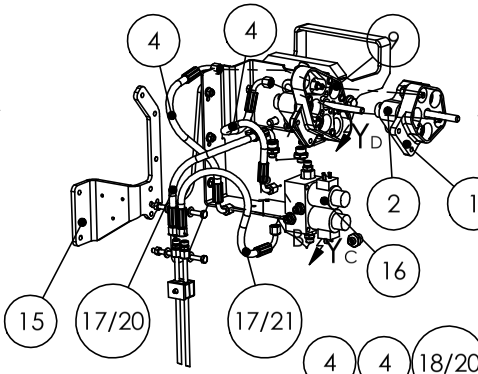

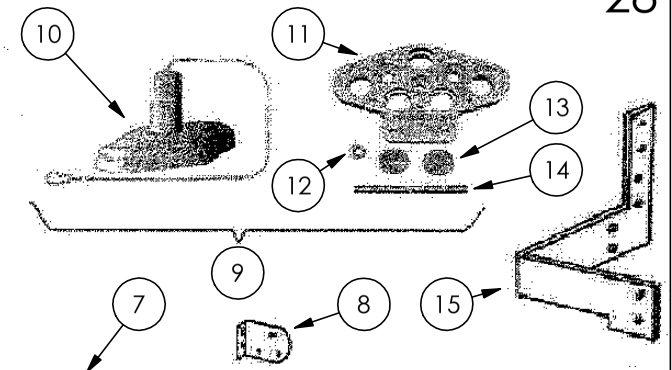

Csukható csőtörő hidraulikus törőlécállítással
Foldable corn heads with hydr. SPA

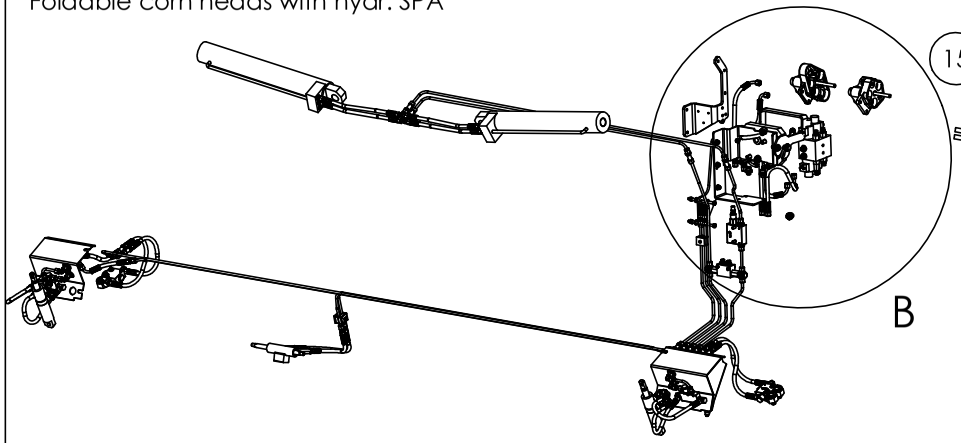

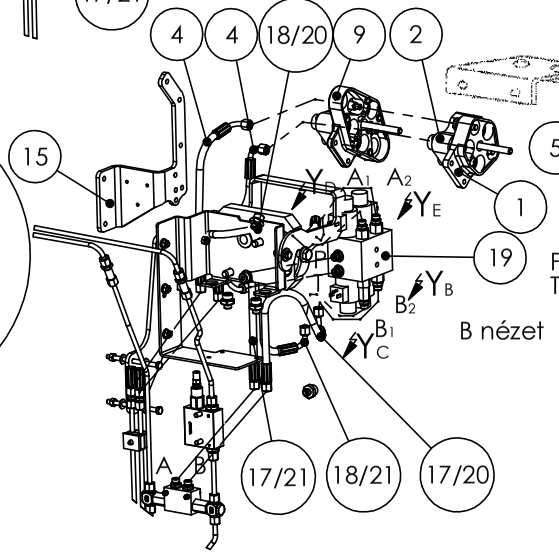

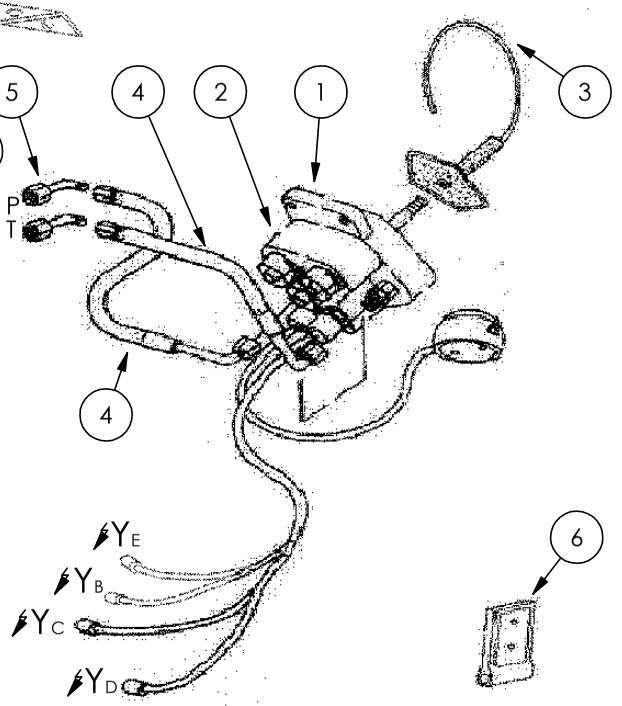

Csukható csőtörő elektormos törőlécállítással
Foldable corn heads with electr. SPA

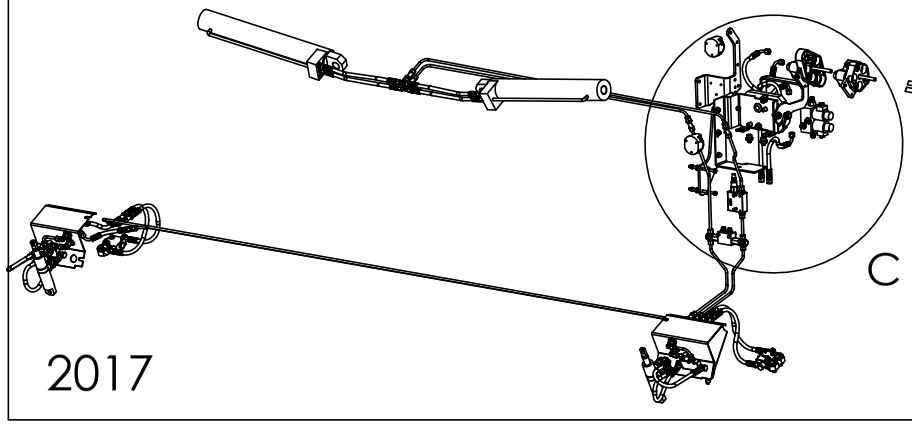

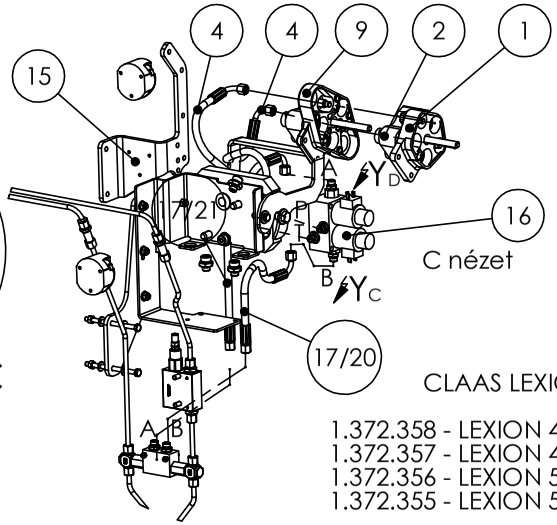

CLAAS LEXION

1.372.358 - LEXION 400for folding withelectr.SPA or rigid with hydr.SPA
1.372.357 - LEXION 400 for folding with hydr. SPA
1.372.356 - LEXION 500 for folding with electr. SPA or rigid with hydr. SPA
1.372.355 - LEXION 500 for folding with hydr. SPA

2017

HYDRAULIC MULTI-COUPLER KITS: LEXION

Ref.	Part Number	Description		Rigid models with hydr. SPA or folding models with electr. SPA	Folding models with hydr. SPA
1.	668.800.0	Multi-coupler for LEXION 400 serie		1	1
2.	013.208.3	Cable-kit		1	1
3.	668.818.0	Cover LEXION 400		1	1
4.	1.319.232	Hydraulic hose (575mm) 1SNDN6-575	→2010	2	2
4.	1.323.327	Hydraulic hose (400mm) 1SNDN6-400	2011→	2	2
5.	1.314.510	Fitting - 90deg. EVW 8 PL	→2010	2	3
6.	013.268.0	Block	→2016	1	1
7.	1.309.604	Plate	→2010	1	-
8.	994.610.0	Console	→2010	1	1
9.	905.875.0	Hydraulic kit for LEXION 500 series		1	1
10.	683.725.0	Cover -LEXION 500+		1	1
11.	683.721.1	Socket		1	1
12.	73612000066	Low nut - M12 - DIN936		1	1
13.	213.607.0	Plug		2	2
14.	683.722.1	Stud-bolt		1	1
15.	1.351.922	Support	→2010	1	1
15.	1.378.528	Support	2011→	1	1
16.	1.372.373	Hydraulic valve		1	-
17.	1.319.233	Hydraulic hose (315mm) 1SNDN6-315	→2010	2	2
18.	1.353.195	Hydraulic hose (1200mm) 1SNDN6-1200	→2010	-	2
19.	1.372.374	Hydraulic valve		-	1
20.	1.314.514	Hydraulic hose (365mm) 1SNDN6-365	2011→	1	2
21.	1.351.402	Hydraulic hose (475mm) 1SNDN6-475	2011→	1	2
-	1.372.358	Hydraulic multi-coupler kit Lexion 400		1	-
-	1.372.357	Hydraulic multi-coupler kit Lexion 400		-	1
-	1.372.356	Hydraulic multi-coupler kit Lexion 500 +		1	-
-	1.372.355	Hydraulic multi-coupler kit Lexion 500 +		-	1
-	1.372.703	Multicoupler Assy: LEXION 500+ Rigid, Hydraulic SPA - B6758 (items 2,4,10-16,20,21 and item 9 on page 26)		1	-
-	1.372.704	Multicoupler: LEXION 500+ Folding, Hydraulic SPA - B6759 (items 2,4,10-15,19-21 and item 9 on page 26)		-	1

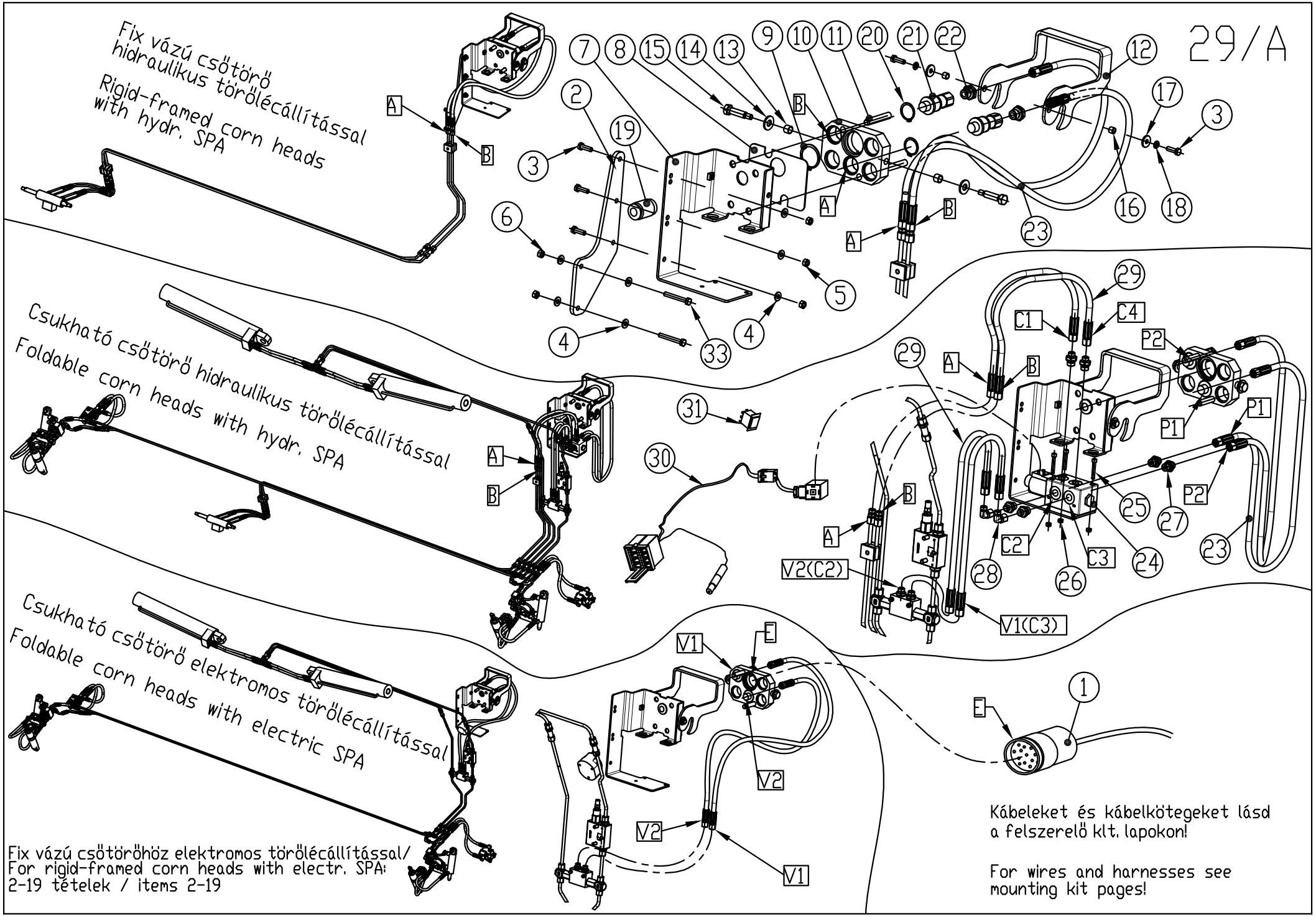

Fix vázú csötörőhöz elektromos törölécállítással/
For rigid-framed corn heads with electr. SPA:
2-19 tételek / items 2-19

Kábeleket és kábelkötegeket lásd
a felszerelő klt. lapokon!

For wires and harnesses see
mounting kit pages!

HYDRAULIC MULTI-COUPLER KIT: JD

Ref.	Part Number	Description		RIGID with hydr. SPA	RIGID with electr. SPA	FOLDING with hydr. SPA	FOLDING with electr. SPA
1.	See mounting kit pages	Harness					
2.	1.355.489	Support plate		1	1	1	1
3.	79408002566	Hex bolt M8x25 - DIN933/8.8		5	5	5	5
4.	91623938761	Spring washer		7	7	7	7
5.	73508000066	Hex nut M8 - DIN934		3	3	3	3
6.	70808000026	Rivet nut M8	→2019	2	2	2	2
6.	70708000066	Lock nut M8 - DIN 980/8.8	2020→	2	2	2	2
7.	1.379.398	Bracket		1	1	1	1
8.	1.353.553	Pad H201010		1	1	1	1
9.	70200004561	Retaining ring - external 45x1.6 - DIN471		1	1	1	1
10.	1.327.000	Support - JD		1	1	1	1
11.	1.327.003	Pin		2	2	2	2
12.	1.354.106	Arm		1	1	1	1
13.	1.327.002	Ring		2	2	2	2
14.	1.377.251	Washer		2	2	2	2
15.	1.327.001	Bolt		2	2	2	2
16.	1.354.107	Spacer		2	2	2	2
17.	1.314.099	Washer		2	2	2	2
18.	72208000060	Spring washer M8 - DIN128/A		2	2	2	2
19.	1.353.552	Plug H176288		1	1	1	1
20.	1.327.052	Retaining ring - external 32x1.5 - DIN471		2	-	2	2
21.	1.327.054	Hydraulic quick-coupler		2	-	2	2
22.	1.327.053	Fitting M14x1.5/UNF 3/4-16		2	-	2	2
23.	1.353.195	Hydraulic hose 1SNDN6-1200		2	-	2	2
24.	1.379.394	Directional valve LC 6/2		-	-	1	-
25.	80206004066	Hex socket head cap bolt M6x40 DIN912/8.8		-	-	3	-
26.	74906000066	Hex nut - plastic insert M6 - DIN985		-	-	3	-
27.	1.353.318	Fitting - M14X1.5 /G3/8		-	-	6	-
28.	1.314.510	Fitting - 90deg. EVW 8 PL		-	-	2	-
29.	1.331.795	Hydraulic hose 1SNDN6-630		-	-	4	-
30.	1.353.204	Harness		-	-	1	-
31.	1.353.213	Switch 6FH 007 832-121 HELLA		-	-	1	-
32.	1.379.399	Holder assy (item 3,7,12,16,17,18)		1	1	1	1
33.	79308012066	Hex bolt M8x120 - DIN931/10.9	2020→	2	2	2	2
-	1.379.472	Directional valve assy (24 - 31)		-	-	1	-
-	1.379.474	Hydraulic multipoint kit. (items 2,6,8 - 11,13 -15,19 - 22,32)		1		1	1
-	1.356.471	Electric multi connection (items 2 - 6,8 - 11,13 - 15,19,32)		-	1	-	-
-	1.372.701	Multicoupler: JD rigid hydraulic- B6755 (items 2,6,8 - 11,13 - 15, 19 - 23,32 and item 12 on page 27/A)		1	-	-	-
-	1.372.702	Multicoupler: JD folding hydraulic- B6757 (items 2,6,8 - 11,13 - 15, 19 - 32 and item 12 on page 27/A)		-	-	1	-

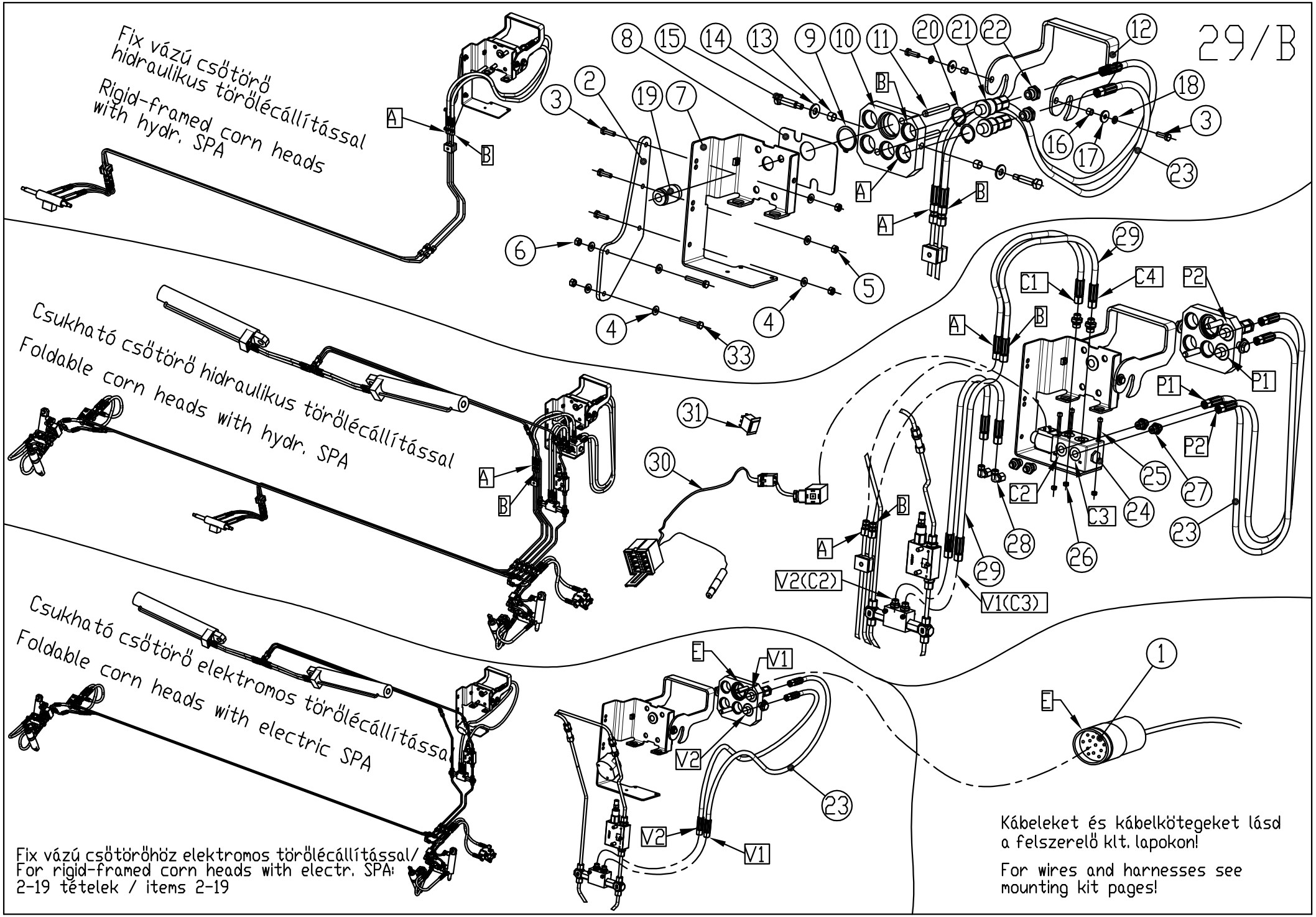

Fix vázú csötörőhöz elektromos törölécállítással/
For rigid-framed corn heads with electr. SPA:
2-19 tételek / items 2-19

Kábeleket és kábelkötegeket lásd
a felszerelő klt. lapokon!

For wires and harnesses see
mounting kit pages!

HYDRAULIC MULTI-COUPLER KIT: AGCO

Ref.	Part Number	Description		RIGID with hydr. SPA	RIGID with electr. SPA	FOLDING with hydr. SPA	FOLDING with electr. SPA
1.	See mounting kit pages	Harness					
2.	1.355.489	Support plate		1	1	1	1
3.	79408002566	Hex bolt M8x25 - DIN933/8.8		5	5	5	5
4.	91623938761	Spring washer		7	7	7	7
5.	73508000066	Hex nut M8 - DIN934		3	3	3	3
6.	70808000026	Rivet nut M8	→2019	2	2	2	2
6.	70708000066	Lock nut M8 - DIN 980/8.8	2020→	2	2	2	2
7.	1.379.398	Bracket		1	1	1	1
8.	1.353.553	Pad H201010		1	1	1	1
9.	70200004561	Retaining ring - external 45x1.6 - DIN471		1	1	1	1
10.	1.356.060	Support - JD		1	1	1	1
11.	1.327.003	Pin		2	2	2	2
12.	1.354.106	Arm		1	1	1	1
13.	1.327.002	Ring		2	2	2	2
14.	1.377.251	Washer		2	2	2	2
15.	1.327.001	Bolt		2	2	2	2
16.	1.354.107	Spacer		2	2	2	2
17.	1.314.099	Washer		2	2	2	2
18.	72208000060	Spring washer M8 - DIN128/A		2	2	2	2
19.	1.353.552	Plug H176288		1	1	1	1
20.	1.327.052	Retaining ring - external 32x1.5 - DIN471		2	-	2	2
21.	1.327.054	Hydraulic quick-coupler		2	-	2	2
22.	1.327.053	Fitting M14x1.5/UNF 3/4-16		2	-	2	2
23.	1.353.195	Hydraulic hose 1SNDN6-1200		2	-	2	2
24.	1.379.394	Directional valve LC 6/2		-	-	1	-
25.	80206004066	Hex socket head cap bolt M6x40 DIN912/8.8		-	-	3	-
26.	74906000066	Hex nut - plastic insert M6 - DIN985		-	-	3	-
27.	1.353.318	Fitting - M14X1.5 /G3/8		-	-	6	-
28.	1.314.510	Fitting - 90deg. EVW 8 PL		-	-	2	-
29.	1.331.795	Hydraulic hose 1SNDN6-630		-	-	4	-
30.	1.353.204	Harness		-	-	1	-
31.	1.353.213	Switch 6FH 007 832-121 HELLA		-	-	1	-
32.	1.379.399	Holder assy (item 3,7,12,16,17,18)		1	1	1	1
33.	79308012066	Hex bolt M8x120 - DIN931/10.9	2020→	2	2	2	2
-	1.379.472	Directional valve assy (24-31)		-	-	1	-
-	1.379.473	Hydraulic multipoint kit. (items 2,6,8,9,10,11,13,14,15,19,20,21,22,32)		1	-	1	1
-	1.379.540	Electric multi connection (items 2,3,4,5,6,8,9,10,11,13,14,15,19,32)		-	1	-	-
-	1.372.698	Multicoupler: AGCO rigid hydraulic /folding electric- B6752 (items 2,6,8 - 11,13 - 15,19 - 23,32 and item 13 on page 37)		1	-	-	1
-	1.372.699	Multicoupler: AGCO rigid electric- B6753 (items 2 - 6,8 - 11, 13 - 15,19,32 and item 13 on page 37)		-	1	-	-
-	1.372.700	Multicoupler: AGCO folding hydraulic - B6754. (items 2,6, 8 - 11,13 - 15,19 - 32 and item 13 on page 37)		-	-	1	-

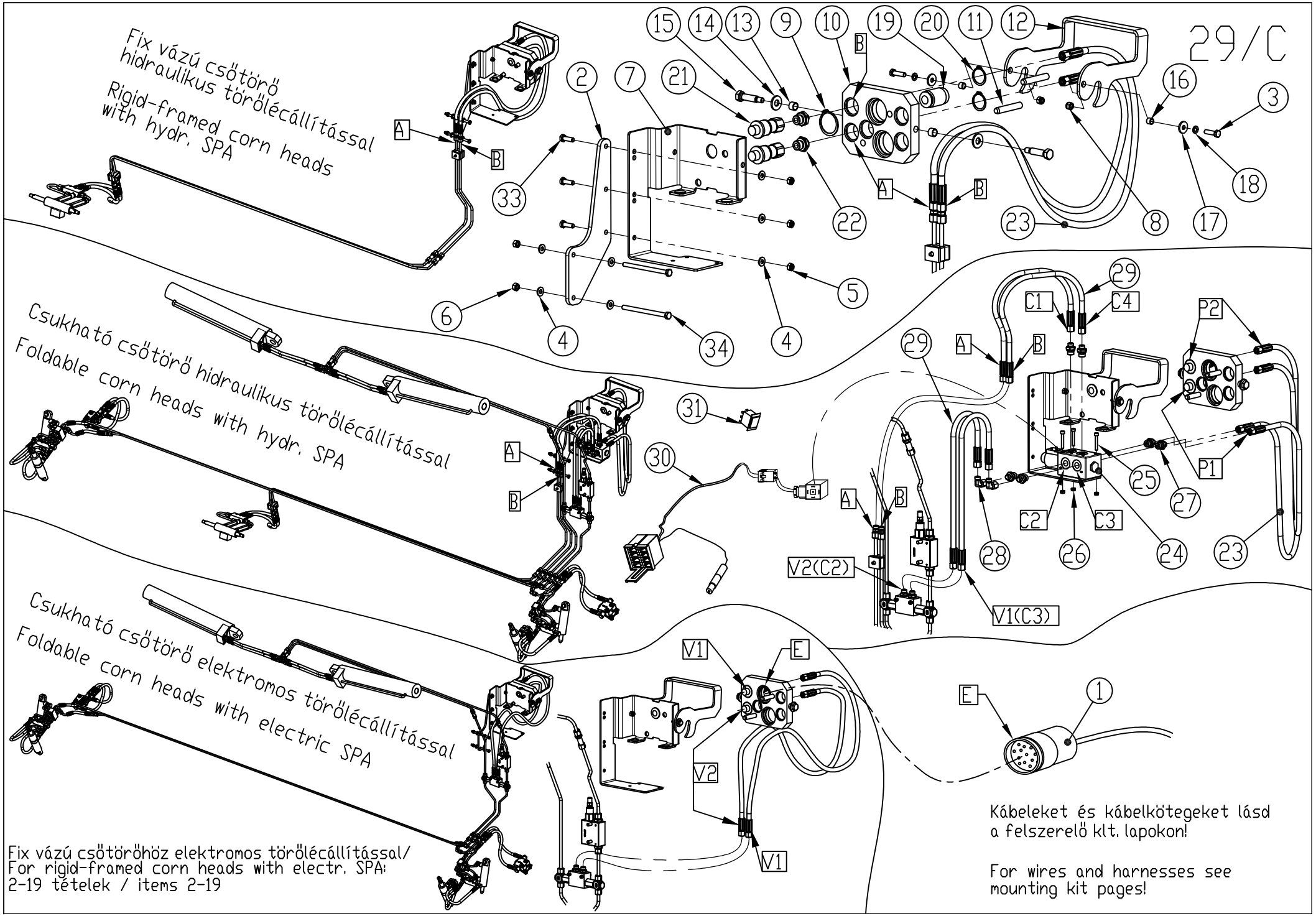
Fix vázú csötörő
hidraulikus törölécállítással
Rigid-framed corn heads
with hydr. SPA
Csukható csötörő hidraulikus törölécállítással
Foldable corn heads with hydr. SPA
Csukható csötörő elektromos törölécállítással
Foldable corn heads with electric SPA
Fix vázú csötörőhöz elektromos törölécállítással/
For rigid-framed corn heads with electr. SPA:
2-19 tételek / items 2-19
Kábeleket és kábelkötegeket lásd
a felszerelő klt. lapokon!
For wires and harnesses see
mounting kit pages!
A
B
C1
C2
C3
C4
E
P1
P2
V1
V2
V1(C3)
V2(C2)

HYDRAULIC MULTI-COUPLER KIT: IDEAL

Ref.	Part Number	Description	RIGID with hydr. SPA	RIGID with electr. SPA	FOLDING with hydr. SPA	FOLDING with electr. SPA
1.	See mounting kit pages	Harness				
2.	1.355.489	Support plate	1	1	1	1
3.	79408003066	Hex bolt M8x30 - DIN933/8.8	2	2	2	2
4.	91623938761	Spring washer	7	7	7	7
5.	73508000066	Hex nut M8 - DIN934	3	3	3	3
6.	70708000066	Lock nut M8 - DIN 980/8.8	2	2	2	2
7.	1.372.632	Bracket	1	1	1	1
8.	74900800066	Hex nut - plastic insert M8 - DIN982	2	2	2	2
9.	70200004561	Retaining ring - external 45x1.6 - DIN471	1	1	1	1
10.	1.372.609	Support - JD	1	1	1	1
11.	1.327.003	Pin	2	2	2	2
12.	1.372.631	Arm	1	1	1	1
13.	1.327.002	Ring	2	2	2	2
14.	1.377.251	Washer	2	2	2	2
15.	1.327.001	Bolt	2	2	2	2
16.	1.354.107	Spacer	2	2	2	2
17.	1.314.099	Washer	2	2	2	2
18.	72208000060	Spring washer M8 - DIN128/A	2	2	2	2
19.	1.353.552	Plug H176288	1	1	1	1
20.	1.327.052	Retaining ring - external 32x1.5 - DIN471	2	-	2	2
21.	1.327.054	Hydraulic quick-coupler	2	-	2	2
22.	1.327.053	Fitting M14x1.5/UNF 3/4-16	2	-	2	2
23.	1.353.195	Hydraulic hose 1SNDN6-1200	2	-	2	2
24.	1.379.394	Directional valve LC 6/2	-	-	1	-
25.	80206004066	Hex socket head cap bolt M6x40 DIN912/8.8	-	-	3	-
26.	74906000066	Hex nut - plastic insert M6 - DIN985	-	-	3	-
27.	1.353.318	Fitting - M14X1.5 /G3/8	-	-	6	-
28.	1.314.510	Fitting - 90deg. EVW 8 PL	-	-	2	-
29.	1.331.795	Hydraulic hose 1SNDN6-630	-	-	4	-
30.	1.353.204	Harness	-	-	1	-
31.	1.353.213	Switch 6FH 007 832-121 HELLA	-	-	1	-
32.	1.372.630	Holder assy (item 3,7,8,12,16,17,18)	1	1	1	1
33.	79408002566	Hex bolt M8x25 - DIN933/8.8	3	3	3	3
34.	79308012066	Hex bolt M8x120 - DIN931/10.9	2	2	2	2
-	1.379.472	Directional valve assy (24-31)	-	-	1	-
-	1.372.646	Hydraulic multipoint kit. (items 2,6,8,9,10,11,13,14,15,19,20,21,22,32)	1	-	1	1
-	1.372.647	Electric multi connection (items 2,4,5,6,9,10,11,13,14,15,19,32)	-	1	-	1
-	1.372.818	Multicoupler: IDEAL rigid elektric /folding electric (items 2,4-6,9 - 11,13 - 15,19 - 22,32 and item 18 on page 71)	-	1	-	1
-	1.372.819	Multicoupler: IDEAL rigid hydraulic (items 2, 6, 8 - 11,13 - 15,19 - 22, 23, 32 and item 18 on page 71)	1	-	-	-
-	1.372.820	Multicoupler: IDEAL folding hydraulic (items 2,6, 9 - 11,13 - 15,19 - 32 and item 18 on page 71)	-	-	1	-

Lubrication table			
#	type	period	qty.
1	EP NLGI Grade 2*	250 [h]	look at operator's manual
2	EP-00 grease	250 [h]	5,5 [pounds] 2,5 [kg]
3	EP NLGI Grade 2*	250 [h]	look at operator's manual
4	EP NLGI Grade 2* alt.: Gearbox oil	250 [h]	look at operator's manual
5	EP NLGI Grade 2*	50 [h]	look at operator's manual
6	EP NLGI Grade 2*	250 [h]	look at operator's manual
7	EP NLGI Grade 2*	250 [h]	look at operator's manual
8	Gearbox oil	50 [h]	look at operator's manual
9	Gearbox oil	10 [h]	look at operator's manual
10	SAE 80W-140**	50 [h]	10,15 [fl.oz.] 0,3 [l]
11	SAE 80W-140**	250 [h]	30,45 [fl.oz.] 0,9 [l]

*high temperature, 1% max molybdenum disulphide, lithium base
**SAE 85W-140 can be used as an alternative

1

15

16

17

24

3

18

Lubrication table			
#	type	period	qty.
1	EP NLGI Grade 2*	250 [h]	look at operator's manual
2	EP NLGI Grade 2*	50 [h]	look at operator's manual

*high temperature, 1% max molybdenum disulphide, lithium base

19

3

4

5

6

7

8

9

10

11

12

13

22

23

2

14

20

21

WARNING DECALS

Ref.	Part Number	Description		6R, 8R models	12R, 16R models	4+2R, 4+2x2R models	6+2x3R models
1.	1.377.253	Lubricating label		1	1	1	1
2.	1.326.707	Warning label		-	-	2	2
3.	1.315.590	Warning label	→2019	2	2	2	2
4.	1.315.438	Warning label		2	2	2	2
5.	1.315.439	Warning label		2	2	2	2
6.	1.315.440	Warning label		2	2	2	2
7.	1.326.700	Warning label		2	2	2	2
8.	1.326.701	Warning label		2	2	2	2
9.	1.326.702	Warning label		2	2	2	2
10.	1.326.703	Warning label		2	2	2	2
11.	1.326.704	Warning label		2	2	2	2
11.	1.379.142	Warning label	2013→	2	2	2	2
12.	1.326.705	Warning label		2	2	2	2
13.	1.326.706	Warning label		2	2	2	2
13.	1.379.143	Warning label	2013→	2	2	2	2
14.	1.308.786	Warning label	→2019	-	-	1	1
14.	1.372.916	Warning label	2020→	-	-	1	1
15.	1.377.288	"Linamar" label		2	2	2	2
16.	1.377.275	"OROS" label		2	2	2	2
17.	1.377.274	"CORNADO" label		3	3	3	3
18.	1.332.251	Warning label - trailer	2013→	1	1	1	1
19.	1.372.889	Lubricating label	2020→	-	-	1	1
20.	1.372.890	Tie-down point label	2020→	2	2	2	2
21.	514.038.0	Lifting bar sticker		2	4	2	4
22.	1.372.836	Warning label	2020→	2	2	2	2
23.	1.372.837	Warning label	2020→	2	2	2	2
24.	1.373.044	Chopper knife cover label		1	1	1	1

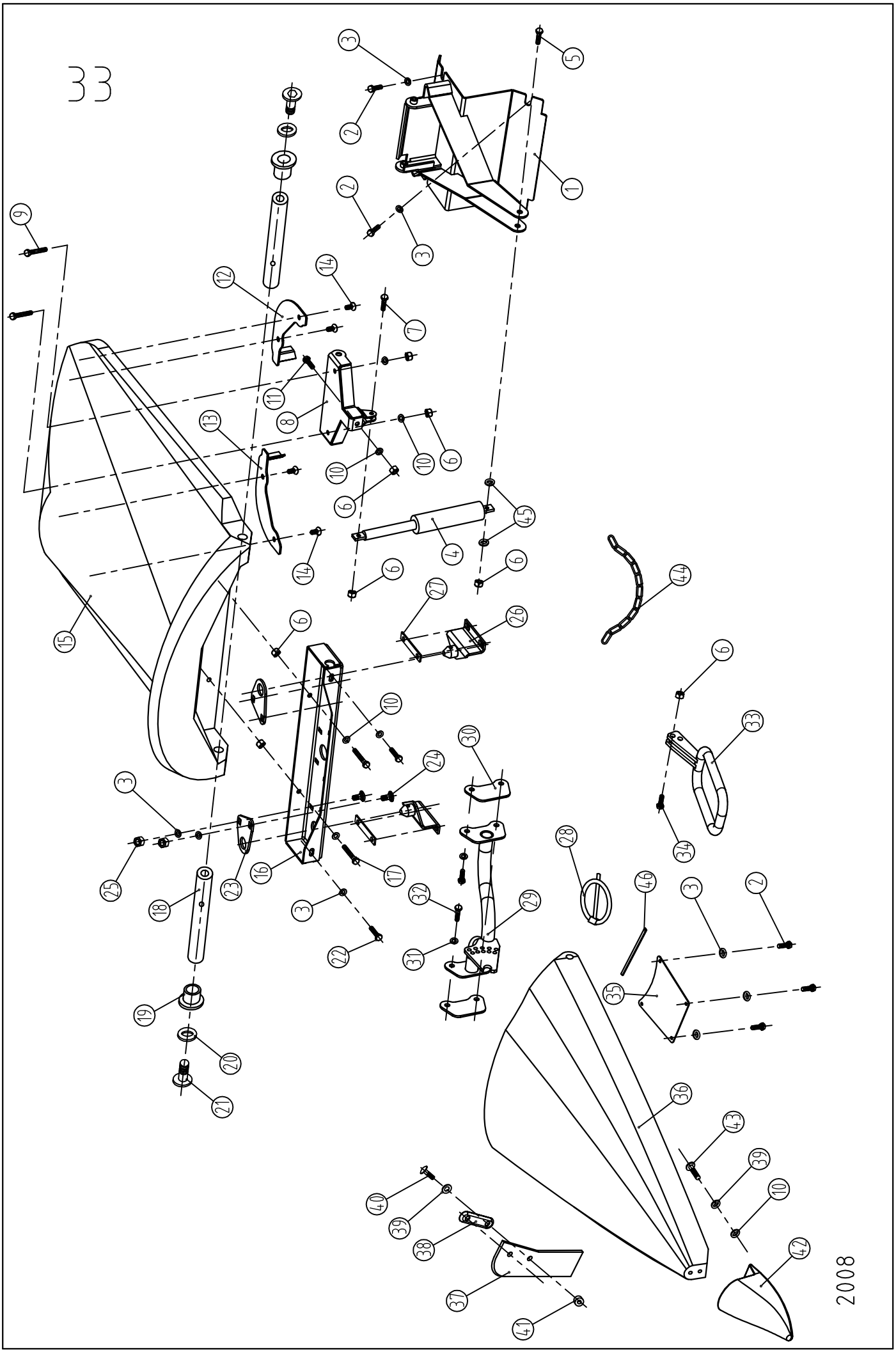
33
2008

PLASTIC CENTRAL DIVIDERS - (70cm~28") -> 2010

Ref.	Part Number	Description	6R	8R	12R	4+2R	4+2x2R	5+2x2R	6+2x3R
1.	1.377.229	Bracket	5	7	11	3	5	6	9
2.	79408002066	Hex bolt M8x20 - DIN933/8.8	40	56	88	24	40	48	72
3.	91623938761	Spring washer	70	98	154	42	70	84	126
4.	1.376.793	Gas spring	5	7	11	3	5	6	9
5.	79408004566	Hex bolt M8x45 - DIN933/8.8	5	7	11	3	5	6	9
6.	70708000066	Lock nut	40	56	88	24	40	48	72
7.	79408002566	Hex bolt M8x25 - DIN933/8.8	5	7	11	3	5	6	9
8.	1.377.225	Bracket	5	7	11	3	5	6	9
9.	79408004066	Hex bolt M8x40 - DIN933/8.8	10	14	22	6	10	12	18
10.	1.314.099	Washer	30	42	66	18	30	36	54
11.	79408006066	Hex bolt M8x60 - DIN933/8.8	5	7	11	3	5	6	9
12.	1.376.129	Cleaning plate - LH	5	7	11	3	5	6	9
13.	1.376.130	Cleaning plate - RH	5	7	11	3	5	6	9
14.	80400802063	Hex socket countersunk-head bolt M8x20 - DIN7991/10.9	20	28	44	12	20	24	36
15.	1.376.100	Rear divider	5	7	11	3	5	6	9
16.	1.377.219	Support assy	5	7	11	3	5	6	9
17.	79308005566	Hex bolt M8x55 - DIN931/8.8	10	14	22	6	10	12	18
18.	1.353.461	Shaft	10	14	22	6	10	12	18
19.	1.353.462	Spacer	10	14	22	6	10	12	18
20.	91623938961	Spring washer	10	14	22	6	10	12	18
21.	78212003563	Hex socket button-head torx bolt M12x35 - ISO 7380/10.9	10	14	22	6	10	12	18
22.	79308004066	Hex bolt M8x40 - DIN931/8.8	10	14	22	6	10	12	18
23.	1.354.571	Plate	10	14	22	6	10	12	18
24.	76308002566	Carriage bolt M8x25 - DIN603/8.8	20	28	44	12	20	24	36
25.	73508000066	Hex nut M8 - DIN934	20	28	44	12	20	24	36
26.	1.376.089	Support pin	10	14	22	6	10	12	18
27.	1.376.747	Flat	10	14	22	6	10	12	18
28.	967PSF30526	Lynch pin DIN11023	10	14	22	6	10	12	18
29.	1.376.085	Bracket	5	7	11	3	5	6	9
30.	1.375.957	Shim (1mm)	5	7	11	3	5	6	9
30.	1.375.958	Shim (2mm)	5	7	11	3	5	6	9
31.	91623938861	Spring washer	20	28	44	12	20	24	36
32.	79410002566	Hex bolt M10x25 - DIN933/8.8	20	28	44	12	20	24	36
33.	1.328.862	Arm assy	5	7	11	3	5	6	9
34.	79408003066	Hex bolt M8x30 - DIN933/8.8	5	7	11	3	5	6	9
35.	1.354.667	Plate	5	7	11	3	5	6	9
36.	1.376.099	Central snout	5	7	11	3	5	6	9
37.	1.329.163	Rubber earsaver	10	14	22	6	10	12	18
38.	1.329.164	Shim	10	14	22	6	10	12	18
39.	72208000060	Spring washer M8 - DIN 128/A	25	35	55	15	25	30	45
40.	78200802063	Hex socket button-head torx bolt M8x20 - ISO7380/10.9	20	28	44	12	20	24	36
41.	1.329.747	Spacer	20	28	44	12	20	24	36
42.	1.354.310	Skid shoe	5	7	11	3	5	6	9
43.	79308009063	Hex bolt M8x90 - DIN931/10.9	5	7	11	3	5	6	9
44.	1.379.914	Chain 4x32x15.2	-	-	-	-	2	2	4
45.	993.454.0	Bushing	10	14	22	6	10	12	18
46.	96720070601	Rubber protector	5	7	11	3	5	6	9

Note: Application of shims if necessary.

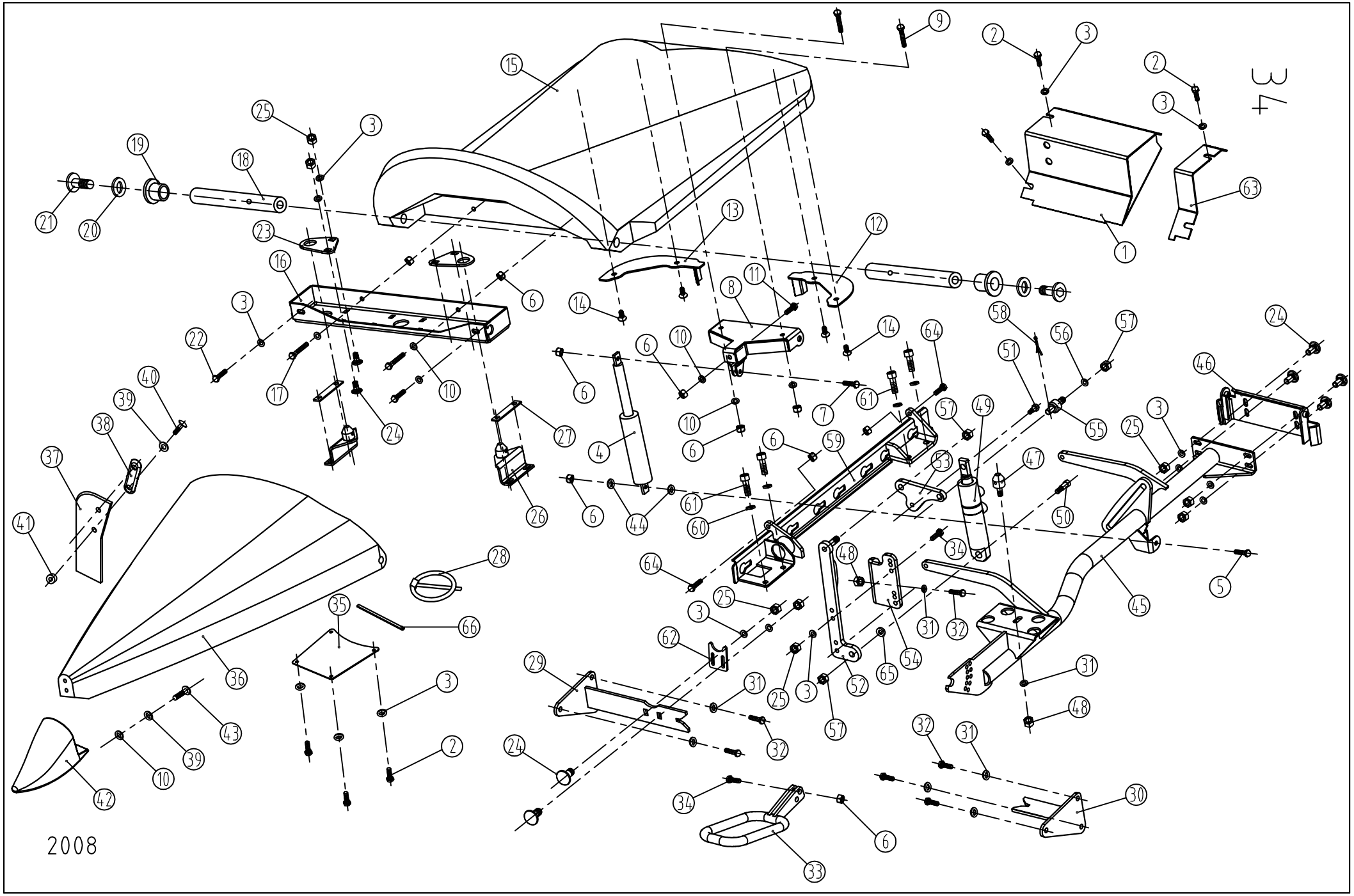
34
2008

PLASTIC HINGED DIVIDERS - 6300 series folding models (70cm~28") -> 2010

Ref.	Part Number	Description	All folding models
1.	1.377.199	Bracket - LH	1
1.	1.377.200	Bracket - RH	1
2.	79408002066	Hex bolt M8x20 - DIN933/8.8	18
3.	91623938761	Spring washer	46
4.	1.376.793	Gas spring	2
5.	79408004566	Hex bolt M8x45 - DIN933/8.8	2
6.	70708000066	Lock nut	20
7.	79408002566	Hex bolt M8x25 - DIN933/8.8	2
8.	1.377.225	Bracket	2
9.	79408004066	Hex bolt M8x40 - DIN933/8.8	4
10.	1.314.099	Washer	12
11.	79408006066	Hex bolt M8x60 - DIN933/8.8	2
12.	1.376.129	Cleaning plate - LH	2
13.	1.376.130	Cleaning plate - RH	2
14.	80400802063	Hex socket countersunk-head bolt M8x20 - DIN7991/10.9	8
15.	1.376.100	Rear divider	2
16.	1.377.219	Support assy	2
17.	79308005566	Hex bolt M8x55 - DIN931/8.8	4
18.	1.353.461	Shaft	4
19.	1.353.462	Spacer	4
20.	91623938961	Spring washer	4
21.	78212003566	Hex socket button-head torx bolt M12x35 - ISO 7380/10.9	4
22.	79308004066	Hex bolt M8x40 - DIN931/8.8	4
23.	1.354.571	Plate	4
24.	76308002566	Carriage bolt M8x25 - DIN603/8.8	20
25.	73508000066	Hex nut M8 - DIN934	24
26.	1.376.089	Support pin	4
27.	1.376.747	Flat	4
28.	967PSF30526	Lynch pin DIN11023	2
29.	1.377.213	Support - LH	1
29.	1.377.214	Support - RH	1
30.	1.377.215	Support - LH	1
30.	1.377.216	Support - RH	1
31.	91623938861	Spring washer	19
32.	79410002566	Hex bolt M10x25 - DIN933/8.8	17
33.	1.328.862	Arm assy	2
34.	79408003066	Hex bolt M8x30 - DIN933/8.8	6
35.	1.354.667	Plate	2
36.	1.376.099	Central snout	2
37.	1.329.163	Rubber earsaver	4
38.	1.329.164	Shim	4
39.	72208000060	Spring washer M8 - DIN 128/A	10
40.	78200802063	Hex socket button-head torx bolt M8x20 - ISO7380/10.9	8
41.	1.329.747	Spacer	8
42.	1.354.310	Skid shoe	2
43.	79308009063	Hex bolt M8x90 - DIN931/10.9	2
44.	993.454.0	Bushing	4
45.	1.377.192	Hinged frame - LH	1
45.	1.377.193	Hinged frame - RH	1
46.	1.377.196	Hinge	2
47.	1.310.009	Support pin	2

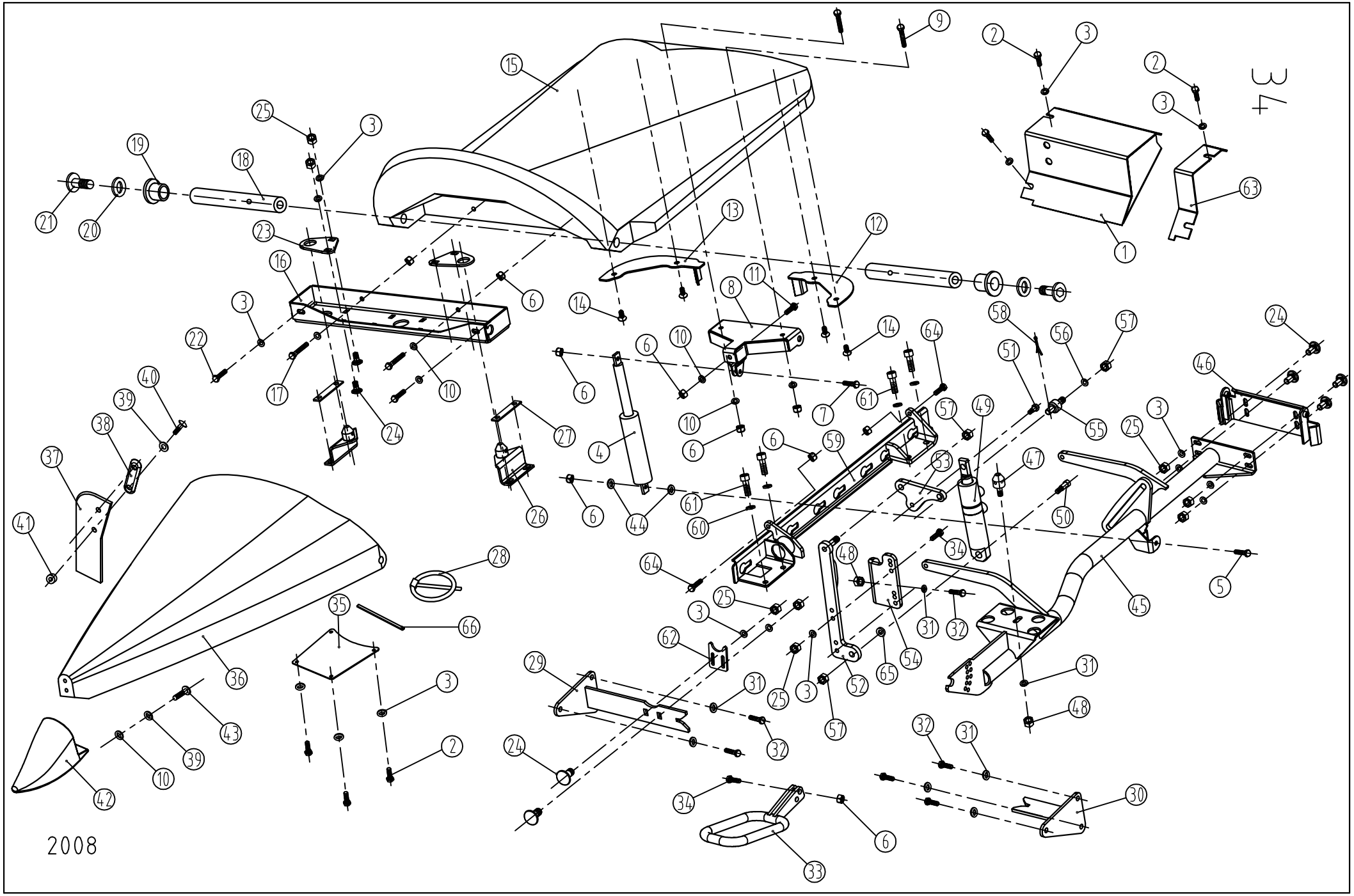
34
2008

PLASTIC HINGED DIVIDERS - 6300 series folding models (70cm~28") -> 2010

Ref.	Part Number	Description	All folding models
48.	73510000066	Hex nut M10 - DIN934	6
49.	1.354.397	Hydraulic cylinder	2
50.	1.354.382	Bolt - M12	2
51.	1.354.381	Bolt - M10	2
52.	1.377.018	Console - LH	1
52.	1.377.013	Console - RH	1
53.	1.377.019	Arm	2
54.	1.377.020	Console - LH	1
54.	1.377.015	Console - RH	1
55.	1.329.744	Tapped shaft	2
56.	71412000060	Washer M12 - DIN125 - 200HV	2
57.	70712000066	Lock nut M12	6
58.	72402502560	Split pin 2.5x25 - DIN94	2
59.	1.376.776	Chain guide - LH	1
59.	1.376.777	Chain guide - RH	1
60.	71810000060	Spring washer M10 - DIN7980	8
61.	80210003063	Hex socket head cap bolt M10x30 - DIN912/10.9	8
62.	1.377.022	Plate	2
63.	1.376.043	Cover plate - LH	1
63.	1.376.044	Cover plate - RH	1
64.	79408003063	Hex bolt M8x30 - DIN933/10.9	4
65.	1.329.746	Spacer	2
66.	96720070601	Rubber protector	2

1.329.165

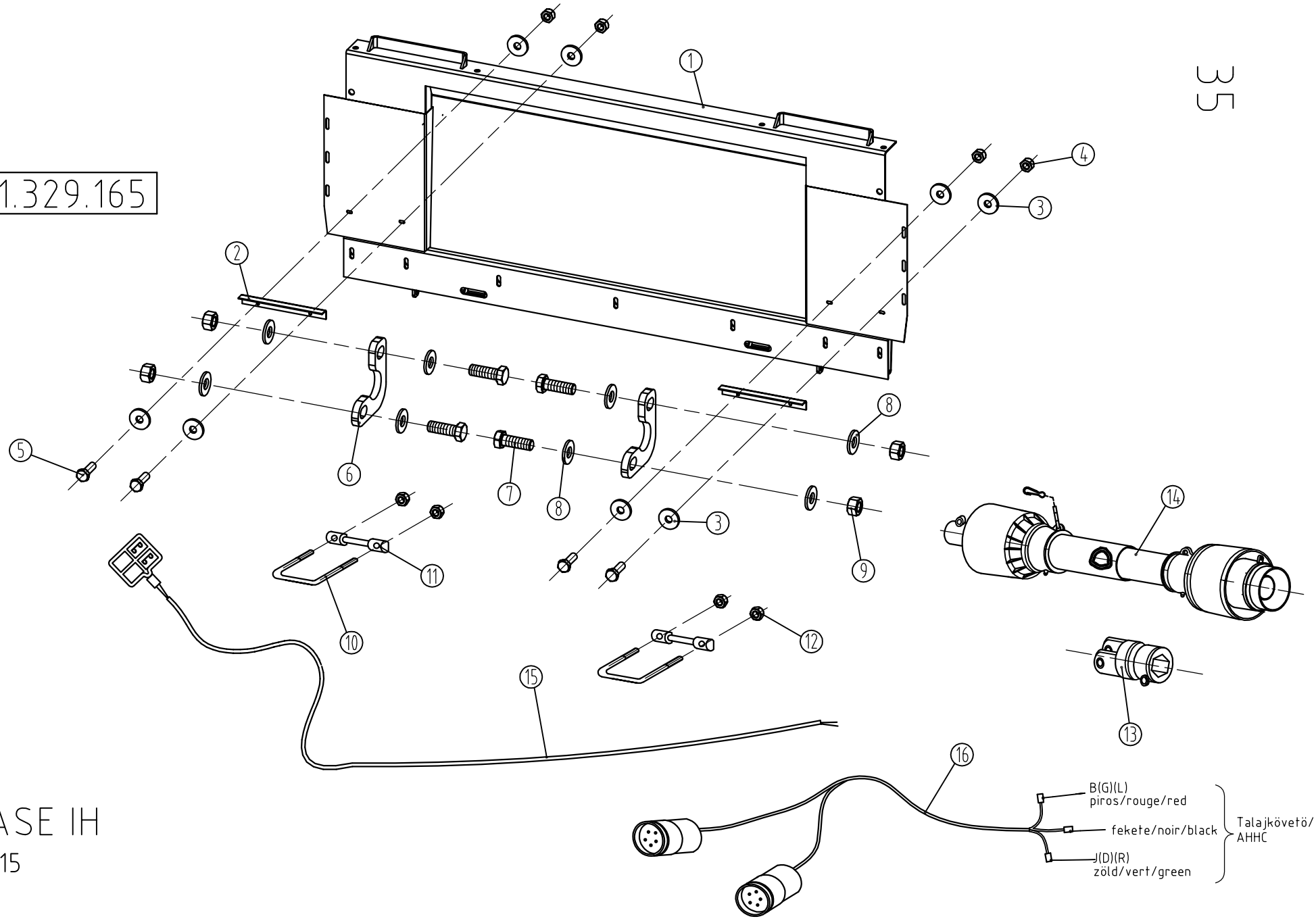

CASE IH

2015

MOUNTING KIT: CASE IH 1600 & 2000 SERIES

Ref.	Part Number	Description		6-8R	12-16R
1.	1.329.166	Frame assy		1	1
2.	1.320.558	Angle		2	2
3.	1.314.099	Washer		8	8
4.	70708000066	Lock nut M8 - DIN980		4	4
5.	79408002566	Hex bolt M8x25 - DIN933/8.8		4	4
6.	1.329.977	Clip plate		2	2
7.	79412003566	Hex bolt M12x35 - DIN933		4	4
8.	91623938961	Spring washer - A12		8	8
9.	73512000066	Hex nut M12 - DN934		4	4
10.	1.301.068	Retainer		2	2
11.	1.301.069	Pin		2	2
12.	70716000066	Lock nut M16 - DIN980		4	4
13.	1.327.664	Yoke - 1.125 hex (P400)		2	2
13.	1.327.487	Yoke - 1.125 hex (P500)	2016-2017.	-	2
14.	-	PTO drive shaft		See page 1!	See page 1!
15.	1.327.638	Wire		1	1
16.	1.379.536	Harness		1	1
-	1.329.165	Mounting kit (items 1,2,3,4,5,6,7,8,9,10,11,12)		1	1
-	1.372.679	Window Frame Completion Bundle (items 1,2,3,4,5,6,7,8,9,10,11,12,15)		1	1

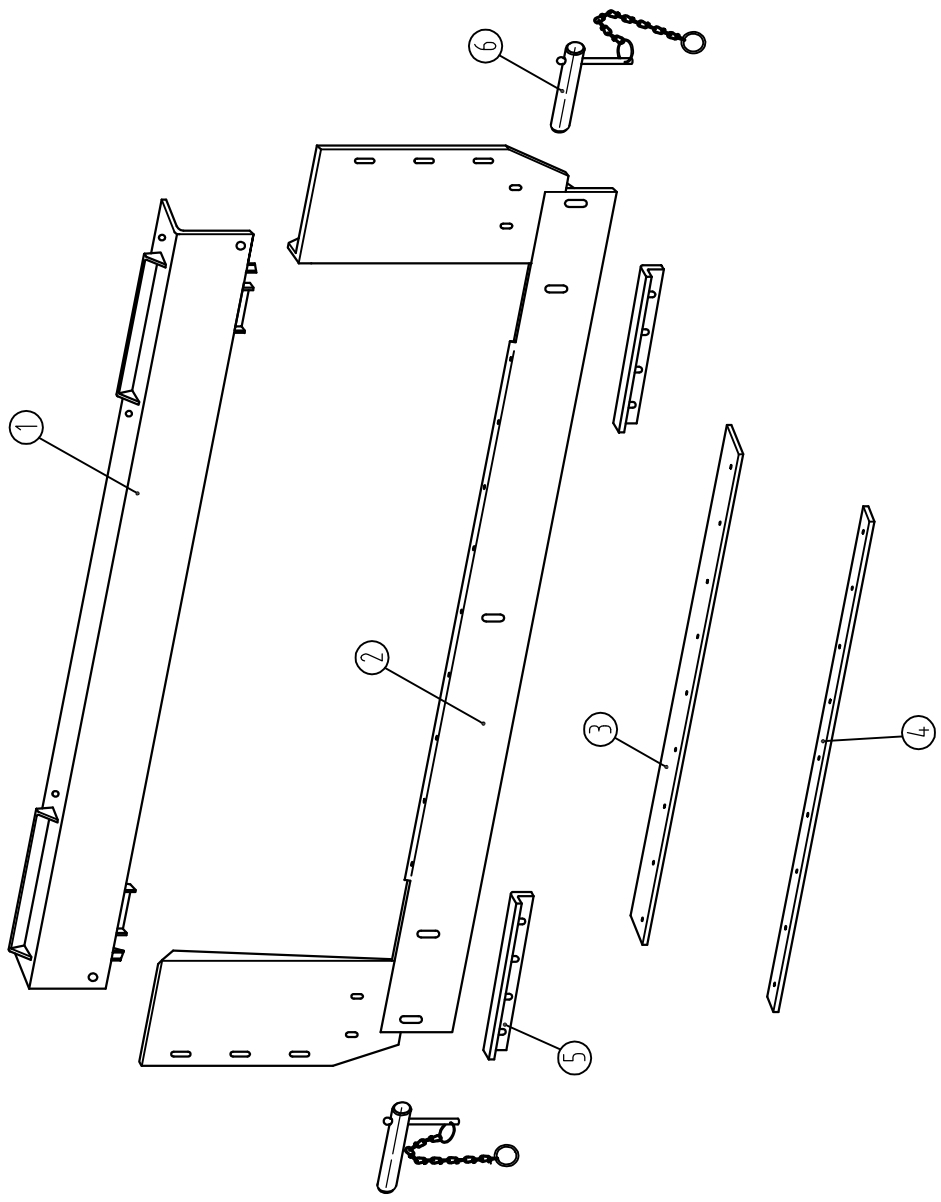

CD, MEGA
2008

MOUNTING KIT: CD, Mega, Medion

Ref.	Part Number	Description		All models
1.	1.320.426	Upper filler		1
2.	1.322.402	Filler welded		1
3.	1.304.802	Rubber plate	→2019	1
3.	1.372.956	Rubber plate	2020→	1
4.	1.304.803	Flat		1
5.	1.322.437	Angle		2
6.	1.320.482	Safety pin		2

Note: for PTO drive shafts see page 1!

1.326.544

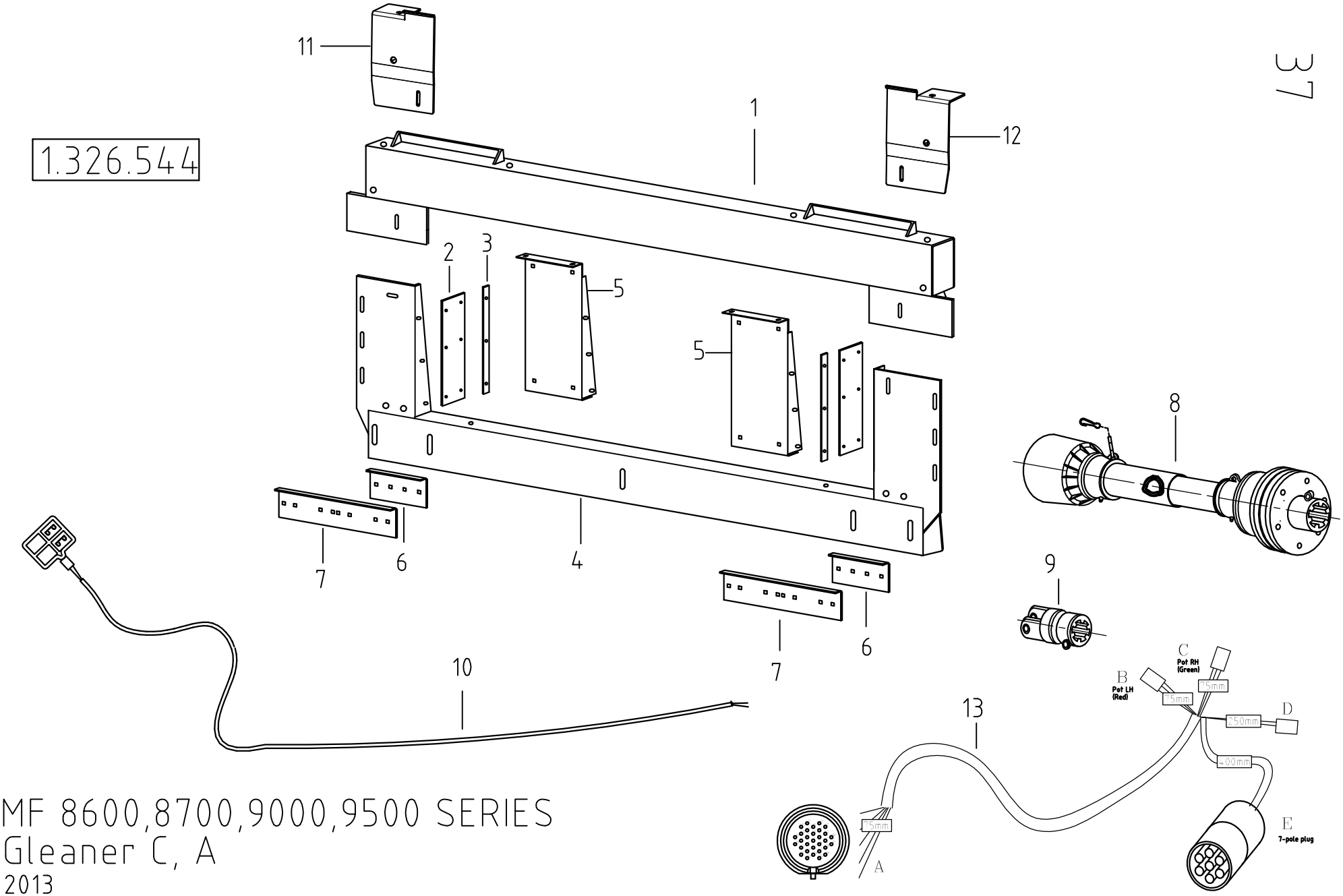

MF 8600,8700,9000,9500 SERIES
Gleaner C, A
2013

MOUNTING KIT: MF 8680, 8780, 9690, 9790, Gleaner C, AGCO EUROPEAN MODELS from 2006 (FENDT,MF,CHALLENGER)

Ref.	Part Number	Description		6-8R	12-16R
1.	1.322.351	Upper filler - without LTM MF 86xx, MF 87xx		1	1
2.	1.328.546	Rubber plate	→2019	2	2
2.	1.372.953	Rubber plate	2020→	2	2
3.	1.320.280	Flat iron		2	2
4.	1.322.329	Lower filler		1	1
5.	71 38 50 03	Inlet MF 8780		2	2
6.	1.322.332	Angle MF 8680, Gleaner C, MF 9690, 9790		2	2
7.	1.322.333	Angle MF 8780,		2	2
8.	-	PTO drive shaft		See page 1!	See page 1!
9.	1.327.662	Yoke - 21spline (P400)		2	2
9.	1.327.486	Yoke - 21spline (P500)	2016-2017.	-	2
10.	1.327.638	Wire		1	1
11.	1.320.277	Guide welded - right - with LTM	→2012	1	
11.	1.332.447	Guide welded - right - with LTM	2013→	1	1
11.	1.332.462	Guide welded - right - with LTM Agco Challenger	2013→	1	1
12.	1.320.276	Guide welded - left - with LTM	→2012	1	
12.	1.332.446	Guide welded - left - with LTM	2013→	1	1
12.	1.332.461	Guide welded - left - with LTM Agco Challenger	2013→	1	1
13.	1.355.966	Harness for AGCO multi-coupler	2009→	1	1
-	1.326.544	Mounting kit (items 2,3,4,5,6,7,11,12)		1	1
-	1.372.682	Window Frame Completion Bundle (items 2,3,4,6,11,12)		1	1

Note for item 10: For those combines which have no multipoint connection.

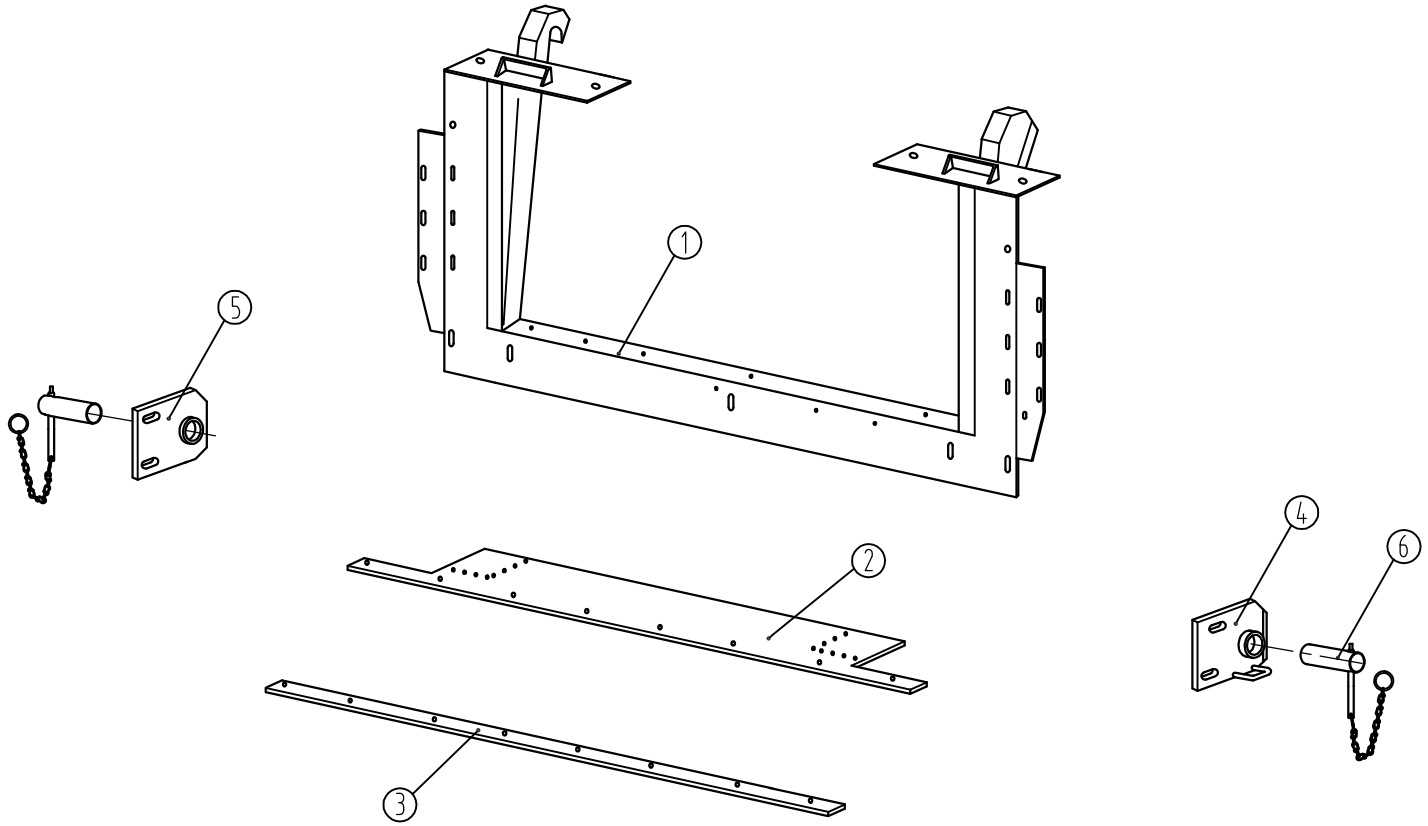

MF 32-40
MF 7274, 7278 pre2006

2008

MOUNTING KIT: MF 32-40

Ref.	Part Number	Description		All models
1.	1.322.406	Filler welded		1
2.	1.320.515	Rubber plate	→2019	1
2.	1.372.957	Rubber plate	2020→	1
3.	1.320.516	Flat iron		1
4.	1.317.726	Fixing plate - LH		1
5.	1.317.750	Fixing plate - RH		1
6.	1.317.719	Safety pin		2

Note: for PTO drive shafts see page 1!

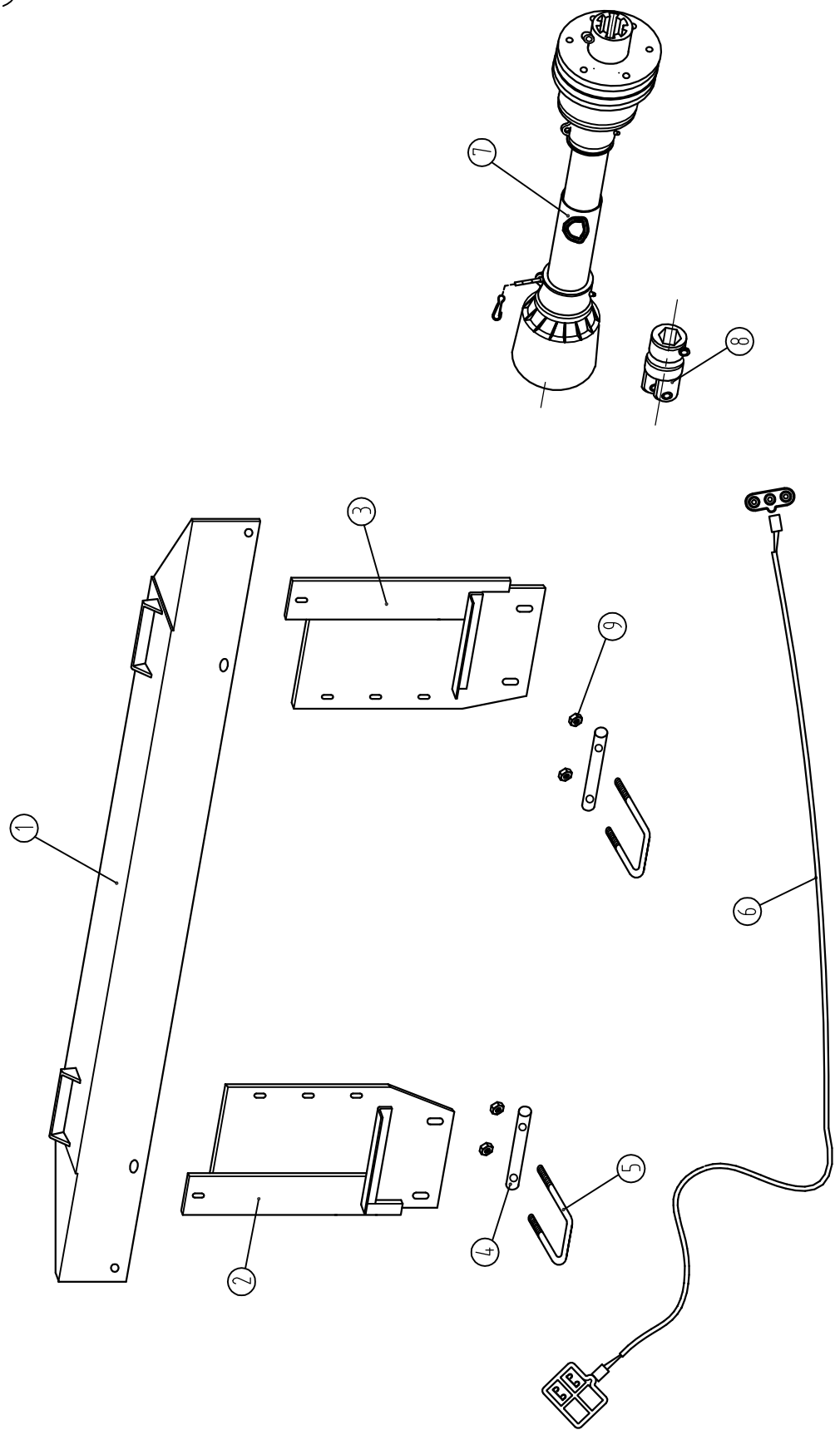

MF 8570
2007

MOUNTING KIT: MF 8570

Ref.	Part Number	Description	6 R	8 R
1.	1.320.291	Upper filler assy.	1	1
2.	1.322.394	Inlet weld. - RH	1	1
3.	1.322.393	Inlet weld. - LH	1	1
4.	1.304.985	Pin	2	2
5.	1.304.143	Retainer	2	2
6.	1.320.275	Wire	1	1
7.	-	PTO drive shaft (See page 1!)		
8.	1.353.755	Yoke - 1.26 hex (P400)	2	2
9.	70716000066	Lock nut M16 - DIN980	4	4

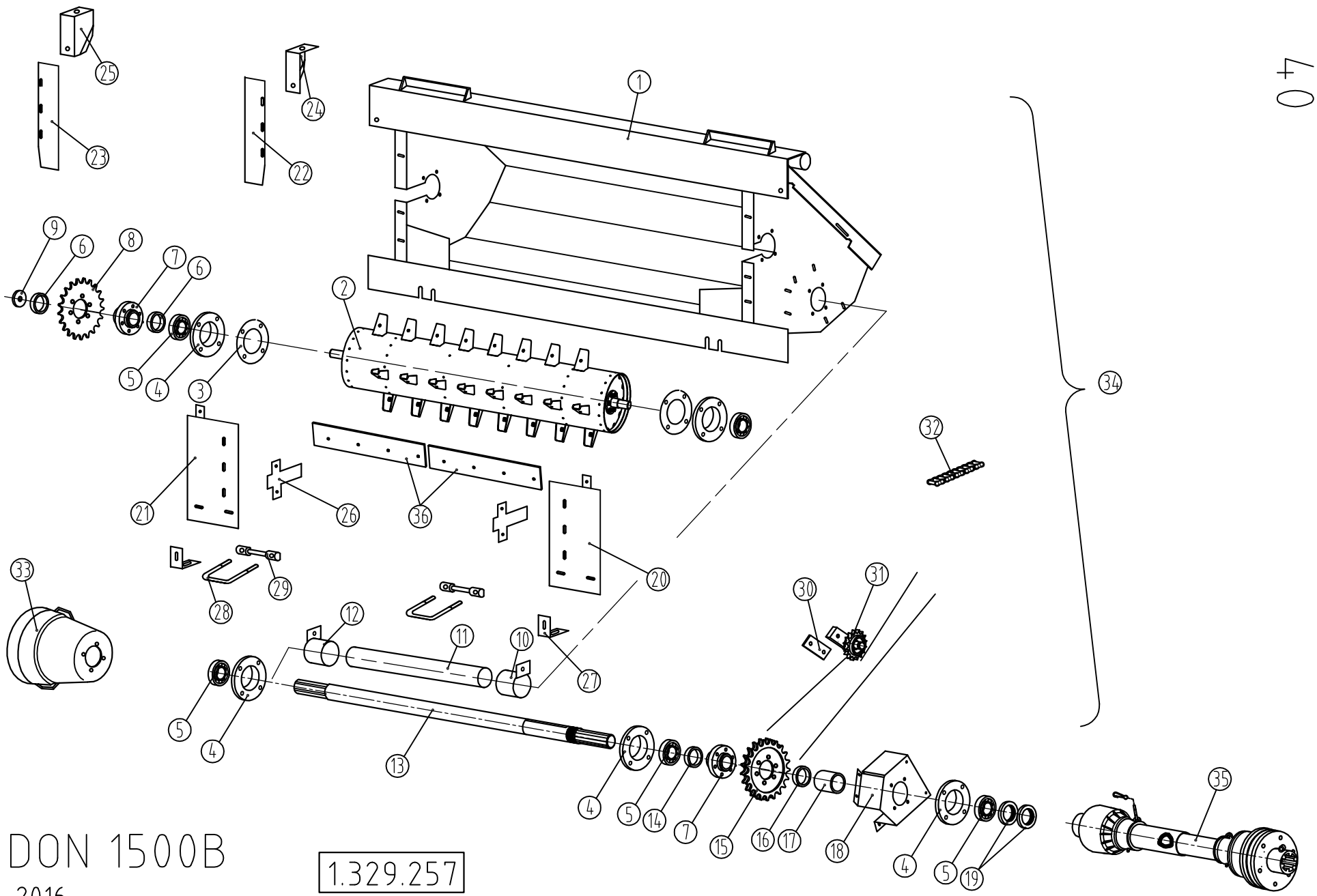

DON 1500B

2016

1.329.257

MOUNTING KIT: DON 1500B

Ref.	Part Number	Description		All models
1.	1.329.258	Frame assy		1
2.	1.329.066	Feeder drum		1
3.	1.329.077	Disk		2
4.	1.314.392	Bearing housing		5
5.	87000004049	Bearing /RAE40 NPPB/		5
6.	1.328.704	Spacer		2
7.	1.320.173	Hub		2
8.	1.320.253	Sprocket (t=1", z=22)		1
9.	1.301.302	Washer		1
10.	1.302.884	Safety tube welded - LH	→2012	1
10.	1.332.476	Safety tube welded	2013→	1
11.	1.302.738	Safety tube PVC		1
12.	1.302.886	Safety tube welded - RH	→2012	1
12.	1.332.476	Safety tube welded	2013→	1
13.	1.329.102	Shaft		1
14.	1.316.247	Spacer		1
15.	1.320.011	Sprocket (t=1", z=21)		1
16.	1.201.329	Shim		5
17.	2.401.765	Spacer		1
18.	1.329.103	Console		1
19.	86700000800	Bearing nut KM8		2
20.	1.329.268	Filler - LH		1
21.	1.329.269	Filler - RH		1
22.	1.329.277	Inset - LH		1
23.	1.329.278	Inset - RH		1
24.	1.329.275	Inlet - LH		1
25.	1.329.276	Inlet - RH		1
26.	1.329.097	Closing plate		2
27.	1.329.274	Angle		2
28.	1.301.068	Retainer		2
29.	1.301.069	Pin		2
30.	1.315.367	Flat		1
31.	1.326.774	Deflector assy (1")		2
32.	1.304.053	Chain		1
33.	1.314.748	Safety cover		2
34.	1.329.257	Mounting kit (items 1-33, 36)		1
35.	-	PTO drive shaft (See page 1 !)		
36.	1.332.848	Rubber plate	2016-2019.	8
36.	1.372.958	Rubber plate	2020→	8

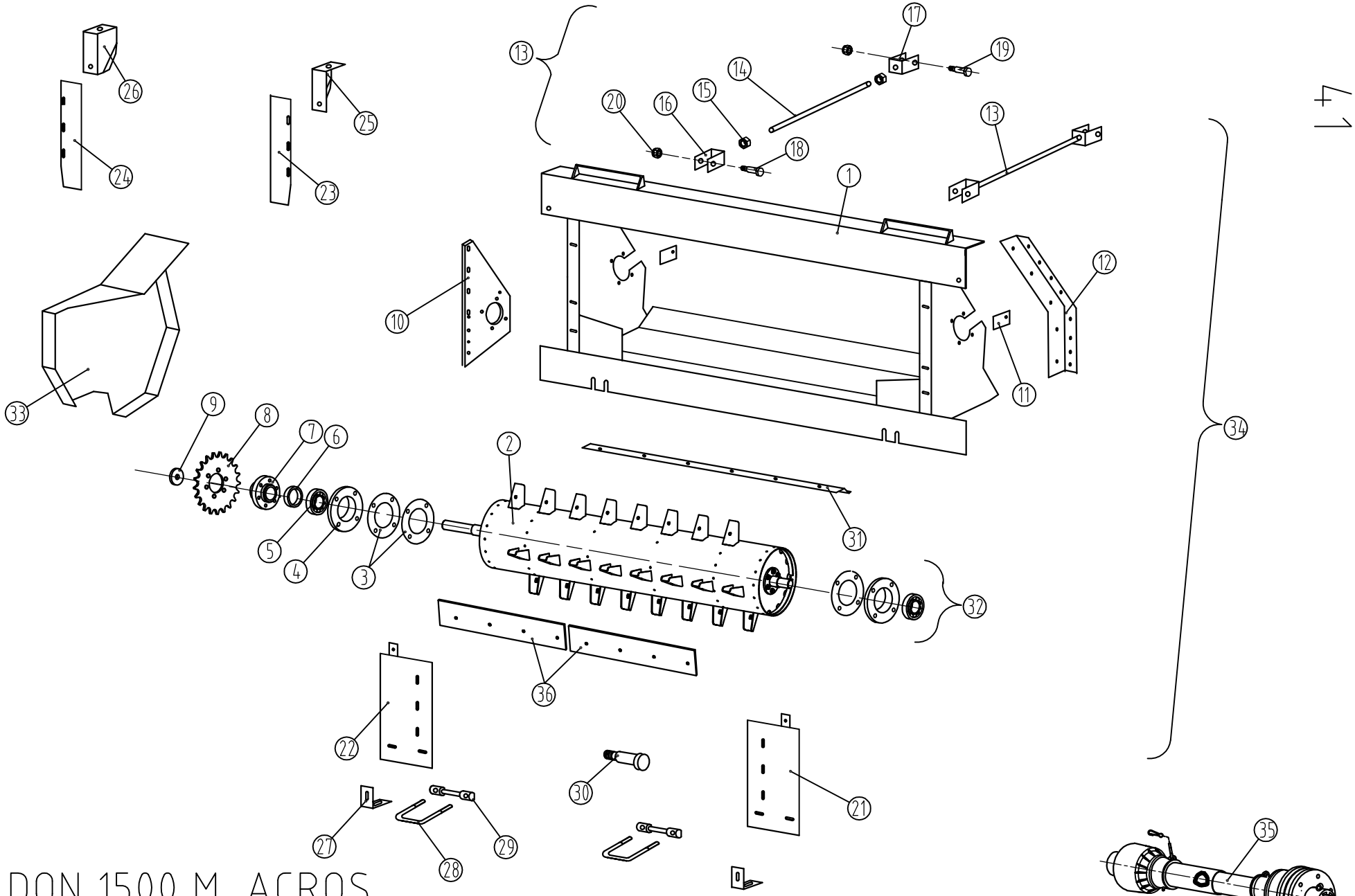

DON 1500 M, ACROS

2016

MOUNTING KIT: DON 1500M, ACROS

Ref.	Part Number	Description		All models
1.	1.329.331	Frame assy		1
2.	1.329.341	Feeder drum		1
3.	1.329.077	Disk		2
3.	1.329.345	Disk		2
4.	1.314.392	Bearing housing		2
5.	87000004049	Bearing /RAE40 NPPB/		2
6.	1.314.407	Spacer		1
6.	1.310.898	Spacer		1
7.	1.320.173	Hub		1
8.	1.329.099	Sprocket (t=3/4", z=35)		1
9.	1.301.302	Washer		1
10.	1.329.344	Console		1
11.	1.329.362	Closing plate		2
12.	1.329.360	Filler - LH		1
12.	1.329.361	Filler - RH		1
13.	1.329.847	Bridge assy (items 14-20)		2
14.	1.329.854	Spindle		2
15.	73524000066	Hex nut M24 - DIN934		4
16.	1.329.848	Fork assy		2
17.	1.329.852	Fork assy		2
18.	1.329.855	Pin		2
19.	1.329.893	Pin		2
20.	74916000066	Hex nut - plastic insert M16 - DIN985		4
21.	1.329.268	Filler - LH		1
22.	1.329.269	Filler - RH		1
23.	1.329.277	Inset - LH		1
24.	1.329.278	Inset - RH		1
25.	1.329.275	Inlet - LH		1
26.	1.329.276	Inlet - RH		1
27.	1.329.274	Angle		2
28.	1.301.068	Retainer		2
29.	1.301.069	Pin		2
30.	1.329.856	Pin		1
31.	1.329.359	Closing plate		1
32.	1.329.332	Feeder drum assy (items 2-10,36)		1
33.	1.329.363	Cover		1
34.	1.329.329	Mounting kit (items 1,11,12,13, 21-33)		1
35.	-	PTO drive shaft (See page 1 !)		
36.	1.332.848	Rubber plate	2016-2019.	8
36.	1.372.958	Rubber plate	2020→	8

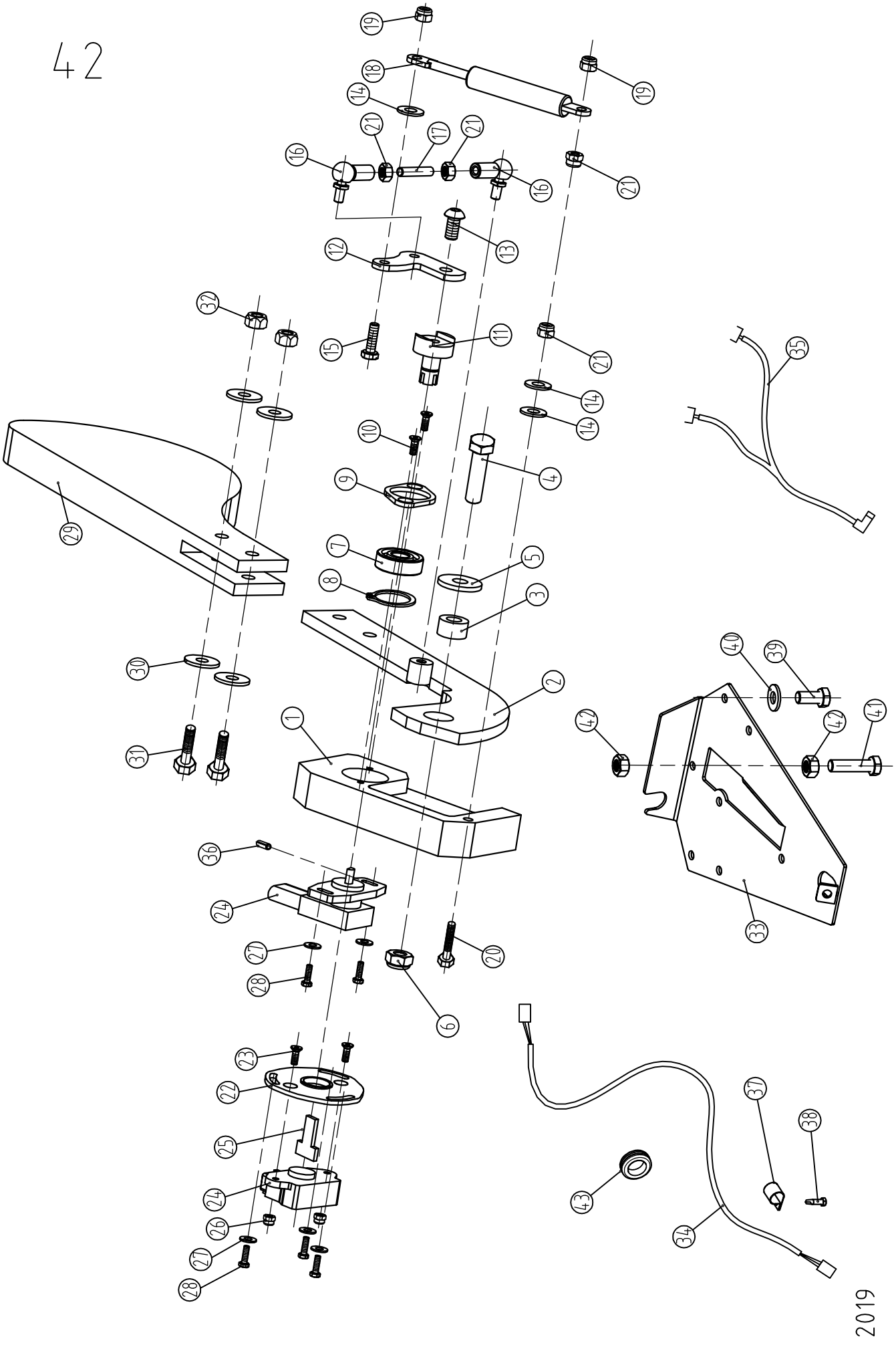
19
18
19
14
21
17
21
16
16
21
13
12
32
15
11
21
35
14
14
10
4
9
29
7
5
8
3
30
2
40
39
1
42
42
41
31
36
24
33
27
20
28
6
23
22
25
24
26
27
28
37
38
43
34
2019

AUTOMATIC HEADER HEIGHT CONTROL

Ref.	Part Number	Description		2 sensors 6-8R 70-76,2cm	2 sensors 8R/96,5 12R/70-76,2	2 sensors 8-12R 50-56cm	2 sensors 6+2x3R, 16R 70-76,2cm	2 sensors 5+2R, 5+2x2R 60cm	3 sensors 5+2R, 5+2x2R 60 cm	3 sensors 8-12R 50-56cm	3 sensors 8R/96,5 8-12R/70-76,2cm	3 sensors 6+2x3R, 16R 70-76,2cm
1.	1.329.455	Block		2	2	2	2	2	3	3	3	3
2.	1.329.462	Arm assy.		2	2	2	2	2	3	3	3	3
3.	1.301.766	Bushing		2	2	2	2	2	3	3	3	3
4.	79410004566	Hex bolt M10x45 - DIN933/8.8		2	2	2	2	2	3	3	3	3
5.	96702375920	Washer - M10		2	2	2	2	2	3	3	3	3
6.	70710000066	Lock nut - M10 - DIN980		2	2	2	2	2	3	3	3	3
7.	87000620114	Bearing - 6201- 2RS		2	2	2	2	2	3	3	3	3
8.	70200001201	Retaining ring - external 12x1 - DIN471		2	2	2	2	2	3	3	3	3
9.	1.329.458	Cover plate		2	2	2	2	2	3	3	3	3
10.	80405001603	Hex socket countersunk-head bolt M5x16 - DIN7991/10.9		4	4	4	4	4	6	6	6	6
11.	1.329.457	Shaft		2	2	2	2	2	3	3	3	3
12.	1.329.459	Arm		2	2	2	2	2	3	3	3	3
13.	81108001663	Hex socket button-head bolt- M8x16 - ISO7380/10.9		2	2	2	2	2	3	3	3	3
14.	71406000060	Washer -M6 - DIN125		6	6	6	6	6	9	9	9	9
15.	79406002066	Hex bolt -M6x20 - DIN933/8.8		2	2	2	2	2	3	3	3	3
16.	97515182510	Globe joint		4	4	4	4	4	6	6	6	6
17.	1.329.539	Rod		2	2	2	2	2	3	3	3	3
18.	96716250085	Gas spring		2	2	2	2	2	3	3	3	3
19.	74906000066	Hex nut - plastic insert -M6 - DIN985		4	4	4	4	4	6	6	6	6
20.	79406005066	Hex bolt -M6x50 - DIN933/8.8		2	2	2	2	2	3	3	3	3
21.	73506000066	Hex nut -M6 DIN934		8	8	8	8	8	12	12	12	12
22.	1.332.078	Plate -CNH	→2014.	2	2	2	2	2	3	3	3	3
22.	1.332.078	Plate - Case 1000-2000		-	-	-	-	-	3	3	3	3
23.	80404001266	Hex socket countersunk-head bolt M4x12 - DIN7991/8.8 - CNH	→2014.	4	4	4	4	4	6	6	6	6
23.	80404001266	Hex socket countersunk-head bolt M4x12 - DIN7991/8.8 - Case 1000-2000		-	-	-	-	-	6	6	6	6
24.	96799585520	Rotation detector - Claas Lexion	→2013.	2	2	2	2	2	3	3	3	3
24.	60042406090	Rotation detector - JD, MF AGCO, CLAAS, CNH 2015.→		2	2	2	2	2	3	3	3	3
24.	91601111000	Rotation detector - CNH	→2014.	2	2	2	2	2	3	3	3	3
24.	91601111000	Rotation detector - Case 1000-2000		-	-	-	-	-	3	3	3	3
25.	1.329.910	Driver for 91601111000 - CNH	→2014.	2	2	2	2	2	3	3	3	3
25.	1.329.910	Driver for 91601111000 - Case 1000-2000		-	-	-	-	-	3	3	3	3
26.	74904000066	Hex nut - plastic insert M4 - DIN985 - CNH	→2014.	4	4	4	4	4	6	6	6	6
26.	74904000066	Hex nut - plastic insert M4 - DIN985 - Case 1000-2000		-	-	-	-	-	6	6	6	6
27.	71404000060	Washer M4 - DIN125		6	6	6	6	6	9	9	9	9
28.	79404001666	Hex bolt M4x16 - DIN933/8.8		6	6	6	6	6	9	9	9	9
29.	1.329.463	Ground contour copier		2	2	2	2	2	3	3	3	3
30.	1.314.099	Washer		8	8	8	8	8	12	12	12	12
31.	79408003566	Hex bolt -M8x35 - DIN933/8.8		4	4	4	4	4	6	6	6	6
32.	74908000066	Hex nut - plastic insert M8 - DIN985		4	4	4	4	4	6	6	6	6
33.	1.329.543	Bracket - 70-76,2-80-96,5 cm		2	2	-	2	-	-	-	3	3
33.	1.373.130	Bracket 50-56 cm		-	-	2	-	-	-	3	-	-
33.	1.372.285	Bracket - 60 cm		-	-	-	-	2	3	-	-	-
34.	1.329.906	Wire - l=3000		1	1	1	1	1	1	1	1	2
34.	1.329.907	Wire - l=5500		1	1	1	2	1	1	1	1	2
34.	1.329.908	Wire - l=850 - For all combines except CASE 1000-2000		2	2	2	2	2	3	3	3	3
34.	1.329.909	Wire - l=850 - CNH	→2014.	2	2	2	2	2	3	3	3	3
34.	1.329.909	Wire - l=850 - Case 1000-2000		-	-	-	-	-	3	3	3	3
34.	1.329.541	Wire - l=1500		2	3	3	2	2	6	5	6	4
35.	96799674430	Harness Claas Lexion	→2013.	1	1	1	1	1	1	1	1	1
35.	1.332.459	Harness Claas Lexion	2014.→	1	1	1	1	1	1	1	1	1
35.	1.379.536	Harness Case 1000-2000	2014.→	1	1	1	1	1	1	1	1	1
36.	73002001601	Roll pin - 2x16 - DIN1481		2	2	2	2	2	3	3	3	3
37.	97327001370	Clamp		10	10	10	10	10	15	15	15	15
38.	81303501366	Self cutting hex bolt - M5x13 DIN7540		10	10	10	10	10	15	15	15	15
39.	79408001666	Hex bolt -M8x16 - DIN933/8.8		8	8	8	8	8	12	12	12	12
40.	91623938761	Washer A8		8	8	8	8	8	12	12	12	12
41.	79408005066	Hex bolt -M8x50 - DIN933/8.8		2	2	2	2	2	3	3	3	3
42.	73508000066	Hex nut -M8 DIN934		4	4	4	4	4	6	6	6	6
43.	96700000003	Rubber plug		8	8	8	8	8	12	12	12	12
	1.329.476	Automatic header height controll CNH, JD, Agco, Claas		1	-	-	-	-	-	-	-	-
	1.379.304	Automatic header height controll CNH, JD, Agco, Claas		-	1	-	-	-	-	-	-	-
	1.373.138	Automatic header height controll CNH, JD, Agco, Claas		-	-	1	-	-	-	-	-	-
	1.379.332	Automatic header height controll CNH, JD, Agco, Claas		-	-	-	1	-	-	-	-	-
	1.372.287	Automatic header height controll CNH, JD, Agco, Claas		-	-	-	-	1	-	-	-	-
	1.372.288	Automatic header height controll CNH, JD		-	-	-	-	-	1	-	-	-
	1.373.137	Automatic header height controll CNH, JD		-	-	-	-	-	-	1	-	-
	1.379.480	Automatic header height controll CNH, JD		-	-	-	-	-	-	-	1	-
	1.379.482	Automatic header height controll CNH, JD		-	-	-	-	-	-	-	-	1
	1.373.136	Automatic header height controll Case 1000-2000		-	-	-	-	-	-	1	-	-
	1.379.479	Automatic header height controll Case 1000-2000		-	-	-	-	-	-	-	1	-
	1.379.481	Automatic header height controll Case 1000-2000		-	-	-	-	-	-	-	-	1

43/A

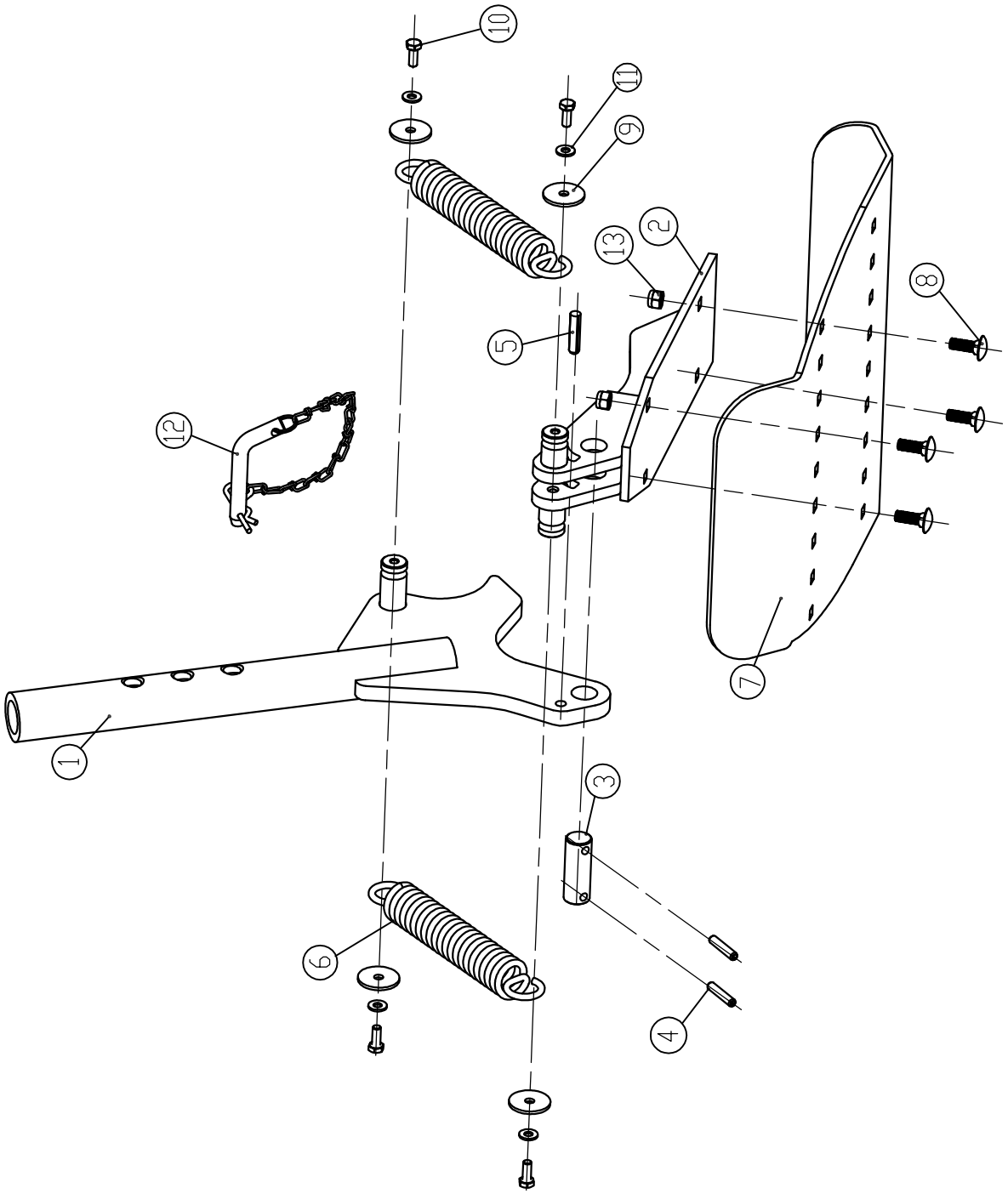

1.378.492

2013

43/A

STALK STOMPER (2011-2017.)

Ref	Part Number	Description		All models
1.	1.378.493	Support assy		2
2.	1.378.497	Body		2
3.	1.356.016	Pin		2
4.	73108004001	Roll pin 8x40 - DIN1473		4
5.	73100104501	Pin 10x45 - ISO 28739		2
6.	1.200.628	Spring		4
7.	1.378.501	Stomper plate		2
8.	76310003066	Carriage bolt M10x30 - DIN603/8.8		8
9.	1.377.699	Washer		8
10.	79408002066	Hex bolt M8x20 - DIN933/8.8		8
11.	91623938761	Spring washer M8		8
12.	1.378.446	Safety pin		2
13.	74901000066	Hex nut - plastic insert M10 - DIN985		8

43/B

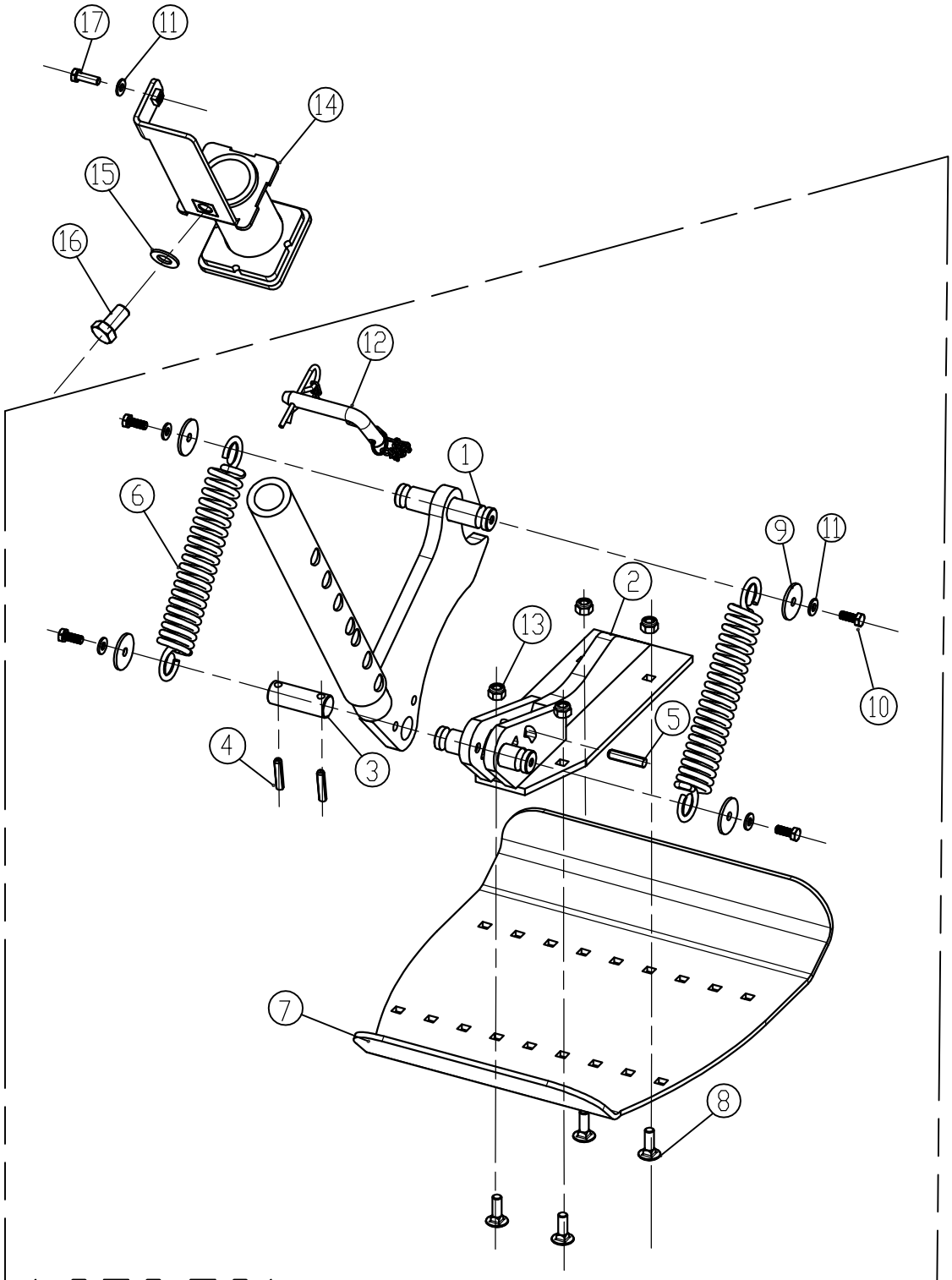

1.372.532

2019

43/B

STALK STOMPER (2018 ->)

Ref	Part Number	Description		All models
1.	1.372.523	Support assy		2
2.	1.378.497	Body		2
3.	1.356.016	Pin		2
4.	73108004001	Roll pin 8x40 - DIN1473		4
5.	73100104501	Pin 10x45 - ISO 28739		2
6.	1.200.628	Spring		4
7.	1.378.501	Stomper plate		2
8.	76310003066	Carriage bolt M10x30 - DIN603/8.8		8
9.	1.377.699	Washer		8
10.	79408002066	Hex bolt M8x20 - DIN933/8.8		8
11.	91623938761	Spring washer M8		10
12.	1.378.446	Safety pin		2
13.	74901000066	Hex nut - plastic insert M10 - DIN985		8
14.	1.372.527	Support assy		2
15.	91623939161	Spring washer M16		2
16.	79416003066	Hex bolt M16x30 - DIN933/8.8		2
17.	79408002566	Hex bolt M8x25 - DIN933/8.8		2
	1.372.532	Stalk stomper kit for 2 wheels		1
	1.372.531	Stalk stomper kit for additional wheels		2

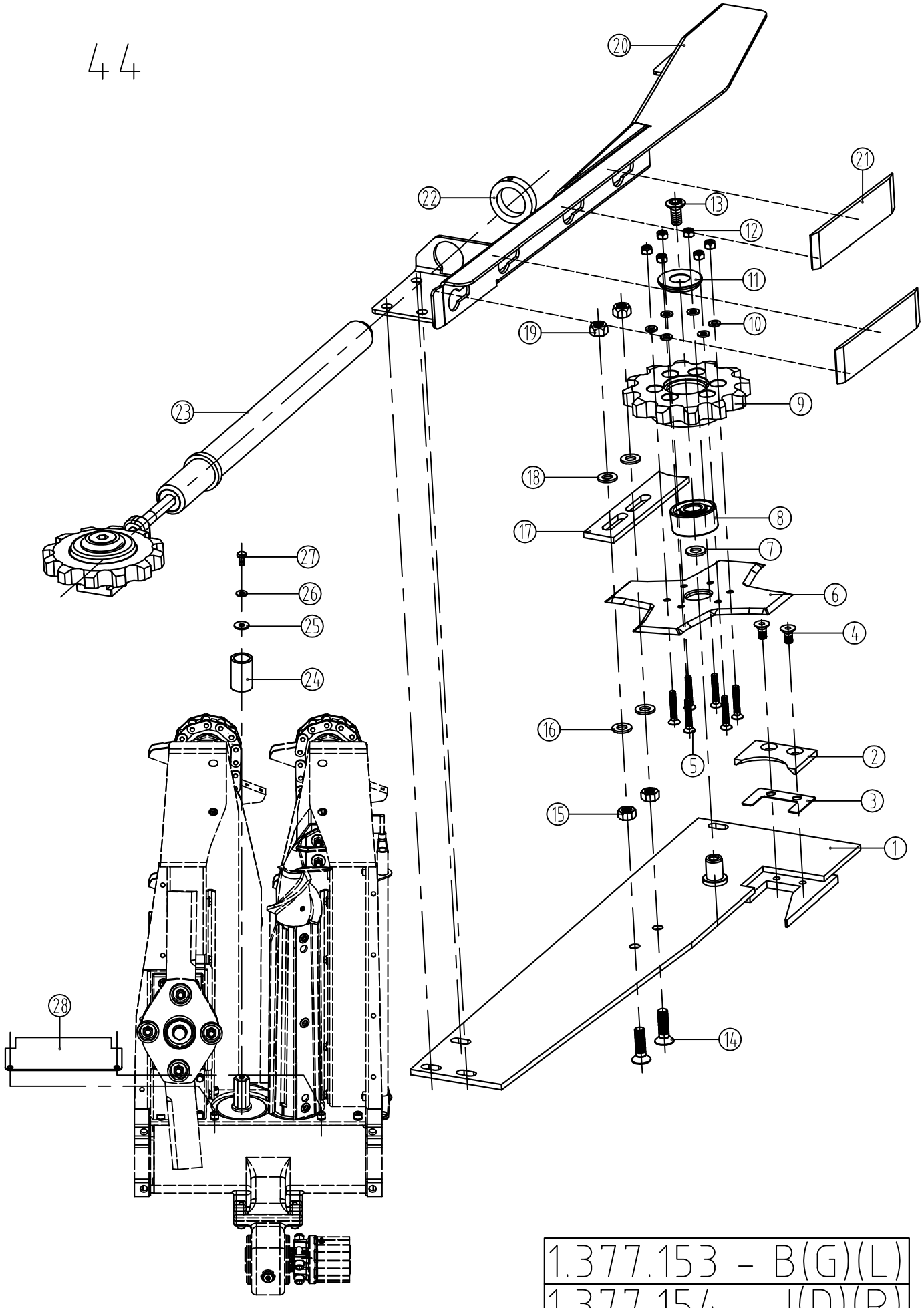

1.377.153 - B(G)(L)
1.377.154 - J(D)(R)

2014

SUNFLOWER KIT

Ref.	Part Number	Description	6 row	8 row	9 row	12 row	4+2 row	4+2x2 row	6+2x3 row
1.	1.377.137	Base welded - LH	-	-	-	-	1	1	1
1.	1.377.138	Base welded - RH	6	8	9	12	5	7	11
2.	1.377.142	Knife - fixed	6	8	9	12	6	8	12
3.	1.377.161	Spacer	6	8	9	12	6	8	12
4.	80408001666	Hex socket countersunk-head bolt M8x16 - DIN7991/8.8	12	16	18	24	12	16	24
5.	80406003066	Hex socket countersunk-head bolt M6x30 - DIN7991/8.8	36	48	54	72	36	48	72
6.	1.322.686	Knife - rotating	6	8	9	12	6	8	12
7.	1.322.691	Shim	6	8	9	12	6	8	12
8.	87000330314	Bearing 3303 A 2RS	6	8	9	12	6	8	12
9.	1.322.687	Sprocket	6	8	9	12	6	8	12
10.	71406000060	Washer M6 - DIN125	36	48	54	72	36	48	72
11.	1.377.144	Spacer	6	8	9	12	6	8	12
12.	70706000026	Lock nut M6 - DIN980	36	48	54	72	36	48	72
13.	80401002563	Hex socket countersunk-head bolt M10x25 - DIN7991/12.9 (TORX)	6	8	9	12	6	8	12
14.	80410003566	Hex socket countersunk-head bolt M10x35 - DIN7991/8.8	12	16	18	24	12	16	24
15.	73510000066	Hex nut M10 - DIN934	12	16	18	24	12	16	24
16.	71410000060	Washer M10 - DIN125	12	16	18	24	12	16	24
17.	1.322.689	Stripper plate	6	8	9	12	6	8	12
18.	71410000060	Washer M10 - DIN125	12	16	18	24	12	16	24
19.	70710000066	Lock nut M10 - DIN980	12	16	18	24	12	16	24
20.	1.377.145	Chain guide - LH	6	8	9	12	6	8	12
20.	1.377.146	Chain guide - RH	6	8	9	12	6	8	12
21.	1.377.088	Inset	12	16	18	24	12	16	24
22.	1.377.163	Spacer	6	8	9	12	6	8	12
23.	1.375.755	Chain adjuster assy	6	8	9	12	6	8	12
24.	1.377.162	Spacer	6	8	9	12	6	8	12
25.	809.124.0	Washer	6	8	9	12	6	8	12
26.	91623938861	Spring washer	6	8	9	12	6	8	12
27.	79410002066	Hex bolt M10x20 - DIN933/8.8	6	8	9	12	6	8	12
28.	1.379.425	Cover	6	8	9	12	6	8	12

Note: Item 24, 25, 26, 27 are only for flute-roll.
Item 28 is only for knife-roll.

45

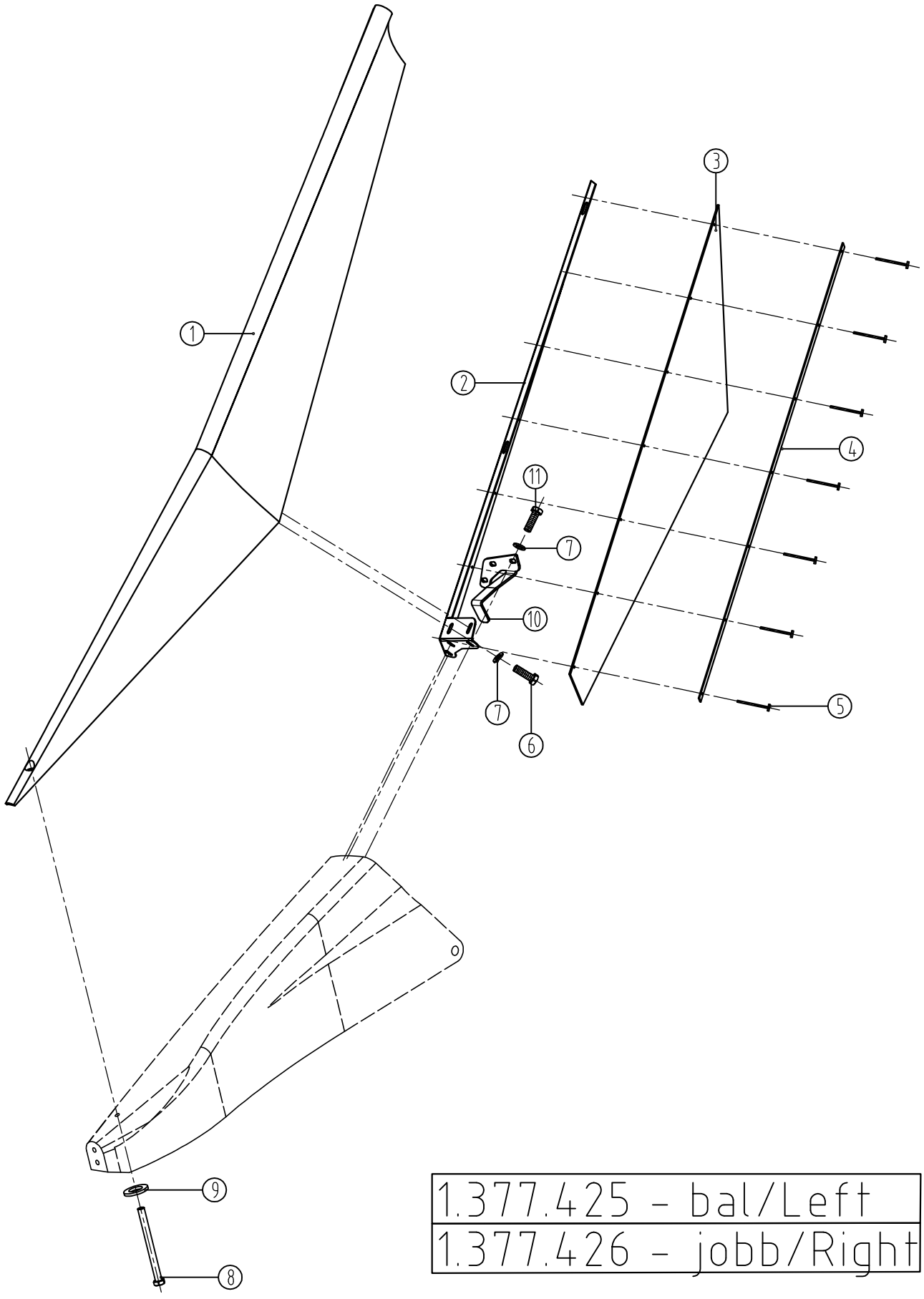

1.377.425 - bal/Left
1.377.426 - jobb/Right

2020

TALL AND DIVIDER (TED)

Ref.	Part Number	Description		All models
1.	1.377.382	Side extension - LH white		1
1.	1.377.382.1	Side extension - LH CASE IH red		1
1.	1.377.382.2	Side extension - LH NH yellow		1
1.	1.377.382.3	Side extension - LH JD green		1
1.	1.377.382.4	Side extension - LH orange		1
1.	1.377.382.5	Side extension - LH Claas green		1
1.	1.377.382.6	Side extension - LH SDF green		1
1.	1.377.382.7	Side extension - LH AGCO red		1
1.	1.377.382.8	Side extension - LH Challenger yellow		1
1.	1.377.382.9	Side extension - LH GLEANER gray		1
1.	1.377.382.10	Side extension - LH chassis gray		1
1.	1.377.383	Side extension - RH white		1
1.	1.377.383.1	Side extension - RH CASE IH red		1
1.	1.377.383.2	Side extension - RH NH yellow		1
1.	1.377.383.3	Side extension - RH JD green		1
1.	1.377.383.4	Side extension - RH orange		1
1.	1.377.383.5	Side extension - RH Claas green		1
1.	1.377.383.6	Side extension - RH SDF green		1
1.	1.377.383.7	Side extension - RH AGCO red		1
1.	1.377.383.8	Side extension - RH Challenger yellow		1
1.	1.377.383.9	Side extension - RH GLEANER gray		1
1.	1.377.383.10	Side extension - RH chassis gray		1
2.	1.377.432	Support - LH	→2019.	1
2.	1.377.433	Support - RH	→2019.	1
2.	1.372.865	Support - LH	2020.→	1
2.	1.372.866	Support - RH	2020.→	1
3.	1.377.429	Rubber curtain	→2019.	2
3.	1.372.946	Rubber curtain	2020.→	2
4.	1.377.428	Flat bar		2
5.	84304001200	POP rivet 4x12 - DIN7337		14
6.	79408002066	Hex bolt M8x20 - DIN933/8.8		8
7.	91623938761	Spring washer M8		14
8.	79408010066	Hex bolt M8x100 - DIN933/8.8		2
9.	1.314.099	Washer		2
10.	1.372.913	End state bracket - LH	2020.→	1
10.	1.372.914	End state bracket - RH	2020.→	1
11.	79408002566	Hex bolt M8x25 - DIN933/8.8		6
	1.377.425	Side extension assy.- LH white		1
	1.377.425.1	Side extension assy.- LH CASE IH red		1
	1.377.425.2	Side extension assy.- LH NH yellow		1
	1.377.425.3	Side extension assy.- LH JD green		1
	1.377.425.4	Side extension assy.- LH orange		1
	1.377.425.5	Side extension assy.- LH Claas green		1
	1.377.425.6	Side extension assy.- LH SDF green		1
	1.377.425.7	Side extension assy. - LH AGCO red		1
	1.377.425.8	Side extension assy.- LH Challenger yellow		1
	1.377.425.9	Side extension assy.- LH GLEANER gray		1
	1.377.425.10	Side extension assy.- LH chassis gray		1
	1.377.426	Side extension assy. - RH white		1
	1.377.426.1	Side extension assy.- RH CASE IH red		1

45

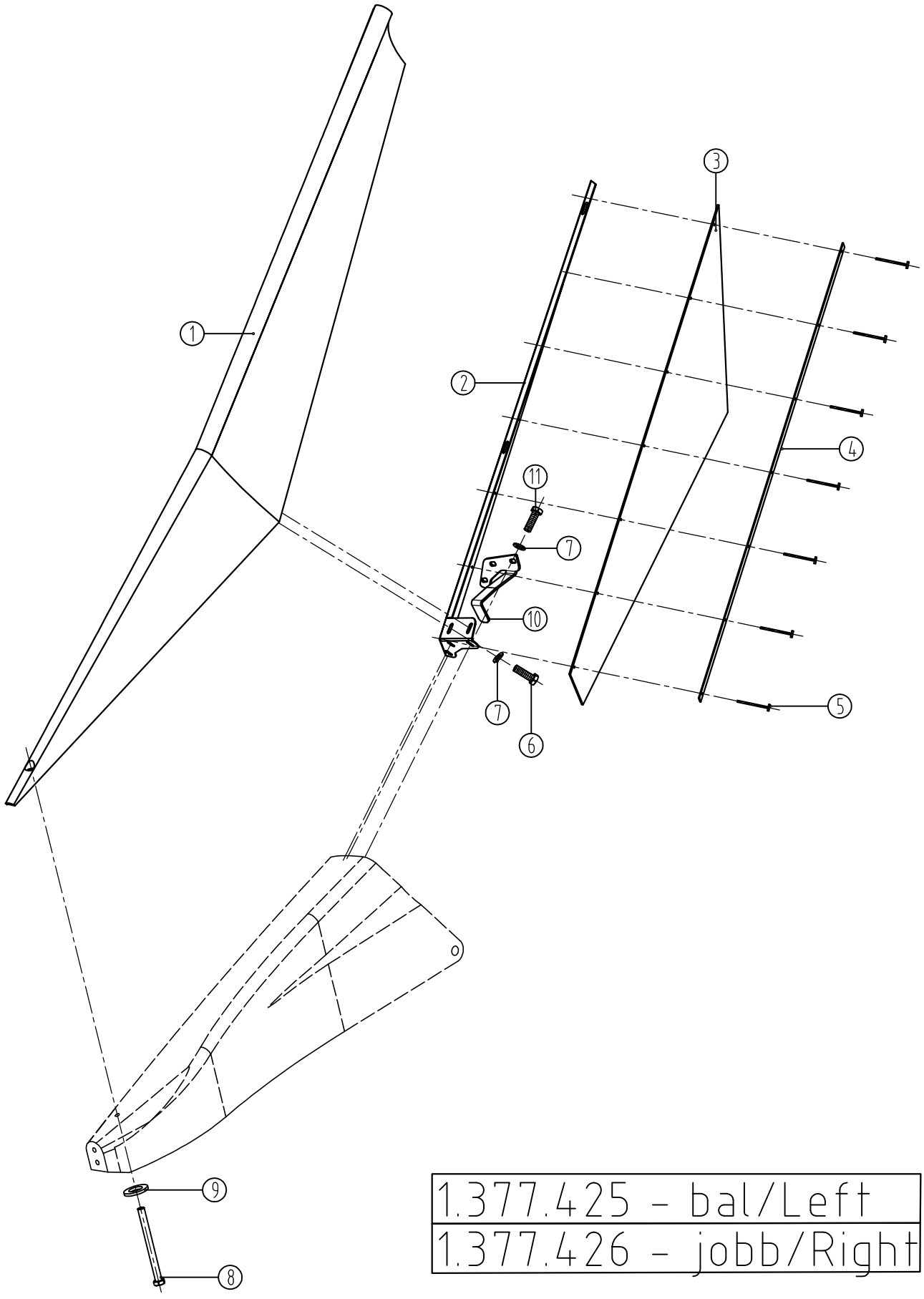

1.377.425 - bal/Left
1.377.426 - jobb/Right

2020

45

TALL AND DIVIDER (TED)

Ref.	Part Number	Description		All models
	1.377.426.2	Side extension assy.- RH NH yellow		1
	1.377.426.3	Side extension assy.- RH JD green		1
	1.377.426.4	Side extension assy.- RH orange		1
	1.377.426.5	Side extension assy.- RH Claas green		1
	1.377.426.6	Side extension assy.- RH SDF green		1
	1.377.426.7	Side extension assy.- RH AGCO red		1
	1.377.426.8	Side extension assy.- RH Challenger yellow		1
	1.377.426.9	Side extension assy.- RH GLEANER gray		1
	1.377.426.10	Side extension assy.- RH chassis gray		1

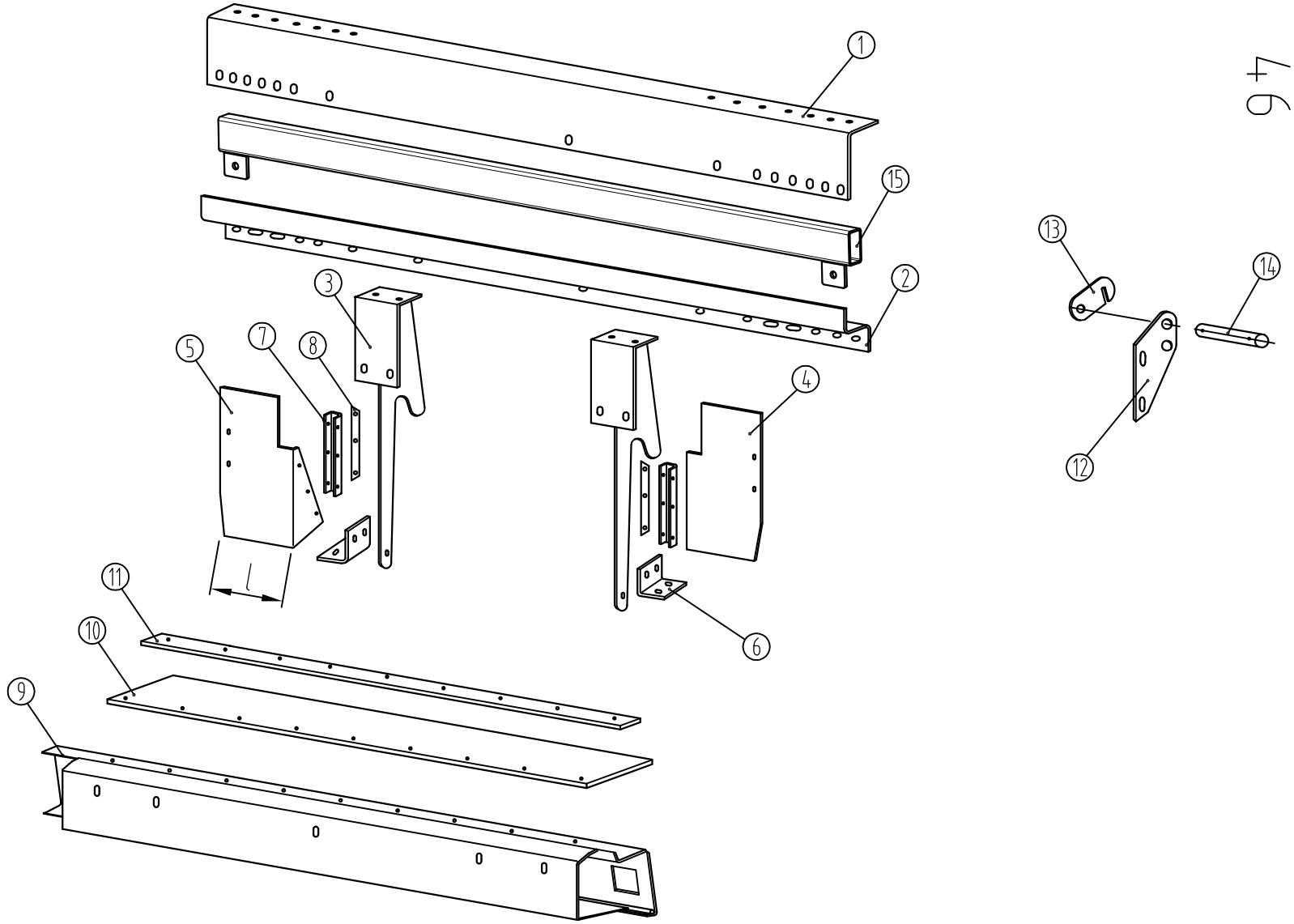

FIAT L.
2016

MOUNTING KIT: FIAT LAVERDA

Ref.	Part Number	Description		All models
1.	1.326.685	Upper filler		1
2.	1.327.495	Stiffener		1
3.	1.326.673	Bracket		2
4.	1.326.675	Inlet - LH (l=195)		1
4.	1.326.688	Inlet - LH (l=373)		1
5.	1.326.676	Inlet - RH (l=195)		1
5.	1.326.689	Inlet - RH (l=373)		1
6.	1.326.684	Angle		2
7.	1.326.549	Rubber plate	->2019	2
7.	1.372.959	Rubber plate	2020 ->	2
8.	1.328.550	Flat		2
9.	1.326.681	Lower filler		1
10.	1.326.682	Rubber plate	->2019	1
10.	1.372.960	Rubber plate	2020 ->	1
11.	1.326.683	Flat		1
12.	1.326.502	Support		2
13.	1.309.377	Retainer		1
14.	1.320.686	Pin		1
15.	1.372.252	Hollow section welded		1

Note: for PTO drive shafts see page 1!

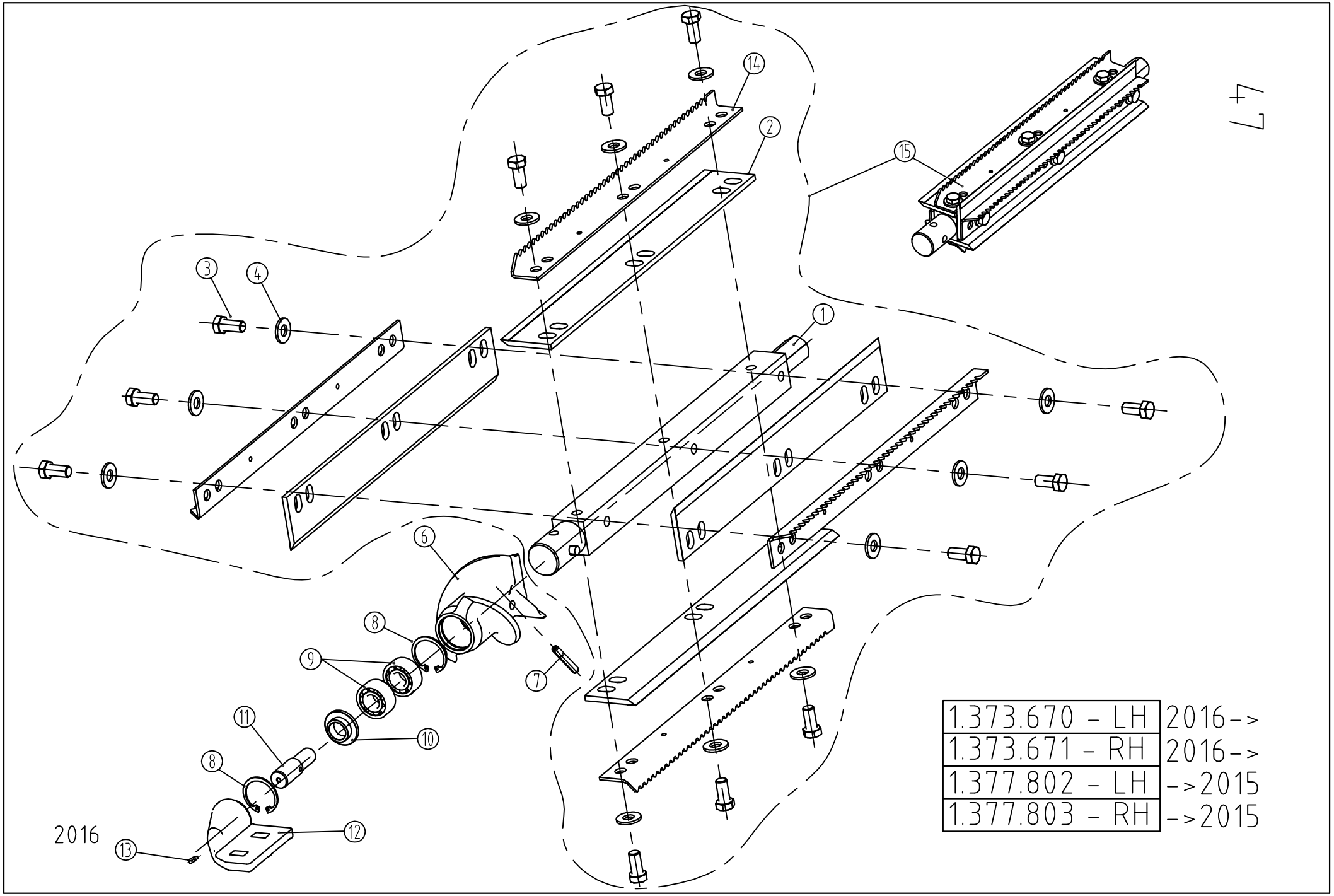

1.373.670 - LH	2016->
1.373.671 - RH	2016->
1.377.802 - LH	->2015
1.377.803 - RH	->2015

SNAPPING KNIFE-ROLL

Ref.	Part Number	Description		6 row	7 row	8 row	9 row	12 row	16 row
1.	1.377.247	Snapping roll body		12	14	16	19	24	32
2.	1.377.250	Knife		48	56	64	76	96	128
3.	79412125256	Hex bolt M12x25x1.25 - DIN961		144	168	192	216	288	384
4.	91623938961	Spring washer- A12		144	168	192	216	288	384
5.	1.377.251	Washer	→2010	144	168	192	216	288	384
6.	1.377.800	Auger - LH	→2015	6	7	8	9	12	16
6.	1.377.801	Auger - RH	→2015	6	7	8	9	12	16
6.	1.379.973	Auger - LH	2016→	6	7	8	9	12	16
6.	1.379.974	Auger - RH	2016→	6	7	8	9	12	16
7.	73010005501	Spring pin 10x55 - DIN1481		12	14	16	18	24	32
7.	73006005501	Spring pin 6x55 - DIN1481		12	14	16	18	24	32
7.	73100105501	Pin 10x55 - DIN28739	2011→	12	14	16	18	24	32
8.	70100004001	Retaining ring - internal 40x1.75 - DIN472		24	28	32	36	48	64
9.	87000420314	Bearing 4203 - DIN625	→2015	24	28	32	36	48	64
9.	87000320314	Bearing 3203 A-2RS	2016→	24	28	32	36	48	64
10.	1.377.392	Spacer		12	14	16	18	24	32
11.	1.377.393	Shaft		12	14	16	18	24	32
12.	1.377.297	Bearing housing - LH		6	7	8	9	12	16
12.	1.377.298	Bearing housing - RH		6	7	8	9	12	16
13.	70006011860	Grease fitting 6x1x180° - DIN71412	2011→	12	14	16	18	24	32
14.	1.378.440	Flute - LH	2011→	24	28	32	36	48	64
14.	1.378.441	Flute -RH	2011→	24	28	32	36	48	64
15.	1.379.779	Snapping roll pre-assy.-LH (items 1-4 and14)		12	14	16	19	24	32
15.	1.379.780	Snapping roll pre-assy.-RH (items 1-4 and14)		12	14	16	19	24	32
	1.377.802	Snapping roll assy.-LH (items 1-4 and 6-14)	→2015	6	7	8	9	12	16
	1.377.803	Snapping roll assy.-RH (items 1-4 and 6-14)	→2015	6	7	8	9	12	16
	1.373.670	Snapping roll assy.-LH (items 1-4 and 6-14)	2016→	6	7	8	9	12	16
	1.373.671	Snapping roll assy.-RH (items 1-4 and 6-14)	2016→	6	7	8	9	12	16

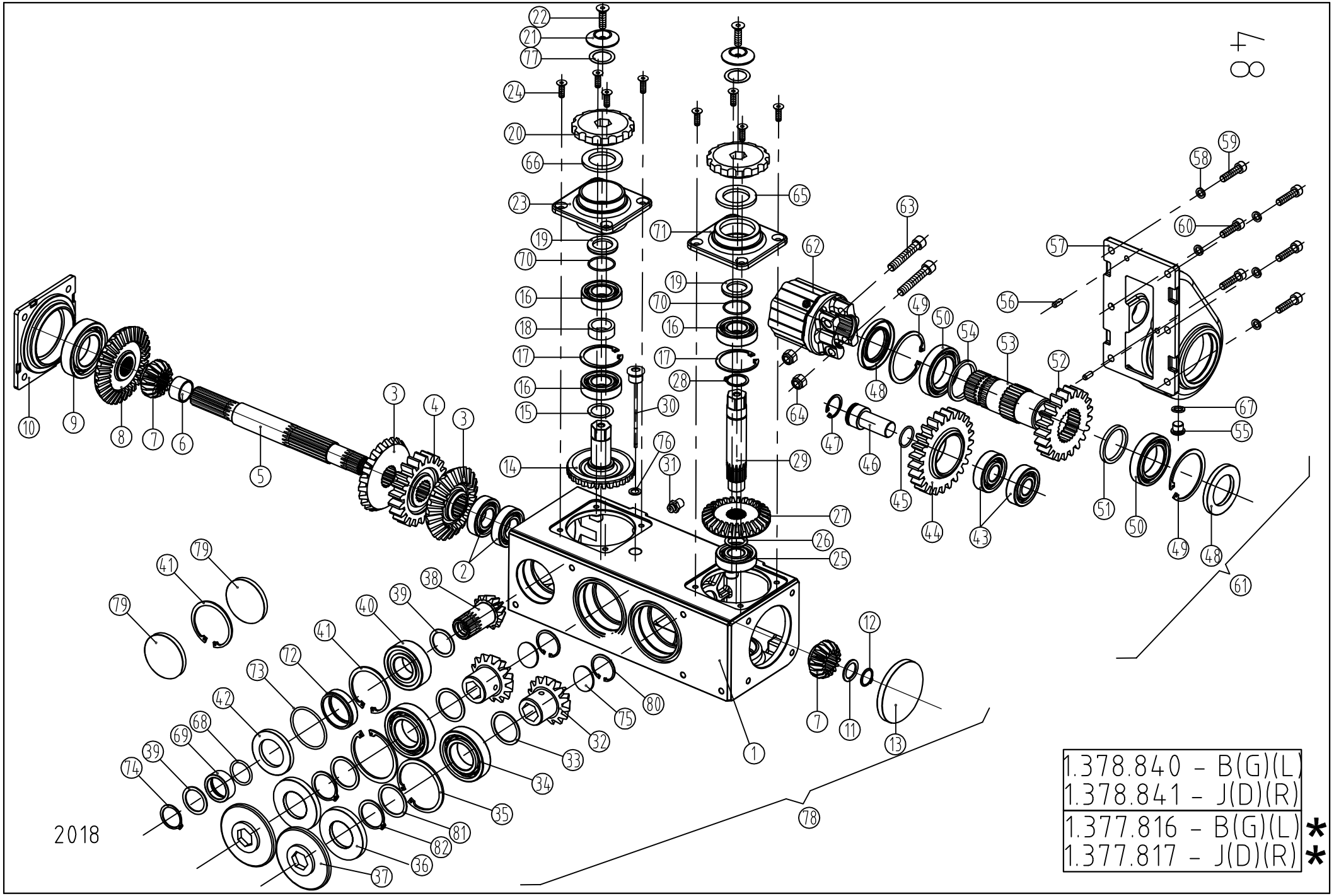

1.378.840 – B(G)(L)
1.378.841 – J(D)(R)
1.377.816 – B(G)(L) *
1.377.817 – J(D)(R) *

2018

SNAPPING UNIT GEARBOX
FOR KNIFE-ROLL ROW UNIT

Ref.	Part Number	Description		6 row	7 row	8 row	9 row	12 row	16 row
1.	1.375.722	Gearbox housing		6	7	8	9	12	16
2.	87000620611	Bearing 6206 - DIN625		12	14	16	18	24	32
3.	1.377.243	Bevel gear 25T		12	14	16	18	24	32
4.	1.375.693	Cyl. gear 21T		6	7	8	9	12	16
5.	1.375.706	Shaft		6	7	8	9	12	16
6.	1.375.754	Spacer		6	7	8	9	12	16
7.	1.375.689	Bevel gear 16T		12	14	16	18	24	32
8.	1.375.688	Bevel gear 33T		6	7	8	9	12	16
8.	1.378.507	Bevel gear 33T	2011→	6	7	8	9	12	16
9.	87000621010	Bearing 6210 - DIN625		6	7	8	9	12	16
9.	87000421010	Bearing 4210 -DIN625	2011→	6	7	8	9	12	16
10.	1.375.710	Bearing housing		6	7	8	9	12	16
11.	71625035200	Shim 25x35x2 - DIN988		6	7	8	9	12	16
12.	70200002501	Retaining ring - external 25x1.2 - DIN471		6	7	8	9	12	16
13.	85801001000	Seal 100x10		6	7	8	9	12	16
14.	1.377.733	Bevel gear 29T		6	7	8	9	12	16
15.	71630042050	Shim 30x42x0.5 - DIN988		12	14	16	18	24	32
15.	71630042020	Shim 30x42x0.2 - DIN988		12	14	16	18	24	32
15.	71630042010	Shim 30x42x0,1 - DIN988		6	7	8	9	12	16
16.	87001620614	Bearing 6206-2RS - DIN625		18	21	24	27	36	48
17.	70100006201	Retaining ring - internal 62x2 - DIN472		12	14	16	19	24	32
18.	1.375.703	Spacer		6	7	8	9	12	16
19.	1.377.734	Shim		6	7	8	9	12	16
20.	1.377.722	Sprocket z=12 t=30		12	14	16	18	24	32
21.	1.375.019	Washer		12	14	16	18	24	32
22.	80401003063	Hex socket countersunk-head bolt M10x30 - DIN7991/10.9		12	14	16	18	24	32
23.	1.375.712	Bearing housing - RH		6	7	8	9	12	16
24.	80400802563	Hex socket countersunk-head bolt M8x25 - DIN7991/10.9		48	56	64	72	96	128
25.	87010630510	Bearing 6305 - DIN625		6	7	8	9	12	16
26.	71625035050	Shim 25x35x0.5 - DIN988		12	14	16	18	24	32
26.	71625035020	Shim 25x35x0.2 - DIN988		12	14	16	18	24	32
26.	71625035010	Shim 25x35x0.1 - DIN988		6	7	8	9	12	16
27.	1.375.700	Bevel gear 29T		6	7	8	9	12	16
28.	70200003001	Retaining ring - external 30x1.5 - DIN471		6	7	8	9	12	16
29.	1.377.731	Shaft		6	7	8	9	12	16
30.	1.377.093	Dipstick		6	7	8	9	12	16
31.	1.309.247	Breather		6	7	8	9	12	16
32.	1.377.244	Bevel gear 13T		12	14	16	18	24	32
33.	71645055050	Shim 45x55x0.5 - DIN988		24	28	32	36	48	64
33.	71645055020	Shim 45x55x0.2 - DIN988		24	28	32	36	48	64
33.	71645055010	Shim 45x55x0.1 - DIN988		12	14	16	18	24	32
34.	87001620910	Bearing 6209 - DIN625		12	14	16	18	24	32
35.	70100008501	Retaining ring - internal 85x3 - DIN472		12	14	16	18	24	32
36.	85804508501	Seal 45x85x10 - DIN3760-AS		12	14	16	18	24	32
37.	1.375.836	Cover piece		12	14	16	18	24	32
38.*	1.375.687	Bevel gear 13T		6	7	8	9	12	16
39.*	71635045050	Shim 35x45x0.5 - DIN988		18	21	24	27	36	48
39.*	71635045020	Shim 35x45x0.2 - DIN988		24	28	32	36	48	64
39.*	71635045010	Shim 35x45x0.1 - DIN988		12	14	16	18	24	32
40.*	87001420710	Bearing 4207 - DIN625		6	7	8	9	12	16
41.	70100007201	Retaining ring - internal 72x2.5 - DIN472		6	7	8	9	12	16
42.*	85804506208	Seal 45x62x8 - DIN3760-AS		6	7	8	9	12	16
43.	87010630510	Bearing 6305 - DIN625		12	14	16	18	24	32
44.	1.375.694	Cyl. gear 25T		6	7	8	9	12	16
45.	63003026500	O-ring 30x2.65 - DIN3771		6	7	8	9	12	16
46.	1.375.696	Shaft		6	7	8	9	12	16
47.	70100003501	Retaining ring - internal 35x1.5 - DIN472		6	7	8	9	12	16
48.	85805008008	Seal 50x80x8 - DIN3760-AS		12	14	16	18	24	32
49.	70100008001	Retaining ring - internal 80x2.5 - DIN472		12	14	16	18	24	32
50.	87001601010	Bearing 6010 - DIN625		12	14	16	18	24	32
51.	1.375.697	Spacer		6	7	8	9	12	16
52.	1.375.695	Cyl. gear 21T		6	7	8	9	12	16
53.	1.375.699	Shaft		6	7	8	9	12	16
54.	1.375.698	Spacer		6	7	8	9	12	16
55.	79201601560	Closing screw M16x1.5 - DIN908		6	7	8	9	12	16
56.	1.375.746	Dowel pin		12	14	16	18	24	32
57.	1.375.723	Gearbox housing		6	7	8	9	12	16
58.	71810000060	Spring washer M10 - DIN7980		36	42	48	54	72	96
59.	80210004063	Hex socket head cap bolt M10x40 - DIN912/10.9		30	35	40	45	60	80

Note: application of shims depends on the backlash of the gears.
The items marked with * are for machines with chopper only!

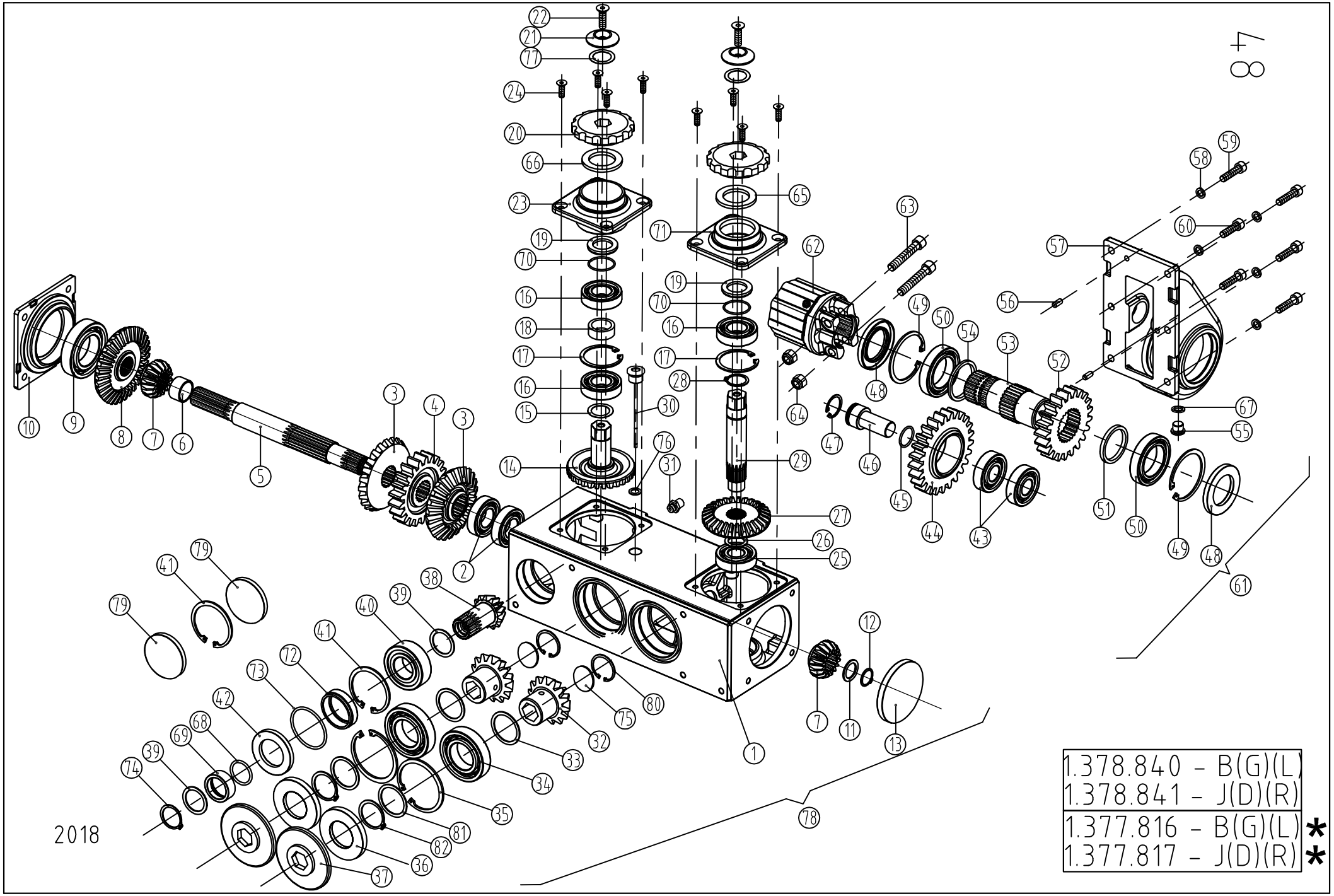

1.378.840 – B(G)(L)
1.378.841 – J(D)(R)
1.377.816 – B(G)(L) *
1.377.817 – J(D)(R) *

2018

SNAPPING UNIT GEARBOX
FOR KNIFE-ROLL ROW UNIT

Ref.	Part Number	Description		6 row	7 row	8 row	9 row	12 row	16 row
60.	80210003563	Hex socket head cap bolt M10x35 - DIN912/10.9		6	7	8	9	12	16
61.	1.375.955	Gearbox assy - LH (items 43-55, 57, 62 and 67)		6	7	8	9	12	16
61.	1.375.717	Gearbox assy - RH (items 43-55, 57, 62 and 67)		6	7	8	9	12	16
62.	1.375.025	Safety clutch (Walterscheid)	→2016	6	7	8	9	12	16
62.	1.373.387	Safety clutch (Walterscheid) EK 33B	2017→	6	7	8	9	12	16
63.	80212006566	Hex socket head cap bolt M12x65 - DIN912/8.8	→2016	12	14	16	18	24	32
64.	74901200066	Hex nut - plastic insert M12 - DIN982	→2016	12	14	16	18	24	32
65.	85804055007	Seal 40x55x7 - DIN3760-AS		6	7	8	9	12	16
66.	85804006207	Seal 40x62x7 - DIN3760-AS		6	7	8	9	12	16
67.	05200001600	Copper washer M16 - DIN7603		6	7	8	9	12	16
68.*	63003503500	O-ring 35x3.5		6	7	8	9	12	16
69.*	1.375.744	Spacer		6	7	8	9	12	16
70.	63003030010	O-ring 30x3		12	14	16	18	24	32
71.	1.377.732	Bearing housing - LH		6	7	8	9	12	16
72.*	1.377.775	Guide ring		6	7	8	9	12	16
73.*	63007151500	O-ring 71.5x1.5		6	7	8	9	12	16
74.*	70200003501	Retaining ring - external 35x1.5 - DIN471		6	7	8	9	12	16
75.	85803200500	Seal 32x5 NBR		12	14	16	18	24	32
76.	05200200024	Copper washer 20x24 - DIN7603		6	7	8	9	12	16
77.	71619026020	Shim 19x26x0,2- DIN988	2011→	12	14	16	18	24	32
77.	71619026050	Shim 19x26x0,5-DIN988	2011→	12	14	16	18	24	32
77.	71619026120	Shim 19x26x1,2-DIN988	2011→	12	14	16	18	24	32
78.	1.379.709	Gearbox sub - assy (items 1-19, 23-36, 38-42, 65, 66, 68-72, 74, 75 and 80-82)		6	7	8	9	12	16
78.	1.379.710	Gearbox sub - assy, no chopper (items 1-19, 23-36, 41, 65, 66, 70, 71, 75, 76, 79 and 80)		6	7	8	9	12	16
79.	85807200700	Seal NBR 72x7, no chopper		12	14	16	18	24	32
80.	70100003201	Retaining ring - internal 32x1,2 - DIN472	2015→	12	14	16	18	24	32
81.	71645055200	Shim 45x55x2 - DIN988		12	14	16	18	24	32
82.	70200004501	Retaining ring - external 45x1.5 - DIN471		12	14	16	18	24	32
	1.378.840	Snapping unit gearbox - LH, no chopper (items 56, 58-61and 78)		6	7	8	9	12	16
	1.378.841	Snapping unit gearbox - RH, no chopper (items 56, 58-61and 78)		6	7	8	9	12	16
*	1.377.816	Snapping unit gearbox - LH (items 56, 58-61and 78)		6	7	8	9	12	16
*	1.377.817	Snapping unit gearbox - RH (items 56, 58-61and 78)		6	7	8	9	12	16

Note: application of shims depends on the backlash of the gears.
The items marked with * are for machines with chopper only!

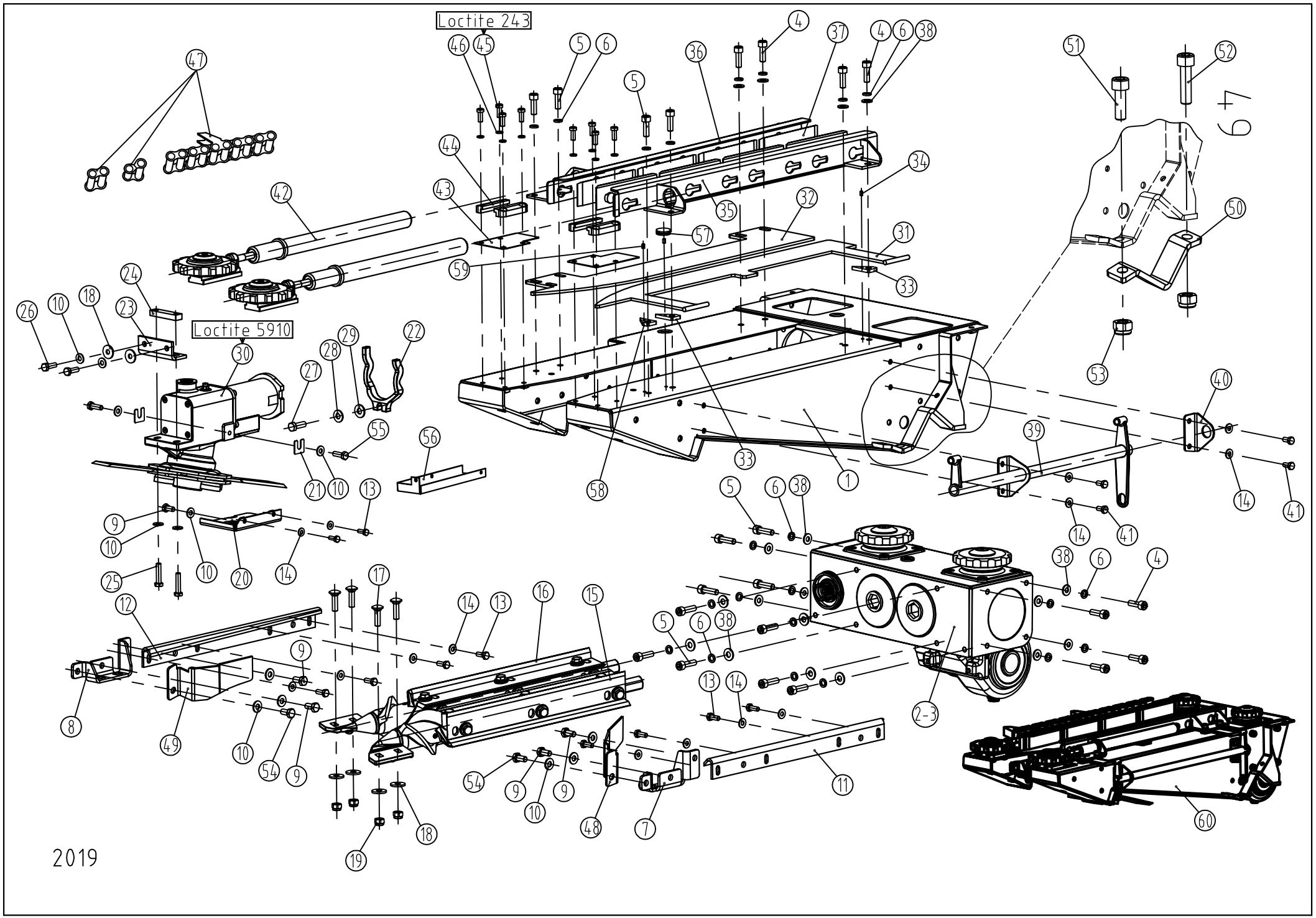
Loctite 243
Loctite 5910
2019

SNAPPING UNIT
WITH KNIFE ROLLS

Ref.	Part Number	Description		6 row 70-76,2 cm	7 row 60cm	8 row 50cm	8 row 56cm	8 row 70-76,2 - 96,5 cm	9 row 76,2 cm	12 row 50,56 cm	12 row 70-76,2 cm	16 row 70-76,2 cm
1.	1.377.754	Frame assy	→2015	6	7	8	8	8	9	12	12	16
1.	1.373.426	Frame assy	2016→	6	7	8	8	8	9	12	12	16
2.	1.377.816	Gearbox - RH		3	4	4	4	4	4	6	6	8
3.	1.377.817	Gearbox - LH		3	3	4	4	4	5	6	6	8
4.	80210003063	Hex socket head cap bolt M10x30 - DIN912/10.9		42	49	56	56	56	63	84	84	112
5.	80210003563	Hex socket head cap bolt M10x35 - DIN912/10.9		84	98	112	112	112	126	168	168	224
6.	71810000060	Spring washer M10 - DIN7980		126	147	168	168	168	189	252	252	336
7.	1.375.800	Support - LH		6	7	8	8	8	9	12	12	16
8.	1.375.801	Support - RH		6	7	8	8	8	9	12	12	16
9.	79410002066	Hex bolt M10x20 - DIN933/8.8		30	35	40	40	40	45	60	60	80
10.	91623938861	Spring washer - A10		78	91	104	104	104	117	156	156	208
11.	1.377.267	Clearing knife - LH		6	7	8	8	8	9	12	12	16
12.	1.377.266	Clearing knife - RH		6	7	8	8	8	9	12	12	16
13.	79408001866	Hex bolt M8x18 - DIN933/8.8		60	70	80	80	80	90	120	120	160
14.	91623938761	Spring washer - A8		84	98	112	112	112	126	168	168	224
15.	1.377.803	Snapping roll - LH	→2015	6	7	8	8	8	9	12	12	16
15.	1.373.670	Snapping roll - LH	2016→	6	7	8	8	8	9	12	12	16
16.	1.377.802	Snapping roll - RH	→2015	6	7	8	8	8	9	12	12	16
16.	1.373.671	Snapping roll - RH	2016→	6	7	8	8	8	9	12	12	16
-	ALUBIA 00 EP	Lubricating grease										
17.	76310003566	Carriage bolt M10x35 - DIN603/8.8		24	28	32	32	32	36	48	48	64
18.	96702375920	Washer M10		36	42	48	48	48	54	72	72	96
19.	70710000066	Lock nut M10 - DIN980		24	27	32	32	32	36	48	48	64
20.	1.377.793	Cover plate		6	7	8	8	8	9	12	12	16
21.	1.377.990	Shimming plate		24	27	32	32	32	36	48	48	64
22.	1.377.788	Fixing fork		6	7	8	8	8	9	12	12	16
23.	1.377.791	Angle		6	7	8	8	8	9	12	12	16
24.	1.378.178	Flat		6	7	8	8	8	9	12	12	16
25.	79410004566	Hex bolt M10x45 - DIN933/8.8		12	14	16	16	16	18	24	24	32
26.	79410003066	Hex bolt M10x30 - DIN933/8.8		12	14	16	16	16	18	24	24	32
27.	79412003566	Hex bolt M12x35 - DIN933/8.8		6	7	8	8	8	9	12	12	16
28.	91623938961	Spring washer - A12		6	7	8	8	8	9	12	12	16
29.	1.377.251	Washer		6	7	8	8	8	9	12	12	16
30.	1.377.762	Stalk chopper assy		6	7	4	4	8	9	6	12	16
30.	1.379.707	Stalk chopper assy**	2014→	-	-	4	4	-	-	6	-	-
-	Loctite 5910	RTV silicone										
31.	1.375.819	Snapping plate - LH	→2010	6	7	8	8	8	9	12	12	16
31.	1.378.472	Snapping plate - LH	2011→2015	6	7	8	8	8	9	12	12	16
31.	1.373.738	Snapping plate - LH	2016→	6	7	8	8	8	9	12	12	16
32.	1.375.822	Snapping plate - RH	→2010	6	7	8	8	8	9	12	12	16
32.	1.378.474	Snapping plate - RH	2011→	6	7	8	8	8	9	12	12	16
33.	1.376.067	Washer		12	14	16	16	16	18	24	24	32
34.	73005000801	Spring pin 5x8		12	14	16	16	16	18	24	24	32
35.	1.377.983	Chain guide - LH	→2015	6	7	8	8	8	9	12	12	16
35.	1.373.734	Chain guide - LH	2016→	6	7	8	8	8	9	12	12	16
36.	1.377.984	Chain guide - RH		6	7	8	8	8	9	12	12	16
37.	1.377.088	Inset		48	56	64	64	64	72	96	96	128
38.	71410000060	Washer M10 - DIN 125		84	98	112	112	112	126	168	168	224
39.	1.375.813	Crank-arm assy		6	7	8	8	8	9	12	12	16
40.	1.377.989	Console		6	7	8	8	8	9	12	12	16
41.	79408002066	Hex bolt M8x20- DIN933/8.8		24	28	32	32	32	36	48	48	64
42.	1.375.755	Chain adjuster assy		12	14	16	16	16	18	24	24	32
43.	1.375.832	Shimming plate		12	14	16	16	16	18	24	24	32
44.	1.375.833	Guide		24	28	32	32	32	36	48	48	64
45.	80308002062	Hex socket head cap bolt M8x20 - DIN6912/12.9		48	56	64	64	64	72	96	96	128

Note: The snapping unit layouts can be found on the following pages: 14/A, 14/B & 15/A

The items marked with * are only valid for machines without a chopper!

The item marked with ** are used at every second snapping unit from the right in case of 20"& 22" machines!

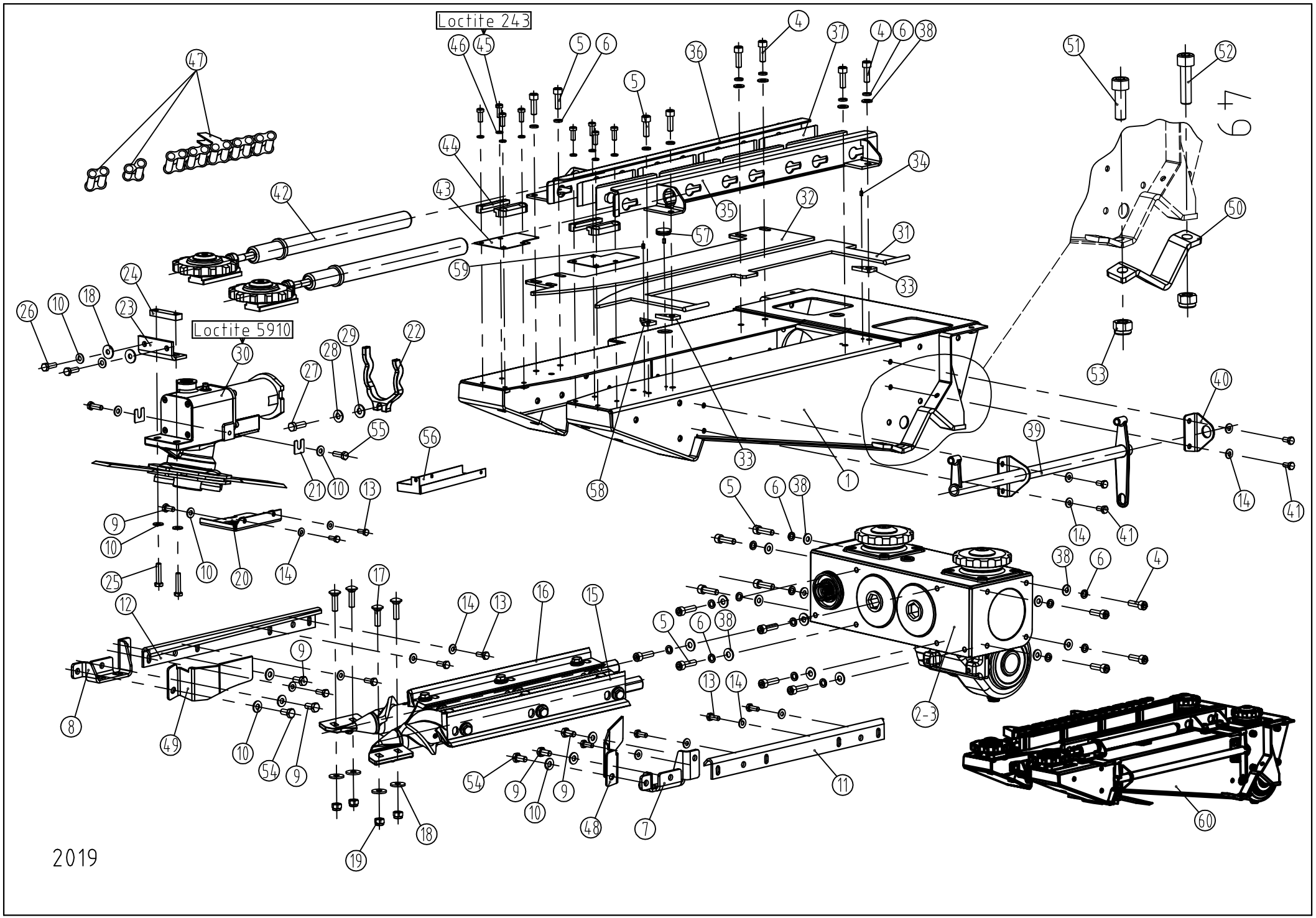
Loctite 243
Loctite 5910
2019

SNAPPING UNIT
WITH KNIFE ROLLS

Ref.	Part Number	Description		6 row 70-76,2 cm	7 row 60cm	8 row 50cm	8 row 56cm	8 row 70-76,2 - 96,5 cm	9 row 76,2 cm	12 row 50,56 cm	12 row 70-76,2 cm	16 row 70-76,2 cm
-	Loctite 243	Threadlocking agent										
46.	71808000060	Spring washer M8 - DIN7980	→2013	48	56	64	64	64	72	96	96	128
47.	1.326.221	Gathering chain (t=30mm, 36 pitches)		12	14	16	16	16	18	24	24	32
47.	84553333520	Offset link-30mm pitch (repairs only)		12	14	16	16	16	18	24	24	32
47.	84530000000	Connector link-30mm pitch (repairs only)		12	14	16	16	16	18	24	24	32
48.	1.377.398	Deflector plate - LH		6	7	8	8	8	9	12	12	16
49.	1.377.399	Deflector plate - RH		6	7	8	8	8	9	12	12	16
50.	1.375.947	Clamping bracket		12	14	16	16	16	18	24	24	32
51.	80214004566	Hex socket head cap bolt M14x45 - DIN912/8.8		12	14	16	16	16	18	24	24	32
52.	80214006566	Hex socket head cap bolt M14x65 - DIN912/8.8		12	14	16	16	16	18	24	24	32
53.	74901400066	Hex nut - plastic insert M14 - DIN982/8.		24	28	32	32	32	36	48	48	64
54.	79410002566	Hex bolt M10x25 - DIN933/8.8		12	14	16	16	16	18	24	24	32
55.	79410003063	Hex bolt M10x30 - DIN933/10.9		12	14	16	16	16	18	24	24	32
56.	1.379.075	Cover plate weld *		6	7	8	8	8	9	12	12	16
57.	96700000003	Rubber plug *		6	7	8	8	8	9	12	12	16
58.	1.373.740	Washer	2016→	6	7	8	8	8	9	12	12	16
59.	73005001601	Spring pin 5x16	2016→	6	7	8	8	8	9	12	12	16
60.	1.377.814	Snapping unit left + chop		3	3	3	2	4	5	4	6	8
60.	1.377.815	Snapping unit right + chop		3	4	1	2	4	4	2	6	8
60.	1.379.711	Snapping unit left + chop, 50,8-56 cm		-	-	1	2	-	-	2	-	-
60.	1.379.712	Snapping unit right + chop, 50,8-56 cm		-	-	3	2	-	-	4	-	-
60.	1.378.838	Snapping unit left non chopping		3	3	4	4	4	5	6	6	8
60.	1.378.839	Snapping unit right non chopping		3	4	4	4	4	4	6	6	8

Note: The snapping unit layouts can be found on the following pages: 14/A, 14/B & 15/A

The items marked with * are only valid for machines without a chopper!

The item marked with ** are used at every second snapping unit from the right in case of 20"& 22" machines!

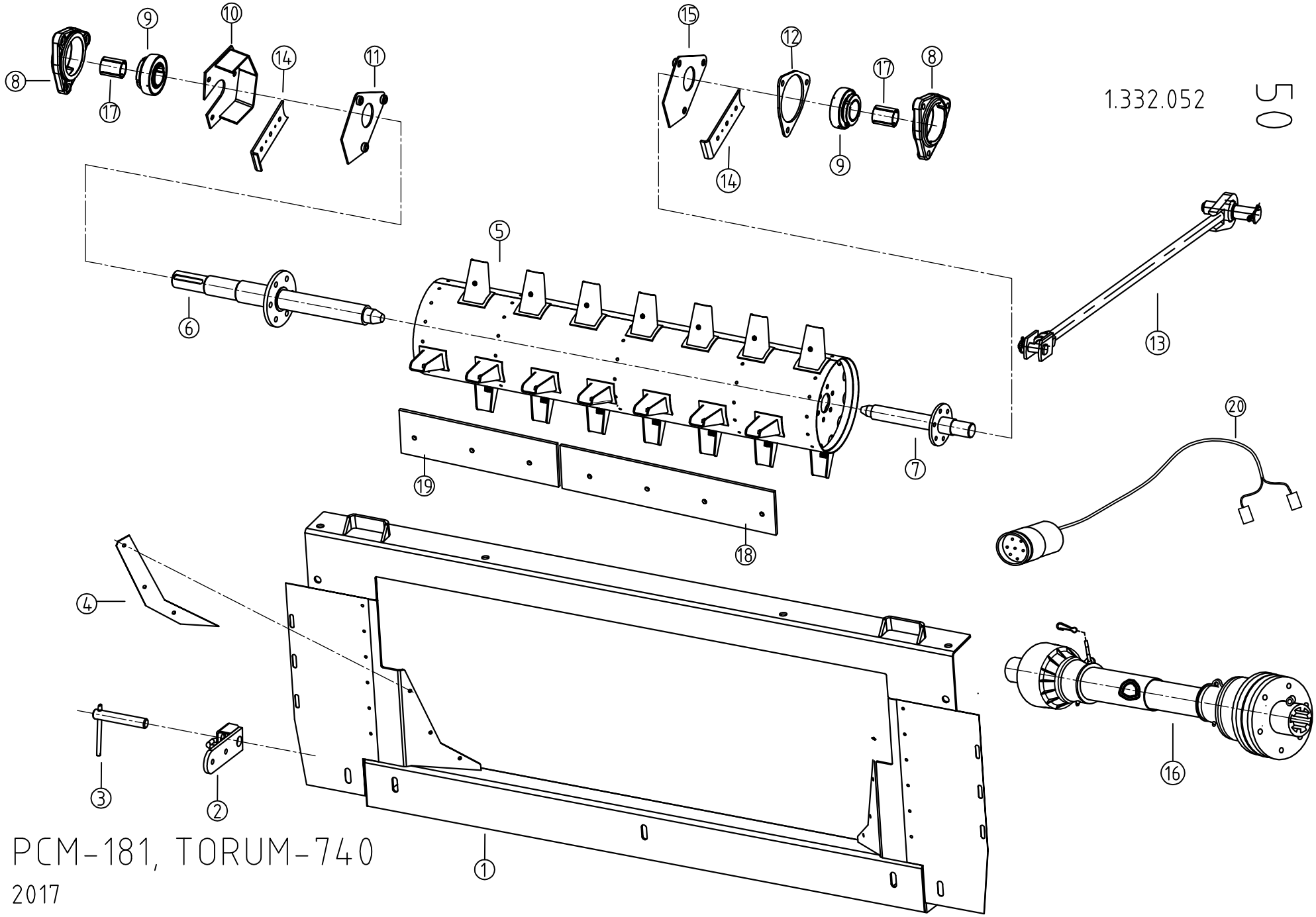
1.332.052
5
PCM-181, TORUM-740
2017

MOUNTING KIT: Torum 740;PCM 181

Ref.	Part Number	Description		All models
1.	1.332.011	Frame assy		1
2.	1.332.029	Fixer left welded		1
2.	1.332.030	Fixer right welded		1
3.	1.332.033	Retainer		2
4.	1.332.020	Rubber plate	->2019	2
4.	1.372.961	Rubber plate	2020 ->	2
5.	1.332.035	Feeding cylinder		1
6.	1.332.044	Shaft right welded		1
7.	1.329.074	Shaft left welded		1
8.	1.332.064	Bearing Housing		2
9.	87100004500	Bearing/GSH45RRB		2
10.	1.332.068	Support plate welded		1
11.	1.332.062	Closing plate right welded		1
12.	1.332.063	Support plate		1
13.	1.332.128	Operating rod		2
14.	1.332.059	Cover plate		2
15.	1.332.061	Closing plate left welded		1
16.	-	PTO drive shaft (See page 1 !)		
17.	1.332.487	Splitted sleeve		2
18.	1.332.848	Rubber plate	2016-2019	4
18.	1.372.958	Rubber plate	2020 ->	4
19.	1.332.849	Rubber plate	2016-2019	4
19.	1.372.962	Rubber plate	2020 ->	4
19.	1.373.563	Harness		1
	1.332.052	Mounting kit. (items 1-15, 17-19)		1

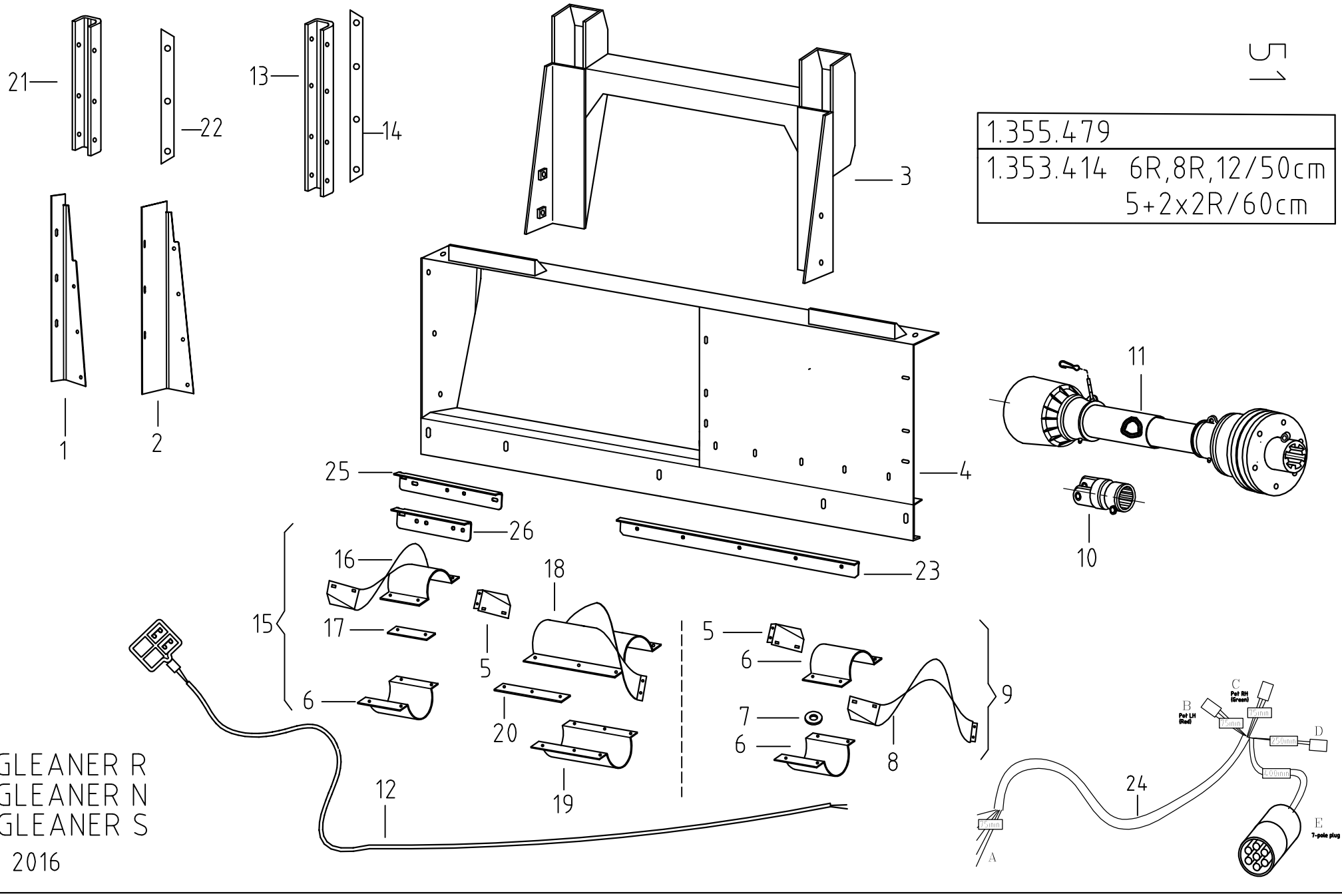
51
1.355.479
1.353.414 6R,8R,12/50cm
5+2x2R/60cm
GLEANER R
GLEANER N
GLEANER S
2016
1
2
3
4
5
6
7
8
9
10
11
12
13
14
15
16
17
18
19
20
21
22
23
24
25
26
A
B
Pot LH (Red)
C
Pot RH (Green)
D
E
7-pole plug
75mm
250mm
400mm

MOUNTING KIT: GLEANER "R/S"

Ref.	Part No.	Description		6 row 4+2row	8 row 4+2x2row	5+2x2 row 60 cm	12 row 50cm	6+2x3 row	12 row	16 row
1.	1.326.519	Blocking plate left – R62-R72		1	1	1	1	1	1	1
1.	1.326.520	Blocking plate right – R62-R72		1	1	1	1	1	1	1
2.	1.326.521	Blocking plate left – R42-R52		1	1	1	1	1	1	1
2.	1.326.522	Blocking plate right – R42-R52		1	1	1	1	1	1	1
3.	1.326.504	Filler welded – without LTM only		1	1	1	1	1	1	1
4.	1.326.507	Filler welded		1	1	1	1	1	1	1
5.	1.353.411	Auger flight extension right 22" pitch		1	1	1	1	1	1	1
6.	1.353.412	Half filler 22" pitch		2	2	2	2	3	3	3
7.	234.364.0	Washer		2	2	2	2	-	-	-
8.	1.353.409	Auger flight extension left weld.22"pitch		1	1	1	1	-	-	-
9.	1.353.413	Flight extension complete 22" pitch (items 5,6,7,8)		1	1	1	1	-	-	-
10.	1.327.662	Yoke - 21spline (P400)		2	2	2	2	2	2	2
10.	1.327.486	Yoke - 21spline (P500)	2016-2017.	-	-	-	2	2	2	2
11.		Cardan shaft See page 1.		-	-	-	-	-	-	-
12.	1.327.638	Wire		1	1	1	1	1	1	1
13.	1.328.540	Rubber plate R42 - R52	->2019	2	2	2	2	2	2	2
13.	1.372.954	Rubber plate R42 - R52	2020 ->	2	2	2	2	2	2	2
14.	1.328.541	Flat iron R42 - R52		2	2	2	2	2	2	2
15.	1.355.478	Flight extension complete 22" pitch (items 5,6,16,17,18,19,20)		-	-	-	-	1	1	1
16.	1.355.473	Auger flight extension left weld.22"pitch		-	-	-	-	1	1	1
17.	1.355.553	Flat iron		-	-	-	-	2	2	2
18.	1.355.464	Auger flight extension left weld.22"pitch		-	-	-	-	1	1	1
19.	1.353.571	Half filler		-	-	-	-	1	1	1
20.	1.353.573	Flat iron		-	-	-	-	2	2	2
21.	1.355.920	Rubber plate R62 - R72	->2019	2	2	2	2	2	2	2
21.	1.372.955	Rubber plate R62 - R72	2020 ->	2	2	2	2	2	2	2
22.	1.355.921	Flat iron R62 - R72		2	2	2	2	2	2	2
23.	1.326.532	Cleaning angle	->2015	1	1	1	1	1	1	1
23.	1.372.230	Cleaning angle	2016 ->	1	1	1	1	1	1	1
24.	1.355.966	Harness for AGCO multicoupler		1	1	1	1	1	1	1
25.	1.332.781	Cleaning angle – R42-R52	->2015	1	1	1	1	1	1	1
25.	1.372.229	Cleaning angle – R42-R52	2016 ->	1	1	1	1	1	1	1
26.	1.332.782	Cleaning angle – R62-R72	->2015	1	1	1	1	1	1	1
26.	1.372.228	Cleaning angle – R62-R72	2016 ->	1	1	1	1	1	1	1
-	1.353.414	Mounting kit (items 1,2,3,4,9,13,14,21,22,23,25,26)		1	1	1	1	-	-	-
-	1.355.479	Mounting kit (items 1,2,3,4,13,14,15,21,22,23,25,26)		-	-	-	-	1	1	1
-	1.372.681	Window Frame Completion Bundle (items 1, 4,21,22,23,26)		1	1	1	1	1	1	1

Note for item 12: For those combines which have no multipoint connection.

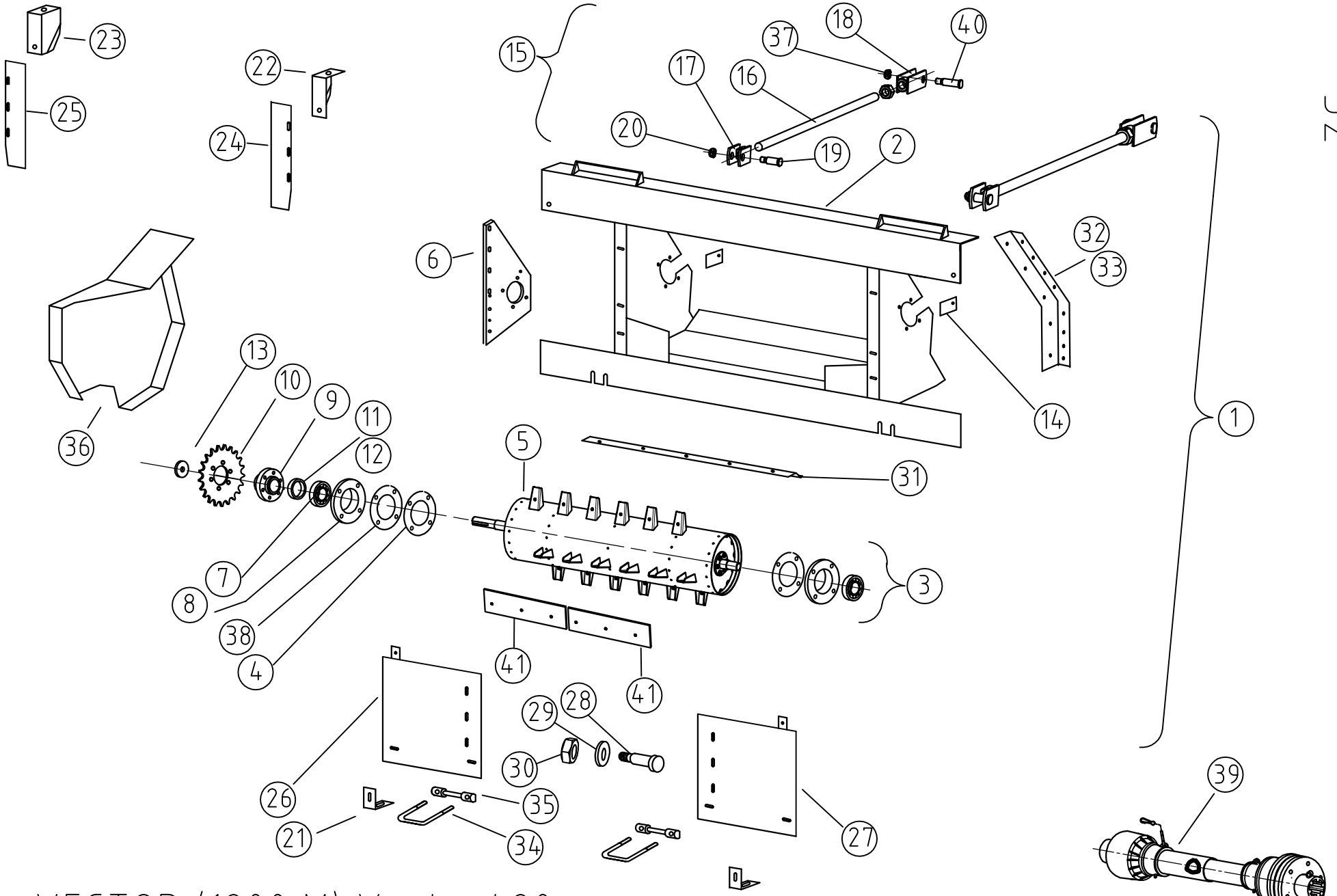

VECTOR (1200 M) Vector420
2016

MOUNTING KIT: Vector 1200M;Vector 420

Ref.	Part Number	Description		All models
1.	1.329.859	Frame assy (items 2,3,15,21-36)		1
2.	1.329.860	Frame weld		1
3.	1.329.866	Feeding cylinder assy (items 4-14, 38, 41)		1
4.	1.329.077	Shim		2
5.	1.329.867	Feeding cylinder weld		1
6.	1.329.344	Console		1
7.	87000004049	Y Bearing REA 40 NPPB		2
8.	1.314.392	Bearing housing		2
9.	1.320.173	Hub		1
10.	1.329.099	Sprocket z=35		1
11.	1.310.936	Spacer l=8		1
12.	1.310.898	Spacer l=30		1
13.	1.301.302	Washer		1
14.	1.329.362	Flat iron		2
15.	1.329.847	Bracket assy (items 16-20, 37, 40)		2
16.	1.329.854	Spindle M24		2
17.	1.329.848	Fork weld		2
18.	1.329.852	Fork II weld		2
19.	1.329.855	Pin		2
20.	74916000066	Lock nut M16		4
21.	1.329.274	Retaining plate		2
22.	1.329.275	Inlet left		1
23.	1.329.276	Inlet right		1
24.	1.329.277	Closing plate left		1
25.	1.329.278	Closing plate right		1
26.	1.329.304	Closing plate left weld		1
27.	1.329.305	Closing plate right weld		1
28.	1.329.856	Pin I		1
29.	71424000060	Washer M24		1
30.	74924000066	Lock nut M24		1
31.	1.329.865	Closing plate		1
32.	1.329.360	Closing plate left		1
33.	1.329.361	Closing plate right		1
34.	1.301.068	Retainer		2
35.	1.301.069	Retainer pin		2
36.	1.329.363	Cover plate		1
37.	73524000066	Hex bolt M24		4
38.	1.329.345	Shim		1
39.	-	PTO drive shaft (See page 1 !)		
40.	1.329.893	Pin		2
41.	1.332.849	Rubber plate	2016-2019.	8
41.	1.372.962	Rubber plate	2020→	8

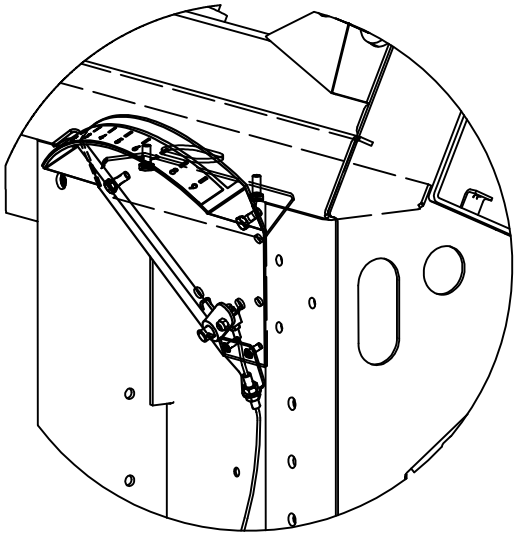

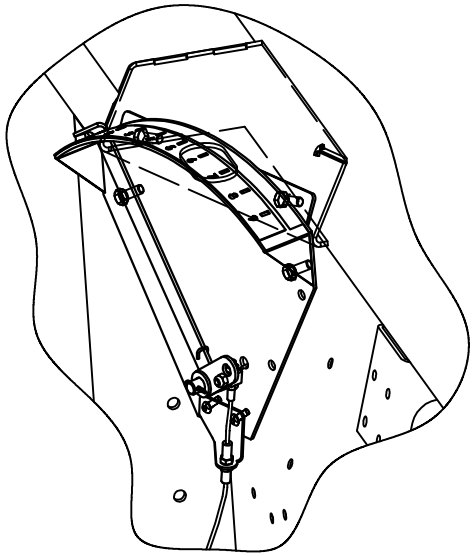

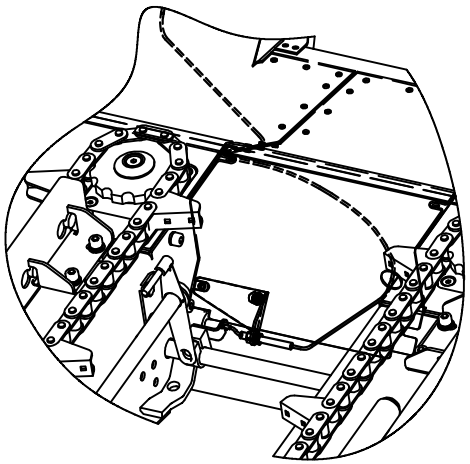

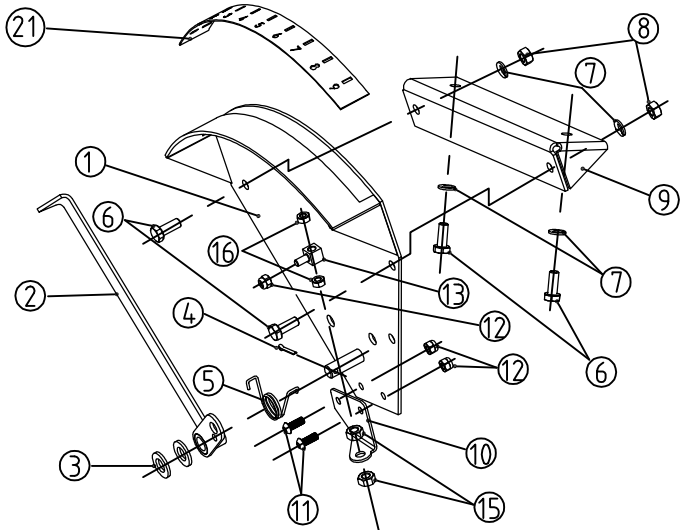

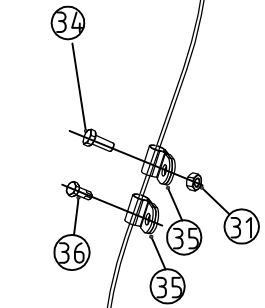

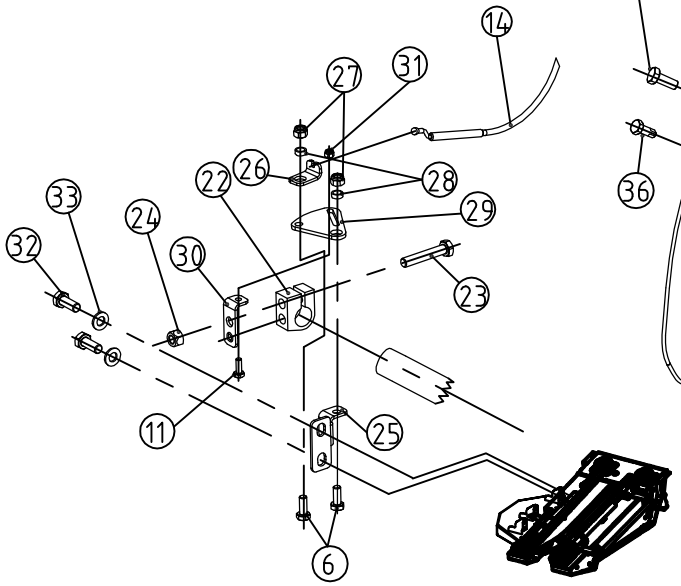

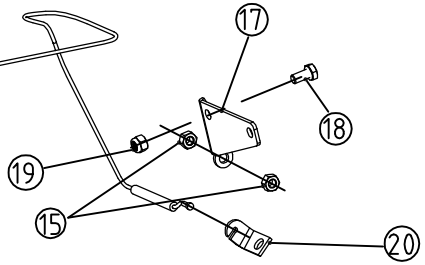

1.379.727 Rigid 20"-22" Fix 50-56cm
1.379.464 Rigid 28"-30" Fix 70-76,2cm
1.372.835 Rigid 38" Fix 96,5cm
1.379.140 Folding Csukható

2020

SNAPPING PLATE INDICATOR

Ref	Part Number	Description	Rigid 50-56 cm	Rigid 70-76,2 cm	Rigid 96,5 cm	Folding
1.	1.319.165	Indicator weld.	1	1	1	1
2.	1.319.171	Pointer weld.	1	1	1	1
3.	71412000060	Washer M12 DIN 125	2	2	2	2
4.	72404002860	Cotter pin 4x28 DIN94	1	1	1	1
5.	96792685501	Spring	5	1	1	1
6.	79408002066	Hex. Head screw M8x20 DIN933/8.8	4	4	4	4
7.	91623938761	Washer A8	6	8	8	8
8.	70808000026	Rivet nut M8	2	2	2	2
9.	1.327.120	Holder	-	-	-	1
9.	1.379.306	Holder	-	1	1	-
10.	1.378.856	Console	1	1	1	1
11.	81106001663	Round head screw M6x16 ISO7380/10.9	2	2	2	2
12.	70706000066	Lock nut M6 DIN980/8.8	2	3	3	3
13.	1.378.855	Pivot	1	1	1	1
14.	1.378.853	Indicator cable	-	1	-	1
14.	1.379.747	Indicator cable	1	-	1	-
15.	73508000066	Hex. nut M8 DIN934/8.8	2	6	6	6
16.	73506000066	Hex. nut M6 DIN934/8.8	2	2	2	2
17.	1.378.851	Console	-	1	1	1
18.	79408001666	Hex. Head screw M8x16 DIN933/8.8	-	1	1	1
19.	70708000066	Lock nut M8 DIN934/8.8	-	1	1	1
20.	1.378.852	Console	-	1	1	1
21.	1.327.131	Indicator label	1	1	1	1
22.	1.308.195	Retainer	1	-	-	-
23.	79410005566	Hex. Head screw M10x55 DIN933/8.8	1	-	-	-
24.	70710000066	Lock nut M10 DIN980/8.8	1	-	-	-
25.	1.379.733	Console	1	-	-	-
26.	1.379.738	Console	1	-	-	-
27.	74908000066	Hex nut - plastic insert M8 DIN 985/8.8	2	-	-	-
28.	1.329.747	Bushing	2	-	-	-
29.	1.379.737	Adjuster disk	1	-	-	-
30.	1.379.736	Console weld	1	-	-	-
31.	74906000066	Hex nut - plastic insert M6 DIN 985/8.8	10	-	-	-
32.	79410002066	Hex bolt -M10x20 - DIN933/8.8	6	6	6	6
33.	91623938861	Spring Washer- A10	6	6	6	6
34.	79406001666	Hex. Head screw M6x16 DIN933/8.8	9	-	-	-
35.	96792401700	Clamp RSGU 6x15	10	-	-	-
36.	81306301966	Self cutting hex bolt - M6,3x19 DIN7540	3	-	-	-
	1.379.727	Mechanical indicator cpl. (items 1-8, 10-16, 21-31 and 34-36)	1	-	-	-
	1.379.464	Mechanical indicator cpl. (items 1-21)	-	1	-	-
	1.372.835	Mechanical indicator cpl. (items 1-21)	-	-	1	-
	1.379.140	Mechanical indicator cpl. (items 1-21)	-	-	-	1

Note: item 32 and 33 are the same as item 31 and 30 on page 16/A

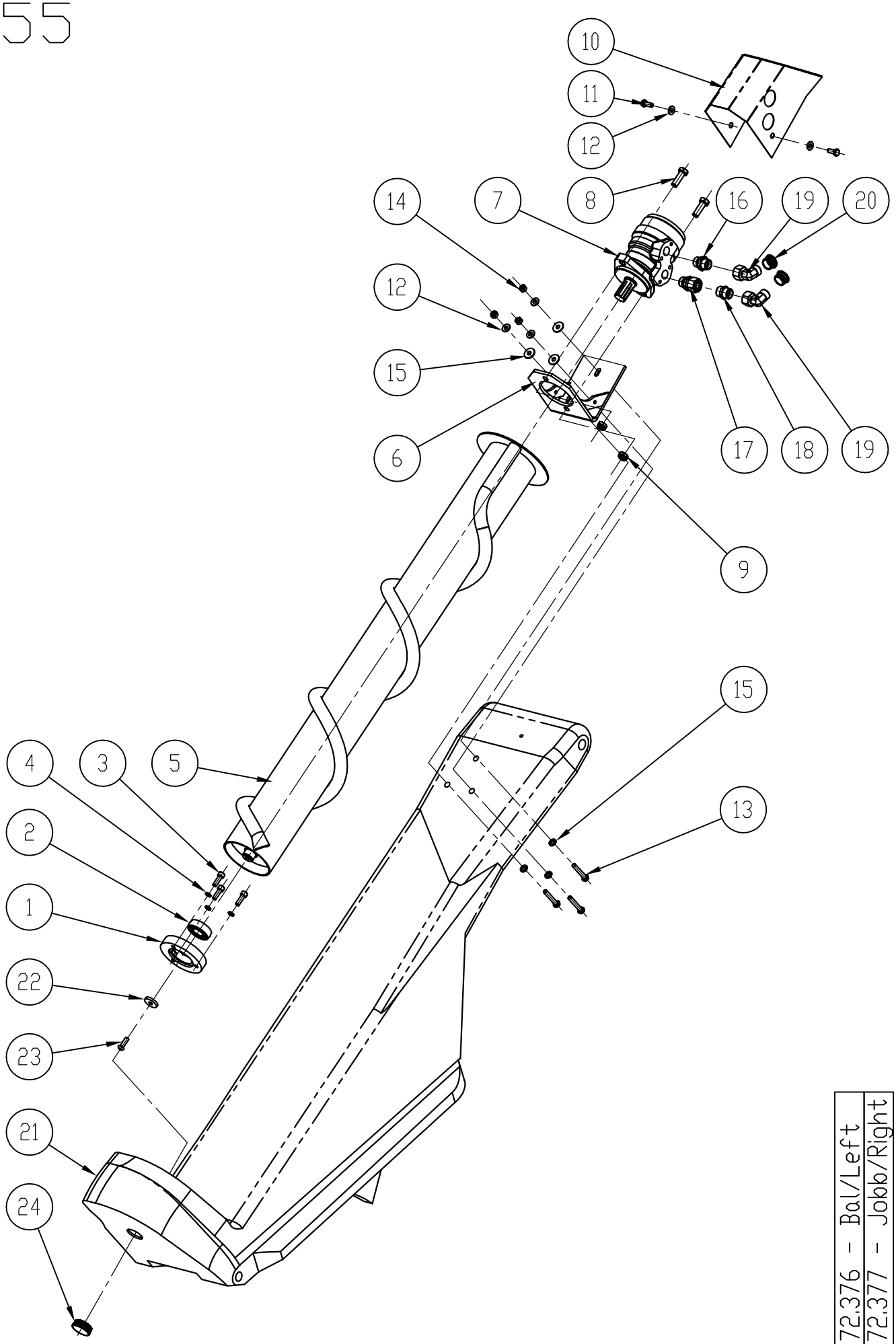

1.372.376 - Bal/Left
1.372.377 - Jobb/Right

ROTARY END DIVIDER (RED)

Ref.	Part Number	Description		All models
1	1.378.822	Bearing housing		2
2	87030620514	Bearing 6205-2RS		2
3	80208002566	Hex socket head cap bolt M8x20 - DIN912/8.8		6
4	71808000060	Spring washer M8- DIN7980		6
5	1.378.808	Rotary divider - LH		1
5	1.378.809	Rotary divider - RH		1
6	1.378.825	Bracket weldid		2
7	1.378.835	Hydraulic motor MR50 SHD		2
8	79412003566	Hex bolt M12x35 - DIN933/8.8		4
9	74912000066	Hex nut - plastic insert M12 - DIN985/8.		4
10	1.378.830	Cover - LH		1
10	1.378.831	Cover - RH		1
11	79408002066	Hex bolt M8x20 - DIN933/8.8		4
12	91623938761	Spring washer - A8		10
13	79408005066	Hex bolt M8x50 - DIN933/8.8		6
14	74908000066	Hex nut M8 - DIN934		6
15	237.816.0	Washer M8		12
16	1.378.858	Fitting GE 15 LREDOMD		2
17	1.378.859	Fitting EVGE 15 LRED		2
18	1.378.861	Fitting GE 15 LCF		2
19	1.378.860	Fitting elbow - EVW 15 LOMD		4
20	1.322.794	Rubber plug		4
21	1.377.535	Outer divider - LH, WHITE		1
21	1.377.535 .1	Outer divider - LH, CASE IH RED		1
21	1.377.535.2	Outer divider - LH, NH YELLOW		1
21	1.377.535.3	Outer divider - LH, JD GREEN		1
21	1.377.535.5	Outer divider - LH, CLAAS GREEN		1
21	1.377.535.6	Outer divider - LH, SDF GREEN		1
21	1.377.535.7	Outer divider - LH, AGCO RED		1
21	1.377.535.8	Outer divider - LH, CHALLENGER YELLOW		1
21	1.377.535.9	Outer divider - LH, GLEANER GRAY		1
21	1.377.535.10	Outer divider - LH, CHASSIS GRAY		1
21	1.377.536	Outer divider - RH, WHITE		1
21	1.377.536.1	Outer divider - RH, CASE IH RED		1
21	1.377.536.2	Outer divider - RH, NH YELLOW		1
21	1.377.536.3	Outer divider - RH, JD GREEN		1
21	1.377.536.5	Outer divider - RH, CLAAS GREEN		1
21	1.377.536.6	Outer divider - RH, SDF GREEN		1
21	1.377.536.7	Outer divider - RH, AGCO RED		1
21	1.377.536.8	Outer divider - RH, CHALLENGER YELLOW		1
21	1.377.536.9	Outer divider - RH, GLEANER GRAY		1
21	1.377.536.10	Outer divider - RH, CHASSIS GRAY		1
22	1.314.695	Washer	2015 -2019.	2
23	78208002563	Hex socket button-head bolt M8x25 ISO7380/10.9	2015 -2019.	2
24	54000111532	Plastic plug D=45	2015 ->	2
	1.372.376	Rotary divider assy.- LH with cover		1
	1.372.376.1	Rotary divider assy.- LH, CASE IH RED with cover		1
	1.372.376.2	Rotary divider assy.- LH, NH YELLOW with cover		1
	1.372.376.3	Rotary divider assy.- LH, JD GREEN with cover		1
	1.372.376..5	Rotary divider assy.- LH, CLAAS GREEN with cover		1
	1.372.376.6	Rotary divider assy.- LH, SDF GREEN with cover		1
	1.372.376.7	Rotary divider assy.- LH, AGCO RED with cover		1
	1.372.376.8	Rotary divider assy.- LH, CHALLENGER YELLOW with cover		1
	1.372.376.9	Rotary divider assy.- LH, GLEANER GRAY with cover		1
	1.372.376.10	Rotary divider assy.- LH, CHASSIS GRAY with cover		1
	1.372.377	Rotary divider assy.- RH with cover		1
	1.372.377.1	Rotary divider assy.- RH, CASE IH RED with cover		1
	1.372.377.2	Rotary divider assy.- RH, NH YELLOW with cover		1
	1.372.377.3	Rotary divider assy.- RH, JD GREEN with cover		1
	1.372.377.5	Rotary divider assy.- RH, CLAAS GREEN with cover		1
	1.372.377.6	Rotary divider assy.- RH, SDF GREEN with cover		1
	1.372.377.7	Rotary divider assy.- RH, AGCO RED with cover		1
	1.372.377.8	Rotary divider assy.- RH, CHALLENGER YELLOW with cover		1
	1.372.377.9	Rotary divider assy.- RH, GLEANER GRAY with cover		1
	1.372.377.10	Rotary divider assy.- RH, CHASSIS GRAY with cover		1

John Deere:

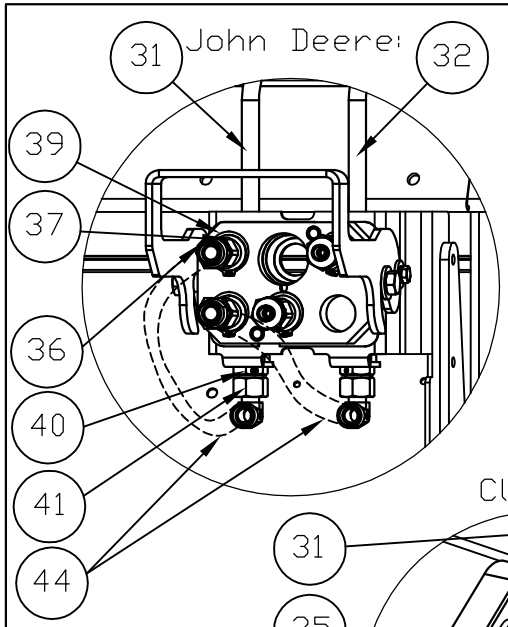

Massey Ferguson:

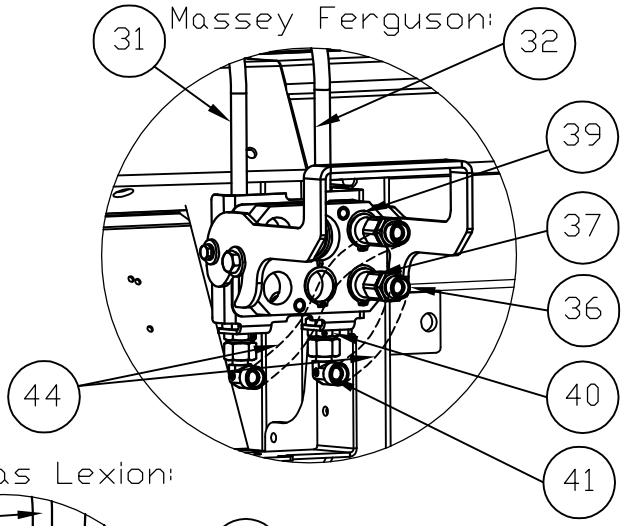

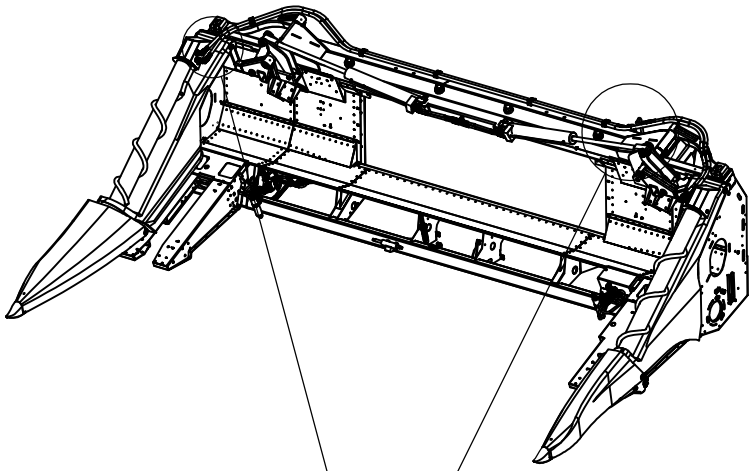

Claas Lexion:

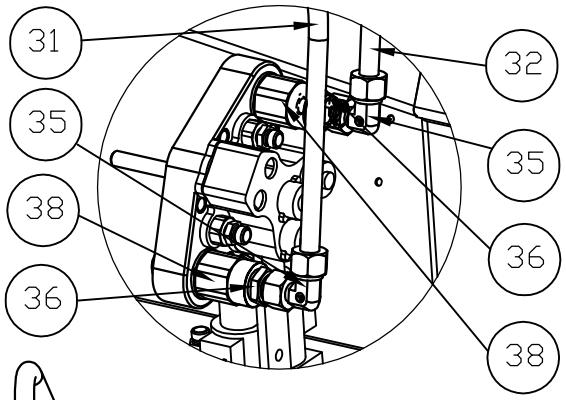

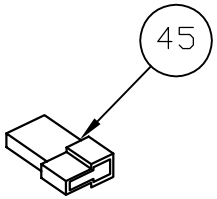

New Holland:

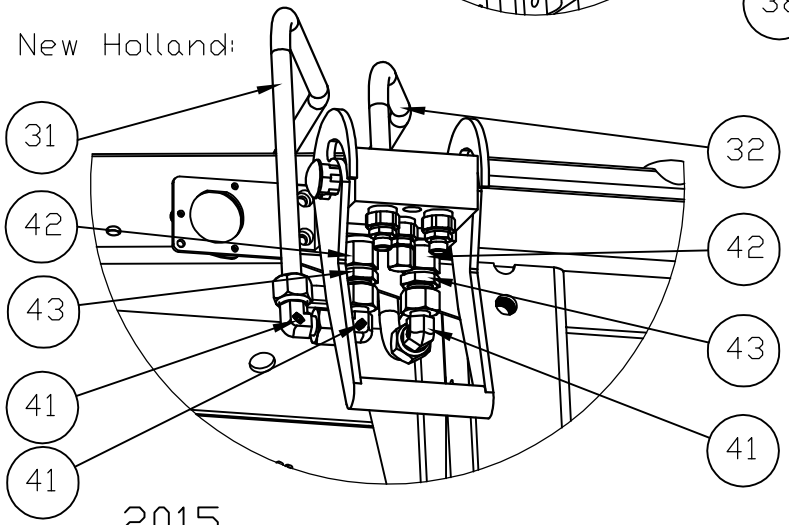

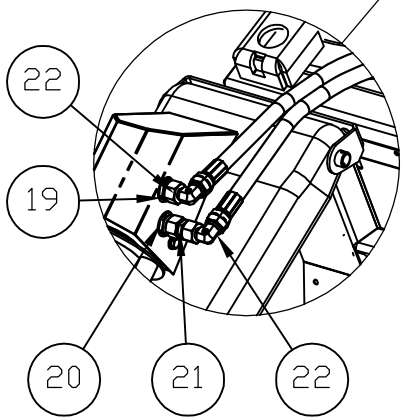

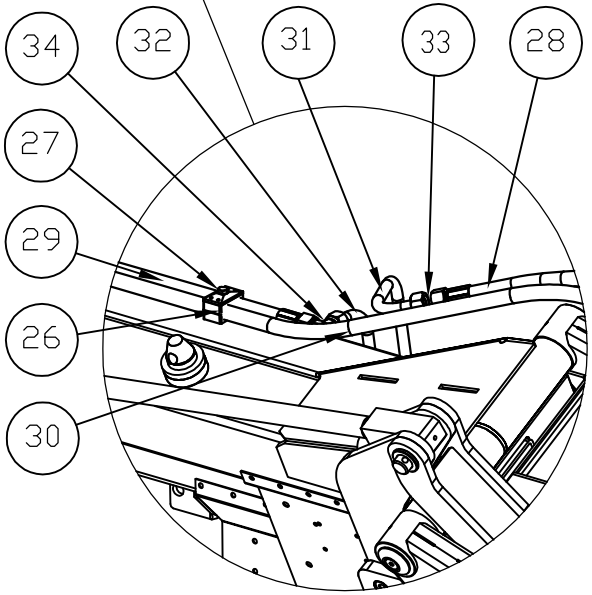

2015

ROTARY END DIVIDER (RED) HYDRAULIC ->2015

Ref.	Part Number	Description		4+2R 76,2 cm	4+2x2R 76,2cm	5+2x2R 60 cm	6+2x3R 76,2cm	6R 70 cm	6R 76.2 cm	8R 50cm	8R 56cm	8R 70cm	8R 76.2cm	12R 50cm	12R 56cm	12R 70 cm	12R 76.2 cm	16R 76.2 cm
19	1.378.858	Fitting GE 15 LREDOMD		2	2	2	2	2	2	2	2	2	2	2	2	2	2	2
20	1.378.859	Fitting EVGE 15 LRED		2	2	2	2	2	2	2	2	2	2	2	2	2	2	2
21	1.378.861	Fittingr GE 15 LCF		2	2	2	2	2	2	2	2	2	2	2	2	2	2	2
22	1.378.860	Fitting - 90 deg EVW 15 LOMD		4	4	3	4	4	4	4	4	4	4	4	4	4	4	4
26	97308040102	Clamp 18		8	8	12	10	8	8	8	8	8	8	8	8	8	8	12
27	79408004066	Hex bolt M8x40 - DIN933/8.8		8	8	12	10	8	8	8	8	8	8	8	8	8	8	12
28	1.379.529	Hydraulic hose - LEXION/JD/MF/NH	→2015	1	-	-	-	-	-	-	-	-	-	-	-	-	-	-
28	1.331.808	Hydraulic hose - LEXION/JD/MF/NH	2016→	1	-	-	-	-	-	-	-	-	-	-	-	-	-	-
28	1.379.551	Hydraulic hose - LEXION/JD/MF/NH		-	-	-	1	-	-	-	-	-	-	-	-	-	-	-
28	1.379.571	Hydraulic hose - LEXION/JD/MF/NH		-	-	-	-	2	2	-	-	2	2	-	-	2	2	-
28	1.379.568	Hydraulic hose - LEXION/JD/MF/NH		-	-	-	-	-	-	-	-	-	1	-	-	-	-	-
28	1.379.574	Hydraulic hose - LEXION/JD/MF/NH		-	-	-	-	-	-	-	-	-	-	-	-	-	1	-
28	1.379.682	Hydraulic hose - LEXION/JD/MF/NH		-	-	-	-	-	-	-	-	-	-	-	-	-	-	1
28	1.379.758	Hydraulic hose - LEXION/JD/MF/NH		-	-	-	-	1	-	-	-	-	-	-	-	-	-	-
28	1.379.755	Hydraulic hose - LEXION/JD/MF/NH		-	-	-	-	-	-	-	-	1	-	-	-	-	-	-
28	1.379.761	Hydraulic hose - LEXION/JD/MF/NH		-	-	-	-	-	-	-	-	-	-	-	-	1	-	-
28	1.373.286	Hydraulic hose - LEXION/JD/MF/NH		-	-	-	-	-	-	1	-	-	-	-	-	-	-	-
28	1.373.283	Hydraulic hose - LEXION/JD/MF/NH		-	-	-	-	-	-	-	1	-	-	-	-	-	-	-
28	1.373.280	Hydraulic hose - LEXION/JD/MF/NH		-	-	1	-	-	-	-	-	-	-	1		-	-	-
28	1.373.277	Hydraulic hose - LEXION/JD/MF/NH		-	1*	-	-	-	-	-	-	-	-	-	1	-	-	-
29	1.379.530	Hydraulic hose - LEXION/JD/MF/NH		1	-	-	-	-	-	-	-	-	-	-	-	-	-	-
29	1.379.545	Hydraulic hose - LEXION/JD/MF/NH	→2015	-	1	-	-	-	-	-	-	-	-	-	-	-	-	-
29	1.379.553	Hydraulic hose- LEXION/JD/MF/NH		-	-	-	1	-	-	-	-	-	-	-	-	-	-	-
29	1.379.573	Hydraulic hose - LEXION/JD/MF/NH		-	-	-	-	-	1	-	-	-	-	-	-	-	-	-
29	1.379.570	Hydraulic hose - LEXION/JD/MF/NH		-	-	1	-	-	-	-	-	-	1	-	-	-	-	-
29	1.379.576	Hydraulic hose - LEXION/JD/MF/NH		-	-	-	-	-	-	-	-	-	-	-	-	-	1	-
29	1.379.684	Hydraulic hose - LEXION/JD/MF/NH		-	-	-	-	-	-	-	-	-	-	-	-	-	-	1
29	1.379.760	Hydraulic hose - LEXION/JD/MF/NH		-	-	-	-	1	-	-	-	-	-	-	-	-	-	-
29	1.379.757	Hydraulic hose - LEXION/JD/MF/NH		-	-	-	-	-	-	-	-	1	-	-	-	-	-	-
29	1.379.763	Hydraulic hose - LEXION/JD/MF/NH		-	-	-	-	-	-	-	-	-	-	-	-	1	-	-
29	1.373.285	Hydraulic hose - LEXION/JD/MF/NH		-	-	-	-	-	-	1	-	-	-	-	-	-	-	-
29	1.373.282	Hydraulic hose - LEXION/JD/MF/NH		-	-	-	-	-	-	-	1	-	-	-	-	-	-	-
29	1.373.279	Hydraulic hose - LEXION/JD/MF/NH		-	1*	-	-	-	-	-	-	-	-	1		-	-	-
29	1.373.276	Hydraulic hose - LEXION/JD/MF/NH		-	-	-	-	-	-	-	-	-	-	-	1	-	-	-
30	1.379.528	Hydraulic hose - LEXION/JD/MF/NH	→2015	1	-	-	-	-	-	-	-	-	-	-	-	-	-	-
30	1.379.763	Hydraulic hose - LEXION/JD/MF/NH	2016→	1	-	-	-	-	-	-	-	-	-	-	-	-	-	-
30	1.379.542	Hydraulic hose - LEXION/JD/MF/NH	→2015	-	1	-	-	-	-	-	-	-	-	-	-	-	-	-
30	1.379.552	Hydraulic hose - LEXION/JD/MF/NH		-	-	-	1	-	-	-	-	-	-	-	-	-	-	-
30	1.379.572	Hydraulic hose - LEXION/JD/MF/NH		-	-	-	-	-	1	-	-	-	-	-	-	-	-	-
30	1.379.569	Hydraulic hose - LEXION/JD/MF/NH		-	-	1	-	-	-	-	-	-	1	-	-	-	-	-
30	1.379.575	Hydraulic hose - LEXION/JD/MF/NH		-	-	-	-	-	-	-	-	-	-	-	-	-	1	-
30	1.379.683	Hydraulic hose - LEXION/JD/MF/NH		-	-	-	-	-	-	-	-	-	-	-	-	-	-	1
30	1.379.759	Hydraulic hose - LEXION/JD/MF/NH		-	-	-	-	1	-	-	-	-	-	-	-	-	-	-
30	1.379.756	Hydraulic hose - LEXION/JD/MF/NH		-	-	-	-	-	-	-	-	1	-	-	-	-	-	-

Note: * only for machines with higher serial number than xxxxx16xxx

John Deere:

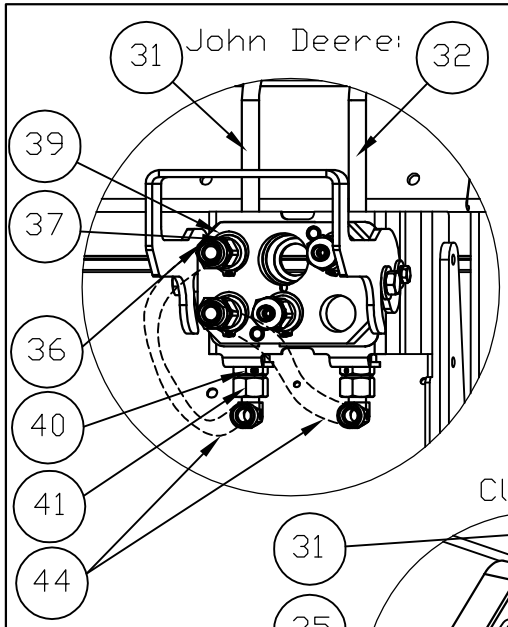

Massey Ferguson:

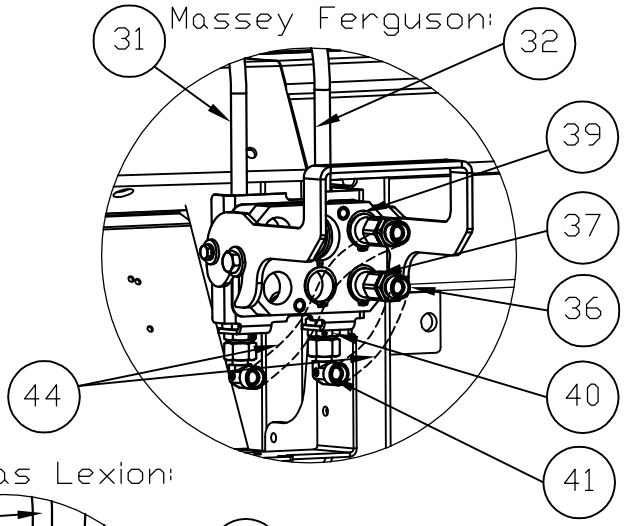

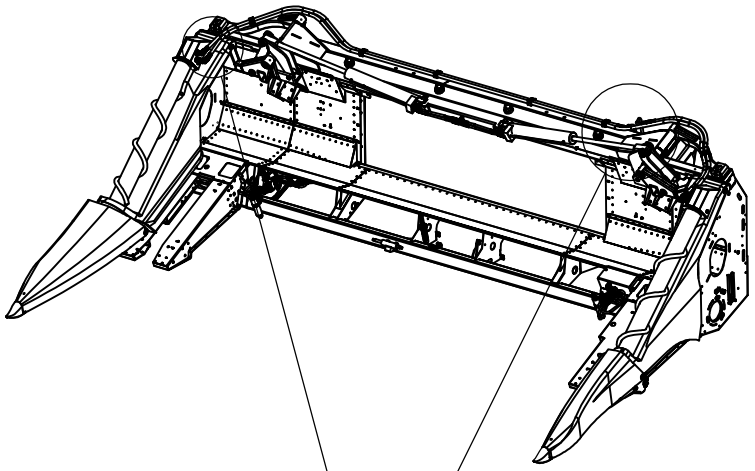

Claas Lexion:

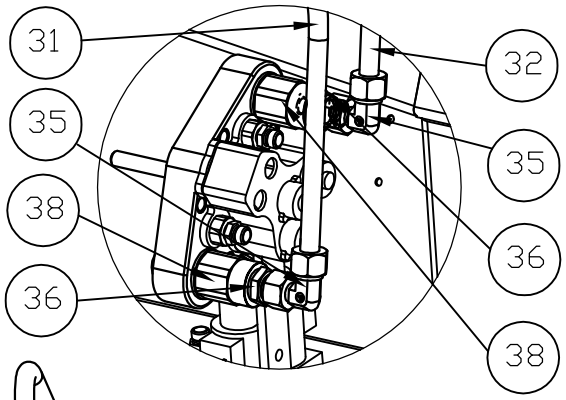

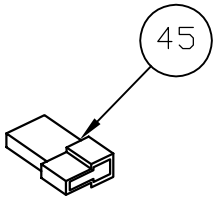

New Holland:

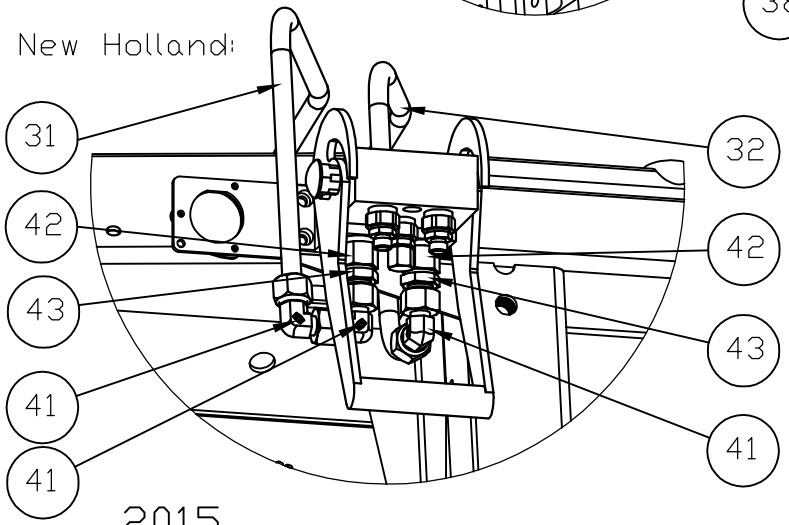

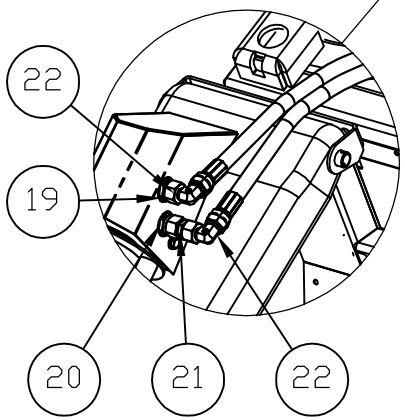

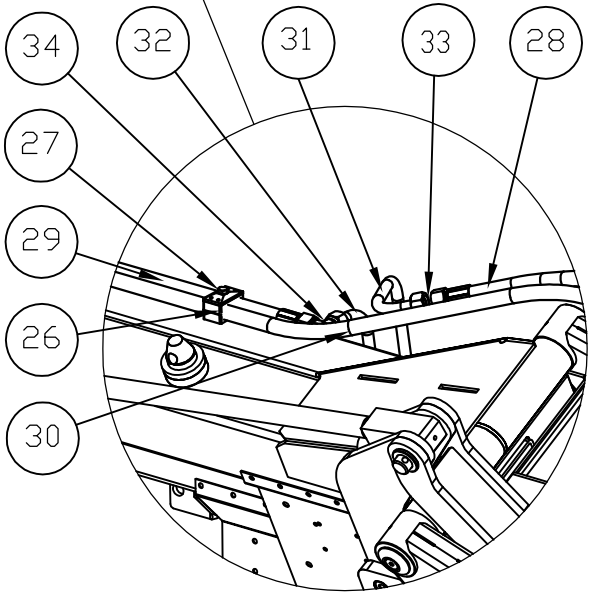

2015

ROTARY END DIVIDER (RED) HYDRAULIC ->2015

Ref.	Part Number	Description		4+2R 76,2 cm	4+2x2R 76,2cm	5+2x2R 60 cm	6+2x3R 76,2cm	6R 70 cm	6R 76.2 cm	8R 50cm	8R 56cm	8R 70cm	8R 76.2cm	12R 50cm	12R 56cm	12R 70 cm	12R 76.2 cm	16R 76.2 cm
30	1.379.762	Hydraulic hose - LEXION/JD/MF/NH		-	-	-	-	-	-	-	-	-	-	-	-	1	-	-
30	1.373.284	Hydraulic hose - LEXION/JD/MF/NH		-	-	-	-	-	-	1	-	-	-	-	-	-	-	-
30	1.373.281	Hydraulic hose - LEXION/JD/MF/NH		-	-	-	-	-	-	-	1	-	-	-	-	-	-	-
30	1.373.278	Hydraulic hose - LEXION/JD/MF/NH		-	1*	-	-	-	-	-	-	-	-	1	-	-	-	-
30	1.373.275	Hydraulic hose - LEXION/JD/MF/NH		-	-	-	-	-	-	-	-	-	-	-	1	-	-	-
31	1.379.526	Hydraulic tube - LEXION	→2015	1	1	-	-	-	-	-	-	-	-	-	-	-	-	-
31	1.379.554	Hydraulic tube - LEXION	→2015	-	-	-	1	-	-	-	-	-	-	-	-	-	-	-
31	1.379.527	Hydraulic tube - JD/MF	→2015	1	1	-	-	-	-	-	-	-	-	-	-	-	-	-
31	1.379.539	Hydraulic tube - NH	→2015	1	1	-	1	-	-	-	-	-	-	-	-	-	-	-
31	1.379.563	Hydraulic tube - LEXION		-	-	-	-	1	1	-	-	1	1	-	-	1	1	-
31	1.379.681	Hydraulic tube - LEXION		-	-	-	-	-	-	1	1	-	-	1	1	-	-	1
31	1.379.565	Hydraulic tube - JD/MF		-	-	-	-	1	1	-	-	-	1	-	-	-	1	-
31	1.373.287	Hydraulic tube - JD/MF		-	-	-	-	-	-	1	1	-	-	1	1	-	-	1
31	1.379.566	Hydraulic tube - NH		-	-	-	-	1	1			1	1	-	-	1	1	-
31	1.373.289	Hydraulic tube - NH		-	-	-	-	-	-	1	1	-	-	1	1	-	-	1
32	1.379.523	Hydraulic tube - LEXION	→2015	1	1	-	1	-	-			-	-	-	-	-	-	-
32	1.379.532	Hydraulic tube - JD/MF	→2015	1	1	-	1	-	-	-	-	-	-	-	-	-	-	-
32	1.379.555	Hydraulic tube - JD/MF	→2015	-	-	-	1	-	-	-	-	-	-	-	-	-	-	-
32	1.379.538	Hydraulic tube - NH	→2015	1	1	-	-	-	-	-	-	-	-	-	-	-	-	-
32	1.379.556	Hydraulic tube - NH		-	-	-	1	-	-	-	-	-	-	-	-	-	-	-
32	1.379.562	Hydraulic tube - LEXION		-	-	-	-	1	1	-	-	1	1	-	-	1	1	-
32	1.379.680	Hydraulic tube - LEXION		-	1*	-	-	-	-	1	1	-	-	1	1	-	-	1
32	1.379.564	Hydraulic tube - JD/MF		-	-	-	-	1	1	-	-	-	1	-	-	-	1	-
32	1.373.288	Hydraulic tube - JD/MF		1*	1*	-	-	-	-	1	1	-	-	1	1	-	-	1
32	1.379.567	Hydraulic tube - NH		-	-	-	-	1	1	-	-	1	1	-	-	1	1	-
32	1.373.290	Hydraulic tube - NH		-	1*	1	-	-	-	1	1	-	-	1	1	-	-	1
33	1.378.861	Fitting GE 15 LCF - LEXION/JD/MF/NH		1	1	-	-	-	-	-	-	-	-	-	-	-	-	-
34	1.379.524	Fitting-90deg W 15LCF - LEXION/JD/MF/NH		1	1	1	2	2	2	2	2	2	2	2	2	2	2	2
35	1.378.860	Fitting - 90 deg EVW 15 LOMD - LEXION/JD/MF		2	2	2	2	2	2	2	2	2	2	2	2	2	2	2
36	1.379.292	Fitting 7/8-14UNF-M22X1.5 - LEXION/JD/MF		2	2	-	2	2	2	2	2	2	2	2	2	2	2	2
37	1.329.890	Fitting - JD/MF		2	2	-	2	2	2	2	2	2	2	2	2	-	2	2
38	91668372320	Fitting - LEXION		2	2	-	2	2	2	2	2	2	2	2	2	2	2	2
39	1.327.052	Retaining ring - externaz - JD/MF		2	2	-	2	2	2	2	2	2	2	2	2	-	2	2
40	1.379.525	Fitting bulg head SV 15-PL - JD/MF		2	2	-	2	2	2	2	2	2	2	2	2	-	2	2
41	1.378.860	Fitting - 90 deg EVW 15 LOMD - NH		3	3	-	3	3	3	3	3	3	3	3	3	3	3	3
42	1.332.515	Fitting 3/4-16UNF - NH		2	2	2	2	2	2	2	2	2	2	2	2	2	2	2
43	1.379.537	Fitting 3/4-16 UNF-M22X1.5A4 - NH		2	2	-	2	2	2	2	2	2	2	2	2	2	2	2
44	1.379.531	Hydraulic hose - JD/MF		2	2	-	2	2	2	2	2	2	2	2	2	2	2	2
45	1.379.630	Short circuit (LEXION, AGCO)		1	1	-	1	1	1	1	1	1	1	1	1	1	1	1

Note: * only for machines with higher serial number than xxxxx16xxx

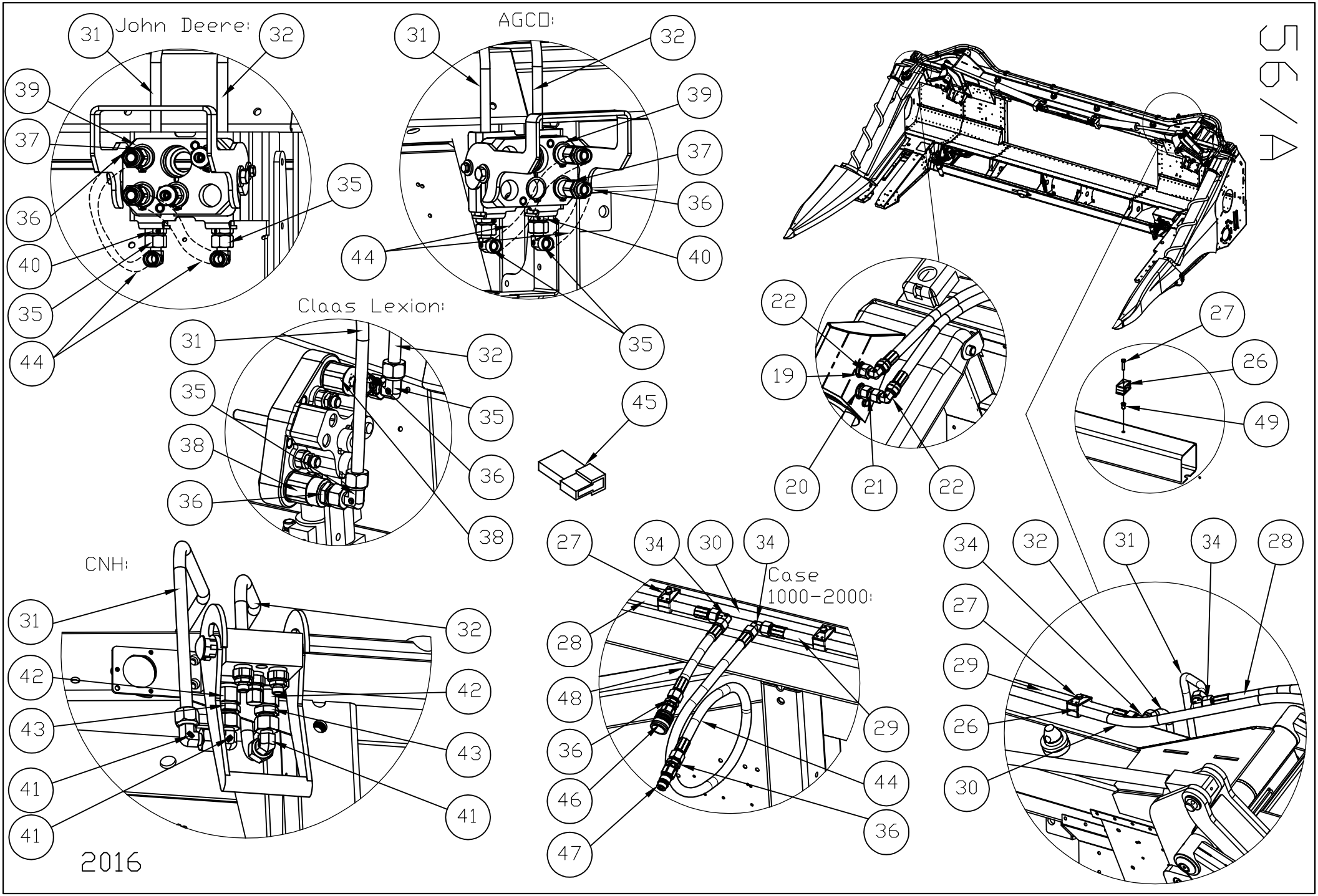
John Deere:
AGCO:
Claas Lexion:
CNH:
Case
1000-2000:
2016
56/A

ROTARY END DIVIDERS (RED) HYDRAULICS 2016->

Ref.	Part Number	Description		4+2R 70cm	4+2R 76,2 - 80cm	4+2x2R 70cm	4+2x2R 76,2- 80cm	5+2x2R 60 cm	6+2x3R 70 cm	6+2x3R 76,2cm	6R 70cm	6R 76.2cm	8R 50cm	8R 56cm	8R 70cm	8R 76.2cm	8R 96,5 cm	12R 50cm	12R 56cm	12R 70cm	12R 76.2cm	16R 70cm	16R 76.2cm
19	1.378.858	Fitting GE 15 LREDOMD		2	2	2	2	2	2	2	2	2	2	2	2	2	2	2	2	2	2	2	2
20	1.378.859	Fitting EVGE 15 LRED		2	2	2	2	2	2	2	2	2	2	2	2	2	2	2	2	2	2	2	2
21	1.378.861	Fittingr GE 15 LCF		2	2	2	2	2	2	2	2	2	2	2	2	2	2	2	2	2	2	2	2
22	1.378.860	Fitting - 90 deg EVW 15 LOMD		4	4	4	4	3	4	4	4	4	4	4	4	4	4	4	4	4	4	4	4
26	97308040102	Clamp 18		8	8	8	8	12	10	10	8	8	8	8	8	8	12	8	8	8	12	12	12
27	79408004066	Hex bolt M8x40 - DIN933/8.8		8	8	8	8	12	10	10	8	8	8	8	8	8	12	8	8	8	12	12	12
28	1.331.808	Hydraulic hose - LEXION/JD/MF/CNH		-	1	-	-	-	-	-	-	-	-	-	-	-	-	-	-	-	-	-	-
28	1.379.551	Hydraulic hose - LEXION/JD/MF/CNH		-	-	-	-	-	-	-	-	-	-	-	-	-	-	-	-	-	1	-	-
28	1.379.568	Hydraulic hose - LEXION/JD/MF/CNH		-	-	-	-	-	-	-	-	-	-	-	1	-	-	-	-	-	-	-	-
28	1.379.682	Hydraulic hose - LEXION/JD/MF/CNH		-	-	-	-	-	-	-	-	-	-	-	-	-	-	-	-	-	-	-	1
28	1.373.286	Hydraulic hose - LEXION/JD/MF/CNH		-	-	-	-	-	-	-	1	-	1	-	-	-	-	-	-	-	-	-	-
28	1.373.283	Hydraulic hose - LEXION/JD/MF/CNH		-	-	-	-	-	-	-	-	-	-	1	-	-	-	-	-	-	-	-	-
28	1.373.280	Hydraulic hose - LEXION/JD/MF/CNH		-	-	-	-	1	-	-	-	-	-	-	-	-	-	1		-	-	-	-
28	1.373.277	Hydraulic hose - LEXION/JD/MF/CNH		-	-	-	1	-	-	-	-	-	-	-	-	-	-	-	1	-	-	-	-
28	1.373.279	Hydraulic hose - LEXION/JD/MF/CNH		-	-	-	-	-	-	-	-	-	-	-	-	-	-	-	-	-	-	1	-
28	1.372.420	Hydraulic hose - LEXION/JD/MF/CNH		-	-	-	-	-	-	-	-	-	-	-	-	1	-	-	-	-	-	-	-
28	1.372.778	Hydraulic hose - LEXION/JD/MF/CNH		-	-	-	-	-	-	-	-	-	-	-	-	-	1	-	-	-	-	-	-
28	1.379.541	Hydraulic hose - LEXION/JD/MF/CNH		-	-	1	-	-	-	-	-	-	-	-	-	-	-	-	-	-	-	-	-
28	1.379.573	Hydraulic hose - LEXION/JD/MF/CNH		-	-	-	-	-	-	1	-	-	-	-	-	-	-	-	-	-	-	-	-
28	1.373.594	Hydraulic hose - LEXION/JD/MF/CNH		1	-	-	-	-	-	-	-	1	-	-	-	-	-	-	-	-	-	-	-
28	1.372.671	Hydraulic hose - LEXION/JD/MF/CNH		-	-	-	-	-	1	-	-	-	-	-	-	-	-	-	-	1	-	-	-
29	1.331.811	Hydraulic hose - LEXION/JD/MF/CNH		1	-	-	-	-	-	-	-	-	-	-	-	-	-	-	-	-	-	-	-
29	1.379.530	Hydraulic hose - LEXION/JD/MF/CNH		-	1	-	-	-	-	-	-	1	-	-	-	-	-	-	-	-	-	-	-
28	1.379.541	Hydraulic hose - LEXION/JD/MF/CNH		-	-	-	1	-	-	-	-	-	-	-	-	-	-	-	-	-	-	-	-
29	1.379.553	Hydraulic hose - LEXION/JD/MF/CNH		-	-	-	-	-	-	-	-	-	-	-	-	-	-	-	-	-	1	-	-
29	1.379.572	Hydraulic hose - LEXION/JD/MF/CNH		-	-	1	-	-	-	-	-	-	-	-	-	-	-	-	-	-	-	-	-
29	1.372.422	Hydraulic hose - LEXION/JD/MF/CNH		-	-	-	-	-	-	-	-	-	-	-	-	1	-	-	-	-	-	-	-
29	1.372.780	Hydraulic hose - LEXION/JD/MF/CNH		-	-	-	-	-	-	-	-	-	-	-	-	-	1	-	-	-	-	-	-
29	1.379.570	Hydraulic hose - LEXION/JD/MF/CNH		-	-	-	-	1	-	-	-	-	-	-	1	-	-	-	-	-	-	-	-
29	1.379.684	Hydraulic hose - LEXION/JD/MF/CNH		-	-	-	-	-	-	-	-	-	-	-	-	-	-	-	-	-	-	-	1
29	1.379.757	Hydraulic hose - LEXION/JD/MF/CNH		-	-	-	-	-	-	-	-	-	-	-	-	-	-	-	-	-	-	-	-
29	1.372.673	Hydraulic hose - LEXION/JD/MF/CNH		-	-	-	-	-	1	-	-	-	-	-	-	-	-	-	-	1	-	-	-
29	1.373.285	Hydraulic hose - LEXION/JD/MF/CNH		-	-	-	-	-	-	-	1	-	1	-	-	-	-	-	-	-	-	-	-
29	1.373.282	Hydraulic hose - LEXION/JD/MF/CNH		-	-	-	-	-	-	-	-	-	-	1	-	-	-	-	-	-	-	-	-
29	1.373.279	Hydraulic hose - LEXION/JD/MF/CNH		-	-	-	1	-	-	-	-	-	-	-	-	-	-	1		-	-	-	-
29	1.373.276	Hydraulic hose - LEXION/JD/MF/CNH		-	-	-	-	-	-	-	-	-	-	-	-	-	-	-	1	-	-	-	-
29	1.372.645	Hydraulic hose - LEXION/JD/MF/CNH		-	-	-	-	-	-	1	-	-	-	-	-	-	-	-	-	-	-	-	-
29	1.372.675	Hydraulic hose - LEXION/JD/MF/CNH		-	-	-	-	-	-	-	-	-	-	-	-	-	-	-	-	-	-	1	-
30	1.379.528	Hydraulic hose - LEXION/JD/MF/CNH		-	-	-	-	-	-	-	-	1	-	-	-	-	-	-	-	-	-	-	-
30	1.379.763	Hydraulic hose - LEXION/JD/MF/CNH		-	1	-	-	-	-	-	-	-	-	-	-	-	-	-	-	-	-	-	-
30	1.372.421	Hydraulic hose - LEXION/JD/MF/CNH		-	-	-	-	-	-	-	-	-	-	-	-	1	-	-	-	-	-	-	-
30	1.372.779	Hydraulic hose - LEXION/JD/MF/CNH		-	-	-	-	-	-	-	-	-	-	-	-	-	1	-	-	-	-	-	-
30	1.379.552	Hydraulic hose - LEXION/JD/MF/CNH		-	-	-	-	-	-	-	-	-	-	-	-	-	-	-	-	-	1	-	-
30	1.372.676	Hydraulic hose - LEXION/JD/MF/CNH		-	-	-	-	-	1	-	-	-	-	-	-	-	-	-	-	-	-	-	-
30	1.379.569	Hydraulic hose - LEXION/JD/MF/CNH		-	-	1	-	1	-	-	-	-	-	-	-	-	-	-	-	-	-	-	-
30	1.379.683	Hydraulic hose - LEXION/JD/MF/CNH		-	-	-	-	-	-	-	-	-	-	-	-	-	-	-	-	-	-	-	1

Note: In case of 4+2R, 4+2x2R and 5x2x2R Headers item 28 joins directly to item 41 (CNH) or to item 40 (JD,MF) or to item 35 (CLAAS) or to item 36 (CASE IH) so item 31 and one pc. of item 34 are not used for these models.
To install the RED's from factory, order the following Items:
1. The correct "Bulkhead fittings"
2. The correct "RED hose kit"
3. "Rotary divider assy" in the correct color, page 55 (2 items LH and RH)

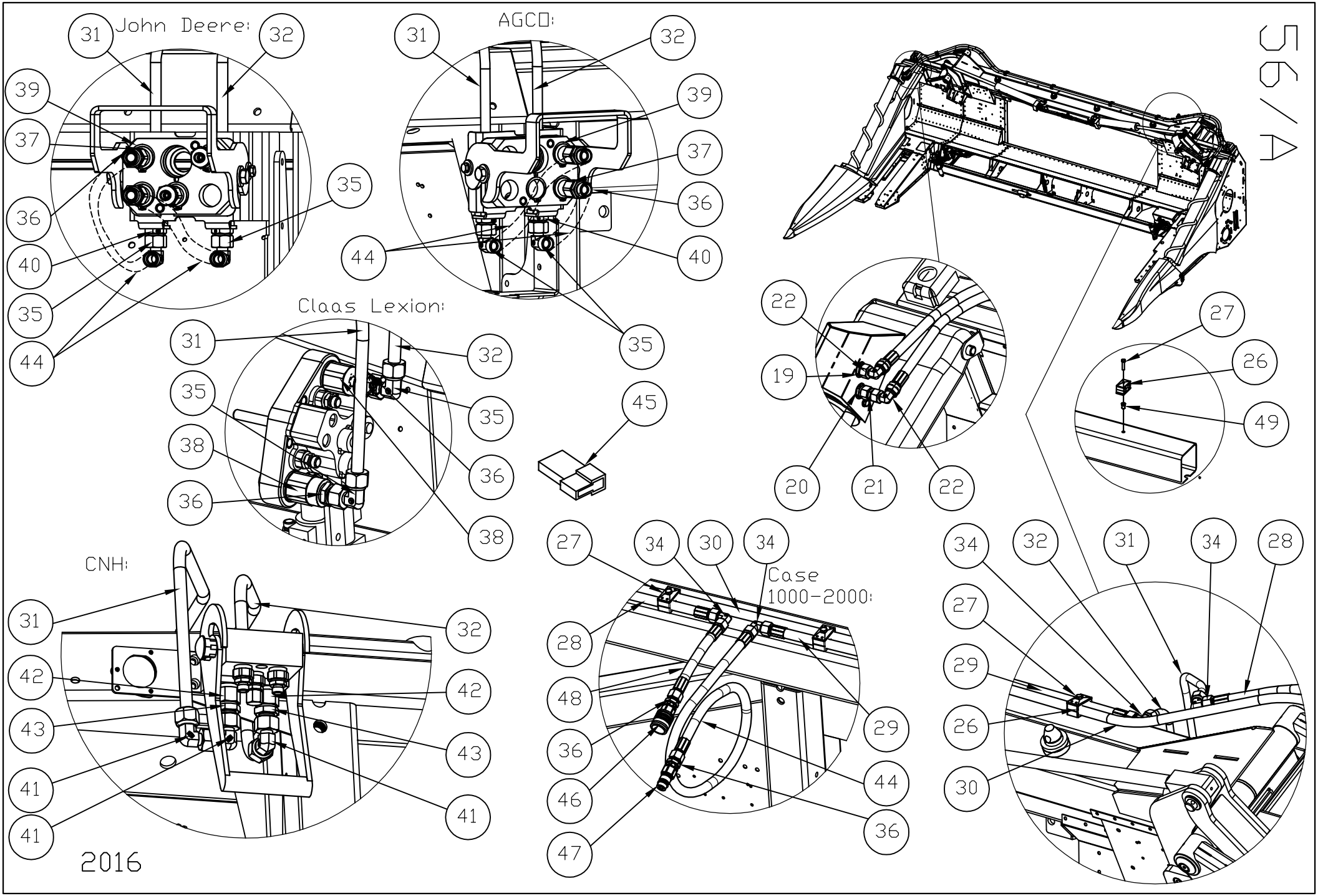
John Deere:
AGCO:
Claas Lexion:
CNH:
Case
1000-2000:
2016
56/A

ROTARY END DIVIDERS (RED) HYDRAULICS 2016->

Ref.	Part Number	Description		4+2R 70cm	4+2R 76,2 - 80cm	4+2x2R 70cm	4+2x2R 76,2- 80cm	5+2x2R 60 cm	6+2x3R 70 cm	6+2x3R 76,2cm	6R 70cm	6R 76.2cm	8R 50cm	8R 56cm	8R 70cm	8R 76.2cm	8R 96,5 cm	12R 50cm	12R 56cm	12R 70cm	12R 76.2cm	16R 70cm	16R 76.2cm
30	1.373.599	Hydraulic hose - LEXION/JD/MF/CNH		-	-	-	-	-	-	-	-	-	-	-	1	-	-	-	-	-	-	-	-
30	1.372.672	Hydraulic hose - LEXION/JD/MF/CNH		-	-	-	-	-	-	-	-	-	-	-	-	-	-	-	-	1	-	-	-
30	1.373.284	Hydraulic hose - LEXION/JD/MF/CNH		-	-	-	-	-	-	-	-	-	1	-	-	-	-	-	-	-	-	-	-	-
30	1.373.281	Hydraulic hose - LEXION/JD/MF/CNH		-	-	-	-	-	-	-	-	-	-	1	-	-	-	-	-	-	-	-	-	-
30	1.373.278	Hydraulic hose - LEXION/JD/MF/CNH		-	-	-	1	-	-	-	-	-	-	-	-	-	-	1	-	-	-	-	-	-
30	1.373.275	Hydraulic hose - LEXION/JD/MF/CNH		-	-	-	-	-	-	-	-	-	-	-	-	-	-	-	1	-	-	-	-	-
30	1.373.276	Hydraulic hose - LEXION/JD/MF/CNH		1	-	-	-	-	-	-	-	-	-	-	-	-	-	-	-	-	-	-	-	-
30	1.372.644	Hydraulic hose - LEXION/JD/MF/CNH		-	-	-	-	-	-	1	-	-	-	-	-	-	-	-	-	-	-	-	-	-
30	1.372.670	Hydraulic hose - LEXION/JD/MF/CNH		-	-	-	-	-	-	-	1	-	-	-	-	-	-	-	-	-	-	-	-	-
30	1.372.674	Hydraulic hose - LEXION/JD/MF/CNH		-	-	-	-	-	-	-	-	-	-	-	-	-	-	-	-	-	-	1	-	-
31	1.379.681	Hydraulic tube - LEXION		-	-	-	-	-	1	1	1	1	1	1	1	1	1	1	1	1	1	1	1	1
31	1.373.287	Hydraulic tube - JD/MF		-	-	-	-	-	1	1	1	1	1	1	1	1	1	1	1	1	1	1	1	1
31	1.373.289	Hydraulic tube - CNH		-	-	-	-	-	1	1	1	1	1	1	1	1	1	1	1	1	1	1	1	1
32	1.379.680	Hydraulic tube - LEXION		1	1	1	1	1	1	1	1	1	1	1	1	1	1	1	1	1	1	1	1	1
32	1.373.288	Hydraulic tube - JD/MF		1	1	1	1	1	1	1	1	1	1	1	1	1	1	1	1	1	1	1	1	1
32	1.373.290	Hydraulic tube - CNH		1	1	1	1	1	1	1	1	1	1	1	1	1	1	1	1	1	1	1	1	1
34	1.379.524	Fitting-90deg W 15LCF - LEXION/JD/MF/CNH/CASE IH		1	1	1	1	1	2	2	2	2	2	2	2	2	2	2	2	2	2	2	2	2
35	1.378.860	Fitting - 90 deg EVW 15 LOMD - LEXION/JD/MF		2	2	2	2	2	2	2	2	2	2	2	2	2	2	2	2	2	2	2	2	2
36	1.379.292	Fitting 7/8-14UNF-M22X1.5 - LEXION/JD/MF/CASE IH		2	2	2	2	2	2	2	2	2	2	2	2	2	2	2	2	2	2	2	2	2
37	1.329.890	Hydraulic quick- coupler - JD/MF		2	2	2	2	2	2	2	2	2	2	2	2	2	2	2	2	2	2	2	2	2
38	91668372320	Hydraulic quick- coupler - LEXION		2	2	2	2	2	2	2	2	2	2	2	2	2	2	2	2	2	2	2	2	2
39	1.327.052	Retaining ring - externaz - JD/MF		2	2	2	2	2	2	2	2	2	2	2	2	2	2	2	2	2	2	2	2	2
40	1.379.525	Fitting bulg head SV 15-PL - JD/MF		2	2	2	2	2	2	2	2	2	2	2	2	2	2	2	2	2	2	2	2	2
41	1.378.860	Fitting - 90 deg EVW 15 LOMD - CNH		3	3	3	3	3	3	3	3	3	3	3	3	3	3	3	3	3	3	3	3	3
42	1.332.515	Hydraulic quick- coupler 3/4-16UNF - CNH		2	2	2	2	2	2	2	2	2	2	2	2	2	2	2	2	2	2	2	2	2
43	1.379.537	Fitting 3/4-16 UNF-M22X1.5A4 - CNH		2	2	2	2	2	2	2	2	2	2	2	2	2	2	2	2	2	2	2	2	2
44	1.379.531	Hydraulic hose - JD/MF		2	2	2	2	2	2	2	2	2	2	2	2	2	2	2	2	2	2	2	2	2
44	1.379.531	Hydraulic hose - CASE IH		1	1	1	1	1	1	1	1	1	1	1	1	1	1	1	1	1	1	1	1	1
45	1.379.630	Short circuit (LEXION, AGCO)		1	1	1	1	1	1	1	1	1	1	1	1	1	1	1	1	1	1	1	1	1
46	1.314.987	Hydraulic quick-coupler CASE IH 1282 338 C91		1	1	1	1	1	1	1	1	1	1	1	1	1	1	1	1	1	1	1	1	1
47	1.315.905	Hydraulic quick-coupler CASE IH 1272 399 C2		1	1	1	1	1	1	1	1	1	1	1	1	1	1	1	1	1	1	1	1	1
48	1.372.678	Hydraulic hose -CASE IH		-	-	-	-	-	1	1	1	1	1	1	1	1	1	1	1	1	1	1	1	1
49	70800942558	Rivet nut M8		8	8	8	8	12	10	10	8	8	8	8	8	8	8	8	8	8	12	12	12	
	1.372.685	JD, MF Bulkhead fittings (items 31, 32, 35,36,37,39,40,44)																						
	1.372.686	LEXION Bulkhead fittings (items 31,32,35,36,38)																						
	1.372.687	CNH Bulkhead fittings (items 31,32,41,42,43)																						
	1.372.688	CASE IH Bulkhead fittings (items 36,44,46,47,48)																						
	1.372.803	RED hose kit 4+2x2R/76,2 - 80 cm (items 26 - 30, 34, 49)		-	-	-	1	-	-	-	-	-	-	-	-	-	-	-	-	-	-	-	-	-
	1.372.804	RED hose kit 6+2x3R/76,2 cm (items 26 - 30, 34, 49)		-	-	-	-	-	-	1			-	-	-	-	-	-	-	-	-	-	-	-
	1.372.805	RED hose kit 6R/76,2 cm (items 26 - 30, 34, 49)		-	-	-	-	-	-	-	-	1	-	-	-	-	-	-	-	-	-	-	-	-
	1.372.806	RED hose kit 8R/55,6 cm (items 26 - 30, 34, 49)		-	-	-	-	-	-	-	-	-	-	1	-	-	-	-	-	-	-	-	-	-
	1.372.807	RED hose kit 8R/76,2 cm (items 26 - 30, 34, 49)		-	-	-	-	-	-	-	-	-	-	-	-	1	-	-	-	-	-	-	-	-
	1.372.808	RED hose kit 12R/50,8 cm (items 26 - 30, 34, 49)		-	-	-	-	-	-	-	-	-	-	-	-	-	-	1	-	-	-	-	-	-
	1.372.809	RED hose kit 12R/55,6 cm (items 26 - 30, 34, 49)		-	-	-	-	-	-	-	-	-	-	-	-	-	-	-	1	-	-	-	-	-
	1.372.810	RED hose kit 12R/76,2 cm (items 26 - 30, 34, 49)		-	-	-	-	-	-	-	-	-	-	-	-	-	-	-	-	-	1	-	-	-
	1.372.821	RED hose kit 8R/96,5 cm (items 26 - 30, 34, 49)		-	-	-	-	-	-	-	-	-	-	-	-	-	1	-	-	-	-	-	-	-

Note: In case of 4+2R, 4+2x2R and 5x2x2R Headers item 28 joins directly to item 41 (CNH) or to item 40 (JD,MF) or to item 35 (CLAAS) or to item 36 (CASE IH) so item 31 and one pc. of item 34 are not used for these models.
To install the RED's from factory, order the following Items:
1. The correct "Bulkhead fittings"
2. The correct "RED hose kit"
3. "Rotary divider assy" in the correct color, page 55 (2 items LH and RH)

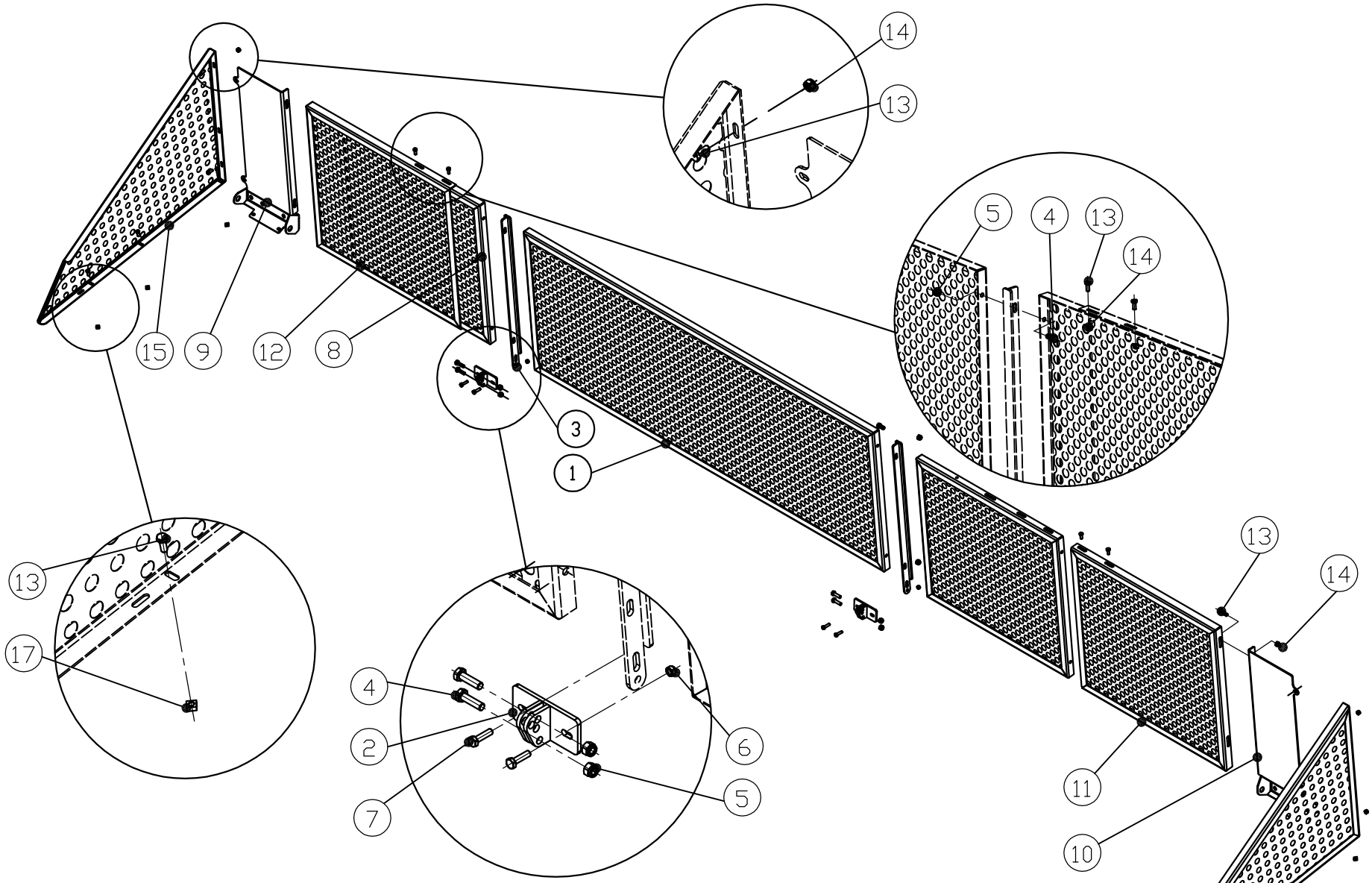

1.379.790 - CORNADO 6R->2015 1.372.593 - CORNADO 6R 2016->
1.379.791 - CORNADO 8R->2015 1.372.594 - CORNADO 8R 2016->
1.379.792 - CORNADO 12R->2015 1.372.595 - CORNADO 12R 2016->

57.

SAVER NET

Ref.	Part Number	Description		6 row	8 row	12 row
1	1.331.635	Welded net		1	-	-
1	1.331.640	Welded net		-	1	3
2	1.379.824	Welded shoe		2	2	4
3	1.379.829	Welded holder		2	2	4
4	79410002566	Hex bolt M10x25 - DIN933/8.8		8	8	16
5	74910000066	Hex nut - plastic insert M10 - DIN985		8	8	16
6	70808000026	Rivet nut M8		5	5	10
7	79408003066	Hex bolt M8x30 - DIN933/8.8		4	4	8
8	1.379.805	Welded fix net		2	-	2
8	1.379.809	Welded fix net		-	2	-
9	1.379.795	Right holder	→2015	1	1	1
9	1.372.592	Right holder	2016→	1	1	1
10	1.379.796	Left holder	→2015	1	1	1
10	1.372.591	Left holder	2016→	1	1	1
11	1.379.830	Welded adjustable left net		1	1	1
12	1.379.799	Welded adjustable right net		1	1	1
13	79408002066	Hex bolt M8x20 - DIN933/8.8		22	22	22
14	74908000066	Hex nut - plastic insert M8 - DIN985		16	16	16
15	1.379.813	Welded net right		1	1	1
16	1.379.814	Welded net left		1	1	1
17	96714446000	Insert nut M8x13		8	8	8
	1.379.790	Saver net assy (items 1-17)	→2015	1	-	-
	1.379.791	Saver net assy (items 1-17)	→2015	-	1	-
	1.379.792	Saver net assy (items 1-17)	→2015	-	-	1
	1.372.593	Saver net assy (items 1-17)	2016→	1	-	-
	1.372.594	Saver net assy (items 1-17)	2016→	-	1	-
	1.372.595	Saver net assy (items 1-17)	2016→	-	-	1

Fix vázú csötörő
hidraulikus törölécállítással
Rigid-framed corn heads
with hydr. SPA

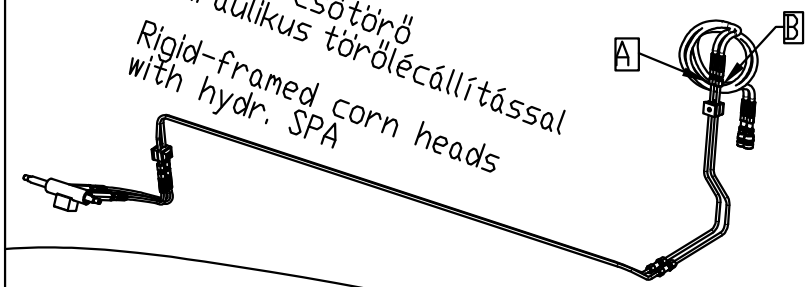

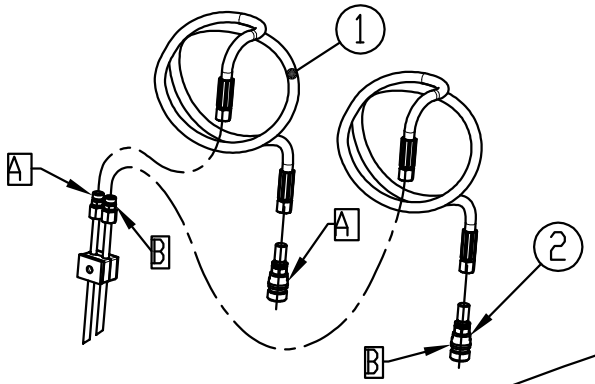

Csukható csötörő hidraulikus törölécállítással
Foldable corn heads with hydr. SPA

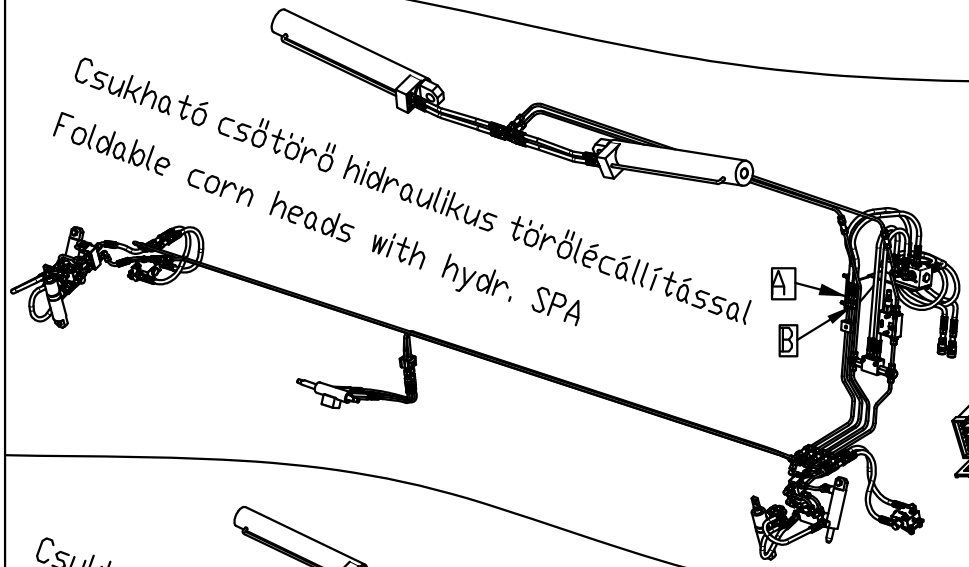

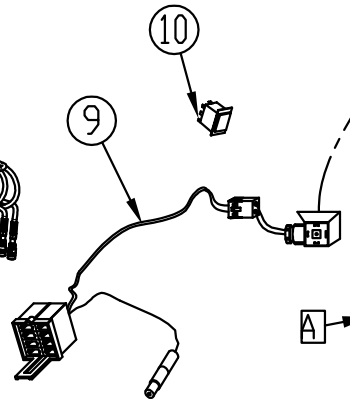

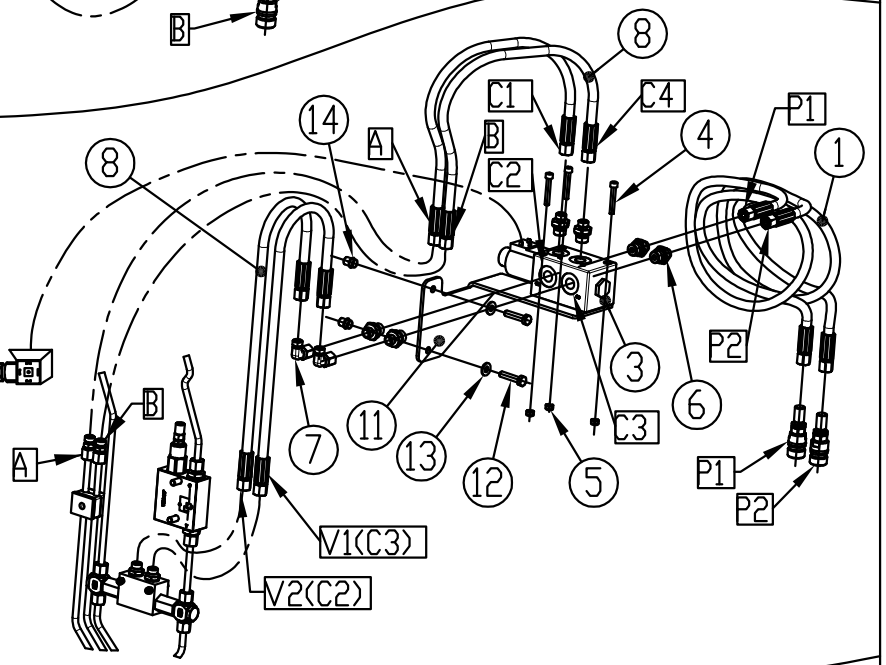

Csukható csötörő elektromos törölécállítással
Foldable corn heads with electric SPA

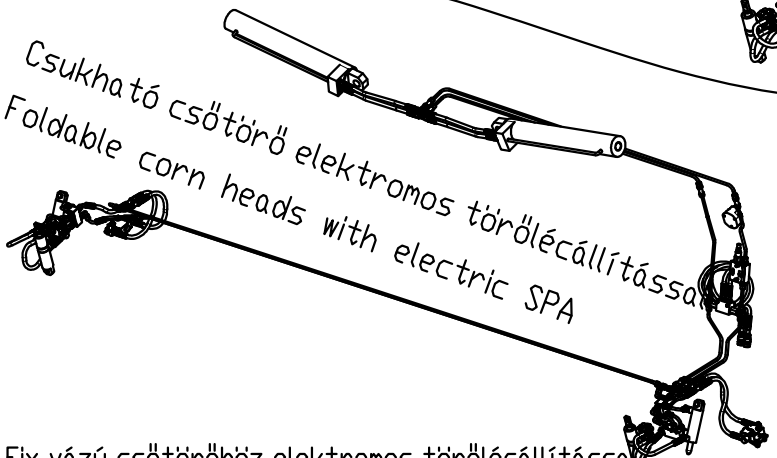

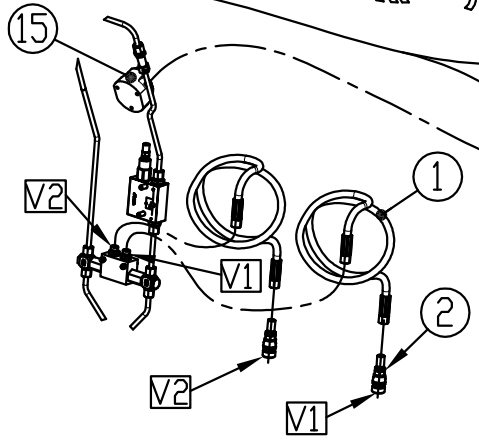

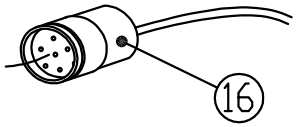

Kábeleket és kábelkötegeket lásd
a felszerelő klt. lapokon!

For wires and harnesses see
mounting kit pages!

Fix vázú csötöröhöz elektromos törölécállítással:
For rigid-framed corn heads with electr. SPA:
lásd a felszerelő klt. lapot /
see the sheet of mounting kit

HYDRAULIC MULTI-COUPLER KIT: CNH 2002→

Ref.	Part Number	Description		RIGID with hydr. SPA	FOLDING with hydr. SPA	FOLDING with electr. SPA
1.	See mounting kit pages	Harness				
2.	1.355.489	Support plate		1	1	1
3.	79408002566	Hex bolt M8x25 - DIN933/8.8		3	3	3
4.	91623938761	Spring washer		11	11	11
5.	73508000066	Hex nut M8 - DIN934		7	7	7
6.	70808000026	Rivet nut M8	→2019	2	2	2
6.	70708000066	Lock nut M8 - DIN 980/8.8	2020→	2	2	2
7.	1.379.443	Bracket		1	1	1
8.	1.327.148	Plate		1	1	1
9.	79405001660	Hex bolt M5x16 - DIN933/8.8		3	3	3
10.	73505000066	Hex nut M5 - DIN934		3	3	3
11.	1.327.510	Multiclutch		1	1	1
12.	80208002066	Hex socket head cap bolt M8x20 DIN912/8.8		4	4	4
13.	96789617873	O-ring		3	3	3
14.	1.327.509	Fitting M14x1.5 / 9/16-18 UNF		3	3	3
15.	1.327.508	Cup		1	1	1
16.	1.351.403	Hydraulic hose 1SNDN6-585		2	2	2
17.	1.379.394	Directional valve LC 6/2		-	1	-
18.	80206004066	Hex socket head cap bolt M6x40 DIN912/8.8		-	3	-
19.	74906000066	Hex nut - plastic insert M6 - DIN985		-	3	-
20.	1.353.318	Fitting - M14X1.5 / G3/8		-	6	-
21.	1.314.510	Fitting - 90deg. EVW 8 PL		-	2	-
22.	1.331.795	Hydraulic hose 1SNDN6-630		-	4	-
23.	1.353.204	Harness		-	1	-
24.	1.353.213	Switch 6FH 007 832-121 HELLA		-	1	-
25.	79308012066	Hex bolt M8x120 - DIN931/10.9	2020→	2	2	2
-	1.379.472	Directional valve assy (17-24)		-	1	-
-	1.379.475	Hydraulic multipoint kit. (2-16)		1	1	1
-	1.372.705	Multicoupler: CNH rigid hydraulic - B6760 (items 2-16 and items 22,23 on page 25/B)		1	-	-
-	1.372.706	Multicoupler: CNH folding hydraulic- B6761 (items 2-24 and items 22,23 on page 25/B)		-	1	-

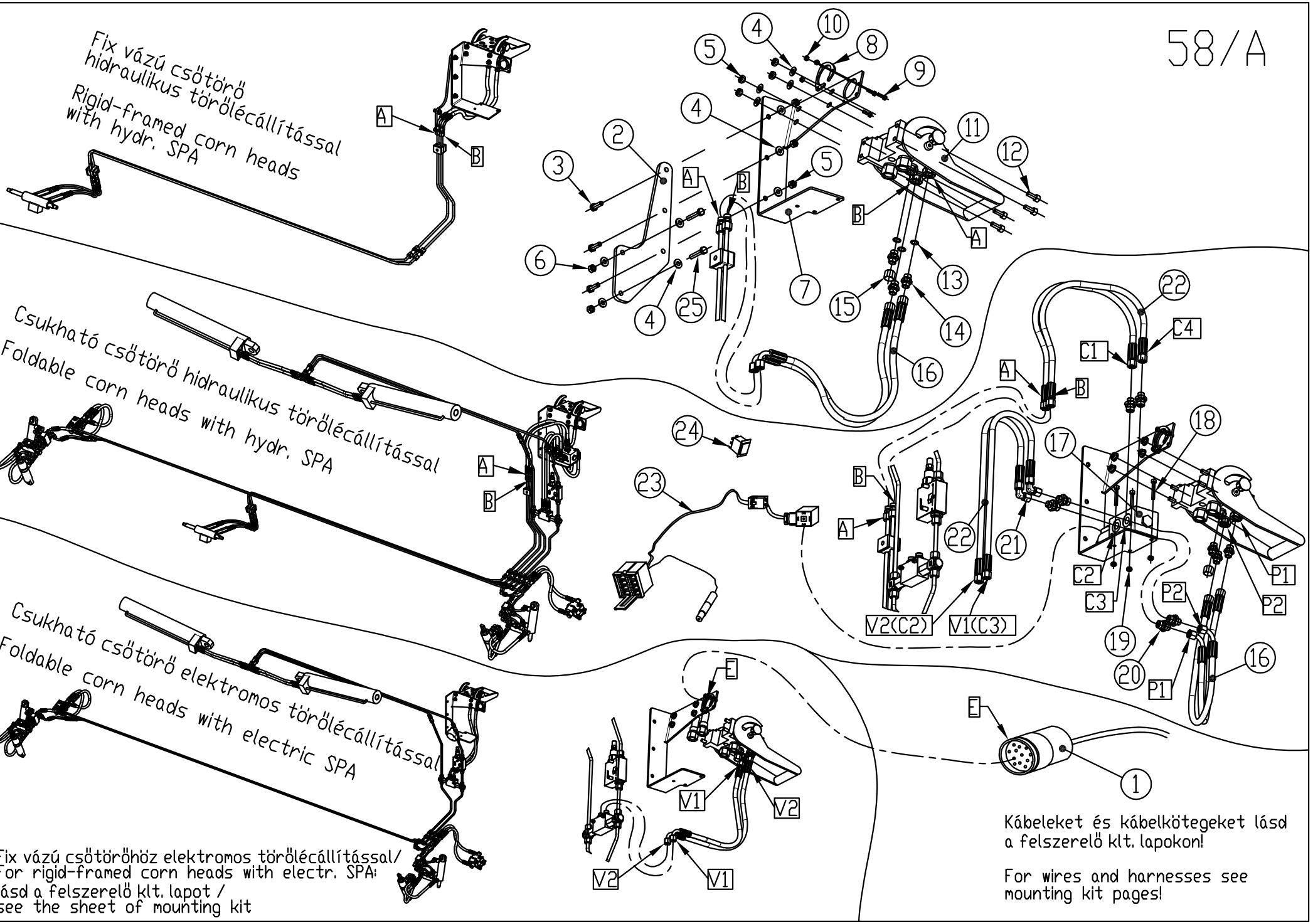

Fix vázú csötöröhöz elektromos törölécállítással/
For rigid-framed corn heads with electr. SPA:
lásd a felszerelő klt. lapot /
see the sheet of mounting kit

HYDRAULIC KIT: NH → 2001
(TORUM, ACROS, VECTOR, DON, MF32-40,MF 7274/7278 CEREA)

Ref.	Part Number	Description	RIGID with hydr. SPA	FOLDING with hydr. SPA	FOLDING with electr. SPA
1.	1.353.195	Hydraulic hose 1SNDN6-1200	2	2	2
2.	1.315.035	Hydraulic quick-coupler	2	2	2
2.	1.332.065	Hydraulic quick-coupler **(TORUM, ACROS, VECTOR, DON)**	2	2	2
2.	1.315.037	Hydraulic quick-coupler **(MF 32-40, MF 7274/7278 CEREA)**	2	2	2
3.	1.379.394	Directional valve LC 6/2	-	1	-
4.	80206004066	Hex socket head cap bolt M6x40 DIN912/8.8	-	3	-
5.	74906000066	Hex nut - plastic insert M6 - DIN985	-	3	-
6.	1.353.318	Fitting - M14X1.5 /G3/8	-	6	-
7.	1.314.510	Fitting - 90deg. EVW 8 PL	-	2	-
8.	1.331.795	Hydraulic hose 1SNDN6-630	-	4	-
9.	1.353.204	Harness	-	1	-
10.	1.353.213	Switch 6FH 007 832-121 HELLA	-	1	-
11.	1.379.643	Bracket	-	1	-
12.	79408003566	Hex bolt M8x35 - DIN933/8.8	-	2	-
13.	91623938761	Spring washer	-	2	-
14.	70808000026	Rivet nut M8	-	2	-
15.	See item 22, page 18/A				
16.	See item 37, page 18/A				
-	1.379.472	Directional valve assy (items 3-10)			

Fix vázú csőtörő
hidraulikus törőlécállítással
Rigid-framed corn heads
with hydr. SPA

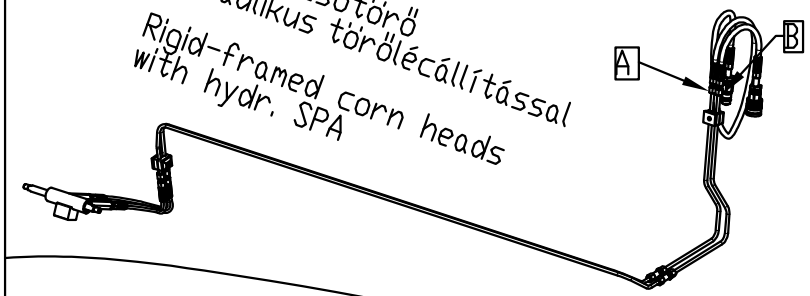

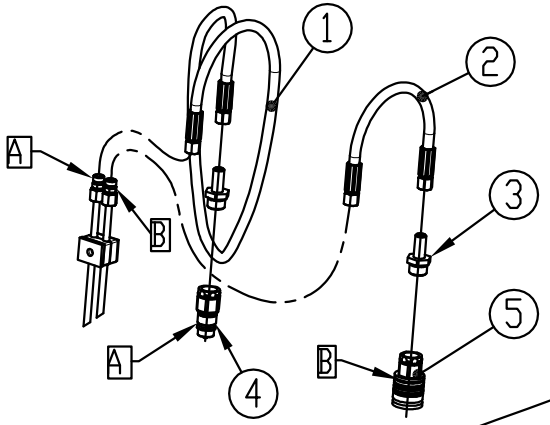

Csukható csőtörő hidraulikus törőlécállítással
Foldable corn heads with hydr. SPA

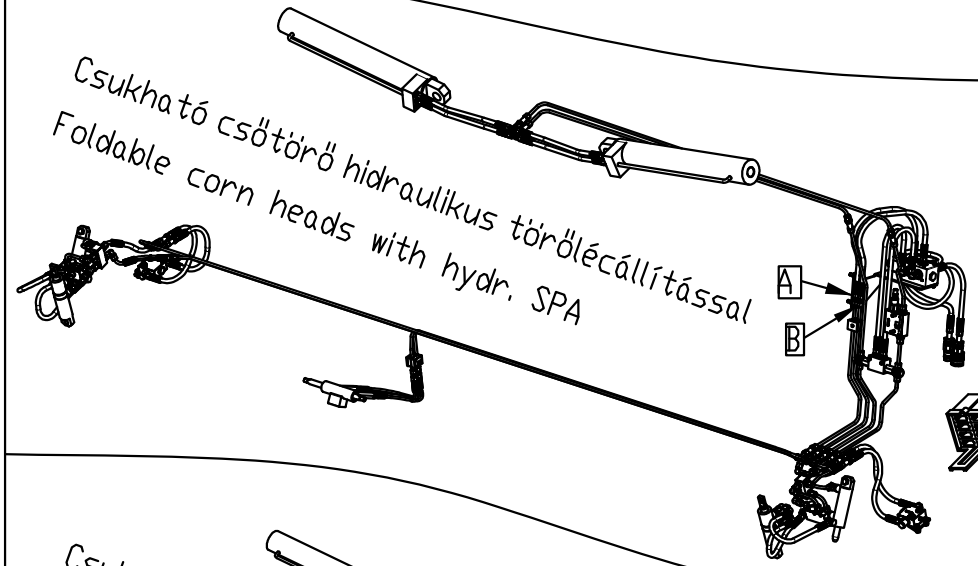

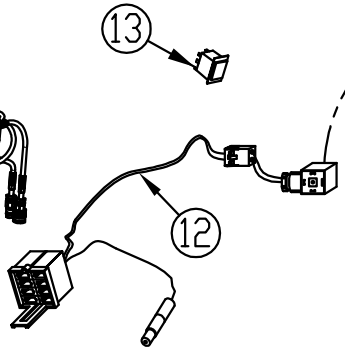

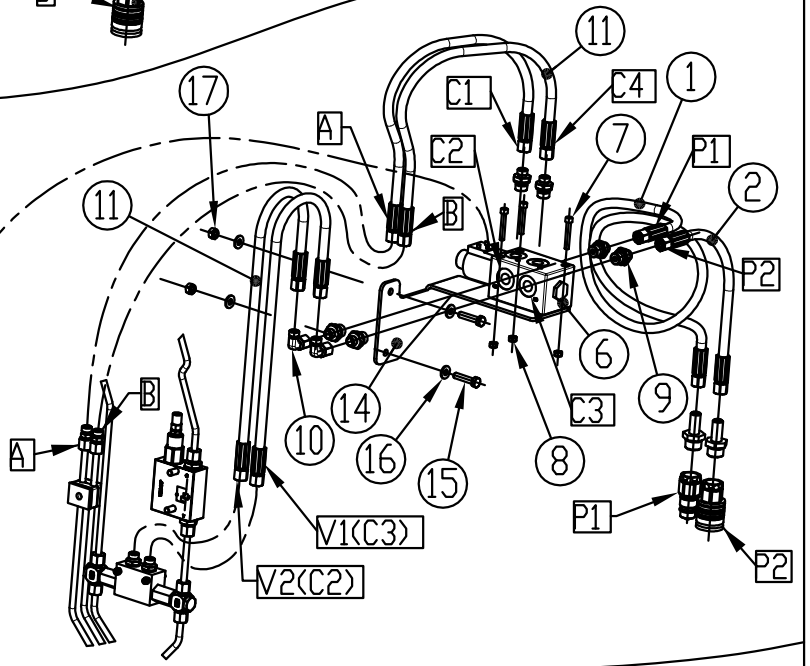

Csukható csőtörő elektromos törőlécállítással
Foldable corn heads with electric SPA

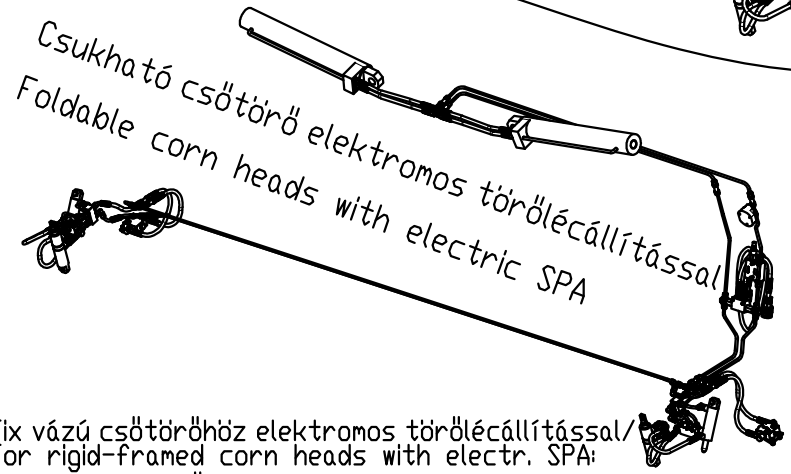

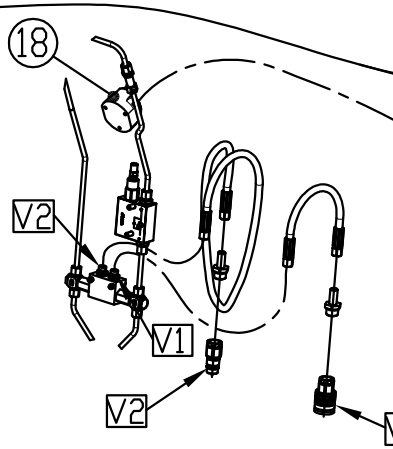

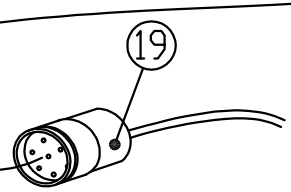

Fix vázú csőtöröhöz elektromos törőlécállítással/
For rigid-framed corn heads with electr. SPA:
lásd a felszerelő klt. lapot /
see the sheet of mounting kit

Kábeleket és kábelkötegeket lásd
a felszerelő klt. lapokon!

For wires and harnesses see
mounting kit pages!

HYDRAULIC CONNECTION: CASE IH 1600-2000 SERIES

Ref.	Part Number	Description		RIGID with hydr. SPA	FOLDING with hydr. SPA	FOLDING with electr. SPA
1.	1.353.195	Hydraulic hose 1SNDN6-1200		1	1	1
2.	1.330.772	Hydraulic hose 1SNDN6-375		1	1	1
3.	1.314.572	Fitting M14x1.5 / 7/8-14 UNF		2	2	2
4.	1.315.905	Hydraulic quick-coupler		1	1	1
5.	1.314.987	Hydraulic quick-coupler		1	1	1
6.	1.379.394	Directional valve LC 6/2		-	1	-
7.	80206004066	Hex socket head cap bolt M6x40 DIN912/8.8		-	3	-
8.	74906000066	Hex nut - plastic insert M6 - DIN985		-	3	-
9.	1.353.318	Fitting - M14X1.5 / G3/8		-	6	-
10.	1.314.510	Fitting - 90deg. EVW 8 PL		-	2	-
11.	1.331.795	Hydraulic hose 1SNDN6-630		-	4	-
12.	1.353.204	Harness		-	1	-
13.	1.353.213	Switch 6FH 007 832-121 HELLA		-	1	-
14.	1.379.643	Bracket		-	1	-
15.	79408003566	Hex bolt M8x35 - DIN933/8.8	→2019	-	2	-
15.	79308012066	Hex bolt M8x120 - DIN931/10.9	2020→	-	2	-
16.	91623938761	Spring washer		-	4	-
17.	70808000026	Rivet nut M8	→2019	-	2	-
17.	70708000066	Lock nut M8 - DIN 980/8.8	2020→	-	2	-
18.	See item 22, page 18/A					
19.	See item 39, page 18/A					
-	1.379.472	Directional valve assy (items 6-13)				
-	1.372.707	Hydraulic connection: CASE IH rigid - B6762 (items 1-5)		1	-	-
-	1.372.708	Hydraulic connection: CASE IH folding - B6763 (items 1-17)		-	1	-

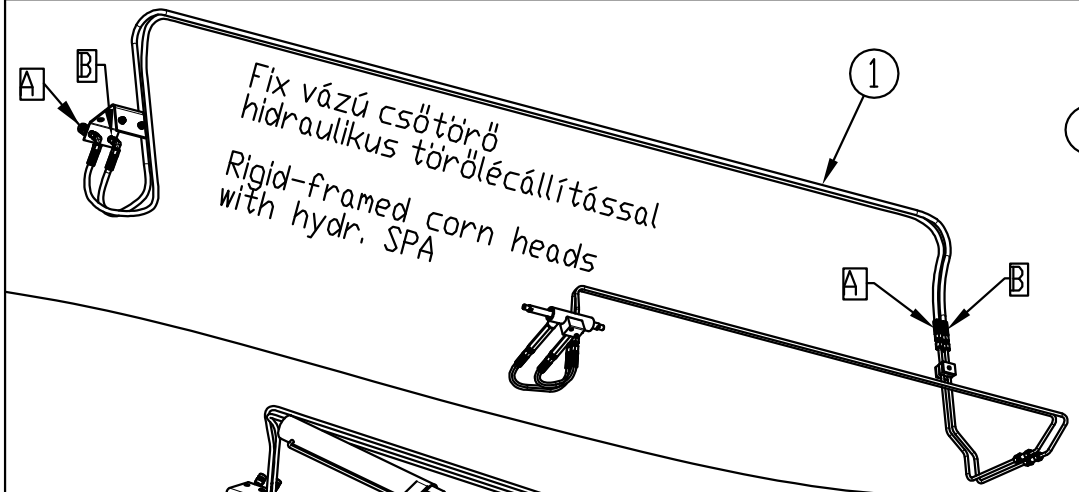

Fix vázú csötörő
hidraulikus törölécállítással

Rigid-framed corn heads
with hydr. SPA

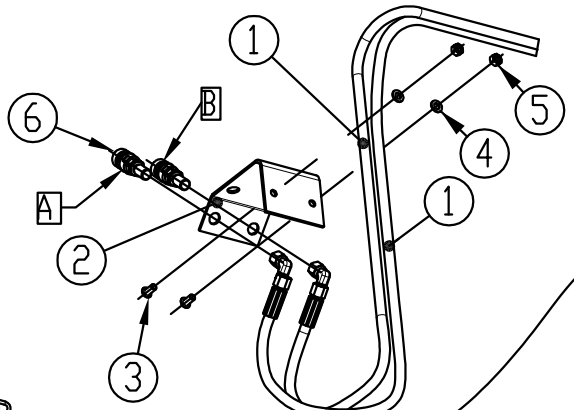

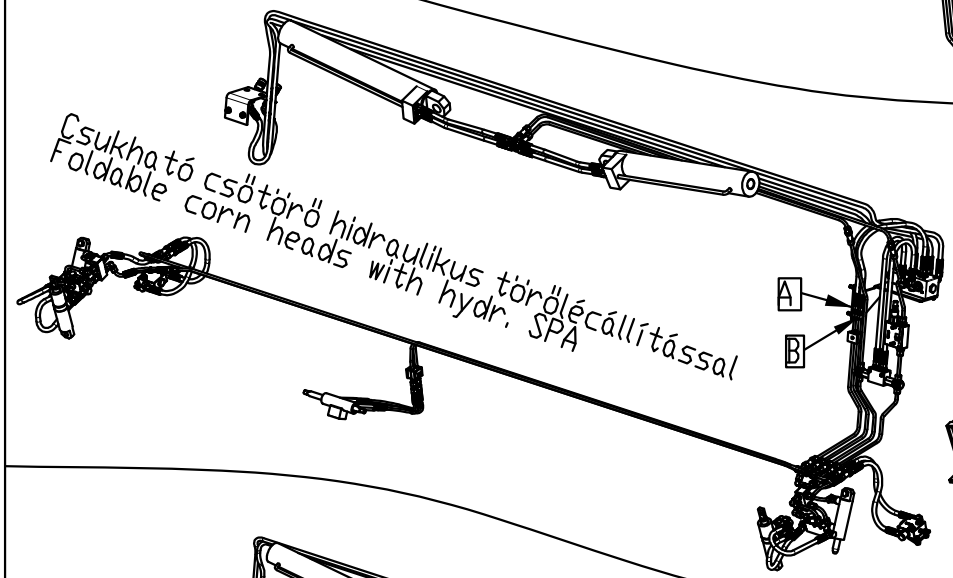

Csukható csötörő hidraulikus törölécállítással
Foldable corn heads with hydr. SPA

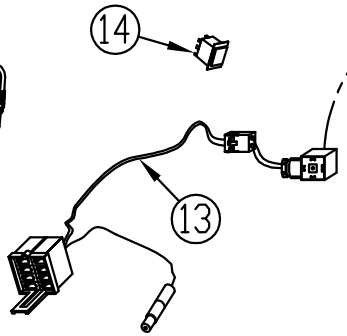

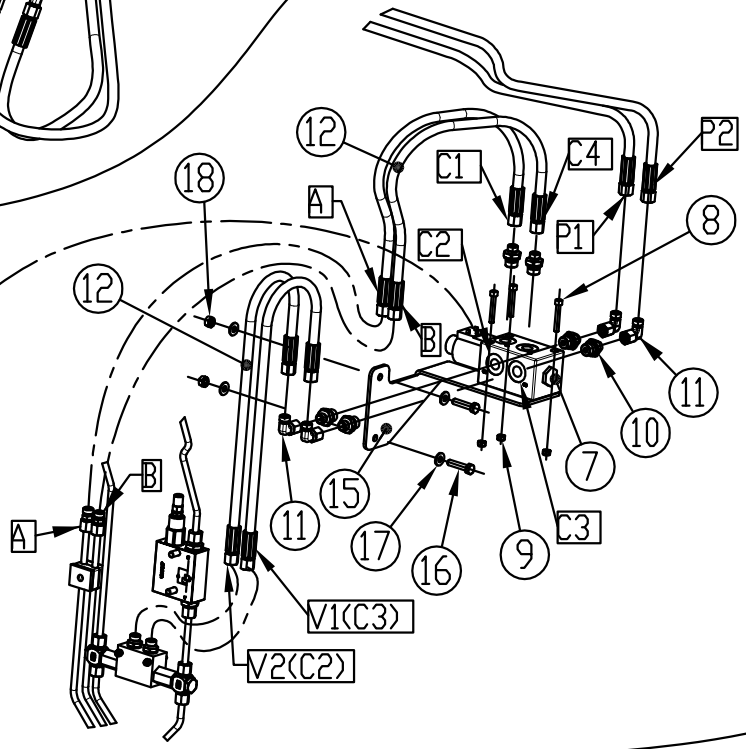

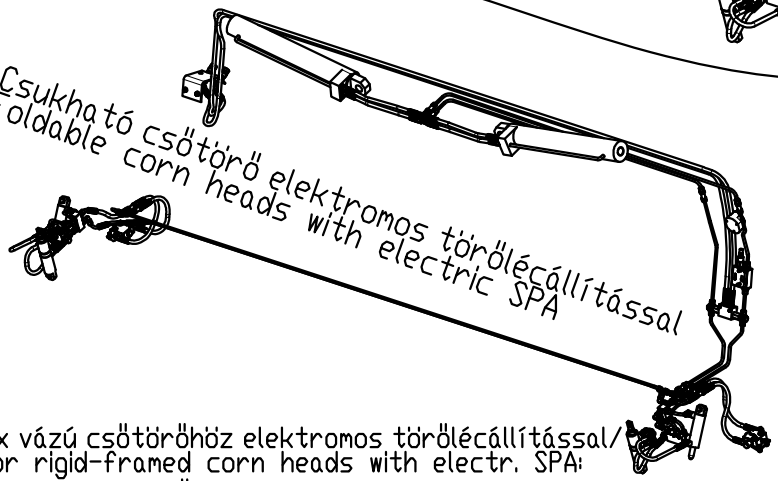

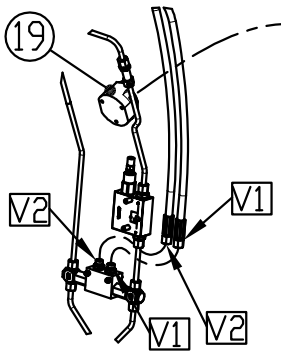

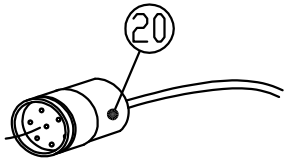

Fix vázú csötöröhöz elektromos törölécállítással/
For rigid-framed corn heads with electr. SPA:
lásd a felszerelő klt. lapot /
see the sheet of mounting kit

Kábeleket és kábelkötegeket lásd
a felszerelő klt. lapokon!

For wires and harnesses see
mounting kit pages!

HYDRAULIC KIT: CD, MEGA, KZSZ-7, KZSZ-10K, KZSZ-1218

Ref.	Part Number	Description		RIGID with hydr. SPA	FOLDING with hydr. SPA	FOLDING with electr. SPA
1.	1.356.208	Hydraulic hose 1SNDN6-3650		2	2	2
2.	1.309.604	Holder		1	1	1
3.	610.097.1	Slotted round head bolt M8x16		2	2	2
4.	71408000060	Washer M8 - DIN125 - 200HV		2	2	2
5.	73508000066	Hex nut M8 - DIN934		2	2	2
6.	1.315.035	Hydraulic quick-coupler		2	2	2
7.	1.379.394	Directional valve LC 6/2		-	1	-
8.	80206004066	Hex socket head cap bolt M6x40 DIN912/8.8		-	3	-
9.	74906000066	Hex nut - plastic insert M6 - DIN985		-	3	-
10.	1.353.318	Fitting - M14X1.5 / G3/8		-	6	-
11.	1.314.510	Fitting - 90deg. EVW 8 PL		-	2	-
12.	1.331.795	Hydraulic hose 1SNDN6-630		-	4	-
13.	1.353.204	Harness		-	1	-
14.	1.353.213	Switch 6FH 007 832-121 HELLA		-	1	-
15.	1.379.643	Bracket		-	1	-
16.	79408003566	Hex bolt M8x35 - DIN933/8.8	→2019	-	2	-
16.	79308012066	Hex bolt M8x120 - DIN931/10.9	2020→	-	2	-
17.	91623938761	Spring washer		-	4	-
18.	70808000026	Rivet nut M8	→2019	-	2	-
18.	70708000066	Lock nut M8 - DIN 980/8.8	2020→	-	2	-
19.	See item 22, page 18/A					
20.	See item 39, page 18/A					
-	1.379.472	Directional valve assy (items 7-14)				

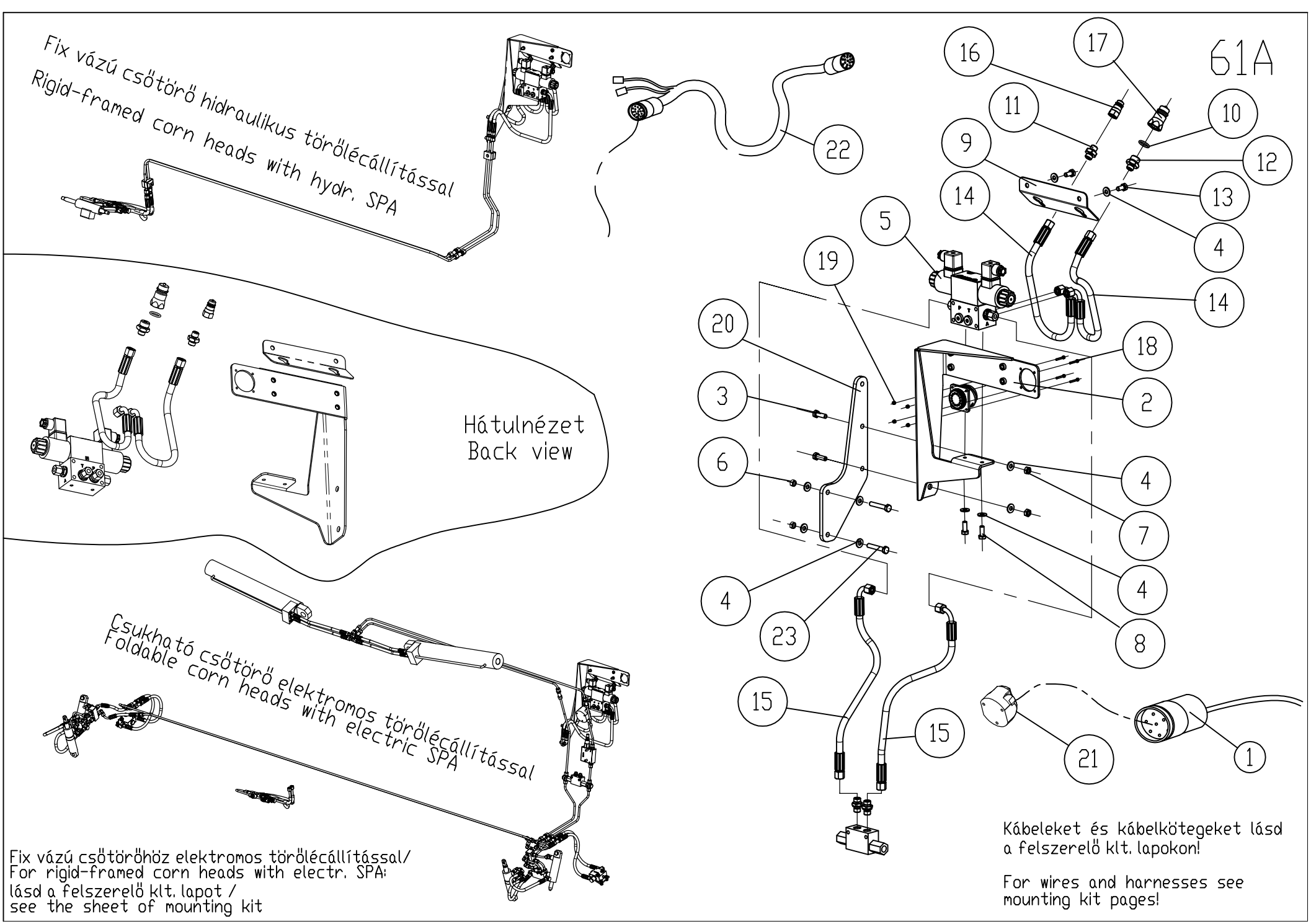
Fix vázú csötörő hidraulikus törölécállítással
Rigid-framed corn heads with hydr. SPA
Hátulnézet
Back view
Csukható csötörő elektromos törölécállítással
Foldable corn heads with electric SPA
Fix vázú csötöröhöz elektromos törölécállítással/
For rigid-framed corn heads with electr. SPA:
lásd a felszerelő klt. lapot /
see the sheet of mounting kit
61A
Kábeleket és kábelkötegeket lásd
a felszerelő klt. lapokon!
For wires and harnesses see
mounting kit pages!

HYDRAULIC KIT: JD 2000

Ref.	Part Number	Description		RIGID with hydr. SPA	FOLDING with electr. SPA
1.	See mounting kit pages	Harness			
2.	1.332.947	Holder		1	1
3.	79408002566	Hex bolt M8x25 - DIN933/8.8		2	2
4.	91623938761	Spring washer		10	10
5.	1.372.373	Hydraulic valve		1	1
6.	70808000026	Rivet nut M8	→2019	2	2
6.	70708000066	Lock nut M8 - DIN 980/8.8	2020→	2	2
7.	73508000066	Hex nut M8 - DIN934		2	2
8.	79408002066	Hex bolt M8x20 - DIN933/8.8		2	2
9.	1.332.956	Holder		1	1
10.	63001803000	O-ring 18x3		1	1
11.	1.323.321	Fitting - M14x1,5 / NPTF 1/4-18		1	1
12.	1.323.320	Fitting - M14x1,5 / UNF 3/4-16		1	1
13.	79408001666	Hex bolt M8x16 - DIN933/8.8		2	2
14.	1.379.477	Hydraulic hose 1SNDN6-410		2	2
15.	1.376.497	Hydraulic hose 1SNDN6-450		2	2
16.	1.323.324	Quick coupler		1	1
17.	1.323.323	Quick coupler		1	1
18.	80203002062	Hex socket head cap bolt M3x20 DIN912/12.9		4	4
19.	74903000066	Hex nut - plastic insert M3 - DIN985		4	4
20.	1.355.489	Holder		1	1
21.	See item 22, page 18/A				
22.	1.372.353	Harness		1	1
23.	79308012066	Hex bolt M8x120 - DIN931/10.9	2020→	2	2

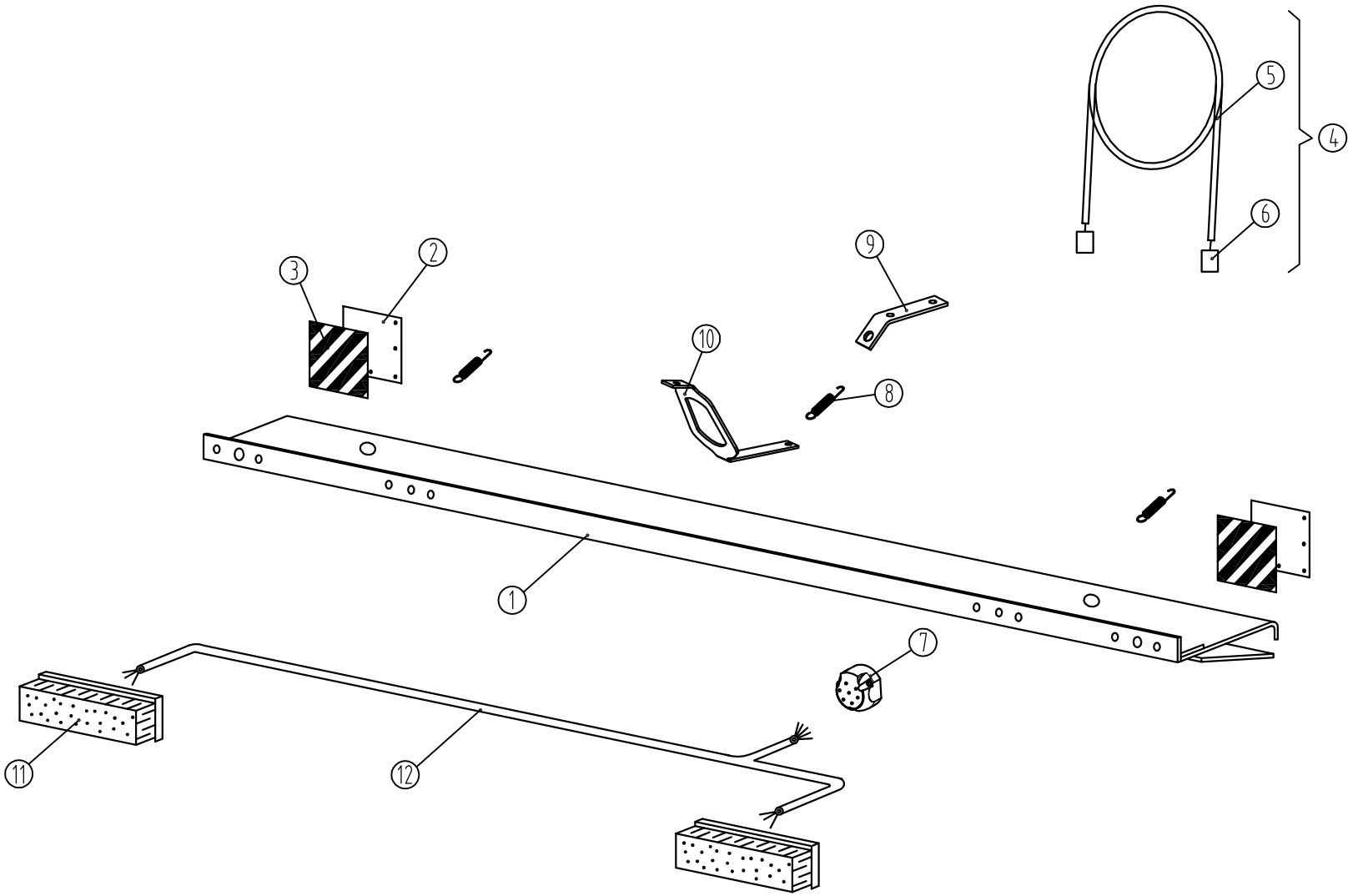

1.329.672

2020

TRAFFIC ACCESSORIES

Ref.	Part Number	Description		4+2, 4+2X2R 70-80 CM	5+2X2R 60; 76,2 CM
1.	1.323.675	Bracket		1	1
2.	1.321.463	Plate		2	2
3.	1.321.464	Reflective foil		2	2
4.	1.315.692	Wire assy		1	1
5.	1.315.693	Wire		1	1
6.	1.310.552	Plug		2	2
7.	1.310.551	Connector (12V, 25A)		1	1
8.	1.315.006	Spring		3	3
9.	1.329.538	Bracket		3	3
10.	1.329.537	Bracket		3	3
11.	1.315.891	Lamp		2	2
12.	1.372.132	Cable		1	1
	1.329.672	Road traffic accessorys (items 1-12)		1	1

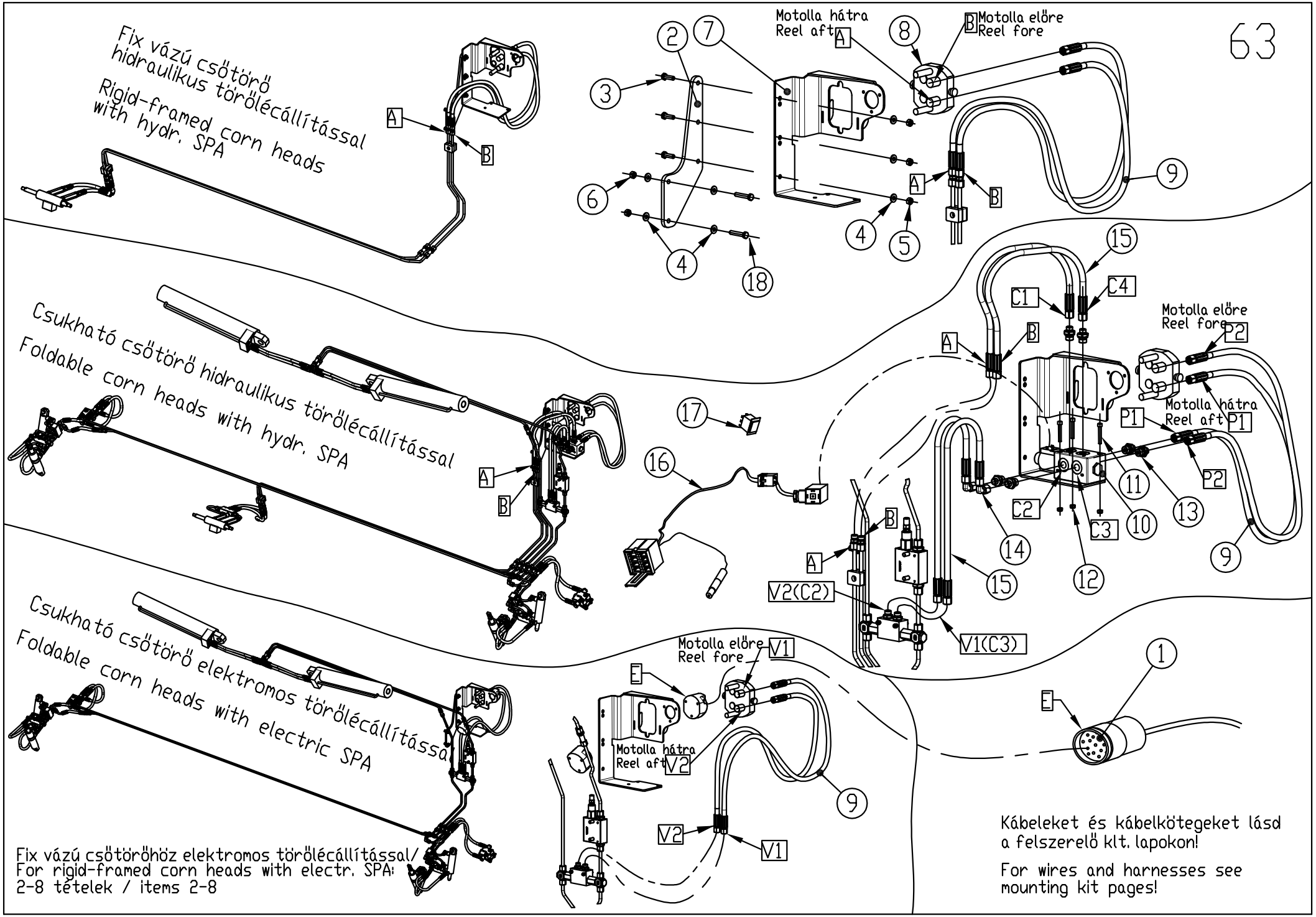

Fix vázú csötörőhöz elektromos törölécállítással/
For rigid-framed corn heads with electr. SPA:
2-8 tételek / items 2-8

Kábeleket és kábelkötegeket lásd
a felszerelő klt. lapokon!

For wires and harnesses see
mounting kit pages!

HYDRAULIC MULTI-COUPLER KIT: DEUTZ FAHR

Ref.	Part Number	Description		RIGID with hydr. SPA	RIGID with electr. SPA	FOLDING with hydr. SPA	FOLDING with electr. SPA
1.	See mounting kit pages	Harness					
2.	1.355.489	Support plate		1	1	1	1
3.	79408002566	Hex bolt M8x25 - DIN933/8.8		5	5	5	5
4.	91623938761	Spring washer		7	7	7	7
5.	73508000066	Hex nut M8 - DIN934		3	3	3	3
6.	70808000026	Rivet nut M8	→2019	2	2	2	2
6.	70708000066	Lock nut M8 - DIN 980/8.8	2020→	2	2	2	2
7.	1.372.100	Bracket		1	1	1	1
8.	1.372.104	Multiclutch		1	1	1	1
9.	1.375.667	Hydraulic hose 1SNDN6-1600		2	-	2	2
10.	1.379.394	Directional valve LC 6/2		-	-	1	-
11.	80206004066	Hex socket head cap bolt M6x40 DIN912/8.8		-	-	3	-
12.	74906000066	Hex nut - plastic insert M6 - DIN985		-	-	3	-
13.	1.353.318	Fitting - M14X1.5 /G3/8		-	-	6	-
14.	1.314.510	Fitting - 90deg. EVW 8 PL		-	-	2	-
15.	1.331.795	Hydraulic hose 1SNDN6-630		-	-	4	-
16.	1.353.204	Harness		-	-	1	-
17.	1.353.213	Switch 6FH 007 832-121 HELLA		-	-	1	-
18.	79308012066	Hex bolt M8x120 - DIN931/10.9	2020→	2	2	2	2
-	1.379.472	Directional valve assy (items10-17)					
-	1.372.105	Hydraulic multipoint kit. (items 2-8)					

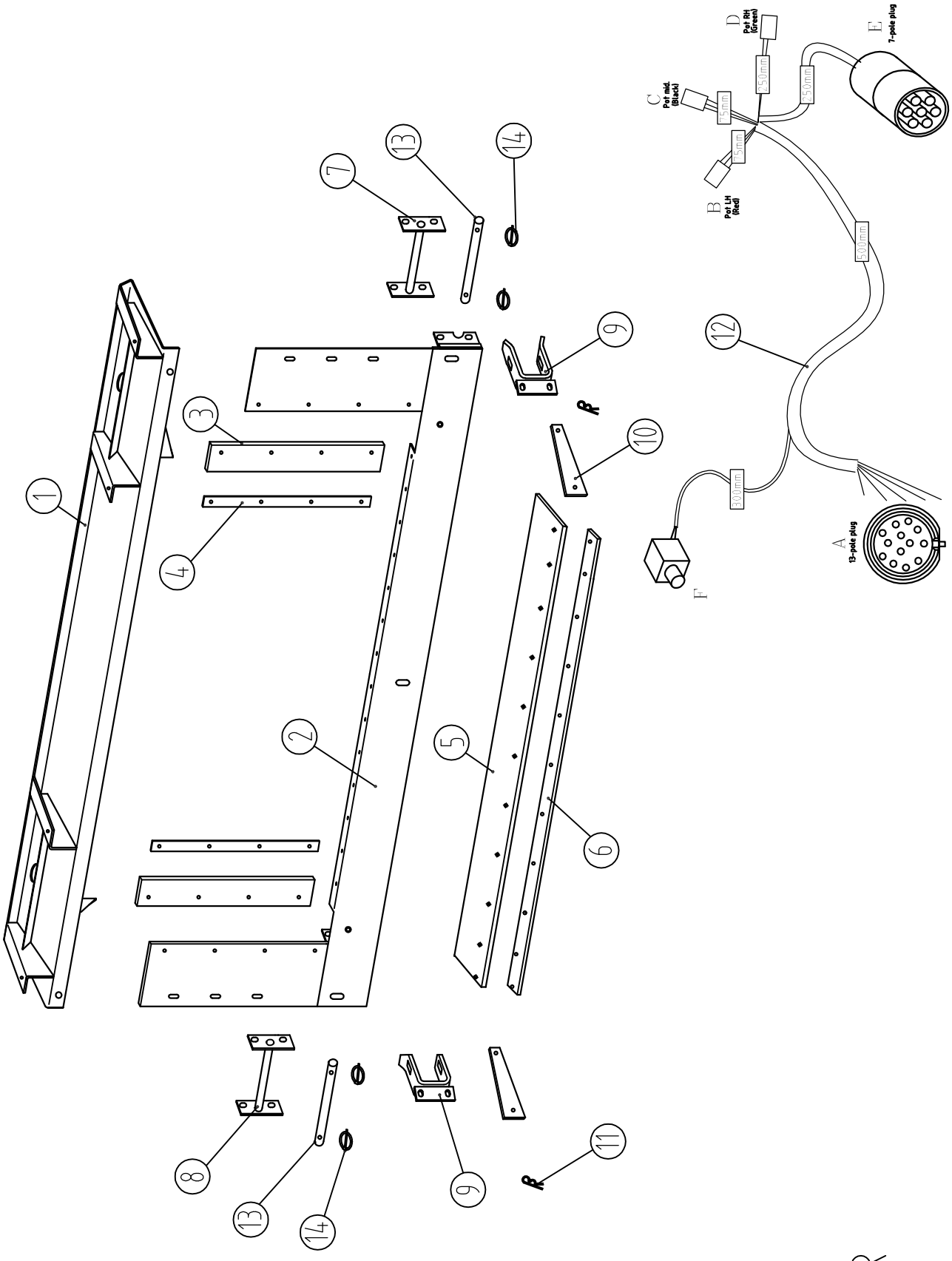
D
Pot RH (Green)
E
7-pole plug
C
Pot mid (Black)
B
Pot LH (Red)
250mm
75mm
500mm
A
13-pole plug
F
1
2
3
4
5
6
7
8
9
10
11
12
13
14

FAHR

2017

MOUNTING KIT: DEUTZ FAHR -> 2017

Ref.	Part Number	Description		All models
1	1.320.988	Upper filler welded		1
2	1.322.445	Lower filler welded		1
3	1.322.008	Rubber plate	→2019	2
3	1.372.963	Rubber plate	2020→	2
4	1.322.009	Flat Iron		2
5	1.322.010	Rubber plate	→2019	1
5	1.372.964	Rubber plate	2020→	1
6	1.322.011	Retainer		1
7	1.322.001	Lower retainer welded - LH	→2016	1
8	1.322.004	Lower retainer welded - RH	→2016	1
9	1.322.005	Lower retainer welded		2
10	1.300.278	Key-wedge		2
11	673.749.0	Hairpin D=4.5		4
12	1.372.086	HARNESS		1
13	1.332.954	Shaft	2017→	2
14	967PSF30526	Lynch pin PSF 30526 d=4,5	2017→	4

65

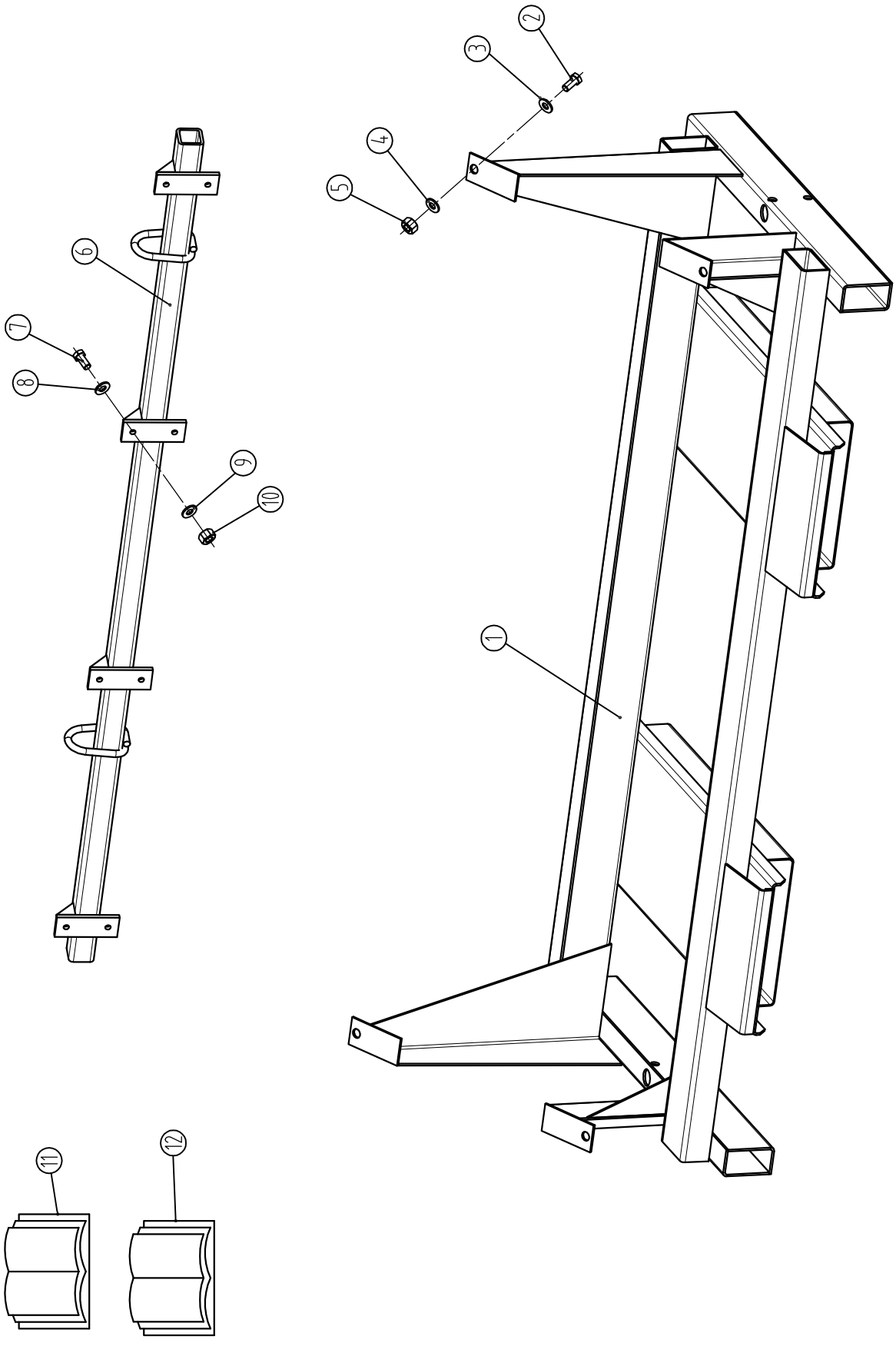

2018

SHIPPING ACCESSORIES

T.sz.	Rajzszám	Megnevezés	6 R 70cm	6 R 76.2cm	8 R 50cm	8 R 56cm	8 R 70cm	8 R 76.2cm	8 R 80cm	9 R 76.2cm	12 R 50cm	12 R 56cm	12 R 70cm	12 R 76.2cm	16 R 76.2cm
1	1.320.609	Shipping stand weld.	1	1	1	1	1	1	1	1	1	1	1	1	1
2	79416003066	Hex bolt M16x30 - DIN933/8.8	4	4	4	4	4	4	4	4	4	4	4	4	4
3	71416000060	Washer M16 - DIN125 - 200HV	4	4	4	4	4	4	4	4	4	4	4	4	4
4	72216000060	Spring washer M16 - DIN128/A	2	2	2	2	2	2	2	2	2	2	2	2	2
5	73516000066	Hex nut M16 - DIN934	2	2	2	2	2	2	2	2	2	2	2	2	2
6	1.354.583	Lifting bar weld.	1	-	-	-	1	-	-	-	-	-	2	-	-
6	1.353.054	Lifting bar weld.	-	1	-	-	-	1	-	-	-	-	-	2	2
6	1.353.732	Lifting bar weld.	-	-	1	-	-	-	-	-	2	-	-	-	-
6	1.353.345	Lifting bar weld.	-	-	-	1	-	-	-	-	-	2	-	-	-
6	1.354.244	Lifting bar weld.	-	-	-	-	-	-	1	-	-	-	-	-	-
6	1.377.530	Lifting bar weld.	-	-	-	-	-	-	-	1	-	-	-	-	-
7	79412003566	Hex bolt M12x35 - DIN933/8.8	8	8	8	8	8	8	8	10	16	16	16	16	16
8	71412000060	Washer M12 - DIN125 - 200HV	8	8	8	8	8	8	8	10	16	16	16	16	16
9	91623938961	Spring washer - A12	8	8	8	8	8	8	8	10	16	16	16	16	16
10	70712000066	Lock nut - DIN980 - M12	8	8	8	8	8	8	8	10	16	16	16	16	16
11	1.372.509	Operators manual	1	1	1	1	1	1	1	1	1	1	1	1	1
12	1.376.499	Spare part list	1	1	1	1	1	1	1	1	1	1	1	1	1
12	1.377.563	Spare part list	1	1	1	1	1	1	1	1	1	1	1	1	1

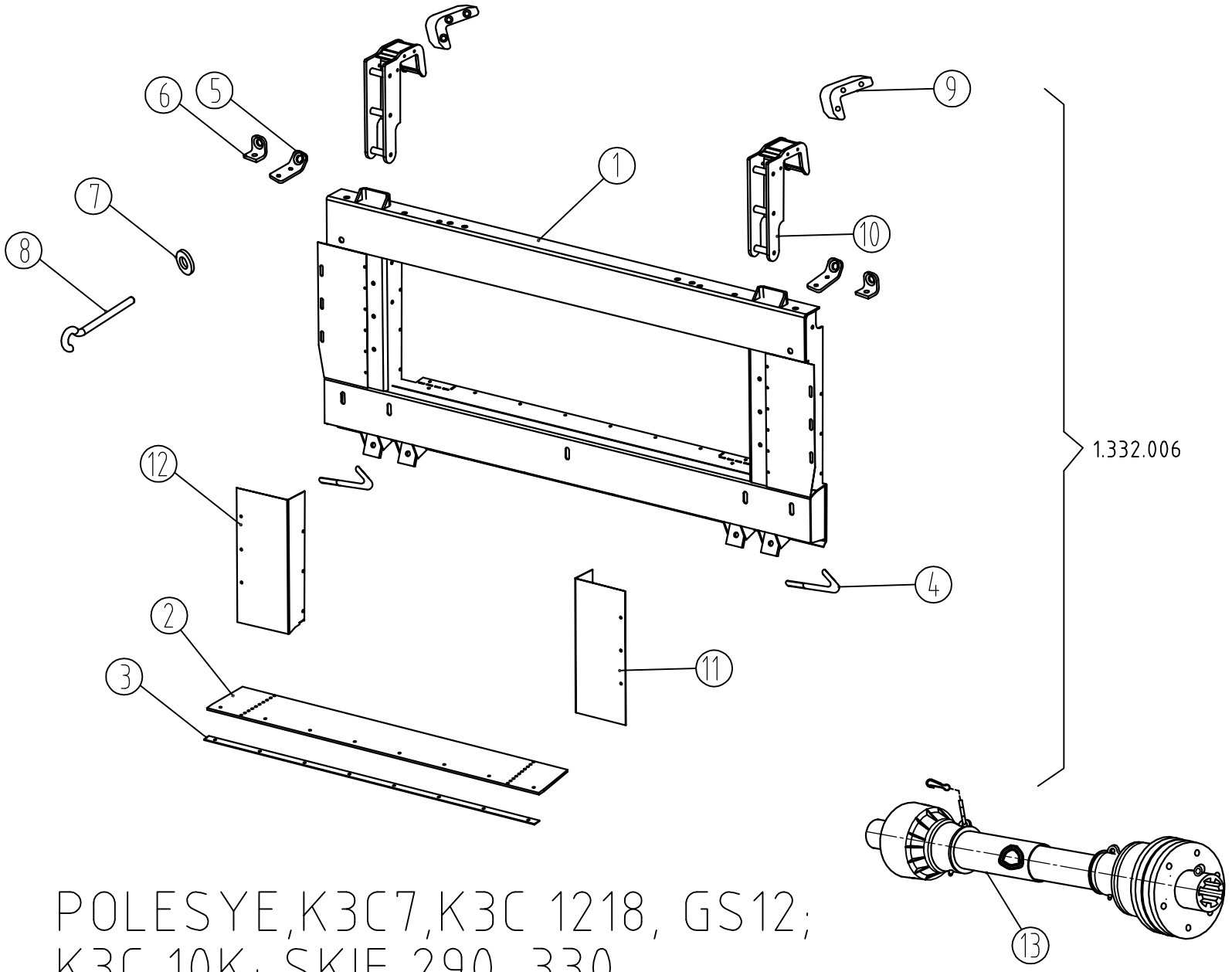

POLESYE,K3C7,K3C 1218, GS12; K3C 10K; SKIF 290-330

2012

MOUNTING KIT: POLESYE, KZSZ-7, 1218, GS 12; KZC 10K; SKIF 290-330

Ref.	Part Number	Description		All models
1	1.329.989	Mounting filler welded		1
2	1.329.565	Rubber plate	→2019	1
2	1.372.965	Rubber plate	2020→	1
3	1.329.566	Lock plate		1
4	1.329.562	Lock screw		2
5	1.332.335	Lock plate 8R		2
6	1.329.567	Lock plate 6R		2
7	1.332.055	Washer		2
8	1.332.056	Hook		2
9	1.329.749	Inlet left		1
9	1.329.750	Inlet right		1
10	1.329.990	Bracket welded		2
11	1.329.997	Seal left		1
12	1.329.998	Seal right		1
13	PTO drive shaft (See page 1 !)			
	1.332.006	Mounting kit (items 1-12)		1

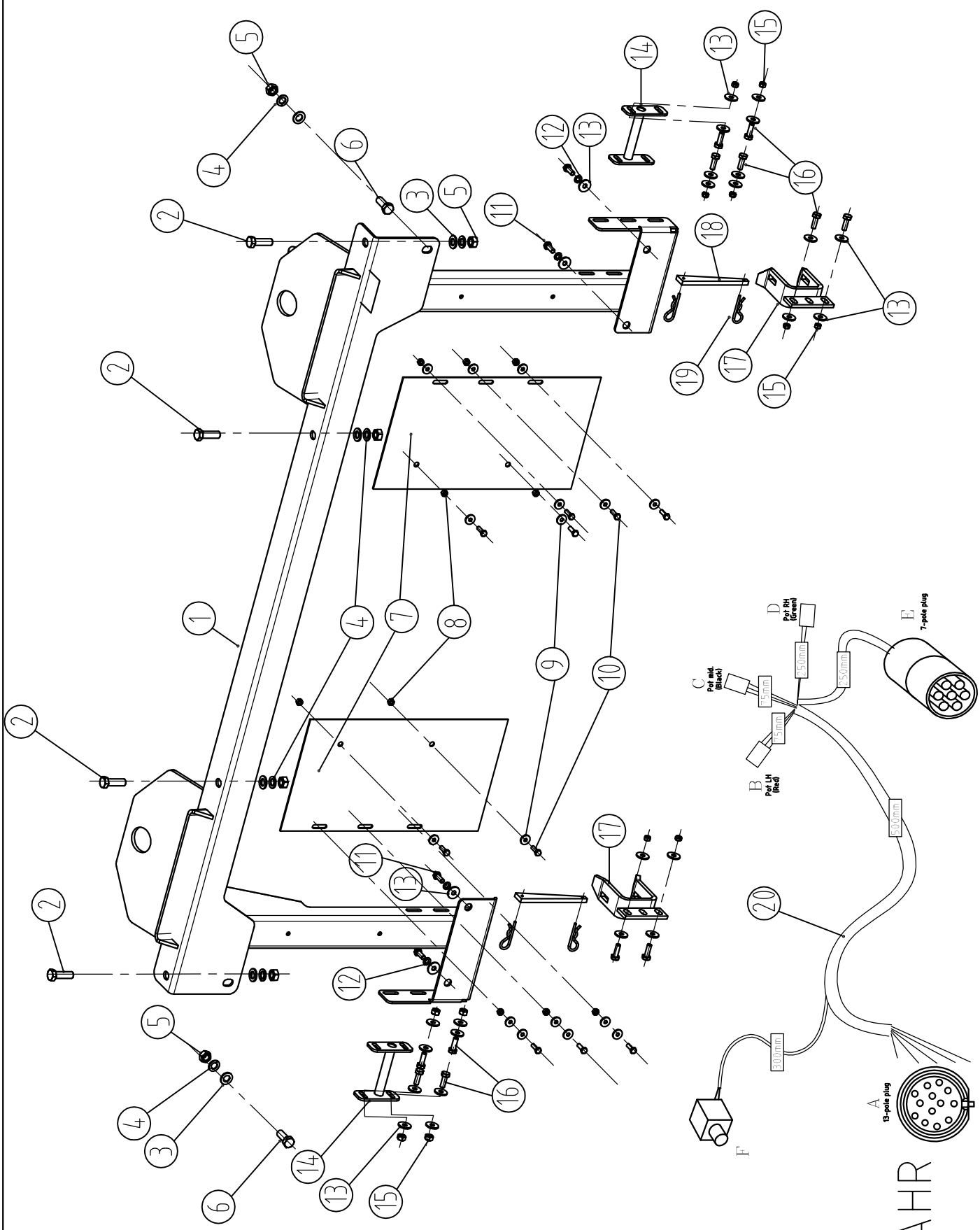
A
13-pole plug
B
Pot LH (Red)
C
Pot mid. (Black)
D
Pot RH (Green)
E
7-pole plug
F
150mm
150mm
150mm
500mm
300mm
FAHR
2018

MOUNTING KIT: DEUTZ FAHR -> 2018

Ref.	Part Number	Description		All models
1	1.372.500	Frame assy		1
2	79416005066	Hex head screw M16x50 DIN 933		4
3	71416000060	Washer M16 17x30x3 DIN 125		6
4	72216000060	Spring washer M16 - DIN128/A		6
5	73516000066	Hex nut M16 DIN 934		6
6	79416004066	Hex head screw M16x40 DIN 933		2
7	1.372.502	Seal		2
8	70708000066	Lock nut M8 - DIN 980		10
9	1.314.099	Washer M8		16
10	79408002566	Hex head screw M8x25 DIN 933		10
11	79410002566	Hex head screw M10x25 DIN 933		4
12	72210000060	Spring washer A10 - DIN 128/A		4
13	96702375920	Washer M10		20
14	1.372.498	Lower retainer welded		2
15	70710000066	Lock nut M10 - DIN 980		8
16	79410003066	Hex head screw M10x30 DIN 933		8
17	1.322.005	Lower retainer welded		2
18	1.300.278	Key-wedge		2
19	673.749.0	Hairpin D=4.5		4
20	1.372.086	Harness		1
	1.332.980	Mounting kit: FAHR (items 1-19)		1

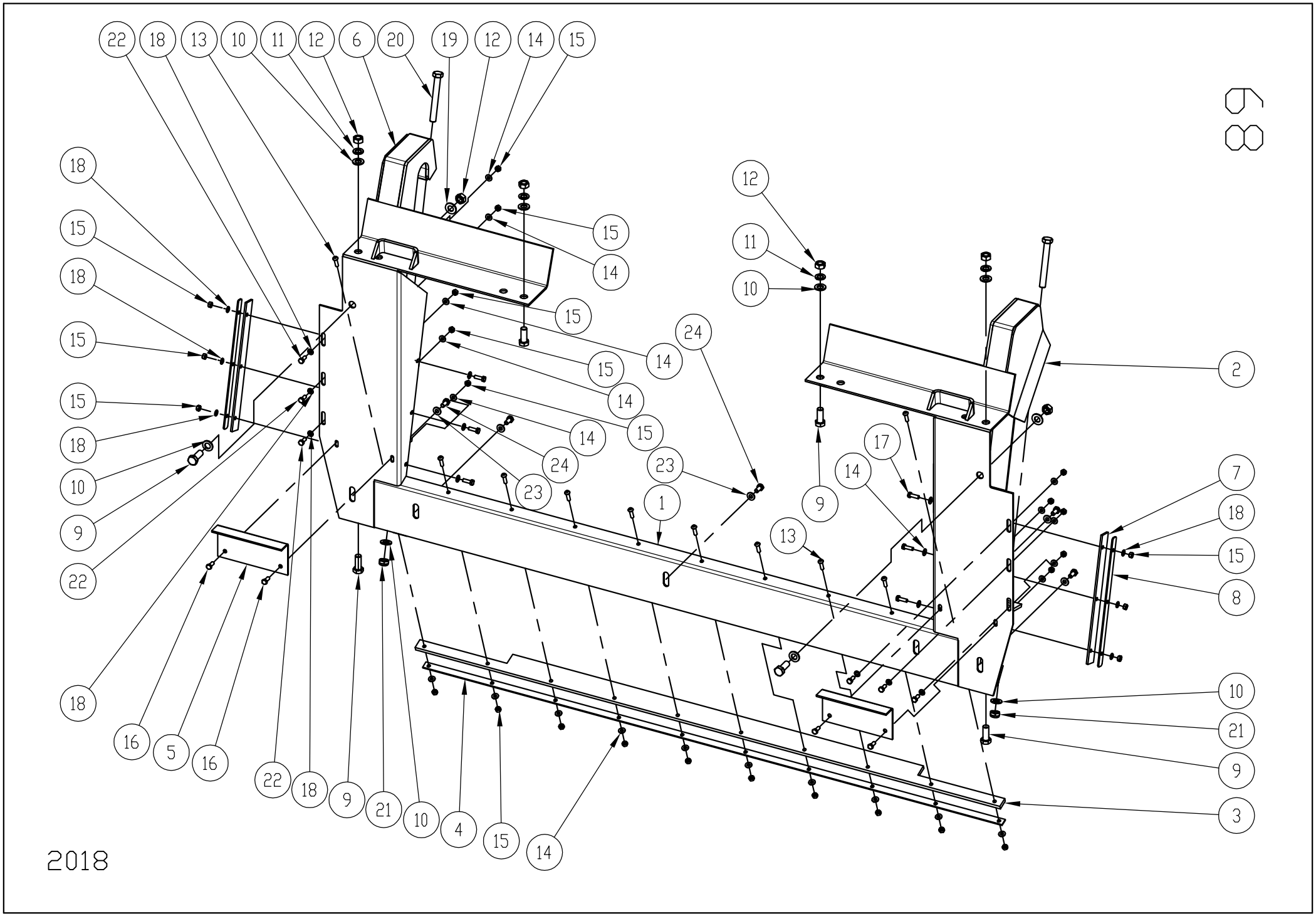
2018

MOUNTING KIT: LIDA 1300

Ref.	Part Number	Description		All models
1	1.320.665	Lower filler welded		1
2	1.322.476	Bracket left		1
3	1.320.667	Rubber plate	→2019	1
3	1.372.967	Rubber plate	2020→	1
4	1.320.666	Retainer plate		1
5	1.372.565	Angle		2
6	1.322.477	Bracket right		1
7	1.320.281	Rubber plate	→2019	2
7	1.372.966	Rubber plate	2020→	2
8	1.320.280	Flat iron		2
9	79416004066	Hex head screw - M16X40		6
10	71416000060	Washer - M16 17X30X3		8
11	72216000060	Spring washer - M16		4
12	73516000066	Lock nut - M16 - DIN934		6
13	79408003066	Hex bolt - M8X30 - DIN933/8.8		10
14	91623938761	Spring washer 8x18 M8		26
15	73508000066	Hex nut - M8 - DIN934		26
16	79408001666	Hex head screw - M8X16 - DIN933/8.8		4
17	79408002566	Hex head screw - M8X25 - DIN933/8.8		6
18	71408000060	Washer - M8 8,4X16X1,6 - DIN125		12
19	91623939161	Spring washer - A16		2
20	79316013066	Hex head screw - M16X130		2
21	74916000066	Hex nut - plastic insert - M16 DIN985		2
22	79408002066	Hex bolt - M8X20 - DIN933/8.8		6
23	91623938861	Spring washer - 10,2X22,25X1,6 - A10		5
24	79310002066	Hex bolt M10x20		5

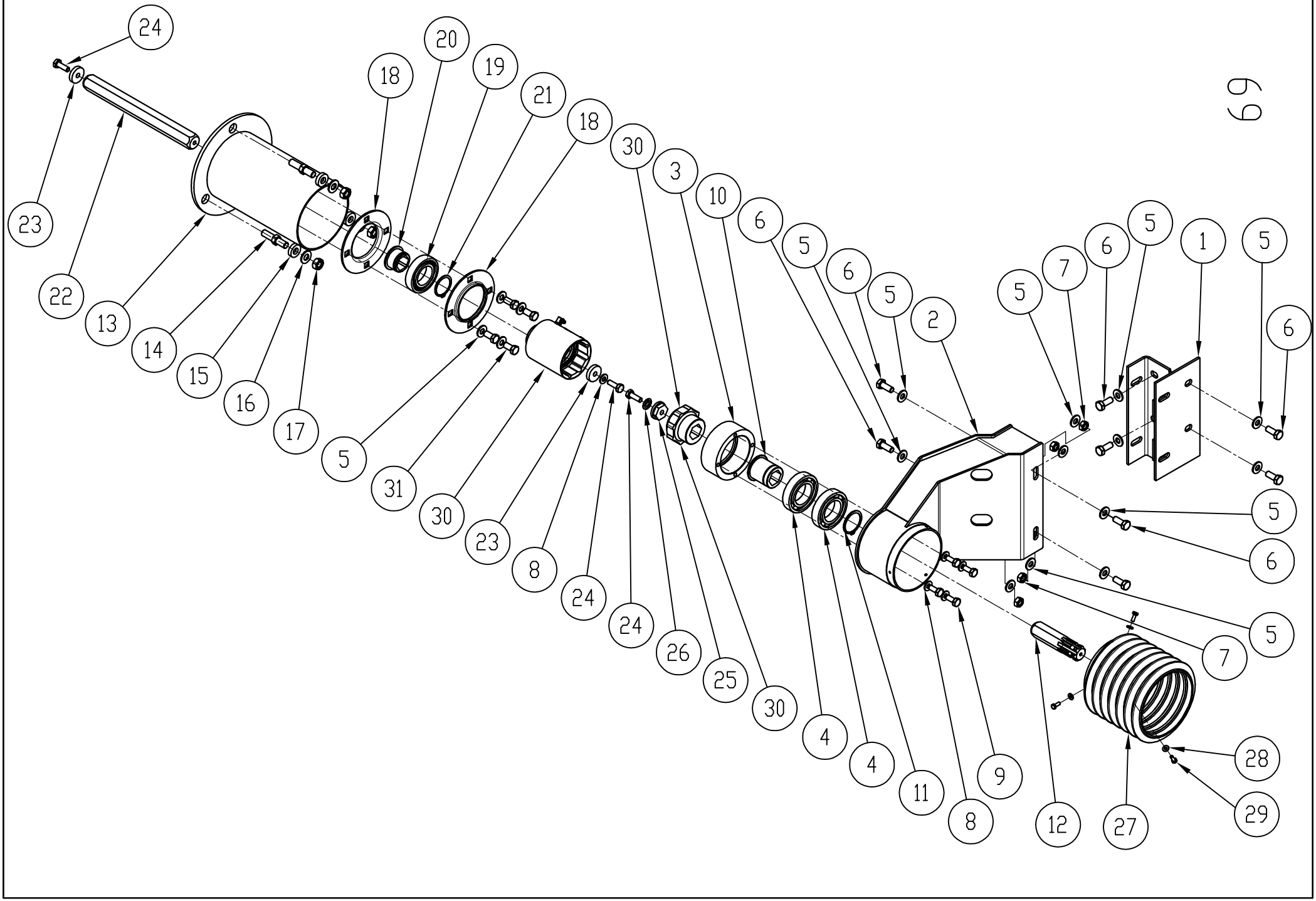
24
23
22
13
14
15
16
17
18
20
19
21
18
5
31
30
23
8
24
24
26
25
30
4
4
11
8
9
30
3
10
6
5
6
5
2
12
27
5
7
6
5
1
5
6
5
6
5
7
28
29

EXTENSION DRIVE 4+2R/70 CM & 5+2R/60 CM

Ref.	Part Number	Description		CLAAS LEXION 440-460, 480, 540-560, 580,600 TUCANO 340, 440-450	JD	NH
1	1.372.309	Support assy LH		1	1	1
1	1.372.310	Support assy RH		1	1	1
2	1.372.394	Bracket welded LH		1	-	-
2	1.372.395	Bracket welded RH		1	-	-
2	1.372.311	Bracket welded LH		-	1	-
2	1.372.312	Bracket welded RH		-	1	-
2	1.372.405	Bracket welded LH		-	-	1
2	1.372.406	Bracket welded RH		-	-	1
3	1.372.297	Bearing housing		2	2	2
4	87000621014	Bearing - 6210 2RS		4	4	4
5	91623938961	Spring washer - A12		32	32	32
6	79412003066	Hex head screw - M12X30 - DIN933/8.8		16	16	16
7	73512000066	Hex nut - M12 - DIN934/8.8		8	8	8
8	91623938861	Spring washer - 10,2X22,25X1,6 - A10		12	12	12
9	79410002566	Hex bolt - M10X25 - DIN933/8.8		8	8	8
10	1.372.298	Hub		2	2	2
11	70200005001	Retaining ring - external - 50X2 - DIN471		2	2	2
12	1.372.371	Input shaft		2	2	2
13	1.372.289	Tube welded - LH		1	1	1
13	1.372.290	Tube welded - RH		1	1	1
14	1.372.426	Bolt		6	6	6
15	1.372.425	Washer		6	6	6
16	91623939061	Spring washer - A14		6	6	6
17	73514000066	Hex nut - M14 - DIN934		6	6	6
18	87300008516	Bearing housing - PF 85		4	4	4
19	87030620914	Y-bearing - 1726209-2RS1 SKF		2	2	2
20	1.375.967	Hub		2	2	2
21	70200004501	Retaining ring - for shaft - 45X1.75 - DIN471		2	2	2
22	1.372.295	Shaft I.		1	1	1
22	1.372.296	Shaft II.		1	1	1
23	1.376.444	Washer		4	4	4
24	79410003066	Hex bolt - M10X30 - DIN933/8.8		6	6	6
25	1.372.317	Inset II		2	2	2
26	71701000060	External tab washer		2	2	2
27	1.372.385	Safety cover		2	2	2
28	91623938661	Spring washer - A6		6	6	6
29	79406001666	Hex head screw - M6X16 - DIN933		6	6	6
30	1.372.278	Clutch		2	2	2
31	79412002566	Hex head screw - M12X25 - DIN933/8.8		8	8	8

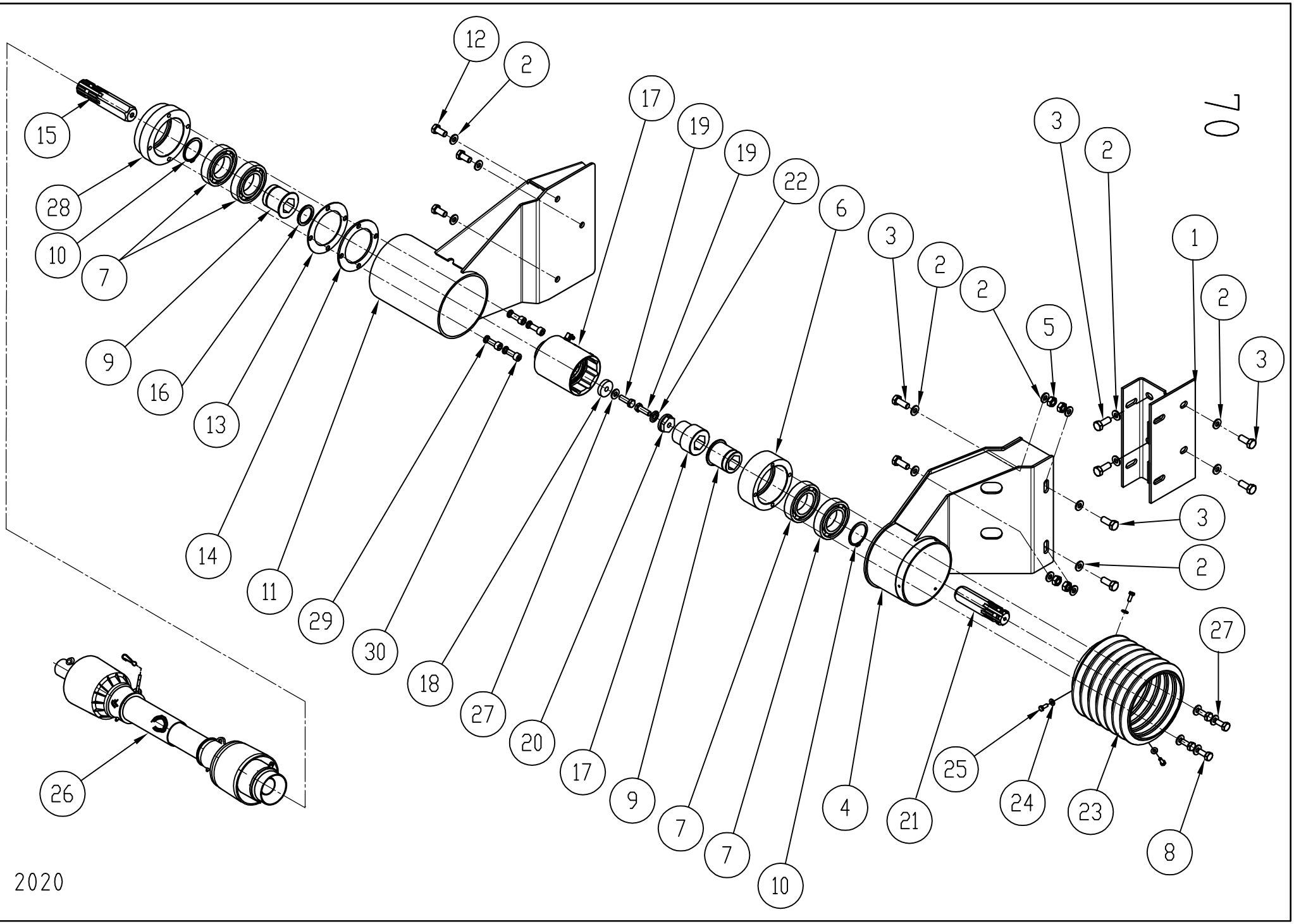
70
2020
1
2
3
4
5
6
7
8
9
10
11
12
13
14
15
16
17
18
19
20
21
22
23
24
25
26
27
28
29
30

EXTENSION DRIVE 4+2X2R/70 CM & 5+2X2R/60 CM

Ref.	Part Number	Description		CLAAS LEXION 440-460, 480, 540-560, 580,600 TUCANO 340, 440-450	JD	NH
1	1.372.309	Support assy LH		1	1	1
1	1.372.310	Support assy RH		1	1	1
2	91623938961	Spring washer - 10,2X22,25X1,6 - A10		30	30	30
3	79412003066	Hex head screw - M12X30 - DIN933/8.8		16	16	16
4	1.372.394	Bracket welded LH		1	-	-
4	1.372.395	Bracket welded RH		1	-	-
4	1.372.311	Bracket welded LH		-	1	-
4	1.372.312	Bracket welded RH		-	1	-
4	1.372.405	Bracket welded LH		-	-	1
4	1.372.406	Bracket welded RH		-	-	1
5	73512000066	Hex nut - M12 - DIN934/8.8		8	8	8
6	1.372.297	Bearing housing		2	2	2
7	87000621014	Bearing - 6210 2RS		8	8	8
8	79410002566	Hex bolt - M10X25 - DIN933/8.8		8	8	8
9	1.372.298	Hub		4	4	4
10	70200005001	Retaining ring - external - 50X2 - DIN471		4	4	4
11	1.372.402	Bracket welded		2	-	-
11	1.372.364	Bracket welded LH		-	1	-
11	1.372.365	Bracket welded RH		-	1	-
11	1.372.413	Bracket welded LH		-	-	1
11	1.372.414	Bracket welded RH		-	-	1
12	79412002566	Hex head screw - M12X25 - DIN933/8.8		6	6	6
13	1.372.392	Shimming plate	→2019	1	1	1
13	1.372.988	Shimming plate	2020→	1	1	1
14	1.372.391	Shimming plate	→2019	1	1	1
14	1.372.987	Shimming plate	2020→	1	1	1
15	1.375.973	Input shaft		2	2	2
16	71637047100	hézagoló alátét 37x47x1		6	6	6
17	1.372.278	Clutch		2	2	2
18	1.376.444	Washer		2	2	2
19	79410003066	Hex bolt - M10X30 - DIN933/8.8		4	4	4
20	1.372.317	Inset II		2	2	2
21	1.372.371	Input shaft		2	2	2
22	71701000060	External tab washer		2	2	2
23	1.372.385	Safety cover		2	2	2
24	91623938661	Spring washer - A6		6	6	6
25	79406001666	Hex head screw - M6X16 - DIN933		6	6	6
26	1.355.608	PTO drive shaft W2400 SD25-510 ASGE 1 3/8"(6)- AG1 3/8" (6)	→2019	2	2	2
26	1.373.696	PTO drive shaft W2400 SD25-510 ASGE 1 3/8"(6)- AG1 3/8" (6) IMF	2020→	2	2	2
27	91623938861	Spring washer - A10		10	10	10
28	1.372.986	Bearing housing	2020→	2	2	2
29	80210002566	Hex socket head cap bolt M10x25 DIN912/8.8	2020→	8	8	8
30	71810000060	Spring washer M10 - DIN7980	2020→	8	8	8

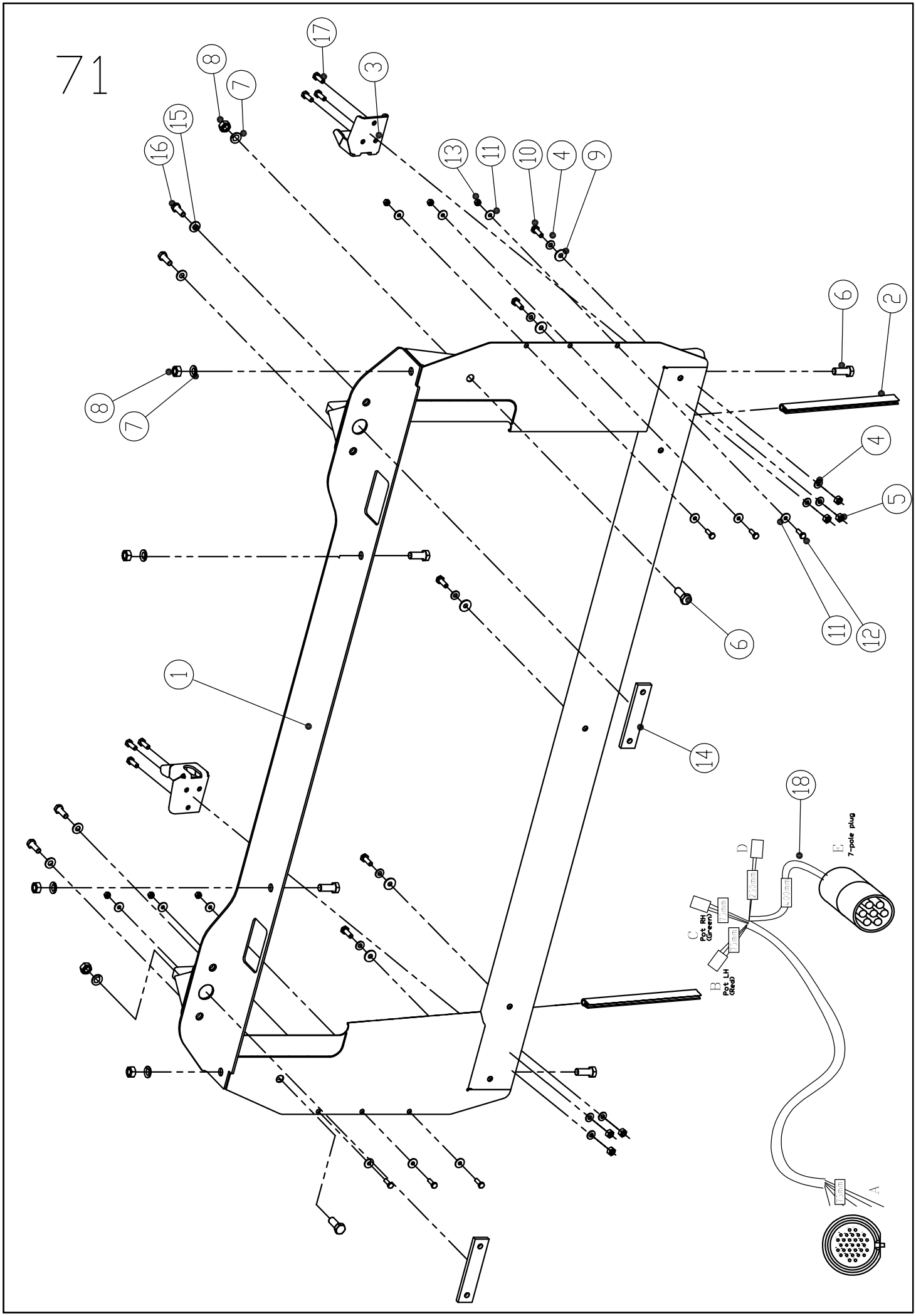
71
17
3
8
7
15
16
13
11
10
4
9
6
2
8
7
4
5
6
11
12
1
14
18
D
E
7-pole plug
C
Pot RH (Green)
B
Pot LH (Red)
A

MOUNTING KIT: IDEAL

Ref.	Part Number	Description		All models
1.	1.372.455	Frame weld		1
2.	1.372.470	Rubber protector		2
3.	1.372.463	Plate		2
4.	91623938861	Spring washer - A10		11
5.	70710000066	Lock nut M10 - DIN 980/8.8		6
6.	79416004066	Hex bolt - M16X40 - DIN933/8.8		6
7.	72216000060	Spring washer M16 - DIN128/A		6
8.	73516000066	Hex nut - M16 - DIN934/8		6
9.	96702375920	Washer M10		5
10.	79410003066	Hex bolt - M10X30 - DIN933/8.8		5
11.	96701314099	Washer M8		12
12.	79408002566	Hex bolt - M8X25 - DIN933/8.8		6
13.	70708000066	Lock nut M8 - DIN 980/8.8		6
14.	1.372.795	Plate		2
15.	91623938961	Spring washer - A12		4
16.	79412003566	Hex bolt - M12X35 - DIN933/8.8		4
17.	79410002566	Hex bolt - M10X25 - DIN933/8.8		6
18.	1.355.966	Harness for AGCO multi-coupler		1
19.	1.372.880	Harness IDEAL		1
	1.372.468	Window Frame Completion Bundle (items 1-17)		1

TORQUE VALUES FOR FASTENERS (Nm)

SIZE	QUALITY		
BOLTS / SCREWS	8.8	10.9	12.9
NUTS	8.	10.	12.
M6	10	14	16
M8	23	33	40
M10	45	63	75
M12	78	110	130
M14	122	175	210
M16	195	270	325
M18	260	370	440
M20	370	525	630
M24	640	900	1080
M30	1260	1800	2160

Part number	Page number
05200000800	3
05200001200	3, 13A
05200001600	5A, 48
05200200024	3, 5A, 13A, 48
25553201007	8, 9, 10
54000111532	55
54005007001	20
60042406090	42
63001803000	61A
63002003009	13A
63003026500	5A, 48
63003030010	5A, 48
63003503500	5A, 13A, 48
63007151500	5A, 48
67210000011	6, 7, 21A, 22A, 23A, 23B
70006001062	7
70006011860	12, 47
70100003201	48
70100003501	5A, 48
70100004001	12, 47
70100004701	8, 9, 10
70100005201	4
70100006201	5A, 13A, 48
70100007201	5A, 13A, 48
70100008001	5A, 13A, 48
70100008501	5A, 48
70110000001	21A, 21B, 21C, 23A, 23B
70200001201	42
70200002501	5A, 13A, 48
70200003001	5A, 13A, 48
70200003201	8, 9, 10
70200003501	5A, 8, 9, 10, 48
70200004001	9, 10
70200004501	8, 9, 10, 48, 69
70200004561	29A, 29B, 29C
70200005001	13A, 69, 70
70200005501	9, 10
70706000026	44
70706000066	54
70708000066	6, 7, 21A, 21B, 21C, 22A, 23A, 23B, 29A, 29B, 29C, 33, 34, 35, 54, 58A, 59, 60, 61A, 63, 67, 71
70710000066	2, 7, 8, 9, 10, 11A, 18A, 21A, 21C, 23A, 23B, 42, 44, 49, 54, 67, 71
70712000066	23A, 23B, 34, 65
70712012563	13A
70716000066	35, 39
70800942558	56A
70808000026	29A, 29B, 54, 57, 58A, 58B, 59, 60, 61A, 63
71400240060	7
71404000060	42
71406000060	42, 44
71408000060	6, 7, 21A, 21C, 23A, 23B, 60, 68
71410000060	8, 9, 10, 11A, 18A, 23B, 44, 49
71412000060	6, 7, 18A, 23A, 34, 54, 65
71416000060	6, 7, 65, 67, 68
71424000060	52
71610513001	3
71610513002	3
71610513005	3
71619026020	5A, 48
71619026050	5A, 48
71619026120	5A, 48
71625035010	5A, 48
71625035020	5A, 48
71625035050	5A, 7, 48
71625035100	7
71625035200	5A, 48
71630042010	5A, 48
71630042020	5A, 48
71630042050	5A, 7, 9, 10, 48
71630042100	7, 9, 10
71632045100	8, 9, 10
71635045010	5A, 48
71635045020	5A, 48
71635045050	5A, 48
71637047100	8, 9, 10, 15A, 15B, 15C, 70
71645055010	5A, 48
71645055020	5A, 48
71645055050	5A, 48
71645055200	48
71650062010	3
71650062020	3
71650062050	3
71663080010	13A
71663080020	13A
71663080050	13A
71701000060	15A, 15B, 15C, 69, 70
71808000060	2A
71810000060	3, 5A, 11A, 23A, 23B, 34, 48, 49, 70
71812000060	3

Part number	Page number
72208000060	21A, 21B, 21C, 22A, 23A, 23B, 29A, 29B, 29C, 33, 34
72210000060	2, 14A, 14B, 15A, 15B, 15C, 67
72216000060	65, 67, 68, 71
72402001660	21B
72402502560	23A, 34
72404002860	18A, 54
73002001601	42
73005000801	11A, 49
73005001601	11A, 49
73005003601	18A
73006005501	47
73006006001	7
73006007001	12
73008003601	18A
73008004006	7
73008006001	7
73010005000	2B
73010005501	47
73010006001	7
73010007001	12
73100104501	43A, 43B
73100105501	47
73100106501	12
73108004001	5A, 43A, 43B
73505000066	58A
73506000066	42, 54
73508000066	2, 6, 7, 8, 9, 10, 16A, 16B, 17A, 20, 21A, 21B, 21C, 22A, 23A, 23B, 25B, 29A, 29B, 29C, 33, 34, 42, 54, 58A, 60, 61A, 63, 68
73510000066	2, 7, 23A, 34, 44
73512000066	6, 7, 35, 69, 70
73514000066	69
73516000066	65, 67, 68, 71
73524000066	41, 52
73612000066	28
74900600066	24A, 24B
74900800066	16A, 24A, 29C
74901000066	43A, 43B
74901200066	5A, 25B, 48
74901400066	11A, 49
74901600066	6, 7
74903000066	61A
74904000066	42
74906000066	21A, 21C, 23A, 23B, 24A, 24A1, 24A2, 24A3, 24A4, 29A, 29B, 29C, 42, 54, 58A, 58B, 59, 60, 63
74908000066	6, 7, 16B, 17A, 21A, 21B, 21C, 22A, 23A, 23B, 26, 42, 54, 55, 57
74910000066	2A, 18A
74912000066	18A, 20, 55
74914000066	18A
74916000066	41, 52, 68
74924000066	52
76308002066	6, 7, 20, 21A, 21C, 22A, 23A, 23B
76308002566	21A, 23A, 23B, 25B, 33, 34
76310003066	43A, 43B
76310003566	11A, 49
77208004560	21A, 21B, 21C, 22A, 23A, 23B
78200802063	6, 7, 21A, 21B, 21C, 22A, 23A, 23B, 33, 34
78200802563	8
78208002563	55
78212003563	21A, 21B, 21C, 22A, 23A, 23B, 33
78212003566	34
79200800160	3
79201601560	5A, 48
79202001560	3
79308004066	21A, 21B, 21C, 22A, 23A, 23B, 33, 34
79308005066	21A, 21C, 23A, 23B
79308005566	21A, 21B, 21C, 23A, 23B, 33, 34
79308007066	21B
79308009063	21A, 21B, 21C, 23A, 23B, 33, 34
79308010063	22A
79308012066	29A, 29B, 29C, 58A, 59, 60, 61A, 63
79310002066	68
79312015066	6, 7
79312016066	25B
79316010066	6, 7
79316013066	68
79316155066	13A
79404001666	42
79405001660	58A
79406001066	2, 2B
79406001666	20, 54, 69, 70
79406002066	21C, 42
79406003066	21A, 23A, 23B

Part number	Page number
79406004066	24A, 24A1, 24A2, 24A3, 24A4
79406004566	24A
79406005066	24A, 24A1, 24A2, 24A3, 24A4, 24B, 42
79408001666	2, 2A, 2B
79408001866	11A, 49
79408002066	2, 2B, 6, 7, 16A, 16B, 17A, 18A, 20, 21A, 21B, 21C, 22A, 23A, 23B, 24A, 33, 34, 43A, 43B, 45, 49, 54, 55, 57, 61A, 68
79408002566	2, 6, 7, 16A, 16B, 20, 21B, 23B, 25B, 26, 29A, 29B, 29C, 33, 34, 35, 43B, 45, 58A, 61A, 63, 67, 68, 71
79408003063	23A, 34
79408003066	21A, 21B, 21C, 22A, 23A, 23B, 29C, 33, 34, 57, 68
79408003566	16A, 16B, 17A, 21A, 21C, 23A, 23B, 42, 58B, 59, 60
79408004066	18A, 21B, 33, 34, 56, 56A
79408004566	7, 21A, 21C, 23A, 23B, 33, 34
79408005066	24A1, 24A2, 24A3, 24A4, 42, 55
79408006066	22A, 23A, 23B, 33, 34
79408006566	21A, 21C, 22A, 23A, 23B
79408008066	21A, 21C
79408010066	45
79410001666	18A
79410002066	7, 8, 9, 10, 11A, 16A, 16B, 17A, 18A, 44, 49, 54
79410002566	7, 8, 9, 10, 11A, 20, 21A, 21B, 21C, 22A, 23A, 23B, 25B, 33, 34, 49, 57, 67, 69, 70, 71
79410003063	11A, 49
79410003066	2, 2A, 7, 8, 9, 10, 15A, 15B, 15C, 49, 67, 69, 70, 71
79410003566	2A
79410004566	11A, 42, 49
79410005566	7, 54
79410006066	18A
79410007066	18A
79412002066	2, 2A
79412002566	69, 70
79412003066	2, 2A, 69, 70
79412003566	11A, 35, 49, 55, 65, 71
79412004566	7
79412005566	18A

Part number	Page number
79412009066	6, 7
79412012066	6, 7
79412125256	47
79414004566	2, 2B
79416003066	43B, 65
79416003566	6, 7
79416004066	67, 68, 71
79416005066	67
80108001266	14A, 14B, 15A, 15B, 15C
80203002062	61A
80206004066	29A, 29B, 29C, 58A, 58B, 59, 60, 63
80208001666	24A, 24A1, 24A2, 24A3, 24A4
80208002066	58A
80208002563	2A
80208002566	55
80208003066	13A
80210002566	70
80210003063	11A, 23A, 34, 49
80210003563	5A, 11A, 23B, 48, 49
80210004063	5A, 48
80210004066	14A, 14B, 15A, 15B, 15C
80212006566	5A, 48
80212035063	3
80214004566	11A, 49
80214006566	11A, 49
80308002062	11A, 23B, 49
80310003063	3
80400602063	13A
80400801266	21C
80400802063	13A, 21B, 22A, 33, 34
80400802563	5A, 48
80400803563	9, 10
80400804063	9, 10
80401002563	7, 12, 44
80401003063	5A, 12, 48
80401004063	8, 9, 10
80404001266	42
80405001603	42
80406003066	44
80408001266	21A, 23A, 23B
80408001666	44
80408005063	21C
80410003566	44
80414005063	4
81106001663	54
81108001663	21A, 42
81108002563	22A

Part number	Page number
81108010063	23B
81110001668	8, 10
81303501366	42
81306301966	54
84208074000	9, 10
84210084000	8, 9, 10
84304001200	45
84348001401	23B
84500000016	6, 7
84501000032	14A, 14B, 15A, 15B, 15C
84503400010	15A
84530000000	11A, 49
84553333520	11A, 49
85609000000	13A
85801001000	5A, 48
85803200500	48
85803500700	13A
85803800700	3
85804000700	12
85804006207	5A, 48
85804055007	5A, 48
85804506208	5A, 48
85804508501	5A, 48
85804572081	13A
85805007208	13A
85805008008	5A, 48
85805080100	3
85805508500	3
85807200700	48
86700000800	40
86700001100	8, 9, 10
86801100000	8, 9, 10
87000003556	8, 9
87000004049	40, 41, 52
87000131262	3
87000140059	9, 10
87000320314	47
87000330314	44
87000420314	12, 47
87000421010	5A, 48
87000620114	42
87000620511	5A
87000620611	13A, 48
87000621010	3, 5A, 48
87000621014	69, 70
87001420710	5A, 48
87001601010	5A, 48
87001620414	8, 9, 10

Part number	Page number
87001620514	4
87001620614	5A, 48
87001620710	13A
87001620810	13A
87001620910	5A, 48
87006191014	13A
87010620214	13A
87010621114	3
87010630510	5A, 48
87013021001	3
87030620514	55
87030620914	8, 9, 10, 69
87100004500	50
87300008516	8, 9, 10, 69
91601111000	42
91623938661	20, 69, 70
91623938761	2, 6, 7, 11A, 16A, 16B, 17A, 18A, 20, 21A, 21B, 21C, 22A, 23A, 23B, 25B, 29A, 29B, 29C, 33, 34, 42, 43A, 43B, 45, 49, 54, 55, 58A, 58B, 59, 60, 61A, 63, 68
91623938861	2, 2A, 7, 8, 9, 10, 11A, 16A, 16B, 17A, 21A, 21B, 21C, 22A, 23A, 23B, 25B, 33, 34, 44, 49, 54, 68, 69, 70, 71
91623938961	2, 2A, 6, 7, 11A, 21A, 21B, 21C, 22A, 23A, 23B, 33, 34, 35, 47, 49, 65, 69, 70, 71
91623939061	2, 2A, 69
91623939161	6, 7, 13A, 43B, 68
91668372320	56, 56A
96700000002	21A, 21C
96700000003	11A, 42, 49
96700000112	8, 9, 10
96701314099	21C, 71
96701320540	8, 9, 10
96702361800	21A, 21C, 23A, 23B, 24A
96702375920	7, 11A, 20, 42, 49, 67, 71
96702378160	24A1, 24A2, 24A3, 24A4
96703800001	24A, 24A1, 24A2, 24A3, 24A4
96714446000	57
96716002720	6, 7, 22A
96716250085	42
96720070601	6, 7, 21A, 21C, 23A, 23B, 33, 34
96789617873	58A

Part number	Page number
96792401700	54
96792685501	54
96799585520	42
96799674430	42
97308040102	56, 56A
97327001370	42
97515182510	42
97909349340	7
716056072030	13A
013.208.3	28
013.268.0	28
1.200.628	43A, 43B
1.201.329	40
1.300.200	15A
1.300.278	64, 67
1.301.068	35, 40, 41, 52
1.301.069	35, 40, 41, 52
1.301.302	40, 41, 52
1.301.433	8, 9, 10
1.301.766	42
1.302.738	40
1.302.884	40
1.302.886	40
1.304.053	40
1.304.143	39
1.304.769	8, 9
1.304.770	8, 9
1.304.802	36
1.304.803	36
1.304.876	8, 9
1.304.893	8, 10
1.304.935	8, 9
1.304.985	39
1.308.132	8, 9
1.308.195	18A, 54
1.308.407	8, 9, 10
1.308.414	9, 10
1.308.783	24A, 24A1, 24A2, 24A3, 24A4, 24B
1.308.786	31
1.308.899	18A
1.308.932	9, 10
1.308.948	9, 10
1.309.011	8, 9, 10
1.309.052	8, 9, 10
1.309.247	3, 5A, 13A, 48
1.309.255	26
1.309.259	9, 10
1.309.377	46

Part number	Page number
1.309.601	24A, 24A1, 24A2, 24A3, 24A4
1.309.604	28, 60
1.310.009	21A, 21C, 23A, 23B, 34
1.310.514	24A, 24A1, 24A2, 24A3, 24A4
1.310.551	18A, 62
1.310.552	62
1.310.553	18A
1.310.554	18A
1.310.780	8, 9, 10
1.310.898	41, 52
1.310.936	52
1.313.536	1, 2, 2A
1.314.099	6, 7, 8, 20, 21A, 21B, 22A, 23A, 23B, 25B, 29A, 29B, 29C, 33, 34, 35, 42, 45, 67
1.314.392	40, 41, 52
1.314.407	41
1.314.508	24A
1.314.509	24A, 24A1, 24A2, 24A3, 24A4, 24B
1.314.510	24A, 24A1, 24A2, 24A3, 24A4, 24B, 28, 29A, 29B, 29C, 58A, 58B, 59, 60, 63
1.314.511	24A1, 24A3, 24A4
1.314.514	28
1.314.572	59
1.314.695	55
1.314.748	40
1.314.987	56A, 59
1.315.006	62
1.315.035	58B, 60
1.315.037	58B
1.315.070	8, 9, 10
1.315.367	40
1.315.408	8, 9
1.315.431	20
1.315.438	31
1.315.439	31
1.315.440	31
1.315.590	31
1.315.692	62
1.315.693	62
1.315.717	20
1.315.891	62
1.315.905	56A, 59
1.315.983	1
1.316.247	40
1.317.719	38

Part number	Page number
1.317.726	38
1.317.750	38
1.318.122	8, 9
1.318.338	7
1.319.154	1
1.319.165	54
1.319.171	54
1.319.232	28
1.319.233	28
1.319.455	7
1.319.873	2
1.320.011	40
1.320.173	40, 41, 52
1.320.253	40
1.320.275	39
1.320.276	37
1.320.277	37
1.320.280	26, 27, 27A, 37, 68
1.320.281	68
1.320.291	39
1.320.426	36
1.320.482	36
1.320.492	8, 9, 10
1.320.493	8, 9, 10
1.320.515	38
1.320.516	38
1.320.540	8, 9, 10
1.320.558	35
1.320.609	65
1.320.665	68
1.320.666	68
1.320.667	68
1.320.686	46
1.320.828	27, 27A
1.320.988	64
1.321.225	27, 27A
1.321.463	62
1.321.464	62
1.321.932	18A
1.322.001	64
1.322.004	64
1.322.005	64, 67
1.322.008	64
1.322.009	64
1.322.010	64
1.322.011	64
1.322.037	6, 7
1.322.329	37

Part number	Page number
1.322.332	37
1.322.333	37
1.322.351	37
1.322.393	39
1.322.394	39
1.322.402	36
1.322.406	38
1.322.437	36
1.322.445	64
1.322.476	68
1.322.477	68
1.322.686	44
1.322.687	44
1.322.689	44
1.322.691	44
1.322.794	55
1.323.320	61A
1.323.321	61A
1.323.323	61A
1.323.324	61A
1.323.327	28
1.323.420	20
1.323.675	62
1.325.440	21A, 22A, 23A, 23B
1.325.892	21A, 22A, 23A, 23B
1.326.221	11A, 49
1.326.285	25A
1.326.286	25A
1.326.502	46
1.326.504	51
1.326.507	51
1.326.519	51
1.326.520	51
1.326.521	51
1.326.522	51
1.326.532	51
1.326.544	37
1.326.673	46
1.326.675	46
1.326.676	46
1.326.681	46
1.326.682	46
1.326.683	46
1.326.684	46
1.326.685	46
1.326.688	46
1.326.689	46
1.326.700	31

Part number	Page number
1.326.701	31
1.326.702	31
1.326.703	31
1.326.704	31
1.326.705	31
1.326.706	31
1.326.707	31
1.326.774	40
1.327.000	29A
1.327.001	29A, 29B, 29C
1.327.002	29A, 29B, 29C
1.327.003	29A, 29B, 29C
1.327.052	29A, 29B, 29C, 56, 56A
1.327.053	29A, 29B, 29C
1.327.054	29A, 29B, 29C
1.327.062	27, 27A
1.327.066	27, 27A
1.327.120	54
1.327.131	54
1.327.148	58A
1.327.486	26, 27, 27A, 37, 51
1.327.487	35
1.327.488	25A, 25B
1.327.495	46
1.327.508	58A
1.327.509	58A
1.327.510	58A
1.327.536	25A
1.327.601	25A
1.327.638	25A, 25B, 27, 27A, 35, 37, 51
1.327.662	25B, 26, 27, 27A, 37, 51
1.327.663	25A, 25B
1.327.664	35
1.327.689	13A, 21A, 23A, 23B
1.327.690	13A
1.327.806	2A
1.327.903	1
1.328.006	21A, 23A
1.328.472	9, 10
1.328.473	9, 10
1.328.479	9, 10
1.328.492	9, 10
1.328.539	26, 27, 27A
1.328.540	51
1.328.541	51
1.328.546	37
1.328.547	25A
1.328.548	25A

Part number	Page number
1.328.549	46
1.328.550	46
1.328.607	18A
1.328.704	40
1.328.831	20
1.328.834	20
1.328.835	20
1.328.843	20
1.328.844	20
1.328.862	33, 34
1.329.066	40
1.329.074	50
1.329.077	40, 41, 52
1.329.097	40
1.329.099	41, 52
1.329.102	40
1.329.103	40
1.329.163	22A, 33, 34
1.329.164	21A, 21B, 21C, 22A, 23A, 23B, 33, 34
1.329.165	35
1.329.166	35
1.329.215	25A
1.329.216	25A
1.329.233	25A
1.329.234	25A
1.329.235	25A
1.329.236	25A
1.329.237	25A
1.329.238	25A
1.329.239	25A
1.329.240	25A
1.329.241	25A
1.329.242	25A
1.329.243	25A
1.329.244	25A
1.329.245	25A
1.329.246	25A
1.329.247	25A, 25B
1.329.250	25A, 25B
1.329.251	25A
1.329.253	25A, 25B
1.329.254	25A
1.329.255	25A
1.329.257	40
1.329.258	40
1.329.268	40, 41
1.329.269	40, 41
1.329.274	40, 41, 52

Part number	Page number
1.329.275	40, 41, 52
1.329.276	40, 41, 52
1.329.277	40, 41, 52
1.329.278	40, 41, 52
1.329.294	25A
1.329.295	25A
1.329.296	25A
1.329.304	52
1.329.305	52
1.329.316	24A4
1.329.329	41
1.329.331	41
1.329.332	41
1.329.341	41
1.329.344	41, 52
1.329.345	41, 52
1.329.359	41
1.329.360	41, 52
1.329.361	41, 52
1.329.362	41, 52
1.329.363	41, 52
1.329.386	27
1.329.387	27
1.329.397	27, 27A
1.329.398	27, 27A
1.329.400	27, 27A
1.329.455	42
1.329.457	42
1.329.458	42
1.329.459	42
1.329.462	42
1.329.463	42
1.329.476	42
1.329.484	26
1.329.485	26
1.329.498	26
1.329.500	26
1.329.501	26
1.329.537	62
1.329.538	62
1.329.539	42
1.329.541	42
1.329.543	42
1.329.562	66
1.329.565	66
1.329.566	66
1.329.567	66
1.329.672	62

Part number	Page number
1.329.720	6, 7
1.329.744	23A, 34
1.329.746	23A, 23B, 34
1.329.747	21A, 21B, 21C, 22A, 23A, 23B, 33, 34, 54
1.329.749	66
1.329.750	66
1.329.847	41, 52
1.329.848	41, 52
1.329.852	41, 52
1.329.854	41, 52
1.329.855	41, 52
1.329.856	41, 52
1.329.859	52
1.329.860	52
1.329.865	52
1.329.866	52
1.329.867	52
1.329.890	56, 56A
1.329.893	41, 52
1.329.906	42
1.329.907	42
1.329.908	42
1.329.909	42
1.329.910	42
1.329.977	35
1.329.989	66
1.329.990	66
1.329.997	66
1.329.998	66
1.330.757	24A, 24A1, 24A2, 24A3
1.330.772	24A, 24A1, 24A2, 24B, 59
1.331.635	57
1.331.640	57
1.331.795	29A, 29B, 29C, 58A, 58B, 59, 60, 63
1.331.808	56, 56A
1.331.811	56A
1.332.006	66
1.332.011	50
1.332.020	50
1.332.029	50
1.332.030	50
1.332.033	50
1.332.035	50
1.332.044	50
1.332.052	50
1.332.055	66
1.332.056	66

Part number	Page number
1.332.059	50
1.332.061	50
1.332.062	50
1.332.063	50
1.332.064	50
1.332.065	58B
1.332.068	50
1.332.078	42
1.332.128	50
1.332.251	31
1.332.335	66
1.332.446	37
1.332.447	37
1.332.458	25A, 25B
1.332.459	42
1.332.461	37
1.332.462	37
1.332.476	40
1.332.478	26
1.332.479	26
1.332.487	50
1.332.515	56, 56A
1.332.781	51
1.332.782	51
1.332.848	40, 41, 50
1.332.849	50, 52
1.332.947	61A
1.332.954	64
1.332.956	61A
1.332.980	67
1.351.163	15A, 15B, 15C
1.351.164	14A, 14B, 15A, 15B, 15C
1.351.178	8, 9, 10
1.351.215	15A, 15B, 15C
1.351.349	8, 9, 10
1.351.355	8, 9, 10
1.351.402	28
1.351.403	58A
1.351.922	28
1.352.495	6, 7
1.352.896	24A
1.353.038	13A
1.353.054	65
1.353.171	8, 9
1.353.172	8, 9
1.353.178	9, 10
1.353.179	9, 10
1.353.195	28, 29A, 29B, 29C, 58B, 59
1.353.204	29A, 29B, 29C, 58A, 58B, 59, 60, 63
1.353.213	29A, 29B, 29C, 58A, 58B, 59, 60, 63
1.353.218	8, 9
1.353.318	24A, 24A1, 24A2, 24A3, 24A4, 29A, 29B, 29C, 58A, 58B, 59, 60, 63
1.353.345	65
1.353.409	51
1.353.411	51
1.353.412	51
1.353.413	51
1.353.414	51
1.353.422	25A, 25B
1.353.461	21A, 21B, 21C, 22A, 23A, 23B, 33, 34
1.353.462	21A, 21B, 21C, 22A, 23A, 23B, 33, 34
1.353.552	29A, 29B, 29C
1.353.553	29A, 29B
1.353.559	27, 27A
1.353.560	8, 9, 10
1.353.561	25A, 25B
1.353.562	27, 27A
1.353.567	8, 10
1.353.568	8, 10
1.353.571	8, 10, 51
1.353.572	8, 10
1.353.573	8, 10, 51
1.353.575	8, 10
1.353.576	8, 10
1.353.577	8, 10
1.353.578	8, 10
1.353.616	8, 9, 10
1.353.732	65
1.353.755	39
1.354.037	6, 7
1.354.076	15B
1.354.106	29A, 29B
1.354.107	29A, 29B, 29C
1.354.171	26
1.354.244	65
1.354.310	21A, 21B, 21C, 22A, 23A, 23B, 33, 34
1.354.381	23A, 23B, 34
1.354.382	23A, 23B, 34
1.354.397	23A, 23B, 24A, 24A1, 24A2, 24A3, 24A4, 34
1.354.511	24A, 24A1, 24A2, 24A3,

Part number	Page number
	24A4
1.354.565	8, 9, 15B
1.354.571	21A, 21C, 23A, 23B, 33, 34
1.354.583	65
1.354.660	14A, 14B, 15A, 15B, 15C
1.354.663	14A, 14B
1.354.667	21A, 21C, 23A, 23B, 33, 34
1.355.038	13A
1.355.039	13A
1.355.187	24A4
1.355.195	21B
1.355.403	14A, 14B, 15A, 15B, 15C
1.355.448	8, 9
1.355.449	8, 9
1.355.452	8, 9
1.355.464	8, 10, 51
1.355.465	8, 10
1.355.468	8, 10
1.355.473	51
1.355.478	51
1.355.479	51
1.355.481	24A, 24A1, 24A2, 24A3, 24A4
1.355.489	29A, 29B, 29C, 58A, 61A, 63
1.355.553	51
1.355.608	70
1.355.690	1
1.355.693	1
1.355.695	1
1.355.697	1
1.355.698	1
1.355.701	1
1.355.702	1
1.355.706	1
1.355.707	1
1.355.709	1
1.355.710	2, 2A
1.355.909	14A, 14B, 15A, 15B, 15C
1.355.920	51
1.355.921	51
1.355.966	37, 51, 71
1.356.016	43A, 43B
1.356.060	29B
1.356.118	24A, 24A1, 24A2, 24A3, 24A4
1.356.208	60

Part number	Page number
1.356.455	8, 10
1.356.471	29A
1.356.529	2, 2A
1.371.093	22A
1.371.093.1	22A
1.371.093.10	22A
1.371.093.2	22A
1.371.093.3	22A
1.371.093.4	22A
1.371.093.5	22A
1.371.093.6	22A
1.371.093.7	22A
1.371.093.8	22A
1.371.093.9	22A
1.371.094	22A
1.371.094.1	22A
1.371.094.10	22A
1.371.094.2	22A
1.371.094.3	22A
1.371.094.4	22A
1.371.094.5	22A
1.371.094.6	22A
1.371.094.7	22A
1.371.094.8	22A
1.371.094.9	22A
1.372.001	21A
1.372.003	21A
1.372.016	1
1.372.017	1
1.372.018	21A, 23B
1.372.019	21A, 23B
1.372.020	21A, 23B
1.372.022	21A, 23B
1.372.040	2A, 2B
1.372.041	2A, 2B
1.372.057	7
1.372.062	7
1.372.063	7
1.372.064	7
1.372.082	23B
1.372.082.1	23B
1.372.082.10	23B
1.372.082.2	23B
1.372.082.3	23B
1.372.082.4	23B
1.372.082.5	23B
1.372.082.6	23B
1.372.082.7	23B

Part number	Page number
1.372.082.8	23B
1.372.082.9	23B
1.372.083	23B
1.372.083.1	23B
1.372.083.10	23B
1.372.083.2	23B
1.372.083.3	23B
1.372.083.4	23B
1.372.083.5	23B
1.372.083.6	23B
1.372.083.7	23B
1.372.083.8	23B
1.372.083.9	23B
1.372.084	23B
1.372.086	64, 67
1.372.092	23B
1.372.093	23B
1.372.100	63
1.372.104	63
1.372.105	63
1.372.107	9
1.372.111	9
1.372.114	9
1.372.116	9
1.372.127	9
1.372.128	9
1.372.129	9
1.372.131	9
1.372.132	62
1.372.136	23B
1.372.137	23B
1.372.142	23B
1.372.143	23B
1.372.148	23B
1.372.149	23B
1.372.151	23B
1.372.152	23B
1.372.154	23B
1.372.164	23B
1.372.165	23B
1.372.180	17A
1.372.181	17A
1.372.182	17A
1.372.183	17A
1.372.184	17A
1.372.185	17A
1.372.186	17A
1.372.187	17A

Part number	Page number
1.372.188	17A
1.372.189	17A
1.372.190	17A
1.372.191	17A
1.372.192	15B
1.372.193	15B
1.372.194	19A
1.372.195	19A
1.372.196	19A
1.372.198	19A
1.372.217	17A
1.372.218	17A
1.372.228	51
1.372.229	51
1.372.230	51
1.372.231	7
1.372.232	7
1.372.245	2A, 2B
1.372.246	2A, 2B
1.372.247	2A
1.372.248	2A, 2B
1.372.250	2A
1.372.251	2A, 2B
1.372.252	46
1.372.259	27, 27A
1.372.260	27, 27A
1.372.268	24A1, 24A3, 24A4
1.372.273	27, 27A
1.372.274	27, 27A
1.372.276	1
1.372.278	69, 70
1.372.280	1
1.372.282	25B
1.372.283	25B
1.372.284	1
1.372.285	42
1.372.287	42
1.372.288	42
1.372.289	69
1.372.290	69
1.372.295	69
1.372.296	69
1.372.297	69, 70
1.372.298	69, 70
1.372.309	69, 70
1.372.310	69, 70
1.372.311	69, 70
1.372.312	69, 70

Part number	Page number
1.372.314	2, 2A
1.372.315	2, 2A, 2B
1.372.317	69, 70
1.372.352	21A, 21B, 21C, 23A, 23B
1.372.353	61A
1.372.355	28
1.372.356	28
1.372.357	28
1.372.358	28
1.372.361	1
1.372.362	1
1.372.363	70
1.372.364	70
1.372.371	2A, 2B, 69, 70
1.372.373	28, 61A
1.372.374	28
1.372.376	55
1.372.376.1	55
1.372.376.10	55
1.372.376.2	55
1.372.376.3	55
1.372.376.5	55
1.372.376.6	55
1.372.376.7	55
1.372.376.8	55
1.372.376.9	55
1.372.377	55
1.372.377.1	55
1.372.377.10	55
1.372.377.2	55
1.372.377.3	55
1.372.377.5	55
1.372.377.6	55
1.372.377.7	55
1.372.377.8	55
1.372.377.9	55
1.372.385	69, 70
1.372.391	70
1.372.392	70
1.372.394	69, 70
1.372.395	69, 70
1.372.402	70
1.372.405	69, 70
1.372.406	69, 70
1.372.413	70
1.372.414	70
1.372.420	56A
1.372.421	56A

Part number	Page number
1.372.422	56A
1.372.425	69
1.372.426	69
1.372.434*	3
1.372.435	2A
1.372.439	2A, 2B
1.372.441	2A, 2B
1.372.442	2A, 2B
1.372.443	2A, 3
1.372.444	2A, 3
1.372.455	71
1.372.463	71
1.372.468	71
1.372.470	71
1.372.475	2B
1.372.476	2B
1.372.477	2B
1.372.478	2B
1.372.479	2B
1.372.481	2B
1.372.498	67
1.372.500	67
1.372.502	67
1.372.509	65
1.372.514	2B
1.372.516	2B
1.372.517	2B
1.372.518	2B
1.372.519	2B
1.372.523	43B
1.372.527	43B
1.372.531	43B
1.372.532	43B
1.372.537	7
1.372.538	7
1.372.539	7
1.372.540	2B
1.372.541	2B
1.372.542	2B
1.372.543	2B
1.372.557	2B
1.372.558	2B
1.372.559	2B
1.372.560	2B
1.372.565	68
1.372.566	22A
1.372.591	57
1.372.592	57

Part number	Page number
1.372.593	57
1.372.594	57
1.372.595	57
1.372.596	1
1.372.597	2B
1.372.602	1
1.372.603	1
1.372.605	1
1.372.609	29C
1.372.630	29C
1.372.631	29C
1.372.632	29C
1.372.644	56A
1.372.645	56A
1.372.646	29C
1.372.647	29C
1.372.648	1
1.372.649	1
1.372.650	1
1.372.652	1
1.372.654	2B
1.372.655	2B
1.372.657	2B
1.372.658	2B
1.372.659	2B
1.372.661	2B
1.372.663	2B
1.372.670	56A
1.372.671	56A
1.372.672	56A
1.372.673	56A
1.372.674	56A
1.372.675	56A
1.372.676	56A
1.372.678	56A
1.372.679	35
1.372.680	25B
1.372.681	51
1.372.682	37
1.372.684	16A, 16B
1.372.685	56A
1.372.686	56A
1.372.687	56A
1.372.688	56A
1.372.692	21C
1.372.694	21C
1.372.696	21C
1.372.698	29B

Part number	Page number
1.372.699	29B
1.372.700	29B
1.372.701	29A
1.372.702	29A
1.372.703	28
1.372.704	28
1.372.705	58A
1.372.706	58A
1.372.707	59
1.372.708	59
1.372.709	2A
1.372.710	2A
1.372.711	2A
1.372.712	2A
1.372.713	2A
1.372.714	2A
1.372.715	2A
1.372.716	2A
1.372.717	2A
1.372.718	6
1.372.745	16A
1.372.749	8
1.372.750	8
1.372.755	19A
1.372.756	19A
1.372.758	19A
1.372.759	19A
1.372.761	24B
1.372.762	24B
1.372.764	14A
1.372.765	16A
1.372.766	16A
1.372.767	16A
1.372.768	16A
1.372.769	16A
1.372.770	16A
1.372.771	16A
1.372.778	56A
1.372.779	56A
1.372.780	56A
1.372.787	65
1.372.795	71
1.372.803	56A
1.372.804	56A
1.372.805	56A
1.372.806	56A
1.372.807	56A
1.372.808	56A

Part number	Page number
1.372.809	56A
1.372.810	56A
1.372.816	21C
1.372.818	29C
1.372.819	29C
1.372.820	29C
1.372.821	56A
1.372.835	54
1.372.836	31
1.372.837	31
1.372.861	22A, 23A, 23B
1.372.862	22A, 23A, 23B
1.372.865	45
1.372.866	45
1.372.872	6, 7
1.372.873	6, 7
1.372.874	6, 7
1.372.878	1
1.372.879	1
1.372.880	71
1.372.888	21A, 21B, 21C
1.372.889	31
1.372.890	31
1.372.893	21C
1.372.907	6, 7
1.372.908	6, 7
1.372.913	45
1.372.914	45
1.372.915	21C
1.372.916	31
1.372.920	8
1.372.921	8
1.372.924	8
1.372.925	8
1.372.926	8
1.372.927	8
1.372.928	8
1.372.929	8
1.372.934	15C
1.372.937	16A, 16B, 17A
1.372.939	8
1.372.940	25B
1.372.941	25B
1.372.944	8, 9, 10
1.372.945	21A
1.372.946	45
1.372.947	25A
1.372.948	25A

Part number	Page number
1.372.949	25A
1.372.950	26, 27, 27A
1.372.951	26
1.372.952	27, 27A
1.372.953	37
1.372.954	51
1.372.955	51
1.372.956	36
1.372.957	38
1.372.958	40, 41, 50
1.372.959	46
1.372.960	46
1.372.961	50
1.372.962	50, 52
1.372.963	64
1.372.964	64
1.372.965	66
1.372.966	68
1.372.967	68
1.372.986	70
1.372.987	70
1.372.988	70
1.373.044	31
1.373.045	8, 9, 10
1.373.046	8, 9, 10
1.373.070	6
1.373.082	16B
1.373.083	16B
1.373.084	19A
1.373.085	19A
1.373.088	8
1.373.100	6
1.373.113	16B
1.373.114	16B
1.373.115	16B
1.373.116	16B
1.373.117	19A
1.373.118	19A
1.373.121	8
1.373.130	42
1.373.136	42
1.373.137	42
1.373.138	42
1.373.139	16A
1.373.140	16A
1.373.141	16A
1.373.142	16A
1.373.143	16A

Part number	Page number
1.373.144	16A
1.373.145	16A
1.373.146	16A
1.373.147	16A
1.373.148	21A
1.373.151	21A
1.373.152	21A
1.373.153	21A
1.373.155	16A
1.373.156	16A
1.373.157	16A
1.373.158	16A
1.373.167	16A
1.373.168	16A
1.373.169	16A
1.373.170	16A
1.373.275	56, 56A
1.373.276	56, 56A
1.373.277	56, 56A
1.373.278	56, 56A
1.373.279	56, 56A
1.373.280	56, 56A
1.373.281	56, 56A
1.373.282	56, 56A
1.373.283	56, 56A
1.373.284	56, 56A
1.373.285	56, 56A
1.373.286	56, 56A
1.373.287	56, 56A
1.373.288	56, 56A
1.373.289	56, 56A
1.373.290	56, 56A
1.373.293	17A
1.373.294	17A
1.373.295	17A
1.373.296	17A
1.373.297	17A
1.373.298	17A
1.373.299	17A
1.373.300	17A
1.373.301	17A
1.373.302	17A
1.373.304	24A2, 24A4
1.373.305	24A2, 24A4
1.373.306	24A4
1.373.307	24A4
1.373.308	24A4
1.373.309	24A4

Part number	Page number
1.373.310	24A4
1.373.311	24A4
1.373.312	24A4
1.373.313	24A1, 24A2, 24A3, 24A4
1.373.314	24A1, 24A2, 24A3, 24A4
1.373.315	24A1, 24A2, 24A3, 24A4
1.373.316	24A4
1.373.317	24A4
1.373.318	24A4
1.373.319	24A4
1.373.320	24A4
1.373.321	24A4
1.373.322	24A4
1.373.323	24A4
1.373.324	24A4
1.373.325	24A4
1.373.326	24A4
1.373.327	24A1, 24A2, 24A3, 24A4
1.373.328	24A1, 24A3, 24A4
1.373.329	24A1, 24A3, 24A4
1.373.330	24A1, 24A3, 24A4
1.373.331	24A1, 24A3, 24A4
1.373.332	24A4
1.373.336	23A
1.373.337	23A
1.373.339	23A
1.373.341	23A
1.373.354	7
1.373.355	7
1.373.356	7
1.373.387	5A, 48
1.373.426	49
1.373.433	7
1.373.434	7
1.373.449	24A, 24A1, 24A2, 24A3, 24A4, 24B
1.373.462	9
1.373.463	9
1.373.464	9
1.373.465	9
1.373.470	17A
1.373.471	17A
1.373.472	17A
1.373.473	17A
1.373.474	17A
1.373.475	17A
1.373.478	15A
1.373.481	21A, 23B
1.373.483	21A

Part number	Page number
1.373.487	21A, 23A
1.373.488	24A, 24A1, 24A2, 24A3, 24A4, 24B
1.373.490	21A
1.373.506	21C
1.373.506.1	21C
1.373.506.10	21C
1.373.506.2	21C
1.373.506.3	21C
1.373.506.4	21C
1.373.506.5	21C
1.373.506.6	21C
1.373.506.7	21C
1.373.506.8	21C
1.373.506.9	21C
1.373.507	21C
1.373.507.1	21C
1.373.507.10	21C
1.373.507.2	21C
1.373.507.3	21C
1.373.507.4	21C
1.373.507.5	21C
1.373.507.6	21C
1.373.507.7	21C
1.373.507.8	21C
1.373.507.9	21C
1.373.508	21A, 23B
1.373.508.1	21A, 23B
1.373.508.10	21A, 23B
1.373.508.2	21A, 23B
1.373.508.3	21A, 23B
1.373.508.4	21A, 23B
1.373.508.5	21A, 23B
1.373.508.6	21A, 23B
1.373.508.7	21A, 23B
1.373.508.8	21A, 23B
1.373.508.9	21A, 23B
1.373.510	7
1.373.511	7
1.373.512	7
1.373.513	7
1.373.542	17A
1.373.543	17A
1.373.544	17A
1.373.545	17A
1.373.546	17A
1.373.547	17A
1.373.548	17A
1.373.549	17A
1.373.550	17A
1.373.551	17A
1.373.555	9
1.373.556	19A
1.373.557	19A
1.373.559	9
1.373.563	50
1.373.576	24A3
1.373.577	24A1, 24A2, 24A3
1.373.578	24A3
1.373.579	24A3
1.373.580	24A3
1.373.581	24A3
1.373.582	24A3
1.373.583	24A1, 24A2, 24A3
1.373.584	24A1, 24A2, 24A3
1.373.585	24A, 24A1, 24A2, 24A3, 24A4, 24B
1.373.586	7
1.373.590	23A
1.373.591	23A
1.373.592	23A
1.373.593	23A
1.373.594	56A
1.373.595	23A
1.373.596	23A
1.373.599	56A
1.373.612	23A
1.373.613	23A
1.373.614	23A
1.373.615	23A
1.373.618	24A4
1.373.619	16A, 16B, 17A
1.373.623	15A
1.373.648	18A
1.373.656	2A
1.373.662	7
1.373.663	7
1.373.664	7
1.373.665	23B
1.373.666	23B
1.373.670	47, 49
1.373.671	47, 49
1.373.675	2A, 2B
1.373.676	2A, 2B
1.373.677	2A
1.373.678	2A
1.373.681	2A, 2B
1.373.682	2A, 2B

Part number	Page number
1.373.690	1
1.373.691	1
1.373.692	1
1.373.693	1
1.373.694	1
1.373.695	1
1.373.696	70
1.373.697	1
1.373.699	1
1.373.700	1
1.373.702	1
1.373.703	1
1.373.704	1
1.373.707	1
1.373.708	1
1.373.709	1
1.373.724	7
1.373.725	18A, 24A1, 24A2, 24A3, 24A4, 24B
1.373.730	18A
1.373.732	19A
1.373.733	19A
1.373.734	49
1.373.738	49
1.373.740	11A, 49
1.373.742	7
1.373.749	21A, 23A, 23B
1.373.751	6, 7
1.373.767	22A
1.373.768	22A
1.373.772	22A
1.373.773	22A
1.373.774	24A1
1.373.775	24A1
1.373.776	24A1
1.373.777	24A1
1.373.778	7
1.373.779	7
1.373.780	7
1.373.810	17A
1.373.811	17A
1.373.812	17A
1.373.813	17A
1.373.814	17A
1.373.825	7
1.373.826	7
1.373.827	7
1.373.828	7
1.373.829	7

Part number	Page number
1.373.847	17A
1.373.870	3
1.373.871	3
1.373.876	10
1.373.877	10
1.373.878	10
1.373.882	10
1.373.883	10
1.373.884	10
1.373.885	10
1.373.890	14A, 15A
1.373.898	2A, 3
1.373.899	24A2
1.373.900	24A2
1.373.901	24A2
1.373.902	24A2
1.373.903	24A2
1.373.907	24A2
1.373.908	24A2
1.373.909	19A
1.373.910	19A
1.373.911	19A
1.373.912	19A
1.373.917	24A2
1.373.919	19A
1.373.920	19A
1.373.923	19A
1.373.924	19A
1.373.927	19A
1.373.928	19A
1.373.929	19A
1.373.933	19A
1.373.934	19A
1.373.937	19A
1.373.938	19A
1.373.950	23B
1.373.951	23B
1.373.957	17A
1.373.958	17A
1.373.959	17A
1.373.960	17A
1.373.961	17A
1.373.962	17A
1.373.963	17A
1.373.964	17A
1.373.965	17A
1.373.966	17A
1.373.967	17A

Part number	Page number
1.373.970	24A2
1.373.971	24A2
1.373.973	24A2
1.373.974	24A2
1.373.975	24A2
1.373.976	17A
1.373.977	17A
1.373.978	17A
1.373.979	17A
1.373.980	17A
1.373.981	17A
1.373.982	17A
1.373.983	17A
1.373.984	17A
1.373.985	17A
1.373.986	17A
1.373.991	24A, 24A1, 24A2, 24A3, 24A4, 24B
1.373.992	19A
1.373.995	17A
1.373.996	17A
1.373.997	22A
1.373.998	22A
1.375.019	5A, 7, 48
1.375.025	5A, 48
1.375.134	7
1.375.138	7
1.375.144	7, 24A, 24A1, 24A3, 24A4
1.375.180	7
1.375.181	7
1.375.182	7
1.375.192	7
1.375.203	8, 9, 10
1.375.415	1
1.375.417	1
1.375.428	8, 9, 10
1.375.429	8, 9, 10
1.375.430	8, 9, 10
1.375.431	8, 9, 10
1.375.497	18A
1.375.615	24A1
1.375.667	63
1.375.669	24A, 24A1, 24A2, 24A3, 24A4, 24B
1.375.687	5A, 48
1.375.688	5A, 48
1.375.689	5A, 48
1.375.691	5A
1.375.692	5A

Part number	Page number
1.375.693	5A, 48
1.375.694	5A, 48
1.375.695	5A, 48
1.375.696	5A, 48
1.375.697	5A, 48
1.375.698	5A, 48
1.375.699	5A, 48
1.375.700	5A, 48
1.375.701	13A
1.375.702	13A
1.375.703	5A, 48
1.375.706	5A, 48
1.375.708	5A
1.375.710	5A, 48
1.375.712	5A, 48
1.375.717	5A, 48
1.375.722	5A, 48
1.375.723	5A, 48
1.375.743	13A
1.375.744	5A, 13A, 48
1.375.746	5A, 48
1.375.752	13A
1.375.754	5A, 48
1.375.755	4, 11A, 44, 49
1.375.756	4
1.375.757	4
1.375.758	4
1.375.760	4
1.375.761	4
1.375.762	4
1.375.772	18A, 19A
1.375.800	11A, 49
1.375.801	11A, 49
1.375.813	11A, 49
1.375.819	11A, 49
1.375.822	11A, 49
1.375.832	11A, 49
1.375.833	11A, 49
1.375.836	5A, 48
1.375.913	9
1.375.947	11A, 49
1.375.955	5A, 48
1.375.957	21A, 21B, 21C, 33
1.375.958	21A, 21B, 21C, 33
1.375.965	8, 9, 10
1.375.966	8, 9, 10
1.375.967	8, 9, 10, 69
1.375.968	8, 9, 10

Part number	Page number
1.375.969	8, 9, 10
1.375.973	2, 2A, 2B, 70
1.375.974	2, 2A
1.376.000	18A
1.376.003	18A
1.376.006	18A
1.376.007	16A, 17A
1.376.020	8, 9, 10
1.376.039	23A
1.376.040	23A
1.376.041	23A
1.376.042	23A
1.376.043	23A, 34
1.376.044	23A, 34
1.376.067	11A, 49
1.376.068	2, 2A, 3
1.376.069	2, 2A, 3
1.376.070	2, 2A, 3
1.376.071	3
1.376.072	3
1.376.073	3
1.376.074	3
1.376.075	3
1.376.076	3
1.376.077	3
1.376.078	3
1.376.079	3
1.376.085	33
1.376.089	33, 34
1.376.095	22A
1.376.095.1	22A
1.376.095.10	22A
1.376.095.2	22A
1.376.095.3	22A
1.376.095.4	22A
1.376.095.5	22A
1.376.095.6	22A
1.376.095.7	22A
1.376.095.8	22A
1.376.095.9	22A
1.376.096	22A
1.376.096.1	22A
1.376.096.10	22A
1.376.096.2	22A
1.376.096.3	22A
1.376.096.4	22A
1.376.096.5	22A
1.376.096.6	22A

Part number	Page number
1.376.096.7	22A
1.376.096.8	22A
1.376.096.9	22A
1.376.097	21A, 23A
1.376.097.1	21A, 23A
1.376.097.10	21A, 23A
1.376.097.2	21A, 23A
1.376.097.3	21A, 23A
1.376.097.4	21A, 23A
1.376.097.5	21A, 23A
1.376.097.6	21A, 23A
1.376.097.7	21A, 23A
1.376.097.8	21A, 23A
1.376.097.9	21A, 23A
1.376.099	21A, 23A, 33, 34
1.376.099.1	21A, 23A
1.376.099.10	21A, 23A
1.376.099.2	21A, 23A
1.376.099.3	21A, 23A
1.376.099.4	21A, 23A
1.376.099.5	21A, 23A
1.376.099.6	21A, 23A
1.376.099.7	21A, 23A
1.376.099.8	21A, 23A
1.376.099.9	21A, 23A
1.376.100	33, 34
1.376.104	18A, 24B
1.376.105	18A
1.376.122	6
1.376.123	6
1.376.124	6
1.376.125	6
1.376.126	6
1.376.127	16A, 16B, 17A
1.376.129	33, 34
1.376.130	33, 34
1.376.131	16A, 16B, 17A
1.376.214	8
1.376.215	8
1.376.216	8
1.376.217	8
1.376.228	8
1.376.229	8
1.376.230	8
1.376.231	8
1.376.232	8, 9, 10
1.376.233	8, 9, 10
1.376.238	8, 9, 10

Part number	Page number
1.376.241	8, 10
1.376.278	7, 24A, 24A1, 24A3, 24A4
1.376.292	7
1.376.293	7
1.376.294	7
1.376.295	7
1.376.296	7
1.376.320	9
1.376.321	9
1.376.322	9
1.376.323	9
1.376.324	10
1.376.325	10
1.376.326	10
1.376.363	9
1.376.364	9
1.376.365	9
1.376.369	9
1.376.370	9
1.376.371	7, 9, 10
1.376.372	7, 9, 10
1.376.373	7, 9, 10
1.376.374	7, 9, 10
1.376.377	10
1.376.378	10
1.376.379	10
1.376.380	10
1.376.382	7
1.376.385	7
1.376.436	2, 2A, 2B
1.376.444	2, 2A, 2B, 69, 70
1.376.445	2, 2A
1.376.446	2, 2A
1.376.448	7
1.376.484	7
1.376.485	7
1.376.490	14A, 14B, 15A, 15B, 15C
1.376.491	6, 7
1.376.497	61A
1.376.499	65
1.376.501	14A
1.376.502	14A, 14B, 15A, 15B
1.376.503	14A, 14B, 15A
1.376.504	14A
1.376.505	14A, 14B
1.376.506	14A, 14B, 15A, 15B
1.376.516	15A, 15B, 15C
1.376.517	14A, 14B, 15A, 15B

Part number	Page number
1.376.519	14B, 15A, 15B, 15C
1.376.541	25B
1.376.542	25B
1.376.547	25B
1.376.548	25B
1.376.561	7
1.376.562	15A, 15C
1.376.564	7
1.376.565	7
1.376.573	7
1.376.599	16A, 16B, 17A
1.376.600	16A, 16B, 17A
1.376.629	7
1.376.633	7
1.376.634	7
1.376.635	7
1.376.662	22A
1.376.663	22A
1.376.676	22A
1.376.677	22A
1.376.691	20
1.376.693	22A
1.376.693.1	22A
1.376.693.10	22A
1.376.693.2	22A
1.376.693.3	22A
1.376.693.4	22A
1.376.693.5	22A
1.376.693.6	22A
1.376.693.7	22A
1.376.693.8	22A
1.376.693.9	22A
1.376.694	22A
1.376.694.1	22A
1.376.694.10	22A
1.376.694.2	22A
1.376.694.3	22A
1.376.694.4	22A
1.376.694.5	22A
1.376.694.6	22A
1.376.694.7	22A
1.376.694.8	22A
1.376.694.9	22A
1.376.699	20
1.376.700	21A
1.376.700.1	21A
1.376.700.10	21A
1.376.700.2	21A

Part number	Page number
1.376.700.3	21A
1.376.700.4	21A
1.376.700.5	21A
1.376.700.6	21A
1.376.700.7	21A
1.376.700.8	21A
1.376.700.9	21A
1.376.701	20
1.376.721	22A
1.376.722	22A
1.376.729	20
1.376.747	21A, 21B, 21C, 23A, 23B, 33, 34
1.376.752	2, 2A, 2B
1.376.776	34
1.376.777	34
1.376.783	3, 13A
1.376.793	21A, 23A, 23B, 33, 34
1.376.795	24A, 24B
1.376.796	24A
1.377.000	6, 7
1.377.005	6, 7
1.377.013	23A, 34
1.377.015	23A, 34
1.377.018	23A, 34
1.377.019	23A, 34
1.377.020	23A, 34
1.377.021	24A2
1.377.022	23A, 34
1.377.023	23A
1.377.024	23A
1.377.025	23A
1.377.026	23A
1.377.048	15A
1.377.061	24A, 24A1, 24A2, 24A3, 24A4, 24B
1.377.062	24A, 24A1, 24A2, 24A3, 24A4, 24B
1.377.063	24A
1.377.064	24A
1.377.065	24A, 24B
1.377.066	24A, 24B
1.377.072	24A, 24A1, 24A2, 24A3, 24B
1.377.073	24A, 24A1, 24A2, 24A3, 24B
1.377.074	24A, 24A1, 24A3
1.377.076	24A, 24A1, 24A2, 24A3
1.377.086	22A

Part number	Page number
1.377.087	22A
1.377.088	11A, 44, 49
1.377.089	24A
1.377.093	5A, 48
1.377.095	13A
1.377.100	7
1.377.102	7
1.377.105	2, 2A, 2B
1.377.106	2, 2A, 2B
1.377.108	7
1.377.119	9
1.377.123	15A, 15B
1.377.125	14B, 15A, 15B
1.377.137	44
1.377.138	44
1.377.142	44
1.377.144	44
1.377.145	44
1.377.146	44
1.377.161	44
1.377.162	44
1.377.163	44
1.377.164	8, 9, 10
1.377.171	7
1.377.181	7
1.377.183	9
1.377.192	34
1.377.193	34
1.377.196	34
1.377.199	23A, 34
1.377.200	23A, 34
1.377.201	23A
1.377.202	23A
1.377.213	23A, 34
1.377.214	23A, 34
1.377.215	23A, 34
1.377.216	23A, 34
1.377.219	33, 34
1.377.222	7
1.377.225	33, 34
1.377.229	33
1.377.243	48
1.377.244	48
1.377.247	47
1.377.250	47
1.377.251	11A, 29A, 29B, 29C, 47, 49
1.377.253	31
1.377.258	12

Part number	Page number
1.377.265	3
1.377.266	49
1.377.267	49
1.377.268	4
1.377.271	8, 9, 10
1.377.272	8, 9, 10
1.377.274	31
1.377.275	31
1.377.288	31
1.377.297	12, 47
1.377.298	12, 47
1.377.299	12
1.377.300	12
1.377.338	16A, 17A
1.377.339	16A
1.377.340	16A
1.377.341	16A, 17A
1.377.342	16A
1.377.343	16A
1.377.344	16A
1.377.345	16A
1.377.346	16A
1.377.347	16A
1.377.348	16A
1.377.349	16A
1.377.350	17A
1.377.351	17A
1.377.354	17A
1.377.355	17A
1.377.356	17A
1.377.357	17A
1.377.362	16A, 17A
1.377.363	16A, 17A
1.377.364	16A, 17A
1.377.365	16A, 17A
1.377.372	16A, 16B, 17A
1.377.380	21A, 23A
1.377.380.1	21A, 23A
1.377.380.10	21A, 23A
1.377.380.2	21A, 23A
1.377.380.3	21A, 23A
1.377.380.4	21A, 23A
1.377.380.5	21A, 23A
1.377.380.6	21A, 23A
1.377.380.7	21A, 23A
1.377.380.8	21A, 23A
1.377.380.9	21A, 23A
1.377.382	45

Part number	Page number
1.377.382.1	45
1.377.382.10	45
1.377.382.2	45
1.377.382.3	45
1.377.382.4	45
1.377.382.5	45
1.377.382.6	45
1.377.382.7	45
1.377.382.8	45
1.377.382.9	45
1.377.383	45
1.377.383.1	45
1.377.383.10	45
1.377.383.2	45
1.377.383.3	45
1.377.383.4	45
1.377.383.5	45
1.377.383.6	45
1.377.383.7	45
1.377.383.8	45
1.377.383.9	45
1.377.392	12, 47
1.377.393	12, 47
1.377.394	11A
1.377.395	11A
1.377.396	11A
1.377.397	11A
1.377.398	11A, 49
1.377.399	11A, 49
1.377.406	12
1.377.407	12
1.377.409	6, 7
1.377.410	6, 7
1.377.425	45
1.377.425.1	45
1.377.425.10	45
1.377.425.2	45
1.377.425.3	45
1.377.425.4	45
1.377.425.5	45
1.377.425.6	45
1.377.425.7	45
1.377.425.8	45
1.377.425.9	45
1.377.426	45
1.377.426.1	45
1.377.426.10	45
1.377.426.2	45

Part number	Page number
1.377.426.3	45
1.377.426.4	45
1.377.426.5	45
1.377.426.6	45
1.377.426.7	45
1.377.426.8	45
1.377.426.9	45
1.377.428	45
1.377.429	45
1.377.432	45
1.377.433	45
1.377.453	6, 7, 8, 9, 10
1.377.454	6, 7, 8, 9, 10
1.377.460	6, 7
1.377.461	6, 7
1.377.462	21A, 23A
1.377.465	21A, 21C, 23A
1.377.466	21A, 21C, 23A
1.377.470	6, 7
1.377.478	6, 7
1.377.479	6, 7
1.377.488	7
1.377.489	7
1.377.503	9
1.377.504	9
1.377.508	15A, 15B
1.377.515	17A
1.377.516	17A
1.377.517	17A
1.377.530	65
1.377.533	21A
1.377.533.1	21A
1.377.533.10	21A
1.377.533.2	21A
1.377.533.3	21A
1.377.533.4	21A
1.377.533.5	21A
1.377.533.6	21A
1.377.533.7	21A
1.377.533.8	21A
1.377.533.9	21A
1.377.534	23A
1.377.534.1	23A
1.377.534.10	23A
1.377.534.2	23A
1.377.534.3	23A
1.377.534.4	23A
1.377.534.5	23A

Part number	Page number
1.377.534.6	23A
1.377.534.7	23A
1.377.534.8	23A
1.377.534.9	23A
1.377.535	55
1.377.535.1	55
1.377.535.10	55
1.377.535.2	55
1.377.535.3	55
1.377.535.5	55
1.377.535.6	55
1.377.535.7	55
1.377.535.8	55
1.377.535.9	55
1.377.536	55
1.377.536.1	55
1.377.536.10	55
1.377.536.2	55
1.377.536.3	55
1.377.536.5	55
1.377.536.6	55
1.377.536.7	55
1.377.536.8	55
1.377.536.9	55
1.377.544	6
1.377.558	16A
1.377.559	16A
1.377.563	65
1.377.583	8, 9, 10
1.377.593	24A
1.377.595	7
1.377.596	7
1.377.626	7
1.377.627	7
1.377.676	15A, 15B
1.377.687	8, 9, 10
1.377.688	17A
1.377.689	17A
1.377.699	43A, 43B
1.377.700	17A
1.377.701	17A
1.377.722	5A, 48
1.377.725	8, 9, 10
1.377.726	8, 9, 10
1.377.729	11A
1.377.730	11A
1.377.731	5A, 48
1.377.732	5A, 48

Part number	Page number
1.377.733	5A, 48
1.377.734	5A, 48
1.377.735	12
1.377.738	21A
1.377.741	21A, 21C, 23A
1.377.744	21A, 21C, 23A
1.377.747	21A, 21C, 23A
1.377.748	21A, 21C, 23A
1.377.751	21A, 21C, 23A, 23B
1.377.754	11A, 49
1.377.762	11A, 13A, 49
1.377.763	13A
1.377.766	13A
1.377.767	13A
1.377.769	13A
1.377.770	13A
1.377.775	5A, 48
1.377.776	13A
1.377.777	13A
1.377.778	13A
1.377.779	13A
1.377.780	13A
1.377.781	13A
1.377.782	13A
1.377.783	13A
1.377.787	13A
1.377.788	11A, 49
1.377.791	11A, 49
1.377.793	11A, 49
1.377.799	13A
1.377.800	47
1.377.801	47
1.377.802	47, 49
1.377.803	47, 49
1.377.804	15A, 15B, 15C
1.377.805	15A, 15B, 15C
1.377.806	15A, 15B, 15C
1.377.807	15A, 15B, 15C
1.377.808	15A, 15B, 15C
1.377.809	14A, 14B, 15A, 15B, 15C
1.377.810	14A, 15A, 15C
1.377.811	14B, 15A
1.377.812	15A, 15B
1.377.813	14A, 15A
1.377.814	49
1.377.815	49
1.377.816	48, 49
1.377.817	48, 49

Part number	Page number
1.377.834	18A
1.377.837	18A
1.377.839	18A
1.377.842	19A
1.377.843	19A
1.377.844	19A
1.377.845	19A
1.377.846	19A
1.377.847	19A
1.377.852	19A
1.377.853	19A
1.377.855	21A
1.377.861	18A
1.377.862	21A, 21B, 21C, 23A, 23B
1.377.864	16A, 17A
1.377.865	16A, 17A
1.377.866	16A, 17A
1.377.867	16A
1.377.868	16A
1.377.869	16A
1.377.870	16A
1.377.871	16A
1.377.872	16A
1.377.873	16A
1.377.874	16A
1.377.875	16A
1.377.876	16A
1.377.877	16A
1.377.878	16A
1.377.879	16A
1.377.880	16A
1.377.881	17A
1.377.882	17A
1.377.883	17A
1.377.884	17A
1.377.885	17A
1.377.886	17A
1.377.891	17A
1.377.892	17A
1.377.902	21A, 21B, 21C, 22A, 23A, 23B
1.377.905	7
1.377.960	22A
1.377.961	22A
1.377.967	22A
1.377.968	22A
1.377.969	22A
1.377.970	22A
1.377.975	22A, 23A, 23B

Part number	Page number
1.377.976	22A, 23A, 23B
1.377.983	11A, 49
1.377.984	11A, 49
1.377.986	13A
1.377.989	11A, 49
1.377.990	11A, 49
1.377.991	7
1.377.992	7
1.378.048	23A
1.378.049	23A
1.378.053	21A, 21C, 23A
1.378.056	23A
1.378.057	23A
1.378.060	16A
1.378.065	22A
1.378.065.1	22A
1.378.065.10	22A
1.378.065.2	22A
1.378.065.3	22A
1.378.065.4	22A
1.378.065.5	22A
1.378.065.6	22A
1.378.065.7	22A
1.378.065.8	22A
1.378.065.9	22A
1.378.066	22A
1.378.066.1	22A
1.378.066.10	22A
1.378.066.2	22A
1.378.066.3	22A
1.378.066.4	22A
1.378.066.5	22A
1.378.066.6	22A
1.378.066.7	22A
1.378.066.8	22A
1.378.066.9	22A
1.378.076	7
1.378.098	7
1.378.100	7
1.378.105	7
1.378.106	7
1.378.126	7
1.378.128	2, 2A, 2B
1.378.129	2, 2A, 2B
1.378.136	2
1.378.137	2
1.378.140	2, 2A, 2B
1.378.141	2, 2A, 2B

Part number	Page number
1.378.144	2, 2A, 2B
1.378.145	2, 2A, 2B
1.378.148	2, 2A
1.378.149	2, 2A
1.378.150	2
1.378.151	2
1.378.154	2, 2A
1.378.155	2, 2A
1.378.156	2
1.378.157	2
1.378.164	2
1.378.165	2
1.378.166	2
1.378.167	2
1.378.168	2, 2A
1.378.169	2, 2A
1.378.170	2
1.378.171	2
1.378.173	7
1.378.178	11A, 49
1.378.179	7
1.378.199	7
1.378.224	17A
1.378.225	17A
1.378.226	7
1.378.227	7
1.378.259	21C
1.378.269	21A
1.378.282	7
1.378.286	7
1.378.287	7
1.378.292	20
1.378.293	20
1.378.296	16A, 17A
1.378.297	16A, 17A
1.378.298	16A, 17A
1.378.299	16A
1.378.300	16A
1.378.301	16A
1.378.302	16A
1.378.303	16A
1.378.304	16A
1.378.305	16A
1.378.306	16A
1.378.307	16A
1.378.308	16A
1.378.309	16A
1.378.310	16A

Part number	Page number
1.378.311	17A
1.378.312	17A
1.378.313	17A
1.378.314	17A
1.378.315	17A
1.378.316	17A
1.378.317	17A
1.378.318	17A
1.378.319	17A
1.378.320	17A
1.378.321	17A
1.378.322	17A
1.378.323	17A
1.378.324	17A
1.378.325	17A
1.378.326	17A
1.378.327	17A
1.378.328	17A
1.378.334	17A
1.378.335	17A
1.378.336	17A
1.378.337	17A
1.378.338	17A
1.378.339	17A
1.378.340	16A, 17A
1.378.341	16A, 17A
1.378.342	17A
1.378.343	17A
1.378.344	13A
1.378.345	17A
1.378.346	17A
1.378.347	13A
1.378.348	17A
1.378.349	17A
1.378.350	17A
1.378.351	17A
1.378.353	17A
1.378.354	17A
1.378.355	17A
1.378.356	17A
1.378.360	16A
1.378.361	16A
1.378.372	24A
1.378.373	24A
1.378.374	24A
1.378.376	24A
1.378.377	24A
1.378.378	24A

Part number	Page number
1.378.379	24A
1.378.380	24A
1.378.381	24A
1.378.382	24A
1.378.389	7
1.378.390	20
1.378.391	20
1.378.398	15A
1.378.399	14B, 15A
1.378.400	14A, 15A
1.378.403	7
1.378.407	7
1.378.409	7
1.378.410	7
1.378.411	7
1.378.415	7, 24A, 24A2
1.378.428	12
1.378.429	12
1.378.430	12
1.378.440	47
1.378.441	47
1.378.443	6
1.378.444	6
1.378.446	6, 7, 43A, 43B
1.378.448	8, 9, 10
1.378.449	8, 9, 10
1.378.453	8, 9, 10
1.378.472	11A, 49
1.378.474	11A, 49
1.378.475	7
1.378.493	43A
1.378.497	43A, 43B
1.378.501	43A, 43B
1.378.502	4
1.378.503	4
1.378.507	5A, 48
1.378.521	8, 9, 10
1.378.522	24A, 24A1, 24A2, 24A3, 24A4
1.378.523	8, 9, 10
1.378.524	8, 9, 10
1.378.526	24A, 24A1, 24A2, 24A3, 24A4
1.378.528	28
1.378.530	24A
1.378.531	6
1.378.532	6
1.378.533	6
1.378.534	6

Part number	Page number
1.378.574	21A, 23A
1.378.575	21A, 23A, 23B
1.378.576	21A
1.378.577	21A
1.378.578	21A, 23B
1.378.579	21A
1.378.582	21A
1.378.612	24A, 24A1, 24A2, 24A3
1.378.613	24A, 24A1
1.378.614	24A, 24A1
1.378.615	24A
1.378.616	24A, 24A1
1.378.617	24A
1.378.618	24A
1.378.619	24A, 24A1, 24A3, 24A4
1.378.632	24A
1.378.637	24A, 24B
1.378.638	24A, 24B
1.378.639	24A, 24A2
1.378.641	24A
1.378.642	24A
1.378.643	24A
1.378.644	24A
1.378.645	24A
1.378.646	24A
1.378.647	24A
1.378.648	24A
1.378.679	7
1.378.685	6, 7
1.378.689	6, 7
1.378.690	6, 7
1.378.696	24A, 24A1, 24A2, 24A3, 24A4, 24B
1.378.697	13A
1.378.751	16A
1.378.752	16A
1.378.760	2, 2A, 2B
1.378.764	16A
1.378.765	16A
1.378.791	16A
1.378.792	16A
1.378.793	16A
1.378.795	16A
1.378.796	16A
1.378.797	16A
1.378.798	16A
1.378.799	16A
1.378.800	16A
1.378.801	16A
1.378.802	16A
1.378.803	16A
1.378.804	16A
1.378.805	16A
1.378.806	16A
1.378.807	16A
1.378.808	55
1.378.809	55
1.378.822	55
1.378.825	55
1.378.830	55
1.378.831	55
1.378.835	55
1.378.836	24A, 24A1, 24A2, 24A3
1.378.837	24A, 24A1, 24A2, 24A3, 24A4
1.378.838	49
1.378.839	49
1.378.840	48
1.378.841	48
1.378.842	24A
1.378.843	24A
1.378.844	24A, 24A1, 24A2, 24A3
1.378.845	24A
1.378.846	24A
1.378.851	54
1.378.852	54
1.378.853	54
1.378.854	24A
1.378.855	54
1.378.856	54
1.378.857	24A
1.378.858	55, 56, 56A
1.378.859	55, 56, 56A
1.378.860	55, 56, 56A
1.378.861	55, 56, 56A
1.378.866	6
1.378.896	15A
1.378.897	15A
1.378.900	6
1.378.963	16A
1.378.964	16A, 16B
1.378.969	16A, 16B
1.378.970	16A, 16B
1.378.971	16A
1.378.972	16A, 16B
1.378.973	16A, 16B, 17A
1.378.974	16A, 16B, 17A
1.378.975	16A, 16B

Part number	Page number
1.378.976	16A
1.378.977	16A, 16B
1.378.978	16A, 16B
1.378.979	16A, 16B
1.378.980	16A
1.378.985	2, 2A, 2B
1.378.987	2, 2A
1.378.988	6
1.378.989	6
1.378.997	2, 2A, 2B
1.378.999	2, 2A
1.379.034	16B
1.379.035	16B
1.379.036	16B
1.379.037	16B
1.379.038	16B
1.379.041	16B
1.379.042	16B
1.379.043	16B
1.379.060	2A, 2B
1.379.061	2
1.379.062	2, 2A, 2B
1.379.063	2, 2A
1.379.064	2, 2A
1.379.065	24A2, 24A3, 24B
1.379.066	24A2, 24A3, 24B
1.379.067	24A2, 24A3, 24B
1.379.071	14A
1.379.075	49
1.379.080	4
1.379.081	4
1.379.082	4
1.379.084	8
1.379.087	8
1.379.096	14B
1.379.099	16A, 16B, 17A
1.379.140	54
1.379.141	7
1.379.142	31
1.379.143	31
1.379.146	2, 2A, 2B
1.379.151	21A, 23A, 23B
1.379.152	21A, 23A, 23B
1.379.153	4
1.379.155	6
1.379.156	6
1.379.157	6
1.379.158	6

Part number	Page number
1.379.159	6
1.379.246	6, 7
1.379.292	56, 56A
1.379.298	13A
1.379.299	7
1.379.304	42
1.379.306	54
1.379.307	25B
1.379.308	25B
1.379.322	25B
1.379.323	25B
1.379.332	42
1.379.391	2, 2A, 2B
1.379.392	2, 2A, 2B
1.379.394	29A, 29B, 29C, 58A, 58B, 59, 60, 63
1.379.396	2, 2A, 2B
1.379.397	2, 2A, 2B
1.379.398	29A, 29B
1.379.399	29A, 29B
1.379.419	15C
1.379.421	16A
1.379.422	16A
1.379.423	16A
1.379.424	16A
1.379.425	44
1.379.440	6, 7
1.379.443	58A
1.379.456	24A, 24A1, 24A2, 24A3, 24A4
1.379.457	24A, 24A1, 24A2, 24A3, 24A4
1.379.458	24A, 24A1, 24A2, 24A3, 24A4, 24B
1.379.464	54
1.379.465	13A
1.379.472	29A, 29B, 29C, 58A, 58B, 59, 60, 63
1.379.473	29B
1.379.474	29A
1.379.475	58A
1.379.476	8, 9, 10
1.379.477	24A, 24A1, 24A2, 24A3, 24A4, 61A
1.379.479	42
1.379.480	42
1.379.481	42
1.379.482	42
1.379.485	8, 10
1.379.487	8, 10

Part number	Page number
1.379.488	8, 10
1.379.489	21B
1.379.490	21B
1.379.494	21B
1.379.495	21B
1.379.496	21B
1.379.499	21A, 21B, 23B
1.379.500	21B
1.379.500.1	21B
1.379.500.10	21B
1.379.500.2	21B
1.379.500.3	21B
1.379.500.4	21B
1.379.500.5	21B
1.379.500.6	21B
1.379.500.7	21B
1.379.500.8	21B
1.379.500.9	21B
1.379.501	21B
1.379.501.1	21B
1.379.501.10	21B
1.379.501.2	21B
1.379.501.3	21B
1.379.501.4	21B
1.379.501.5	21B
1.379.501.6	21B
1.379.501.7	21B
1.379.501.8	21B
1.379.501.9	21B
1.379.502	21B
1.379.502.1	21B
1.379.502.10	21B
1.379.502.2	21B
1.379.502.3	21B
1.379.502.4	21B
1.379.502.5	21B
1.379.502.6	21B
1.379.502.7	21B
1.379.502.8	21B
1.379.502.9	21B
1.379.503	21B
1.379.503.1	21B
1.379.503.10	21B
1.379.503.2	21B
1.379.503.3	21B
1.379.503.4	21B
1.379.503.5	21B
1.379.503.6	21B

Part number	Page number
1.379.503.7	21B
1.379.503.8	21B
1.379.503.9	21B
1.379.507	23A
1.379.507.1	23A
1.379.507.10	23A
1.379.507.2	23A
1.379.507.3	23A
1.379.507.4	23A
1.379.507.5	23A
1.379.507.6	23A
1.379.507.7	23A
1.379.507.8	23A
1.379.507.9	23A
1.379.508	21A
1.379.508.1	21A
1.379.508.10	21A
1.379.508.2	21A
1.379.508.3	21A
1.379.508.4	21A
1.379.508.5	21A
1.379.508.6	21A
1.379.508.7	21A
1.379.508.8	21A
1.379.508.9	21A
1.379.509	21A, 23A
1.379.509.1	21A, 23A
1.379.509.10	21A, 23A
1.379.509.2	21A, 23A
1.379.509.3	21A, 23A
1.379.509.4	21A, 23A
1.379.509.5	21A, 23A
1.379.509.6	21A, 23A
1.379.509.7	21A, 23A
1.379.509.8	21A, 23A
1.379.509.9	21A, 23A
1.379.510	21B
1.379.513	21B
1.379.516	21B
1.379.523	56
1.379.524	56, 56A
1.379.525	56, 56A
1.379.526	56
1.379.527	56
1.379.528	56, 56A
1.379.529	56
1.379.530	56, 56A
1.379.531	56, 56A

Part number	Page number
1.379.532	56
1.379.534	16A, 16B, 17A
1.379.535	16B, 17A
1.379.536	35, 42
1.379.537	56, 56A
1.379.538	56
1.379.539	56
1.379.540	29B
1.379.541	56A
1.379.542	56
1.379.543	8, 10
1.379.545	56
1.379.550	8, 10
1.379.551	56, 56A
1.379.552	56, 56A
1.379.553	56, 56A
1.379.554	56
1.379.555	56
1.379.556	56
1.379.560	8, 10
1.379.561	8, 10
1.379.562	56
1.379.563	56
1.379.564	56
1.379.565	56
1.379.566	56
1.379.567	56
1.379.568	56, 56A
1.379.569	56, 56A
1.379.570	56, 56A
1.379.571	56
1.379.572	56, 56A
1.379.573	56, 56A
1.379.574	56
1.379.575	56
1.379.576	56
1.379.586	14B
1.379.587	14A, 14B
1.379.588	14B, 15A, 15B
1.379.589	14B
1.379.590	16B
1.379.591	16B
1.379.592	16B
1.379.593	16B
1.379.594	16B
1.379.595	16B
1.379.596	16B
1.379.597	16B

Part number	Page number
1.379.598	16B
1.379.599	16B
1.379.600	6
1.379.624	19A
1.379.625	19A
1.379.629	8, 10
1.379.630	56, 56A
1.379.631	25A
1.379.632	25A
1.379.634	2
1.379.635	26, 27
1.379.636	8
1.379.637	8
1.379.642	8, 9, 10
1.379.643	58B, 59, 60
1.379.644	16B
1.379.645	16B
1.379.646	16B
1.379.647	16B
1.379.648	16B
1.379.649	16B
1.379.650	6
1.379.668	19A
1.379.669	19A
1.379.674	8
1.379.678	24B
1.379.679	24B
1.379.680	56, 56A
1.379.681	56, 56A
1.379.682	56, 56A
1.379.683	56, 56A
1.379.684	56, 56A
1.379.686	13A
1.379.687	13A
1.379.701	21B
1.379.702	21B
1.379.704	21B
1.379.706	14A
1.379.707	13A, 49
1.379.708	16A, 17A
1.379.709	48
1.379.710	48
1.379.711	49
1.379.712	49
1.379.727	54
1.379.733	54
1.379.736	54
1.379.737	54

Part number	Page number
1.379.738	54
1.379.747	54
1.379.748	16A
1.379.749	16A
1.379.750	16A
1.379.751	16A
1.379.755	56
1.379.756	56
1.379.757	56, 56A
1.379.758	56
1.379.759	56
1.379.760	56
1.379.761	56
1.379.762	56
1.379.763	56, 56A
1.379.776	24A, 24A1, 24A2, 24A3, 24A4, 24B
1.379.779	47
1.379.780	47
1.379.790	57
1.379.791	57
1.379.792	57
1.379.795	57
1.379.796	57
1.379.799	57
1.379.805	57
1.379.809	57
1.379.813	57
1.379.814	57
1.379.824	57
1.379.829	57
1.379.830	57
1.379.887	21B
1.379.889	21B
1.379.913	21A, 22A, 23A
1.379.914	21A, 22A, 23A, 23B, 33
1.379.955	7
1.379.956	7
1.379.957	7
1.379.958	7
1.379.963	19A
1.379.973	47
1.379.974	47
2.401.765	40
2.403.473	4
2.405.227	4
213.607.0	28
234.364.0	51
237.816.0	55

Part number	Page number
514.038.0	31
610.097.1	60
616.068.0	8, 9, 10
665.840.0	8
668.800.0	28
668.818.0	28
673.749.0	64, 67
676.304	8, 10
683.721.1	28
683.722.1	28
683.725.0	28
71 38 50 03	37
714C1050060	18A
714D1050060	18A
809.124.0	44
905.875.0	28
967PSF30526	21A, 21B, 21C, 22A, 23A, 23B, 33, 34, 64
975PV615000	20
985AZ102725	20
993.454.0	21A, 21C, 23A, 23B, 33, 34
994.610.0	28
ALUBIA 00 EP	11A, 49
Loctite 243	7, 11A, 13A, 49
Loctite 5910	11A, 13A, 49
Loctite 603	13A

MacDon

MacDon Industries Ltd.
680 Moray Street
Winnipeg, Manitoba
Canada R3J 3S3
t. (204) 885-5590 f. (204) 832-7749

MacDon, Inc.
10708 N. Pomona Avenue
Kansas City, Missouri
United States 64153-1924
t. (816) 891-7313 f. (816) 891-7323

MacDon Australia Pty. Ltd.
A.C.N. 079 393 721
P.O. Box 103 Somerton, Victoria, Australia
Australia 3061
t.+61 3 8301 1911 f. +61 3 8301 1912

MacDon Brasil Agribusiness Ltda.
Rua Grã Nicco, 113, sala 404, B. 04
Mossunguê, Curitiba, Paraná
CEP 81200-200 Brasil
t. +55 (41) 2101-1713 f. +55 (41) 2101-1699

LLC MacDon Russia Ltd.
123317 Moscow, Russia
10 Presnenskaya nab, Block C
Floor 5, Office No. 534, Regus Business Centre
t. +7 495 775 6971 f. +7 495 967 7600

MacDon Europe GmbH
Hagenauer Strasse 59
65203 Wiesbaden
Germany

CUSTOMERS
MacDon.com

DEALERS
Portal.MacDon.com

Trademarks of products are the marks of their respective manufacturers and/or distributors.

Printed in Canada